START

Title: OFFICIAL GAZETTE OF THE UNITED STATES PATENT AND TRADEMARK OFFICE. PATENTS.

Volume: 1205

Issues: 4-5

PATENT: 5,699,555 - 5,704,061

Date: DECEMBER 23 - DECEMBER 30 1997

UMI Number: 10426.00

Note:

REEL NO: 17

VOL
1205
ISS
4
DE
23
1997
UMI

Vol. 1205 Number 4

OFFICIAL GAZETTE
of the
UNITED STATES PATENT AND TRADEMARK OFFICE

PATENTS

ute to:

U.S.
DEPARTMENT
OF COMMERCE

Patent
and
Trademark
Office

OFFICIAL GAZETTE of the UNITED STATES PATENT AND TRADEMARK OFFICE

December 23, 1997 Volume 1205 Number 4

CONTENTS

The following are mailed under direction of the Superintendent of Documents, Government Printing Office, Washington, D.C., 20402, to whom all subscriptions should be made payable and all communications addressed. VISA or MasterCard may be used for telephone orders, (202)-512-1800.

THE OFFICIAL GAZETTE (PATENT SECTION), issued weekly. Stock No. 703-033-00000-8
THE OFFICIAL GAZETTE (TRADEMARK SECTION), issued weekly. Stock No. 703-034-00000-4
PATENT AND TRADEMARK OFFICE NOTICES, issued weekly. Stock No. 703-035-00000-1
GENERAL INFORMATION concerning PATENTS. Stock No. 003-004-00661-7

COPIES OF PATENTS are furnished by the Patent and Trademark Office at $3.00 each; PLANT PATENTS in color, $12.00 each; copies of TRADEMARKS at $3.00 each. Address orders to the Commissioner of Patents and Trademarks, Washington, D.C. 20231.

Printing authorized by Section 11(a)3 of Title 35, U.S.P.T.O.

For sale by the U.S. Government Printing Office
Superintendent of Documents, Mail Stop: SSOP; Washington, DC 20402-9328

Patent Cooperation Treaty (PCT) Information

For information concerning PCT member countries, see the notice appearing in the *Official Gazette* at 1200 O.G. 98, on July 29, 1997.

For use of the European Patent Office as an International Searching Authority for international applications filed in the United States Receiving Office, see the notice appearing in the *Official Gazette* at 1022 O.G. 52, on September 28, 1982.

For use of the European Patent Office as an International Preliminary Examining Authority for international applications filed in the United States Receiving Office, see the notices appearing in the *Official Gazette* at 1080 O.G. 2, on July 7, 1987, and at 1091 O.G. 2, on June 7, 1988. There is no longer a limit on the number of such international applications accepted for international preliminary examination by the European Patent Office; see the notice appearing at 1116 O.G. 32, on July 17, 1990.

The search fee of the European Patent Office was decreased, effective October 1, 1997, and was announced in the *Official Gazette* at 1202 O.G. 47, on September 16, 1997.

International fees were changed, effective on May 1, 1997, due to a change in the exchange rate of the U.S. dollar with regard to the Swiss franc, and were announced in the *Official Gazette* at 1197 O.G. 69, on April 22, 1997.

Certain domestic PCT fees and charges for International Search and Preliminary Examination were changed, effective October 1, 1997, and were announced in the *Official Gazette* at 1201 O.G. 63, on August 19, 1997.

The schedule of PCT fees (in U.S. dollars), effective October 1, 1997, is as follows:

International Application (PCT Chapter I) fees:	
Transmittal fee	240.00
Search Fee	
U.S. Patent and Trademark Office (USPTO) as International Searching Authority (ISA)	
— No corresponding prior U.S. national application filed under 35 U.S.C. 111(a)	700.00
— Corresponding prior U.S. national application filed under 35 U.S.C. 111(a)	450.00
— Supplemental search fee, per additional invention (payable only upon invitation)	210.00
European Patent Office as ISA	1180.00
International fees	
Basic fee	530.00
Basic supplemental fee (for each page over 30)	10.00
Designation fee per country or region	
— For the first 11 national or regional offices designated	128.00
— For each designation in excess of 11 offices	No Charge
Precautionary designation fee and confirmation fee for each precautionary designation confirmed (PCT Rule 15.5)	
— Designation fee	128.00
— Confirmation fee	64.00
International Application (PCT Chapter II) fees associated with filing a Demand for Preliminary Examination:	
Handling fee	162.00
Preliminary examination fee	
USPTO as International Preliminary Examining Authority (IPEA)	
— USPTO was ISA in PCT Chapter I	490.00
— Additional examination fee, per additional invention (payable only upon invitation)	140.00
— USPTO was not ISA in PCT Chapter I	750.00
— Additional examination fee, per additional invention (payable only upon invitation)	270.00

U.S. National Stage Fees	Small Entity	Regular
Basic National fee		
USPTO was IPEA		
— All claims presented satisfied provisions of PCT Article 33(2) to (4)	49.00	98.00
— All claims presented did not satisfy provisions of PCT Article 33(2) to (4)	360.00	720.00
USPTO was ISA but not IPEA	395.00	790.00
USPTO was neither ISA nor IPEA		
— Search report has not been prepared by the European Patent Office or the Japanese Patent Office	535.00	1070.00
— Search report has been prepared by the European Patent Office or the Japanese Patent Office	465.00	930.00
Other National fees		
— For each independent claim in excess of 3	41.00	82.00
— For each claim in excess of 20	11.00	22.00
— For each application containing a multiple dependent claim	135.00	270.00
— Surcharge for filing oath or declaration after the time limit applicable under PCT Article 22 or 39(1)	65.00	130.00
— Processing fee for filing English translation after the time limit applicable under PCT Article 22 or 39(1)	130.00	130.00

Sept. 9, 1997

BRUCE A. LEHMAN
Assistant Secretary of Commerce and Commissioner of Patents and Trademarks

---

Notice of Maintenance Fees Payable

Title 37 Code of Federal Regulations (CFR), Section 1.362(d) provides that maintenance fees may be paid without surcharge for the six-month period beginning 3, 7, and 11 years after the date of issue of patents based on applications filed on or after Dec. 12, 1980. An additional six-month grace period is provided by 35 U.S.C. 41(b) and 37 CFR 1.362(e) for payment of the maintenance fee with the surcharge set forth in 37 CFR 1.20(h), as amended effective Dec. 16, 1991. If the maintenance fee is not paid in the patent requiring such payment the patent will expire on the 4th, 8th, or 12th anniversary of the grant.

Attention is drawn to the patents which were issued on December 22, 1994 for which maintenance fees due at 3 years and six months may now be paid. The patents have patent numbers within the following ranges:

Utility Patents 5,373,582 through 5,375,260

Reissue Patents based on the above identified patents.

Attention is drawn to the patents which were issued on December 18, 1990 for which maintenance fees due at 7 years and six months may now be paid. The patents have patent numbers within the following ranges:

Utility Patents 4,977,621 through 4,979,235
Reissue Patents based on the above identified patents.

Attention is drawn to the patents which were issued on December 16, 1986 for which maintenance fees due at 11 years and six months may now be paid. The patents have patent numbers within the following ranges:

Utility Patents 4,628,543 through 4,630,316
Reissue Patents based on the above identified patents.

No maintenance fees are required for design or plant patents.

Payments of maintenance fees in patents should be directed to "Commissioner of Patents and Trademarks, Box M. Fee, Washington, D.C. 20231."

For patents based on applications filed on or after Dec. 12, 1980, but before Aug. 27, 1982, patent owners must establish small entity status according to 37 CFR 1.27 if they have not done so and if they wish to pay the small entity amount.

The current amounts of the maintenance fees due at 3 years and six months, 7 years and six months, and 11 years and six months are set forth in 37 CFR 1.20(e)-(g), as amended Oct. 1, 1997, which are reproduced below:

37 CFR § 1.20 Post-issuance fees

(e) For maintaining an original or reissue patent, except a design or plant patent, based on an application filed on or after Dec. 12, 1980, in force beyond 4 years; the fee is due by three years and six months after the original grant:

By a small entity (§ 1.9(f)) $525.00
By other than a small entity $1,050.00

(f) For maintaining an original or reissue patent, except a design or plant patent, based on an application filed on or after Dec. 12, 1980 in force beyond 8 years; the fee is due by seven years and six months after the original grant:

By a small entity (§ 1.9(f)) $1,050.00
By other than a small entity $2,100.00

(g) For maintaining an original or reissue patent, except a design or plant patent, based on applications filed on or after Dec. 12, 1980 in force beyond 12 years; the fee is due by eleven years and six months after the original grant:

By a small entity (§ 1.9(f)) $1,580.00
By other than a small entity $3,160.00

The amount of the surcharge for paying the maintenance fee during the grace period or after expiration of the patent are set forth in 37 CFR 1.20(h), and (i) which are reproduced below:

(h) Surcharge for paying a maintenance fee during the 6 month grace period following the expiration of three years and six months, seven years and six months, and eleven years and six months after the date of the original grant of a patent based on an application filed on or after Dec. 12, 1980:

By a small entity (§ 1.9(f)) $65.00
By other than a small entity $130.00

(i) Surcharge for accepting a maintenance fee after expiration of a patent for non-timely payment of a maintenance fee where the delay is shown to the satisfaction of the Commissioner to have been:

(1) unavoidable $700.00
(2) unintentional $1,640.00

Notice of Expiration of Patents Due to Failure to Pay Maintenance Fee

35 U.S.C. 41 and 37 CFR 1.362(g) provide that if the required maintenance fee and any applicable surcharge are not paid in a patent requiring such payment, the patent will expire at the end of the 4th, 8th or 12th anniversary of the grant of the patent depending on the first maintenance fee which was not paid.

According to the records of the Office, the patents listed below have expired due to failure to pay the required maintenance fee and any applicable surcharge.

PATENTS WHICH EXPIRED October 15, 1997
DUE TO FAILURE TO PAY MAINTENANCE FEES

Patent Number	Serial Number	Issue Date
Re. 32,647	06/935,233	04/19/88
(4,546,969)	(06/541,342)	(10/15/85)
Re. 33,591	07/405,092	05/21/91
(4,547,240)	(06/502,615)	(10/15/85)
Re. 34,334	07/771,342	08/03/93
(4,872,399)	(07/232,340)	(10/10/89)
4,546,494	06/663,764	10/15/85
4,546,497	06/537,400	10/15/85
4,546,503	06/710,728	10/15/85
4,546,512	06/555,907	10/15/85
4,546,532	06/516,559	10/15/85
4,546,533	06/415,518	10/15/85
4,546,535	06/560,624	10/15/85
4,546,537	06/578,592	10/15/85
4,546,538	06/647,827	10/15/85
4,546,540	06/531,709	10/15/85
4,546,548	06/559,627	10/15/85
4,546,550	06/541,052	10/15/85
4,546,556	06/571,498	10/15/85
4,546,558	06/558,359	10/15/85
4,546,560	06/663,332	10/15/85
4,546,561	06/560,384	10/15/85
4,546,568	06/436,807	10/15/85
4,546,572	06/603,727	10/15/85
4,546,573	06/631,228	10/15/85
4,546,577	06/500,353	10/15/85
4,546,580	06/512,966	10/15/85
4,546,581	06/640,152	10/15/85
4,546,583	06/558,377	10/15/85
4,546,588	06/477,029	10/15/85
4,546,594	06/565,357	10/15/85
4,546,597	06/539,106	10/15/85
4,546,603	06/618,553	10/15/85
4,546,604	06/666,234	10/15/85
4,546,616	06/583,516	10/15/85
4,546,630	06/525,674	10/15/85
4,546,633	06/655,364	10/15/85
4,546,638	06/433,843	10/15/85
4,546,641	06/542,836	10/15/85
4,546,643	06/577,629	10/15/85
4,546,644	06/569,121	10/15/85
4,546,645	06/496,625	10/15/85
4,546,648	06/542,070	10/15/85
4,546,660	06/553,136	10/15/85
4,546,661	06/569,112	10/15/85
4,546,662	06/609,708	10/15/85
4,546,663	06/506,313	10/15/85
4,546,665	06/549,883	10/15/85
4,546,670	06/462,008	10/15/85
4,546,674	06/476,982	10/15/85
4,546,677	06/633,351	10/15/85
4,546,678	06/567,013	10/15/85
4,546,681	06/441,702	10/15/85
4,546,682	06/649,077	10/15/85
4,546,683	06/576,527	10/15/85
4,546,685	06/574,663	10/15/85
4,546,692	06/537,444	10/15/85
4,546,699	06/626,517	10/15/85
4,546,702	06/595,107	10/15/85
4,546,704	06/542,441	10/15/85

Patent Number	Serial Number	Issue Date
4,546,713	06/692,909	10/15/85
4,546,716	06/635,714	10/15/85
4,546,728	06/571,932	10/15/85
4,546,729	06/616,306	10/15/85
4,546,734	06/609,115	10/15/85
4,546,742	06/573,190	10/15/85
4,546,752	06/550,568	10/15/85
4,546,766	06/585,542	10/15/85
4,546,772	06/520,958	10/15/85
4,546,780	06/536,499	10/15/85
4,546,784	06/626,020	10/15/85
4,546,786	06/475,984	10/15/85
4,546,787	06/390,546	10/15/85
4,546,790	06/482,837	10/15/85
4,546,791	06/591,239	10/15/85
4,546,796	06/506,252	10/15/85
4,546,819	06/579,170	10/15/85
4,546,820	06/481,189	10/15/85
4,546,829	06/700,068	10/15/85
4,546,839	06/616,802	10/15/85
4,546,840	06/494,017	10/15/85
4,546,843	06/528,365	10/15/85
4,546,847	06/355,302	10/15/85
4,546,852	06/577,676	10/15/85
4,546,857	06/572,454	10/15/85
4,546,860	06/582,974	10/15/85
4,546,861	06/492,608	10/15/85
4,546,863	06/448,029	10/15/85
4,546,865	06/380,287	10/15/85
4,546,869	06/464,930	10/15/85
4,546,895	06/616,567	10/15/85
4,546,900	06/619,793	10/15/85
4,546,904	06/420,330	10/15/85
4,546,906	06/544,718	10/15/85
4,546,920	06/544,398	10/15/85
4,546,921	06/456,077	10/15/85
4,546,930	06/618,194	10/15/85
4,546,931	06/621,794	10/15/85
4,546,932	06/561,885	10/15/85
4,546,933	06/670,358	10/15/85
4,546,935	06/508,877	10/15/85
4,546,945	06/373,304	10/15/85
4,546,950	06/384,004	10/15/85
4,546,958	06/610,188	10/15/85
4,546,964	06/460,268	10/15/85
4,546,968	06/428,365	10/15/85
4,546,977	06/620,520	10/15/85
4,546,978	06/625,739	10/15/85
4,546,979	06/598,341	10/15/85
4,546,982	06/595,705	10/15/85
4,546,984	06/461,545	10/15/85
4,546,987	06/665,858	10/15/85
4,546,990	06/529,590	10/15/85
4,547,000	06/456,014	10/15/85
4,547,004	06/448,434	10/15/85
4,547,007	06/441,009	10/15/85
4,547,015	06/438,738	10/15/85
4,547,018	06/671,577	10/15/85
4,547,020	06/492,970	10/15/85
4,547,021	06/544,287	10/15/85
4,547,026	06/630,992	10/15/85
4,547,027	06/582,101	10/15/85
4,547,028	06/539,121	10/15/85
4,547,030	06/441,527	10/15/85
4,547,031	06/625,996	10/15/85
4,547,033	06/649,133	10/15/85
4,547,043	06/341,976	10/15/85
4,547,045	06/588,808	10/15/85
4,547,047	06/361,254	10/15/85
4,547,061	06/348,769	10/15/85
4,547,083	06/670,576	10/15/85
4,547,107	06/590,210	10/15/85
4,547,122	06/541,937	10/15/85
4,547,125	06/561,949	10/15/85
4,547,127	06/544,563	10/15/85
4,547,129	06/567,787	10/15/85
4,547,142	06/336,119	10/15/85
4,547,148	06/666,043	10/15/85
4,547,151	06/585,199	10/15/85
4,547,156	06/580,551	10/15/85
4,547,165	06/460,093	10/15/85
4,547,167	06/460,170	10/15/85
4,547,180	06/411,020	10/15/85
4,547,183	06/442,611	10/15/85
4,547,184	06/503,424	10/15/85
4,547,188	06/551,058	10/15/85
4,547,205	06/659,924	10/15/85
4,547,206	06/506,727	10/15/85
4,547,211	06/652,144	10/15/85
4,547,219	06/646,482	10/15/85
4,547,220	06/603,392	10/15/85
4,547,226	06/531,338	10/15/85
4,547,231	06/625,783	10/15/85
4,547,232	06/653,995	10/15/85
4,547,233	06/610,089	10/15/85
4,547,234	06/627,781	10/15/85
4,547,238	06/579,245	10/15/85
4,547,249	06/593,044	10/15/85
4,547,252	06/591,462	10/15/85
4,547,262	06/646,338	10/15/85
4,547,265	06/499,942	10/15/85
4,547,280	06/674,693	10/15/85
4,547,282	06/605,690	10/15/85
4,547,292	06/547,274	10/15/85
4,547,293	06/645,657	10/15/85
4,547,295	06/559,202	10/15/85
4,547,296	06/532,493	10/15/85
4,547,297	06/577,662	10/15/85
4,547,304	06/645,589	10/15/85
4,547,316	06/618,824	10/15/85
4,547,318	06/604,100	10/15/85
4,547,319	06/541,644	10/15/85
4,547,321	06/518,362	10/15/85
4,547,331	06/595,056	10/15/85
4,547,336	06/455,481	10/15/85
4,547,338	06/681,730	10/15/85
4,547,339	06/547,120	10/15/85
4,547,341	06/559,326	10/15/85
4,547,346	06/627,565	10/15/85
4,547,350	06/465,051	10/15/85
4,547,352	06/524,399	10/15/85
4,547,355	06/624,818	10/15/85
4,547,360	06/661,867	10/15/85
4,547,361	06/578,942	10/15/85
4,547,370	06/556,148	10/15/85
4,547,371	06/485,978	10/15/85
4,547,375	06/486,634	10/15/85
4,547,376	06/556,850	10/15/85
4,547,377	06/476,154	10/15/85
4,547,389	06/554,680	10/15/85
4,547,392	06/586,654	10/15/85
4,547,393	06/618,803	10/15/85
4,547,398	06/549,633	10/15/85
4,547,399	06/620,513	10/15/85
4,547,401	06/602,980	10/15/85
4,547,406	06/476,120	10/15/85
4,547,407	06/540,303	10/15/85
4,547,409	06/657,062	10/15/85
4,547,425	06/514,795	10/15/85
4,547,429	06/648,123	10/15/85
4,547,432	06/636,511	10/15/85
4,547,435	06/601,282	10/15/85
4,547,436	06/604,587	10/15/85
4,547,454	06/650,713	10/15/85
4,547,455	06/505,206	10/15/85
4,547,456	06/537,063	10/15/85
4,547,462	06/523,438	10/15/85
4,547,466	06/499,957	10/15/85
4,547,467	06/506,813	10/15/85
4,547,469	06/498,171	10/15/85
4,547,479	06/626,944	10/15/85
4,547,485	06/654,901	10/15/85
4,547,487	06/495,968	10/15/85
4,547,490	06/512,917	10/15/85
4,547,491	06/632,094	10/15/85
4,547,492	06/639,392	10/15/85

Patent Number	Serial Number	Issue Date
4,547,495	06/628,730	10/15/85
4,547,496	06/623,084	10/15/85
4,547,507	06/512,964	10/15/85
4,547,513	06/679,466	10/15/85
4,547,521	06/553,470	10/15/85
4,547,526	06/611,714	10/15/85
4,547,528	06/686,315	10/15/85
4,547,529	06/715,604	10/15/85
4,547,533	06/625,036	10/15/85
4,547,534	06/637,390	10/15/85
4,547,535	06/430,158	10/15/85
4,547,537	06/637,240	10/15/85
4,547,538	06/664,901	10/15/85
4,547,541	06/528,383	10/15/85
4,547,542	06/564,719	10/15/85
4,547,543	06/669,374	10/15/85
4,547,550	06/669,169	10/15/85
4,547,553	06/725,515	10/15/85
4,547,556	06/436,258	10/15/85
4,547,562	06/593,591	10/15/85
4,547,564	06/599,661	10/15/85
4,547,567	06/631,999	10/15/85
4,547,568	06/605,370	10/15/85
4,547,573	06/557,585	10/15/85
4,547,578	06/583,230	10/15/85
4,547,584	06/566,648	10/15/85
4,547,595	06/600,437	10/15/85
4,547,602	06/645,137	10/15/85
4,547,605	06/536,469	10/15/85
4,547,607	06/600,878	10/15/85
4,547,608	06/600,924	10/15/85
4,547,610	06/669,551	10/15/85
4,547,612	06/654,348	10/15/85
4,547,615	06/618,922	10/15/85
4,547,619	06/685,665	10/15/85
4,547,622	06/604,922	10/15/85
4,547,630	06/558,061	10/15/85
4,547,632	06/597,238	10/15/85
4,547,636	06/527,659	10/15/85
4,547,638	06/493,922	10/15/85
4,547,640	06/428,237	10/15/85
4,547,651	06/375,093	10/15/85
4,547,658	06/620,360	10/15/85
4,547,662	06/475,801	10/15/85
4,547,665	06/453,488	10/15/85
4,547,666	06/459,285	10/15/85
4,547,668	06/531,984	10/15/85
4,547,677	06/505,280	10/15/85
4,547,682	06/546,223	10/15/85
4,547,684	06/525,286	10/15/85
4,547,688	06/607,854	10/15/85
4,547,690	06/580,315	10/15/85
4,547,695	06/471,588	10/15/85
4,547,696	06/572,088	10/15/85
4,547,699	06/453,379	10/15/85
4,547,705	06/461,518	10/15/85
4,547,710	06/461,076	10/15/85
4,547,713	06/439,553	10/15/85
4,547,719	06/460,982	10/15/85
4,547,722	06/482,494	10/15/85
4,547,730	06/590,973	10/15/85
4,547,732	06/479,047	10/15/85
4,547,733	06/332,119	10/15/85
4,547,748	06/639,755	10/15/85
4,547,754	06/557,953	10/15/85
4,547,757	06/456,073	10/15/85
4,547,759	06/603,466	10/15/85
4,547,764	06/547,382	10/15/85
4,547,769	06/437,678	10/15/85
4,547,774	06/650,126	10/15/85
4,547,779	06/465,486	10/15/85
4,547,781	06/488,205	10/15/85
4,547,793	06/565,678	10/15/85
4,547,797	06/433,934	10/15/85
4,547,805	06/505,576	10/15/85
4,547,812	06/333,385	10/15/85
4,547,814	06/438,026	10/15/85

Patent Number	Serial Number	Issue Date
4,547,824	06/450,622	10/15/85
4,547,832	06/586,013	10/15/85
4,547,840	06/656,840	10/15/85
4,547,850	06/549,806	10/15/85
4,547,852	06/465,618	10/15/85
4,547,855	06/414,204	10/15/85
4,547,868	06/634,900	10/15/85
4,547,872	06/401,016	10/15/85
4,547,873	06/645,434	10/15/85
4,547,886	06/507,902	10/15/85
4,547,890	06/424,938	10/15/85
4,547,894	06/547,753	10/15/85
4,547,897	06/462,744	10/15/85
4,872,215	07/158,857	10/10/89
4,872,219	07/189,384	10/10/89
4,872,222	07/225,461	10/10/89
4,872,226	07/202,532	10/10/89
4,872,227	07/141,081	10/10/89
4,872,231	07/222,688	10/10/89
4,872,235	07/152,106	10/10/89
4,872,238	07/098,952	10/10/89
4,872,246	07/296,289	10/10/89
4,872,253	07/105,339	10/10/89
4,872,254	07/319,986	10/10/89
4,872,266	07/146,314	10/10/89
4,872,268	07/186,094	10/10/89
4,872,271	07/255,849	10/10/89
4,872,278	07/186,222	10/10/89
4,872,285	07/201,226	10/10/89
4,872,286	07/196,249	10/10/89
4,872,309	07/280,869	10/10/89
4,872,315	07/148,709	10/10/89
4,872,316	07/151,071	10/10/89
4,872,325	07/064,214	10/10/89
4,872,328	06/916,911	10/10/89
4,872,329	07/082,845	10/10/89
4,872,334	07/287,692	10/10/89
4,872,335	06/922,694	10/10/89
4,872,336	07/253,781	10/10/89
4,872,338	07/251,987	10/10/89
4,872,342	07/223,680	10/10/89
4,872,344	07/153,270	10/10/89
4,872,346	07/214,847	10/10/89
4,872,354	07/079,366	10/10/89
4,872,363	07/004,098	10/10/89
4,872,379	07/000,485	10/10/89
4,872,383	07/293,526	10/10/89
4,872,384	07/149,837	10/10/89
4,872,388	07/089,505	10/10/89
4,872,389	07/294,871	10/10/89
4,872,390	07/241,021	10/10/89
4,872,398	07/244,034	10/10/89
4,872,400	07/282,620	10/10/89
4,872,402	07/216,410	10/10/89
4,872,405	07/289,939	10/10/89
4,872,410	07/136,117	10/10/89
4,872,411	07/262,491	10/10/89
4,872,412	07/182,435	10/10/89
4,872,423	07/171,598	10/10/89
4,872,426	07/181,867	10/10/89
4,872,431	07/186,841	10/10/89
4,872,436	07/247,408	10/10/89
4,872,437	07/212,622	10/10/89
4,872,446	07/245,240	10/10/89
4,872,447	07/166,678	10/10/89
4,872,457	07/184,138	10/10/89
4,872,461	07/200,551	10/10/89
4,872,465	07/281,743	10/10/89
4,872,470	07/166,899	10/10/89
4,872,471	07/247,205	10/10/89
4,872,472	06/282,131	10/10/89
4,872,482	07/211,487	10/10/89
4,872,484	07/283,507	10/10/89
4,872,487	07/157,382	10/10/89
4,872,488	07/238,124	10/10/89
4,872,492	07/180,086	10/10/89
4,872,496	07/063,578	10/10/89
4,872,502	07/100,895	10/10/89
4,872,503	06/839,207	10/10/89

Patent Number	Serial Number	Issue Date
4,872,511	07/040,393	10/10/89
4,872,512	07/200,664	10/10/89
4,872,513	07/298,834	10/10/89
4,872,517	07/153,136	10/10/89
4,872,518	07/230,523	10/10/89
4,872,519	07/148,024	10/10/89
4,872,525	07/271,101	10/10/89
4,872,534	07/260,577	10/10/89
4,872,536	07/100,103	10/10/89
4,872,542	07/132,446	10/10/89
4,872,546	07/136,535	10/10/89
4,872,557	06/696,529	10/10/89
4,872,559	07/198,119	10/10/89
4,872,569	07/052,167	10/10/89
4,872,581	07/123,334	10/10/89
4,872,582	07/196,053	10/10/89
4,872,589	07/182,338	10/10/89
4,872,590	06/892,465	10/10/89
4,872,593	07/142,882	10/10/89
4,872,595	07/249,956	10/10/89
4,872,598	07/192,769	10/10/89
4,872,601	07/093,344	10/10/89
4,872,602	07/159,313	10/10/89
4,872,611	07/256,121	10/10/89
4,872,612	07/076,953	10/10/89
4,872,622	07/256,516	10/10/89
4,872,624	07/198,446	10/10/89
4,872,629	07/242,557	10/10/89
4,872,632	07/250,773	10/10/89
4,872,637	07/202,876	10/10/89
4,872,641	07/223,161	10/10/89
4,872,642	07/240,831	10/10/89
4,872,644	07/110,746	10/10/89
4,872,647	07/102,036	10/10/89
4,872,649	07/159,062	10/10/89
4,872,657	07/107,337	10/10/89
4,872,661	06/612,158	10/10/89
4,872,671	07/227,804	10/10/89
4,872,673	07/200,077	10/10/89
4,872,674	07/145,547	10/10/89
4,872,675	07/015,641	10/10/89
4,872,676	07/171,845	10/10/89
4,872,677	07/174,408	10/10/89
4,872,678	07/255,593	10/10/89
4,872,681	07/277,754	10/10/89
4,872,685	07/270,508	10/10/89
4,872,688	07/315,644	10/10/89
4,872,689	07/041,144	10/10/89
4,872,691	07/226,325	10/10/89
4,872,692	07/202,720	10/10/89
4,872,698	07/151,277	10/10/89
4,872,700	07/234,747	10/10/89
4,872,705	07/229,687	10/10/89
4,872,706	07/166,754	10/10/89
4,872,713	07/148,732	10/10/89
4,872,715	07/247,491	10/10/89
4,872,725	07/085,401	10/10/89
4,872,727	07/253,601	10/10/89
4,872,731	06/920,268	10/10/89
4,872,738	06/830,461	10/10/89
4,872,745	07/156,839	10/10/89
4,872,746	07/145,032	10/10/89
4,872,752	07/100,287	10/10/89
4,872,765	06/487,560	10/10/89
4,872,767	06/719,606	10/10/89
4,872,778	07/120,992	10/10/89
4,872,783	07/207,236	10/10/89
4,872,785	07/146,860	10/10/89
4,872,795	07/243,332	10/10/89
4,872,797	07/278,498	10/10/89
4,872,802	07/067,931	10/10/89
4,872,804	07/089,561	10/10/89
4,872,827	07/136,914	10/10/89
4,872,831	07/156,436	10/10/89
4,872,835	06/889,548	10/10/89
4,872,837	07/151,537	10/10/89
4,872,838	07/067,306	10/10/89

Patent Number	Serial Number	Issue Date
4,872,847	07/162,517	10/10/89
4,872,875	07/296,428	10/10/89
4,872,882	07/239,520	10/10/89
4,872,896	07/199,954	10/10/89
4,872,900	07/159,991	10/10/89
4,872,905	07/192,555	10/10/89
4,872,909	07/229,408	10/10/89
4,872,911	07/184,199	10/10/89
4,872,912	07/119,863	10/10/89
4,872,915	07/022,617	10/10/89
4,872,930	07/147,034	10/10/89
4,872,935	07/276,888	10/10/89
4,872,941	07/118,601	10/10/89
4,872,943	07/207,259	10/10/89
4,872,949	07/298,380	10/10/89
4,872,955	07/182,887	10/10/89
4,872,956	07/291,628	10/10/89
4,872,959	07/102,681	10/10/89
4,872,961	07/090,498	10/10/89
4,872,962	07/134,924	10/10/89
4,872,963	07/193,560	10/10/89
4,872,967	07/197,233	10/10/89
4,872,974	07/291,395	10/10/89
4,872,985	06/928,996	10/10/89
4,872,986	07/191,073	10/10/89
4,872,989	07/026,079	10/10/89
4,872,991	07/214,981	10/10/89
4,872,992	07/130,831	10/10/89
4,872,994	07/174,459	10/10/89
4,873,001	07/207,843	10/10/89
4,873,002	06/443,896	10/10/89
4,873,008	07/273,709	10/10/89
4,873,012	07/153,538	10/10/89
4,873,017	07/119,690	10/10/89
4,873,019	07/135,103	10/10/89
4,873,023	07/273,973	10/10/89
4,873,027	07/245,940	10/10/89
4,873,032	07/182,839	10/10/89
4,873,033	07/209,839	10/10/89
4,873,035	07/125,505	10/10/89
4,873,036	07/159,323	10/10/89
4,873,037	07/253,458	10/10/89
4,873,045	07/172,407	10/10/89
4,873,051	07/178,723	10/10/89
4,873,057	07/027,001	10/10/89
4,873,070	07/096,473	10/10/89
4,873,073	07/319,756	10/10/89
4,873,089	07/171,197	10/10/89
4,873,092	07/053,072	10/10/89
4,873,096	07/235,059	10/10/89
4,873,098	07/108,466	10/10/89
4,873,099	07/131,919	10/10/89
4,873,100	07/038,794	10/10/89
4,873,102	07/167,723	10/10/89
4,873,105	07/210,319	10/10/89
4,873,113	07/151,564	10/10/89
4,873,115	06/765,573	10/10/89
4,873,118	07/273,453	10/10/89
4,873,123	07/102,447	10/10/89
4,873,127	07/211,084	10/10/89
4,873,130	07/235,389	10/10/89
4,873,133	06/905,995	10/10/89
4,873,136	07/207,462	10/10/89
4,873,143	07/246,959	10/10/89
4,873,145	06/935,182	10/10/89
4,873,155	07/268,921	10/10/89
4,873,168	07/164,653	10/10/89
4,873,176	07/090,753	10/10/89
4,873,186	07/092,321	10/10/89
4,873,189	06/570,155	10/10/89
4,873,193	07/089,586	10/10/89
4,873,199	07/249,205	10/10/89
4,873,201	07/131,416	10/10/89
4,873,209	07/208,255	10/10/89
4,873,210	07/127,846	10/10/89
4,873,211	07/193,863	10/10/89
4,873,213	07/231,564	10/10/89
4,873,223	06/838,996	10/10/89
4,873,235	06/473,792	10/10/89

Patent Number	Serial Number	Issue Date
4,873,239	07/189,919	10/10/89
4,873,240	07/216,872	10/10/89
4,873,242	07/197,102	10/10/89
4,873,243	06/923,901	10/10/89
4,873,247	07/126,061	10/10/89
4,873,258	07/234,186	10/10/89
4,873,265	07/218,956	10/10/89
4,873,268	06/917,887	10/10/89
4,873,270	07/153,889	10/10/89
4,873,278	06/930,518	10/10/89
4,873,279	06/944,036	10/10/89
4,873,283	07/194,017	10/10/89
4,873,293	07/321,149	10/10/89
4,873,298	07/182,730	10/10/89
4,873,312	06/727,147	10/10/89
4,873,317	07/022,225	10/10/89
4,873,320	07/133,009	10/10/89
4,873,324	07/307,135	10/10/89
4,873,326	07/231,232	10/10/89
4,873,327	07/165,528	10/10/89
4,873,330	07/153,780	10/10/89
4,873,334	07/099,907	10/10/89
4,873,336	07/183,559	10/10/89
4,873,348	06/834,333	10/10/89
4,873,351	07/280,851	10/10/89
4,873,355	07/056,181	10/10/89
4,873,358	07/246,609	10/10/89
4,873,360	07/146,716	10/10/89
4,873,364	07/283,430	10/10/89
4,873,376	07/209,200	10/10/89
4,873,381	07/199,811	10/10/89
4,873,383	07/150,400	10/10/89
4,873,384	07/338,538	10/10/89
4,873,385	07/197,543	10/10/89
4,873,388	07/084,809	10/10/89
4,873,389	07/228,147	10/10/89
4,873,392	07/185,911	10/10/89
4,873,396	07/184,411	10/10/89
4,873,397	07/138,237	10/10/89
4,873,401	07/246,588	10/10/89
4,873,408	07/138,139	10/10/89
4,873,412	06/943,114	10/10/89
4,873,414	07/206,125	10/10/89
4,873,423	07/184,224	10/10/89
4,873,426	07/227,826	10/10/89
4,873,430	07/262,558	10/10/89
4,873,434	07/075,508	10/10/89
4,873,436	07/046,562	10/10/89
4,873,444	07/276,188	10/10/89
4,873,451	07/136,276	10/10/89
4,873,453	07/238,447	10/10/89
4,873,460	07/271,644	10/10/89
4,873,462	07/245,787	10/10/89
4,873,463	07/052,045	10/10/89
4,873,469	07/107,002	10/10/89
4,873,470	07/199,987	10/10/89
4,873,471	07/106,180	10/10/89
4,873,473	07/149,624	10/10/89
4,873,478	07/282,902	10/10/89
4,873,482	07/225,412	10/10/89
4,873,486	07/241,635	10/10/89
4,873,493	07/158,919	10/10/89
4,873,496	07/281,289	10/10/89
4,873,498	07/292,037	10/10/89
4,873,501	06/881,419	10/10/89
4,873,511	07/187,146	10/10/89
4,873,518	06/890,042	10/10/89
4,873,521	07/101,184	10/10/89
4,873,522	07/046,136	10/10/89
4,873,523	07/106,723	10/10/89
4,873,534	07/090,586	10/10/89
4,873,540	07/202,591	10/10/89
4,873,552	07/151,520	10/10/89
4,873,555	07/058,972	10/10/89
4,873,559	07/253,779	10/10/89
4,873,567	07/084,968	10/10/89
4,873,573	07/127,664	10/10/89
4,873,575	07/312,320	10/10/89
4,873,576	07/227,390	10/10/89
4,873,584	07/215,345	10/10/89
4,873,586	07/190,807	10/10/89
4,873,595	06/767,090	10/10/89
4,873,599	07/192,416	10/10/89
4,873,600	07/104,106	10/10/89
4,873,602	07/120,079	10/10/89
4,873,603	07/314,160	10/10/89
4,873,611	07/347,061	10/10/89
4,873,614	07/202,455	10/10/89
4,873,620	06/550,616	10/10/89
4,873,621	07/084,870	10/10/89
4,873,625	07/121,465	10/10/89
4,873,632	07/057,967	10/10/89
4,873,634	07/030,793	10/10/89
4,873,653	07/243,150	10/10/89
4,873,657	07/120,458	10/10/89
4,873,668	07/086,295	10/10/89
4,873,693	07/277,883	10/10/89
4,873,695	07/224,626	10/10/89
4,873,699	07/170,232	10/10/89
4,873,701	07/097,448	10/10/89
4,873,705	07/148,901	10/10/89
4,873,707	07/095,191	10/10/89
4,873,709	07/220,087	10/10/89
4,873,710	07/144,469	10/10/89
4,873,711	06/947,155	10/10/89
4,873,712	07/196,954	10/10/89
4,873,715	07/059,514	10/10/89
4,873,719	07/272,829	10/10/89
5,251,342	07/789,069	10/12/93
5,251,345	07/836,223	10/12/93
5,251,350	07/929,002	10/12/93
5,251,351	07/773,665	10/12/93
5,251,352	07/868,879	10/12/93
5,251,355	07/958,799	10/12/93
5,251,361	07/688,161	10/12/93
5,251,364	07/895,687	10/12/93
5,251,375	07/848,813	10/12/93
5,251,377	08/040,111	10/12/93
5,251,379	07/981,550	10/12/93
5,251,380	07/930,717	10/12/93
5,251,385	07/729,593	10/12/93
5,251,388	08/044,884	10/12/93
5,251,390	07/991,357	10/12/93
5,251,391	07/828,042	10/12/93
5,251,392	07/652,779	10/12/93
5,251,393	07/804,438	10/12/93
5,251,398	07/557,924	10/12/93
5,251,405	07/734,964	10/12/93
5,251,406	07/768,885	10/12/93
5,251,409	07/898,497	10/12/93
5,251,412	07/820,249	10/12/93
5,251,419	07/950,325	10/12/93
5,251,420	07/909,390	10/12/93
5,251,428	07/793,553	10/12/93
5,251,436	07/907,466	10/12/93
5,251,448	07/848,922	10/12/93
5,251,449	07/929,180	10/12/93
5,251,453	07/947,667	10/12/93
5,251,460	07/966,516	10/12/93
5,251,463	07/944,763	10/12/93
5,251,464	07/940,069	10/12/93
5,251,465	07/895,035	10/12/93
5,251,466	08/016,526	10/12/93
5,251,470	07/832,801	10/12/93
5,251,472	07/912,499	10/12/93
5,251,473	07/587,019	10/12/93
5,251,485	07/695,819	10/12/93
5,251,487	07/776,845	10/12/93
5,251,492	07/842,446	10/12/93
5,251,495	07/826,340	10/12/93
5,251,496	07/695,685	10/12/93
5,251,497	07/786,839	10/12/93
5,251,505	07/805,769	10/12/93
5,251,515	08/013,247	10/12/93
5,251,517	07/969,475	10/12/93
5,251,519	08/035,162	10/12/93

Patent Number	Serial Number	Issue Date
5,251,522	07/970,385	10/12/93
5,251,523	07/856,529	10/12/93
5,251,526	07/917,368	10/12/93
5,251,537	07/913,603	10/12/93
5,251,547	07/783,791	10/12/93
5,251,550	06/900,986	10/12/93
5,251,552	07/896,996	10/12/93
5,251,565	07/855,822	10/12/93
5,251,571	07/755,042	10/12/93
5,251,573	07/941,718	10/12/93
5,251,585	08/012,001	10/12/93
5,251,591	07/927,744	10/12/93
5,251,596	07/636,101	10/12/93
5,251,601	07/920,855	10/12/93
5,251,606	07/757,815	10/12/93
5,251,619	07/802,359	10/12/93
5,251,620	07/849,710	10/12/93
5,251,622	07/971,281	10/12/93
5,251,627	07/722,036	10/12/93
5,251,634	07/695,543	10/12/93
5,251,655	07/913,882	10/12/93
5,251,670	07/721,085	10/12/93
5,251,677	07/937,931	10/12/93
5,251,683	07/667,922	10/12/93
5,251,687	08/000,528	10/12/93
5,251,691	07/820,626	10/12/93
5,251,696	07/863,838	10/12/93
5,251,704	07/830,322	10/12/93
5,251,706	07/984,967	10/12/93
5,251,713	07/410,172	10/12/93
5,251,716	07/767,464	10/12/93
5,251,727	07/882,990	10/12/93
5,251,729	07/811,428	10/12/93
5,251,731	07/924,283	10/12/93
5,251,740	07/964,888	10/12/93
5,251,750	07/872,124	10/12/93
5,251,754	07/981,085	10/12/93
5,251,779	07/657,339	10/12/93
5,251,781	07/952,697	10/12/93
5,251,784	07/829,077	10/12/93
5,251,791	07/659,289	10/12/93
5,251,795	07/807,174	10/12/93
5,251,798	07/984,842	10/12/93
5,251,799	07/984,843	10/12/93
5,251,807	07/908,457	10/12/93
5,251,810	07/839,836	10/12/93
5,251,818	07/902,593	10/12/93
5,251,819	07/845,389	10/12/93
5,251,820	07/932,420	10/12/93
5,251,828	07/967,455	10/12/93
5,251,830	07/795,186	10/12/93
5,251,832	07/842,911	10/12/93
5,251,834	07/886,847	10/12/93
5,251,846	07/825,289	10/12/93
5,251,849	07/456,533	10/12/93
5,251,853	07/753,550	10/12/93
5,251,854	07/940,307	10/12/93
5,251,858	07/890,231	10/12/93
5,251,860	07/843,028	10/12/93
5,251,862	07/803,447	10/12/93
5,251,865	07/865,453	10/12/93
5,251,866	07/779,813	10/12/93
5,251,869	07/998,939	10/12/93
5,251,885	07/839,569	10/12/93
5,251,893	07/995,592	10/12/93
5,251,899	07/901,371	10/12/93
5,251,904	07/933,763	10/12/93
5,251,907	07/931,026	10/12/93
5,251,910	07/818,571	10/12/93
5,251,915	07/665,526	10/12/93
5,251,921	07/926,936	10/12/93
5,251,924	08/011,127	10/12/93
5,251,925	07/685,823	10/12/93
5,251,934	07/739,910	10/12/93
5,251,935	07/878,811	10/12/93
5,251,944	07/936,021	10/12/93
5,251,946	07/823,196	10/12/93
5,251,947	07/942,452	10/12/93
5,251,953	07/821,381	10/12/93
5,251,959	07/746,647	10/12/93
5,251,960	07/867,753	10/12/93
5,251,961	07/866,565	10/12/93
5,251,964	07/923,641	10/12/93
5,251,971	07/849,051	10/12/93
5,251,972	07/816,124	10/12/93
5,251,973	07/848,339	10/12/93
5,251,977	07/919,205	10/12/93
5,251,985	07/765,768	10/12/93
5,251,990	07/572,013	10/12/93
5,251,995	07/975,623	10/12/93
5,251,996	07/870,940	10/12/93
5,251,997	07/792,282	10/12/93
5,252,001	07/808,889	10/12/93
5,252,004	07/912,734	10/12/93
5,252,005	07/845,271	10/12/93
5,252,006	08/015,136	10/12/93
5,252,009	07/940,338	10/12/93
5,252,013	07/822,198	10/12/93
5,252,028	07/944,360	10/12/93
5,252,037	07/922,674	10/12/93
5,252,057	07/829,761	10/12/93
5,252,059	07/886,781	10/12/93
5,252,060	07/859,002	10/12/93
5,252,061	07/882,048	10/12/93
5,252,066	07/936,977	10/12/93
5,252,067	07/829,249	10/12/93
5,252,072	07/991,744	10/12/93
5,252,075	07/860,133	10/12/93
5,252,101	07/825,149	10/12/93
5,252,102	07/926,485	10/12/93
5,252,103	07/831,473	10/12/93
5,252,104	07/753,473	10/12/93
5,252,107	07/749,307	10/12/93
5,252,108	07/943,467	10/12/93
5,252,119	07/784,587	10/12/93
5,252,129	07/875,248	10/12/93
5,252,147	07/655,236	10/12/93
5,252,160	07/614,289	10/12/93
5,252,161	07/950,575	10/12/93
5,252,165	07/826,343	10/12/93
5,252,166	07/550,180	10/12/93
5,252,168	07/788,403	10/12/93
5,252,170	07/728,290	10/12/93
5,252,176	07/828,781	10/12/93
5,252,181	07/808,745	10/12/93
5,252,183	07/760,057	10/12/93
5,252,198	07/781,172	10/12/93
5,252,209	07/871,046	10/12/93
5,252,211	07/940,358	10/12/93
5,252,218	07/892,218	10/12/93
5,252,220	07/411,683	10/12/93
5,252,221	07/695,814	10/12/93
5,252,230	07/965,529	10/12/93
5,252,231	07/812,119	10/12/93
5,252,237	07/923,655	10/12/93
5,252,244	07/838,443	10/12/93
5,252,254	07/998,437	10/12/93
5,252,255	07/521,772	10/12/93
5,252,267	08/033,931	10/12/93
5,252,276	07/875,473	10/12/93
5,252,279	07/642,641	10/12/93
5,252,283	07/938,108	10/12/93
5,252,290	07/443,136	10/12/93
5,252,291	07/909,672	10/12/93
5,252,292	07/524,562	10/12/93
5,252,294	07/830,755	10/12/93
5,252,297	07/789,497	10/12/93
5,252,299	07/889,250	10/12/93
5,252,300	07/878,848	10/12/93
5,252,302	07/915,327	10/12/93
5,252,303	07/896,742	10/12/93
5,252,307	07/944,367	10/12/93
5,252,313	07/812,511	10/12/93
5,252,314	07/620,019	10/12/93
5,252,316	07/569,576	10/12/93
5,252,317	07/887,542	10/12/93

Patent Number	Serial Number	Issue Date
5,252,320	07/512,288	10/12/93
5,252,324	07/836,570	10/12/93
5,252,325	07/857,150	10/12/93
5,252,328	07/335,726	10/12/93
5,252,342	07/488,199	10/12/93
5,252,349	07/876,582	10/12/93
5,252,355	07/738,013	10/12/93
5,252,364	07/824,188	10/12/93
5,252,371	07/892,128	10/12/93
5,252,372	07/694,442	10/12/93
5,252,376	07/968,254	10/12/93
5,252,377	07/882,077	10/12/93
5,252,381	07/900,362	10/12/93
5,252,385	07/983,278	10/12/93
5,252,405	07/854,936	10/12/93
5,252,407	07/794,623	10/12/93
5,252,446	07/942,465	10/12/93
5,252,450	07/651,323	10/12/93
5,252,462	07/457,691	10/12/93
5,252,464	07/940,772	10/12/93
5,252,465	07/477,833	10/12/93
5,252,467	07/817,916	10/12/93
5,252,468	07/842,304	10/12/93
5,252,471	07/848,573	10/12/93
5,252,472	07/832,314	10/12/93
5,252,481	07/733,764	10/12/93
5,252,485	07/565,467	10/12/93
5,252,491	07/666,272	10/12/93
5,252,494	07/859,869	10/12/93
5,252,514	07/781,249	10/12/93
5,252,516	07/839,451	10/12/93
5,252,549	07/733,709	10/12/93
5,252,557	07/636,710	10/12/93
5,252,558	07/750,330	10/12/93
5,252,559	07/747,811	10/12/93
5,252,563	07/812,242	10/12/93
5,252,564	07/677,716	10/12/93
5,252,570	07/707,528	10/12/93
5,252,572	07/903,246	10/12/93
5,252,573	07/793,183	10/12/93
5,252,574	07/846,152	10/12/93
5,252,576	07/640,413	10/12/93
5,252,582	08/015,701	10/12/93
5,252,585	07/903,051	10/12/93
5,252,589	07/990,239	10/12/93
5,252,590	07/903,135	10/12/93
5,252,593	07/883,380	10/12/93
5,252,596	07/903,940	10/12/93
5,252,598	07/879,108	10/12/93
5,252,599	07/936,810	10/12/93
5,252,610	07/843,016	10/12/93
5,252,612	07/905,075	10/12/93
5,252,616	08/015,720	10/12/93
5,252,618	07/688,226	10/12/93
5,252,631	07/743,626	10/12/93
5,252,633	07/672,949	10/12/93
5,252,640	07/832,631	10/12/93
5,252,647	07/793,534	10/12/93
5,252,648	07/985,977	10/12/93
5,252,665	07/815,915	10/12/93
5,252,671	07/887,213	10/12/93
5,252,672	07/801,044	10/12/93
5,252,674	07/459,982	10/12/93
5,252,675	07/797,986	10/12/93
5,252,690	08/011,598	10/12/93
5,252,691	07/819,239	10/12/93
5,252,692	07/617,177	10/12/93
5,252,698	07/960,487	10/12/93
5,252,707	07/700,152	10/12/93
5,252,719	07/572,595	10/12/93
5,252,728	07/806,669	10/12/93
5,252,735	07/842,020	10/12/93
5,252,736	07/789,230	10/12/93
5,252,745	07/704,906	10/12/93
5,252,757	07/736,545	10/12/93
5,252,762	07/679,787	10/12/93

5,252,770	07/361,158	10/12/93
5,252,771	07/706,426	10/12/93
5,252,785	07/817,881	10/12/93
5,252,786	07/965,765	10/12/93
5,252,787	07/697,784	10/12/93
5,252,794	07/921,101	10/12/93
5,252,796	07/840,562	10/12/93
5,252,799	07/920,478	10/12/93
5,252,804	07/883,765	10/12/93
5,252,808	07/796,202	10/12/93
5,252,809	07/767,322	10/12/93
5,252,811	07/743,266	10/12/93
5,252,822	07/951,907	10/12/93
5,252,824	07/913,098	10/12/93
5,252,838	08/005,876	10/12/93
5,252,852	07/989,877	10/12/93
5,252,855	07/775,549	10/12/93
5,252,859	07/993,694	10/12/93
5,252,869	07/849,944	10/12/93
5,252,878	07/991,886	10/12/93
5,252,879	07/841,531	10/12/93
5,252,883	07/828,221	10/12/93
5,252,891	07/878,925	10/12/93
5,252,894	07/862,455	10/12/93
5,252,899	07/877,394	10/12/93
5,252,900	07/634,691	10/12/93
5,252,906	07/832,586	10/12/93
5,252,912	07/711,921	10/12/93
5,252,918	07/812,199	10/12/93
5,252,938	07/840,014	10/12/93
5,252,942	07/817,759	10/12/93
5,252,948	07/855,097	10/12/93
5,252,958	07/755,057	10/12/93
5,252,969	07/717,100	10/12/93
5,252,970	07/648,150	10/12/93
5,252,974	07/225,240	10/12/93
5,252,978	07/913,665	10/12/93
5,252,980	07/918,184	10/12/93
5,253,034	07/849,185	10/12/93
5,253,037	07/925,560	10/12/93
5,253,051	07/664,800	10/12/93
5,253,069	07/796,773	10/12/93
5,253,101	07/267,858	10/12/93
5,253,105	07/938,030	10/12/93
5,253,107	07/770,105	10/12/93
5,253,115	07/690,464	10/12/93
5,253,118	08/003,812	10/12/93
5,253,140	07/774,523	10/12/93
5,253,141	07/840,163	10/12/93
5,253,143	07/828,945	10/12/93
5,253,148	07/837,801	10/12/93
5,253,149	08/007,110	10/12/93
5,253,150	07/907,123	10/12/93
5,253,158	07/690,251	10/12/93
5,253,166	07/677,556	10/12/93
5,253,175	07/580,995	10/12/93
5,253,183	07/803,894	10/12/93
5,253,195	08/013,541	10/12/93
5,253,199	07/717,302	10/12/93
5,253,202	07/651,070	10/12/93
5,253,219	07/465,919	10/12/93
5,253,224	07/635,124	10/12/93
5,253,228	07/833,554	10/12/93
5,253,261	07/945,385	10/12/93
5,253,273	07/761,665	10/12/93
5,253,276	07/985,744	10/12/93
5,253,292	07/751,450	10/12/93
5,253,299	07/915,868	10/12/93
5,253,317	07/795,708	10/12/93
5,253,329	07/813,556	10/12/93
5,253,331	07/725,123	10/12/93
5,253,336	07/511,727	10/12/93
5,253,341	07/683,972	10/12/93
5,253,343	07/914,020	10/12/93
5,253,344	07/755,246	10/12/93
5,253,345	07/924,360	10/12/93
5,253,350	07/555,778	10/12/93
5,253,352	07/435,880	10/12/93

Patents Reinstated Due to the Acceptance of a Late Maintenance Fee From 8/22/97

Patent Number	Serial Number	Filing Date	Issue Date	Granted Date
4,396,172	06/275,341	06/19/81	08/02/83	08/28/97
4,448,357	06/355,794	03/08/82	05/15/84	08/26/97
4,511,666	06/450,337	12/16/82	04/16/85	08/22/97
4,563,981	06/670,054	11/09/84	01/14/86	08/22/97
4,742,936	07/071,605	07/09/87	05/10/88	08/26/97
4,791,413	07/078,126	07/15/87	12/13/88	08/22/97
4,817,531	07/145,077	01/19/88	04/04/89	08/22/97
4,832,143	07/149,417	01/29/88	05/23/89	08/26/97
4,834,270	07/179,854	04/11/88	05/30/89	08/25/97
4,901,387	07/170,819	03/21/88	02/20/90	08/25/97
4,997,224	07/399,070	08/24/89	03/05/91	08/28/97
5,006,046	07/410,841	09/22/89	04/09/91	08/28/97
5,018,230	07/508,165	04/12/90	05/28/91	08/25/97
5,037,136	07/506,021	04/09/90	08/06/91	08/27/97
5,090,749	07/638,367	01/04/91	02/25/92	08/28/97
5,136,795	07/815,415	12/31/91	08/11/92	08/26/97
5,149,026	07/751,137	08/28/91	09/22/92	08/25/97
5,156,712	07/482,908	02/22/90	10/20/92	08/25/97
5,170,620	07/693,141	04/29/91	12/15/92	08/22/97
5,201,967	07/806,077	12/11/91	04/13/93	08/22/97
5,218,757	07/722,545	06/25/91	06/15/93	08/22/97
5,225,391	07/840,083	02/24/92	07/06/93	08/22/97

Patents Reinstated Due to the Acceptance of a Late Maintenance Fee From 8/29/97

Patent Number	Serial Number	Filing Date	Issue Date	Granted Date
4,499,193	06/450,336	12/16/82	02/12/85	08/29/97
5,015,909	07/458,849	12/29/89	05/14/91	08/29/97
5,160,600	07/488,256	03/05/90	11/03/92	09/04/97

Patents Reinstated Due to the Acceptance of a Late Maintenance Fee From 9/05/97

Patent Number	Serial Number	Filing Date	Issue Date	Granted Date
4,832,453	06/944,501	12/17/86	05/23/89	09/10/97

Reissue Applications Filed

Notice under 37 CFR 1.11(b). The reissue applications listed below are open to inspection by the general public in the indicated Examining Groups and copies may be obtained by paying the fee therefor (37 CFR 1.12(b)).

5,635,266, Re. S.N. 08/911,622, Aug. 15, 1997, Cl. 428/057, PATTERNED HEAT WELDING ROD FOR SEAMING RESILIENT, Edwin J. Quinn, et. al., Owner of Record: *Armstrong World Industries Inc., Lancaster, Pa.*, Attorney or Agent: Robin M. Davis, Ex. Gp.: 1315

Requests for Reexamination Filed

Notice under 37 CFR 1.11(c). The requests for reexamination listed below are open to inspection by the general public in the indicated Examining Groups. Copies of the requests and related papers may be obtained by paying the fee therefor established in the Rules (37 CFR 1.19(a)).

In the event correspondence to the patent owner is not received, this notice will be considered to be constructive notice to the patent owner and reexamination will proceed (37 CFR 1.248(a)(5) and 1.525(b)).

4,921,749, Reexam. No. 90/004,821, Oct. 31, 1997, Cl. 428/216, SEALABLE FILMS, Bernard L. I. Bossaert, et. al., Owner of Record: *Exxon Chemical Patents, Inc., Linden, N.J.*, Attorney or Agent: Anthony R. Chi, Exxon Chemical Co., Baytown, Tex., Ex. Gp.: 1317, Requester: Owner

4,922,936, Reexam. No. 90/004,820, Oct. 29, 1997, Cl. 132/321, DENTAL CLEANER, Carlo A. Buzzi, et. al., Owner of Record: *Ulrich Peter Saxer, Zurich, Switzerland; Walter Koller, Waldkirch, Switzerland; and Franz Aschwanden, Gersau, Switzerland*, Attorney or Agent: Bernard Rothwell & Brown, Washington, D.C., Ex. Gp.: 3303, Requester: Eric P. Schellin, Arlington, Va.

5,343,749, Reexam. No. 90/004,818, Oct. 28, 1997, Cl. 073/505, SINGLE ENDED TUNING FORK INERTIAL SENSOR AND METHOD, David F. Macy, Owner of Record: *New SD Inc., San Francisco, Calif.*, Attorney or Agent: Flehr Hohback Test Albritton & Herbert, Harold C. Hohback, San Francisco, Calif., Ex. Gp.: 2212, Requester: Scott C. Harris Fish and Richardson, La Jolla, Calif.

5,343,749, Reexam. No. 90/004,819, Oct. 28, 1997, Cl. 073/505, SINGLE ENDED TUNING FORK INERTIAL SENSOR AND METHOD, David F. Macy, Owner of Record: *New SD Inc., San Francisco, Calif.*, Attorney or Agent: Flehr Hohback Test Albritton & Herbert, Harold C. Hohback, San Francisco, Calif., Ex. Gp.: 2212, Requester: Scott C. Harris Fish and Richardson, La Jolla, Calif.

Notice of Expiration of Trademark Registrations Due To Failure to Renew

15 U.S.C. 1059 provides that each trademark registration may be renewed for periods of ten years from the end of the expiring period upon payment of the prescribed fee and the filing of an acceptable application for renewal. This may be done at any time within six months before the expiration of the period for which the registration was issued or renewed, or it may be done within three months after such expiration on payment of an additional fee.

According to the records of the Office, the trademark registrations listed below are expired due to failure to renew in accordance with 15 U.S.C. 1059.

TRADEMARK REGISTRATIONS WHICH EXPIRED OCTOBER 6, 1997 DUE TO FAILURE TO RENEW

Reg. Number	Serial Number	Reg. Date
114,705	71/097,497	01/02/1917
114,709	71/097,504	01/02/1917
114,710	71/097,597	01/02/1917
114,713	71/088,980	01/02/1917
330,150	71/365,095	11/19/1935
341,929	71/380,314	12/29/1936
341,934	71/382,062	12/29/1936
341,977	71/382,555	12/29/1936
341,979	71/382,553	12/29/1936
342,022	71/381,601	12/29/1936
342,027	71/381,758	12/29/1936
639,161	71/692,063	01/01/1957
639,162	71/693,210	01/01/1957
639,163	71/693,279	01/01/1957
639,164	71/693,280	01/01/1957
639,174	71/699,777	01/01/1957
639,179	72/000,156	01/01/1957
639,182	72/004,473	01/01/1957
639,185	72/004,696	01/01/1957
639,202	72/003,935	01/01/1957
639,225	72/007,310	01/01/1957
639,233	72/009,401	01/01/1957
639,244	72/002,963	01/01/1957
639,246	72/005,762	01/01/1957
639,276	72/001,524	01/01/1957
639,280	72/006,797	01/01/1957
639,283	71/677,007	01/01/1957
639,288	71/691,939	01/01/1957
639,294	72/000,653	01/01/1957
639,318	72/007,116	01/01/1957
639,320	72/008,262	01/01/1957
639,334	71/693,750	01/01/1957
639,339	72/004,223	01/01/1957
639,340	72/004,224	01/01/1957
639,351	71/698,325	01/01/1957
639,360	72/003,824	01/01/1957
639,361	72/004,578	01/01/1957
639,369	72/007,392	01/01/1957
639,371	72/007,655	01/01/1957
639,372	72/007,727	01/01/1957
639,380	71/684,190	01/01/1957
639,388	72/001,800	01/01/1957
639,398	71/691,265	01/01/1957
639,408	72/009,492	01/01/1957
639,413	72/009,714	01/01/1957
639,417	71/695,845	01/01/1957
639,434	71/700,412	01/01/1957
639,437	72/000,223	01/01/1957
639,438	72/001,136	01/01/1957
639,444	71/693,335	01/01/1957
639,447	71/700,883	01/01/1957
639,459	71/698,209	01/01/1957
1,042,749	73/047,770	07/06/1976
1,054,887	73/064,315	12/28/1976
1,054,893	73/082,425	12/28/1976
1,054,895	73/088,048	12/28/1976
1,054,897	73/080,683	12/28/1976
1,054,899	73/087,804	12/28/1976
1,054,901	73/069,921	12/28/1976
1,054,902	73/060,432	12/28/1976
1,054,913	73/086,797	12/28/1976
1,054,914	73/086,919	12/28/1976
1,054,918	73/085,587	12/28/1976
1,054,934	73/079,909	12/28/1976
1,054,942	73/090,328	12/28/1976
1,054,944	73/047,224	12/28/1976
1,054,946	73/051,867	12/28/1976
1,054,948	73/060,633	12/28/1976
1,054,951	73/063,531	12/28/1976
1,054,957	73/085,995	12/28/1976
1,054,958	73/086,596	12/28/1976
1,054,960	73/043,751	12/28/1976
1,054,961	73/047,968	12/28/1976
1,054,964	73/057,296	12/28/1976
1,054,965	73/059,620	12/28/1976
1,054,967	73/060,738	12/28/1976
1,054,969	73/061,434	12/28/1976
1,054,973	73/083,104	12/28/1976
1,054,975	73/084,704	12/28/1976
1,054,976	73/084,898	12/28/1976
1,054,977	73/084,903	12/28/1976
1,054,979	73/086,499	12/28/1976
1,054,981	73/087,090	12/28/1976
1,054,983	73/089,300	12/28/1976
1,054,985	73/089,417	12/28/1976
1,054,986	73/060,726	12/28/1976
1,054,987	73/060,727	12/28/1976
1,054,994	73/032,379	12/28/1976
1,054,997	73/040,599	12/28/1976
1,055,004	73/064,638	12/28/1976
1,055,006	73/065,021	12/28/1976
1,055,010	73/068,529	12/28/1976
1,055,012	73/070,984	12/28/1976
1,055,015	73/073,146	12/28/1976
1,055,018	73/079,300	12/28/1976
1,055,021	73/081,640	12/28/1976
1,055,024	73/085,827	12/28/1976
1,055,027	73/087,802	12/28/1976
1,055,028	73/050,488	12/28/1976
1,055,032	73/084,430	12/28/1976
1,055,033	73/085,389	12/28/1976
1,055,036	73/089,631	12/28/1976
1,055,037	73/089,900	12/28/1976
1,055,038	73/090,162	12/28/1976
1,055,041	73/090,346	12/28/1976
1,055,042	73/042,836	12/28/1976
1,055,043	73/047,794	12/28/1976
1,055,044	73/055,183	12/28/1976
1,055,049	73/082,807	12/28/1976
1,055,050	73/082,808	12/28/1976
1,055,052	73/034,318	12/28/1976
1,055,054	73/055,182	12/28/1976
1,055,058	73/082,395	12/28/1976
1,055,059	73/082,679	12/28/1976
1,055,062	73/083,357	12/28/1976
1,055,063	73/083,391	12/28/1976
1,055,065	73/048,625	12/28/1976
1,055,074	73/085,800	12/28/1976
1,055,077	73/051,947	12/28/1976
1,055,080	73/062,181	12/28/1976
1,055,083	73/067,935	12/28/1976
1,055,084	73/069,179	12/28/1976
1,055,091	73/080,537	12/28/1976
1,055,092	73/081,783	12/28/1976
1,055,093	73/086,623	12/28/1976
1,055,094	73/067,393	12/28/1976
1,055,107	73/069,683	12/28/1976
1,055,109	73/078,416	12/28/1976
1,055,110	73/084,030	12/28/1976
1,055,113	73/087,702	12/28/1976
1,055,115	73/054,623	12/28/1976
1,055,116	73/067,795	12/28/1976
1,055,121	73/079,377	12/28/1976
1,055,126	73/058,910	12/28/1976
1,055,127	73/070,728	12/28/1976
1,055,129	73/074,185	12/28/1976
1,055,130	73/074,330	12/28/1976

Reg. Number	Serial Number	Reg. Date
1,055,132	73/074,727	12/28/1976
1,055,139	73/086,353	12/28/1976
1,055,141	73/049,139	12/28/1976
1,055,145	73/062,365	12/28/1976
1,055,147	73/075,396	12/28/1976
1,055,150	73/084,786	12/28/1976
1,055,155	73/060,282	12/28/1976
1,055,157	73/067,203	12/28/1976
1,055,158	73/068,225	12/28/1976
1,055,161	73/075,109	12/28/1976
1,055,165	73/080,296	12/28/1976
1,055,167	73/083,028	12/28/1976
1,055,170	73/084,622	12/28/1976
1,055,171	73/084,889	12/28/1976
1,055,175	73/086,045	12/28/1976
1,055,176	73/086,047	12/28/1976
1,055,197	73/063,425	12/28/1976
1,055,201	73/073,921	12/28/1976
1,055,211	73/088,331	12/28/1976
1,055,214	73/088,717	12/28/1976
1,055,216	73/088,802	12/28/1976
1,055,223	73/078,754	12/28/1976
1,055,230	73/088,656	12/28/1976
1,055,231	73/045,632	12/28/1976
1,055,233	73/059,068	12/28/1976
1,055,235	73/080,759	12/28/1976
1,055,236	73/082,433	12/28/1976
1,055,238	73/087,348	12/28/1976
1,055,240	73/087,353	12/28/1976
1,055,241	73/088,254	12/28/1976
1,055,244	73/037,841	12/28/1976
1,055,247	73/074,083	12/28/1976
1,055,253	73/086,657	12/28/1976
1,055,254	73/086,693	12/28/1976
1,055,255	73/088,381	12/28/1976
1,055,257	73/083,183	12/28/1976
1,055,259	73/078,990	12/28/1976
1,055,262	73/065,632	12/28/1976
1,055,263	73/076,515	12/28/1976
1,055,264	73/077,731	12/28/1976
1,055,265	73/084,043	12/28/1976
1,055,267	73/044,163	12/28/1976
1,055,269	73/058,898	12/28/1976
1,055,280	73/079,678	12/28/1976
1,055,282	73/076,566	12/28/1976
1,055,287	73/074,720	12/28/1976
1,055,292	73/060,456	12/28/1976
1,055,294	73/069,410	12/28/1976
1,055,296	73/079,378	12/28/1976
1,055,302	73/064,594	12/28/1976
1,055,307	73/073,302	12/28/1976
1,055,308	73/073,732	12/28/1976
1,055,310	73/076,230	12/28/1976
1,055,311	73/078,224	12/28/1976
1,055,312	72/467,121	12/28/1976
1,055,329	73/060,611	12/28/1976
1,055,337	73/063,109	12/28/1976
1,055,338	73/097,376	12/28/1976
1,055,341	73/056,699	12/28/1976
1,055,342	73/046,588	12/28/1976
1,055,344	73/035,739	12/28/1976
1,055,345	73/089,988	12/28/1976
1,055,346	73/068,941	12/28/1976
1,055,347	73/059,645	12/28/1976
1,059,760	73/092,424	02/22/1977

Service by Publication

A petition to cancel the registrations identified below having been filed, and the notice of such proceeding sent by certified mail to registrants at their last known address having been returned by the Postal Service as undeliverable, notice is hereby given that unless the registrants listed herein, their assigns or legal representatives, shall enter an appearance within thirty days of this publication, the cancellation will proceed as in the case of default.

Kangaroos U.S.A., Inc., Chesterfield, Mo., Reg. No. 1,075,566, for the mark "Aspen Trail Finders and Design", Canc. No. 26,345.

Kent Records, Inc., Elizabethtown, Ky., Reg. No. 720,346, for the mark "CAMELOT", Canc. No. 26,097.

Pan American Seafood, Inc., Woodbridge, N.J., Reg. No. 1,820,742, for the mark "ENACA GOLD", Canc. No. 25,795.

The National Bank of Washington, Washington, D.C., Reg. No. 1,074,731, for the mark "CHEXTRA", Canc. No. 26,091.

Posner Industries, Inc., South Plainfield, N.J., Reg. No. 1,255,012, for the mark "Perfect Performance", Canc. No. 26,248.

JEAN BROWN
Technical Program Manager
Trademark Trial
and Appeal Board, for
ROBERT M. ANDERSON
Deputy Assistant Commissioner
for Trademarks

Patent Terms Extended Under 35 U.S.C. § 156

Certificates extending the term of the following patents were issued on November 20, 1997.

U.S. Patent No. 4,154,839; Granted May 15, 1979, to Egbert Wehinger et al.; Owner of Record: Bayer Aktiengesellschaft; Title: 2,6-Dimethyl-3-Carboxymethoxy-4-(2-Nitrophenyl)-5-Carbisobutoxy-1,4-Dihydropyridine; Classification: 424/266; Product Trade Name: NISOCOR®; Original Expiration Date: November 2, 1996; Term Extended: Two years; Extended Expiration Date: November 2, 1998.

U.S. Patent No. 4,457,942; Granted July 3, 1984, to Saul W, Brusilow; Owner of Record: Ucyclyd Pharma, Inc.; Title: Process for Waste Nitrogen Removal; Classification: 424/317; Product Trade Name: Buphenyl Powder (sodium phenylbutyrate); Original Expiration Date: August 20, 2002; Term Extended: two years; Extended Expiration Date: August 20, 2004.

U.S. Patent No. 4,814,470; Granted March 21, 1989, to Michel Colin et al.; Owner of Record: Rhone-Poulenc Rorer S.A.; Title: Taxol Derivatives, Their Preparation and Pharmaceutical Compositions Containing Them; Classification: 514/449; Product Trade Name: TAXOTERE®; Original Expiration Date: July 14, 2007; Term Extended: 1,035 days; Extended Expiration Date: May 14; 2010.

U.S. Patent No. 4,816,456; Granted: March 28, 1989, to Dr. William K. Summers; Owner of Record: Dr. William K. Summers; Title: Administration of Monoamine Acridines in Cholinergic Neuronal Deficit States; Classification: 514/255; Product Trade Name: COGNEX®; Original Expiration Date: October 1, 2006; Term Extended: 343 days; Extended Expiration Date: September 9, 2007.

Registration to Practice

The following person successfully passed the registration examination that was held August 28, 1996, and has been given provisional recognition pursuant to 37 CFR 10.9(a) to prepare and prosecute patent applications before the Office until applicant's registration certificate is mailed to applicant. Final approval for registration is subject to establishing to the satisfaction of the Director of the Office of Enrollment and Discipline that the person seeking registration is of good moral character and repute. [37 CFR 10.7(a)]. Accordingly, any information tending to affect the eligibility of the following applicant on moral, ethical, or other grounds should be furnished to the Director, Office of Enrollment and Discipline on or before Feb. 6, 1998.

Law, Patrick B., 801 15th Street South, #626, Arlington, Va. 22202

November 24, 1997 Karen L. Bovard, *Director*
Office of Enrollment and Discipline

Registration to Practice

The following list contains the names of persons applying for registration to practice before the United States Patent and Trademark Office who have been given provisional recognition pursuant to 37 CFR 10.9(a) to prepare and prosecute patent applications before the Office until their registration certificates are mailed to them. Final approval for registration is subject to establishing to the satisfaction of the Director of the Office of Enrollment and Discipline that the person seeking registration is of good moral character and repute. [37 CFR 10.7(a)]. Accordingly, any information tending to affect the eligibility of any of the following applicants on moral, ethical, or other grounds should be furnished to the Director, Office of Enrollment and Discipline on or before Feb. 6, 1998.

Dean, Ralph H., Jr., 1704 Old Stage Rd., Alexandria, Va. 22308

Eckenswiller, Laura C., 2007-475 Laurier Ave. W., Ottawa, Ont., K1R 7X1, Canada

Freedman, Gordon S., 41 Elvaston Ave., Nepean, Ont., K2G 3Y1, Canada

Hulina, Amy L., 824 S. Arlington Mill Dr., #204, Arlington, Va. 22204

Kelley, Lara C., 921 S. 21st St., Arlington, Va. 22202

Leier, Terry L., 2837 Maple Ln., R.R. #1, Dunrobin, Ont., K0A 1T0, Canada

Schmidt, Jeffrey A., 6105-F Wigmore Ln., Alexandria, Va. 22315

Shapiro, Paul E., 10424 Collingham Dr., Fairfax, Va. 22032

Weisstuch, Aaron, 1701 Nordic Hill Circle, Silver Spring, Md. 20906

November 25, 1997 Karen L. Bovard, *Director*
Office of Enrollment and Discipline

Registration To Practice

The November 11, 1997 Official Gazette listed the name of Soeun G. Doh as successfully passing the August 27, 1997 registration examination. However, the August 27, 1997 date should have read **AUGUST 28, 1996**.

November 24, 1997 Karen L. Bovard, *Director*
Office of Enrollment and Discipline

Errata

"All reference to Patent No. 5,691,198 to Xiaomei Jin, et. al. of Texas, for P16 EXPRESSION CONSTRUCTS AND THEIR APPLICATION IN CANCER THERAPY appearing in the Official Gazette of November 25, 1997, should be deleted since no patent was granted."

Certificates of Correction for the Week of December 23, 1997

D. 352,856	D. 383,536	5,171,363	5,287,508
D. 366,311	D. 384,642	5,175,664	5,288,236
D. 380,148	P. 09,862	5,265,233	5,301,136
D. 380,640	P. 09,863	5,274,365	5,303,392
D. 381,040	Re. 35,519	5,278,495	5,305,444
D. 382,587	Re. 35,525	5,286,723	5,313,751

5,314,767	5,609,769	5,644,021	5,663,684
5,316,925	5,612,403	5,644,482	5,664,155
5,317,003	5,613,126	5,645,182	5,664,242
5,350,563	5,613,584	5,645,519	5,664,250
5,357,624	5,614,196	5,645,700	5,664,688
5,401,117	5,614,204	5,646,333	5,665,063
5,401,964	5,615,451	5,646,701	5,665,161
5,403,710	5,615,504	5,646,755	5,665,334
5,407,839	5,616,175	5,646,840	5,665,496
5,411,947	5,618,284	5,646,905	5,665,824
5,455,607	5,620,140	5,647,390	5,666,356
5,472,840	5,621,052	5,647,457	5,666,407
5,484,990	5,621,668	5,647,726	5,666,547
5,498,627	5,621,696	5,648,900	5,666,673
5,500,475	5,622,578	5,649,045	5,667,241
5,504,569	5,622,634	5,649,066	5,667,434
5,504,939	5,622,747	5,649,237	5,667,604
5,509,115	5,622,808	5,649,542	5,667,617
5,510,839	5,623,233	5,649,603	5,667,802
5,513,127	5,624,542	5,649,836	5,668,042
5,515,735	5,624,662	5,649,912	5,668,254
5,521,835	5,624,745	5,650,197	5,668,840
5,528,988	5,625,710	5,650,831	5,669,205
5,532,363	5,626,324	5,650,914	5,669,325
5,536,967	5,627,097	5,651,409	5,669,507
5,538,698	5,627,469	5,651,774	5,669,511
5,539,791	5,627,849	5,652,067	5,670,278
5,543,761	5,628,315	5,652,172	5,670,515
5,551,307	5,629,339	5,652,460	5,671,642
5,553,615	5,629,529	5,652,887	5,671,888
5,553,947	5,629,728	5,653,312	5,671,889
5,556,641	5,629,890	5,653,857	5,672,944
5,557,862	5,629,910	5,654,110	5,673,111
5,559,751	5,629,911	5,654,295	5,673,577
5,559,878	5,630,062	5,654,434	5,674,499
5,563,240	5,630,229	5,654,884	5,674,577
5,563,529	5,630,592	5,654,915	5,674,664
5,565,815	5,631,456	5,654,967	5,674,721
5,566,123	5,632,831	5,655,108	5,674,929
5,568,318	5,633,333	5,656,151	5,675,028
5,571,875	5,633,702	5,656,235	5,675,517
5,572,742	5,633,704	5,656,361	5,675,537
5,576,247	5,633,756	5,656,629	5,675,956
5,576,321	5,633,984	5,656,635	5,676,180
5,577,447	5,634,141	5,656,985	5,676,226
5,578,652	5,634,195	5,657,041	5,676,276
5,581,034	5,635,326	5,657,604	5,676,317
5,585,752	5,635,416	5,657,860	5,676,729
5,587,225	5,635,803	5,657,876	5,676,991
5,587,643	5,635,970	5,658,027	5,677,034
5,589,911	5,636,011	5,658,551	5,677,472
5,592,635	5,637,210	5,658,920	5,678,202
5,593,595	5,637,217	5,659,100	5,678,753
5,595,208	5,637,747	5,659,191	5,678,835
5,595,409	5,637,912	5,659,266	5,679,206
5,597,166	5,638,391	5,659,281	5,679,263
5,597,238	5,638,857	5,659,337	5,679,281
5,597,939	5,639,493	5,659,357	5,679,298
5,599,825	5,639,525	5,659,389	5,679,551
5,599,838	5,639,674	5,659,666	5,679,717
5,602,077	5,640,250	5,659,749	5,679,913
5,602,531	5,641,478	5,659,824	5,680,055
5,604,539	5,642,145	5,660,041	5,680,276
5,605,468	5,642,231	5,660,663	5,680,413
5,606,159	5,642,444	5,660,828	5,680,426
5,606,541	5,642,813	5,661,521	5,681,745
5,606,610	5,643,303	5,662,465	5,681,748
5,607,747	5,643,335	5,663,188	5,682,199
5,608,020	5,643,771	5,663,243	
5,609,641	5,643,853	5,663,398	
5,609,693	5,643,888	5,663,549	

Summary of Final Decisions

Issued by the

Trademark Trial and Appeal Board

November 3-7, 1997

Date Issued	Type of Case[1]	Proceeding or App'n No.	Party/Parties	Issue	TTAB Decision	Opposer's/ Petitioner's Mark and Goods/Services	Applicant's/ Respondent's Mark and Goods/Services	Mark and Goods Cited by Examining Attorney	Citable as Precedent of TTAB
11-3	OPP	92,010	D.A.R.E. America v. Dare To Be Great, Inc.	2(d)	Opposition Sustained	"DARE" and "PROJECT DARE" [both marks used for promoting the prevention of drug abuse and counseling and dissemination of related educational materials]; "DARE TO SAY NO," "D.A.R.E." and "D.A.R.E. AMERICA" (and flag design) [all three marks used for conducting classes, lectures, seminars, training programs and workshops relating to drug abuse prevention] (opposer claiming a family of "DARE" marks)	"DARE TO BE GREAT" [pre-recorded audio and video cassettes, namely, those dealing with motivational seminars in the area of personal improvement; publications, namely, those dealing with motivational seminars in the area of personal improvement]		No
11-3	EX	74/520,422	V & R Pizzeria, Inc.	2(d)	Refusal Affirmed		"DANTE FAMIGLIA PIZZA AND PASTA" (and design) [pizzeria restaurant services, including carryout services]	"DANTES" [restaurant and cocktail lounges services]	No
11-3	CANC	23,117	American Cyanamid Co. v. Microsurge, Inc.	2(d)	Petition to Cancel Denied	"D-TACH" [surgical and dental needles]	"DETACHATIP" [grasper, dissector, scissors for use in surgery]		No

(1)EX=EX PARTE APPEAL; OPP=OPPOSITION; CANC=CANCELLATION; CU=CONCURRENT USE; (SJ)=SUMMARY JUDGMENT; (R)=REQ. FOR RECONSIDERATION; (MD)=MOTION TO DISMISS; (MR)=MOTION TO REOPEN

Date Issued	Type of Case[1]	Proceeding or App'n No.	Party/Parties	Issue	TTAB Decision	Opposer's/ Petitioner's Mark and Goods/Services	Applicant's/ Respondent's Mark and Goods/Services	Mark and Goods Cited by Examining Attorney	Citable as Precedent of TTAB
11-6	CU	1,012	Dynamark Security Centers, Inc. v. Intruder Alert Systems of San Antonio, Inc.	whether the concurrent use applicant established its entitlement to a concurrent use registration for its claimed territory	Concurrent use registration granted	"S.A.F.E. SECURITY AFFORDABLE FOR EVERYONE" [leasing of security systems for residential and commercial use] (for all of the U.S. except for San Antonio, Texas and four surrounding counties)	"SAFE/SECURITY ALARMS FOR EVERYONE" [burglar alarms] (limited to San Antonio, Texas and four surrounding counties)		No
11-6	OPP	95,834	Intelligent Sports Inc. v. Randy Buller	2(d)	Opposition Dismissed	"THE SPORTS AUTHORITY," "THE LOW PRICE AUTHORITY" et al. [retail store services featuring a wide range of sports equipment-from footwear and apparel to hard goods]; "AUTHORITY" [rainwear, jackets, coats, suits, slacks, and vests]; "THE SKI AUTHORITY" [retail store services featuring ski equipment and clothing]; "THE BAG AUTHORITY" [athletic bags, etc.] (opposer claiming a family of "AUTHORITY" marks)	"PARTS AUTHORITY" [retail store services and distributorship services dealing in automobile parts, supplies and accessories]		No

(1)EX=EX PARTE APPEAL; OPP=OPPOSITION; CANC=CANCELLATION; CU=CONCURRENT USE; (SJ)=SUMMARY JUDGMENT; (R)=REQ. FOR RECONSIDERATION; (MD)=MOTION TO DISMISS; (MR)=MOTION TO REOPEN

Date Issued	Type of Case[1]	Proceeding or App'n No.	Party/Parties	Issue	TTAB Decision	Opposer's/ Petitioner's Mark and Goods/Services	Applicant's/ Respondent's Mark and Goods/Services	Mark and Goods Cited by Examining Attorney	Citable as Precedent of TTAB
11-6	EX	74/528,628	American Biomimetics Corp.	2(e)(2)	Refusal Affirmed		"AMERICAN BIOMIMETICS CORPORATION" [financial services in the field of materials, namely, raising capital, organizing ventures, and providing financial management in connection with searching for and creating new materials, development of techniques for their manufacture in commercial quantities, and research and engineering in connection with their commercial utilization; consulting and research services for others in the field of materials, namely, searching for and creating new materials, development of techniques for their manufacture in commercial quantities, and research and engineering in connection with their commercial utilization]		No

(1)EX=EX PARTE APPEAL; OPP=OPPOSITION; CANC=CANCELLATION; CU=CONCURRENT USE; (SJ)=SUMMARY JUDGMENT; (R)=REQ. FOR RECONSIDERATION; (MD)=MOTION TO DISMISS; (MR)=MOTION TO REOPEN

Date Issued	Type of Case[1]	Proceeding or App'n No.	Party/Parties	Issue	TTAB Decision	Opposer's/ Petitioner's Mark and Goods/Services	Applicant's/ Respondent's Mark and Goods/Services	Mark and Goods Cited by Examining Attorney	Citable as Precedent of TTAB
11-6	OPP (SJ)	103,659	Mattel, Inc. v. Cindy Bunin Nunik	whether applicant is entitled to summary judgment on opposer's 2(d) ground for opposition	Summary Judgment Granted (Opposition Dismissed)	"KELLY" [dolls, doll clothing, and doll accessories]	"KELSEE" [stuffed toy animals]		No
11-6	EX	74/557,929	Spinergy, Inc.	2(d)	Refusal Reversed		"REV-X" [mountain bicycle wheels and racing bicycle wheels made of carbon fiber composite materials]	"REV" (and design) [bicycle parts and accessories-namely, handlebar pads, frame bar pads, single stem pads, double stem pads and seat covers]	No

(1)EX=EX PARTE APPEAL; OPP=OPPOSITION; CANC=CANCELLATION; CU=CONCURRENT USE; (SJ)=SUMMARY JUDGMENT; (R)=REQ. FOR RECONSIDERATION; (MD)=MOTION TO DISMISS; (MR)=MOTION TO REOPEN

SPECIAL BOXES FOR PATENT MAIL

Special box designations should be used to allow forwarding of particular types of mail to the appropriate areas as quickly as possible. Such mail is forwarded to the appropriate area without being opened. Only the specified type of document should be placed in an envelope addressed to one of these special boxes. If any documents other than the specified type identified for each special box are addressed to that box, they will be significantly delayed in reaching the appropriate area for which they are intended.

Please address mail as follows:

Box __________
Assistant Commissioner for Patents
Washington, D.C. 20231

Box Designations	Explanation
Box 7	Reissue applications for patents involved in litigation and subsequently filed related papers.
Box 12	Contributions to the Examiner Education Program.
Box 313b	Petitions under 37 CFR 1.313(b) to withdraw a patent application from issue after payment of the issue fee and any papers associated with the petition, including papers necessary for filing a continuing application.
Box AF	Expedited procedure for processing amendments and other responses after final rejection.
Box Comments Patents	Public comments regarding patent related regulations and procedures.
Box CPA	Requests for Continued Prosecution Applications (CPA's) under 37 CFR 1.53(b).
Box DAC	Petitions decided by the Office of Petitions including petitions to revive and petitions to accept late payment of issue fees or maintenance fees.
Box DD	Disclosure Documents or materials related to the Disclosure Document Program.
Box Design	The filing of all design patent applications and any communications relating thereto.
Box Issue Fee	All communications following the receipt of a PTOL-85, "Notice of Allowance and Issue Fee Due," and prior to the issuance of a patent should be addressed to Box Issue Fee, unless advised to the contrary. Assignments are the exception. Assignments should be submitted in a separate envelope and not be sent to Box Issue Fee.
Box Missing Parts	Response to the Notice to File Missing Parts of Application and associated papers and fees.
Box MPEP	Submissions concerning the Manual of Patent Examining Procedures.
Box Non-Fee Amendment	Non-fee amendments to patent applications. (Use Box AF for responses after final rejection).
Box PATENT APPLICATION	New patent applications and associated papers and fees.
Box Patent Ext.	Applications for patent term extension and any communications relating thereto.
Box PCT	Mail related to applications filed under the Patent Cooperation Treaty.
Box Provisional Patent Application	The filing of all provisional patent applications and any communications relating thereto.
Box Reconstruction	Correspondence pertaining to the reconstruction of lost patent files.
Box Reexam	Requests for Reexamination for *original* request papers *only*.
Box Sequence	Submission of diskette for biotechnical application.
Box SN	For fee and petitions under 37 CFR 1.182 to obtain date received and/or serial number for patent applications *prior* to the Office's standard notification (return post card or the official "Filing Receipt," "Notice to File Missing Parts," or "Notice of Incomplete Application").

SPECIAL BOXES FOR TRADEMARK MAIL

Special box designations should be used to allow forwarding of particular types of trademark mail to the appropriate areas as quickly as possible. In addition to these box designations, filers are encouraged to indicate whether the contents of the envelope contain a fee. Envelopes containing a fee should be marked "FEE;" envelopes not containing a fee should be marked "NO FEE." Box designations and "FEE/NO FEE" indicators should appear on the envelope as well as on the cover sheet or first page of any document.

Please address mail as follows:

Box __________
FEE (or NO FEE)
Assistant Commissioner for Trademarks
2900 Crystal Drive
Arlington, Virginia 22202-3513

Box Designations	Explanation
Box NEW APP FEE	New trademark applications and fees.
Box ITU FEE	Statements of Use (SOUs) and extension requests.
Box TTAB FEE	Oppositions, cancellation petitions, and ex parte appeals.
Box TTAB NO FEE	Interferences, motions, and extension requests.
Box STATUS NO FEE	Written status inquiries.
Box POST REG FEE	Affidavits, renewals, corrections and amendments.
Box RESPONSES NO FEE	Responses to Examining Attorneys' Office actions and Post Registration actions.

SPECIAL BOXES APPLICABLE TO *BOTH* PATENT AND TRADEMARK MAIL

The following special box designations are applicable to both patent and trademark related mail, and the recommendations for "Special Boxes for Patent Mail" (above) should be followed for the types of mail listed below.

Please address mail as follows:

Box ____________
Commissioner of Patents and Trademarks
Washington, D.C. 20231

Box Designations	Explanation
Box 3	Mail for the Office of Personnel from NFC.
Box 4	Mail for the Deputy Assistant Secretary of Commerce and Deputy Commissioner of Patents and Trademarks; Office of Legislative and International Affairs.
Box 6	Mail for the Office of Procurement.
Box 8	All papers for the Office of the Solicitor *except* communications relating to *pending litigation and disciplinary proceedings*; papers relating to pending litigation in court cases shall be mailed only to Office of the Solicitor, P.O. Box 15667, Arlington, Virginia 22215 and papers relating to pending disciplinary proceedings before the Administrative Law Judge or the Commissioner shall be mailed only to the Office of the Solicitor, P.O. Box 16116, Arlington, Virginia 22215.
Box 9	Coupon orders for U.S. patent and trademark copies.
Box 10	Orders for certified copies of PTO documents.
Box 11	Electronic Ordering Service (EOS).
Box 13	Mail for the Employee and Labor Relations Division.
Box 14	Mail directed to the APS Contracts Office.
Box 16	Deposit Account Replenishment Checks.
Box 17	Invoices directed to the Office of Finance.
Box 171	Vacancy Announcement Applications.
Box Assignment	All assignment documents except those filed with new applications.
Box EEO	Mail for the Office of Civil Rights.
Box Interference	Communications relating to interferences and applications and patents involved in interference.
Box M Fee	Correspondence regarding patent maintenance fees and related matter.
Box OED	Mail for the Office of Enrollment and Discipline.

Reference Collections of U.S. Patents and Trademarks Available for Public Use in Patent and Trademark Depository Libraries

The following libraries, designated as Patent and Trademark Depository Libraries (PTDLs), receive patent and trademark information from the U.S. Patent and Trademark Office. Many PTDLs have on file patents issued since 1790, trademarks published since 1872, and select collections of foreign patents. All PTDLs receive both the patent and trademark sections of the *Official Gazette of the U.S. Patent and Trademark Office* and numerical sets of patents in a variety of formats. Patent and trademark search systems in the Cassis CD-ROM series are available at all PTDLs to increase access to that information. It is through the CD-ROM systems and other depository materials that preliminary patent and trademark searches may be conducted through the numerically arranged collections.

Each PTDL offers reference publications which outline and provide access to the patent and trademark classification systems, as well as other documents and publications which supplement the basic search tools. PTDLs provide technical staff assistance in using all materials.

All information is available for use by the public free of charge. However, there may be charges associated with the use of online systems, photocopying and related services.

Since there are variations in the scope of patent and trademark collections among the PTDLs, and their hours of service to the public vary, anyone contemplating use of these collections at a particular library is urged to contact that library in advance about its collections, services, and hours in order to avert possible inconvenience.

Partnership PTDLs provide enhanced and expanded services for which fees are charged. They offer on-line patent text and image searching, on-line trademark searching, and videoconferencing for examiner interviews and workshops. They accept disclosure documents on site, order file wrappers, assignment documents and certified copies for their customers, and host a variety of seminars aimed at specific audiences, including practitioners, paralegals, and independent inventors. Currently, partnerships are located at the Great Lakes Patent and Trademark Center (GLPTC) at the Detroit Public Library in Detroit, Michigan and the Sunnyvale Center for Innovation, Invention and Ideas (SCI[3]) in Sunnyvale, California.

State	*Name of Library*	*Telephone Contact*
Alabama	Auburn University Libraries	(334) 844-1747
	Birmingham Public Library	(205) 226-3620
Alaska	Anchorage: Z.J. Loussac Public Library	(907) 562-7323
Arizona	Tempe: Noble Library, Arizona State University	(602) 965-7010
Arkansas	Little Rock: Arkansas State Library	(501) 682-2053
California	Los Angeles Public Library	(213) 228-7220
	Sacramento: California State Library	(916) 654-0069
	San Diego Public Library	(619) 236-5813
	San Francisco Public Library	(415) 557-4500
	Sunnyvale Center for Innovation, Invention and Ideas	(408) 730-7290
Colorado	Denver Public Library	(303) 640-6220
Connecticut	Hartford Public Library	Not Yet Operational
	New Haven Free Public Library	Not Yet Operational
Delaware	Newark: University of Delaware Library	(302) 831-2965
Dist. of Columbia	Washington: Howard University Libraries	(202) 806-7252
Florida	Fort Lauderdale: Broward County Main Library	(954) 357-7444
	Miami-Dade Public Library	(305) 375-2665
	Orlando: University of Central Florida Libraries	(407) 823-2562
	Tampa Campus Library, University of South Florida	(813) 974-2726
Georgia	Atlanta: Price Gilbert Memorial Library, Georgia Institute of Technology	(404) 894-4508
Hawaii	Honolulu: Hawaii State Public Library System	(808) 586-3477
Idaho	Moscow: University of Idaho Library	(208) 885-6235
Illinois	Chicago Public Library	(312) 747-4450
	Springfield: Illinois State Library	(217) 782-5659
Indiana	Indianapolis-Marion County Public Library	(317) 269-1741
	West Lafayette Siegesmund Engineering Library, Purdue University	(765) 494-2872
Iowa	Des Moines: State Library of Iowa	(515) 281-4118
Kansas	Wichita: Ablah Library, Wichita State University	(316) 978-3155
Kentucky	Louisville Free Public Library	(502) 574-1611
Louisiana	Baton Rouge: Troy H. Middleton Library, Louisiana State University	(504) 388-8875
Maine	Orono: Raymond H. Fogler Library, University of Maine	(207) 581-1678
Maryland	College Park: Engineering and Physical Sciences Library, University of Maryland	(301) 405-9157
Massachusetts	Amherst: Physical Sciences Library, University of Massachusetts	(413) 545-1370
	Boston Public Library	(617) 536-5400 Ext. 265
Michigan	Ann Arbor: Media Union Library, University of Michigan	(313) 647-5735
	Big Rapids: Abigail S. Timme Library, Ferris State University	(616) 592-3602
	Detroit: Great Lakes Patent and Trademark Center	(313) 833-3379
Minnesota	Minneapolis Public Library and Information Center	(612) 630-6120
Mississippi	Jackson: Mississippi Library Commission	(601) 359-1036
Missouri	Kansas City: Linda Hall Library	(816) 363-4600
	St. Louis Public Library	(314) 241-2288 Ext. 390
Montana	Butte: Montana College of Mineral Science and Technology Library	(406) 496-4281
Nebraska	Lincoln: Engineering Library, University of Nebraska-Lincoln	(402) 472-3411
Nevada	Reno: University of Nevada, Reno Library	(702) 784-6500 Ext. 257
New Hampshire	Concord: New Hampshire State Library	(603) 271-2239

Reference Collections of U.S. Patents and Trademarks Available for Public Use in Patent and Trademark Depository Libraries—(continued)

State	*Name of Library*	*Telephone Contact*
New Jersey	Newark Public Library	(201) 733-7782
	Piscataway: Library of Science and Medicine, Rutgers University	(908) 445-2895
New Mexico	Albuquerque: University of New Mexico General Library	(505) 277-4412
New York	Albany: New York State Library	(518) 474-5355
	Buffalo and Erie County Public Library	(716) 858-7101
	New York Public Library (The Research Libraries)	(212) 592-7000
	Stony Brook: Engineering Library, State University of New York	Not Yet Operational
North Carolina	Raleigh: D.H. Hill Library, North Carolina State University	(919) 515-3280
North Dakota	Grand Forks: Chester Fritz Library, University of North Dakota	(701) 777-4888
Ohio	Akron - Summit County Public Library	(330) 643-9075
	Cincinnati and Hamilton County, Public Library of	(513) 369-6971
	Cleveland Public Library	(216) 623-2870
	Columbus: Ohio State University Libraries	(614) 292-6175
	Toledo/Lucas County Public Library	(419) 259-5212
Oklahoma	Stillwater: Oklahoma State University Center for International Trade Development	(405) 744-7086
Oregon	Portland: Paul L. Boley Law Library, Lewis & Clark College	(503) 768-6786
Pennsylvania	Philadelphia, The Free Library of	(215) 686-5331
	Pittsburgh, Carnegie Library of	(412) 622-3138
	University Park: Pattee Library, Pennsylvania State University	(814) 865-4861
Puerto Rico	Mayaquez General Library, University of Puerto Rico	(787) 832-4040 Ext. 3459
Rhode Island	Providence Public Library	(401) 455-8027
South Carolina	Clemson University Libraries	(864) 656-3024
South Dakota	Rapid City: Devereaux Library, South Dakota School of Mines and Technology	(605) 394-1275
Tennessee	Memphis & Shelby County Public Library and Information Center	(901) 725-8877
	Nashville: Stevenson Science Library, Vanderbilt University	(615) 322-2717
Texas	Austin: McKinney Engineering Library, University of Texas at Austin	(512) 495-4500
	College Station: Sterling C. Evans Library, Texas A & M University	(409) 845-3826
	Dallas Public Library	(214) 670-1468
	Houston: The Fondren Library, Rice University	(713) 527-8101 Ext. 2587
	Lubbock: Texas Tech University	(806) 742-2282
Utah	Salt Lake City: Marriott Library, University of Utah	(801) 581-8394
Vermont	Burlington: Bailey/Howe Library, University of Vermont	(802) 656-2542
Virginia	Richmond: James Branch Cabell Library, Virginia Commonwealth University	(804) 828-1104
Washington	Seattle: Engineering Library, University of Washington	(206) 543-0740
West Virginia	Morgantown: Evansdale Library, West Virginia University	(304) 293-2510 Ext. 113
Wisconsin	Madison: Kurt F. Wendt Library, University of Wisconsin Madison	(608) 262-6845
	Milwaukee Public Library	(414) 286-3051
Wyoming	Casper: Natrona County Public Library	(307) 237-4935

PATENT EXAMINING CORPS

BRUCE A. LEHMAN, Commissioner
LAWRENCE J. GOFFNEY Jr., Assistant Commissioner for Patents
EDWARD R. KAZENSKE, Deputy Assistant Commissioner for Patents
STEPHEN G. KUNIN, Deputy Assistant Commissioner for Patent Policy

PATENT EXAMINING GROUPS	Phone number Area Code 703	New Case Date*
CHEMICAL EXAMINING GROUPS		
GENERAL METALLURGICAL, INORGANIC, PETROLEUM AND ELECTRICAL CHEMISTRY, ENGINEERING AND DESIGNS, GROUP 1100—THEODORE MORRIS, Director	308-0661	12/28/95
ORGANIC CHEMISTRY, DRUG, BIO-AFFECTING AND BODY TREATING COMPOSITION, GROUP 1200/2900—JOHN E. KITTLE, Director	308-1235	04/12/96
SPECIALIZED CHEMICAL INDUSTRIES AND CHEMICAL ENGINEERING, GROUP 1300—RICHARD V. FISHER, Director	308-0651	03/11/96
HIGH POLYMER CHEMISTRY, PLASTICS, COATING, PHOTOGRAPHY STOCK MATERIALS AND COMPOSITIONS, GROUP 1500—MARY LEE, Acting Director	308-2351	03/20/96
BIOTECHNOLOGY, GROUP 1800—JOHN J. DOLL, Director	308-0196	07/06/95
ELECTRICAL EXAMINING GROUPS		
INDUSTRIAL ELECTRONICS, PHYSICS AND RELATED ELEMENTS, GROUP 2100—STEWART LEVY, Director	308-1782	09/15/95
SPECIAL LAWS AND ADMINISTRATION, GROUP 2200—ROBERT E. GARRETT, Director	308-0511	12/08/95
COMPUTER SYSTEMS AND COMPUTER APPLICATION, GROUP 2300—JOSEPH J. ROLLA, Director	305-3900	12/08/95
SPECIAL COMPUTER APPLICATIONS: COMPUTER GRAPHICS, BUSINESS PRACTICES, & DIAGNOSTIC TESTING, GROUP 2400—GERALD GOLDBERG, Director	305-3900	10/26/95
ELECTRONIC AND OPTICAL SYSTEMS AND DEVICES, GROUP 2500—JANICE A. HOWELL, Director	308-0956	02/12/96
TELECOMMUNICATIONS, GROUP 2600—NICHOLAS P. GODICI, Director	305-3900	05/31/95
DESIGN, GROUP 2900—JOHN E. KITTLE, Director	308-0661	12/08/95
MECHANICAL EXAMINING GROUPS		
HANDLING AND TRANSPORTATION MEDIA, GROUP 3100—JOHN F. TERAPANE, JR., Director	308-1113	10/19/95
MATERIAL SHAPING, ARTICLE MANUFACTURING AND TOOLS, GROUP 3200—ETHEL CROSS, Director	308-1148	04/02/96
MEDICAL INSTRUMENTS, DIAGNOSTIC EQUIPMENT AND TREATMENT DEVICES; SURGERY AND SURGICAL SUPPLIES; AMUSEMENT AND EXERCISING DEVICES; ANIMAL HUSBANDRY; SPORTING GOODS; TOBACCO PRODUCTS AND MANUFACTURING EQUIPMENT; AND PRINTING, GROUP 3300—J.J. LOVE, Director	308-0858	11/29/95
SOLAR, HEAT, POWER, AND FLUID ENGINEERING DEVICES, GROUP 3400—DONALD G. KELLY, Director	308-0861	12/04/95
GENERAL CONSTRUCTION, PETROLEUM AND MINING ENGINEERING, GROUP 3500—A.L. SMITH, Director	308-2168	07/16/96

*A communication from the examiner should have been received in most applications filed prior to this date.

Patents will Expire as Follows:

(1) The term of any utility or plant patent that is in force on or results from an application filed before June 8, 1995 is the greater of the 20 year term provided in 35 U.S.C. 154(a)(2) or 17 years from grant subject to any terminal disclaimers. 35 U.S.C. 154(c)(1).

(2) All utility and plant patents granted on applications having an actual United States filing date on or after June 8, 1995 are granted for a term which begins on the date on which the patent is granted and ends 20 years from the date on which the application was filed in the United States. If the application contains a specific reference to an earlier application under 35 U.S.C. 120, 121 or 365(c), the patent term ends twenty years from that date on which the earliest application was filed. 35 U.S.C. 154(a)(2).

(3) All design patents are granted for a term of 14 years from the date of the grant.

However, the term of any patent may have been curtailed by disclaimer under the provisions of 35 U.S.C. 153, have lapsed due to failure to pay maintenance fees, or have been extended under the provisions of 35 U.S.C. 154, 155, or 156. Thus, if more reliable information is needed with respect to a particular patent, then the specific patent file should be reviewed to determine the actual date of patent expiration.

TRADEMARK OPERATION

Bruce A. Lehman, Commissioner
Philip G. Hampton, II, Assistant Commissioner
Robert M. Anderson, Deputy Assistant Commissioner
David E. Bucher, Director, Trademark Examining Office
Condition of Trademark Applications as of November 1, 1997

Law Office	Oldest Date: New*	Oldest Date: Amendment Filed
Law Office 101—Ron Williams, Managing Attorney, (703) 308-9101—4th Floor Foods, Beverages, Wines & Spirits—Int. Classes 29, 30, 31, 32, 33 Services—Int. Classes 35, 36, 37, 38, 39, 40, 41, 42	05/16/97	09/29/97
Law Office 102—Myra Kurzbard, Managing Attorney, (703) 308-9102—5th Floor Scientific Equipment & Furniture—Int. Classes 9, 20 Services—Int. Classes 35, 36, 37, 38, 39, 40, 41, 42	04/03/97	08/18/97
Law Office 103—Michael A. Szoke, Acting Managing Attorney, (703) 308-9103—5th Floor Scientific Equipment & Furniture—Int. Classes 9, 20 Services—Int. Classes 35, 36, 37, 38, 39, 40, 41, 42	04/11/97	10/02/97
Law Office 104—Sidney Moskowitz, Managing Attorney, (703) 308-9104—6th Floor Unwrought metals, Industrial Equipment, Tools, Installation, Vehicles, Firearms, Musical Instruments, Building Materials & Floor Coverings—Int. Classes 6, 7, 8, 11, 12, 13, 15, 19, 27 Services—Int. Classes 35, 36, 37, 38, 39, 40, 41, 42	03/20/97	08/22/97
Law Office 105—Thomas Howell, Managing Attorney, (703) 308-9105—6th Floor Chemicals, Paints, Lubricants, Pharmaceuticals, Medical Apparatus & Tobacco—Int. Classes 1, 2, 4, 5, 10, 34 Services—Int. Classes 35, 36, 37, 38, 39, 40, 41, 42	04/16/97	08/28/97
Law Office 106—Mary Sparrow, Managing Attorney, (703) 308-9106—7th Floor Cosmetics, Cleaning Preparations, Paper Products & Toys—Int. Classes 3, 16, 28 Services—Int. Classes 35, 36, 37, 38, 39, 40, 41, 42	04/16/97	08/07/97
Law Office 107—Thomas Lamone, Managing Attorney, (703) 308-9107—7th Floor Cosmetics, Cleaning Preparations, Paper Products & Toys—Int. Classes 3, 16, 28 Services—Int. Classes 35, 36, 37, 38, 39, 40, 41, 42	06/24/97	09/19/97
Law Office 108—David Shallant, Managing Attorney, (703) 308-9108—8th Floor Precious metals, Fibers, Leather goods, Housewares, Cordage, Yarns, Fabrics, Clothing & Notions— Int. Classes 14, 17, 18, 21, 22, 23, 24, 25, 26 Services-Int. Classes 35, 36, 37, 38, 39, 40, 41, 42	03/20/97	08/14/97
Law Office 109—Deborah Cohn, Managing Attorney, (703) 308-9109—8th Floor Precious metals, Fibers, Leather goods, Housewares, Cordage, Yarns, Fabrics, Clothing & Notions—Int. Classes 14, 17, 18, 21, 22, 23, 24, 25, 26 Services—Int. Classes 35, 36, 37, 38, 39, 40, 41, 42	02/20/97	09/15/97
**Collective Marks—Class 200 **Certification Marks—Classes A & B		
Office of Trademark Services—Tearon Simms, Director, (703) 308-9100 Trademark Assistance Center—(703) 308-9000 Pre-Examination—Alan Lambert, Supervisor, (703) 308-9401 ext. 188 Intent-To-Use—(ITU)—(703) 308-9500 Post Registration Section—Mary Bowman, Supervisor, (703) 308-9500 ext. 126		
Affidavits Under Sections 8 & 15 (All Classes)	09/23/97	—0—
Renewals (All Classes)	09/23/97	—0—
Section 12(c) Publications (All Classes)	09/23/97	—0—

1. ** Assigned to all Law Office

2. Applicants with inquiries concerning the status of their applications and a touch telephone should call (703) 305-8747 from 6:30 a.m. to Midnight EST, Monday through Friday. This automated voice system will provide the current status of your application. Applicants are urged not to file unnecessary inquiries concerning the status of their applications. See SECTION 411 of the TRADEMARK MANUAL OF EXAMINING PROCEDURE.

3. * These dates identify the oldest unassigned new case in each Law Office. All cases with earlier dates have either been examined and made the subject of an action or are currently being worked on by the assigned examining attorney.

REEXAMINATIONS

DECEMBER 23, 1997

Matter enclosed in heavy brackets [ ] appears in the patent but forms no part of this reexamination specification; matter printed in italics indicates additions made by reexamination.

B1 4,587,796 (3399th)
PACKAGING MACHINE

Matti Halolla, Mynämäki, Finland, assignor to Newtec International S.A., Aix-les-Bains Cedex, France
Reexamination Request No. 90/004,456, Nov. 19, 1996.
Reexamination Certificate for Patent 4,587,796, issued May 13, 1986, Ser. No. 602,007, Apr. 19, 1984.
Claims priority, application Finland, Apr. 21, 1983, 831375
Int. Cl.^{6} ~~B65B~~ *13/04*
U.S. Cl. 53—588

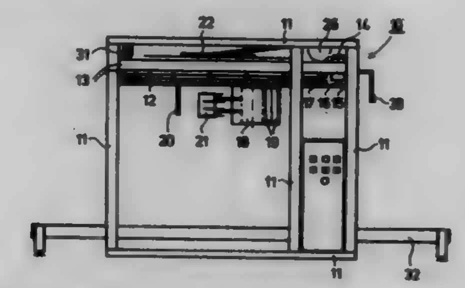

AS A RESULT OF REEXAMINATION, IT HAS BEEN DETERMINED THAT:

Claims 1–3, 5 and 6 are determined to be patentable as amended.

Claim 4, dependent on an amended claim, is determined to be patentable.

New claims 7–17 are added and determined to be patentable.

1. Apparatus for packaging articles in film material, comprising:
a first *stationary* frame structure *comprising a plurality of vertical components defining a surrounding perimeter about a wrapping station* adapted to receive an article to be wrapped in film material while [the] *said* article is maintained stationary;
a second non-rotating support frame mounted in said first *stationary* frame structure [for] *in such a manner as to be guided by said plurality of vertical components of said first stationary frame structure as said second non-rotating support frame undergoes* reciprocating [movement] *vertical movements* in [up] *upward* and [down] *downward* directions [and] *with respect to said first stationary frame structure;*
means for selectively raising and lowering said second *non-rotating* support frame *with respect to said first stationary frame structure*;
a *third* frame assembly rotatably mounted on said second non-rotating support frame so as to be raised and lowered [therewith] *along with said second non-rotating support frame with respect to said first stationary frame structure*; [and]
means mounted on said second non-rotating support frame for rotating said *third* rotatable frame assembly;
a roll of film material mounted on said *third* rotatable frame assembly; and
means mounted on said *third* rotatable frame assembly for maintaining tension in [the] *said* film material as [the] *said* film material is [payed] *paid* out from said *roll of* film material [roll].

B1 4,806,123 (3400th)
ELECTRICAL CONNECTOR DEVICE WITH A NUMBER OF TERMINALS

Kenjiro Konishi, Hiratsuka, and Ken Obata, Tokyo, both of Japan, assignors to Furukawa Electric Co., Ltd., Tokyo, Japan
Reexamination Request No. 90/004,379, Oct. 11, 1996.
Reexamination Certificate for Patent 4,806,123, issued Feb. 21, 1989, Ser. No. 149,107, Jan. 27, 1988.
Claims priority, application Japan, Feb. 3, 1987, 62-13827 U; Feb. 4, 1987, 62-24274; Mar. 9, 1987, 62-33150 U
Int. Cl.^{6} H01R *13/44*
U.S. Cl. 439—595

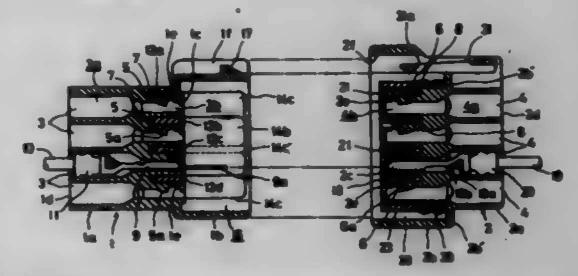

AS A RESULT OF REEXAMINATION, IT HAS BEEN DETERMINED THAT:

Claim 1 is determined to be patentable as amended.

Claims 2–13 dependent on an amended claim are determined to be patentable.

1. An electrical connector device comprising:
a male *terminal* housing formed with a plurality of male-terminal chambers adapted individually to contain male terminals;
a female *terminal* housing formed with female-terminal chambers as many as said male-terminal chambers, said female-terminal chambers corresponding individually to said male-terminal chambers and adapted individually to contain female terminals connected to said male terminals corresponding thereto;
male-terminal seating detecting means; and
female-terminal seating detecting means,
said male *terminal* housing including first retaining means, protruding in the form of a cantilever from each of partition walls, which define said male-terminal chambers of said male terminal housing, and resiliently bendable in a first flexure space, whereby said male terminals contained in said male-terminal chambers are prevented from slipping out therefrom as said male terminals engage said first retaining means,
said female *terminal* housing including second retaining means, protruding in the form of a cantilever from each of partition walls, which define said female-terminal chambers of said female *terminal* housing, and resiliently bendable in a second flexure space, whereby said female terminals contained in said female-terminal chambers are prevented from slipping out therefrom as said female terminals engage said second retaining means,
said male-terminal seating detecting means being adapted to be fitted into said first flexure space when said male terminals are contained in their corresponding male-terminal chambers in a manner such that said male terminals normally engage said first retaining means, and
said female-terminal seating detecting means being adapted to be fitted into said second flexure space, *when said male and female terminal housings are not connected to one another, and* when said female terminals are contained in their corresponding female-terminal chambers in a manner such that said female-terminals normally engage said second retaining means, characterized in that:
said male-terminal seating detecting means includes at least one integral planar portion adapted to extend parallel to said male

terminals, from a connection-side end face of said male *terminal* housing toward said female *terminal* housing, when said male-terminal seating detecting means is fitted normally in said first flexure space, an extended end of said planar portion being situated nearer to said female *terminal* housing than the distal ends of said male terminals are, thereby protecting said male terminals from collision with objects running toward said male terminals, *wherein said male terminal seating detecting means includes a generally planar wall portion connected in a generally perpendicular relationship to said planar portion and being parallel with said male terminals and closely positioned in said first flexure space;* and

said female *terminal* housing has at least one fitting groove bored herein [so as to] open to a connection-side end face thereof and adapted to receive said planar portion.

B1 4,930,544 (3401st)

DOUBLE-CONTAINMENT THERMOPLASTIC PIPE ASSEMBLY

Christopher G. Ziu, Charlestown, Mass., assignor to Asahi/America, Inc., Medford, Mass.

Reexamination Request No. 90/002,336, May 1, 1991.

Reexamination Certificate for Patent 4,930,544, issued Jun. 5, 1990, Ser. No. 260,444, Oct. 20, 1988.

Division of Ser. No. 66,936, Jun. 25, 1987, Pat. No. 4,786,088.

Int. Cl.⁶ F16L *9/18*

U.S. Cl. 138—113

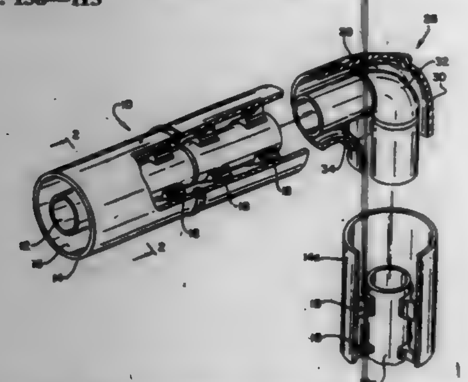

AS A RESULT OF REEXAMINATION, IT HAS BEEN DETERMINED THAT:

The patentability of claims **1–5** is confirmed.

New claim **6** is added and determined to be patentable.

1. A restraint coupling for a double-containment pipe assembly, said pipe assembly comprising a pair of spaced apart axially aligned inner carrier pipes of a first diameter and a pair of spaced apart axially aligned outer containment pipes of a second diameter, said second diameter being greater than said first diameter such that a generally annular space exists between the inner and outer pipes, said restraint coupling being formed from a thermoplastic material of unitary construction and comprising a continuous generally cylindrical containment portion defining a diameter substantially equal to the second diameter and having opposed axial ends for end-to-end axial alignment with the containment pipes, a generally cylindrical carrier portion defining a diameter substantially equal to the first diameter disposed within and generally parallel to said containment portion, said carrier portion having opposed axial ends for end-to-end axial alignment with the carrier pipes, and a connecting portion rigidly extending between and connecting said containment and carrier portions, said containment and carrier portions having longitudinal lengths greater than the length of said connecting portion, said carrier portion extending in opposed axial directions from the connecting portion distances that are at least equal to distances by which the containment portion extends axially from the connecting portion, whereby the carrier portion and the containment portion of the restraint coupling can be fused in end-to-end relationship with carrier and containment pipes of the double-containment pipe assembly.

B1 4,961,230 (3402nd)

HEARING AID PROGRAMMING INTERFACE

Rolf C. Rising, Kungbacka, Sweden, assignor to Minnesota Mining and Manufacturing Company, St. Paul, Minn.

Reexamination Request No. 90/004,169, Feb. 14, 1996.

Reexamination Certificate for Patent 4,961,230, issued Oct. 2, 1990, Ser. No. 192,242, May 10, 1988.

Int. Cl.⁶ H04R *25/02*

U.S. Cl. 381—69.2

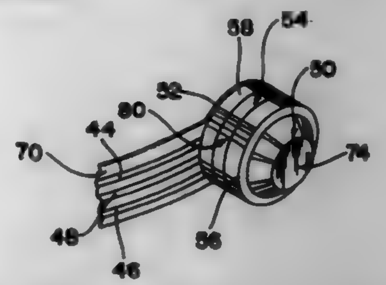

AS A RESULT OF REEXAMINATION, IT HAS BEEN DETERMINED THAT:

The patentability of claims **5** and **8** is confirmed.

Claims **1–4**, **6**, **7**, **9** and **10** are cancelled.

5. The programmable hearing aid system of claim 3, wherein said coupling member is generally disk-shaped, said positive and negative electrodes are positioned on opposite surfaces of said coupling member, and said programming electrode is positioned intermediate said positive and negative electrodes on a circumferential surface of said coupling member.

8. A coupling member according to claim 7, wherein said coupling member is generally disk-shaped, said positive and negative electrodes are positioned on an exterior surface of said coupling member generally opposite one another on said coupling member, and said programming electrode is positioned intermediate said positive and negative electrodes on a circumferential surface of said coupling member.

B1 5,255,096 (3403rd)

VIDEO TIME CODE SYNCHRONIZED ROBOT CONTROL APPARATUS

William M. Boyle, 2092 Saint Andrews, Rochester Hills, Mich. 48309

Reexamination Request No. 90/004,536, Feb. 3, 1997.

Reexamination Certificate for Patent 5,255,096, issued Oct. 19, 1993, Ser. No. 866,446, Apr. 10, 1992.

Int. Cl.⁶ H04N *7/18*

U.S. Cl. 348—95

AS A RESULT OF REEXAMINATION, IT HAS BEEN DETERMINED THAT:

The patentability of claims **1–14** is confirmed.

1. A video time code synchronized robot control apparatus comprising:

a robot including an arm movable through a path of movement;

a video camera, mounted on the arm of the robot, for generating video signals during operation of the video camera;

time code generator means for generating time code information;

video image storing means, responsive to the video signals from the video camera and the time code information from the time code generator means for storing a composite signal formed of the video signals and the time code information on a storage medium;

time code reader means, responsive to the composite video signal from the video image storing means, for decoding the time code information for each frame of the composite signal; and

robot controller means for controlling the path of movement of the robot arm in accordance with a stored control program,

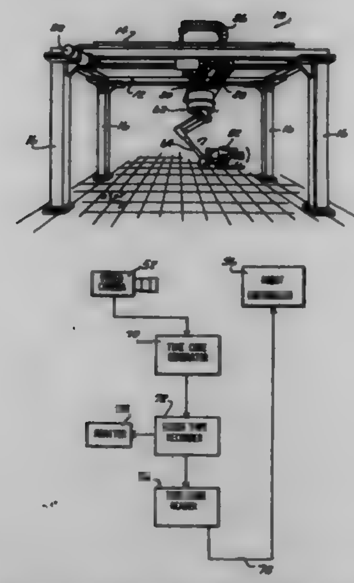

the robot controller means being responsive to the time code information for storing the position coordinates of the robot arm along the path of movement for each distinct time code associated with the video signal on a video signal frame by frame basis and for synchronizing the movement of the robot arm along its predetermined path of movement with the time code information during the generation of video signals and time code information from the storage medium on a frame-by-frame basis.

B1 5,396,737 (3404th)

COMPOUND, GLAZING OR POLISHING PAD

Richard L. Englund, Maplewood, Minn., and Thomas W. Schwartz, Troy Township, St. Croix County, Wis., assignors to Minnesota Mining and Manufacturing Company, Saint Paul, Minn.

Reexamination Request No. 90/004,376, Oct. 4, 1996.

Reexamination Certificate for Patent 5,396,737, issued Mar. 14, 1995, Ser. No. 286,410, Aug. 5, 1994.

Continuation of Ser. No. 923,821, Aug. 3, 1992, abandoned, which is a continuation of Ser. No. 624,399, Dec. 7, 1990, Pat. No. 5,185,964, which is a division of Ser. No. 458,411, Dec. 28, 1989, Pat. No. 5,007,128, which is a continuation-in-part of Ser. No. 298,508, Jan. 18, 1989, Pat. No. 4,962,562.

The portion of the term of this patent subsequent to Jan. 18, 2009, has been disclaimed.

Int. Cl.⁶ B24B *1/00*

U.S. Cl. 451—28

AS A RESULT OF REEXAMINATION, IT HAS BEEN DETERMINED THAT:

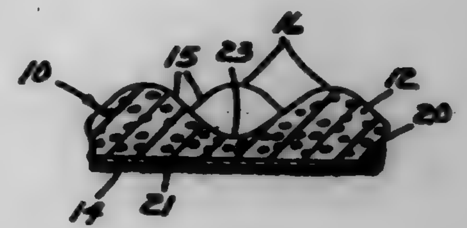

The patentability of claims **1–4** is confirmed.

New claims **5–14** and **15** are added and determined to be patentable.

5. A paint finishing method for applying compounding or glazing material to an exposed surface of paint to remove imperfections from or polish the surface of the paint, the method comprising the steps of:

providing a paint finishing pad comprising a resiliently compressible layer of open cell polymeric foam having a generally planar rear surface, the layer of foam comprising a plurality of projecting portions projecting a first distance at a right angle from the rear surface, and a plurality of recessed portions spacing the projecting portions and projecting a second distance at a right angle from the rear surface which second distance is significantly less than the first distance, the projecting and recessed portions at least partially defining a front surface for the layer of foam opposite the rear surface;

applying the compounding or glazing material to the surface of the paint;

rapidly moving by machine the front surface of the layer of foam over the surface of the paint with the material between the front surface of the layer of foam and the surface of the paint; and

manually pressing the layer of foam against the surface of the paint during the rapidly moving step with a force sufficient to compress at least portions of the layer of foam toward the rear surface of the layer of foam and cause at least parts of the front surface of the layer of foam defined by the projecting portions to generally conform to the surface of the paint and press the material into engagement with the surface of the paint for removal of imperfections from or polishing of the surface of the paint.

REISSUES

DECEMBER 23, 1997

Matter enclosed in heavy brackets [ ] appears in the original patent but forms no part of this reissue specification; matter printed in italics indicates additions made by reissue.

Re. 35,696
HEAT INJECTION PROCESS

Thomas Mikus, Houston, Tex., assignor to Shell Oil Company, Houston, Tex.

Original No. 5,255,742, dated Oct. 26, 1993, Ser. No. 896,861, Jun. 12, 1992. Application for reissue Sep. 28, 1995, Ser. No. 534,902

Int. Cl.[6] E21B *36/02*

U.S. Cl. 166—303 **9 Claims**

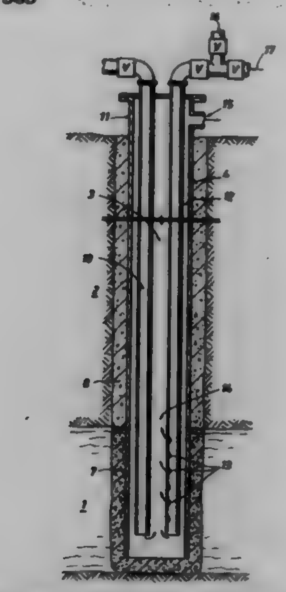

9. A method of supplying heat using a flameless combustor, the method comprising:

combining a hydrocarbon fuel gas with a carbon formation suppressant;

passing the fuel gas and carbon formation suppressant mixture through a fuel gas conduit to a mixing point within the flameless combustor;

passing a combustion air stream though an air conduit to the mixing point;

preheating either the fuel gas and carbon formation suppressant mixture, the combustion air stream or both such that the temperature of a mixture of the streams exceeds an autoignition temperature of the mixture of the streams; and

combining the preheated combustion air and fuel gas and carbon formation suppressant at the mixing point resulting in autoignition forming combustion products,

wherein the amount of the carbon formation suppressant combined with the fuel gas exceeds that which prevents carbon formation at the temperature of the preheated fuel gas and carbon suppressant mixture.

Re. 35,697
UNIT FOR AMPLIFYING LIGHT SIGNALS IN OPTICAL FIBER TRANSMISSION LINES

Giorgio Grasso, Monza, and Aldo Righetti, Milan, both of Italy, assignors to Pirelli Cavi S.p.A., Milan, Italy

Original No. 5,204,923, dated Apr. 20, 1993, Ser. No. 839,056, Feb. 18, 1992. Continuation of Ser. No. 552,918, Jul. 16, 1990, abandoned. Application for reissue Apr. 20, 1995, Ser. No. 425,390

Int. Cl.[6] G02B *6/28*

U.S. Cl. 385—24 **33 Claims**

6. An optical signal transmission system for transmitting optical signals in a long distance optical fiber transmission line system comprising:

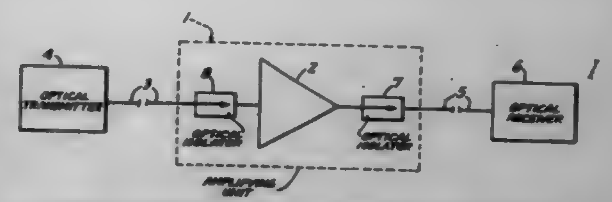

an optical amplifier for amplifying optical signals and having an input and an output;

a first optical transmission line fiber having a first end and a second, other end;

a second optical transmission line fiber having a second line fiber having a first end and having a second, other end;

said amplifier input being optically connected to said first line fiber second end and said amplifier output being optically connected to said second line fiber first end;

such optical amplifier being affected by interferometric noise due to interference or beat phenomena and having a gain greater than 15 dB;

at least one of said first optical transmission line fiber and said second optical transmission line fiber having a length between the first end and second end thereof such as to have noise signals caused by back diffusion of light arising inside said one line fiber of such intensity as to generate interferometric noise in said optical amplifier and such that a signal in attenuated by travelling from one end to the other end of said one line fiber;

a unidirectional optical isolator optically connected in series between said amplifier and said one of said first and second transmission line fibers so as to substantially prevent said noise signals from generating interferometric noise in said optical amplifier while transmitting said optical signals;

such unidirectional optical isolator having a reflectivity lower than the reflectivity due to Rayleigh scattering in said one line fiber;

and the optical transmission system being such that, in absence of such at least one unidirectional optical isolator, said optical signals and interferometric noise would be transmitted in said second line fiber.

Re. 35,698
DONOR ROLL FOR SCAVENGELESS DEVELOPMENT IN A XEROGRAPHIC APPARATUS

Thomas J. Behe, Webster; Jeffrey J. Folkins; Gerald T. Lioy, both of Rochester; Grace T. Brewington, Fairport; Joseph G. Schram, Liverpool, and William H. Wayman, Ontario, all of N.Y., assignors to Xerox Corporation, Stamford, Conn.

Original No. 5,245,392, dated Sep. 14, 1993, Ser. No. 955,965, Oct. 2, 1992. Application for reissue Sep. 14, 1995, Ser. No. 527,987

Int. Cl.[6] G03G *15/06*

U.S. Cl. 399—286 **44 Claims**

1. An apparatus for developing an electrostatic latent image, comprising:

a housing defining a chamber for storing a supply of developer material therein;

a donor roll, having an outer surface [including phenolic resin], mounted at least partially in the chamber of said housing, said donor roll being adapted to advance developer material to the latent image, with the discharge time constant of the surface of the donor roll being less than 300 microseconds; and

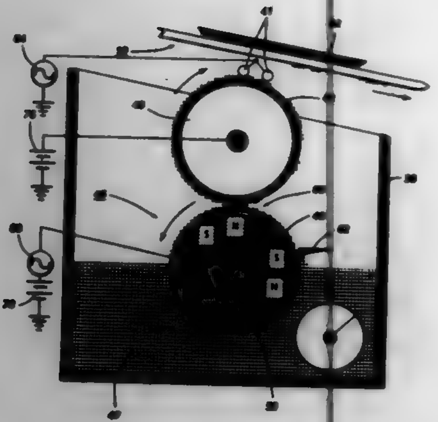

an electrode member positioned in the space between the latent image and the donor roll, the electrode member being closely spaced from the donor roll and being electrically biased to detach toner particles from the donor roll so as to form a toner powder cloud in the space between the electrode member and the latent image with detached toner particles from the toner cloud developing the latent image.

Re. 35,699
PROCESS TO CORRECT AND OPTIMIZE THE COMPOSITION OF FEED

Stefan Lange, Gothenburg; Ivar Lonnroth, Molndal; Kjell Martinsson, Hassleholm, and Leif Goransson, Kagerod, all of Sweden, assignors to Svenska Lantmannens Riksforbund UPA, Stockholm, Sweden
PCT No. PCT/SE91/00003, § 371 Date Aug. 13, 1992, § 102(e) Date Aug. 13, 1992, PCT Pub. No. WO91/09536, PCT Pub. Date Jul. 11, 1991
Original No. 5,296,243, dated Mar. 22, 1994, Ser. No. 854,632, Jan. 3, 1991. This PCT application Jan. 3, 1991, Ser. No. 556,239
Claims priority, application Sweden, Jan. 4, 1990, 9000028
Int. Cl.[6] A23K *1/00*
U.S. Cl. 426—2 **11 Claims**

1. A process to correct and optimize the composition of a feed in order to increase the daily growth of animals which comprises including in the animal's feed a sufficient quantity of at least one material selected from the group consisting of sugars, sugar alcohols, amino acids and amides so that 1.0 ml of that animal's blood will contain at least 0.5 units of lectines, which in a [0.05M]*0.15M* sodium chloride and [0.15M] *0.05M* sodium phosphate buffer and at a pH of 7 will attach with high affinity to agarose and which will dissociate from the agarose after the addition of 1 M-α-methyl-D-glucoside.

PLANT PATENTS

GRANTED DECEMBER 23, 1997

Illustrations for plant patents are usually in color and therefore it is not practicable to reproduce the drawing.

10,155
GRANDIFLORA ROSE VARIETY NAMED 'TWOFAVOR'
Jerry Twomey, Watsonville, Calif., assignor to DeVor Nurseries, Inc., Watsonville, Calif.
Filed Mar. 31, 1995, Ser. No. 415,171
Int. Cl.[6] A01H *5/00*
U.S. Cl. Plt.—18 **1 Claim**

1. A new and distinct grandiflora rose plant variety, substantially as shown and described.

10,156
LANTANA PLANT NAMED 'ROBPATDES'
Robert J. Roberson, 31706 E. Pink Hill Rd., Grain Valley, Jackson County, Mo. 64029
Filed Jun. 28, 1996, Ser. No. 674,597
Int. Cl.[6] A01H *5/00*
U.S. Cl. Plt.—54.1 **1 Claim**

1. A new and distinct cultivar of *Lantana camara* plant, substantially as described herein, characterized particularly as to novelty by the growth vigor, the rapid woody trunk, the intensity of bloom color pigment, the dramatic multi-colored bloom display, and the very lush and deep green foliage.

10,157
***NERIUM OLEANDER* PLANT 'TURNER'S 5-387'**
Ted Leon Turner, Sr., 6503 S.P.I.D., Corpus Christi, Tex. 78412
Filed Aug. 19, 1996, Ser. No. 699,404
Int. Cl.[6] A01H *5/00*
U.S. Cl. Plt.—54.1 **1 Claim**

1. A new and distinct variety of intermediate size *Nerium oleander* plant substantially as shown and described, having an upright habit of fairly rapid growth making it especially suitable for hedges, having an ability to be asexually reproduced, having the ability to flower substantially the entire year with long continuous blooming periods, having the ability to grow in full sun or in partial shade, being an excellent greenhouse plant, and being particularly characterized by its intermediate size combined with the unique color of its inflorescence, the flowers being a medium pink color, the margins being pinkish red, and with flowers having a sweet fragrance.

10,158
AZALEA PLANT NAMED KARMA
Karl Glaser, Alte Strasse 9, D-64832 Babenhausen, Germany
Filed May 22, 1996, Ser. No. 651,723
Int. Cl.[6] A01H *5/00*
U.S. Cl. Plt.—56 **1 Claim**

1. A new and distinct cultivar of azalea plant named Karma as described and illustrated.

10,159
SAINTPAULIA PLANT NAMED 'DUSK'
John Van Wingerden, Oberlin, Ohio, assignor to Green Circle Growers, Inc., Oberlin, Ohio
Filed Jul. 1, 1996, Ser. No. 673,499
Int. Cl.[6] A01H *5/00*
U.S. Cl. Plt.—69.2 **1 Claim**

1. A new and distinct Saintpaulia plant named 'Dusk', as illustrated and described.

10,160
POINSETTIA PLANT 'PEARL'
Peter Jacobsen, deceased, late of Skibby, Denmark, by Aase Jacobsen, executrix, assignor to Paul Ecke Ranch, Inc., Encinitas, Calif.
Filed Apr. 10, 1996, Ser. No. 630,433
Int. Cl.[6] A01H *5/00*
U.S. Cl. Plt.—86.2 **1 Claim**

1. A new and distinct Poinsettia plant, substantially as herein shown and described, distinguished by its strong thick stems, large white bracts, self branching, large leaves and good leaf and bract retention in the consumer environment.

10,161
POINSETTIA PLANT NAMED 'DARLYNE'
Eduard Gross, Blanzac, France, assignor to Paul Ecke Ranch, Inc., Encinitas, Calif.
Filed Apr. 4, 1996, Ser. No. 627,651
Int. Cl.[6] A01H *5/00*
U.S. Cl. Plt.—86.3 **1 Claim**

1. A new and distinct cultivar of poinsettia plant, substantially as herein shown and described, distinguished by its strong stems, unique raspberry pink flower bracts, self branching and good leaf and bract retention in the consumer environment.

10,162
POINSETTIA PLANT 'RED BARON'
Eduard Gross, Nanteuillet, France, assignor to Paul Ecke Ranch, Inc., Encinitas, Calif.
Filed Apr. 4, 1996, Ser. No. 630,896
Int. Cl.[6] A01H *5/00*
U.S. Cl. Plt.—86.4 **1 Claim**

1. A new and distinct variety of Poinsettia plant, substantially as herein shown and described, distinguished by its strong stems, thick waxy dark red flower bracts, self branching and good leaf and bract retention in the consumer environment.

10,163
POINSETTIA PLANT 'SOPHIE'
Eduard Gross, Nanteuillet, France, assignor to Paul Ecke Ranch, Inc., Encinitas, Calif.
Filed Apr. 4, 1996, Ser. No. 630,904
Int. Cl.[6] A01H *5/00*
U.S. Cl. Plt.—86.4 **1 Claim**

1. A new and distinct variety of Poinsettia plant, substantially as herein shown and described, distinguished by its strong even growth habit, rounded red flower bracts, self branching and good leaf and bract retention in the consumer environment.

VOL 12 05 ISS 4 DE 23, 1997 UMI

PATENTS

GRANTED December 23, 1997

ERRATA

For CLASS		See PATENT NO.
224–564	....	5,699,985
204–469	....	5,700,365
156–561	....	5,701,101
359–644	....	5,701,475
395–849	....	5,701,546

PATENTS

GRANTED DECEMBER 23, 1997

GENERAL AND MECHANICAL

5,699,555
CHILD'S WAISTBELT AND LEASH FOR PROTECTION AGAINST ABDUCTION OF A CHILD
Christine K. Schunter, Box 980, Lumby, British Columbia, Canada, V0E 2G0
Filed Nov. 22, 1996, Ser. No. 755,229
Int. Cl.⁶ A47D *13/08*
U.S. Cl. 2—1 **8 Claims**

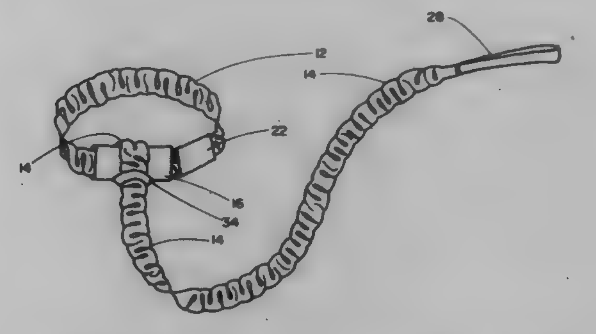

8. A waistbelt and leash for use as a measure of protection against child abductions comprising a wire-reinforced waistband having, at opposite ends, waistbelt fastening and size adjusting clips, a permanently secured padded fabric cover adapted to conceal said waistbelt fastening and size adjusting clips, and a permanently secured wire-reinforced hand-held leash tightenable around said padded fabric cover.

5,699,556
CATCHER'S FACE MASK WITH A SUN-SHADE
Shen-fa Chen, Taipei Hsien, Taiwan, assignor to Hun-yuan Chen, Taiwan
Filed Sep. 24, 1996, Ser. No. 718,896
Int. Cl.⁶ A61F *9/04*
U.S. Cl. 2—9 **7 Claims**

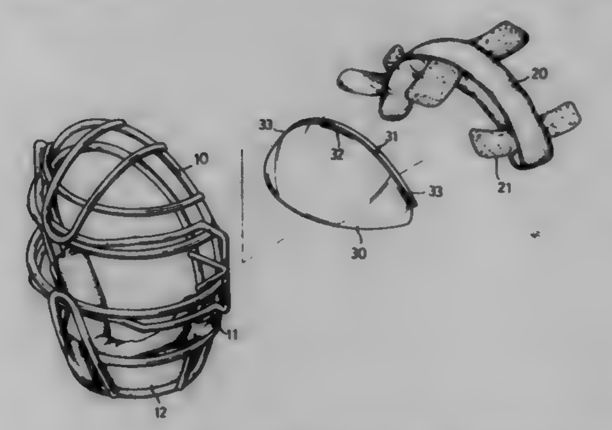

1. In a catcher's face mask comprising a cage constructed to allow a catcher to see therethrough and protect the catcher's face from a flying ball, a lower padding attached to a lower inside portion of the cage, an upper padding attached to an upper inner portion of the cage, a sun-shade comprising a glare reducing strip having a plurality of openings defined therein and means for securing the sun-shade to the cage, the improvement comprising:

said openings are defined in one side edge of the sun-shade and a curved bar portion is affixed to said side edge of the sun-shade adjacent to said openings for forming a portion of the periphery of said openings.

5,699,557
EMBROIDERED APPLIQUE FASTENING SYSTEM CLOTHING ARTICLES
Marie M. Johnson, 5026 Inglewood Ct., Nashville, Tenn. 37216
Filed Jun. 26, 1995, Ser. No. 494,676
Int. Cl.⁶ A41B *11/00;* **A41D** *27/08*
U.S. Cl. 2—239 **15 Claims**

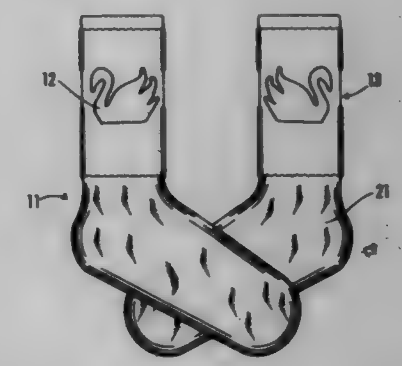

1. A system for fastening a pair of clothing articles made of material comprising:

a. a first fastener patch having a front surface, a back surface and an edge positioned between and in communication with the front surface and the back surface of said first fastener patch;
b. said front surface of said first patch having hooks permanently affixed thereto;
c. embroidery stitching passing through the front and the back surface of said first fastener patch and through the material of a first clothing article to fasten the first fastener patch to the material;
   wherein said embroidery stitching is contained solely within the from surface and the back surface of said first fastener patch and away from the edge to provide a secure attachment of said first fastener patch to the first clothing article;
d. a second fastener patch having a front surface and a rear surface and an edge positioned between and in communication with the front surface and the rear surface of said second fastener patch;
e. said front surface of said second fastener patch having loops permanently attached thereon, said loops being complementary and releasably attachable to said hooks of said first fastener patch; and
f. embroidery stitching passed through the front surface and the rear surface of said second fastener patch and through the material of a second clothing article to fasten the patch to the material;
   wherein said embroidery stitching is contained solely within the front surface and the rear surface of said second fastener patch and away from the edge to provide a secure attachment of said second fastener patch to the second clothing article;
g. wherein the embroidery of each of said first fastener patch and the embroidery of said second fastener patch lies below a height associated with the hooks and the loops, respectively, to enable the embroidery of said first fastener patch and the embroidery of said second fastener patch to form a matched set of embroidery stitching with respect to the first and second articles of clothing allowing the matched set of embroidery stitching to have a collective thickness less than or equal to the thickness associated with the hook and loop portions of the first fastener patch and second fastener patch when they are pressed together in cooperating engaging contact.

5,699,558
GARMENT FOR AUDIO STIMULATION OF FETUS
David Min, 800 MacArthur Blvd., Suite 15, Munster, Ind. 46321
Filed Oct. 9, 1996, Ser. No. 728,083
Int. Cl.[6] H04R *1/02;* A41D *1/20;13/04*
U.S. Cl. 2—48 6 Claims

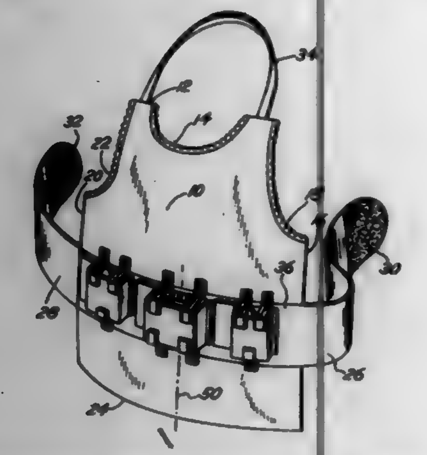

1. A garment for providing audio stimulation to a fetus comprising in combination:
a fabric apron having a top edge, side edges and a bottom edge;
a tie strap on each side edge for fitting about the body of the mother and connectable to maintain the apron positioned against the abdomen and opposed to the womb of the mother;
at lease one speaker pocket on the front of the apron juxtaposed over the fetal cavity, said pocket including means for retaining an audio speaker positioned over the fetal cavity in the pocket; and
an audio source for the speaker, said audio source also retained on the front of the apron.

5,699,559
BODYSUIT HAVING FREELY MOVEABLE STRAPS
Michiko Sano, 209, Futai-cho, Marugame-shi, Kagawa-ken, Japan
Filed Aug. 14, 1995, Ser. No. 514,556
Int. Cl.[6] A41D *7/00;* A41B *9/00*
U.S. Cl. 2—67 16 Claims

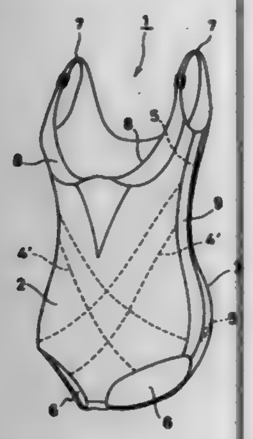

1. A shapesuit comprising:
a body formed by sewing together a front body and a back body; and
at least a pair of stretchable straps extended diagonally and substantially in an X-shape along the front body so that the middle portions thereof intersect each other, and the ends of the stretchable straps are sewn to the body, wherein the middle portions of the stretchable straps move freely with respect to each other, and wherein unstretchable side straps are extended longitudinally along the seams between the front body and the back body, and the opposite ends of the stretchable straps are sewn to the unstretchable side straps.

5,699,560
BACKPACK WITH INTEGRAL GARMENT
Peter Greenberg, 825 Cemetary La., Aspen, Colo. 81611
Filed Aug. 7, 1996, Ser. No. 694,634
Int. Cl.[6] A41D *1/02;3/02;15/04;* A45F *4/00*
U.S. Cl. 2—94 26 Claims

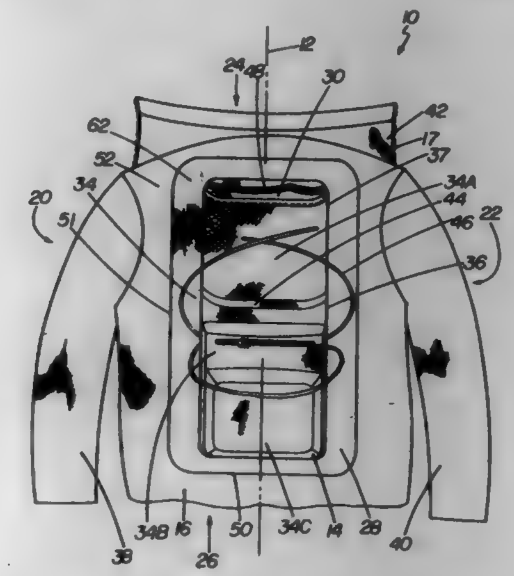

1. An intregral backpack/upper body garment, comprising:
an upper body garment with a back panel having front and rear faces;
a rear backpack assembly comprising:
a rear panel configured to be attached to said rear face and generally conformed to the rear dimensions of a backpack;
at least one storage compartment attached to said rear panel;
a first garment compartment wall generally circumferential about said rear panel and attached to said rear panel, said first garment compartment wall having an outer periphery with first closure means;
a front backpack assembly comprising;
a front panel configured to be attached to said front face and generally conformed to said rear panel;
a pair of shoulder straps having upper ends and lower ends attached to said front panel;
a second garment compartment wall generally circumferential about said front panel and attached to said front panel, said second garment compartment wall having an outer periphery with second closure means, said first and second, closure means joinable to form a closed garment compartment.

5,699,561
SELF-CONTAINED BICYCLE HELMET AND MOLDING PROCESS THEREFOR
Lester Broersma, Jamul, Calif., assignor to Troxel West, San Diego, Calif.
Filed Jun. 28, 1996, Ser. No. 673,256
Int. Cl.[6] A42B *3/00*
U.S. Cl. 2—412 12 Claims

1. A method for constructing a bicycle helmet having impact attenuating components, comprising the steps of:
molding a shell having integral inner and outer walls defining a cavity;

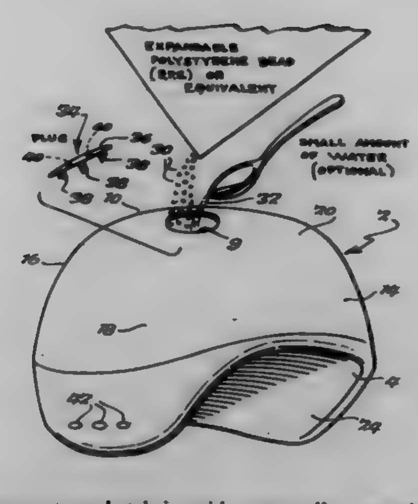

forming an access hatch in said outer wall, to provide entry to said cavity;
filling said cavity with an impact attenuating material inserted through said access hatch, said access hatch being of sufficient size to facilitate scooping of said impact attenuating material into said cavity;
treating said helmet as necessary to cause said impact attenuating material to remain in said cavity; and
closing said access hatch with a plug.

5,699,562
DETERGENT CONTROLLING MEANS FOR USE IN A TOILET
Nien-feng Lu, No. 38, Chinghua St., Taipei, Taiwan
Filed Dec. 3, 1996, Ser. No. 759,938
Int. Cl.[6] E03D *9/02*
U.S. Cl. 4—223 3 Claims

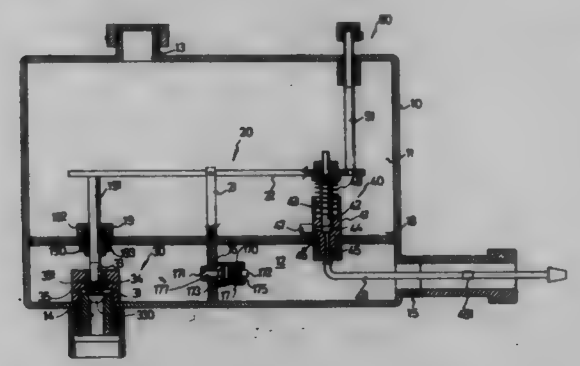

1. A detergent controlling means for use in a toilet comprising:
a container having a water hose securely connected thereto and a first entrance and an exit respectively mounted on an outer periphery thereof;
a partition securely dividing said container into an upper portion and a lower portion and having a leverage securely mounted thereon, said leverage being provided with a fulcrum mounted onto the partition, a bridge centrally and pivotally connected with the fulcrum,
a board sealingly and securely dividing said lower portion of said container into a first part and a second part,
an inlet valve securely mounted in said first part and onto an outer periphery of said container and having
a first rod slidably and sealingly received through said partition, and abutted to a first end of said bridge by a first end thereof,
a fourth rod having a first end abutted to a second end of said first rod, and a second end securely mounted with a cone-shaped plug which is detachably connected with said water hose,
a seat having a chamber defined therein and communicating with said water hose and a plurality of through holes defined near an outer periphery thereof and communicating with said chamber, and
a first coil spring movably received within said chamber and confined between a first end of said chamber and a first end of said cone-shaped plug,
a releasing valve securely mounted onto said partition and having
a second rod securely and sealingly connected with a second end of said bridge,
a barrel securely mounted onto said partition and having a first space and a second space defined therein; said second space is configured to have a third entrance communicating with said upper portion, a second exit and an extension tube communicating therewith, and
a second coil spring mounted around said second rod and securely confined between said first space and an under face of said bridge, and
a one-way valve securely mounted through said board and having a channel and a passage defined therein; said passage communicating with said channel,
a fourth entrance defined at a first end of said passage and communicating with said first part of said lower portion,
a stop securely mounted at a second end of said channel,
a third rod reciprocally received within said channel,
a plug securely mounted onto a first end of said third rod and having a plurality of holes defined near an outer periphery thereof, and
a third coil spring securely confined between a face of said plug and said stop.

5,699,563
FLOAT-CONTROLLED DUAL FLUSH VALVE
Richard C. McClure, Claremont, Calif., assignor to Fluidmaster, Inc., Anaheim, Calif.
Continuation of Ser. No. 409,339, Mar. 23, 1995, abandoned.
This application Jul. 3, 1996, Ser. No. 674,924
Int. Cl.[6] E03D *1/14*
U.S. Cl. 4—325 2 Claims

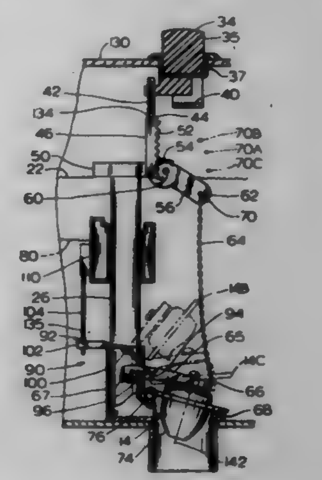

1. A dual flush valve apparatus for a toilet that includes a tank for holding water, an overflow tube which extends vertically, a valve seat coupled to a toilet bowl, a pivotable flush member which has an outer portion, and a device which is connected to said flush member outer portion and which can pivot said flush member off said seat to release water to flow to said toilet bowl, said flush member being pivotable downwardly against said seat to stop said water flow, said flush member including a float part that keeps said flush member in an upwardly pivoted portion when said flush member is pivoted at least a predetermined amount off said seat, comprising:

a manually operable control which is operable in a full flush mode to pivot said flush member by more than said predetermined amount for a full flush, and which is operable in a partial flush mode to pivot said flush member by less than said predetermined amount so said flush member tends to immediately pivot down against said seat for a partial flush;
a float that is constructed to slide vertically along said overflow tube and to move down when water in said tank falls below a predetermined partial flush water level; and
a release mechanism which is constructed to be coupled to said flush member to keep it pivoted up by less than said predetermined amount and which is coupled to said float so said release mechanism can release said flush member when the float begins to move down.

5,699,564
DETACHABLE ORGANIZING APPARATUS FOR CHILDREN FURNITURE
Deborah A. Heh, 25 Brook St., Ocean, N.J. 07712
Filed Jan. 19, 1996, Ser. No. 589,459
Int. Cl.[6] A47D *15/00;* B65D *21/036;33/28;30/26*
U.S. Cl. 5—503.1 5 Claims

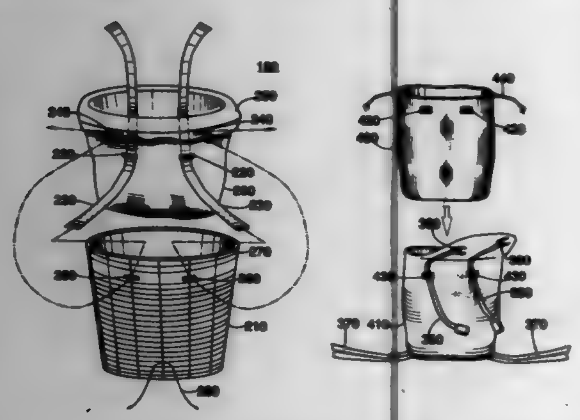

1. A detachable organizing apparatus for children furniture, said apparatus comprising:
exterior holding means having a first aperture;
interior detachable holding means, disposed within said exterior holding means, for receiving a plurality of children accessories; and
securing means, coupled to said interior holding means, for securing said exterior holding means to the children furniture,
wherein said interior detachable holding means comprises a bag having a second aperture and a cover flap extending from a edge of said bag for covering a rim of said exterior holding means; and
wherein said securing means comprises a first strap having two ends, coupled to an interior surface of said bag, where said first strap is for attachment to said children furniture, where said first strap is received through said first aperture and said second aperture for securing said exterior holding means to the children furniture by tying said two ends of said first strap.

5,699,565
COLLAPSIBLE BEDSPREAD HOLDER
Emil M. Petterborg, 7774 Beltane Dr., San Jose, Calif. 95135
Filed Oct. 1, 1996, Ser. No. 723,586
Int. Cl.[6] A47C *21/02*
U.S. Cl. 5—504.1 9 Claims

1. A collapsible bedspread holder for use in association with a bed supported on a floor and including a bedspread, a mattress having top and bottom surfaces, and a box spring having a top surface normally contiguous to the bottom surface of said mattress, said holder being selectively deployable for supporting the bed-

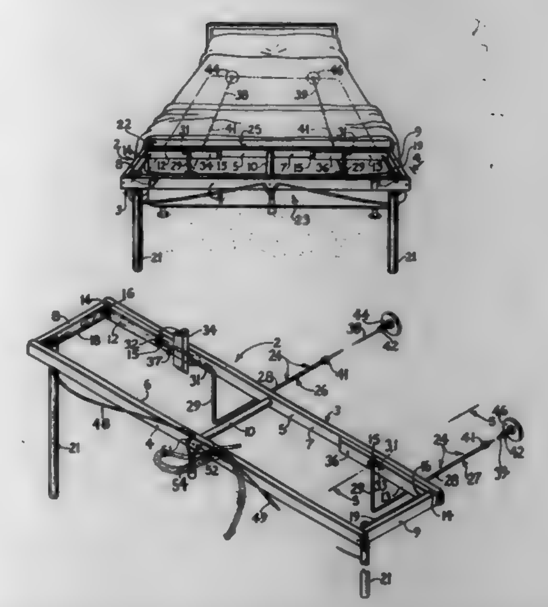

spread when not in use to cover the bed, end said bedspread holder being adapted to be operatively positioned at one end of the bed and selectively collapsible thereat to be covered by said bedspread when said bedspread is applied to cover the bed, said bedspread holder comprising:
a) a quadrilateral frame selectively deployable between a horizontal bedspread support position and a collapsed vertical position;
b) means for pivotally anchoring said quadrilateral frame in close juxtaposition to the said one end of the bed at an elevation approximately corresponding to the height of the top surface of the mattress: and
c) means including a pair of independent legs independently pivotally mounted on said frame and deployable to extend perpendicularly between said frame and the floor when said frame is in said horizontal bedspread support position and selectively pivotally deployable inwardly toward each other to lie horizontally substantially parallel to the floor in juxtaposition to said frame and spaced from said floor when said frame is in collapsed vertical position.

5,699,566
SICKBED
Ching-Shan Chuang, Hou-Bei Shaing, Tainan, Taiwan
Filed Jun. 7, 1996, Ser. No. 660,269
Int. Cl.[6] A61G *7/008;7/015*
U.S. Cl. 5—613 8 Claims

1. A sickbed comprising:
a base frame,
a first bed frame mounted on said base frame, said first bed frame includes a plurality of fixed bed planks, said fixed bed planks are deployed in positions perpendicular to a longitudinal axis of said first bed frame,
a second bed frame that is movable up and down, said second bed frame is mounted below said first bed frame, said second bed frame includes a plurality of movable bed planks, said movable bed planks are deployed in positions perpendicular to a longitudinal axis of said second bed frame, said movable bed planks are interspersed between said fixed bed planks,
a first driving device to control up and down movement of said second bed frame,
two lateral turning frames adapted to help turn a body of a patient, each said lateral turning frame comprises a shaft mounted parallel to a longitudinal axis of said base frame and a plurality of support planks, said support planks are deployed in positions perpendicular to a longitudinal axis of said lateral turning flame, said support planks being interspersed between said fixed bed planks, and

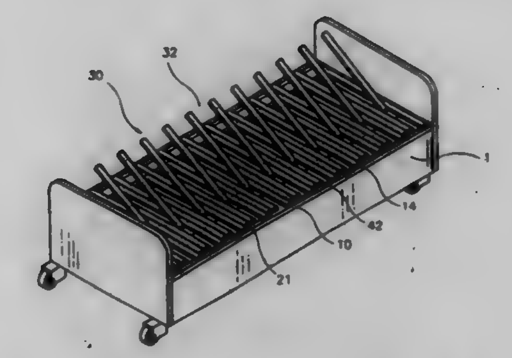

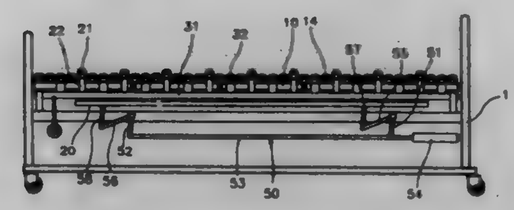

a second driving device to control raising of outer ends of said support planks of said lateral turning frames so as to create a plane inclined from a center of said sickbed to urge said body of said patient to roll toward said center of said sickbed; wherein
said movable bed planks raise above or drop below a plane of said fixed bed planks to form alternate planes of support for said patient's body, thereby changing the areas of said patient's body subjected to pressure, and
said outer ends of said support planks raise to urge said patient's body toward said center of said sickbed.

5,699,567
SUPPORT APPARATUS
Mark Andrew Sanders, Windsor, and Alexander Joseph Kalogroulis, Coulsdon, both of United Kingdom, assignors to Keymed (Medical & Industrial Equipment) Ltd., Essex, United Kingdom
PCT No. PCT/GB95/02814, § 371 Date Jul. 8, 1996, § 102(e) Date Jul. 8, 1996, PCT Pub. No. WO96/16628, PCT Pub. Date Jun. 6, 1996
PCT Filed Dec. 1, 1995, Ser. No. 669,455
Claims priority, application United Kingdom, Dec. 1, 1994, 9424299
Int. Cl.[6] A61G *7/00;5/00*
U.S. Cl. 5—614 12 Claims

1. Support apparatus for supporting a patient at an adjustable position comprising a support member connected adjustably to a supporting structure, a handle connected to the support member such that in use an operator gripping the handle may apply an adjusting force to the support member, a locking mechanism for retaining the support member at a required position and a release mechanism operable to release the locking mechanism to allow adjustment, wherein the release mechanism comprises a cable connected to the locking mechanism such that the locking mechanism is releasable in response to the cable being pulled and wherein a portion of the cable forms an actuating portion normally extending in proximity to a cooperating portion of the handle such that in use the actuating portion may be clasped to the handle by an

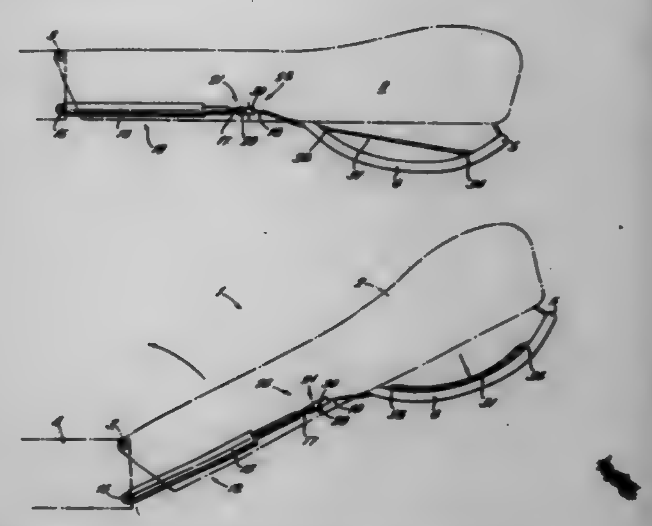

operator gripping the actuating portion and the co-operation portion of the handle to thereby pull the cable and actuate the release mechanism.

5,699,568
STRETCHER FOR IMMOBILIZING A PATIENT OR CASUALTY
Paul R. Couldridge, 21 Woodbridge Rd., Hamilton, Ontario, Canada, L8K 3C6
Continuation of Ser. No. 648,630, May 13, 1996, abandoned.
This application Apr. 15, 1997, Ser. No. 839,733
Int. Cl.[6] A61G *1/00*
U.S. Cl. 5—628 3 Claims

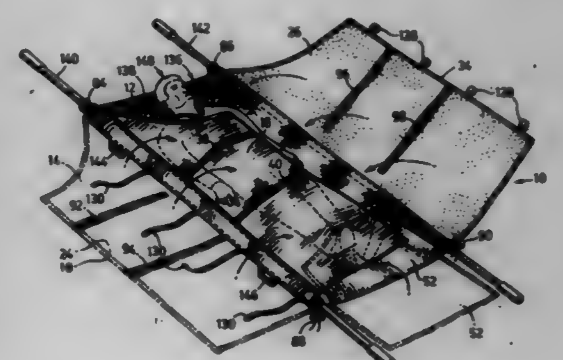

1. A stretcher assembly for immobilizing a patient or casualty comprising:
a wrap-around flexible sheet member having a longitudinally extending medial portion positionable under a patient or casualty and side panel portions extending laterally outwardly from opposite sides of the medial portion,
one side panel portion being foldable across the top of a patient or casualty and the other side panel portion being foldable across the top of the patient or casualty and the top of said one side panel portion,
each side panel portion having at least one slit which is substantially vertically aligned with a corresponding slit in the other side panel portion, when the side panel portions are folded across the top of a patient or casualty, to provide access to the patient or casualty through the aligned slits, and
longitudinally spaced adjustable fastening devices to secure said other side panel portion in place across the top of the patient and said one other side panel portions,
the sheet member having a forward pair of laterally spaced apertures and a rear pair of laterally spaced apertures, and

a conventional collapsible stretcher having a pair of carrying poles and a length of canvas extending therebetween, each carrying pole having a front foot and a rear foot extending downwardly through apertures in the canvas or similar material,

the front feet of the carrying poles also passing downwardly through said forward pair of laterally spaced apertures in the sheet member, and the rear feet of the carrying poles also passing downwardly through said rear pair of laterally spaced apertures in the sheet member.

5,699,569

COMBINED BED AND SEAT DEVICE FOR AN INFANT

Sabine Schwarz-Zöhrer, Pfarrgasse 61/14/1, 1232 Wien, Austria

PCT No. PCT/AT94/00159, § 371 Date Jun. 14, 1996, § 102(e) Date Jun. 14, 1996, PCT Pub. No. WO95/11607, PCT Pub. Date May 4, 1995

PCT Filed Oct. 27, 1994, Ser. No. 635,942

Claims priority, application Austria, Oct. 27, 1993, 2158/93

Int. Cl.[6] A47D *11/00*; A47C *27/10*

U.S. Cl. 5—655 7 Claims

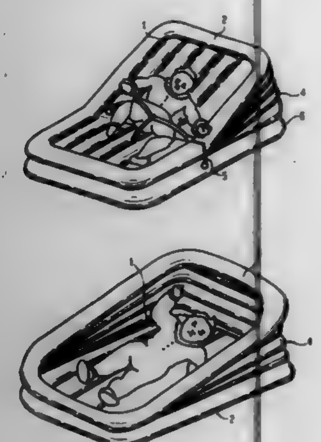

1. A bed for an infant, comprising:
a base (1) for supporting an infant;
a first inflatable cushion (2) secured to and surrounding the base (1);
a second inflatable cushion (6) having a forward section which is secured to a forward section of the first inflatable cushion (2), said second cushion defining a circumference which substantially equals a circumference of the first cushion;
an inflatable bellows-type wall member (4) of wedge-shaped configuration disposed between the first and second cushions and secured to a rearward section of the first and second cushions; and
a fastening means (5) for so detachably connecting the first cushion to the second cushion as to permit an adjustment of the support between a first operative position in which the base (1) is angled relative to the second cushion (6) and a second operative position in which the base (1) is in a horizontal disposition.

5,699,570

PRESSURE RELIEF VALVE VENT LINE MATTRESS SYSTEM AND METHOD

John W. Wilkinson, Bennington, Vt., and Richard W. Raburn, Simpsonville, S.C., assignors to Span-America Medical Systems, Inc., Greenville, S.C.

Filed Jun. 14, 1996, Ser. No. 665,056

Int. Cl.[6] A61G *7/04*; A47C *27/10*

U.S. Cl. 5—713 26 Claims

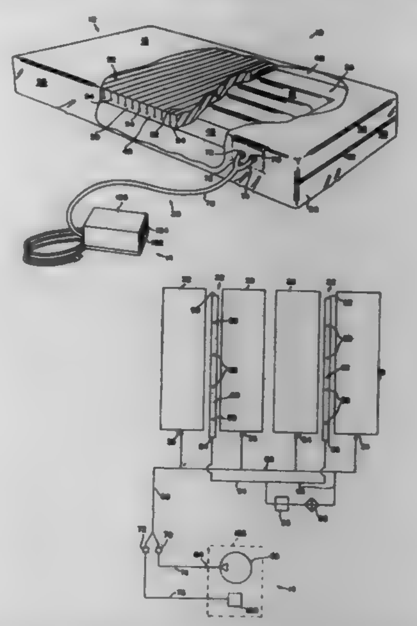

1. A pressure relief valve vent line mattress system, comprising:
a mattress body including at least one patient air support bladder having a bladder air input port;
air supply pump means, with a pump air supply output port, for outputting a predetermined positive flow of air at said pump air supply output port thereof;
a first air tube interconnecting said pump air supply output port with said bladder air input port so that said predetermined positive flow of air is supplied to said patient air support bladder;
at least one air distribution manifold received within said mattress body and having a manifold air input port for receiving and dispersing air supplied thereto;
a second air tube interconnecting with said first air tube in parallel therewith and interconnecting with said manifold air input port; and
a first pressure relief valve operatively received in said second air tube, having a set point established such that overflow pressure from said patient air support bladder is dispersed within said mattress body as low air loss via said manifold for patient cooling and drying effects while the pressure level within said patient air support bladder is automatically controlled by venting via said manifold such bladder overflow pressure.

5,699,571

INFANT BEDDING APPARATUS

Donald H. Yowell, 2508 Easton Ave., Bethlehem, Pa. 18017

Filed Apr. 16, 1996, Ser. No. 633,227

Int. Cl.[6] A47C *21/04*; A47D *7/00*

U.S. Cl. 5—724 11 Claims

1. An infant bedding apparatus comprising:
a mesh sleeping surface;
a suspension device supported by an existing sleeping surface and suspending the mesh sleeping surface within an existing framework of an infant bed, whereby an air space is defined between the existing sleeping surface and the mesh sleeping surface;

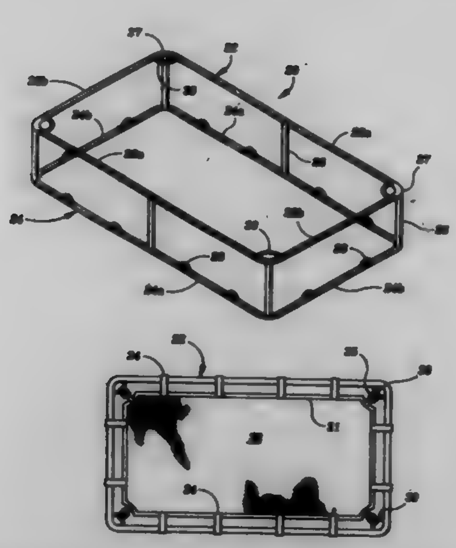

the suspension device being a rigid rectangular frame including upper and lower interconnected portions; and
the mesh sleeping surface being connected to the rigid frame by connectors.

5,699,572

COMBINATION CABLE SPREADER AND CABLE DRIVER

Brian R. Castle; James J. Scott, both of Rolla, Mo., and John G. Oldsen, Butler, Pa., assignors to Jennmar Corporation, Pittsburgh, Pa.

Continuation-in-part of Ser. No. 360,261, Dec. 20, 1994. This application May 14, 1996, Ser. No. 645,840

Int. Cl.[6] B25F *1/00*

U.S. Cl. 7—138 12 Claims

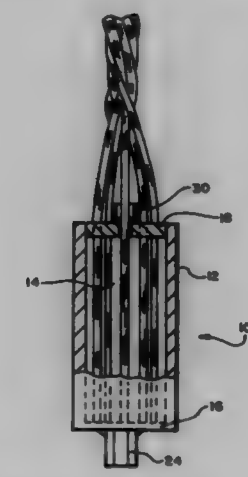

1. A cable driving wrench assembly for rotating a multi-strand cable rock anchor, said wrench assembly comprising:
a hollow, tubular wrench body having a first closed end, a second end spaced from said first closed end and an open interior;
a plurality of apertures in said second end of said wrench body extending into said open interior, each said aperture adapted to receive an individual strand of the multi-strand cable of the cable bolt when the individual strand is separated from the remaining strands of the cable at least at one end of the cable, and wherein said open interior of said wrench body is adapted to receive one end of the cable through said plurality of apertures; and
a means for thrusting and rotating said wrench body attached to said wrench body.

5,699,573

METHOD AND PULP WASHING MACHINE FOR WASHING OF PULP OR ANY CORRESPONDING MATERIAL

Timo Tapio Saslasti, Espoo, Finland, assignor to Finbark Oy, Espoo, Finland

PCT No. PCT/FI93/00452, § 371 Date Jun. 30, 1995, § 102(e) Date Jun. 30, 1995, PCT Pub. No. WO94/10373, PCT Pub. Date May 11, 1994

PCT Filed Nov. 5, 1993, Ser. No. 433,326

Claims priority, application Finland, Nov. 5, 1992, 924993

Int. Cl.[6] D06B *5/02*

U.S. Cl. 8—156 17 Claims

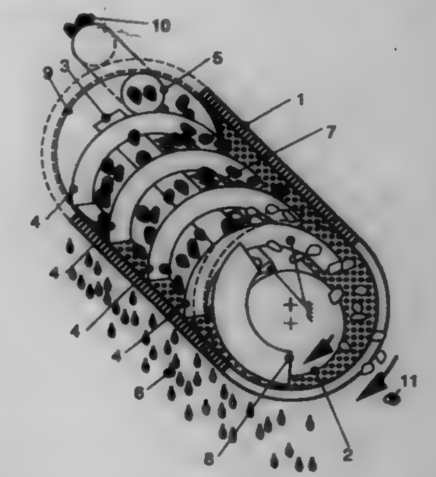

1. A method for washing pulp or any corresponding material, comprising the steps of:
transporting the material to be washed between a rotating drum (1) and a rotating pressing roll (2) inside the drum, in a direction along a longitudinal axis of the drum from one end thereof, at least one of the drum and the pressing roll being perforated,
pressing the material to be washed a plurality of times between the drum and the pressing roll during the transporting step, and
wetting the material to be washed with washing liquid at least at one position during the transporting step.

5,699,574

EXTENDIBLE APPLICATOR

Jeffrey J. Oviatt, 5120 E. Orchard Ave., Nampa, Id. 83687

Filed May 6, 1996, Ser. No. 643,506

Int. Cl.[6] A47K *7/02*

U.S. Cl. 15—210.1 9 Claims

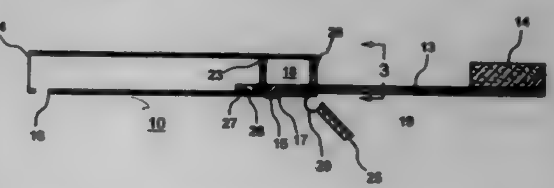

1. An extendible applicator device comprising:
a lower tubular handle section, having an upper end and a lower end, the lower tubular handle section having a longitudinal axis;
an upper handle section having first and second ends, the upper handle section being slideably engageable within the lower tubular handle section;
securing means between the lower tubular handle section and the upper handle section configured to selectively prevent the upper handle section from sliding in relation to the lower tubular handle section, the securing means including the

upper handle section configured having a locking spring tab located thereon, the locking spring tab having a predetermined outer perimeter shape and size, and the lower tubular handle section configured having a locking spring tab receiver therein, the locking spring tab receiver configured having a predetermined inner perimeter shape and size which corresponds to and is slightly larger than the predetermined outer perimeter shape and size of the locking spring tab; and

an applicator pad attached at the second end of upper handle section.

5,699,575
FLEXIBLE ROTARY TOOTHBRUSH
Melvin W. Peifer, R.R. 2, Box 349-H, Millville, Pa. 17846
Filed Oct. 23, 1995, Ser. No. 546,679
Int. Cl.⁶ A61C *17/26;* **A61L** *2/10*
U.S. Cl. 15—23 **9 Claims**

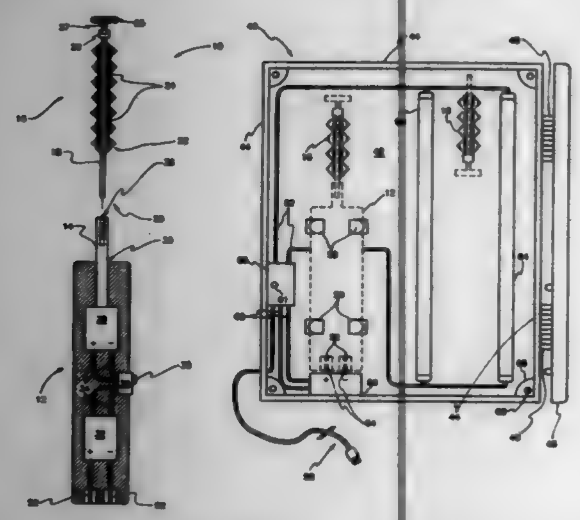

1. A rotary brush comprising:
a handle having a drive shaft and a motor for rotating said drive shaft carried within said handle;
a flexible shaft having a proximal end and a distal end, said flexible shaft having means for detachable securement to said drive shaft at said proximal end for rotation with said drive shaft;
a brush fixed on said flexible shaft near said distal end for rotation with said flexible shaft;
a bearing wheel journalled to said distal end of said flexible shaft, said bearing wheel attached solely to said flexible shaft, wherein, when said rotary brush is in use, said bearing wheel is placed in contact with the teeth and gums of a user forming a stationary rotational support for said distal end of said flexible shaft as said flexible shaft and said brush are rotated by said drive shaft and said motor.

5,699,576
EXTERIOR WINDOW CLEANING APPARATUS
Frank Sohalby, Austintown, Ohio, assignor to Robert S. Tomko, Canfield, Ohio, a part interest
Filed Apr. 7, 1995, Ser. No. 418,668
Int. Cl.⁶ A47L *1/04*
U.S. Cl. 15—103 **7 Claims**

1. A window cleaning apparatus for use on large buildings to clean windows thereof, said apparatus comprising; a plurality of identical interconnected hollow housing members together forming a chamber, a retractable window washing engagement means mounted within said chamber and to said housing members for retraction away from said windows into said chamber, a squeegee means extending from said window washing engagement means,

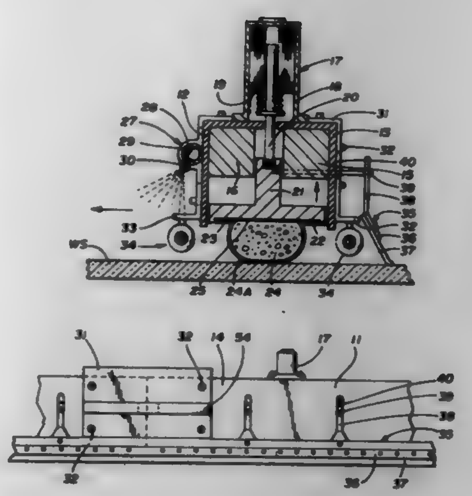

said squeegee means retractable with said window washing engagement means away from said windows, a guide track adapted to be mounted on said building, cable support and deployment means adapted to be mounted on said buildings cables extending between and coupled to said deployment means and cable engagement brackets mounted on said housing members, a water spray means mounted on said housing members, means for interconnecting said housing elements to one another, wheel assemblies on some of said housing elements, one of said wheel assemblies registered in said guide track, said support and deploying means adapted to advance said window cleaning apparatus on said track.

5,699,577
MAGNETIC CLEANING PIG
William Jack Rankin, Sapulpa, Okla., assignor to TDW Delaware, Inc., Wilmington, Del.
Filed Dec. 27, 1996, Ser. No. 773,696
Int. Cl.⁶ B08B *9/04*
U.S. Cl. 15—104.061 **23 Claims**

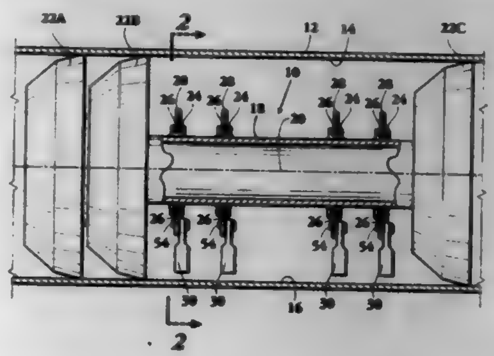

1. A cleaning device for passing through a pipeline to gather and remove ferro-magnetic debris, the pipeline having a cylindrical internal wall with a gravitationally downward internal bottom portion, which device comprises:
an elongated body of cross-sectional dimension less than that of the pipeline cylindrical internal wall;
at least two supports, spaced apart from each other and affixed to said elongated body whereby said elongated body is supported at least substantially co-axially of the pipeline cylindrical wall;
a carrier supported by said body and having a circumferential surface at least a portion of which provides a generally circular peripheral surface at least substantially concentric to and spaced adjacent to the pipeline internal wall;
at least one permanent magnet retained by said carrier adjacent to said carrier circular peripheral surface; and

means to orientationally maintain said carrier circular peripheral surface in the direction of and adjacent the pipeline internal wall gravitationally downward bottom portion whereby at least a portion of any ferro-magnetic debris residing in the pipeline will be picked up by said at least one permanent magnet.

5,699,578
CLEANING DEVICE
Norbert Dumler, and Bernd Fellner, both of Ansbach, Germany, assignors to georg karl geka-brush GmbH, Bechhofen-Waizendorf, Germany
PCT No. PCT/EP94/02713, § 371 Date Feb. 28, 1996, § 102(e) Date Feb. 28, 1996, PCT Pub. No. WO95/06444, PCT Pub. Date Mar. 9, 1995
PCT Filed Aug. 13, 1994, Ser. No. 605,017
Claims priority, application Germany, Aug. 31, 1993, 9313034 U
Int. Cl.⁶ A61C *15/00;* **A46B** *3/18*
U.S. Cl. 15—167.1 **5 Claims**

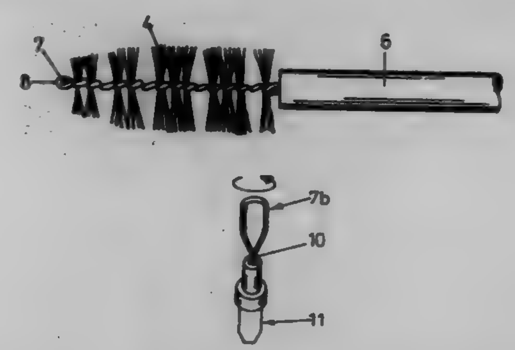

1. A cleaning device for use in an interdental area, said cleaning device having a holding member and radially extending fibers inserted in between two twisted wire-type sections (1, 2) to form a brush, a first end of said two twisted wire-type sections being engaged in said holding member, said cleaning device comprising at least one open loop or eye formed at a free second end of the two twisted wire-type sections, said two twisted wire-type sections consisting of at least one plastic fiber and being formed from a bow bent in the shape of a U, the open loop or eye being formed in a vicinity of a bight of the U, said radially extending fibers containing an abrasive additive selected from the group consisting of silicon carbides and aluminum oxide.

5,699,579
DEVICE FOR WASHING VEHICLES
Joerg Burger, Kirchenstrasse 5 a, D-85253 Eisenhofen, Germany
Filed Jun. 7, 1996, Ser. No. 659,831
Claims priority, application Germany, Jun. 8, 1995, 295 09 406 U
Int. Cl.⁶ B60S *3/06*
U.S. Cl. 15—230.14 **17 Claims**

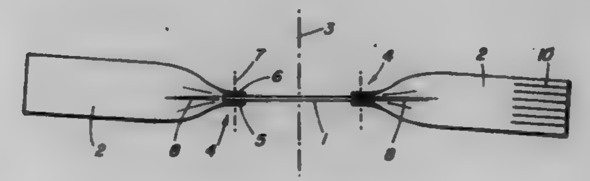

1. A device for washing vehicles comprising in combination:
a rotatable shaft;
a plurality of supporting disks arranged adjacent to but separated from one another on the rotatable shaft;
a plurality of radially protruding flat textile material strips;
wherein:
each of the flat strips has an inwardly folded portion forming two flat strip parts and a fold in the longitudinal direction of the strip, and
the flat strip parts are each attached to the supporting disks,
so that the folds expand outwardly to form outer areas of the strip which extend at right angles to the plane of the supporting disks.

5,699,580
ADJUSTABLE TROWEL AND METHOD OF PRODUCING
Mike Silverstein, P.O. Box 3381, Eilat 88000, Israel
Filed Dec. 14, 1995, Ser. No. 572,445
Int. Cl.⁶ B05C *17/10*
U.S. Cl. 15—235.7 **10 Claims**

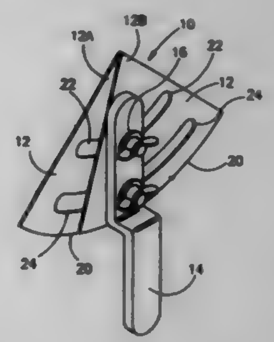

1. An adjustable trowel, comprising:
a. first and second blade members, each of said blade members having first and second sides defining a blade angle therebetween and having a plurality of arcuate slots therethrough;
b. a handle having a gripping portion and a leg portion; and
c. means for connecting and securing the blade members to the leg portion of the handle, wherein the blade members are movable relative to each other in mutually parallel planes, the connecting means permitting selective releasable locking of said blade members whereby a desired angle between said second side of said first blade member and said second side of said second blade member may be selectively adjusted.

5,699,581
HEATED WIPER ASSEMBLY WITH BRUSH ATTACHMENT
Ken Heneghan, and Karen Heneghan, both of 18 W. Belle Plaine, Park Ridge, Ill. 60068
Filed Jun. 11, 1996, Ser. No. 661,696
Int. Cl.⁶ B60S *1/48;1/38;1/28*
U.S. Cl. 15—250.07 **2 Claims**

1. An electrically heated windshield wiper assembly for use with automobiles, said assembly comprising:
an elongated tubular housing chassis extending in a first direction, said chassis defining a top and a bottom, said chassis having a slot defined on said bottom, an external channel member extending along and coupled with a lower edge of said bottom and a plurality of side chassis openings extending therethrough;
an elongated wiper blade received in said slot;
an elongated detachable brush assembly mounted on said external channel member, said brush assembly including a brush and an elongated brush mounting member detachably engaging said channel member, said mounting member having a plurality of spring tab members which engage in respective chassis openings; and

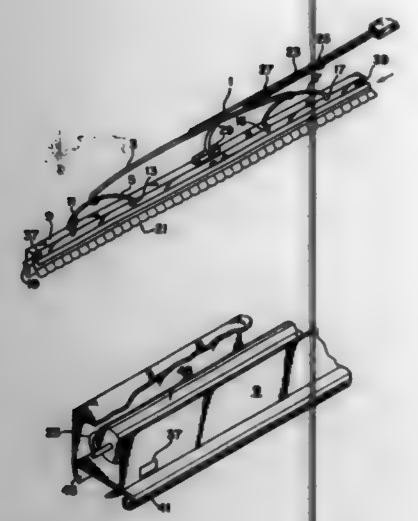

an electrical heating element mounted within and to said chassis, said heating element adapted to be connected to a power supply to supply heat to the chassis.

5,699,582

WINDSCREEN WIPER DEVICE WITH DRIVE HEAD TO SHAFT CONNECTION

Gilles Berge, Clairefontaine/Yvelines; Jean-Pierre Eustache, Antony; Joël Princet, and Gilbert Bouy, both of Chatellerrault, all of France, assignors to Valeo Systemes De'Essuyage, France

Continuation of Ser. No. 395,037, Feb. 27, 1995, abandoned.
This application May 23, 1996, Ser. No. 652,296
Claims priority, application France, Feb. 28, 1994, 94 02239
Int. Cl.[6] **B60S** *1/34*
U.S. Cl. 15—250.34 **5 Claims**

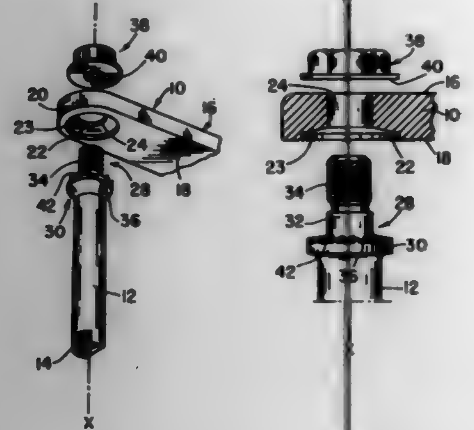

1. A windshield wiper assembly, said assembly comprising:
an elongated, rotatable motor shaft defining a longitudinal axis, said motor shalt includes a cylindrical main portion, a first free end portion and a second flee end portion, the cylindrical main portion has a first outer diameter and the second free end portion includes means for rotational articulation of said motor shaft by a geared motor unit, said first free end portion includes;
an outer radial collar connected with and adjacent to said main portion, said outer radial collar defining a first cylindrical outer edge surface substantially parallel with said axis and having a second outer diameter greater than said first diameter, and a conical face which defines a radial annular bearing surface, said conical face includes a plurality of teeth projecting therefrom and radially spaced about said conical face, said teeth each having a length, said teeth having a generally triangular profile in cross-section that is parallel with said motor shaft;
a cylindrical coupling section connected with and adjacent to said outer radial collar, said coupling section defines a cylindrical, smooth outer surface having a third outer diameter less than said first diameter, wherein said plurality of teeth extend from said outer edge surface to said smooth outer surface;
a threaded cylindrical end section connected with and adjacent to said cylindrical coupling section, said end section having external threads thereon and having a fourth outer diameter less than said first diameter;
a driving head of a windshield wiper arm, said head having first and second substantially parallel faces, said first face has a conical countersinking formed therein which defines a radial stop surface and a second cylindrical outer edge surface substantially parallel with said axis, said second face has a cylindrical bore formed therein which is aligned with and extends into said conical countersinking;
a threaded nut, said nut includes a clamping face;
said free end portion of said shaft is coupled to said driving head, wherein said threaded end section passes through the cylindrical bore to extend from said first face such that the cylindrical coupling section lies within said bore, said threaded nut engages said threaded end section, with said clamping face engaging said first face of said head thus providing axial clamping force such that said teeth are embedded into said conical countersinking and the radial annular bearing surface engages said radial stop surface.

5,699,583

SCREEN WIPER BLADE HAVING A FLEXIBLE DEFLECTOR FASTENED ON THE GRIPPERS WHICH HOLD THE WIPING STRIP OF THE BLADE

Daniel Maubray, Issy les Moulineaux, France, assignor to Valeo Systemes D'Essuyage, La Verrier, France

Filed Sep. 27, 1996, Ser. No. 720,306
Claims priority, application France, Sep. 29, 1995, 95 11502
Int. Cl.[6] **B60S** *1/38*
U.S. Cl. 15—250.201 **8 Claims**

1. A screen wiper for wiping a contoured swept surface of a motor vehicle, the screen wiper comprising an elongated, articulated structure, said structure defining a longitudinal direction, the structure being deformable by relative movement of at least two components in a direction perpendicular relative to the elongation thereof, a swingle bar having at least two terminal ends and being part of said structure, a set of grippers coupled to a respective one of each of the swingle bar terminal ends; an elongated wiping strip of flexible material received within and engaged by said grippers and defining, with said structure, a plane, the structure urging the swingle bar and thus the wiping strip against the swept surface to enable the wiping strip to selectively deform in a direction perpendicular to the longitudinal direction; a flexible aerodynamic deflector; and fastening means mounting the deflector on the swingle bar, wherein said deflector is laterally spaced from said plane, and wherein the deflector includes at least one fastening lug with a slot therein elastically and directly engaging a corresponding one of the grippers to establish the fastening means.

5,699,584

WEB SYSTEM

Francis J. Wieloch, Penfield; Gina M. LaManna, Ontario; Frank J. Jackson, Jr., Rochester; Gary W. Smallman, Fairport; Kenneth A. Kemp, Walworth; Edward J. Speakman, Ontario; Edward F. Grabowski, Webster; Terry L. Street, Fairport; Carl A. Wisniewski, Rochester, and John A. Czerniawski, Webster, all of N.Y., assignors to Xerox Corporation, Stamford, Conn.

Filed Jul. 24, 1995, Ser. No. 505,927
Int. Cl.[6] **B08B** *1/02;1/04;* **G03G** *21/00*
U.S. Cl. 15—256.52 **13 Claims**

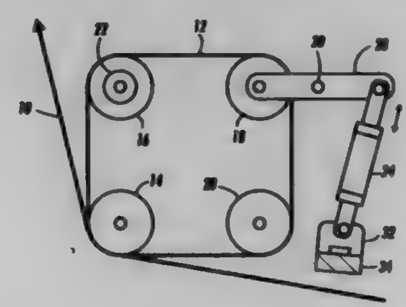

1. A cleaning system including:
a frame,
a movable member having an outer surface to be cleaned, and
a movable contact cleaner web supported by said frame and disposed for synchronous moving contact with said surface of said member while said surface is moving, said contact cleaner web comprising a polymer having a tacky outer surface which contacts said surface of said member.

5,699,585

ELECTRIC VACUUM CLEANER

Yutaka Tomooka, Takatsuki, and Yasuhiro Oka, Osaka, both of Japan, assignors to Sharp Kabushiki Kaisha, Osaka, Japan

Filed Oct. 16, 1995, Ser. No. 543,650
Claims priority, application Japan, Oct. 31, 1994, HEI 6-266858; Feb. 22, 1995, HEI 7-033814
Int. Cl.[6] **A47L** *5/36*
U.S. Cl. 15—327.2 **9 Claims**

1. An electric vacuum cleaner comprising:
an appliance body, including a motor casing portion having an electric fan therein and a dust collecting casing portion;
engaging means, disposed in said dust collecting casing portion, for detachably engaging a dust collecting bag; and
releasing means, external to said appliance body and integrally connected to said engaging means, for permitting a releasing operation external to the appliance body to disengage the dust collecting bag from said engaging means, wherein the dust collecting bag is thereafter removable from an area of the dust collecting portion which is not proximate to the engaging means.

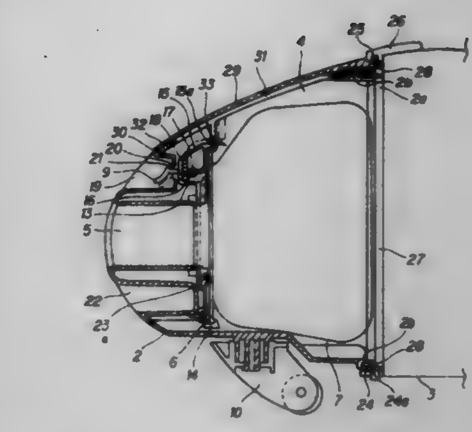

5,699,586

VACUUM CLEANER WITH IMPROVED SUCTION INLET

M. Anthony Melito, East Haven, Conn., and Robert P. Rebres, Castro Valley, Calif., assignors to Black & Decker Inc., Newark, Del.

Filed Jan. 11, 1996, Ser. No. 584,846
Int. Cl.[6] **A47L** *5/10;* **A61K** *5/26*
U.S. Cl. 15—383 **9 Claims**

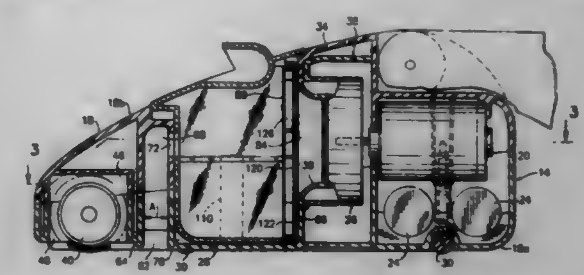

3. In a vacuum cleaner head having a housing with a suction inlet at its bottom and a rotatable brush connected to the housing, the improvement comprising:
the housing having a pocket in front of the suction inlet in which the rotatable brush is located, the pocket being separate from the suction inlet with a wall of the housing being located between the pocket and the suction inlet;
at least two motors, the first one of the motors being connected to an impeller and a second one of the motors being connected to the rotatable brush;
said suction inlet extending upward from the bottom of the housing substantially entirely perpendicular to the bottom of the housing between an entrance to the suction inlet and an exit aperture in a wall at the top of the suction inlet;
the suction inlet having an upper section with a generally uniform shape and a lower section with a non-uniform shape; and
the lower section having straight front and rear wall sections in which two of the rear wall sections uniformly taper towards the front wall section as they approach lateral ends of the suction inlet, and two straight top wall sections uniformly taper downwardly from the upper section as they extend towards the lateral ends of the suction inlet.

5,699,587
HANDLE FOR A SANITARY FITTING
Alfons Thul, Wittlich, Germany, assignor to American Standard, Inc., Piscataway, N.J.
Filed Jan. 16, 1996, Ser. No. 585,667
Int. Cl.⁶ A47B *95/02;* **E05B** *1/00*
U.S. Cl. 16—114 R **6 Claims**

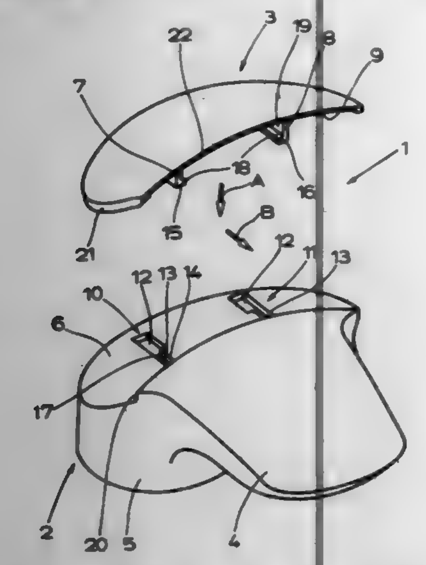

1. A process of engaging a cap to a base in a sanitary fitting wherein said base comprises a handle section and an attachment section, said handle section comprises an uncovered handle area to be covered by said cap wherein said cap can be engaged with and disengaged from said base at said handle area, said base and said cap both comprising a locking means, said base locking means corresponding to said cap locking means when said cap is engaged in said base, comprising:

placing said cap onto said handle area in a first mounting direction perpendicular to said handle area, subsequently sliding said cap into a second mounting direction perpendicular to said first mounting direction to a point whereat it completely covers said uncovered handle area whereby a clamping effect occurs between the base locking means and the cap locking means.

5,699,588
DEVICE OF REMOVING TRASH AND DUST FROM RAW COTTON BEFORE CARDING IN THE PREPARATORY BY APPLYING A HIGH-VOLTAGE STATIC ELECTRICITY
Han-Hsing Hsiung; Hsin-Hsiung Chiou, and Sheng-Fu Chiu, all of Taipei, Taiwan, assignors to China Textile Institute, Taipei, Taiwan
Filed Jun. 26, 1996, Ser. No. 670,634
Int. Cl.⁶ D01G *1/00;* **B03B** *7/00*
U.S. Cl. 19—66 R **1 Claim**

1. A device for removing trash and dust from raw cotton before

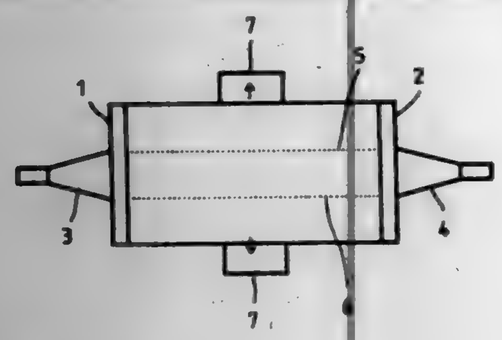

carding, comprising:

a longitudinally extended housing;

a pair of non-conductive plastic plates disposed on opposing longitudinal end of said housing, one of said pair of plastic plates having a trumpet-shaped inlet and the other of said pair of plastic plates having a trumpet-shaped outlet for passing raw cotton therethrough;

a pair of copper plates extending longitudinally within said housing between said pair of plastic plates in spaced parallel relationship, said pair of copper plates being spaced one from the other within an approximating range of 5–15 cm, each of said pair of copper plates having a plurality of holes formed therethrough, each of said plurality of holes having a diameter within an approximating range of 4–8 mm and each of said pair of copper plates having a thickness in an approximating range of 1–5 mm;

a source of static electricity connected between said pair of copper plates, said source of static electricity having a voltage within an approximating range of 30–60 kV; and,

a pair of suction pumps connected respectively to an upper and a lower portion of said housing, said pair of suction pumps providing a suction in an approximating range of 30–100 Pa for removing trash and dust from the raw cotton.

5,699,589
LASER CLEANING AND BLEACHING APPARATUS
William G. Ripley, 4218 88th St., Lubbock, Tex. 79423, and David A. Ripley, 2702 Genoa #A1, Lubbock, Tex. 79404
Filed May 3, 1996, Ser. No. 642,455
Int. Cl.⁶ D01G *9/00;* **D06M** *10/00;* **D06L** *3/12*
U.S. Cl. 19—200 **17 Claims**

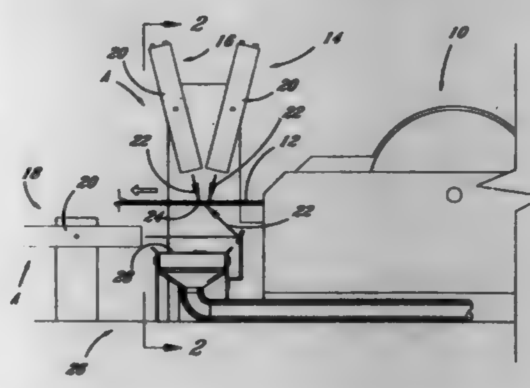

7. A fiber web bleaching and cleaning arrangement operative to remove micro dust and trash from fibers forming a moving fiber web while bleaching said fibers, said arrangement comprising:

conveying apparatus for conveying a fiber web in and from first locations to and through second locations;

support structure arranged adjacent said conveying apparatus, said support structure carrying at least one bank of ultra-violet lasers which are operative to direct ultra-violet light beams onto said fiber web, said ultraviolet light beams acting as fiber bleaching and cleaning apparatus, said fiber cleaning and bleaching apparatus being arranged at least over a portion of said fiber web; whereby,

said bleaching and cleaning apparatus is operative to impact upon said fibers of said moving fiber web in a continuous manner causing said micro dust and trash to separate and fall away from said fibers while simultaneously bleaching said fibers of said fiber web.

5,699,590
CLASP WITH UNFOLDING BUCKLE
Francis Albert Erard, La Chaux-de-Fonds, and Michel Paul Ratajski, Bienne, both of Switzerland, assignors to Grand-Jean S.A., La Chaux-de-Fonds, Switzerland
Filed Nov. 15, 1996, Ser. No. 746,777
Claims priority, application France, Nov. 21, 1995, 95 013802
Int. Cl.⁶ A44C *5/00*
U.S. Cl. 24—71 J **9 Claims**

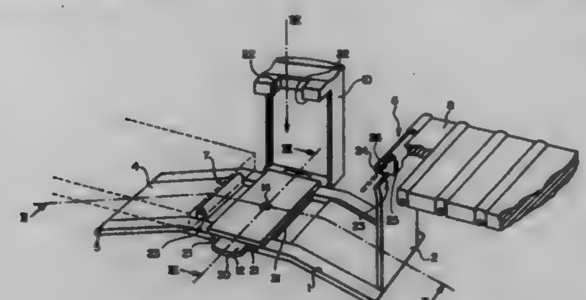

1. A bracelet clasp of the type with an unfolding buckle comprising a base, at least one first strip capable of folding down onto the base, the base and the first strip being attached to each other by one of their ends by means of a first hinge, the other end of the first strip having means for fixing a first strand of the bracelet, a cover locking the first strip in a folded down position on the base, said cover being mounted on said base by means of a hinge so as to effect lateral rocking with respect to the longitudinal direction of the bracelet, and a push button mounted in the base to lock said cover onto said base, wherein said clasp comprises means for the instantaneous raising of said cover from said base, without manual intervention, when pressure is manually exerted on the push button to unlock the cover from said base.

5,699,591
SECURITY ANCHOR
Roger Kane, 645A Hembree Pkwy., Roswell, Ga. 30076
Filed May 29, 1996, Ser. No. 654,591
Int. Cl.⁶ E05B *73/00;* **F16G** *11/00*
U.S. Cl. 24—304 **20 Claims**

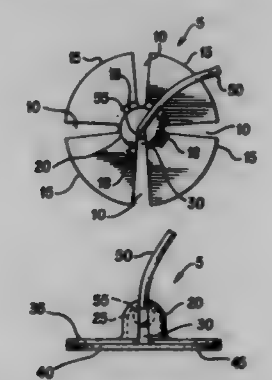

1. A security anchor for preventing theft of an article, comprising:

a support structure having a cavity therein for attaching a cable to an article to be protected against theft, a first surface through which the cable extends and a second surface opposite the first surface and having an adhesive layer for attachment to the article;

a plurality of wing slots within the support structure to divide the support structure into a corresponding plurality of wings, each wing being defined between an adjacent pair of wing slots, one of the plurality of wing slots communicating with the cavity for attaching one end of the cable to the support structure; and

a hinge area for each wing located between the adjacent pair of wing slots, the hinge area allowing one wing to flex independently of another wing to allow the support structure to conform to curved surfaces on the article.

5,699,592
CONCEALED WOVEN SLIDE FASTENER
Muchiji Shimono, Toyama-ken, Japan, assignor to YKK Corporation, Tokyo, Japan
Filed Feb. 27, 1997, Ser. No. 807,597
Claims priority, application Japan, Feb. 29, 1996, 8-043406
Int. Cl.⁶ A44B *19/00*
U.S. Cl. 24—432 **5 Claims**

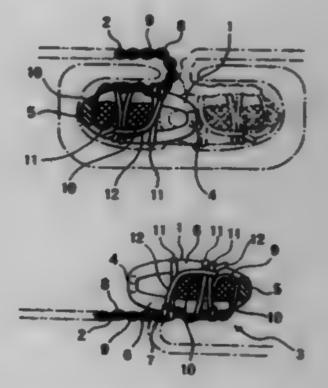

1. A concealed woven slide fastener stringer comprising:

(a) a fastener tape woven of a plurality of foundation warp yarns and a double-pick foundation weft yarn;

(b) a coiled fastener element attached to a folded inner margin of said fastener tape by a number of anchoring warp yarns and a double-pick anchoring weft yarn, which are woven in said fastener tape simultaneously with weaving of the fastener tape 2, and having a succession of coupling heads facing inwardly, a succession of connecting portions facing outwardly, and a succession of upper and lower legs;

(c) a plurality of core cords inserted through said coiled fastener element at a side toward said connecting portions and sandwiched between the succession of upper legs and the succession of lower legs; and

(d) said anchoring warp yarns extending over said upper legs (6) and being interlaced with said foundation weft yarn, said anchoring weft yarn being interlaced with some of said anchoring warp outer surface of one of said core cords which is disposed on a side toward said coupling heads, and crossing said foundation warp at a turnover portion of said folded inner margin of said fastener tape.

5,699,593
LOOP FASTENING MATERIAL
Byron M. Jackson, Stacy, Minn., assignor to Minnesota Mining & Manufacturing Company, Saint Paul, Minn.
Filed Aug. 30, 1996, Ser. No. 706,007
Int. Cl.⁶ A44B *21/00*
U.S. Cl. 24—445 **48 Claims**

1. A loop fastening material for engaging a suitable male mechanical fastening element comprising a backing substrate of an oriented sheet material in a first plane having a first face and a second face and substantially continuously attached to at least the first face a plurality of discrete, multi-filament transversely expanded yarns, said yarns being in a second plane coplanar with the first plane, such yarn filaments providing open loop structures and said yarns extending lengthwise in a first direction with said

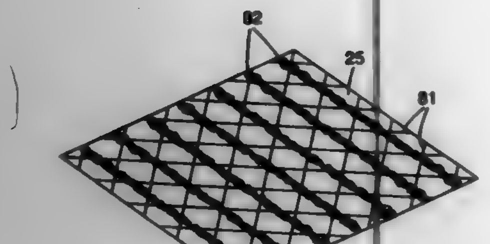

sheet material being orientated in a direction substantially transverse to said first direction.

5,699,594
SEAT BELT BUCKLE SPRING
Stephen C. Czank, Shelby Township; Robert J. Desmarais, Almont, and Stephen M. Arnold, Yale, all of Mich., assignors to TRW Vehicle Safety Systems, Inc., Lyndhurst, Ohio
Filed Aug. 28, 1995, Ser. No. 520,138
Int. Cl.[6] A44B *11/26*
U.S. Cl. 24—632 **14 Claims**

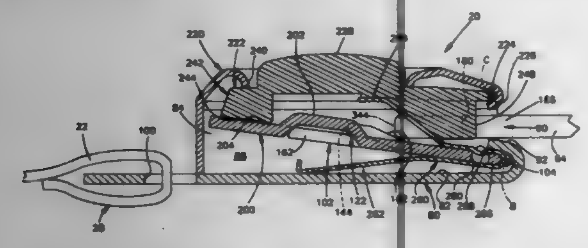

1. A buckle comprising:
a base for receiving first and second tongues of a vehicle seat belt system;
latch means supported by said base for connecting the first and second tongues with said base, said latch means being movable between a first position connecting the first and second tongues with said base and a second position at which the first and second tongues are disconnected from said base;
a pushbutton movable to an actuated position to move said latch means from the first position to the second position; and
biasing means having a first portion for biasing said latch means toward the first position and a second portion to be located between the tongues when the tongues are received by said base, said second portion biasing said pushbutton away from the actuated position.

5,699,595
APPARATUS FOR NEEDLING A FIBROUS WEB
Günther Feyerl, Linz, Austria, assignor to Textilmaschinenfabrik Dr. Ernst Fehrer Aktiengesellschaft, Leonding, Austria
Filed Oct. 16, 1996, Ser. No. 733,023
Claims priority, application Austria, Oct. 18, 1995, A 1731/95
Int. Cl.[6] D04H *18/00*
U.S. Cl. 28—107 **6 Claims**

1. An apparatus for needling a fibrous web, which comprises
(a) a row of needle beams arrayed adjacently each other in a direction of an operating width, the needle beams being adapted to be attachable to exchangeable needle boards,
(b) means for driving the needle beams with the needle boards up and down in a reciprocating motion path,
(c) guidance means for the fibrous web, the guidance means comprising
(1) a fibrous web support and
(2) a stripper positioned between the needle beams and the support, and

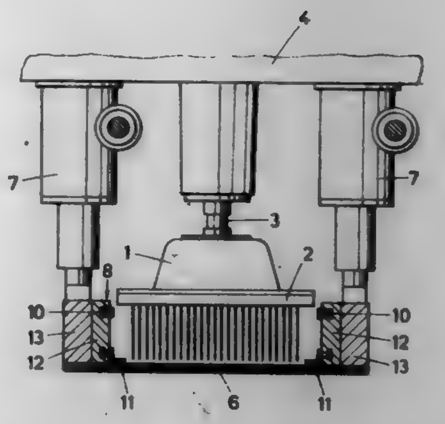

(d) a conveyor device for conveying the exchangeable needle boards to and from the needle beams, the conveyor device extending alongside the row of needle beams and comprising
(1) revolving endless traction means arranged at each side of the needle beams outside the reciprocating motion path, and
(2) needle board entrainment elements in the form of bearing flanges for supporting side edges of the needle boards, the bearing flanges being carried by the traction means and being repositionable between a conveying position wherein the flanges project into the reciprocating motion path and an inoperative position wherein the flanges are outside the reciprocating motion path of the needle boards attached to the needle beams.

5,699,596
APPARATUS FOR NEEDLING A FIBROUS WEB
Ernst Fehrer, Auf der Gugl 28, A-4020 Linz, Austria
Filed Oct. 11, 1996, Ser. No. 729,487
Claims priority, application Austria, Oct. 16, 1995, A 1713/95; Dec. 11, 1995, A 2001/95; Feb. 6, 1996, A 212/96
Int. Cl.[6] D04H *18/00*
U.S. Cl. 28—115 **10 Claims**

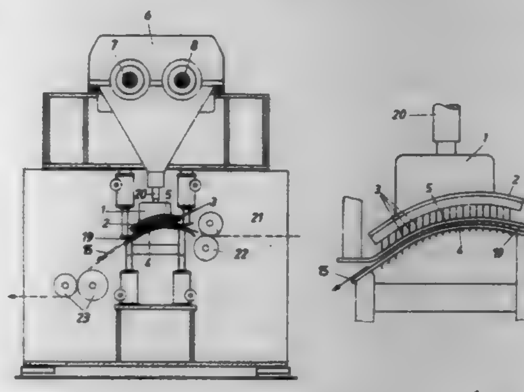

1. An apparatus for needling a fibrous web passing through the apparatus in one direction, which comprises
(a) a needle board driven back and forth in a needling direction,
(b) needles carried by the needle board, extending in the needling direction and defining a needling path when the needle board is driven back and forth, and
(c) a stationary support opposite the needle board in the needling direction, the stationary support comprising in the needling path
(1) two support sections inclined in opposite directions in the one direction and
(2) a transitional support section between the two support sections, the transitional support section smoothly merging with the two oppositely inclined support sections.

5,699,597
METHOD OF MANUFACTURING A TANTALUM SOLID STATE ELECTROLYTIC CAPACITOR
Shinji Nakamura, and Chojiro Kuriyama, both of Kyoto, Japan, assignors to Rohm Co., Ltd., Kyoto, Japan
Filed May 26, 1995, Ser. No. 452,433
Claims priority, application Japan, May 30, 1994, 6-116351
Int. Cl.[6] H01G *9/012*
U.S. Cl. 29—25.03 **6 Claims**

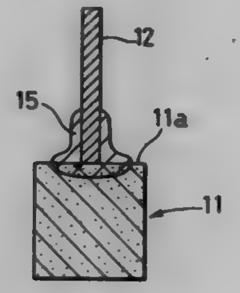

1. A capacitor device manufacturing method comprising the steps of:
preparing a tantalum sintered body having a copper or aluminum lead wire on one end surface thereof;
applying an insulating material to a surface of a root portion of the lead wire adjacent to the tantalum sintered body;
drenching the tantalum sintered body and a part of the root portion of the lead wire, to which the insulating material is applied, in a chemical conversion solution;
causing anodic oxidation by applying a current between the lead wire and the chemical conversion solution to form a dielectric film on a surface of the tantalum sintered body;
forming a solid state electrolytic layer on a surface of the dielectric film; and
forming a cathode electrode film on a surface of the solid state electrolytic layer.

5,699,598
MACHINE TOOL WITH A PLURALITY OF SPINDLES
Norbert Hessbrüggen, Eschenbach, and Heinz Steinbach, Ulm-Gögglingen, both of Germany, assignors to EMAG-Maschinen Vertriebs- und Service GmbH, Salach, Germany
Filed Apr. 12, 1996, Ser. No. 630,057
Claims priority, application Germany, Apr. 13, 1995, 195 14 058.3
Int. Cl.[6] B23B *7/04*; **B23Q** *5/22*; **B23C** *1/10*
U.S. Cl. 29—27 C **13 Claims**

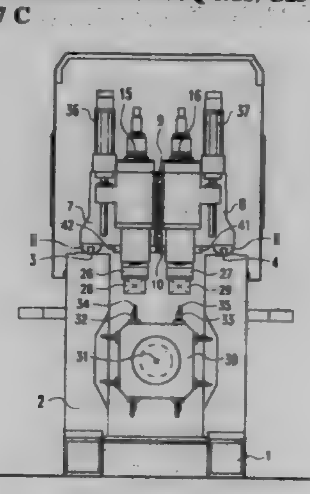

1. A machine tool comprising:
a machine base body;
a plurality of spindles for the simultaneous or varying, separate machining of a plurality of workpieces;
two partial slides each for receiving at least one spindle, which spindles are drivable about their rotational axes and movable in their axial direction, said partial slides being supported directly on an interface relative to one another, said interface allowing said partial slides to be moved jointly or relative to one another in a direction perpendicular to a movement direction of the spindles, and which partial slides form a combined slide; and
wherein only the combined slide is configured to be guided by a guide arrangement on the machine base body.

5,699,599
MULTIPLE AXIS YOKE FOR LARGE SCALE WORKPIECE ASSEMBLY SYSTEMS
Peter B. Zieve, 5766 27th Ave. NE., Seattle, Wash. 98105
Filed Apr. 4, 1996, Ser. No. 627,593
Int. Cl.[6] B23B *11/00*
U.S. Cl. 29—34 B **21 Claims**

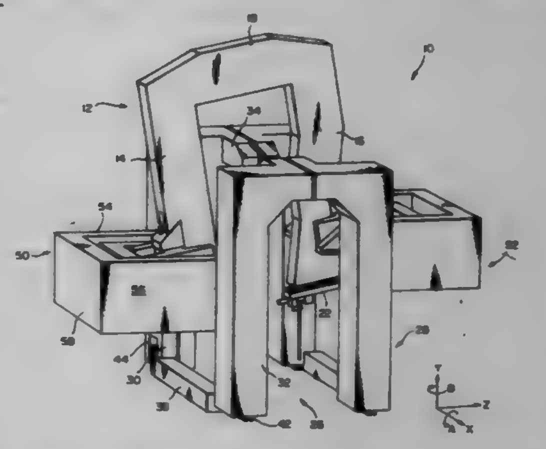

1. A yoke assembly system for large-scale part assembly, comprising:
a yoke member comprising two depending leg portions and an intermediate portion;
tool means for accomplishing assembly operations secured to the depending leg portions of the yoke, wherein the tool means defines a tool point for contact with a work piece being assembled; and
means supporting each leg of the yoke member at separate pivot points such that the yoke member moves longitudinally in an X axis direction and vertically in a Y axis direction which is orthogonal to the X axis direction, and rotates substantially about at least one of: the Y axis and (b) the X axis.

5,699,600
APPARATUS FOR AUTOMATICALLY PRESS-FITTING A TURNTABLE
Young-Suk Choi, Seoul, Rep. of Korea, assignor to Daewoo Electronics Co., Ltd., Seoul, Rep. of Korea
Filed May 30, 1996, Ser. No. 655,779
Claims priority, application Rep. of Korea, May 31, 1995, 95-14134; May 31, 1995, 95-14136
Int. Cl.[6] B23P *19/02*
U.S. Cl. 29—251 **16 Claims**

1. An apparatus for automatically press-fitting a turntable comprising:
a driving motor fixing part for being installed with an attachable driving motor;
a first press-fitting part for pressively-fixing said driving motor into said driving motor fixing part;
a second press-fitting part for moving said driving motor fixing part press-fitted with said driving motor in the direction of a motor shaft; and

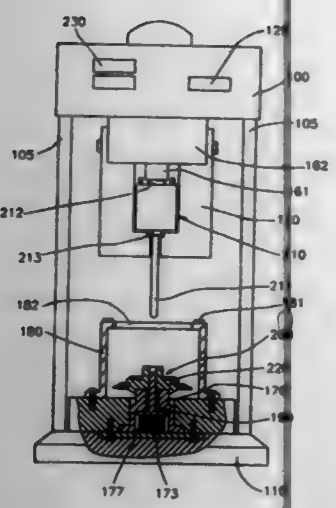

a turntable assembly fixing part for being installed with an attachable turntable assembly, the turntable assembly fixing part having a central axis arranged at an extending line of a shaft of the driving motor to permit a rotating shaft of said turntable assembly to be exactly coaxial with said driving motor when said turntable assembly is installed at the turntable assembly fixing part,

said turntable assembly fixing part having

an annular projection formed coaxially with and on an upper portion of the turntable assembly fixing part, said annular projection being inserted into a groove of round shape formed on a supporting shaft member of said turntable assembly,

a guiding slot for being penetrated up and down along the central axis of the turntable assembly fixing part, a space formed under the guiding slot having a diameter greater than that of the guiding slot, and

a guide pin installed in the guiding slot and the space of the turntable assembly fixing part, the guide pin being formed to have a lower end installed to be in contact with an elastic spring and an upper end penetrating through the guiding slot and protruding over the annular projection, and the guiding slot for allowing a central axis of the guide pin to be exactly coaxial with the motor shaft of the driving motor.

5,699,601
SNAP TAB FASTENER AND DISASSEMBLY TOOL THEREFOR

Peter H. Gilliam, Novi, and David William Lumley, Livonia, both of Mich., assignors to Ford Motor Company, Dearborn, Mich.

Filed Aug. 30, 1995, Ser. No. 521,506
Int. Cl.⁶ B25B *27/14*

U.S. Cl. 29—278 **15 Claims**

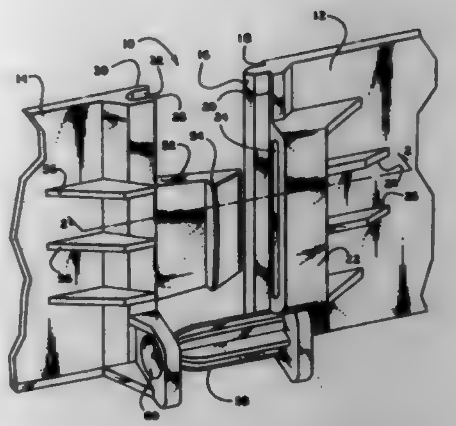

1. A snap tab fastener for connecting first and second housing members together, comprising:

a tongue extending from an end portion of said first housing member defining a first space below said tongue and a second space above said tongue;

a loop on the end portion of said first housing member above said tongue having an opening in communication with said second space, said loop having a central portion and a center;

a first groove member extending from said second housing member;

a second groove member, spaced from said first groove member, extending from said second housing member defining a groove between said first and second groove members for receiving said tongue; and

a tab extending from said second groove member in a direction toward said tongue and engageable with said loop to lock said first and second housing members together, said tab having a locking member that protrudes through said loop, said loop snapping into position over said tab locking said housing members together, said locking member having a horizontally extending raised curved portion that curves vertically upward to contact said central portion of said loop to expand said loop from said center horizontally outward during insertion of said locking member in said loop.

5,699,602
APPARATUS FOR ADUSTING POSITION OF A MACHINING UNIT ON A CHIP CARRIER MAKER

Hua-Shan Hsu, Taipei, Taiwan, assignor to Smooth Ocean Enterprise Co., Ltd., Taipei, Taiwan

Filed Jul. 5, 1996, Ser. No. 676,038
Int. Cl.⁶ B21B *15/00*

U.S. Cl. 29—335 **4 Claims**

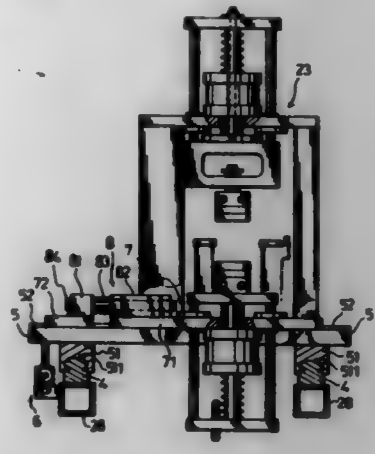

1. In a device for adjusting the position of a machining unit on a chip carrier making apparatus, the machining unit machining a tape consisting of a row of interconnected chip carriers which are integrally formed with each other, the apparatus including a stationary machine frame, and the device including a longitudinal adjustment unit capable of moving the machining unit in a direction parallel to the tape, and a transverse adjustment unit capable of moving the machining unit in a direction perpendicular to the tape, the improvement wherein said device comprises:

two parallel sliding rails fixed on the machine frame and extending in a direction parallel to the tape; and

a receiving seat mounted slidably on said sliding rails so as to guide said receiving seat to slide along the sliding rails when the longitudinal adjustment unit is actuated, said receiving seat having a top surface formed with a slide slot which extends in a direction perpendicular to the tape and which receives slidably the machining unit so as to guide the machining unit to slide along the slide slot when the transverse adjustment unit is actuated; wherein said transverse adjustment unit includes:

a movable support plate disposed slidably within said slide slot of said receiving seat and carrying the machining unit on said movable support plate;

a fixed support plate fixed on said receiving seat;

a first fixing block fixed on said fixed support plate;

a second fixing block fixed on said movable support plate and having a threaded hole formed through said second fixing block;

two parallel guide rods extending through said first and second fixing blocks;

two coiled compression springs respectively sleeved on said guide rods between said first and second fixing blocks; and

an adjustment bolt journalled on said fixed support plate and extending threadedly through said threaded hole of said second fixing block so that rotation of said adjustment bolt on said fixed support plate will move said movable support plate and said machining unit along said slide slot of said receiving seat.

5,699,603
SEALING OR GUIDING ASSEMBLIES AND METHODS OF MAKING THEM

Heinz-Peter Backes, Wegberg, and Heinz Andrzejewski, Viersen, both of Germany, assignors to Draftex Industries, Limited, Edinburgh, Scotland

Division of Ser. No. 370,726, Jan. 10, 1995, abandoned. This application Mar. 20, 1996, Ser. No. 618,856

Claims priority, application United Kingdom, Jan. 11, 1994, 9400408; Apr. 25, 1994, 9408136

Int. Cl.⁶ B23P *11/02;* **B29C** *45/14;45/36*

U.S. Cl. 29—450 **4 Claims**

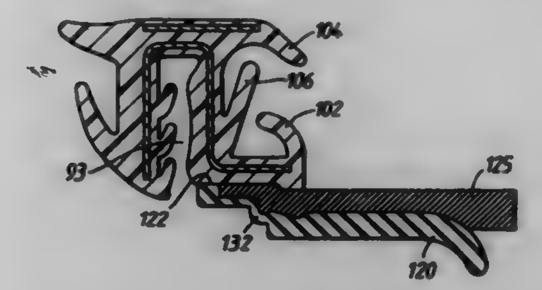

1. A method of making a sealing and guiding assembly comprising a length of sealing or guiding strip and a portion of flexible material attached to the strip, the strip having a region susceptible to damage by heat and the portion of flexible material overlapping a predetermined area of the strip immediately adjacent said region, comprising the steps of

placing the length of sealing or guiding strip in a predetermined position,

providing a mold for defining a mold cavity, the mold cavity extending from and communicating with a minor part, only, of said area of said strip, said minor part of said area being a minor part which is most distant from said region, the step of providing a mold for defining a mold cavity including the step of placing a heat-blocking plate over said major part of said area, said plate having a surface shaped to match a corresponding face of the portion of flexible material,

said mold cavity further defining a locking formation in a surface of the portion of flexible material and defining said portion of the flexible material to overlap said area and to extend substantially therebeyond,

carrying out a molding operation in the mold cavity to form said portion of flexible material connected with the strip over said minor part of said area but spaced from said major part of said area by said plate such that said region susceptible to damage by heat is protected by said plate from damage by the heat of the molding operation,

removing said plate and removing said length of sealing or guiding strip with said portion of flexible material moldingly connected thereto from said mold cavity, and

thereafter moving said portion of flexible material into a position in which it is in contact with the strip over said major part of said area and in which said portion of flexible material is locked by said locking formation.

5,699,604
SYSTEM FOR PRODUCING GUIDE RAIL

Kiyozumi Fukui, Tokyo, Japan, assignor to Teijin Seiki Co., Ltd., Osaka, Japan

Continuation of Ser. No. 410,331, Mar. 24, 1995, Pat. No. 5,582,068. This application Feb. 22, 1996, Ser. No. 605,667

Claims priority, application Japan, Apr. 6, 1994, 6-68233

The portion of the term of this patent subsequent to Mar. 24, 2015, has been disclaimed.

Int. Cl.⁶ B23P *23/00*

U.S. Cl. 29—564 **10 Claims**

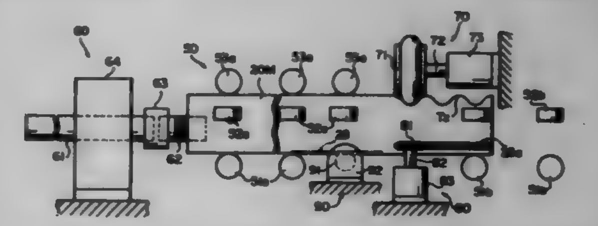

1. A production apparatus for producing a guide rail having both side face portions formed with parallel rail portions, and a coupler portion to be coupled with a stationary member, said parallel rail portions having their respective center axes extending in parallel with each other, comprising:

supporting means for supporting a machining material to allow said machining material only to move in its longitudinal direction;

transferring means for transferring said machining material at a predetermined movement speed in said longitudinal direction of said machining material;

a pair of rail portion machining units respectively having tools for machining said parallel rail portions of said guide rail in parallel with each other while said machining material is being transferred by said transferring means under the state that said machining material is supported by said supporting means, each of said tools of said rail portion machining units being positioned to have said machining material cut at a predetermined depth; and

a coupler portion machining unit having a tool for machining said coupler portion of said guide rail while said machining material is being transferred by said transferring means under the state that said machining material is supported by said supporting means, said coupler portion machining unit being positioned to have said machining material cut at a predetermined depth.

5,699,605
METHOD FOR FORMING A MAGNETIC THIN FILM HEAD WITH RECESSED BASECOAT

Nurul Amin, Burnsville, Minn.; John Bortins, Goleta, and Ying Yan, San Jose, both of Calif., assignors to Seagate Technology, Inc., Scotts Valley, Calif.

Division of Ser. No. 247,524, May 23, 1994. This application Apr. 12, 1995, Ser. No. 421,429

Int. Cl.⁶ G11B *5/42*

U.S. Cl. 29—603.14 **9 Claims**

1. A method of forming a thin film magnetic head, comprising: depositing a basecoat on a substantially planar substrate;

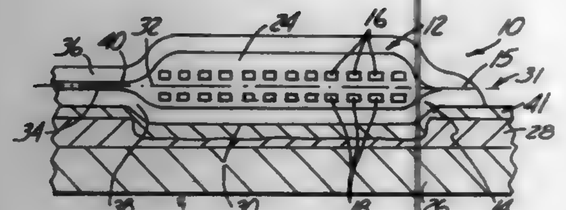

forming a recessed region in the basecoat, wherein the recessed region has a depth;
depositing a magnetic bottom pole piece having a bottom pole leg and a bottom pole tip on th basecoat, wherein the bottom pole leg is deposited in the recessed region of the basecoat;
depositing insulating material on the magnetic bottom pole piece, wherein the insulating material has a plurality of electrical conductors extending therethrough; and
depositing a magnetic upper pole piece having an upper pole leg overlying the bottom pole leg and an upper tip overlying the bottom pole tip forming a transducing gap for reading and writing magnetically encoded information, wherein the transducing gap defines a plane through the thin film magnetic head and the upper and bottom pole pieces are generally symmetric about the plane.

5,699,606

METHOD OF MANUFACTURING A RADIANT ELECTRIC HEATER

Joseph Anthony McWilliams, Droitwich, United Kingdom, assignor to Ceramaspeed Limited, United Kingdom

Continuation of Ser. No. 409,692, Mar. 24, 1995, abandoned, which is a continuation of Ser. No. 193,565, Feb. 8, 1994, Pat. No. 5,453,597. This application Nov. 14, 1995, Ser. No. 557,570

Claims priority, application United Kingdom, Feb. 11, 1993, 9302689

Int. Cl.⁶ H05B *3/00*

U.S. Cl. 29—611 **18 Claims**

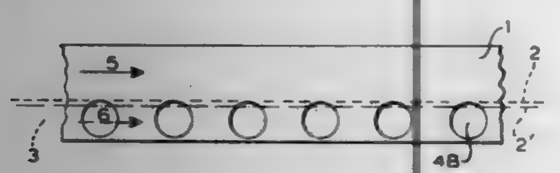

1. A method of manufacturing a radiant electric heater comprising:
providing a base of compacted microporous thermal and electrical insulation material;
providing a heating element in the form of an elongate electrically conductive strip, the strip being of uniform thickness and composed of an elongate continuous portion and an elongate discontinuous portion integral and coplanar with the continuous portion, the discontinuous portion being provided with a plurality of discontinuities therein such that in operation of the heater current flow in the discontinuous portion is reduced or eliminated; and
pressing the heating element edgewise into the base so as to at least partially embed the discontinuous portion of the heating element in the base with the insulation material entering the discontinuities to thereby enhance securement of the heating element to the base.

5,699,607

PROCESS FOR MANUFACTURING AN ELECTRICAL DEVICE COMPRISING A PTC ELEMENT

Katherine M. McGuire, Clarendon Hills, and Mike A. Ward, Chicago, both of Ill., assignors to Littelfuse, Inc., Des Plaines, Ill.

Filed May 3, 1996, Ser. No. 642,655

Int. Cl.⁶ H01C *17/28;7/02*

U.S. Cl. 29—612 **27 Claims**

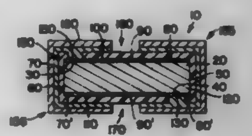

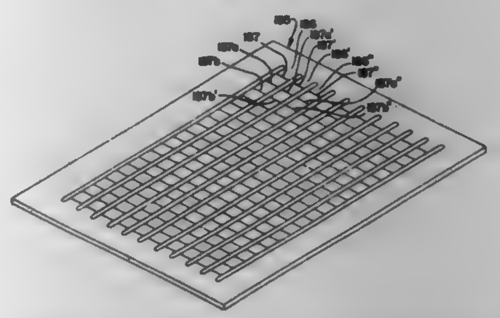

26. A method for manufacturing an electrical device comprising the steps of:
providing a laminar conductive sheet having a top and bottom surface, a first electrode formed on the top surface and a second electrode formed on the bottom surface;
creating a plurality of strips in the laminar conductive sheet;
coating the strips in the laminar conductive sheet with an insulating layer leaving portions of the first and second electrodes exposed to form a plurality of contact points;
coating the strips in the laminar conductive sheet with a first conductive layer, the first conductive layer being in contact with the electrodes at each contact point;
forming a plurality of electrically non-conductive gaps in the first conductive layer; and,
dividing each strip in the laminar conductive sheet into a plurality of electrical devices.

5,699,608

CONNECTOR HOLDING DEVICE

Tokuji Nakamura, Yokkaichi, Japan, assignor to Sumitomo Wiring Systems, Ltd., Mie, Japan

Filed Feb. 23, 1996, Ser. No. 606,403

Claims priority, application Japan, Feb. 27, 1995, 7-038666

Int. Cl.⁶ H01R *43/20*

U.S. Cl. 29—747 **10 Claims**

1. A connector holding device for holding a connector having a

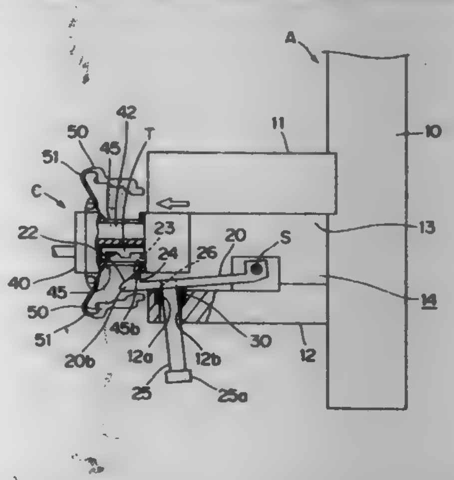

rear face, an upper face, a lower face, a terminal insertion opening formed on the rear face, and a retainer attachment opening formed on at least one of the upper face and the lower face thereof for attachment of a retainer for preventing terminal withdrawal, the connector holding device comprising:
a base;
an upper support member projecting from the base;
a lower support member projecting from the base;
a pair of side support members connecting the upper and lower support members, the upper support member, the lower support member and the side support members defining a connector holding space; and
terminal insertion guide means provided in association with the connector holding space and facing the retainer attachment opening when a connector is held by the connector holding device.

5,699,609

METHOD OF MAKING POWER SUBSTRATE ASSEMBLY

Christopher J. Wieloch, Brookfield, Wis., assignor to Allen-Bradley Company, Inc., Milwaukee, Wis.

Filed Apr. 12, 1995, Ser. No. 421,588

Int. Cl.⁶ H05K *3/36*

U.S. Cl. 29—830 **15 Claims**

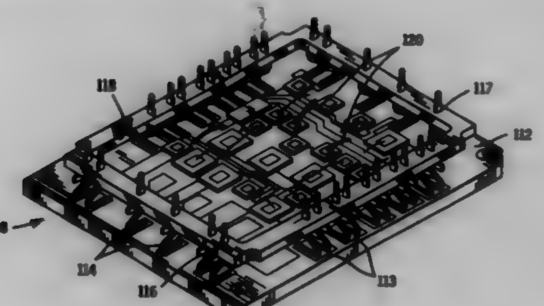

1. A method for fabricating a power substrate assembly comprising the steps of:
(a) forming a circuit on a power substrate module, the circuit including conducting pads for transmitting power to and from the circuit;
(b) depositing solder material on the conducting pads;
(c) forming a substantially planar fixture having apertures for receiving a plurality of conductors;
(d) inserting conductors permanently into the apertures, a portion of the conductors extending through the fixtures portions of the fixture surrounding the apertures contacting the conductors to maintain the conductors in desired positions on the fixture;
(e) positioning the fixture over the power substrate module to bring the conductors into contact with corresponding conducting pads; and
(f) melting solder material to connect the conductors to the power substrate module at the conducting pads.

5,699,610

PROCESS FOR CONNECTING ELECTRONIC DEVICES

Yuzo Shimada; Takayuki Suyama; Yoshimasa Tanaka, and Shinichi Hasegawa, all of Tokyo, Japan, assignors to NEC Corporation, Tokyo, Japan

Continuation-in-part of Ser. No. 423,455, Apr. 19, 1995. This application Jun. 7, 1995, Ser. No. 474,019

Claims priority, application Japan, Apr. 22, 1994, 6-083540; Jun. 20, 1994, 6-137581; Jul. 13, 1994, 6-161092; Jul. 22, 1994, 6-170628

Int. Cl.⁶ H05K *13/34*

U.S. Cl. 29—840 **14 Claims**

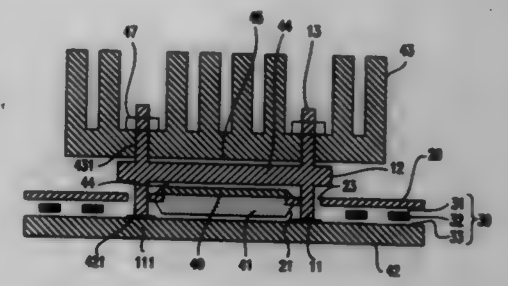

1. A process for connecting electronic devices, comprising steps of:
(a) preparing a first substrate having a first surface, a second surface, and a through-hole therebetween;
(b) preparing a second substrate having a first surface, a second surface, and a pad on said first surface of said second substrate;
(c) providing a solder on said pad of said second substrate;
(d) positioning said through-hole of said first substrate on said solder, said second surface of said first substrate and said first surface of said second substrate opposing one another;
(e) heating said solder to flow said solder into said through-hole of said first substrate and to protrude said solder from said through-hole of said first substrate, to couple said first substrate to said second substrate; and
(f) confirming one of an appearance of said solder on said first surface of said first substrate and whether at least a portion of said solder is protruding from said through-hole of said first substrate, thereby to judge a connection condition of said second surface of said first substrate to said first surface of said second substrate.

5,699,611

METHOD OF HERMETICALLY SELF-SEALING A FLIP CHIP

Garrett Isao Kurogi, Lakewood, and Matthew J. Swass, El Segundo, both of Calif., assignors to Hughes Electronics, Los Angeles, Calif.

Division of Ser. No. 260,056, Jun. 14, 1994, Pat. No. 5,578,874. This application Aug. 16, 1995, Ser. No. 699,886

Int. Cl.⁶ H05K *3/34*

U.S. Cl. 29—840 **1 Claim**

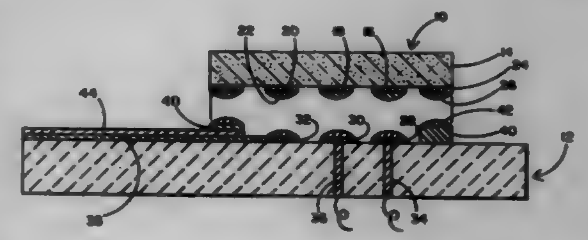

1. The method of hermetically sealing an integrated circuit-containing body to a substrate comprising the steps of:

forming the body so that one face thereof has I/O contacts thereon, so that said contacts correspond in position to said contacts on said substrates;
forming a barrier having a contact thereon on the face of the body adjacent the periphery of the body and positioned to surround the contacts;
forming corresponding contacts on the face of a substrate positioned so that when the body lines face-to-face on the substrate, the contacts are against each other;
forming a barrier, having a contact thereon, on the substrate surrounding the contacts on the substrate and positioned to lie against the barrier on the body when the contacts are in face-to-face contact;
attaching the body to the substrate at the barrier to create a hermetic seal around the contacts;
forming at least one printed wiring strip on the surface of said dielectric substrate;
forming an insulator layer over said printed wiring strip;
positioning said surrounding barrier on said substrate over said insulating layer so that said surrounding barrier is electrically isolated from said printed wiring strip; and
wherein the steps of forming a barrier on the face of the body and forming a barrier on the substrate includes the positioning of solder so that attachment and sealing is by means of reflow soldering and when the sealing is complete a fillet of solder is visible around the body at the substrate.

5,699,612
METHOD OF CHECKING CONNECTED STATE BETWEEN IC SOCKET AND PRINTED WIRING BOARD
Shuji Inoue, Ibaragi, and Kazuhisa Ozawa, Saitama, both of Japan, assignors to Intel Corporation, Santa Clara, Calif.
Division of Ser. No. 342,379, Nov. 18, 1994. This application Mar. 20, 1996, Ser. No. 618,686
Claims priority, application Japan, Mar. 17, 1994, 6-071270
Int. Cl.^{6} H01K *9/00*
U.S. Cl. 29—843 **17 Claims**

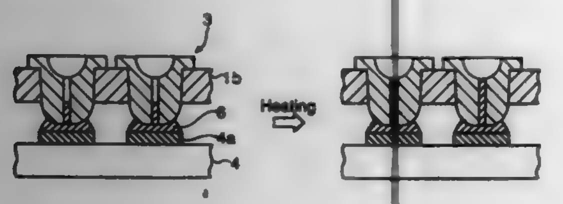

1. A method of checking whether a connecting portion of a pin terminal of an IC socket for an IC package is properly connected to a pattern on an upper surface of a printed wiring board by soldering, wherein said pin terminal has a through hole formed therein in an axial direction, said method comprising the step of:
visually recognizing a change in position of a surface of a solder, in the through hole, which is melted when the connecting portion between said IC socket and said printed wiring board is heated.

9. A method of checking a connection between a connecting portion of a pin terminal of an IC socket for an IC package and a pattern on a printed circuit board comprising the steps of:
filling a through hole in said pin terminal with solder;
connecting said pin terminal to said pattern;
reflowing said solder; and
detecting a change in a solder level in said through hole in said pin terminal.

5,699,613
FINE DIMENSION STACKED VIAS FOR A MULTIPLE LAYER CIRCUIT BOARD STRUCTURE
Ku Ho Chong, Arlington Heights, Ill.; Charles Hayden Crockett, Jr., Austin, Tex.; Stephen Alan Dunn, deceased, late of Georgetown, Tex., by Alice Catherine Dunn, independent administratrix; Karl Grant Hoebener, Georgetown, Tex., and Michael George McMaster, Vernonia, Oreg., assignors to International Business Machines Corporation, Armonk, N.Y.
Filed Sep. 25, 1995, Ser. No. 533,035
Int. Cl.^{6} H05K *3/10*
U.S. Cl. 29—852 **10 Claims**

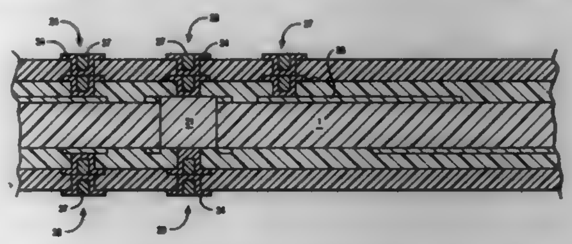

1. A method of manufacturing a multiple layer circuit board with stacked electrical interconnections, comprising the ordered steps of:
forming holes through a base laminate having a front side and a back side;
forming electrical interconnect patterns on the front and back sides of the base laminate adjacent the holes;
masking the holes from the front side of the base laminate;
filling the holes with a conductive polymer from the back side of the base laminate;
curing the conductive polymer to form conductive plugs through the holes;
forming a first dielectric layer on one of the front or back sides of the base laminate;
selectively removing regions of the first dielectric layer at selected number of the conductive plugs to form vias having openings through the first dielectric layer; the openings exposing the selected conductive plugs;
plating to form electrical connections through the openings of the vias at the selectively removed regions;
filling recesses produced by plating into the openings of the vias with conductive polymer; and
curing the conductive polymer to form conductive plugs within the recesses at the filled vias.

5,699,614
ATTACHABLE AND REMOVABLE HANDLE FOR FOOD SERVING UTENSILS
John P. Garneau, Sr., P.O. Box 50009, Lighthouse Point, Fla. 33064
Filed Aug. 4, 1995, Ser. No. 511,374
Int. Cl.^{6} A47J *43/28*
U.S. Cl. 30—142 **22 Claims**

1. A utensil comprising:

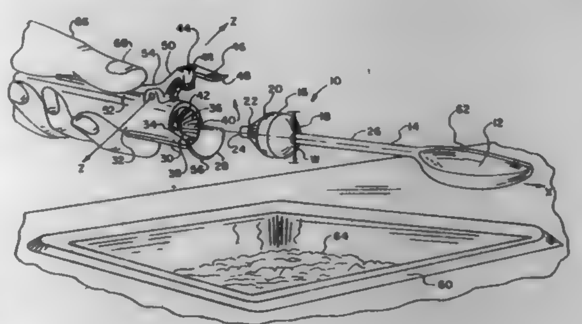

a utensil portion for serving food;
a shank having a first end and a second end, said utensil portion attached to said shank first end; and
a handle releasably secured to said shank second end by a clamp secured to said handle, said shank second end including one of a male member and a female member, and said handle including the other of a male member and a female member, said male member received by said female member, wherein said male member includes a serrated surface and said female member includes a serrated surface which is adapted to mate with said male member serrated surface.

5,699,615
POCKET-KNIFE
Shun-fu Chen, Taipei Hsien, Taiwan, assignor to Chia Yi Enterprises Co., Taipei Hsien, Taiwan
Filed Nov. 8, 1996, Ser. No. 745,623
Int. Cl.^{6} B26B *1/04*
U.S. Cl. 30—160 **4 Claims**

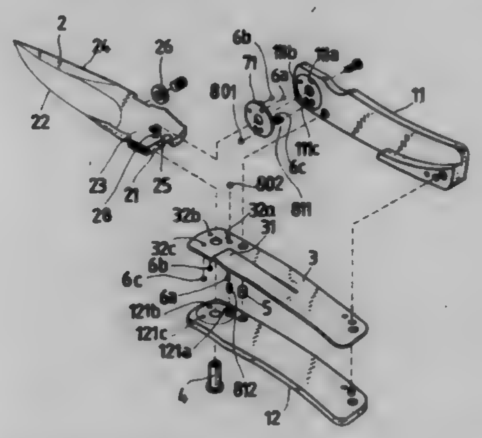

1. A pocket-knife allowing to be extended to an operative position or be folded to a storage position in more than one stage, comprising:
a handle including a first and a second side members which together define
a cavity between them at one side of said handle;
a blade pivotally connected at a rear portion to a front portion of said handle by means of a pivotal pin, allowing said blade to be turned about said pivotal pin relative to said handle to an open or operative position or to a closed or storage position; and
a locking means disposed between said first and said second side members of said handle to lock said blade in place when said blade is in said open or operative position or to release said blade from said open or operative position through a depression of said locking means, so that said blade can be folded and received into said cavity of said handle;
wherein said first and said second side members have a plurality of rotatable balls attached to inner surfaces of said first and said second side members around said pivotal pin, and said rotatable balls contacting with two side surfaces of said blade, allowing said blade to be opened or closed smoothly.

5,699,616
ELECTRIC HAIR TRIMMER
Hitoshi Ogawa, Hikone, Japan, assignor to Matsushita Electric Works, Ltd., Kadoma, Japan
Filed Jan. 5, 1996, Ser. No. 583,299
Claims priority, application Japan, Jan. 9, 1995, 7-001591
Int. Cl.^{6} B26B *19/20*
U.S. Cl. 30—201 **13 Claims**

1. A hair trimmer comprising:

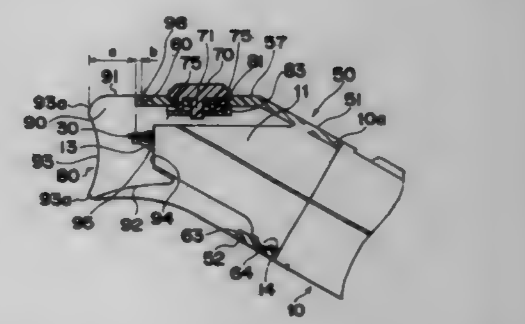

a casing having a longitudinal axis and also having an actuating device;
a cutter head disposed at one end of the casing and including a generally elongated fixed blade and a movable blade adapted to be driven by the actuating device so as to reciprocate relative to the fixed blade in a direction parallel to a lengthwise direction of the fixed blade to trim the hairs;
a hair restraint means for regulating the distance between the cutter head and the scalp, configured to permit the hairs to extend across a space between the cutter head and the hair restraint means in a substantially bundled form of a thickness equal to the distance between the scalp and the cutter head, said hair restraint means having a contact portion adapted to be held in contact with a scalp with a plane of relative sliding movement of the fixed and movable blades held generally perpendicular to the scalp, said contact portion being, relative to an imaginary plane extending orthogonal to the cutter head and touching tips of cutting teeth of the movable blade, spaced from the scalp a first distance which is relevant for the thickness of the hairs to be trimmed; and
a retainer edge arranged at a rearward position relative to the imaginary plane so as to regulate the quantity of the hairs to be trimmed during one working step to an amount corresponding to a second distance between the imaginary plane and the retainer edge.

5,699,617
MULTIPLE PURPOSE COMPOUND ACTION SNIPS
Mel Corrie Mock, Rocky Ford, Ga., assignor to Cooper Industries, Houston, Tex.
Filed Mar. 1, 1996, Ser. No. 609,690
Int. Cl.^{6} B26B *13/16*
U.S. Cl. 30—252 **17 Claims**

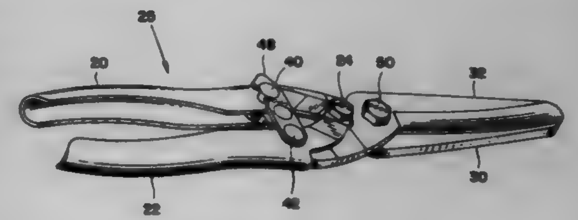

1. Compound action cutting snips, comprising:
a pair of handle members mutually connected at a handle pivot at a distal end of the handles, the handle members forming a handle for single hand use; and.
a pair of cutting blades, each blade having a proximal end attached to a pivot in a distal potion of one of the handles proximal to the handle pivot, and the blades mutually connected at a blade pivot, the handle pivot and blade pivot being located on an axial centerline of the snips, the handle pivot proximal to the blade pivot, so that converging movement of the handles causes converging movement of the blades;
the blades each having a cutting edge that has a curvature convex in the direction of the centerline of the snips;

wherein the blades are pivotable between a fully opened position and a closed position, a maximum cutting length being a free length of the blades when in the fully opened position,
wherein the maximum cutting length is at least 2.5 inches and a ratio of the maximum cutting length to the length of the handles is at least 0.4.

5,699,618
PASTA TOOLS
Michael Edward Barbera, 13314 Corte De Estepona, San Diego, Calif. 92128
Filed Dec. 27, 1995, Ser. No. 579,353
Int. Cl.^{6} A47J *43/28*
U.S. Cl. 30—322 **8 Claims**

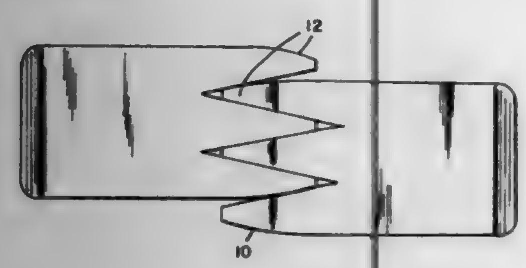

1. A two element utensil designed for the service and manipulation of salad, pasta and other food products comprising:
(a) a pair of scooping and gripping means, each of said scooping and gripping means having a substantially flat rectangular form which in turn has a first end and a second end, a first face and a second face,
(b) each of said first ends has at least two thick flattened and elongated triangular tines, said tines of one of the two element utensil is shaped to mesh in opposition with openings between the other of the openings between said tines of the other of the said two element utensil forming a slightly concave first face, substantially without void
(c) each of said first end has at least two thick flattened and elongated triangular tines, forming a slightly concave first face,
(d) each of said second end is characterized by having a slightly rounded, thickened, and wide, spade like, handle.

5,699,619
CHAIN SAW DRIVE SPROCKET DEVICE
Erik Sundström, Sandviken, Sweden; assignor to Sandvik AB, Sandviken, Sweden
PCT No. PCT/SE94/00757, § 371 Date Apr. 18, 1996, § 102(e) Date Apr. 18, 1996, PCT Pub. No. WO95/06549, PCT Pub. Date Mar. 9, 1995
PCT Filed Aug. 22, 1994, Ser. No. 604,978
Claims priority, application Sweden, Sep. 3, 1993, 9302842
Int. Cl.^{6} B27B *17/08*
U.S. Cl. 30—383 **8 Claims**

1. A chain saw comprising:
a saw chain including side links, cutter links, and drive links with inwardly projecting tangs;
a rotary drive shaft;
a sprocket mounted on the rotary drive shaft, the sprocket including radially outwardly open first recesses spaced circumferentially apart, and first cylindrical surfaces projecting from opposite side edges of the first recesses;
a ring arranged eccentrically with respect to the sprocket, the sprocket disposed within the ring, the ring including radially outwardly open second recesses for receiving the tangs of the drive links for transmitting tangential forces thereto, and second cylindrical surfaces projecting from opposite side edges of the second recesses for transmitting radial forces to

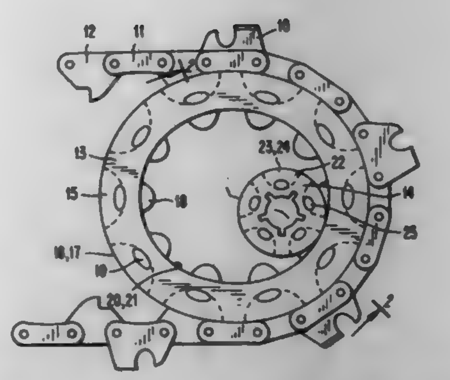

the side links, the ring further including inward protrusions receivable in the first recesses for receiving tangential forces from the sprocket, and third cylindrical surfaces projecting from opposite sides of the protrusions, the third cylindrical surfaces being in contact with the first cylindrical surfaces for transmitting radial forces therebetween, the third cylindrical surfaces having a larger diameter than the first cylindrical surfaces and being supported radially solely by the sprocket.

5,699,620
APPARATUS FOR SHARPENING CRAYON MARKING INSTRUMENTS TO FORM AN IMPROVED ARCUATE SAFETY MARKING TIP
Frederick B. Hadtke, New Providence; Linda El-Fakir, Edison, and Greg M. Rosen, Bedminster, all of N.J., assignors to Pentech International Inc., Edison, N.J.
Filed Dec. 11, 1996, Ser. No. 766,536
Int. Cl.^{6} B43L *23/08*
U.S. Cl. 30—452 **21 Claims**

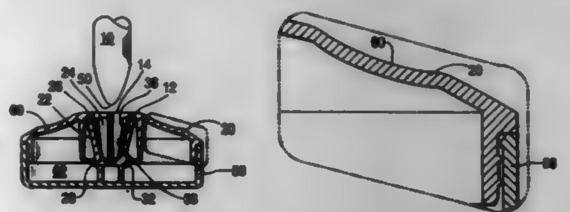

1. An improved apparatus for safely sharpening crayon marking instruments made from waxes, plastics and similar soft materials, said apparatus comprising:
A. a protective ring means defining an inlet aperture means oriented laterally therein and adapted to receive a crayon marking instrument extending therethrough to facilitate sharpening thereof, said protective ring means being greater than 0.5625 inches in diameter to facilitate sharpening of crayon marking instruments of difference sizes;
B. an inlet flange means fixedly secured to said protective ring means and extending laterally outwardly therefrom to facilitate mounting of the sharpening apparatus;
C. a plurality of support members fixedly secured to said protective ring means and extending outwardly longitudinally therefrom, said support members and said protective ring means defining a sharpening zone means therebetween adapted to receive a crayon marking instrument therein for sharpening thereof, each of said support members including a proximate end fixedly secured to said protective ring means and a distal end spatially disposed from said proximate end thereof, each adjacent pair of said support members cooperating together to define a debris outlet means therebetween for allowing exiting of materials removed from the crayon marking instrument during sharpening thereof;
D. a base member positioned spatially disposed longitudinally from said protective ring means and fixedly secured to each of said distal ends of said support members;

E. a plurality of main sharpening blades each of which being fixed secured to each of said support members and extending therealong, each of said main sharpening blades defining an arcuate cutting edge extending therealong and positioned adjacent said sharpening zone means to facilitate sharpening of a crayon marking instrument positioned therewithin, said arcuate cutting edges being arcuate along the entire length thereof and each of said arcuate cutting edges extending along the entire longitudinal length of its respective support member from said inlet aperture means completely to said base member, said arcuate cutting edge of each of said main sharpening blades including a main parabolic cutting profile extending longitudinally therealong, said main sharpening blades being oriented at approximately 45 degrees with respect to a crayon marking instrument being sharpened within said sharpening zone means, said support members with said main sharpening blades secured fixedly thereto extending longitudinally from said protective ring means in converging relation with respect to one another with the distal ends thereof positioned more closely with respect to one another than said proximate ends thereof, said main sharpening blades including:
(1) a first blade surface;
(2) a second blade surface intersecting with said first blade surface to form said arcuate cutting edge therebetween, said first blade surface and said second blade surface being oriented with respect to one another at an angle of approximately ninety degrees;
F. a plurality of supplementary sharpening blades each being fixedly secured to said base member and extending longitudinally therefrom between each pair of adjacent main sharpening blades to facilitate sharpening of the endmost portion of a crayon marking instrument, each of said supplementary sharpening blades being secured to said base member equally spaced from each of said main sharpening blades positioned thereadjacent, each of said supplementary sharpening blades extending from said base member to an intermediate longitudinal position, each of said supplementary sharpening blades including a supplemental parabolic cutting profile extending longitudinally therealong;
G. a mounting collar fixedly secured to said protective ring means and extending laterally outwardly therefrom in surrounding relation to said support members and said main sharpening blades to further facilitate mounting thereof; and
H. a retaining cup means positioned in surrounding relationship to said support members and said base member and in engagement with respect to said inlet flange means to define a debris retaining chamber therewithin for receiving and retaining sharpening debris therein, said retaining cup means being detachably securable with respect to said inlet flange means to facilitate removal of sharpening debris from said debris retaining chamber defined therewithin.

5,699,621
POSITIONER WITH LONG TRAVEL IN TWO DIMENSIONS
David L. Trumper, Plaistow, and Mark E. Williams, Pelham, both of N.H., assignors to Massachusetts Institute of Technology, Cambridge, Mass.
Filed Feb. 21, 1996, Ser. No. 604,733
Int. Cl.^{6} G01B *7/00;* **B25H** *1/00;* **B23Q** *16/00*
U.S. Cl. 33—1 M **32 Claims**

1. A positioning system for providing precise positioning of a stage in three linear and three rotary dimensions, with long travel in two linear ones of said dimensions comprising:
a first magnetic subassembly for moving the stage to a selected position in a first one of the linear dimensions for which there is long travel, in said three rotary dimensions and for short travel in at least one other linear dimension; and
a second subassembly for moving the first subassembly, including the stage which is mounted to the first subassembly, to a selected position in the second one of the linear dimensions for which there is long travel, drive and bearing elements for

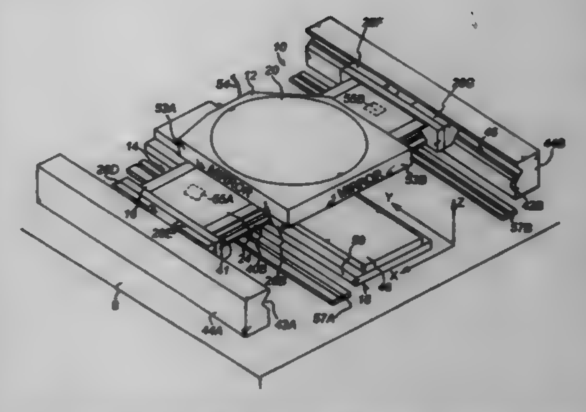

the second subassembly being non-contact elements so that there is substantially no physical contact between elements of the first subassembly and elements of the second subassembly which move relative to each other.

5,699,622
LINE MARKING DEVICE
Gerald G. Umbro, 14 Somers Dr., Rhinebeck, N.Y. 12572
Filed Jul. 12, 1995, Ser. No. 501,481
Int. Cl.^{6} B44D *3/38*
U.S. Cl. 33—414 **17 Claims**

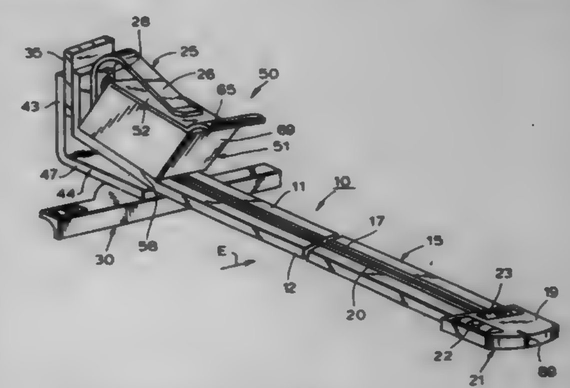

1. A line marking device including:
an elongated main body having a rear surface adapted to face a receiving surface on which said device is to mark at least one line, and a front surface facing away from said rear surface;
a marking filament mounted to said main body with opposite ends of said marking filament being operatively secured to said main body, said marking filament extending lengthwise of said main body between longitudinally spaced first and second locations of said main body located near respective opposite ends of said main body;
a shuttle operatively connected to said marking filament and carrying a supply of a marking substance, said marking filament extending through said shuttle and said supply of marking substance carried by said shuttle;
said shuttle being mounted to travel back and forth between said first and second locations, and during said travel of said shuttle said marking filament picking up some of said marking substance;
said shuttle also being mounted to be movable forward and be snapped rearward relative to said front surface; and
a spring operatively engaging said shuttle to store energy that is supplied to said spring as said shuttle is moved forward;
said marking substance that is picked up by said marking filament being transferred to a receiving surface by moving said shuttle to draw said marking filament forward and then releasing said energy that is stored in said string to snap said shuttle together with said marking filament rearward so that said marking filament engages a receiving surface disposed adja-

cent said rear surface and thereby transfers to such receiving surface some of said marking substance that was picked up by said marking filament to thereby mark a line on a receiving surface engaged by said marking filament.

5,699,623
TAPE MEASURE
Rule Lee, 1F., No. 22, Lane 81, Sec. 2, Tu Hua S. Rd., Taipei, Taiwan
Filed Nov. 21, 1996, Ser. No. 754,319
Int. Cl.^{6} G01B *3/10*
U.S. Cl. 33—758 **5 Claims**

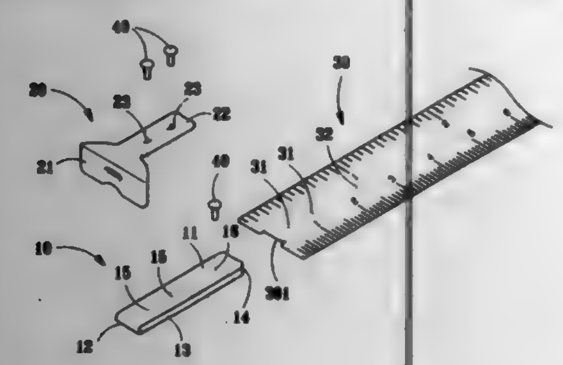

1. An improvement for tape measure comprising:
a metallic tape having a rectangular notch formed at the outer edge;
a U-shaped flexible elongated metal folder for sandwiching the outer end of the metallic tape therebetween with the closed end thereof engaging with the notch and the open end stretching along the longitudinal axis of the tape; and
an end hook disposed above the flexible elongated metal folder with an overlapping portion; wherein the metallic tape, the flexible elongated metal folder and the end hook are riveted together; the flexible elongated metal folder is longer than the end hook, with its extended portion without overlapping with the end hook, wherein the flexible elongated metal folder and the tape are riveted together.

5,699,624
HIGH-TEMPERATURE EXTENSOMETER
Rainer Gaus, Holzkirchen; Stefan Zauner, Hausham, and Günther Gesell, Stephanskirchen, all of Germany, assignors to Industrieanlagen-Betriebsgesellschaft mbH, Ottobrunn, Germany
PCT No. PCT/EP94/01464, § 371 Date Mar. 25, 1996, § 102(e) Date Mar. 25, 1996, PCT Pub. No. WO94/27112, PCT Pub. Date Nov. 24, 1994
PCT Filed May 6, 1994, Ser. No. 545,811
Claims priority, application Germany, May 8, 1993, 43 15 387.9
Int. Cl.^{6} G01B *5/30*
U.S. Cl. 33—787 **7 Claims**

1. Extensometer measurement apparatus to measure thermally or mechanically induced extensions in the range of high temperatures of a test specimen up to about 2300° C., with a preferable working range from room temperature to about 1600° C., and with an application range of pressures from vacuum to about 100 bar, characterized by the combination of the following features:
an inner frame;
two inner blocks respectively spacially mounted in said inner frame separated by a distance l, said two inner blocks each mounted for independent rotation about their respective axes aligned with a reference direction Y in orthogonal directional axes references X, Y, Z;

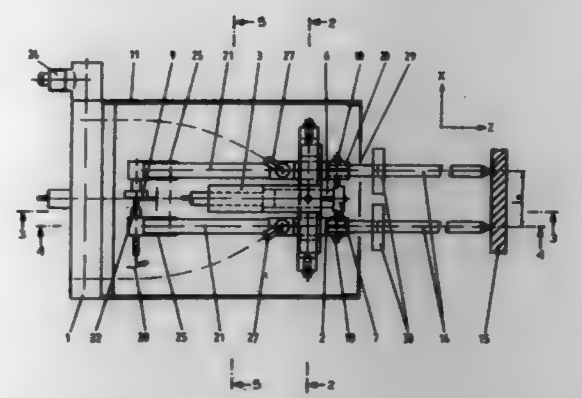

two measurement probes coupled to a sensor for generating measurement signals, each measurement probe respectively mounted in one of said inner blocks;
an outer frame surrounding said inner frame, said inner frame rotatably mounted in said outer frame so as to be rotatable about said orthogonal directional axis reference X;
an outer block, said outer frame rotatably mounted in said outer block so as to be rotatable about said orthogonal directional axis reference Y;
a housing adapted for mounting said outer block therein;
a shaft mounted in said housing, said outer block movably mounted on said shaft for movement along said orthogonal directional axis reference Z; and
means for supplying cooling liquid to said housing for cooling said sensor.

5,699,625
APPARATUS FOR DRAINING LIQUID DROPS FROM TENTERING OVEN
Fumio Iguchi, Ibaraki, Japan, assignor to Oji-Yuka Synthetic Paper Co., Ltd., Tokyo, Japan
Filed Aug. 9, 1996, Ser. No. 699,057
Claims priority, application Japan, Oct. 19, 1995, HEI7-294979
Int. Cl.^{6} F26B *19/00*
U.S. Cl. 34—62 **2 Claims**

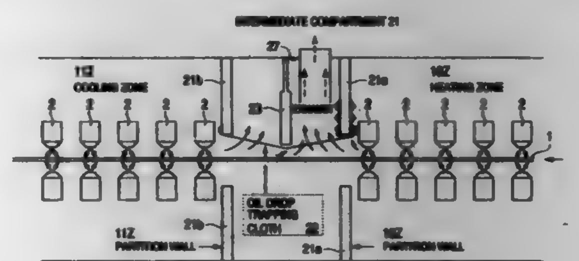

1. An apparatus for draining liquid drops from a tentering oven, the apparatus comprising:
a plurality of plenum ducts for heating and cooling a film and a tenter for stretching the film;
wherein:
said tentering oven has at least two partition walls located between a heating zone and a cooling zone of the tentering oven, said at least two partition walls defining a compartment;
each of the partition walls is located above the tenter and is fitted with a pan and a heater for heating said pan at the lower part thereof; and
a blower is installed above the compartment defined by said at least two partition walls.

5,699,626
CAPILLARY DEWATERING METHOD
Strong C. Chuang, Chadds Ford, Pa.; Kenneth Kaufman, Mount Laurel, N.J., and Robert H. Schiesser, Warrington, Pa., assignors to Kimberly-Clark Worldwide, Inc., Neenah, Wis.
Division of Ser. No. 344,219, Nov. 23, 1994, Pat. No. 5,598,643. This application Sep. 25, 1996, Ser. No. 719,300
Int. Cl.^{6} D21G *5/00*
U.S. Cl. 34—453 **4 Claims**

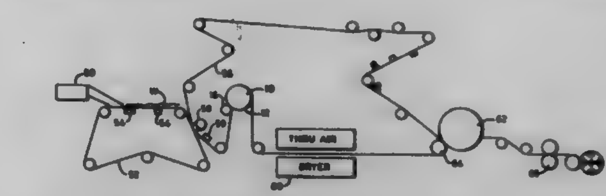

3. A method of retrofitting a conventional paper web manufacturing facility of the type that includes a forming mechanism for forming an embryonic web on a forming mesh and at least one through dryer for drying the embryonic web into a dried paper web, comprising steps of:
(a) removing at least one through dryer;
(b) replacing said removed through dryer with a rotating capillary dewatering roll that has a capillary membrane with capillary pores therethrough which have a substantially straight through, non-tortuous path, the capillary pores having a pore aspect ratio of from about 2 to about 20; and
(c) installing a mechanism for lightly pressing a web to the capillary membrane to ensure hydraulic contact between the water contained in the web and the water in the pores of the capillary membrane without overall compaction of the web.

5,699,627
INTEGRAL SYSTEM FOR THE MANUFACTURE OF CUSHIONED SHOES
Ramon Salcido Castro, Circunvalación No. 101, Dpto. 13, Col. Cd., Granja Zapopan, Jal., Mexico
Filed Nov. 29, 1994, Ser. No. 346,415
Int. Cl.^{6} A43B *7/00;13/18;21/26*
U.S. Cl. 36—28 **21 Claims**

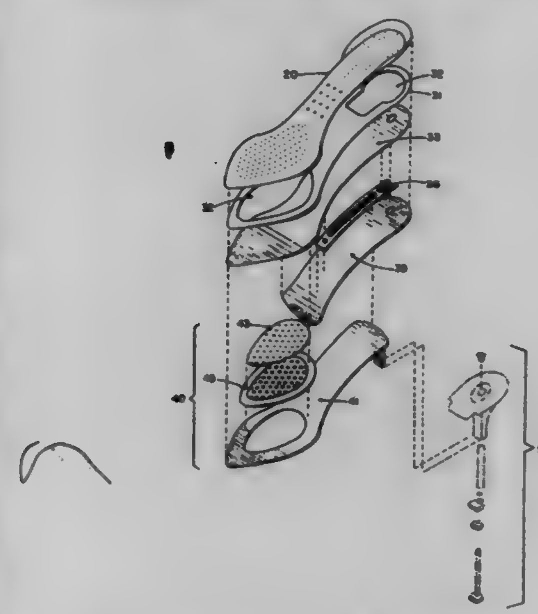

1. An integral system for the manufacture of shoes, comprising:
a) a shoemaker's last conformed anatomically;
b) a padded sole member having ventilation means;
c) an insole assembly for a shoe, which is disposed below said padded sole member with which it is fixed by insertion, said sole assembly comprising: a baricentric oversole with hollow sections predefined in the plantar and tarsal regions, in which hollow sections some lower portions, of complementary design, of said padded sole member are inserted; an intersole placed below said baricentric oversole having flexure lines below the area where the foot bends to make a step; an interior band metatarsal disposed below said intersole to provide rigidity and structure to the metatarsal arch and bridge of the wearer; and a reinforcing web under the band to reinforce the elements comprising said sole assembly;
d) an antiskid damping sole disposed below said sole assembly, said damping sole comprising a sole element with a hollow section, an elastometric element with multiple holes, and a piece having an antiskid lower surface and an upper surface on which a plurality of elements upwardly extend to engage with said holes in the elastomeric element; said piece configured for insertion into the hollow section of the sole element and
e) a heel having means for dampening in the heel zone the impact of the step when walking.

5,699,628
FOOTWEAR SYSTEM FOR USE IN DRIVING
Cyrus D. Bostwalla, New Canaan, Conn., assignor to H.H. Brown Shoe Company, Inc., Greenwich, Conn.
Filed Dec. 17, 1996, Ser. No. 767,816
Int. Cl.^{6} A43C *15/00*
U.S. Cl. 36—59 C **6 Claims**

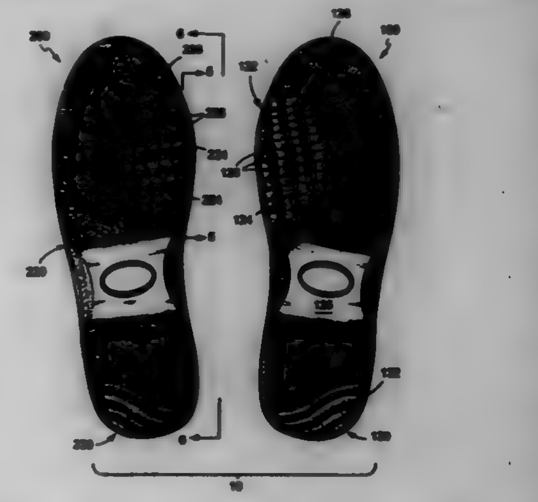

1. A footwear system for use in driving a vehicle, comprising:
a first boot or shoe and a second boot or shoe, each including a sole and an upper, said sole and upper together defining a volume for receiving a foot of a wearer,
each said sole comprising:
a toe region at a distal end of the sole; and
a heel region at a proximal end of the sole with a first plurality of rounded ridges disposed adjacent to one another and extending substantially across a width of the sole;
the sole of said first boot or shoe comprising a first metatarsal region disposed substantially between toe and heel regions and along an inner side of the sole, said first metatarsal region comprising a second plurality of rounded ridges disposed adjacent to one another and extending substantially along a length of the sole; and
the sole of said second boot or shoe comprising a second metatarsal region disposed substantially between toe and heel regions and along an inner side of the sole, said second metatarsal region including a third plurality of rounded ridges disposed adjacent to one another and extending substantially across a width of the sole.

5,699,629
ADJUSTABLE FOOTWEAR
Dorothy G. Munschy, 1512 Locust Ravine, Bakersfield, Calif. 93306
Filed Aug. 8, 1996, Ser. No. 698,975
Int. Cl.⁶ A43B *11/00;3/26*
U.S. Cl. 36—97 **7 Claims**

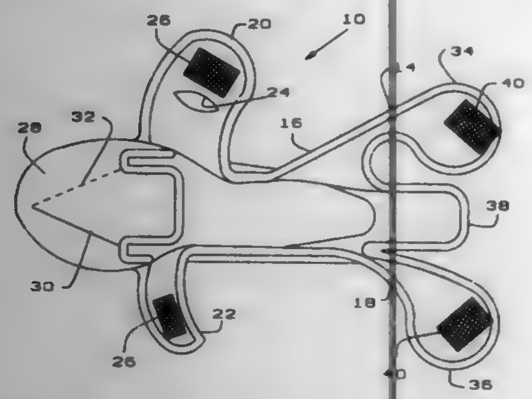

1. An adjustable shoe comprising:
an upper formed with a sole portion,
a toe portion located adjacent the forward end of said sole portion formed with a pair of overlapping flaps said flaps overlapping each other extendable over the toes of a foot for covering the toes of said foot,
side portions having flaps extendable to overlie said foot and said toe portion carrying releasable fastening means for attaching said flaps to each other,
together with a rear flap projecting rearwardly from said sole and foldable upward to define the rear end of the shoe and
a pair of rear side flaps projecting from said side portions which can be overlapped behind said rear flap and which carry means for releasably attaching said rear side flaps together to retain said rear flap.

5,699,630
SNOWSHOE WITH FRONT AND REAR CLEATS
Perry A. Klebahn, and James D. Klingbeil, both of San Francisco, Calif., assignors to Atlas Snow-Shoe Company, San Francisco, Calif.
Continuation of Ser. No. 91,973, Jul. 15, 1993, Pat. No. 5,440,827, which is a continuation of Ser. No. 748,425, Aug. 22, 1991, Pat. No. 5,253,437. This application Aug. 14, 1995, Ser. No. 514,781
Int. Cl.⁶ A43B *5/04*
U.S. Cl. 36—124 **6 Claims**

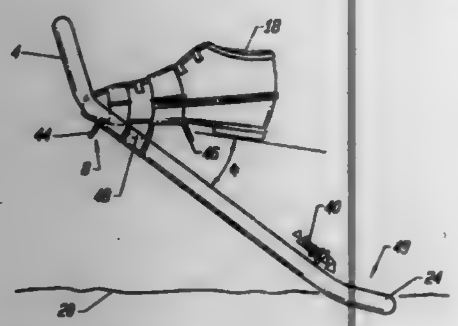

1. A snowshoe, comprising:
a snowshoe frame having front and back ends,
a membrane covering at least a part of said frame so as to form with the frame a snow-engaging snowshoe body,
a front claw including terrain gripping means extending generally downwardly,
boot securing means for securing the front claw of the snowshoe to a user's shoe or boot such that a front portion of the user's foot is positioned over the front claw and is generally fixed relative to the front claw,
resilient strap means secured to the snowshoe frame and to the front claw for connecting the front claw to the snowshoe frame while permitting pivoting motion of the front claw about a horizontal axis relative to the frame when the user's foot is tilted forward with the snowshoe attached, said resilient strap means comprising at least one resilient strap and including preloading means for biasing the front claw angularly relative to the snowshoe body, about a horizontal tilt axis, such that the front claw is biased toward an angularly offset unloaded position, obliquely angled relative to the snowshoe body, at which the rear of the snowshoe frame tilts downwardly relative to the front claw and to the user's foot such that the preloading means urges the back end of the snowshoe frame to pivot down and away from the user's shoe or boot.

5,699,631
ROTATABLE MAGNETIC MEMORY REMINDER DEVICE
Rogue Tyson, P.O. Box 8, Royal Oak, Mich. 48068-0008
Continuation of Ser. No. 440,744, May 15, 1995, abandoned. This application Aug. 19, 1996, Ser. No. 699,078
Int. Cl.⁶ G09F *7/04*
U.S. Cl. 40—621 **17 Claims**

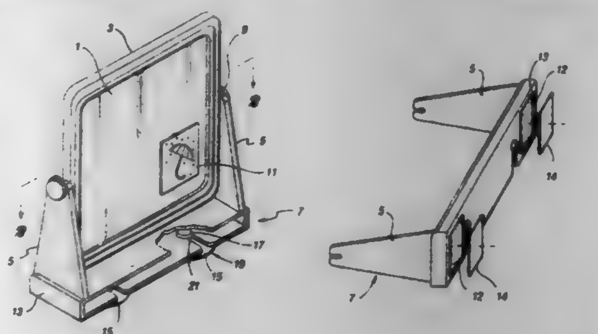

1. A rotatable magnetic memory reminder device, comprising:
a) a substantially planar ferromagnetic plate having a periphery;
b) a decorative frame surrounding at least a portion of the periphery of said ferromagnetic plate, said at least a portion of the periphery including minimally two portions located on opposed edges of said ferromagnetic plate;
c) rotatable mounting means positioned on portions of said decorative frame located on opposed edges of said ferromagnetic plate;
d) a generally U-shaped stand, said stand having a flat base portion and two extending arm portions, said flat base portion comprising a hollow rectilinear shape having substantially parallel top and bottom members orthogonal to said extending arm portions, a plurality of side members connecting said top and bottom members, one side of said rectilinear shape having no side member such that a hollow space defined by said top and bottom members and said plurality of side members is exposed, said bottom member adapted to receive a primary stand mounting means comprising at least one rubber suction cup, the bottom member optionally further adapted to receive on its surface most remote from said extended arm portions, a secondary stand mounting means;
e) rotatable mounting coacting means located proximate an end of each of said extending arm portions of said stand, said rotatable mounting coacting means coacting with said rotatable mounting means to provide full rotational capability of said ferromagnetic plate relative to said stand;
f) stand mounting means, said stand mounting means located proximate said base portion of said stand, said stand mounting means selected from the group consisting of a primary stand mounting means and a secondary stand mounting means; and
g) a plurality of magnetic plaques, each bearing an icon.

5,699,632
INSULATED FISHING MITT FOR COOPERATING WITH ROD HANDLE
Luke A. Stout, and Jennifer L. Stout, both of N10769 Berg Rd., Phillips, Wis. 54555
Filed Jan. 25, 1996, Ser. No. 591,275
Int. Cl.⁶ A01K *97/00;* **A41D** *13/10*
U.S. Cl. 43—25 **9 Claims**

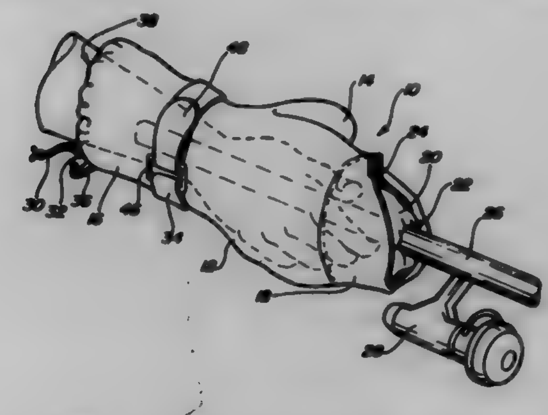

1. A mitt to be worn on the hand of a fisher for use in combination with a fishing rod, said mitt comprising:
a shell having a size and shape to encircle the hand of a fisher, the shell including a thumb portion and a main body portion configured such that the mitt has a front side for covering a palm side of the hand and a back side for covering a back side of the hand;
a first opening provided at one end of the shell through which a fisher may dispose a hand within the shell;
a second opening provided at a second end substantially opposite the first end, said second opening adapted to receive a fishing rod handle extending therethrough so that the hand of the fisher may grip the rod in direct contact; and
a cover provided at said second end of the shell and having fastener means disposed thereon for opening the cover as to allow access to the second opening and for closing the cover so as to cover the second opening, wherein the cover includes a first flap and a second flap fastenable together by the fastener means on the back side of the mitt so that the first flap overlays the second opening when the cover is closed.

5,699,633

Patent Not Issued For This Number

5,699,634
CHRISTMAS TREE WATERER
Lowell O. Erdahl, 1773 Eldridge Ave. W., Roseville, Minn. 55113-5688
Filed Mar. 11, 1996, Ser. No. 613,471
Int. Cl.⁶ A47G *7/02;33/12*
U.S. Cl. 47—40.5 **16 Claims**

1. A waterer for automatically adding water to a basin to replace water drawn from the basin by a water consuming object, which comprises:
(a) a bottle for holding a supply of water, the bottle having a neck at one end;
(b) a water outlet provided on the neck of the bottle; and

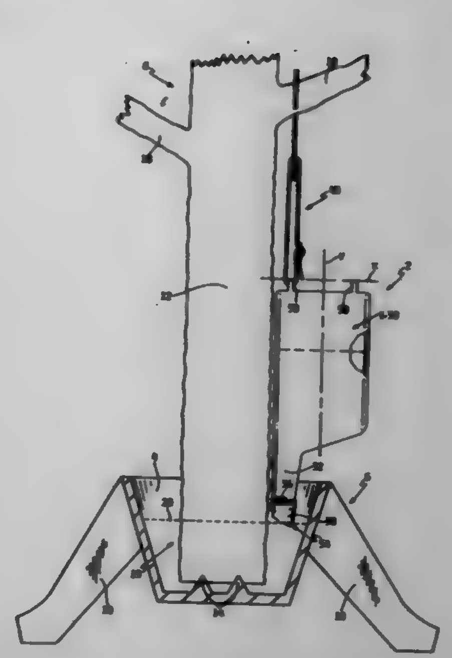

(c) means located on an end of the bottle opposite to the neck for suspending the bottle from above the basin in an inverted position with the neck of the bottle extending down into and being received inside the basin such that the water outlet on the neck of the bottle is beneath a top edge of the basin, wherein the suspension means has an extendible length to allow the suspension means to engage supporting objects located at different heights from the basin.

5,699,635
METHOD AND APPARATUS FOR FEEDING A LIQUID MATERIAL TO A TREE
Masao Nitta, 1-20, Kadotayashiki 3-chome, Okayamashi-shi, Okayama, Japan, assignor to Ikari Corporation, Tokyo, and Masao Nitta, Okayamashi, both of Japan
Filed May 28, 1996, Ser. No. 664,022
Claims priority, application Japan, May 26, 1995, 7-152544
Int. Cl.⁶ A01G *29/00*
U.S. Cl. 47—57.5 **11 Claims**

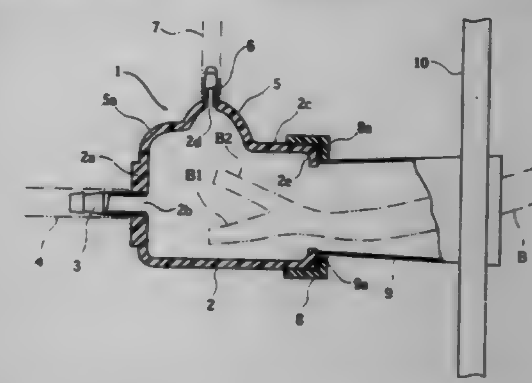

1. A method for feeding a liquid material to a tree by using a liquid feeding apparatus which has a container body, the tree having a branching portion with bifurcated offshoots, the method comprising the steps of:
cutting the bifurcated offshoots in a manner such that they partially remain with the branching portion;
attaching the liquid feeding apparatus to the branching portion in a manner such that the remaining bifurcated offshoots are inserted into the container body; and
supplying the liquid material into the container body from a liquid storage tank while expelling air from the container body.

5,699,636
EXTRUDED WINDOW JAMB LINER WITH YIELDABLE SEALING MEANS
Ivan L. Stark, Ada, Mich., assignor to Newell Manufacturing Company, Lowell, Mich.
Continuation-in-part of Ser. No. 352,536, Dec. 9, 1994, Pat. No. 5,526,608. This application Nov. 1, 1995, Ser. No. 548,312
Int. Cl.[6] E05D *13/00*
U.S. Cl. 49—419 **14 Claims**

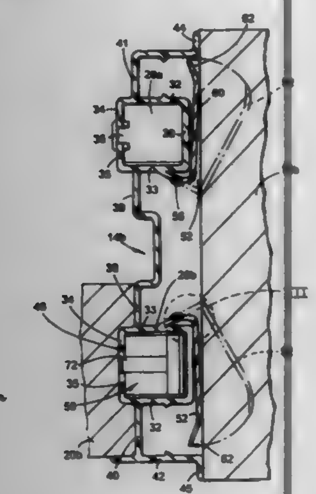

1. A jamb liner for a window assembly of a type including a frame and a sash operably mounted in the frame, comprising;
a sash-engaging portion defining a channel for guiding movement of the sash in the frame; and
an air-sealing portion for positioning the jamb liner relative to said frame and for preventing flow of air therebetween, said air-sealing portion being connected to said sash-engaging portion and including a root wall section extending at an angle greater than zero degrees from said sash-engaging portion, a frame-engaging wall section, and a resilient wall section comprised of an elastomeric material extending in line between and connecting said root wall section to said frame-engaging wall section such that said frame-engaging wall section effectively forms a continuous wall with said root wall section and is disposed at a non-acute angle with respect thereto, said resilient wall section having at least portions whose thickness is generally greater than that of said root wall section and said frame-engaging wall section, said resilient wall section flexibly bending upon angular movement of said frame-engaging wall section with respect to said root wall to resiliently bias said frame-engaging wall section with respect to said sash-engaging portion to enhance sealing of said frame-engaging wall section against the frame to prevent undesirable flow of air between said jamb liner and the frame, and said resilient wall section portions of greater thickness augmenting such resilient bias effect during said bending.

5,699,637
ARCH FRAME
Norbert Marocco, Woodbridge, Canada, assignor to Shade-O-Matic Limited, North York, Canada
Filed Aug. 22, 1996, Ser. No. 701,505
Int. Cl.[6] E06B *3/30*
U.S. Cl. 52—204.53 **9 Claims**

1. A composite arch frame comprising:
a plurality of elongated thermoplastic bar members, each bar member defining a pre-determined width, and a pre-determined thickness which is less than its width, and each bar member being made up of outer walls, and intermediate spacer walls extending between said outer walls at intervals, and defining there between generally elongated passageways:

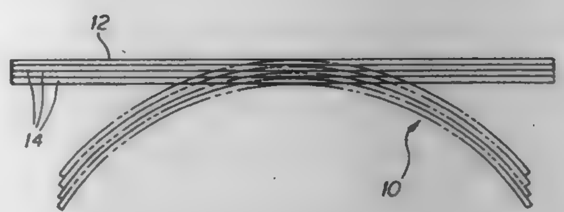

interlock formations formed on the exterior of some of said outer walls of at least some of said bar members, interlock recesses formed on some other of said walls whereby adjacent bar members are interlocked together, said interlock formations and recesses defining continuous slide members, permitting one said bar member to slide relative to said adjacent bar members.

5,699,638
STUCCO ARCH CASING BEAD
Gary Joseph Maylon, Trussville, Ala., assignor to Alabama Metal Industires Corporation, Birmingham, Ala.
Filed Aug. 26, 1996, Ser. No. 703,013
Int. Cl.[6] E04B *1/00*
U.S. Cl. 52—86 **19 Claims**

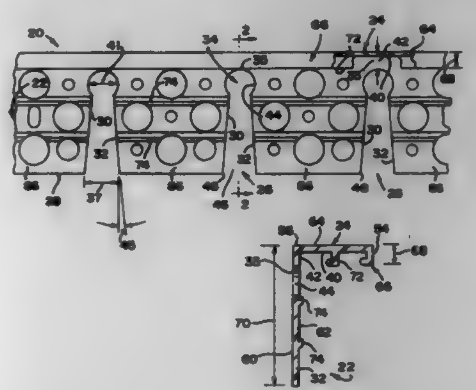

1. A casing bead article for use in plaster construction, said casing bead being a generally elongated strip of material, said casing bead article comprising:
a mounting flange having an abutting surface for contacting an underlying structure and a material surface for receiving a plaster construction material thereagainst;
a ground flange attached to and extending away from said mounting flange, said ground flange having an internal surface juxtaposed to said material surface and an external surface opposite said internal surface;
a free edge of said mounting flange spaced from said ground flange; and
said mounting flange having a series of notches extending from said free edge towards said ground flange, each of said notches having a pair of elongated edges extending from said free edge towards said ground flange, and an arcuate portion of said notch being positioned between said elongated edges and said ground flange, said arcuate portion defining an arcuate edge connecting said pair of elongated edges;
said elongated edges are spaced apart defining a notch gap therebetween; and
said elongated edges being disposed at an angle relative to one another and tapering outwardly from said arcuate portion to said free edge of said mounting flange.

5,699,639
ADJUSTABI E ANCHORAGE FOR TRUSSES
Roger Fernandez, 1010 E. 10 Ave., Hialeah, Fla. 33010
Filed Dec. 14, 1995, Ser. No. 537,041
Int. Cl.[6] E04B *1/41*
U.S. Cl. 52—707 **5 Claims**

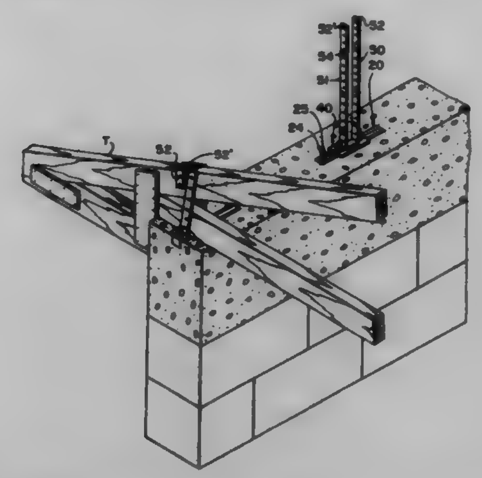

1. An anchorage device for keeping a truss in place with respect to a poured concrete body, comprising:
a) elongated housing means including a longitudinal slot;
b) anchorage means mounted to said elongated housing means; and
c) means for fastening said truss to said elongated housing means and said means for fastening said truss being slidably mounted to said elongated housing means along said slot including plate means having at least one fastening member for rigidly keeping said plate means at a predetermined position along said slot, and further including strap means for securing said truss mounted on said plate means.

5,699,640
FOAM BUILDING BLOCK
Kenneth W. Bourgeois; Thomas R. Morris; Joseph R. Morris, and John F. Morris, all of Melbourne, Fla., assignors to Southeast Walls, Inc., Melbourne, Fla.
Filed Mar. 26, 1996, Ser. No. 622,121
Int. Cl.[6] E04C *1/00*
U.S. Cl. 52—309.4 **22 Claims**

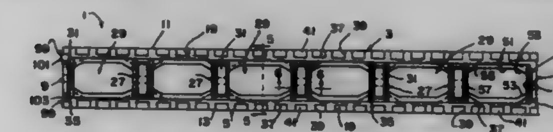

1. A building block apparatus comprising a pair of generally parallel side walls, the side walls having upper edges, lower edges, outer surfaces and inner surfaces, a pair of end walls extending between ends of the side walls, the end walls having top edges, bottom edges, interior surfaces and exterior surfaces, multiple transverse members connected to and extending between the inner surfaces of the side walls, wherein the transverse members have tops, bottoms and a pair of cavity-defining sides, stacking elements positioned along the upper edges and the lower edges of the side walls and along the top edges and the bottom edges of the end walls, and connectors positioned on the end walls, wherein the transverse members are spaced between the side walls, thereby dividing the block into multiple cavities, wherein the transverse members are generally parallel to the end walls and are generally perpendicular to the side walls, wherein the transverse members further comprise main body portions, pairs of arms extending from the main body portions and U-shaped cutout portions defined by the arms, with outer edges of the main body portions and the arms joining the inner surfaces of the side walls of the block, and wherein the end walls further comprise main parts, pairs of standing members extending from the main parts and generally U-shaped open regions defined by the standing members, wherein the pairs of arms are generally vertical and wherein the side surfaces of the main body portions have inwardly sloping upper regions and outwardly sloping lower regions.

5,699,641
SUSPENSION CEILING WITH INTEGRATED OPENINGS
William J. Tinen, Glenview, Ill.; Pawan Singal, North Olmsted; Douglas Hooper, Lakewood, both of Ohio, and Alan C. Wendt, Barrington, Ill., assignors to USG Interiors, Inc., Chicago, Ill.
Filed Feb. 23, 1996, Ser. No. 606,290
Int. Cl.[6] F04B *5/52;* **E04C** *2/42*
U.S. Cl. 52—506.07 **18 Claims**

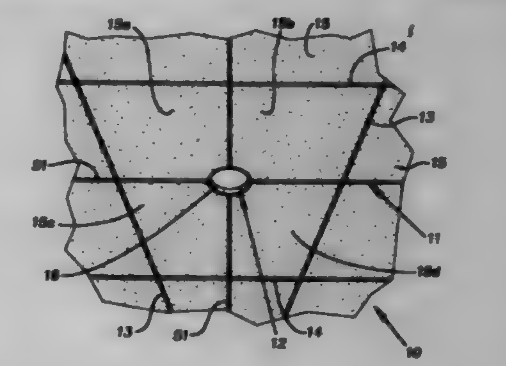

1. A planar suspended ceiling grid comprising a first pair of spaced parallel primary unitary runners extending in a first direction in a horizontal plane, a second pair of spaced parallel primary unitary runners extending in a second direction in said horizontal plane perpendicular to the first direction between the first pair of runners and being connected thereto, the spacing between the first pair of primary runners and the spacing between the second pair of primary runners being such that the first and second pair of primary runners form a rectangular module pattern, a circular ring in the geometric center of the rectangular module in said horizontal plane and including a cylindrical wall and a circular flange at a lower visible face extending radially outwardly from the cylindrical wall, a set of four secondary runners in said horizontal plane, each of said secondary runners being attached at one end to the exterior of the cylindrical wall of the ring and at an opposite end to a center of a respective length of one of said primary runners forming the rectangular module, the secondary runners being perpendicular to the primary runners to which they are connected, the ring being vertically supported by the secondary runners through their mutual interconnections, the interconnections being arranged such that said one end of each of the runners adjacent the ring overlie and are concealed by the flange when viewed from below.

5,699,642
PLASTIC REBAR HARNESS
Charles Joseph McDevitt, Jr., 5345 S. Macadam St., Tucson, Ariz. 85746
Filed Jun. 5, 1996, Ser. No. 658,722
Int. Cl.[6] E04C *5/16*
U.S. Cl. 52—719 **1 Claim**

1. The combination of a harness system and steel reinforcement bars comprising:
two steel reinforcement bars oriented at a desired angle with respect to each other;
two interconnected flexible harnesses each with a one direction clasp at one end and a free end at the other end;
each of said harnesses having a strap section between its free end and clasp, each of said harness's straps and free ends

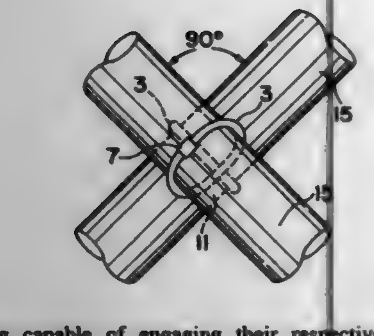

being capable of engaging their respective one direction clasps to form a closed looped configuration around each of said steel reinforcement bars; and

a common moisture proof spacer element for interconnecting together and orienting each of said harnesses between their free ends and clasps;

said spacer being located between said two steel reinforcement bars and oriented at a desired angle to space the bars apart and hold them in the desired angular orientation when said harnesses are looped around the bars with their free ends extending through the one direction claps and pulled to tighten the harnesses around the bars; and

wherein said steel reinforcement bars are oriented at approximately right angles with respect to each other and held at this orientation by the spacer and tightened harnesses.

5,699,643
FLOOR SUPPORT FOR EXPANSIVE SOILS
George Kinard, 10350 W. 65th Ave., Arvada, Colo. 80004
Filed Feb. 27, 1996, Ser. No. 610,755
Int. Cl.⁶ E02D *5/00*
U.S. Cl. 52—742.14 **24 Claims**

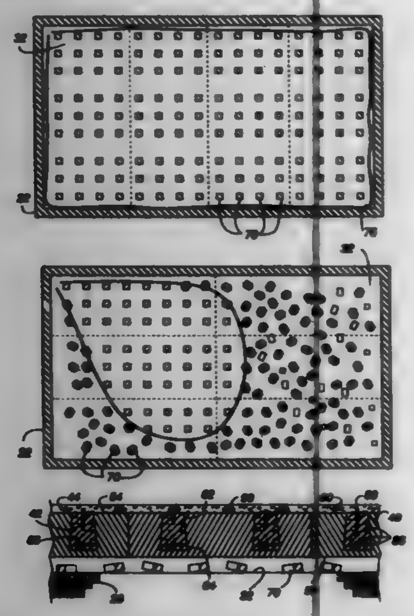

1. A method of supporting a floor above an area of soil bounded by foundation walls, said method comprising:

supporting elongated foam blocks above the soil between the foundation walls, each said foam block having supports attached to a bottom surface of the foam blocks to support the foam blocks a predetermined distance above the soil, and each said foam block further defining at least one elongated channel formed from a top surface of the foam block;

positioning the foam blocks and the elongated channels of the foam blocks to define joist channels extending between opposing foundation walls and suspended above the soil;

pouring concrete into each joist channel;

allowing the concrete within the joist channels to harden into rigid concrete joists supported above the soil by the opposing foundation walls; and

supporting the floor from and above the joists.

5,699,644
PREFABRICATED BUILDING PANEL
Rodney I. Smith, Rte. 2, Box 7, Midland, Va. 22728
Continuation of Ser. No. 490,517, Jun. 14, 1995, abandoned, which is a continuation of Ser. No. 509,216, May 8, 1990, abandoned, which is a continuation-in-part of Ser. No. 434,327, Nov. 13, 1989, abandoned, which is a continuation-in-part of Ser. No. 210,322, Jun. 23, 1988, abandoned. This application Oct. 17, 1996, Ser. No. 733,337
Int. Cl.^{6} E04C *2/38;2/288*
U.S. Cl. 52—801.1 **5 Claims**

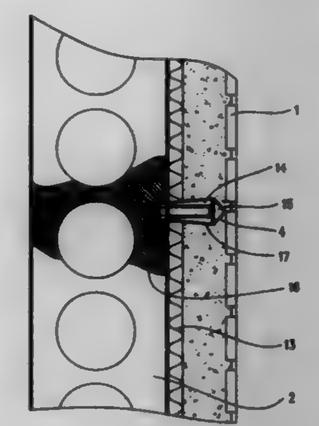

1. A prefabricated, construction panel comprising a slab having permanently imbedded therein a plurality of thermally non-conductive spaced lugs for permanently securing said slab to rigid means for structurally reinforcing said panel, said lugs being joined to said reinforcement means and projecting into one surface of said slab to maintain a fixed separation forming a space between said slab and said reinforcement means, and wherein at least a portion of the part of said lugs which project into the slab has an asymmetric configuration comprising a progressively wider taper as it extends into the slab.

5,699,645
MOLDED BIODEGRADABLE PACKAGING
Ronald Vaccarello, Mullica Hill, N.J., assignor to NOREL, Little Ferry, N.J.
Filed Nov. 13, 1996, Ser. No. 747,588
Int. Cl.^{6} B65B *61/00*
U.S. Cl. 53—139.5 **3 Claims**

1. Apparatus for packaging articles within a shipping container, which comprises:

means for holding a quantity of loose nuggets of a biodegradable, shaped material defined at least in part by an exposed starch surface;

conduit means in open communication with the means for holding, at a location wherein the loose nuggets will flow by gravity into the conduit means, said conduit means having a first open end in communication with the means for holding and a distal second end for the discharge of carried nuggets;

valve means on the conduit for controlling flow of the nuggets through the conduit;

moisture applying means located outside the second distal end of the conduit for applying a spray of moisture onto at least a portion of exposed starch surface of said nuggets after said nuggets have left said distal second end and are exposed to air, whereby the surfaces of said nuggets are gelatinized; and

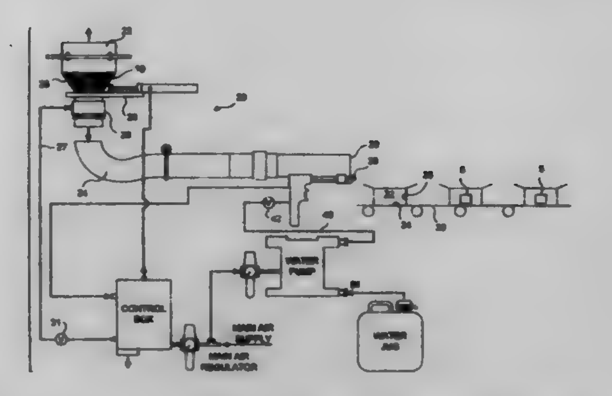

means for supporting a shipping container for receiving said nuggets.

5,699,646
METHOD OF STORING LOGS AND LUMBER CUT THEREFROM
John F. Hammer, Lilburn, Ga., assignor to Cornelia Textiles, Inc., Cornelia, Ga.
Continuation-in-part of Ser. No. 274,298, Jun. 30, 1994, Pat. No. 5,491,958. This application Dec. 18, 1995, Ser. No. 574,399
Int. Cl.^{6} B65B *11/02;67/08*
U.S. Cl. 53—397 **12 Claims**

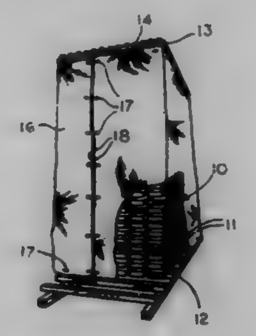

1. A method of inhibiting the staining and discoloring of dried lumber during unsheltered storage in open air comprising the steps of:

(a) overlaying the dried lumber with an air pervious plastic material having a material to air density of between 70% and 90%, and

(b) positioning the material overlaid dried lumber in open air.

5,699,647
COVER FORMING APPARATUS HAVING PIVOTING FORMING MEMBERS
Donald E. Weder; Joseph G. Straeter, both of Highland, Ill., and Franklin J. Craig, Valley Park, Mo., assignors to Southpac Trust International, Inc.
Continuation of Ser. No. 177,839, Jan. 5, 1994, abandoned, which is a continuation of Ser. No. 927,891, Aug. 10, 1992, Pat. No. 5,291,721. This application Nov. 6, 1996, Ser. No. 746,866
Int. Cl.^{6} B65B *11/00*
U.S. Cl. 53—397 **18 Claims**

1. A method for forming a cover about at least a portion of an outer peripheral surface of a flower pot, comprising the steps of:

providing a mobile cover forming apparatus, wherein the mobile cover forming apparatus comprises:

a mobile platform;

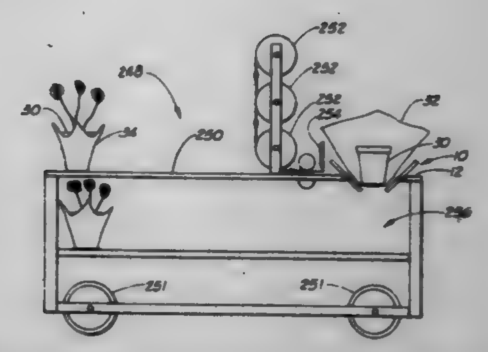

means for selectively moving the mobile platform from one location to another;

a sheet dispenser;

means for supporting the sheet dispenser and the flower pot;

a plurality of adjustable pivotable forming members radially arranged around a common center location at which the flower pot is supported, wherein each pivotable forming member has a pivot point relative to said common center location and each forming member has a forming surface, and

means for pivoting the pivotable forming members, wherein the pivoting means is pivotally attached to the forming members for pivotingly urging the pivotable forming members to a forming member forming position, whereby the pivoting means is connected to the support means;

providing a sheet of material having an upper surface and a lower surface, wherein the sheet of material is operably engaged with the sheet dispenser;

moving the mobile cover forming apparatus to a predetermined location for covering the flower pot;

moving the pivotable forming members so as to engage the sheet of material and thereby form the sheet of material into a cover extending about at least a portion of the outer peripheral surface of the flower pot; and

moving the mobile cover forming apparatus to a subsequent predetermined location.

5,699,648
METHOD FOR A COVERING FLOWER POT AND FLORAL GROUPING
Donald E. Weder, Highland, Ill., assignor to Southpac Trust International, Inc., Oklahoma City, Okla., not individually, but as trustee of The Family Trust U/T/A dated Dec. 8, 1995, Charles A. Codding, Authorized Signatory for Southpac Trust International, Inc., Trustee
Continuation of Ser. No. 183,010, Jan. 14, 1994, Pat. No. 5,479,758, which is a continuation of Ser. No. 1,001, Jan. 6, 1993, Pat. No. 5,307,606, which is a continuation-in-part of Ser. No. 968,798, Oct. 30, 1992, Pat. No. 5,369,934. This application Sep. 11, 1995, Ser. No. 526,335
Int. Cl.^{6} B65B *25/02;43/08;5/02;47/00*
U.S. Cl. 53—410 **21 Claims**

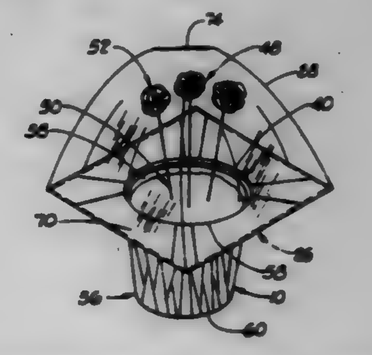

1. A method for providing a covering for use with a pot having a floral grouping disposed therein, the pot having a top and a

bottom and an outer peripheral surface, the floral grouping having a stem end and a bloom end with the floral grouping extending a distance upwardly from the top of the pot terminating with the bloom end, the method comprising the steps of:
providing a sheet of material having an upper surface, a lower surface and an outer peripheral surface, a sheet extension being connected to the sheet of material and extending a distance therefrom;
forming the sheet of material into a pot cover having a top, a bottom and a cover opening extending through the top a distance toward the bottom of the pot cover providing a pot receiving space shaped and adapted to receive the pot, the sheet extension extending a distance from the pot cover;
placing the pot in the pot cover with the floral grouping extending a distance upwardly from the top of the pot cover; and
forming the sheet extension about the floral grouping.

5,699,649
METERING AND PACKAGING DEVICE FOR DRY POWDERS
Andrew L. Abrams, 26 Imperial Ave., Westport, Conn. 06880, and Anand V. Gumaste, 7 Ardsley Ct., Robbinsville, N.J. [illegible]
Filed Jul. 2, 1996, Ser. No. 677,340
Int. Cl.⁶ B65B *1/30*
U.S. Cl. 53—428 **12 Claims**

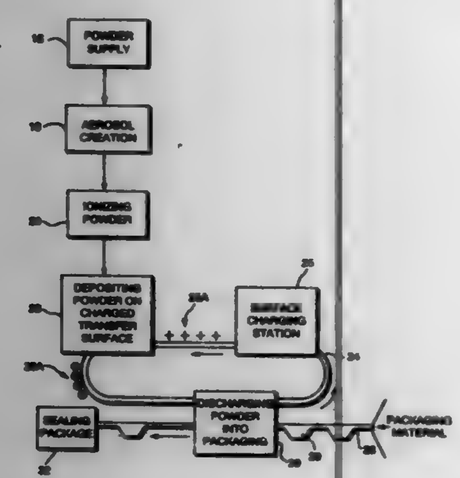

1. The method of packaging powder comprising the steps of developing a predetermined electrostatic charge having a predetermined "image" area on a powder carrier surface, contacting said carrier surface with a sufficient amount of powder to neutralize said charge, moving said powder and said surface to a transfer station, transferring said powder to a package and sealing said package to contain said amount of transferred powder.

5,699,650
DUAL TEMPERATURE HOT WATER SHRINK SYSTEM
Stephen L. Gray, Moore, S.C., assignor to W. R. Grace & Co.-Conn., Duncan, S.C.
Filed Jun. 10, 1996, Ser. No. 661,239
Int. Cl.⁶ B65B *53/02*
U.S. Cl. 53—442 **16 Claims**

1. A process for shrinking a package, the package having a top, end seals, and bottom, which process comprises:
a) heating water until the water reaches a temperature of between 180° F. and 210° F.;
b) applying a first portion of the heated water to the bottom and end seals of the package;

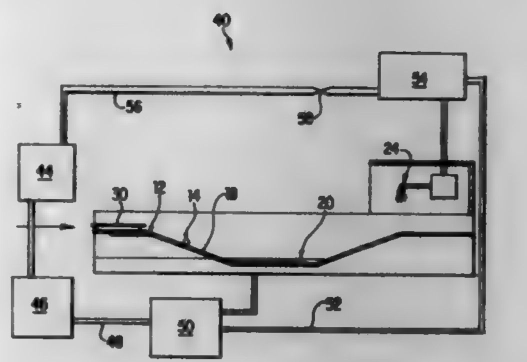

c) mixing a second portion of the heated water with water having a temperature lower than the heated water to provide cooled water; and
d) applying the cooled water to the top of the package.

5,699,651
SELECTOR ASSEMBLY
Derek Miller, Dallas; Thomas Edward Weitkamp, Acworth, and Steve Brown, Canton, all of Ga., assignors to Riverwood International Corporation, Atlanta, Ga.
Filed May 23, 1996, Ser. No. 652,295
Int. Cl.⁶ B65B *35/30*
U.S. Cl. 53—448 **22 Claims**

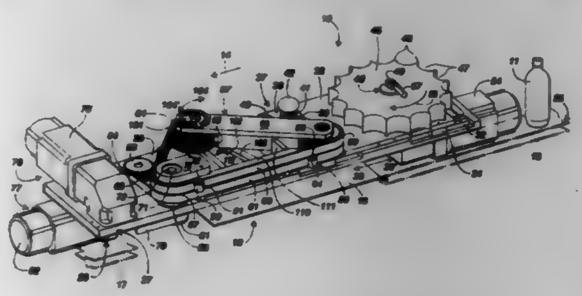

8. A method of dividing a substantially continuous line of products moving in the direction of a path of travel at a first rate of speed along a product infeed line into a group of products of a predetermined group size for loading onto a packaging machine line moving at a second rate of speed, said method comprising the steps of:
advancing the line of products along the path of travel into a selector assembly;
metering each of the products of the line of products and spacing the products with respect to one another in response thereto;
engaging the line of products with at least one lug of a first series of spaced lugs affixed to a first selector belt moving in the direction of the path of travel at the first rate of speed and forming a first group of products in response thereto;
progressively accelerating the first group of products with the first selector belt from the first rate of speed to a speed approximately equivalent to the second rate of speed of the packaging machine line; and
transferring the first group of products to the packaging machine line.

5,699,652
ARTICLE PACKAGING SYSTEM
Frank Craig, Valley Park, Mo.; Joseph G. Straeter, and Donald E. Weder, both of Highland, Ill., assignors to Southpac Trust International, Inc., Oklahoma City, Okla.
Continuation of Ser. No. 417,477, Apr. 5, 1995, Pat. No. 5,586,425, which is a continuation of Ser. No. 954,635, Sep. 30, 1992, abandoned. This application Oct. 10, 1996, Ser. No. 728,883
Int. Cl.⁶ B65B *11/58*
U.S. Cl. 53—449 **8 Claims**

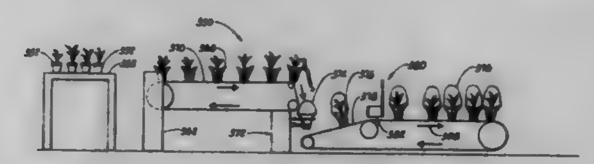

1. A method of packaging a potted plant comprising the steps of:
providing a sleeving station having automatic sleeving means for automatically applying a preformed sleeve;
automatically opening the preformed sleeve and disposing a decorative cover into the opened preformed sleeve;
providing a plurality of potted plants, each having an exterior surface;
sequentially conveying each potted plant to the sleeving station via conveying means having a distal end near the sleeving station; and
sequentially delivering each potted plant to guiding means arranged at the distal end of the conveying means through which guiding means each potted plant is automatically passed downwardly and then automatically oriented and maintained in an upright orientation for placement into an opened sleeve and placing each such uprightly oriented potted plant into the opened sleeve and into the cover therein forming a sleeved covered potted plant.

5,699,653
POUCH MACHINE FOR MAKING MAXIMUM VOLUME POUCH
Donn A. Hartman, Gurnee, and Charles E. Cloud, Northbrook, both of Ill., assignors to Cloud Corporation, Des Plaines, Ill.
Filed Nov. 6, 1995, Ser. No. 553,840
Int. Cl.⁶ B65B *9/08;43/36*
U.S. Cl. 53—455 **34 Claims**

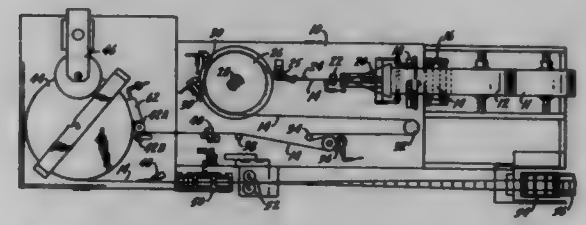

25. In a pouch machine of the type which forms a series of pouches in a web of pouch material, the pouches being defined by front and back panels joined by side seals and a closed bottom, the tops of the pouches prior to filling being open to define a mouth, an improved method of filling the pouches comprising the steps of:
forming a lip in the top edge of one panel by folding a portion of said top edge down such that said panel has a smaller height than the other panel;
directing compressed air at the mouths of the pouches to separate the front and back panels, thereby opening the pouches for filling;
filling the pouches with a product;
removing the lip by folding it back up to its original position; and
sealing the top edges of the pouches.

5,699,654
CAPPING APPARATUS
Richard Henry van den Akker; Nigel Baverstock, and Roy Thomas Gibbs, all of Dorset, Great Britain, assignors to Carnaudmetalbox (Holdings) USA Inc., Wilmington, Del.
Filed Feb. 28, 1996, Ser. No. 610,153
Claims priority, application United Kingdom, Mar. 9, 1995, 9504778
Int. Cl.⁶ B65B *51/10*
U.S. Cl. 53—478 **18 Claims**

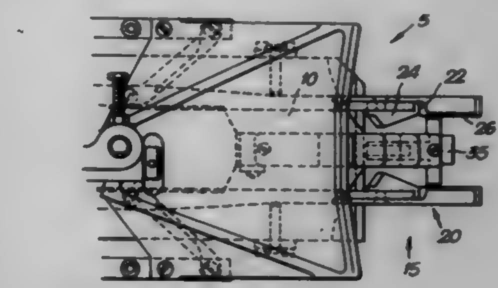

1. A method of applying a cap to a container, the cap having a tamper evident ring connected to a hem at the base of the cap, the method comprising:
softening the tamper evident ring by warming the ring;
delivering the cap to the outlet of a cap chute;
supporting the hem of the cap on guide means extending from the outlet of the cap chute whilst enabling the ring to extend within the guide means;
holding the cap against the guide means; and
controlling delivery of the cap to the container by maintaining the cap substantially in alignment with the chute and guide means until collection from the guide means by the container.

5,699,655
FOOD MATERIAL TRANSFERRING APPARATUS
Kiminasa Kuboyama; Shoji Yokoyama; Yoshinori Miyakoshi; Hiroya Taniguchi, all of Tokyo; Kazuhiro Tsuruta, and Hisashi Goto, both of Mie, all of Japan, assignors to Fuji Electric Co., Ltd., Kawasaki, Japan
Filed Dec. 1, 1995, Ser. No. 566,178
Claims priority, application Japan, Dec. 5, 1994, 6-300471; Jan. 11, 1995, 7-002359; Jun. 15, 1995, 7-148573
Int. Cl.⁶ B65B *35/50*
U.S. Cl. 53—540 **15 Claims**

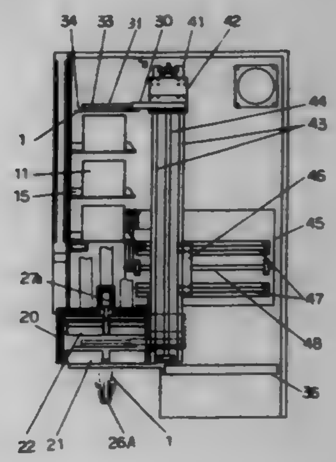

11. A food material transferring apparatus for transferring soft food materials, comprising:
at least one tray for vertically storing soft food materials,
a heating device for heating the food material when the food material is inserted thereinto,

a pushing member situated above the heating device and being movable in a vertical direction, said pushing member being moved downwardly after the food material is heated in the heating device so that the food material in the heating device is folded and pushed out from the heating device,
an arm having a hand formed at one side of the arm, said hand having absorption pads for vacuum-absorbing the food material,
a moving mechanism movable in vertical and lateral directions, said moving mechanism being situated adjacent to the tray and the heating device and fixed at the other side of the arm, said moving mechanism being moved so that the hand takes the food material in the tray and transfers the food material into the heating device,
means for providing a wrapping material disposed under the heating device,
a horizontal receiving table situated under the means for providing the wrapping material,
a movable member attached at an upper end to the receiving table and being movable in a vertical direction between upper and lower limits,
actuating means attached to a lower end of the movable member for urging the movable member upwardly, and
lock means for locking the movable member at the lower limit, said pushing member, when actuated, pushing the food material in the heating device, laminating the food material with the wrapping material for folding into a V-shape along a guide, and placing the folded food material with the wrapping material on the receiving table.

5,699,656
AGRICULTURAL COMBINE

Kenji Hamada; Toshinori Kirihata; Keito Kamikubo, all of Osaka; Mikio Takagi, Okayama; Masami Nakamura; Youzaburo Narahara, both of Osaka, and Koichi Kawasaki, Okayama, all of Japan, assignors to Yanmar Agricultural Equipment Co., Ltd., Japan

Division of Ser. No. 299,621, Sep. 2, 1994, Pat. No. 5,584,167.
This application Oct. 1, 1996, Ser. No. 722,579
Claims priority, application Japan, Sep. 9, 1993, 5-224810; Sep. 9, 1993, 5-243968; Dec. 8, 1993, 5-340899
Int. Cl.[6] A01D *41/00;* **A01F** *12/00*
U.S. Cl. 56—11.1 **12 Claims**

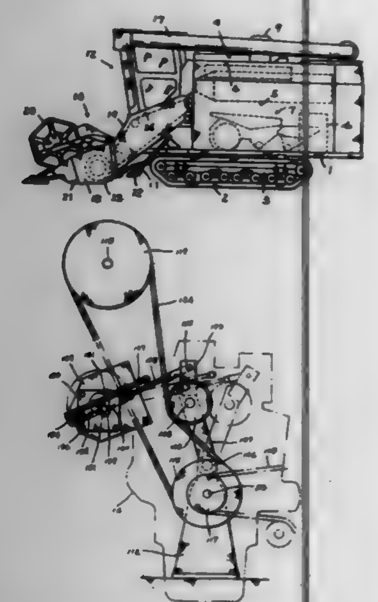

4. An agricultural combine, comprising:
a power source;
a left and a right propulsion track;
a power transmission control for controlling energy transfer from said power source to each of said left and right propulsion tracks;
a shaft supported in a housing mounted in said working vehicle;
a lever for rotating said shaft;
a left and a right slider, each designed to slide on said shaft along said shaft's axial line;
a left and a right speed and direction changing means linked respectively to said left and right sliders for controlling the speed and direction of said crawler assemblies, characterized in that said shaft and said left and right sliders are moved as one body by said lever whereby said left and right speed and direction changing means are moved at the same time;
a main slider on said shaft within said housing;
a rotatable steering control member;
means for moving said main slider in response to rotation of said steering control member for moving said left and right sliders so they affect said left and right speed and direction changing means differently in response to rotation of said shaft for controlling the relative speed and direction of said left and right crawler assemblies independently for turning said working vehicle;
an hydraulic power transmission for each of said left and right propulsion tracks characterized in that movement of said power transmission control results in an equal change in motion for each of said left and right propulsion tracks;
a belt for transmitting the driving force of said power source to a working section;
a tension roller on a pivoted support arm for pressing on said belt midway between said power source and said working section;
a clutch motor for moving said pivoted support arm to move said tension roller into and out of engagement with said belt; and
a mechanical linkage between said clutch motor and said pivoted support arm for causing the movement of said pivoted support arm in response to said clutch motor to be fast until said tension roller touches said belt and said movement becoming gradually slower after said tension roller touches said belt.

5,699,657
BRAIDED LINE SPLICES AND METHODS OF SPLICING TO FORM SAME

William Thomas Paulson, 1073 Long Beach Dr., Big Pine Key, Fla. 33043

Filed May 23, 1996, Ser. No. 652,818
Int. Cl.[6] D01H *17/00*
U.S. Cl. 57—22 **20 Claims**

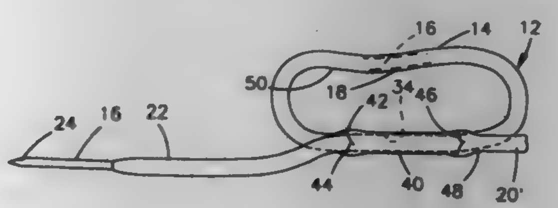

1. In a length of braided line, a closed-loop splice formed in said line by portions of said line, said braided line having a braided sheath and a core within said sheath, said core having an end portion at one end of said length of braided line and said sheath having a linearly extending inverted section spaced from said core end portion along said length of braided line with a plurality of openings formed through said sheath and opening into said inverted section of said sheath in lengthwise spaced relation along said length of braided line, said length of braided line also extending linearly beyond said sheath inverted section and forming another portion of said length of braided line which is selectively

subjected to tension forces lengthwise thereof with such forces being exerted lengthwise through said sheath inverted section when occurring;
said core having said end portion thereof extending into a first one of said openings and through said sheath inverted section out of a second one of said openings so that a portion of said length of braided line between said core end portion and said sheath inverted section forms a closed loop, said sheath inverted section gripping said core end portion received therein.

5,699,658
POT SPINNING MACHINE

Karl Koltze, Mönchengladbach; Hans-Jürgen Heinrich, Röhrsdorf; Volker Roland, Weissbach, and Peter Voidel, Chemnitz, all of Germany, assignors to W. Schlafhorst AG & Co., Monchen-Gladbach, Germany

Filed Jun. 3, 1996, Ser. No. 657,367
Claims priority, application Germany, Jun. 1, 1995, 195 20 153.1; Jun. 30, 1995, 195 23 937.7
Int. Cl.[6] D01H *1/08*
U.S. Cl. 57—76 **10 Claims**

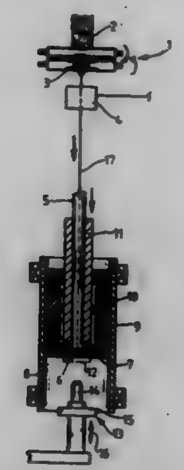

1. A pot spinning machine, comprising a spinning pot for rotation during spinning and rewinding, a tubular yarn guide associated with the spinning pot disposed for receiving from a drafting arrangement the fiber material to be spun and having a mouth operable to deliver spun yarn into the spinning pot to form a yarn cake therein, a rewinding tube movable between a reserve position during spinning at the mouth of the yarn guide and a rewinding position spaced from the yarn guide for winding onto the rewinding tube the yarn cake after the conclusion of the spinning operation, a yarn sensor for detecting a yarn break along the transport path of the yarn, and means connected to and automatically responsive to a signal produced by the yarn sensor for shifting the rewinding tube from its reserve position into its rewinding position.

5,699,659
PROCESS FOR PRODUCING SUBSTANTIALLY ALL-POLYESTER YARNS FROM FINE DENIER FEED FIBERS ON AN OPEN END SPINNING MACHINE

Tony F. Caviness, Laurinburg, N.C., assignor to Waverly Mills, Inc., Laurinburg, N.C.

Filed Mar. 8, 1996, Ser. No. 614,780
Int. Cl.[6] D02G *3/02*
U.S. Cl. 57—245 **4 Claims**

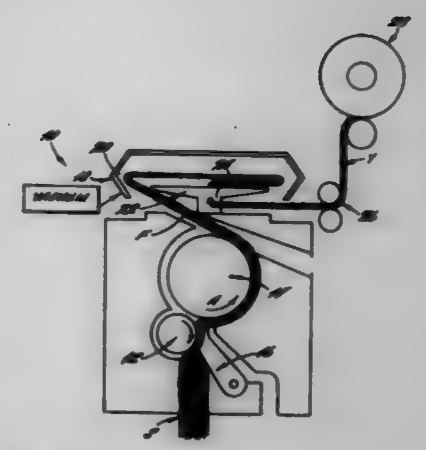

1. An open end spun yarn having an Ne count as measured on the indirect system of about 12 or coarser consisting essentially of polyester fibers about 1.3 denier per filament or less in size and having a single fiber tenacity of about 5 grams per denier or greater.

5,699,660
STRANDING STATION FOR REVERSE LAY OR SZ TYPE STRANDING MACHINE

Bruno Buluschek, Echandens, Switzerland, assignor to E. Kertscher S.A., Yvonand, Switzerland

Filed Jul. 19, 1996, Ser. No. 683,437
Claims priority, application France, Jul. 26, 1995, 95 09089
Int. Cl.[6] D07B *3/00;7/04*
U.S. Cl. 57—293 **15 Claims**

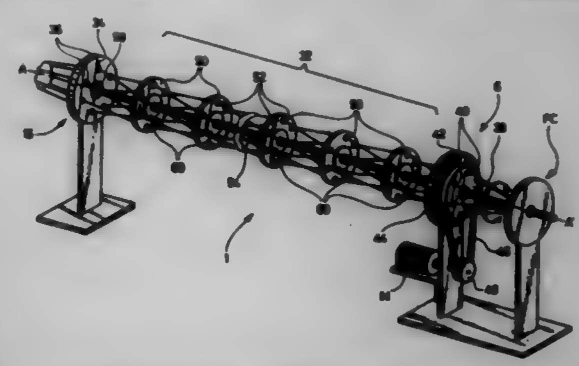

1. A stranding station for stranding machines of the SZ type intended to join or assemble helically a plurality of individual wire strands, said stranding station comprising:
a plurality of fixed guide means for guiding the wire strands,
stranding means comprising a stranding element which is able to rotate about an axis,
accumulation means, disposed between said guide means and said stranding means, for feeding said wire strands, and comprising at least one accumulation element,
said wire strands passing through each of said guide means, said stranding means and said accumulation means,
a support shaft having an axis extending between the guide means and the stranding means, said support shaft carrying said accumulation means,
means for alternately driving said stranding element in rotation in opposite directions,
means for driving said accumulation element in rotation simultaneously with said stranding element,
wherein said support shaft is driven in rotation in conjunction with said stranding element,
wherein said accumulation element is mounted so that it is free to rotate about said support shaft and free to move along the axis of said support shaft,
wherein the rotation driving means of the accumulation element comprises an intermediate element attached to the support

shaft, and disposed downstream of the accumulation element in relation to the forward motion direction of the wire strands,
wherein the intermediate element comprises a driving surface, and
wherein the accumulation element may be applied against said driving surface and thus be driven in rotation by friction of said driving surface against the accumulation element.

5,699,661
SPINNING APPARATUS AND METHOD FOR PRODUCING A FALSE TWISTED SPURN YARN
Hiroshige Maruki, Kusatsu, Japan, assignor to Murata Kikai Kabushiki Kaisha, Kyoto, Japan
Filed Jul. 13, 1995, Ser. No. 502,319
Claims priority, application Japan, Jul. 15, 1994, 6-186780
Int. Cl.⁶ D01H *5/00; 5/28*
U.S. Cl. 57—328 **2 Claims**

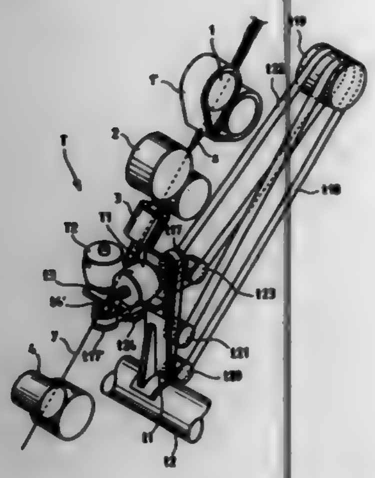

1. A spinning apparatus of a draft device for drafting fiber aggregate, comprising:
a front roller of a draft device for drafting fiber aggregate;
a spinning nozzle for generating air current rotating in a direction reverse to a false twisting direction by a pair of false twisting units and having an upstream side disposed immediately adjacent to said front roller and aligned for receiving a fiber aggregate from said front roller and a downstream side for discharging said fiber aggregate and disposed downstream and immediately adjacent to said front roller;
said pair of false twist units having a central portion, each of said false twist units including a hollow roller of flexible elastic material and disposed on said downstream side of said spinning nozzle, said central portion of said hollow roller being expanded and forms a barrel shape.

5,699,662
INFRARED SUPPRESSION EXHAUST DUCT SYSTEM FOR A TURBOPROP PROPULSION SYSTEM FOR AN AIRCRAFT
Gary A. Born; Thomas A. Roberts, both of Riverside, and Peter M. Boer, Ontario, all of Calif., assignors to Lockheed Martin Corporation, Palmdale, Calif.
Filed May 28, 1996, Ser. No. 654,362
Int. Cl.⁶ F02K *1/00*
U.S. Cl. 60—39.5 **4 Claims**

1. An exhaust duct system for an aircraft, the aircraft having at least one turboprop propulsion system mounted on the wing within a nacelle, the propulsion system having a circular shaped exhaust port generally aligned with the longitudinal axis of the aircraft, system comprising:

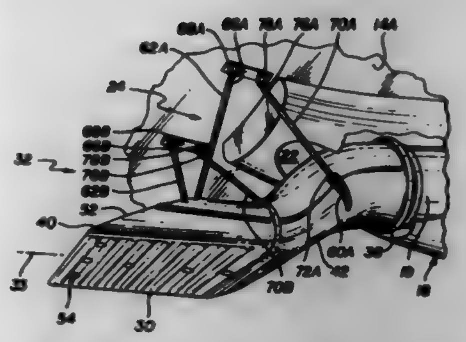

a generally shallow S shaped duct having a longitudinal axis aligned with the longitudinal axis of the exhaust port, a circular shaped inlet section, and a rectangular exhaust port section and a transition section therebetween; with the inlet having a larger diameter than the exhaust port of the propulsion system and positioned there about, said inlet portion having means to provide flexible engagement with an external surface of the exhaust port,
a first pair of struts having first ends pivotally connected at a central position of the rectangular exhaust port section, said first pair of struts extending upward and outward from the longitudinal axis of the duct and having second ends pivotally connected to the underside of the wing; and
a second pair of struts having first ends pivotally connected to the sides of said transition section, said second pair of struts extending upward and rearwards from the inlet and slightly outward and having second ends pivotally coupled to the underside of the wing.

5,699,663
METHOD OF PREVENTING INSTABILITIES PRODUCED BY COMBUSTION IN A TURBOJET ENGINE
Jean-Yves Capelle, Montlhery; Michel André Albert Desaulty, Vert Saint Denis, and Eric Charles Louis Le Letty, Le Mee Sur Seine, all of France, assignors to Societe Nationale d'Etude et de Construction de Moteurs d'Aviation "SNECMA", Paris, France
Filed Mar. 27, 1996, Ser. No. 622,279
Claims priority, application France, Mar. 29, 1995, 95 03664
Int. Cl.⁶ B63H *11/00*
U.S. Cl. 60—204 **7 Claims**

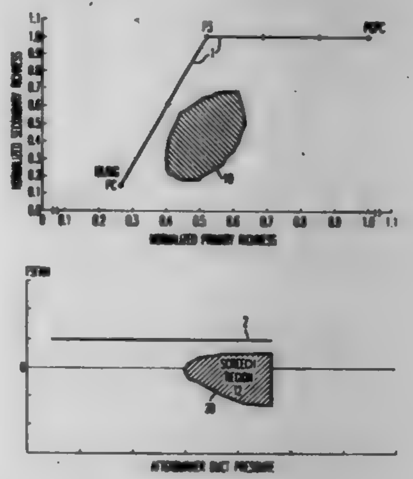

1. A method of preventing instabilities due to combustion in a turbojet engine having a primary flow and secondary flow, and an afterburner into which an air-fuel mixture is injected in proportions measured in terms of primary richness and secondary richness from each of said flows and of overall richness, said method comprising the steps of:

detecting experimentally vibration zones created during afterburn as a function of the operating conditions of said engine and as a function of an afterburn operating region, said vibration zones comprising a first zone of operation located between a minimum recorded value of idling of post-combustion and a maximum recorded value of post-combustion at full throttle and a second zone of operation located at full throttle post-combustion; and
selecting operating points of post combustion for regulating the fuel richness from each of said primary and secondary flows to enable the detected vibration zones to be avoided wherein first and second groups of operating points for regulation of fuel richness mixtures for each flow are selected, said first group of operating points being an operating area of post-combustion located between idling and full throttle, and said second group of operating points being a functioning area of post-combustion located at full throttle.

5,699,664
SHUT-OFF VALVE UNIT FOR A CIRCUIT FOR INJECTING AIR IN THE EXHAUST SYSTEM OF AN INTERNAL COMBUSTION ENGINE
Bernard LaFleur, Volvic, France, assignor to SAGEM SA, Paris, France
Filed Nov. 15, 1995, Ser. No. 559,387
Claims priority, application France, Nov. 17, 1994, 94 13757
Int. Cl.⁶ F01N *3/10*
U.S. Cl. 60—307 **10 Claims**

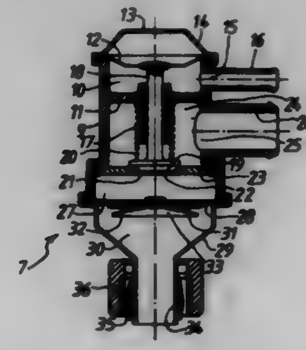

1. A shut-off valve unit for an air injection circuit in an exhaust system of an internal combustion engine, the shut-off valve unit comprising;
a casing having a first chamber, a second chamber and a third chamber;
a membrane delimiting the first chamber in said casing;
means for admitting air into said first chamber from an air pump;
means for admitting air into said second chamber from said air pump;
means for evacuating air from said third chamber towards an exhaust manifold of said engine;
a valve including a valve rod controlled by said membrane to allow communication between said second chamber and said third chamber when said air pump is in operation;
wherein said means for admitting air into said first chamber includes a passage between said first and second chambers; and
wherein said passage is formed in said valve rod.

5,699,665
CONTROL SYSTEM WITH INDUCED LOAD ISOLATION AND RELIEF
Gregory T. Coolidge, Fort Wayne, Ind., assignor to Commercial Intertech Corp., Youngstown, Ohio
Filed Apr. 10, 1996, Ser. No. 630,493
Int. Cl.⁶ F16D *31/02*
U.S. Cl. 60—426 **20 Claims**

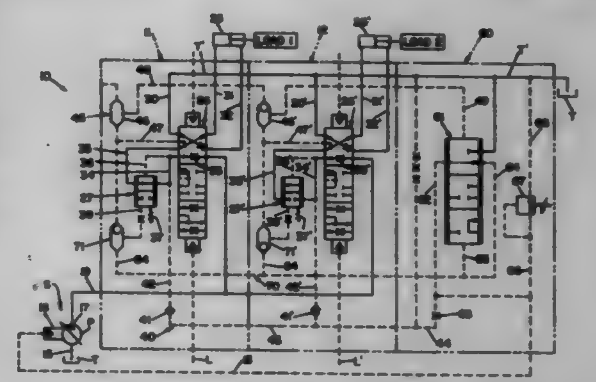

1. A pressure-responsive hydraulic control system comprising, a plurality of work sections, a load-sensing flow-compensated source which creates a margin pressure connected by a parallel flow inlet conduit to said work sections and having a source return line, a hydraulic motor in each of said work sections operatively connected to a load, a direction control valve in each of said work sections connected to said inlet conduit and to said hydraulic motor, metering notches in said direction control valves controlling the flow of fluid from said source to said hydraulic motor, a pressure compensator valve in each of said work sections inputting flow-metered fluid from said metering notches and outputting flow-regulated fluid to said hydraulic motor, said pressure compensator valves having flow-metered pressure acting on one end thereof and a spring and a compensator control signal operating on the other end thereof, a flow-regulated logic check system interconnecting each of said work sections and providing a flow-regulated maximum output signal, a flow-metered logic check system interconnecting each of said work sections and providing a flow-metered maximum output signal, and an isolation circuit having an isolation valve and a relief valve and receiving said flow-regulated maximum output signal and said flow-metered maximum output signal and supplying a load signal to said source return line and supplying an isolation outlet signal to an induced load check system which also receives a flow-regulated fluid signal from each of said work sections and supplying as said compensator control signal to each of said work sections the highest pressure signal of said isolation outlet signal and the flow-regulated fluid signal for said work section, whereby said pressure compensating valves and said relief valve are isolated from induced loads introduced in said flow-regulated maximum output signal by said load on said hydraulic motor of at least one of said work sections.

5,699,666
STEAM GENERATING POWER STATION, PROCESS FOR OPERATING THE SAME, AND INTERLINKING NETWORK AND PROCESS FOR ITS OPERATION.
Heribert Kürten, Uttenreuth; Uwe Radtke, Rossenberg; Wolfgang Taube, Seevetal, and Horst Vollmer, Herzogenaurach-Haundorf, all of Germany, assignors to Siemens Aktiengesellschaft, Munich, Germany
Division of Ser. No. 247,351, May 23, 1994, Pat. No. 5,507,145. This application Jan. 11, 1996, Ser. No. 583,769
Claims priority, application Germany, Nov. 21, 1991, 41 38 264.1
Int. Cl.⁶ F01K *13/02*
U.S. Cl. 60—652 **1 Claim**

1. In combination, an interlocking electrical network, a steam generating power plant connected to the interlocking electrical

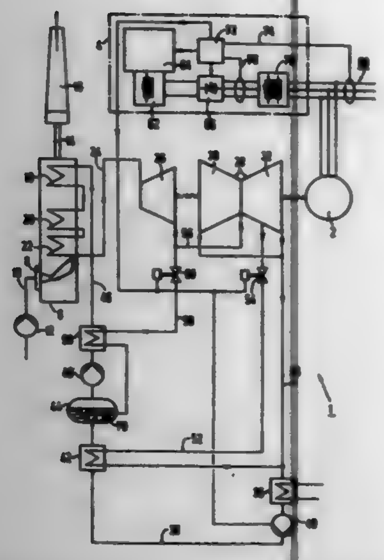

network, and a system for superconducting magnetic energy accumulation disposed independently of and remotely from said power plant at a junction of said electrical network, comprising:

- a steam turbine in said steam generating power plant;
- a steam bleeder line connected to said steam turbine; and
- a control unit for furnishing electrical power into the electrical network directly from said superconducting magnetic accumulator to level a power deficit lasting on the order of several seconds, and simultaneously, said control unit increasing steam available to said steam turbine.

5,699,667
GAS-OPERATED PREMIXING BURNER FOR GAS TURBINE
Franz Joos, Weilheim, Germany, assignor to Asea Brown Boveri AG, Baden, Switzerland
Filed Dec. 14, 1995, Ser. No. 572,567
Claims priority, application Germany, Dec. 28, 1994, 44 46 945.4
Int. Cl.[6] F23R *3/30*
U.S. Cl. 60—737 **4 Claims**

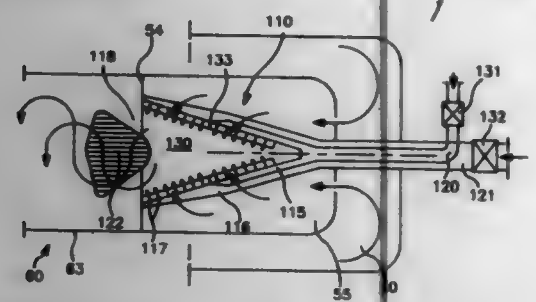

1. A gas-operated, flame-stabilizing premixing burner for a combustion chamber of a gas turbine, comprising:

- a burner wall having two, oppositely located, longitudinally extending openings for tangentially directed flows of combustion air into a premixing space defined by the burner wall;
- a plurality of nozzles lined up in the longitudinal direction of the premixing space adjacent to the openings to inject fuel to intensively mix with the combustion air prior to ignition, wherein the nozzles are subdivided into a first group proximal an inner end of the burner space and a second group proximal an outlet end of the burner space; and
- first and second separate fuel feed lines to provide fuel respectively to the first and second groups, wherein the burner is operable at partial load with only the first group of nozzles, and wherein at full load the first group and second group inject fuel for a substantially uniform fuel concentration across the burner outlet.

5,699,668
MULTIPLE ELECTROSTATIC GAS PHASE HEAT PUMP AND METHOD
Isaiah Watas Cox, Eli, Israel, assignor to Borealis Technical Limited, London, England
Filed Mar. 30, 1995, Ser. No. 422,076
Int. Cl.[6] F25B *21/00*
U.S. Cl. 62—3.1 **48 Claims**

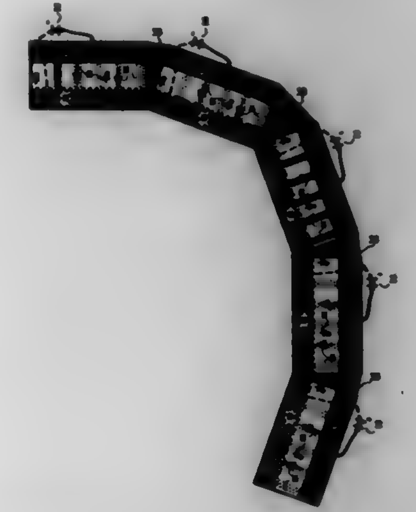

1. A heat transference system comprising a plurality of electrostatically pumped heat transference devices wherein said devices each comprise

- a) an evaporator electrode
- b) a condenser electrode
- c) a direct current power supply connects to said electrodes by suitable wiring means
- d) separation means whereby said electrodes are held apart
- e) a working fluid whereby heat may be absorbed at said evaporator electrode, said heat being released at said condenser electrode, said condenser electrode being at a higher or lower temperature than said evaporator electrode,

the improvement wherein being that said devices are arranged so as to enable said fluid to move from one said device to another by action of gravity.

5,699,669
AIR-CIRCULATING BASE FOR BOTTLED WATER COOLING AND DISPENSING APPARATUS
Albert W. Gebhard, 2101 E. Alameda Ave., Denver, Colo. 80209
Filed Jul. 15, 1996, Ser. No. 680,373
Int. Cl.[6] F25B *21/02*
U.S. Cl. 62—3.64 **18 Claims**

1. In water cooling and dispensing apparatus having an insulated chilling tank, and an air circulating fan unit beneath said chilling tank, the improvement comprising:

an air-circulating base mounted beneath said apparatus having upper and lower generally circular mounting plates, a plurality of vertically extending fins arranged at circumferentially spaced intervals between said mounting plates, means connecting said mounting plates to said fins with said mounting plates disposed in horizontal, spaced parallel relation to one another and with passageways formed between said fins in communication with openings in said upper mounting plates, first and second dividing walls interposed between said plates in diametrically opposed relation to one another and separating said passageways into diametrically opposed inlet ports through which outside air can be drawn upwardly into said apparatus and diametrically opposed outlet ports displaced 90 degrees from said inlet ports through which air can be expelled from said apparatus.

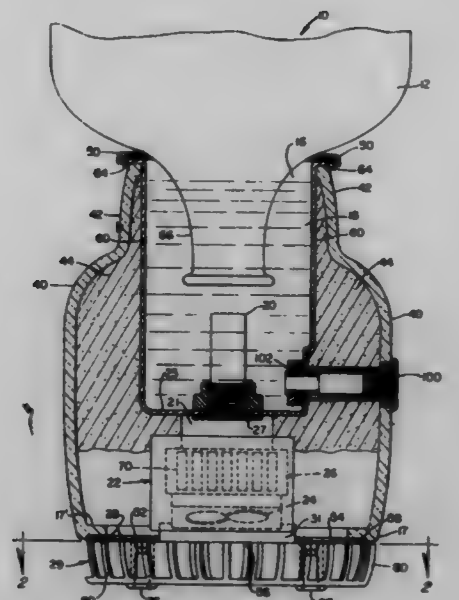

5,699,670
CONTROL SYSTEM FOR A CRYOGENIC REFRIGERATION SYSTEM
Romuald Martin Jurewicz, St. Louis Park, and Herman H. Viegas, Bloomington, both of Minn., assignors to Thermo King Corporation, Minneapolis, Minn.
Filed Nov. 7, 1996, Ser. No. 745,902
Int. Cl.[6] F17C *9/04*
U.S. Cl. 62—50.3 **20 Claims**

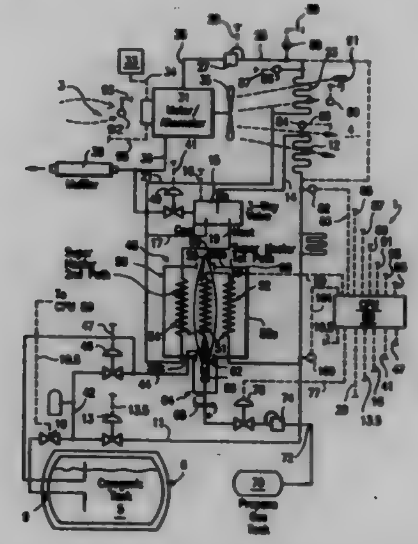

13. A control system for a cryogenic refrigeration system of a type having an evaporator-heater coil, an electronically controlled valve for regulating an amount of cryogenic gas to said evaporator-heater coil, a vapor motor driven by said cryogenic gas coupled to both an alternator for recharging a battery, and a fan for generating an air flow through said coil and into a conditioned space, comprising:

- a temperature sensing means for generating an electrical signal indicative of the temperature of said conditioned space, and
- a microprocessor means having an input electrically connected to said temperature sensing means and the electrical output of said alternator and an output electrically connected to said electronically controlled valve for both converting a rectified output of said alternator into shaft rpms of said fan and modulating the flow of cryogenic gas through said coil and said motor via said electronically controlled valve to achieve a selected set point temperature in said conditioned space.

5,699,671
DOWNFLOW SHELL AND TUBE REBOILER-CONDENSER HEAT EXCHANGER FOR CRYOGENIC RECTIFICATION
Michael James Lockett, Grand Island, and Vijayaraghavan Srinivasan, Williamsville, both of N.Y., assignors to Praxair Technology, Inc., Danbury, Conn.
Filed Jan. 17, 1996, Ser. No. 584,938
Int. Cl.[6] F25D *13/06*
U.S. Cl. 62—63 **14 Claims**

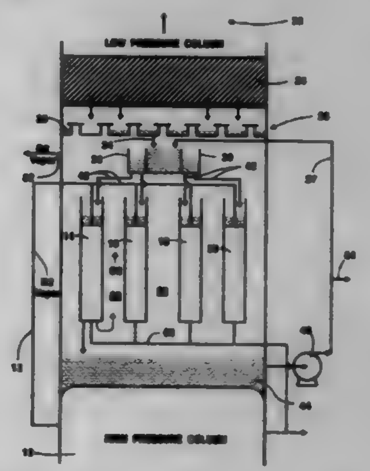

1. A downflow shell and tube condenser comprising:

- a shell having an upper tube sheet and a lower tube sheet, said shell extending above said upper tube sheet to create a first reservoir;
- means for introducing a cold liquid into said first reservoir;
- a plurality of heat transfer tubes extending between said upper tube sheet and said lower tube sheet, each heat transfer tube having one end which extends through said upper tube sheet and into said first reservoir and further having an aperture positioned above said upper tube sheet;
- means for introducing a vapor, which is less cold than said cold liquid into said shell and about said heat transfer tubes, whereby said cold liquid entering said heat transfer tubes via each said aperture and flowing down therethrough causes a condensation of said vapor within said shell to a liquid, said cold liquid, in turn, being at least partially converted to a vapor; and
- means for recovering said liquid.

5,699,672
REFRIGERATION METHOD AND APPARATUS
Hans Foerster, Beimsstrasse 59, D-39110 Magdeburg, and Wolfgang Leser, Jesteburg, both of Germany, assignors to Hans Foerster, Magdeburg, Germany
Filed Mar. 11, 1996, Ser. No. 612,809
Claims priority, application Germany, Mar. 7, 1995, 195 07 920.5
Int. Cl.[6] F25B *9/00*
U.S. Cl. 62—86 **20 Claims**

1. A method of refrigeration, comprising the steps of:

providing air as coolant and as primary refrigerant;

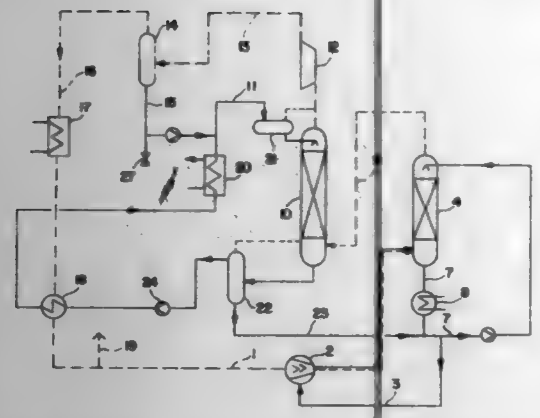

feeding said air to compressor means for substantially isothermal compression;
feeding said compressed air for cooling by direct heat exchange with primary and secondary refrigerants to first and second scrubber column means operated, respectively, by first and second refrigerant circuit means;
feeding said compressed cooled air to turbine means for adiabatic substantially isentropic expansion;
recovering residual coldness from said expanded air by heat exchange means; and
preheating the air fed to said compressor means in said heat exchange means.

5,699,673

COMPRESSED DRY AIR SUPPLY SYSTEM

Tatsuyuki Hoshino; Takashi Ban; Takahisa Ban, and Tatsuya Hirose, all of Kariya, Japan, assignors to Kabushiki Kaisha Toyoda Jidoshokki Seisakusho, Kariya, Japan

Continuation of Ser. No. 362,657, Dec. 22, 1994, abandoned. This application Jun. 10, 1996, Ser. No. 660,724

Claims priority, application Japan, Dec. 24, 1993, 5-328703

Int. Cl.^{6} F04C *29/04;* **F04B** *39/06*

U.S. Cl. 62—93 **8 Claims**

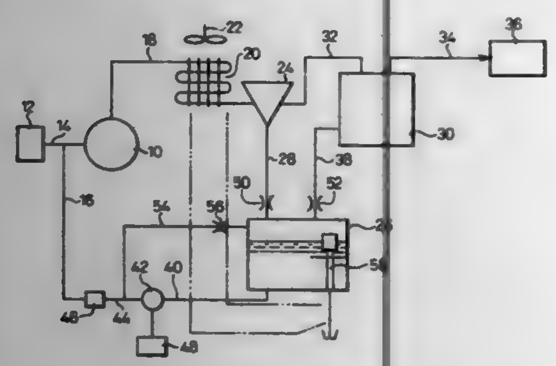

1. A compressed dry air supply system comprising:
an air compressor using water for lubricating and cooling movable parts thereof;
a radiator for partially cooling the compressed air obtained from said air compressor;
a water separator for removing water drops from the compressed air obtained from said radiator;
a refrigerator type dryer for dehumidifying the compressed air obtained from said water separator;
a water tank for receiving the water removed from the compressed air by said water separator and the water produced by the dehumidification of the compressed air by said refrigerator type dryer; and
a recycling means for returning at least part of the water held in said water tank to said air compressor.

5,699,674

METHOD FOR CONTROLLING TEMPERATURE IN A CHAMBER OF A FOOD STORAGE APPARATUS

Young-Gil Lee, Asan, and Beom-Geol Ryu, Pyongtaek, both of Rep. of Korea, assignors to Mando Machinery Corp., Kyongki-Do, Rep. of Korea

Filed Apr. 16, 1996, Ser. No. 632,988

Claims priority, application Rep. of Korea, May 10, 1995, 95-11347

Int. Cl.^{6} F25B *1/00*

U.S. Cl. 62—115 **10 Claims**

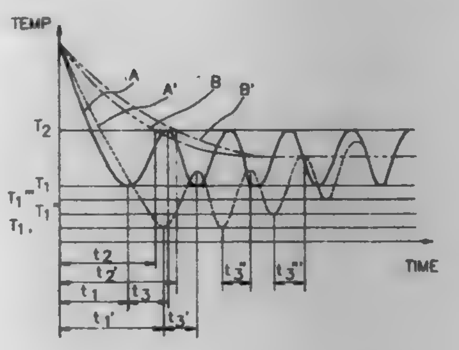

1. A method for controlling temperature in a chamber of a food storage apparatus having a cooling device, the method comprising the steps of:
(a) inputting a lower and an upper temperature limit T1 and T2, a predetermined elapsed time t1 for the temperature of the chamber storing a normal amount of food to reach the lower temperature limit T1 after the cooling device has been initially activated, a predetermined temperature restoring time t3 needed for the temperature of the chamber storing the normal amount of food to be increased by a difference ΔT between the lower and the upper temperature limits T1 and T2 from an initial deactivation of the cooling device, a plurality of compensating values, and a plurality of reference values;
(b) setting a variable A to the lower temperature limit T1;
(c) activating the cooling device for cooling the chamber of the food storage apparatus;
(d) measuring an elapsed time t1' for the temperature of the chamber to reach the lower temperature limit T1 after the cooling device has been activated initially;
(e) comparing the elapsed time t1' measured with the predetermined elapsed time t1;
(f) setting the value of the variable A to one of the compensating values if the elapsed time t1' measured is longer than t1;
(g) deactivating the cooling device at an instant when the temperature of the chamber reaches the value of the variable A;
(h) activating the cooling device again at an instant when the temperature of the chamber is increased by the difference ΔT;
(i) measuring a temperature restoring time t3' of the chamber from the deactivating time to the subsequent activating time of the cooling device and comparing it with the predetermined temperature restoring time t3;
(j) comparing a difference $\Delta t3$ between the temperature restoring time t3' measured and the predetermined temperature restoring time t3 with the reference values, and setting the value of the variable A to one of the compensating values if t3' is less than t3, otherwise setting the value of the variable A to the lower temperature limit T1; and
(k) returning to step (g) if electric power to the food storage apparatus is not cut off.

5,699,675

HEAT EXCHANGER AND COOLING APPARATUS MOUNTED WITH THE SAME

Toshitake Nagai; Yonezo Ikumi; Takahide Kakinuma; Norio Sawada; Koji Sato, and Masato Watanabe, all of Gunma-ken, Japan, assignors to Sanyo Electric Co., Ltd., Osaka, Japan

Filed Jun. 23, 1995, Ser. No. 494,026

Claims priority, application Japan, Sep. 16, 1994, 6-248599; Nov. 14, 1994, 6-304299

Int. Cl.^{6} F25B *45/00*

U.S. Cl. 62—149 **6 Claims**

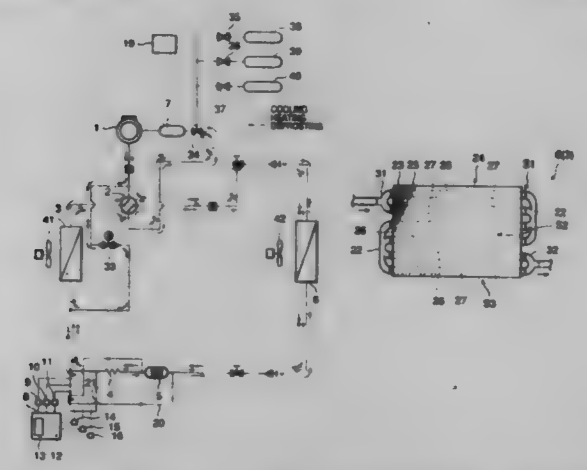

3. A cooling apparatus in which a refrigerant circuit is formed by connecting a compressor, an outdoor heat exchanger, a pressure reducing device, and an indoor heat exchanger through piping,
wherein said indoor heat exchanger and/or outdoor heat exchanger have a plurality of sections, each section having a plurality of parallel refrigerant conduits and a plurality of fins through which said conduits pass, a connector for connecting the ends of said parallel conduits of one section for communication with the ends of the parallel conduits of another section through a single common passage, the inner diameter of the common single passage of the connector for placing sections in communication with each other being smaller than an inner diameter of the refrigerant conduits.

5,699,676

REFRIGERATOR UNIT WITH LIGHTED DOOR

Robert J. Trulaske, Sr., St. Louis, Mo., assignor to True Manufacturing Company, Inc., O'Fallon, Mo.

Filed Sep. 29, 1995, Ser. No. 536,465

Int. Cl.^{6} F25D *23/02*

U.S. Cl. 62—264 **9 Claims**

1. A refrigerator unit with a lighted door, comprising:
(A) a cabinet including a top, bottom and opposed sides defining a front opening;
(B) a door including a door frame and means mounting the door frame to said cabinet, said door frame having an inside and outside and including a top framing member, a bottom framing member, opposed side framing members and a glass panel having an exterior and an interior; and
(C) a lighting assembly including a base member having opposed ends and disposed adjacent one of said side framing members and extending substantially between said top and bottom door framing members and top and bottom light holding fixtures at each end of said base member and a lighting element extending between said light holding fixtures and being disposed rearwardly of said interior of the glass panel;
(D) said door side frame including a pair of inwardly projecting arms; and
(E) said lighting assembly base member interfits said inwardly projecting arms and includes a pair of inwardly projecting

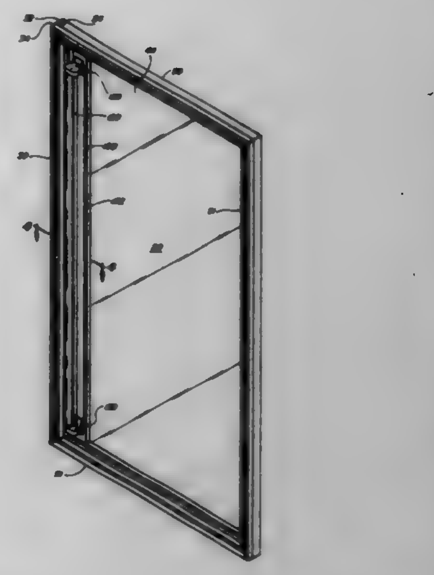

arms receiving said glass pane. said base member providing a fill member between said glass panel and said side framing member.

5,699,677

COMPRESSOR MOUNTED DRAIN PAN UTILIZING POLYURETHANE ADHESIVE

Kevin E. Hakala, St. Cloud; Joseph D. Kunkel, Clearwater, and Glenn L. Johnson, Sauk Rapids, all of Minn., assignors to White Consolidated Industries, Inc., Cleveland, Ohio

Filed Nov. 7, 1996, Ser. No. 745,044

Int. Cl.^{6} F25D *19/00*

U.S. Cl. 62—291 **17 Claims**

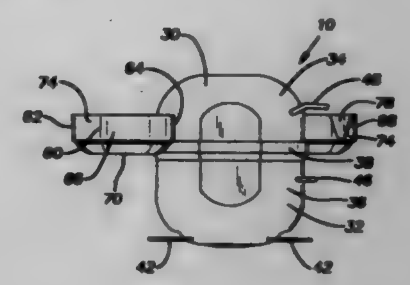

9. A compressor and drain pan assembly comprising:
a compressor for use in a refrigeration system, said compressor having an outer housing;
a metal drain pan having (i) an outer arcuate wall having a first end and a second end, (ii) an inner arcuate wall having a first end and a second end, (iii) a first arcuate end wall extending between and adjoining said first end of said outer arcuate wall and said first end of said inner arcuate wall, and (iv) a second arcuate end wall extending between and adjoining said second end of said outer arcuate wall and said second end of said inner arcuate wall; and
an adhesive disposed between said outer housing of said compressor and said inner arcuate wall of said drain pan, to thereby adhere said drain pan to said compressor.

5,699,678

CHARGING DEVICE

Phil Trigiani, 1786 Mattawa Avenue, Mississauga, Ontario, Canada, L4X 1K1

Filed Apr. 17, 1996, Ser. No. 634,025

Int. Cl.[6] F25B *45/00*

U.S. Cl. 62—292 **8 Claims**

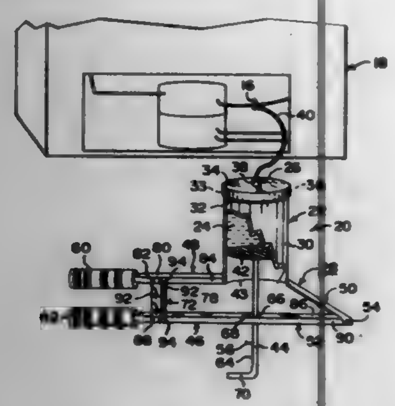

1. An improved charging device comprising:

A) a vessel for holding a liquid therein, said vessel including a cylindrical housing opened at both ends, with external threads formed on a first open end of said cylindrical housing and a cap having internal threads which can thread onto said external threads on said cylindrical housing;

B) means on said vessel for allowing the liquid to exit therefrom; and

C) means on said vessel for dispensing the liquid in controlled amounts through said exit means, said dispensing means including:

1) a disc shaped push plate which snugly fits into a second open end of said cylindrical housing in a sliding manner;

2) a push rod on said push plate, whereby said push rod extends outwardly from the second oven end of said cylindrical housing; and

3) means for driving said push rod into said cylindrical housing with elevated levels of thrust, so that said push plate will force the liquid out of said liquid exit means, said driving means including:

a) a fixed arm extending horizontally from a first lower side of said cylindrical housing;

b) a pivot arm extending at an angle downwardly from a second lower side of said cylindrical housing opposite from said fixed arm;

c) an actuating arm;

d) a fulcrum pin connecting a free end of said pivot arm to one end of said actuating arm, so that said actuating arm extends below said fixed arm;

e) a ratchet mechanism on said push rod operable by said actuating arm when said actuating arm is manually pivoted towards said fixed arm, so that said push rod will move up into the second open end of said cylindrical housing; and

f) means for limiting movement of said actuating arm towards said fixed arm to slowly operate said ratchet mechanism, said movement limiting means including:

i) a first retainer pin extending downwardly from said fixed arm;

ii) a second retainer pin extending upwardly from said actuating arm directly below said first retainer pin;

iii) a spring extending between said first retainer pin and said second retainer pin to normally bias said actuating arm away from said fixed arm;

iv) said fixed arm being an inverted U-shaved channel having a pair of spaced apart vertical slots in each side wall of said U-shaped channel adjacent said first retainer pin;

v) said actuating arm being a U-shaped channel having a pair of spaced apart vertical slots in each side wall of said U-shaped channel adjacent said second retainer pin and

vi) a pair of rectangular plates, each said plate having a pair of hooks on each short end, so that said hooks on a first short end of each said plate can engage with said slots in each said side wall of said fixed arm, while said hooks on a second short end of each said plate can engage with said slots in each said side wall of said actuating arm to limit the movement of said actuating arm.

5,699,679

CRYOGENIC AEROSOL SEPARATOR

Jin Jwang Wu, Ossining; William Albert Cavaliere, Verbank; James Patrick Norum, Millwood, and Stefan Schmitz, Pleasant Valley, all of N.Y., assignors to International Business Machines Corporation, Armonk, N.Y.

Filed Jul. 31, 1996, Ser. No. 691,702

Int. Cl.[6] F25J *1/00*

U.S. Cl. 62—617 **29 Claims**

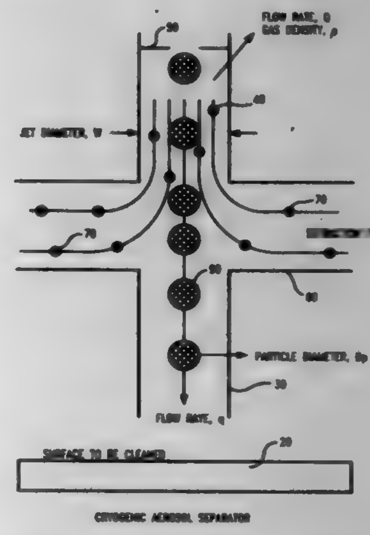

1. A cryogenic aerosol classifier for inertially separating and classifying particles from a stream of aerosol, comprising:

cryogenic aerosol generating means for expanding a cryogenic gas-liquid mixture at a first pressure to a second pressure lower than said first pressure, thereby generating a stream of aerosol having high and low mobility particles; and

separator means provided with a diverter coupled to said cryogenic aerosol generating means for removing and diverting particles having high mobility from said stream of aerosol.

5,699,680

WIRES INCORPORATING A HELICAL COMPONENT, ASSEMBLIES THEREOF, AND USE OF SAID ASSEMBLIES AS CATALYZER AND/OR TO RECOVER PRECIOUS METALS

Jean-Paul Guerlet, Paris, and Claude Lambert, Saint-Witz, both of France, assignors to Engelhard-Clal SAS, Paris, France

PCT No. PCT/FR93/00752, § 371 Date Jan. 31, 1995, § 102(e) Date Jan. 31, 1995, PCT Pub. No. WO94/03665, PCT Pub. Date Feb. 17, 1994

PCT Filed Jul. 22, 1993, Ser. No. 379,478

Claims priority, application France, Jul. 31, 1992, 92 09578

Int. Cl.[6] D04B *21/12;* **D03D** *15/02;* **B01J** *23/40*

U.S. Cl. 66—202 **57 Claims**

1. A wire comprising a helical winding made of at least one first thread which is helically wound around at least one second thread

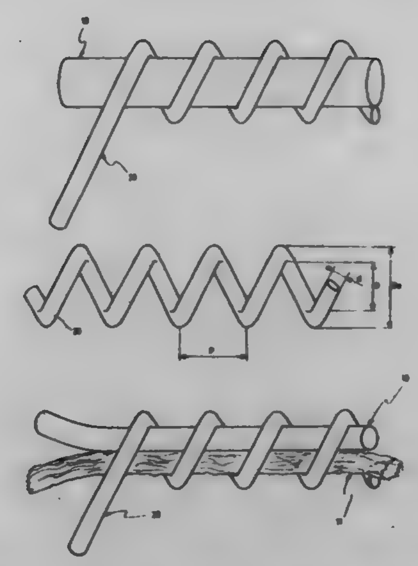

constituting the core of said wire, wherein the helical winding comprises at least one first thread made of material selected from the group consisting of the metals of the platinoid group and alloys thereof.

5,699,681

METHOD AND APPARATUS FOR PRECISION PATTERN KNITTING ON A WARP KNITTING MACHINE

Peter H. Nittmann, Wake Forest, N.C., assignor to Albani Bayeux, Inc., Henderson, N.C.

Filed May 14, 1996, Ser. No. 645,825

Int. Cl.[6] D04B *27/14*

U.S. Cl. 66—213 **25 Claims**

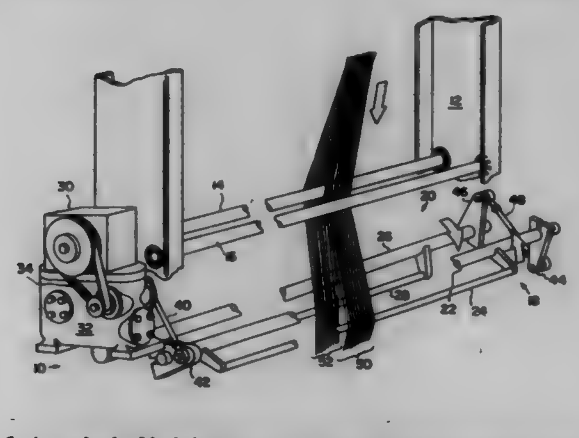

1. A method of knitting yarns on a warp knitting machine into a fabric with lay-in warp yarns wherein at least a portion of said lay-in warp yarns have varying intermittent spacing between the lengths thereof, said method comprising the steps of:

(A) dividedly passing at least a first and a second group of lay-in warp yarns to be knitted along separate paths prior to knitting in a warp knitting machine; and

(B) increasing and decreasing tension of said first and second groups of lay-in warp yarns utilizing computer control means during knitting whereby said first and second groups of lay-in warp yarns tighten and loosen to cause said first and second groups of lay-in warp yarns to be knitted by the warp knitting machine with varying intermittent spacing between horizontally corresponding lengths of the lay-in warp yarns.

5,699,682

WASHING TUB OF A CLOTHES WASHING MACHINE

Piero Durazzani, Porcia, Italy, assignor to Electrolux Zanussi Elettrodomestici S.p.A., Pordenone, Italy

PCT No. PCT/EP94/03941, § 371 Date Apr. 15, 1996, § 102(e) Date Apr. 15, 1996, PCT Pub. No. WO95/17543, PCT Pub. Date Jun. 29, 1995

PCT Filed Nov. 28, 1994, Ser. No. 628,742

Claims priority, application Italy, Dec. 23, 1993, PN930036 U

Int. Cl.[6] D06F *37/04;37/22*

U.S. Cl. 68—140 **11 Claims**

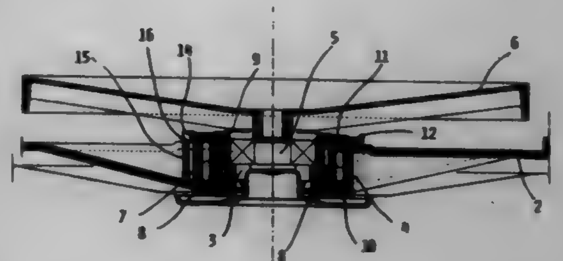

1. A domestic clothes washing machine having a washing tub made of plastic material, the washing tub having a cylindrically shaped peripheral envelope, a rear wall (2) defining a cylindrically shaped central portion (4) with an inner rim, a circular front wall, and a passing-through hub arranged at the center of said rear wall and inserted in the central portion (4) of said rear wall, said hub carrying a bearing (7) provided to support a central shaft (5) of a drum (6), characterized in that said hub comprises a first perimetral sleeve (8) having an inner rim, an outer cylindrical rim and an inner cylindrical cavity, which is capable of being inserted from outside the tub and whose outer cylindrical rim engages the inner rim of said cylindrically shaped central portion (4), a second sleeve (9) having an outer rim, which is capable of being inserted from inside the tub into the inner cylindrical cavity of said first sleeve and whose outer rim engages the inner rim of said first perimetral sleeve (8), said second sleeve (9) being adapted to support said bearing (7).

5,699,683

FILTER SLEEVE FOR TUBULAR FILTER CORE

Gerd Rieker, Troy, N.Y., assignor to Sonoco Products Company, Inc., Hartsville, S.C.

Filed Jun. 14, 1996, Ser. No. 663,825

Int. Cl.[6] D06B *5/18;* **B65H** *75/22*

U.S. Cl. 68—198 **15 Claims**

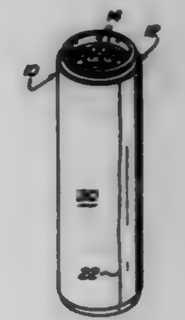

1. A textile yarn carrier for use in dyeing or wet finishing textile yarn comprising:

a hollow tubular core having passageways through the sidewall thereof, and

a filter material wrapped around the outer circumference of the tubular core, the filter material formed into a sleeve, the sleeve having a seam formed by a bond between abutting edges of the filter material.

5,699,684
BICYCLE SECURITY MOUNT
John R. Sulin, 861 Fisher Rd., Fitchburg, Mass. 01420
Filed Aug. 20, 1996, Ser. No. 700,169
Int. Cl.^{6} B62H *5/06;* **E05B** *71/00*
U.S. Cl. 70—234 **5 Claims**

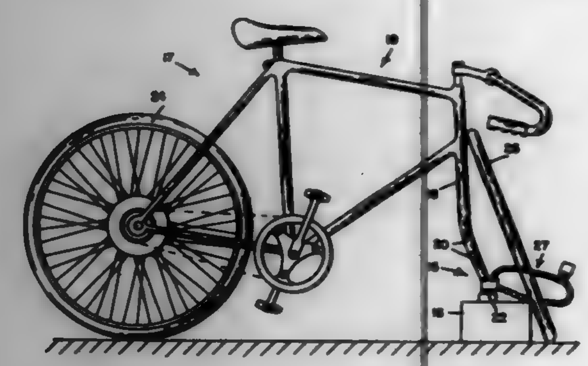

1. A bicycle security mount for a bicycle having a two-tined fork which has a forwardly facing open ended slot in each tine, said bicycle security mount comprising:
(a) a base;
(b) securing means for securing the base to a fixed support;
(c) a first supporting arm fixed to the base, said first supporting arm having a first threaded aperture;
(d) a second supporting arm fixed to the base and spaced from said first supporting arm, said second supporting arm having a second threaded aperture which is axially aligned with said first threaded aperture;
(e) a first bolt having a polygonal head and a threaded shank which is threaded into said first aperture;
(f) a second bolt having a polygonal head and a threaded shank which is threaded into said second aperture;
(g) a first shield mounted on said first bolt, said first shield having a bore which is narrower than the head of said first bolt and a counterbore which is wider and longer than the head of said first bolt, said first shield being positioned on said first bolt so that the shank of said first bolt extends freely through the bore of said first shield and the head of said first bolt lies within the counterbore of said first shield;
(h) a second shield mounted on said second bolt, said second shield having a bore which is narrower than the head of said second bolt and a counterbore which is wider and longer than the head of said second bolt, said second shield being positioned on said second bolt so that the shank of said second bolt extends freely through the bore of said second shield and the head of said second bolt lies within the counterbore of said second shield; and
(i) said first and second supporting arms being spaced so that the tines of a wheelless front fork of a bicycle can straddle said first and second supporting arms and so that the shanks of said first and second bolts extend into the open ended slots of the front fork and the tines of the front fork are positioned respectively between said first and second arms and the said first and second shields, the heads of said first and second bolts lying entirely within the respective counterbores of said first and second shields when said fork is applied to the shank of said first and second bolts and said first and second bolts are tightened to clamp said front fork between said first and second supporting arms and said first and second shields, each of said counterbores having a diameter which is greater than the width of said first and second bolts, said diameter being too small to receive a conventional socket wrench but large enough to receive a socket wrench which is specifically designed for said bicycle security mount.

5,699,685
CENTRAL LOCK SYSTEM FOR AN AUTOMOTIVE VEHICLE WITH SATELLITE PROCESSORS AT RESPECTIVE LOCKS
Achim Jahrsetz, Velbert; Frank Kleefeldt, Heiligenhaus; Wilfried Ostermann, Essen, and Fred Weiskopf, Herne, all of Germany, assignors to Kiekert AG, Heiligenhaus, Germany
Filed May 17, 1996, Ser. No. 650,136
Claims priority, application Germany, Aug. 18, 1995, 195 30 720.8
Int. Cl.^{6} E65B *49/00;* **B60R** *25/00*
U.S. Cl. 70—264 **18 Claims**

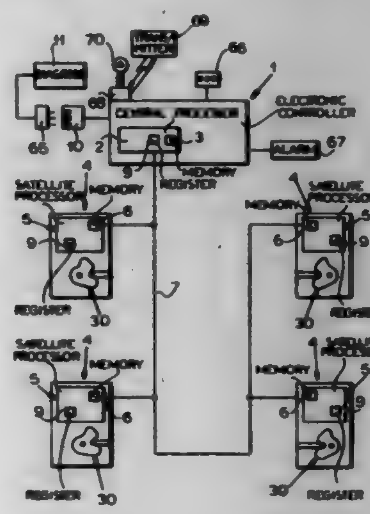

1. A centralized lock system for an automotive vehicle having a plurality of lockable doors, said lock system comprising:
a plurality of electrically operated automotive vehicle door locks;
an electronic controller for said locks and including a central processor and a code word storage memory operatively connected to said processor for storing a controller-identity code word;
a respective satellite processor assigned to each of said locks and having a code word storage memory for a respective lock-identity code word;
means for storing in each of said memories a system-specific identity code word specific to the centralized lock system;
a single conductor bus coupling said satellite processors with said central processor and with each other and means for bidirectional multiplexed communicaton between said processors along said single conductor bus for controlling said satellite processors from said central processor and for back and forth transmission of said system-specific identity code word over said conductor between said central and satellite processors for effecting an identity test of a stored system-specific identity code word with a transmitted system-specific identity code word in at least one of said processors; and
means at least said one of said processors for deactivating at least one of said electronic controller and of said door locks upon a failure of said identity test.

5,699,686
DEVICE FOR ELECTROMAGNETICALLY SECURING A LOCK BARREL
Harald Neumayer, and Roland Krewenka, both of Vienna, Austria, assignors to EVVA-Werk Spezialerzeugung von Zylinder- und Sicherheitsschlössern Gesellschaft m.b.H. & Co., Vienna, Austria
PCT No. PCT/AT95/00139, § 371 Date Feb. 22, 1996, § 102(e) Date Feb. 22, 1996, PCT Pub. No. WO96/00830, PCT Pub. Date Jan. 11, 1996
PCT Filed Jun. 30, 1995, Ser. No. 600,978
Claims priority, application Austria, Jun. 30, 1994, 1294/94
Int. Cl.^{6} E05B *47/06*
U.S. Cl. 70—283 **8 Claims**

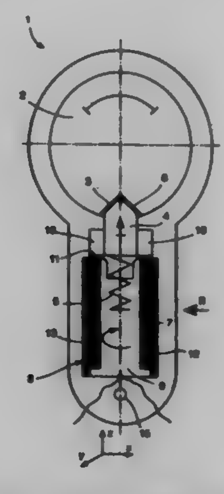

1. A lock comprising a closing cylinder rotatable about a first axis, said closing cylinder having a recess in a circumferential surface thereof; a tumbler movable into and out of said recess along a second axis substantially perpendicular to said first axis and an electromagnetic rotary drive comprising a rotor for allowing movement of said tumbler into and out of said recess, said rotor arranged to rotate about said second axis.

5,699,687
FIREARM SECURITY DEVICE
John M. Pittman, 2540 Dillard Rd., Bowling Green, Ky. 42104
Filed Jun. 6, 1996, Ser. No. 659,291
Int. Cl.^{6} F41A *17/02*
U.S. Cl. 70—376 **25 Claims**

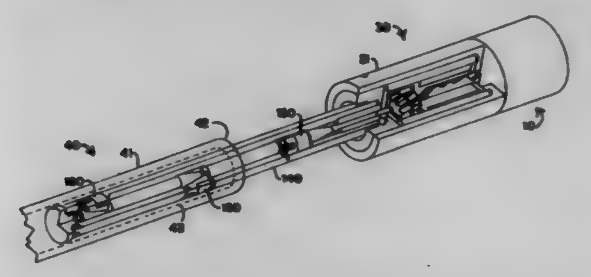

1. A locking device for controlling access to a length of a tubular element having an inner surface, said locking device comprising:
a shaft having one or more conical sections,
one or more sets of cams engageable with said one or more conical sections of said shaft, wherein at least one cam of each of said one or more sets of cams has a contact pad pivotably mounted thereon and substantially conforming with a shape of said inner surface of said tubular element,
a lock mechanism,
and a control means for use within said lock mechanism to control movement of said shaft.

5,699,688
FEED CONTROL SYSTEM
Robert T. Allred, High Point, N.C., assignor to Dynamic Feeds, Inc., High Point, N.C.
Filed Oct. 31, 1995, Ser. No. 550,712
Int. Cl.^{6} B21D *43/11*
U.S. Cl. 72—20.5 **41 Claims**

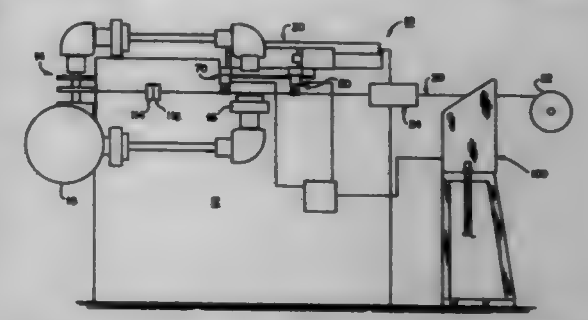

1. A control system for a metal forming machine having a cycling press and a cycling stock feeding mechanism, the stock feeding mechanism including a motor-driven screw assembly and a feed apparatus that is linearly movable in response to rotation of the screw assembly for engaging and feeding stock into the cycling press, said control system comprising:
(a) a microprocessor for controlling cycling of the feed apparatus and for synchronizing the cycling of the feed apparatus with the cycling of the press;
(b) a resolver interconnected between said screw assembly and said microprocessor for monitoring rotational position of the screw assembly and for communicating the rotational position of the screw assembly to said microprocessor;
(c) a feed control sensor interconnected between said press and said microprocessor for communicating the position of the press in a press cycle to said microprocessor; and
(d) wherein the metal forming machine includes a hand wheel for manually cycling the press, and said microprocessor includes a hand mode encoder operatively connected to said hand wheel for determining the position of the press in a manually driven press cycle.

5,699,689
METHOD OF AND APPARATUS FOR FORMING A DISC-SHAPED BLANK
Shigeaki Yamanaka, Hiroshima, Japan, assignor to Kubota Iron Works Co., Ltd., Hiroshima, Japan
Filed Jun. 18, 1996, Ser. No. 665,693
Claims priority, application Japan, Jun. 30, 1995, HEI7-165845
Int. Cl.^{6} B21H *5/02*
U.S. Cl. 72—68 **3 Claims**

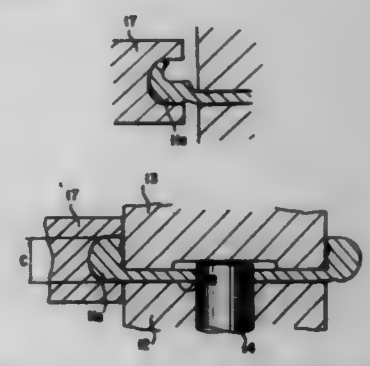

1. A method of forming a disc-shaped blank in which a disc-shaped plate material is, at an outer peripheral portion thereof, swaged towards an axial side of said plate material with a roll die to thicken said outer peripheral portion and is shaped into a

cross-sectional configuration corresponding to that which is generally a horizontally elongated and vertically shortened letter "U", characterized in that said method comprises the steps of:

a) sandwiching, securely between a pair of sandwiching members, said disc-shaped thin plate material except for said outer peripheral portion including a swaging portion projecting from said sandwiching members;
b) swaging exclusively said swaging portion so that an outermost end thereof may be shaped into a configuration which in cross-section is generally triangular having an outwardly tapered side surface and a rounded top and thus may also be thick-walled while a root portion of said plate material that is sandwiched between said sandwiching members remains in a thin thickness original of said plate material;
c) thereafter, bending said outer peripheral portion including said swaged portion at a site adjacent to said root portion thereof from one side surface of said plate material towards a direction of the other side surface thereof and forming a bent portion into an L-shaped configuration in cross section so that said bent portion may lie within a predetermined width; and

thereafter, forging said bent portion in a closed state to assume a configuration which is rectangular in cross section so that an inner surface and outer surface thereof may each have predetermined dimensions.

5,699,690
METHOD AND APPARATUS FOR MANUFACTURING HOLLOW STEEL BARS
Munekatsu Furugen, Nishinomiya; Shotaro Hamazaki, Ibaragi; Norimasa Kameoka, and Atsuhisai Okamoto, both of Amagasaki, all of Japan, assignors to Sumitomo Metal Industries, Ltd., Osaka, Japan
Filed Jun. 11, 1996, Ser. No. 661,700
Claims priority, application Japan, Jun. 19, 1995, 7-151623
Int. Cl.[6] B21B *19/04*
U.S. Cl. 72—69 **7 Claims**

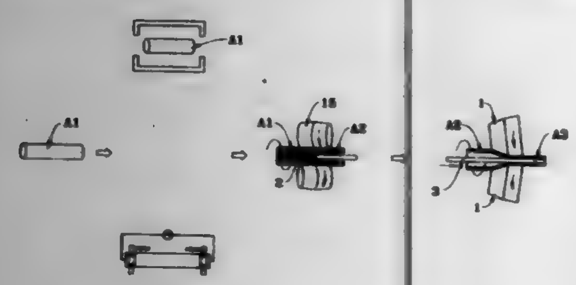

1. A hollow steel bar manufacturing method comprising steps of:
heating a steel billet;
piercing the heated billet with a piercer to form a hollow workpiece meeting a condition expressed by the following formula (1);
inserting a mandrel serving as an inner surface sizing tool into the hollow workpiece; and
cross-rolling the hollow workepiece having the mandrel inserted in the bore by a cross-rolling mill having three rolls arranged around a pass line for a diameter reduction process and a wall thickness sizing process meeting a condition expressed by the following formula (2);

$$t_0/d_0 \geq 0.1 \quad (1)$$

$$Rt \geq 1.5Rd \quad (2)$$

where
t_0: the wall thickness of the hollow workpiece before cross-rolling
d_0: the outside diameter of the hollow workpiece before cross-rolling
Rt: wall thickness reduction (%) expressed by

$$Rt=(t_0-t_1)/t_0\times 100$$

Rd: outside diameter reduction (%) expressed by

$$Rd=(d_0-d_1)/d_0\times 100$$

t_1: the wall thickness of the steel bar after cross rolling
d_1: the outside diameter of the hollow steel bar after cross rolling.

5,699,691
ADJUSTING APPARATUS FOR ROLL THREADING DIE HEAD
Masaaki Maruyama, Soraku-gun, Japan, assignor to Rex Industries Co., Ltd., Japan
Filed Aug. 15, 1995, Ser. No. 515,142
Claims priority, application Japan, Aug. 15, 1994, 6-191603
Int. Cl.[6] B21B *31/26;* **B21H** *3/04*
U.S. Cl. 72—104 **6 Claims**

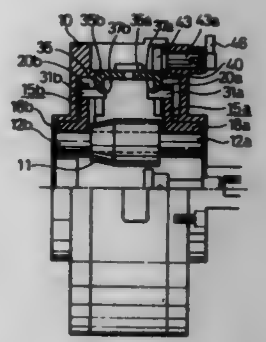

1. An adjusting apparatus for a roll threading die head with a head body having a plurality of threading rollers located on an imaginary circle concentrical to an axis of a cylindrical workpiece to be threaded, wherein the improvement comprises eccentric bearings which rotatably support the corresponding threading rollers at opposite ends of the rollers and which are rotatable about axes eccentric with respect to the axes of rotation of the respective threading rollers, and a rotor which simultaneously rotates the eccentric bearings about their axes by the same angular displacement wherein said rotor is comprised of front and rear annular plates which are interconnected together, said front and rear annular plates including elongated grooves therein, said eccentric bearings having flanges with pivot pins extending therefrom into said grooves.

5,699,692
TOOL MECHANISMS FOR DEEP ROLLING MACHINES
Vincent J. Lonero, Bloomfield Hills, and Shawn D. Luteran, Waterford, both of Mich., assignors to Lonero Engineering CO., Inc., Troy, Mich.
Filed Oct. 30, 1996, Ser. No. 741,044
Int. Cl.[6] B21B *27/10*
U.S. Cl. 72—110 **12 Claims**

1. A tool mechanism for use in the deep rolling of crankshafts or like products, comprising:
a) a housing having a side forming an annular opening,
b) a cage formed at one end of said housing,

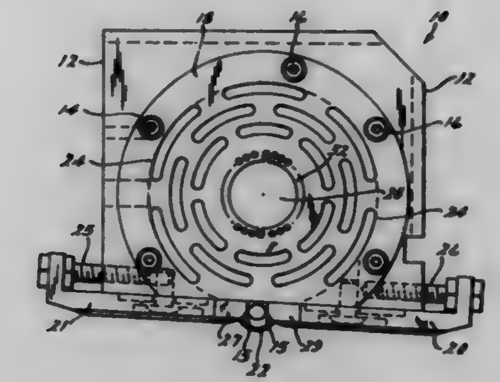

c) work rollers operatively mounted in said cage and operatively inclined outward to physically engage a fillet of said crankshaft, and
d) at least one annular cover plate secured to said housing at said annular opening, said annular cover plate having a plurality of openings.

5,699,693
WIDTHWISE COMPRESSING MACHINE AND METHOD USING VIBRATIONS TO REDUCE MATERIAL WIDTH
Tadahiko Nogami, Mito; Ichiro Nakamura, Hitachinaka; Kenji Hiraku; Hiroyuki Sadamori, both of Ibaraki-ken; Kenichi Yasuda, Hitachinaka; Kenjiro Narita, Hitachi; Kenji Horii, Hitachi, and Hironori Shimogama, Hitachi, all of Japan, assignors to Hitachi, Ltd., Tokyo, Japan
Filed Sep. 12, 1995, Ser. No. 527,182
Claims priority, application Japan, Sep. 14, 1994, 6-219820
Int. Cl.[6] B21B *11/00;15/00;* **B21J** *5/00*
U.S. Cl. 72—199 **31 Claims**

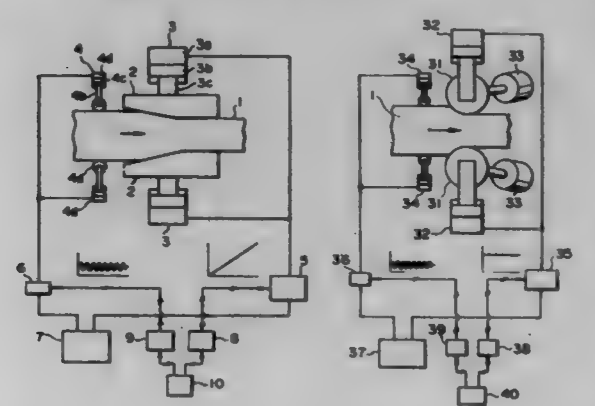

1. A widthwise-compressing machine for applying a compressive force to a material to reduce a width of the said material while applying vibrations to said material to forcibly vibrate said material, the widthwise-compressing machine comprising:
compression means for producing said compressive force forming a working force to apply said compressive force through press tools comprising anvil blocks to said material; and
vibration-applying means for applying said vibration widthwise of said material, said vibration-applying means being provided independently of said compression means.

5,699,694
HEAT SHIELDS
William Robert Laws, and Geoffrey Ronald Reed, both of Surrey, Great Britain, assignors to Encomech Engineering Services Ltd., Surrey, England
Filed May 22, 1996, Ser. No. 651,487
Claims priority, application United Kingdom, May 26, 1995, 9510740
Int. Cl.[6] B21B *27/06*
U.S. Cl. 72—200 **12 Claims**

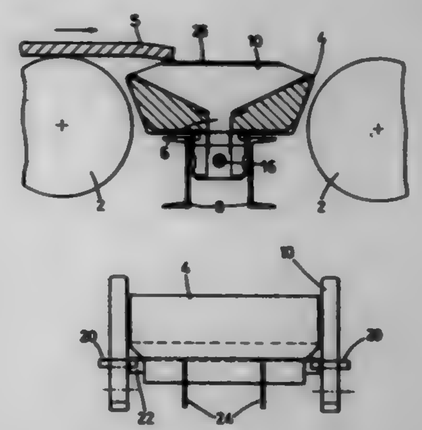

1. A heat shield arrangement for a roller table comprising a series of spaced rollers, a material path defined on said table for hot material supported by the rollers, heat shield panels movably supported between successive rollers, said panels having top faces of said panels directed towards said material path and being inclined to the horizontal in order to permit particles deposited on them to slide off the panels, members adjacent the panels projecting above said top faces of the panels, mounting means supporting said members with limited freedom of movement relative to said mounting means, said panels being at least partially supported by said projecting members at least when said members are moved upwardly relative to the mounting means, in order to thereby disturb the panels to assist the movement of particles resting on the panel top faces.

5,699,695
SPATIAL, PARALLEL-ARCHITECTURE ROBOTIC CARPAL WRIST
Stephen L. Canfield, Newport; Charles F. Reinholtz, Blacksburg; Robert J. Salerno, Radford, and Anthony J. Ganino, Blacksburg, all of Va., assignors to Virginia Tech Intellectual Properties, Inc., Blacksburg, Va.
Filed May 1, 1996, Ser. No. 641,402
Int. Cl.[6] B25J *17/02*
U.S. Cl. 74—490.06 **19 Claims**

1. A device for the movement and positioning of an element in space, comprising:
a basal plate;
a distal plate;
six linking members, each having two ends and being of substantially equal length;
a first three of said linking members each being connected at one end to said basal plate by a basal joint allowing a single degree-of-freedom, and at an opposite end to one of a second three of said linking members by a mid-joint allowing three degrees-of-freedom, said mid-joint comprising a plurality of revolute joints; and

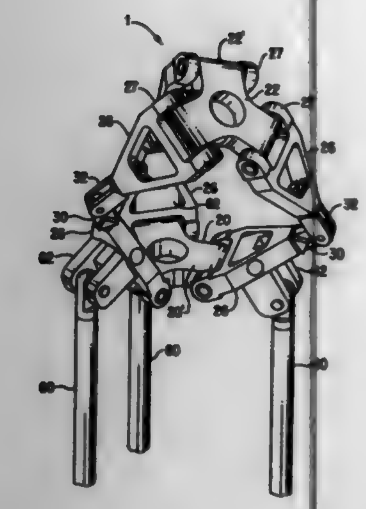

each of said second three of said linking members being connected at one end to said distal plate by a distal joint allowing a single degree-of-freedom.

5,699,696

Patent Not Issued For This Number

5,699,697

SLOTTED SWIVEL TUBE

John P. Petruccello, Detroit, and Michael Reasoner, Ortonville, both of Mich., assignors to Teleflex Incorporated, Plymouth Meeting, Pa.

Filed Oct. 1, 1996, Ser. No. 723,890

Int. Cl.⁶ F16C *1/22*

U.S. Cl. 74—502.6 4 Claims

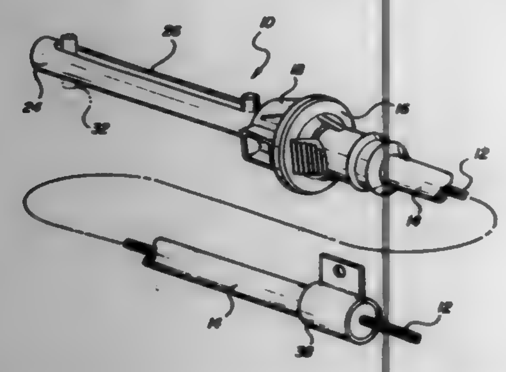

1. A motion transmitting remote control assembly (10) for transmitting motion in a curved path, said assembly comprising:
a core element (12) for transmitting forces,
a conduit (14) for movably supporting said core element (12),
a ferrule (16) for supporting said conduit (14),
a tube (24) extending from said ferrule (16),
said tube (24) defining at least one slot (26) extending along said tube (24),
a terminal (28) slidably disposed in said tube (24),
said terminal (28) having a cross pin bore (30),
a cross pin (32) disposed in said cross pin bore (30) and having a hole (34) extending transversely therethrough, said core element (12) extending through said hole (34) to retain said cross pin (32) in said bore (30), and retainer means (36) for preventing said core element (12) from being withdrawn from said terminal (28).

5,699,698

SYSTEM FOR EXTENDING OR RETRACTING TWO MEMBERS AND CAM-LOCKING THE MEMBERS IN THE EXTENDED POSITION

Freddy Geyer, Tanneron, France, assignor to Aerospatiale Societe Nationale Industrielle, Paris, France

PCT No. PCT/FR95/00967, § 371 Date Mar. 5, 1996, § 102(e) Date Mar. 5, 1996, PCT Pub. No. WO96/02418, PCT Pub. Date Feb. 1, 1996

PCT Filed Jul. 19, 1995, Ser. No. 605,061

Claims priority, application France, Jul. 20, 1994, 94 08966

Int. Cl.⁶ G05G *1/04*

U.S. Cl. 74—526 9 Claims

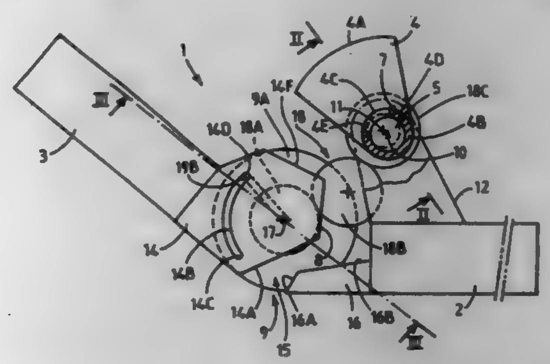

1. System for unfolding or folding up a first and a second element into an unfolded or a folded position, wherein said first and second elements are linked in rotation one with respect to the other about an axis of articulation and wherein said system is for locking or unlocking said first and second elements at least in the unfolded position, said system including:
a cam (4), rotatably connected to the first element (2) and having a contact surface (4A) in the shape of logarithmic spiral having an origin;
a flat bearing face (8) provided on the second element (3) and against which said contact surface (4A) of the cam can press;
a shaft (5), rotatably connecting said cam to said first element on which the cam can turn about a first axis (10) containing the origin of the spiral, and wherein said shaft is mounted so that it can also rotate with respect to said first element about a second axis (11) which is offset parallel to said first axis (10) of rotation of the cam;
elastic means (6) tending to make said cam turn in a first direction such that said contact surface (4A) of the cam moves towards said beating face;
a finger (7), integral in terms of rotation with said shaft and capable of driving said cam in a second direction, opposite the first direction; and
drive means (9) for driving the said shaft in rotation, wherein said drive means (9) are motorized and also drive said rotation of the first and second elements one with respect to the other about said axis of articulation, and wherein said drive means comprise:
a motor (9A), having an axis of rotation (17) which is parallel to the first and second axes of rotation (10, 11) of the cam, said axis of rotation (17) corresponding to said axis of articulation;
a transmission (18) linking said motor to said shaft; and
a radial link (19), integral in terms of rotation with said motor and able to drive said second element in rotation about said axis of articulation.

5,699,699

CONNECTING STRUCTURE BETWEEN BICYCLE PEDAL AND CLEAT, BICYCLE PEDAL AND CLEAT

Masashi Nagano, Izumi, Japan, assignor to Shimano, Inc., Japan

Division of Ser. No. 971,269, Nov. 4, 1992, Pat. No. 5,522,282, Continuation of Ser. No. 611,504, Nov. 13, 1990, abandoned. This application Feb. 6, 1996, Ser. No. 597,213

Claims priority, application Japan, Nov. 14, 1989, 1-296415; Nov. 16, 1989, 1-297860; Nov. 16, 1989, 1-297861; Nov. 22, 1989, 1-135988

Int. Cl.⁶ G05G *1/14*

U.S. Cl. 74—594.6 7 Claims

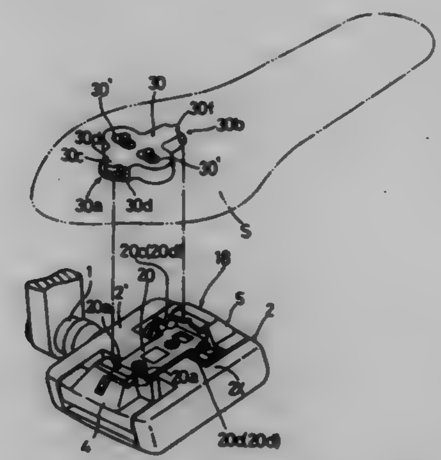

1. A pedal for engaging a cleat having a front engaging portion and a rear engaging portion, said pedal comprising:
a pedal body having
a first hook for engaging said front engaging portion of said cleat;
a second hook for engaging said rear engaging portion of said cleat;
a pedal shaft for rotatably supporting said pedal body: and
a contact plate for contacting said cleat;
wherein said second hook is pivoted from a cleat engaging position to a cleat disengaging position by rotating said cleat about an axis of rotation while said cleat is in contact with said contact plate; and
cleat-movement restricting means provided between said pedal shaft and said first hook, said restricting means having a pair of stopper projections that are spaced apart from each other such that said front engaging portion is located between said projections when said front engaging portion is engaged with said first hook, said restricting means causing said axis of rotation of said cleat to be adjacent to said restricting means.

5,699,700

HAND TOOL AND PROCESS FOR MANUFACTURING SAME

Joseph Allen Carmien, 525 N. Maple Dr., Beverly Hills, Calif. 90210

Continuation-in-part of Ser. No. 372,437, Jan. 11, 1995, abandoned. This application Aug. 2, 1996, Ser. No. 691,746

Int. Cl.⁶ B21H *7/02*

U.S. Cl. 76—113 13 Claims

1. A process for manufacturing a hand tool, comprising the steps of:
molding a handle receiving socket of a handle adapter about an end of a tool handle;
forming the handle adapter during the molding step, wherein the handle adapter includes the handle receiving socket at one end thereof and a base portion attachable to a tool head at another end, wherein during the forming step a threaded recess is provided in the base portion of the handle adapter; and

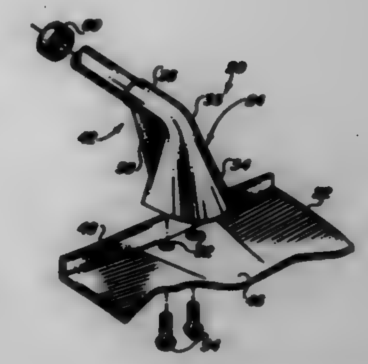

attaching the handle adapter to a tool head, including the step of threading a fastener into the threaded recess.

5,699,701

TOOL FOR REMOVING VEHICLE GAS TANK CAP

David L. Cotten, Jr., Rte. 2, Box 508A, Martin, Tenn. 38237

Filed May 7, 1996, Ser. No. 646,096

Int. Cl.⁶ B67B *7/14*

U.S. Cl. 81—3.4 4 Claims

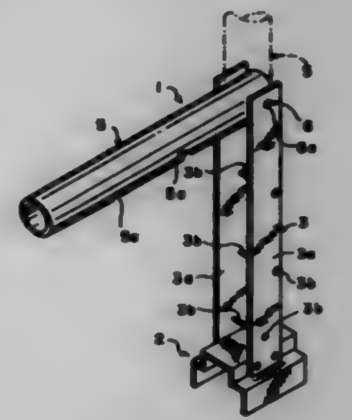

1. A tool for removing a vehicle gas tank cap comprising a cradle adapted to engage a transversely extending lug integral with a conventional gas tank cap, an extension member, said extension member comprising a pair of spaced, parallel plate members, a plurality of longitudinally spaced transversely extending pins positioned in the space between the plate members and fixedly attached thereto for maintaining the plate members in spaced relationship, fastening means fixedly securing one end of said extension member to said cradle, a handle, means pivotally connecting one end of said handle to the other end of said extension member, whereby the handle can be pivoted to the operative position to various angles relative to the extension member to accommodate the particular user, and a plurality of longitudinally spaced, transversely extending slots provided in said handle, the longitudinal spacing of said slots corresponding to the longitudinal spacing of said transversely extending pins, whereby the pins are received into the handle slots when the handle is pivoted into the space between the plate members so that the handle is wholly contained within the space between the plate members for storage of the tool.

5,699,702
WRENCHING TOOL WITH FREE-FLOATING, SELF-RELIEVING ANTI-ROTATION KEY
Alan R. Myers, Quail Valley, Calif., assignor to Fairchild Holding Corp., Chantilly, Va.
Filed Aug. 1, 1996, Ser. No. 695,782
Int. Cl.[6] B25B *21/00*
U.S. Cl. 81—56 7 Claims

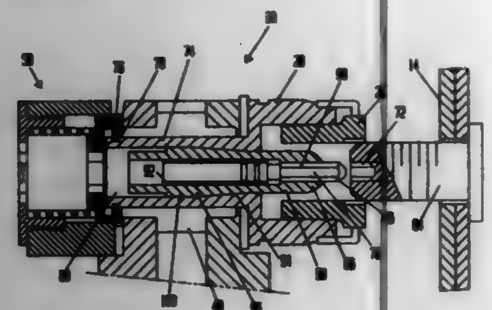

1. In a rotational wrenching tool for applying a fastener nut to a fastener pin having an end recess, said tool having a housing supporting a rotationally driven sleeve with a distal socket to receive said fastener nut, and a central through passage in which is axially slidably received a key holder, and a key removably seated in said key holder, said key having an outer end which is to be positioned in said end recess of said fastener pin for rotationally immobilizing said fastener pin, the improvement comprising:
a. a first rotational detent at the forward end of said key holder and said central through passage to rotationally index said key holder to said sleeve and including a first spring to bias said holder axially forward into engagement with said first rotational detent; and
b. a second rotational detent at the rear end of said key holder and said housing to rotationally immobilize said key holder;
whereby said key holder is driven in rotation with said sleeve until said key is seated in said end recess of said fastener pin, is rotationally immobilized during the run up of said fastener nut and is rotationally driven after application of said fastener nut to free said key and permit removal of said tool from the applied fastener.

5,699,703
SCREWING DEVICE FOR MEASURING ARRANGEMENT
Michael Habele, Waldenbuch, Germany, assignor to Robert Bosch GmbH, Stuttgart, Germany
Filed Feb. 22, 1996, Ser. No. 605,814
Claims priority, application Germany, Mar. 3, 1995, 195 07 394.3
Int. Cl.[6] B25B *29/02*
U.S. Cl. 81—57.38 4 Claims

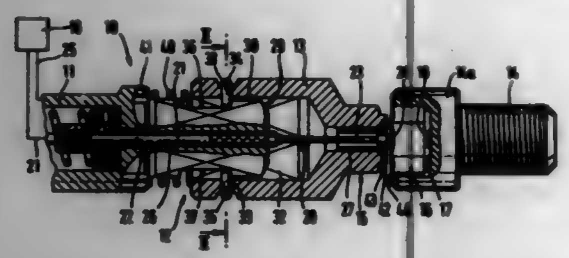

1. A screwing device with ultrasonic measuring arrangement for measuring a tension in a screw connection with a vibration body arranged on it, the screwing device comprising a screwing tool; a rotary drive shaft for transmitting a torque to said screwing tool; an evaluating device; contacting means for electrical signal transmission from said evaluation device to said vibration body and vice versa, said screwing tool being connected with said rotary drive shaft so that said screwing tool is fixed to said rotary drive shaft in a peripheral direction and is axially displaceable relative to said rotary drive shaft within a limit in an axial direction, said screwing tool being loaded axially with a spring force toward said screw connection.

5,699,704
EXIT LOCATING COLLATED SCREW STRIPS AND SCREWDRIVERS THEREFORE
G. Lyle Habermehl, 436 Calvert Dr., Gallatin, Tenn. 37066
Continuation-in-part of Ser. No. 233,909, Apr. 28, 1994, abandoned, Ser. No. 198,129, Feb. 17, 1994, Pat. No. 5,469,767, and Ser. No. 18,897, Feb. 17, 1993, Pat. No. 5,337,635. This application Oct. 19, 1995, Ser. No. 545,399
Int. Cl.[6] B25B *23/06*
U.S. Cl. 81—434 24 Claims

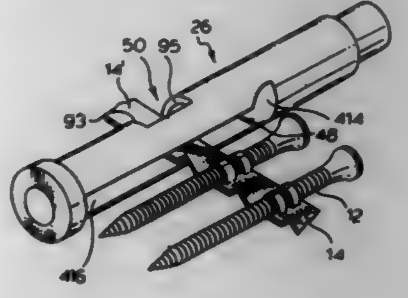

1. In combination:
(a) a screw driver assembly to drive screws collated together in a strip spaced in parallel relation from each other, the screwdriver comprising:
a guideway to receive a screw coaxially therein,
a screw-and-strip entranceway opening generally radially into the guideway on a first side thereof,
a strip exitway opening generally radially out of the guideway on a second side thereof opposite the entranceway,
the guideway, the entranceway and the exitway juxtapositioned to permit screws collated in a strip spaced in parallel relation from each other to be successively advanced through the entranceway radially into the guideway to locate each successive screw coaxially within the guideway with portions of the strip from which screws have been driven extending from the guideway via the exitway,
elongate, rotatable driver shaft means having at a forward end bit means, the shaft means reciprocally movable axially in the guideway to engage the screw with the bit means and drive the screw axially forwardly from the guideway into a workpiece,
the exitway having an axially, rearwardly directed strip supporting surface axially forward of the strip for engagement by the strip to support the strip against movement forwardly on the shaft means driving a screw axially forwardly, and
(b) a plastic holding strip holding screws spaced in parallel side-by-side relation from each other,
the strip having joining lands which extend both between the screws and axially relative the screws, and
the lands having a forwardly directed surface for engagement with the strip supporting surface of the exitway.

5,699,705
POWERED CIRCULAR SAW RETENTION APPARATUS FOR RETRACTABLE SAW BLADE GUARD
Donald Dale Sibbet, 10912 France Ave. S., Bloomington, Minn. 55431
Filed Dec. 4, 1995, Ser. No. 548,942
Int. Cl.[6] B23D *45/16*; B26D *7/22*
U.S. Cl. 83—13 20 Claims

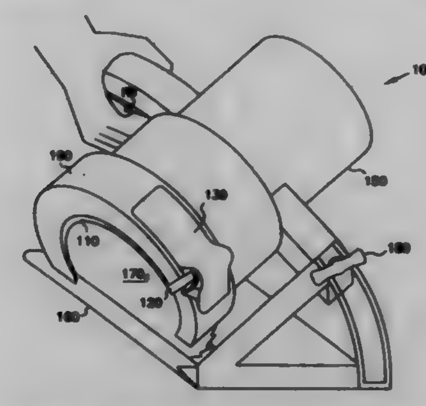

1. A retention apparatus for an electrically powered hand-held circular saw, the circular saw having a retractable lower saw blade guard, a saw blade, a saw-blade motor for rotating the saw blade, and a power on/off switch that Supplies electrical power to the saw-blade motor when activated, the retention apparatus comprising:
a lower saw blade guard (LSBG) holder coupled to the power on/off switch wherein the LSBG holder engages the lower saw blade guard only when the lower saw blade guard is in a substantially retracted position and maintains the lower saw blade guard in the retracted position when power is applied to the motor, and releases the lower saw blade guard to allow the lower saw blade guard to return to a default position of covering the saw blade when power is not applied to the motor.

5,699,706
APPARATUS FOR CUTTING A NON-METALLIC MAGNETIC COMPONENT FROM A STRIP OF NON-METALLIC MAGNETIC MATERIAL USEABLE ON A ROTOR OR THE LIKE
John E. Rode, Fonda, N.Y., assignor to Temper Corporation, Fonda, N.Y.
Continuation of Ser. No. 58,881, May 6, 1993, abandoned, which is a continuation-in-part of Ser. No. 758,907, Sep. 11, 1991, Pat. No. 5,224,259. This application Feb. 1, 1996, Ser. No. 595,346
Int. Cl.[6] B26D *7/14*; H02K *15/02*
U.S. Cl. 83—18 12 Claims

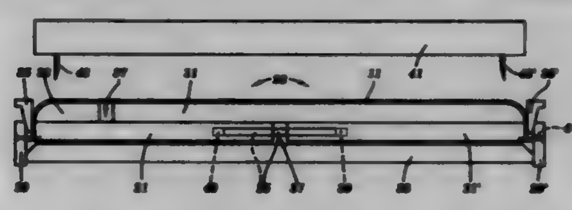

1. An apparatus for supporting a strip of non-metallic magnetizable material for cutting of a non-metallic magnetic component from said strip using a cutter, said apparatus comprising:
a pair of blocks placed in juxtaposed position to form a support frame having a predetermined length;
means for securing each end of the strip of non-metallic magnetizable material placed on the support frame to each one of said blocks;
means for moving said blocks to extend the length of the support frame wherein the length of the strip of non-metallic magnetizable material placed on the support frame and secured to said blocks is stretched to a desired length and cut; and
means for maintaining the blocks aligned along an axis extending the length of the support frame when said blocks are moved and said support frame length is extended;
wherein the means for maintaining the blocks aligned along an axis comprises at least one pin, each end of said at least one pin being inserted within a bore in each of said blocks, said bores of said blocks being coaxially aligned to form a coaxial cavity.
9. A method of cutting a non-metallic magnetic component from a strip of non-metallic magnetizable material comprising:
determining a desired length of said component;
securing each end of said strip of non-metallic magnetizable material on a respective one of a pair of blocks placed in juxtaposed position to form a support frame of predetermined length, a segment of said strip of non-metallic magnetizable material having a length equal to said desired length of said component;
stretching said strip of non-metallic magnetizable material by moving said blocks to extend the length of the support frame such that said segment of said strip having said desired length of said component is expanded to a length equal to a desired whole number of units corresponding in length to magnetic poles of a predetermined length; and
cutting the expanded segment from the strip of non-metallic magnetizable material.

5,699,707
HIGH SPEED SHEET MATERIAL CUTTER AND METHOD OF USING SAME
Robert L. Campbell, Jr., Hickory, N.C., assignor to Automated Solutions, LLC, Hickory, N.C.
Filed Feb. 1, 1995, Ser. No. 381,739
Int. Cl.[6] B26D *7/20*
U.S. Cl. 83—100 8 Claims

1. A machine for cutting soft sheet material such as textile fabric comprising:
a cutting table having a support surface containing a plurality of openings distributed thereover;
a vacuum source connected to said cutting table and in communication with the openings in said cutting table;
an endless conveyor having a predetermined air permeability overlaying and movable relative to said support surface for moving the sheet material;
a cutting tool supported on said cutting table above said endless conveyor, said cutting tool having a downwardly directed sharp edge for engagement with the sheet material; and
an endless support belt overlying said conveyor for supporting the sheet material below said cutting tool, said support belt having a predetermined air permeability lower than the air permeability of said conveyor for being retained on said conveyor for movement therewith and for retaining the sheet material in a relatively fixed position on said support belt during transporting and cutting of the sheet material, said support belt further having a tough engagement surface against which the sharp edge of said cutting tool is engaged without causing substantial downward deformation of said support belt so that the sheet material is cut by the sharp edge of said cutting tool.

5,699,708
PUNCH PRESS DEVICE
Frank Deni, Williamsville; Joseph A. Deni, and Leonard A. Deni, both of E. Amherst, all of N.Y., assignors to Unittool Punch & Die Company, Buffalo, N.Y.
Filed Aug. 28, 1995, Ser. No. 520,293
Int. Cl.⁶ B23D *21/14;* **B26F** *1/14*
U.S. Cl. 83—180 **5 Claims**

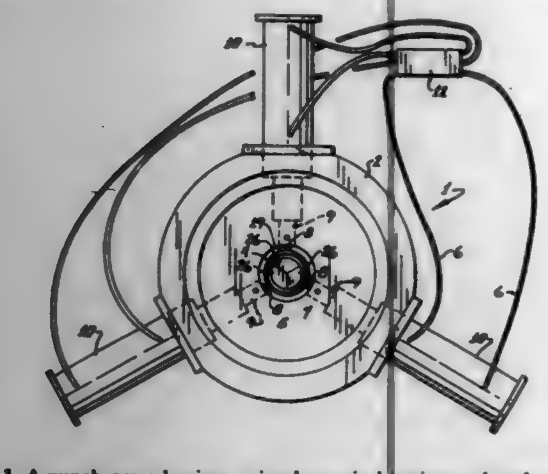

1. A punch press having a circular main housing and a plurality of air cylinders connected to said main housing, said main housing having at a central portion thereof a centrally disposed workpiece support section having a central core around which a tubular workpiece will fit, said air cylinders housing a plurality of punches having hydraulic means to impel said plurality of punches simultaneously forward upon demand toward said central core, said air cylinders having a first open terminal surface permitting a punch to pass therethrough and a second terminal surface connected to a source of air and an air pressure control means, said first open terminal surface being adjacent to a source of air and an air pressure control means, said first open terminal surface being adjacent said workpiece support section to provide means for said punches to substantially simultaneously contact said tubular workpiece which is supported in said workpiece support section, and wherein said centrally disposed workpiece support has a core means for said workpiece to fit tightly around, said core means comprising a plurality of sector-shaped movable wedge sections each of which having an inner edge, said wedges being movable from a first position to a second position, said inner edges meeting together along a central axis when at said first position, said wedges being movable to said second position by pushing a mandrel therebetween to outwardly separate said wedges and fit them tightly against a workpiece, said mandrel having removing means to withdraw said mandrel from said wedges to thereby loosen said workpiece after it has been impressed wherein said sector-shaped movable wedge sections have apertures each aligned with an adjacent punch to permit said punch to fit therein after an impression is made in said tubular workpiece.

5,699,709
DEVICE FOR SEVERING PACKING STRIPS HAVING BLISTERS FROM A CONTINUOUS FILM
Horst Scheifele, Stuttgart; Eberhard Krieger, Weinstadt; Ulrich Heinisch, Stuttgart, and Siegfried Wentsch, Winnenden, all of Germany, assignors to Robert Bosch GmbH, Stuttgart, Germany
PCT No. PCT/DE94/01213, § 371 Date Jun. 7, 1995, § 102(e) Date Jun. 7, 1995, PCT Pub. No. WO95/11783, PCT Pub. Date May 4, 1995
PCT Filed Oct. 14, 1994, Ser. No. 448,598
Claims priority, application German Dem. Rep., Oct. 29, 1993, 43 37 029.2
Int. Cl.⁶ B26D *7/01*
U.S. Cl. 83—236 **15 Claims**

1. A device for severing packing strips (11) having blisters (10) from a continuous film (12), having an advance device (15) that

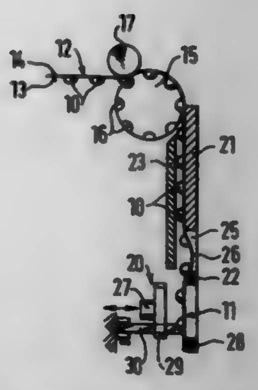

conveys the continuous film (12) step by step by at least a width of a packing strip (11), and having a severing tool (20) having a continuous outer cutting edge that determines an outer contour of the packaging strip (22) and adjoining at a specific distance in a conveying direction, a stop (30) is arranged in a covering region of the severing tool (20) and positioned to abut at least one blister (10) of the packing strip (11) to be severed, and wherein the stop (30) penetrates a cutout (29) in the severing tool (20), said cutout being within the bounds of said continuous outer cutting edge, said stop being parallel to a direction of motion of the severing tool.

5,699,710
SLOTTER WHEEL MECHANISM HAVING SELECTIVELY ROTATABLE SLOTTER BLADE
David E. Creaden, Lawrence, Kans., assignor to Lawrence Paper Company, Lawrence, Kans.
Continuation of Ser. No. 513,385, Aug. 10, 1995, abandoned.
This application Apr. 22, 1997, Ser. No. 837,659
Int. Cl.⁶ B26D *1/12;* **B31B** *1/14*
U.S. Cl. 83—332 **29 Claims**

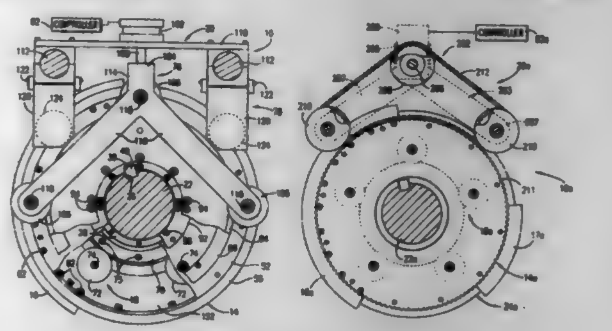

1. A slotter wheel apparatus for slotting box blanks at selectively variable locations along the length of the blanks as the blanks are transported along a path of movement through the apparatus, said slotter wheel apparatus comprising:

a rotatable drive assembly including an elongated rotatable drive shaft extending in a direction generally transverse to the path of movement of the blanks, said shaft presenting a longitudinal axis;
at least one slotter blade presenting a cutting edge;
blade support means for supporting said slotter blade on the drive assembly for rotation about the longitudinal axis of said drive shaft; and
blade coupling means for selectively coupling said slotter blade with said drive assembly so that said slotter blade is rotated by said drive shaft through the path of movement of the blanks, and for selectively decoupling said slotter blade from said drive assembly for rotation of said drive shaft relative to said slotter blade for preventing said slotter blade from rotating through the path of movement of the blanks during continued rotation of said drive shaft,
said blade coupling means including structure for effecting said coupling and decoupling without stopping the rotation of said drive assembly and during passage of said blanks through the apparatus, and for selective rotation of said drive shaft through a full 360 degrees of rotation relative to the decoupled balde.

5,699,711
SAW GUIDE
Laurence H. Gold, Takoma Park, Md., assignor to Kidshop, Inc., Takoma Park, Md.
Filed Apr. 22, 1996, Ser. No. 636,793
Int. Cl.⁶ B26D *7/04;* **B27B** *11/00*
U.S. Cl. 83—743 **14 Claims**

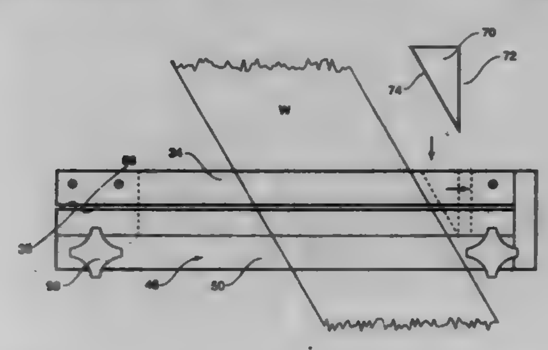

1. A saw guiding device which enables a user to hold and cut a flat object, such as a board, along a straight line, comprising:

a base having a saw blade receiving slot extending longitudinally through one end thereof, dividing said base into a first section and a second section on opposite sides of said slot;
a fixed guide attached at opposite ends to said first section of said base and having a central portion spaced above said base to form an object receiving cavity between said base and said fixed guide, said object receiving cavity of fixed size;
an adjustable guide having a central portion and depending portions at the ends thereof;
said adjustable guide being positioned above said second section of said base, with the space between said central portion and said second section of said base defining an adjustable cavity of adjustable size;
said fixed guide and said adjustable guide being positioned in spaced juxtaposition to each other on opposite sides of said slot, having a space between them which is aligned along and above said slot;
wherein said slot and said space between said fixed guide and said adjustable guide, extends completely through said one end of said base to a point on said opposite end of said base, providing an opening for a saw blade to pass longitudinally through said one end via said slot; and
digitally operable adjusting means mounted within said depending portions of said adjustable guide and engageable with said second section of said base;
said device being operable by inserting an object to be cut through said object receiving cavity and said adjustable cavity, positioning the object with the area to be cut aligned along and above said slot, operating the adjusting means to lower the adjustable guide until the central portion thereof abuts against the object and holds it in place, and then inserting a saw blade through said space and said slot to enable the user to cut the object along a straight line.

5,699,712
ROTATABLE SIDE SAW FOR TREE PROCESSING APPARATUS
Thomas H. Hudson, Hueytown, Ala., assignor to Timberjack Corporation, Hueytown, Ala.
Filed Aug. 26, 1996, Ser. No. 697,535
Int. Cl.⁶ A01G *23/08*
U.S. Cl. 83—928 **10 Claims**

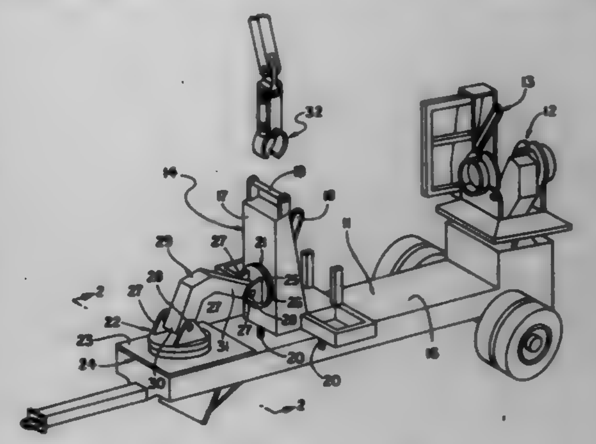

6. An apparatus for bucking trees to a desired length, comprising:

a) a side saw assembly;
b) a trailer, having an upper surface, a first side and a second side; and
c) connecting means for rotatably and pivotally connecting said side saw assembly to said trailer such that said side saw assembly is selectively movable between a transport position adjacent said upper surface of said mounting platform, a first ground position proximal said first side of said mounting platform and a second ground position proximal said second side of said mounting platform.

5,699,713
BRAKE BOOSTER
Ivan Mortimer, Solihull, United Kingdom, assignor to Lucas Industries plc, England
PCT No. PCT/GB94/01408, § 371 Date Jun. 20, 1996, § 102(e) Date Jun. 20, 1996, PCT Pub. No. WO95/01272, PCT Pub. Date Jan. 12, 1995
PCT Filed Jun. 29, 1994, Ser. No. 569,254
Claims priority, application United Kingdom, Jul. 1, 1993, 9313612
Int. Cl.⁶ F15B *9/10*
U.S. Cl. 91—369.2 **17 Claims**

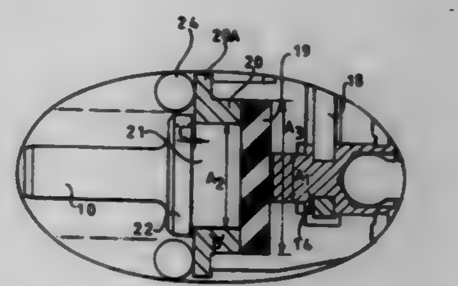

1. A brake booster comprising a fluid-actuated servo piston to which the supply of working fluid is controlled by a valve mechanism actuated under the influence of a driver-operated force input member, the input member acting via a force transmission assembly on an output member arranged, in use, to provide power assisted input to a master cylinder, the force transmission assembly including a reaction element and providing surfaces through which

force is transmitted between the input and output members and of which operative input and output areas define a boost ratio, and yieldable means arranged to yield under a predetermined transmitted force to permit movement of at least one part of the force transmission assembly in order to cause a change in the ratio of the operative surface areas in a manner to increase the boost ratio.

5,699,714
ADJUSTING SWITCHING DEVICE
Rudiger Jung, St. Ingbert, and Harald Bär, Volklingen, both of Germany, assignors to Flutec Fluidtechnische Gerate GmbH, Sulzbach/Saar, Germany
Filed Mar. 13, 1996, Ser. No. 614,895
Claims priority, application Germany, Mar. 29, 1995, 195 11 522.8
Int. Cl.⁶ F15B *11/08*
U.S. Cl. 91—439 **11 Claims**

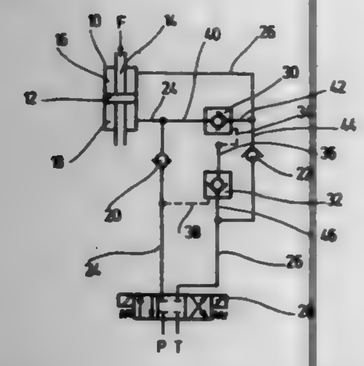

1. A switching device for controlling a hydraulically operated apparatus, comprising:
a feed conduit having a first check valve therein;
a discharge conduit having a second check valve therein;
at least one hydraulically operated apparatus connected to said feed conduit and said discharge conduit, said hydraulically operated apparatus being a double acting hydraulic cylinder having a piston rod and first and second work chambers coupled to said feed conduit and said discharge conduit, respectively;
a pilot valve connected to said feed conduit and said discharge conduit; and
first and second openable, nonreturn valves connected in parallel to said first and second check valves, each of said nonreturn valves having a control conduit, a flowthrough connection, and a blocking connection, said control conduit of said first nonreturn valve being connected to said blocking connection of said second nonreturn valve, said control conduit of said second nonreturn valve being connected to and opening into said feed conduit between said pilot valve and said first check valve, said blocking connection of said first nonreturn valve being connected to and opening into said feed conduit in a direction of fluid flow and between said first check valve and said hydraulic cylinder.

5,699,715
PISTON FOR A RECIPROCATING PISTON MACHINE
Franz Forster, Karlstadt-Mühlbach, Germany, assignor to Linde Aktiengesellschaft, Germany
Filed Jul. 22, 1996, Ser. No. 681,271
Claims priority, application Germany, Jul. 28, 1995, 195 27 648.5
Int. Cl.⁶ F01B *3/00*
U.S. Cl. 92—12.2 **20 Claims**

1. A piston for use in a reciprocating piston machine having a wobble plate, said piston having a first piston segment and a second piston segment axially spaced from and aligned with said

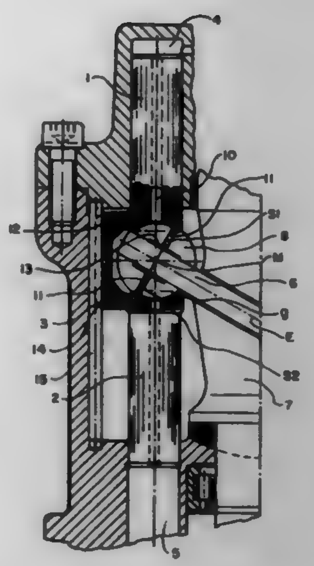

first piston segment, a bridge segment connecting said first and second piston segments for simultaneous reciprocal movement, and a means for operatively connecting said piston to a wobble plate, whereby a relative velocity perpendicular to the center axis of said piston and tangential to a wobble plate occurs between said piston and said wobble plate during reciprocal movement of said piston, wherein said means for operatively connecting said piston to said wobble plate includes a cavity in said bridge segment and two support bodies mounted within said cavity in said bridge segment which are adapted to lie on opposed sides of said wobble plate wherein each of said two support bodies mounted in said bridge segment is a segment of a sphere and said segments have coaxial mean perpendiculars wherein said piston has opposed ends for one of the displacement of a pressure medium and the pressurization of a pressure medium.

14. A piston for use in a reciprocating piston machine having a wobble plate, said piston having a first piston segment and a second piston segment axially spaced from and aligned with said first piston segment, a bridge segment connecting said first and second piston segments for simultaneously reciprocal movement, and means for operatively connecting said piston to said wobble plate, said means including a cavity in said bridge segment and two support bodies mounted within said cavity in said bridge segment and adapted to lie on opposite sides of said wobble plate, pressure pockets formed in said bridge segment adjacent each said support body creating hydrostatic bearings on a surface of each said support body within said bridge segment, and a pressure pocket formed on a surface of each said support body facing said wobble plate whereby a hydrostatic bearing is formed between said support bodies and said wobble plate, whereby a relative velocity perpendicular to the center axis of said piston and tangential to a wobble plate occurs between said piston and said wobble plate during reciprocal movement of said piston.

5,699,716
SWASH PLATE-TYPE VARIABLE DISPLACEMENT COMPRESSOR
Masaki Ota; Youichi Okadome; Hisakazu Kobayashi, and Masaru Hamasaki, all of Kariya, Japan, assignors to Kabushiki Kaisha Toyoda Jidoshokki Seisakusho, Kariya, Japan
Filed Jun. 4, 1996, Ser. No. 668,424
Claims priority, application Japan, Jun. 8, 1995, 7-142096
Int. Cl.⁶ F01B *13/04*
U.S. Cl. 92—12.2 **16 Claims**

1. A variable displacement type compressor comprising:
a housing;
a rotary shaft supported in said housing;

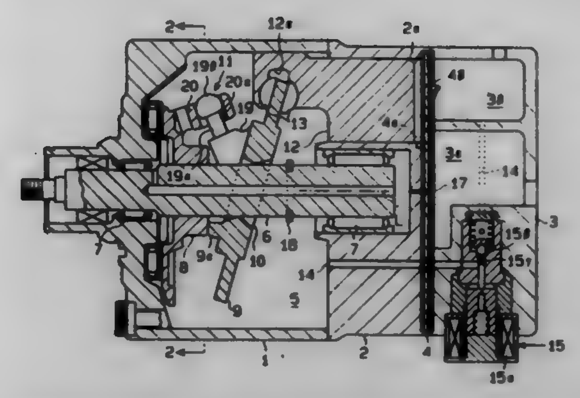

a swash plate having a through hole through which said rotary shaft is inserted such that said swash plate is adapted to move so that it inclines with respect to said rotary shaft;
the inner diameter of said through hole being everywhere larger than the outer diameter of at least that portion of said rotary shaft that is located within said through hole;
a lug plate mounted on said rotary shaft;
a hinge mechanism located between said lug plate and said swash plate for guiding said inclining movement of said swash plate; and
a piston connected to said swash plate for reciprocating in said housing, said piston serving to draw, compress and discharge a refrigerant gas, wherein the displacement of said refrigerant gas varies with adjustment of the inclined angle of said swash plate;
wherein said swash plate is connected through said lug plate to said rotary shaft at at least two points of said hinge mechanism and wherein said swash plate contacts said rotary shaft at a single contact point located on the inner surface of said through hole of said swash plate.

5,699,717
DIAPHRAGM PUMP WITH SHAPED DIAPHRAGM HAVING RADIALLY AND CIRCUMFERENTIALLY EXTENDING RIBS
Heinz Riedlinger, Freiburg, Germany, assignor to KNF Neuberger GmbH, Freiburg, Germany
Filed Mar. 20, 1996, Ser. No. 618,959
Claims priority, application Germany, Mar. 24, 1995, 195 10 828.0
Int. Cl.⁶ F01B *19/00*
U.S. Cl. 92—98 R **14 Claims**

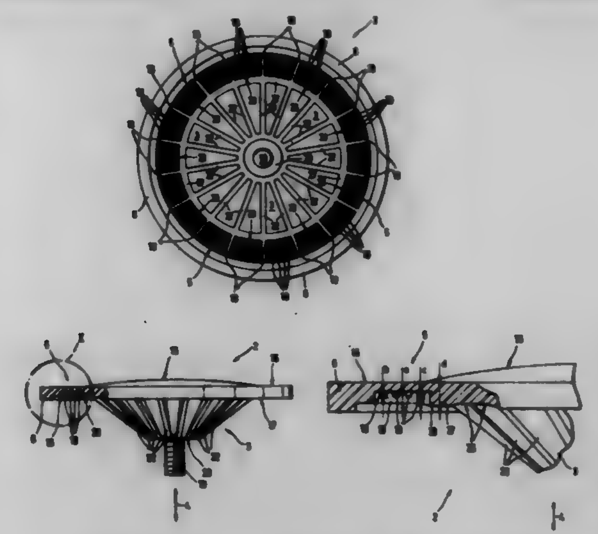

1. A diaphragm pump (1) comprising a shaped diaphragm (2) of elastic material located in a pump case having a pumping chamber with a wall adjacent to the shaped diaphragm (2), the shaped diaphragm (2) including a central zone (3) which is thickened in a direction of stroke (4) of the diaphragm pump (1), a flexible annular zone (5) surrounding the central zone (3), an external clamping edge (6) connected to the flexible annular zone (5), the external clamping edge (6) being attached to the pump case, an upper surface (15) of the shaped diaphragm facing the adjacent wall, and an underside (17) of the shaped diaphragm facing away from the pumping chamber, a connecting rod (11) acting on the central zone of the shaped diaphragm (2) to displace the diaphragm from a top dead-center position to a bottom dead-center position and vice versa, wherein the central zone (3) of the upper surface (15) of the diaphragm facing the pumping chamber (16) and the adjacent wall (14) of the pumping chamber are geometrically adapted to each other, and at least the annular zone (5) of the underside (17) of the diaphragm facing away from the pumping chamber (16) is provided with radial ribs (18) for stabilization, and at least one stabilizing rib (19) running substantially in a circumferential direction is arranged at the underside (17) of the annular zone (5) between adjacent radial ribs (18).

5,699,718
COFFEE MAKING MACHINES
Jimmy Siu Yim Yung, and John Duncan McNair, both of Hong Kong, Hong Kong, assignors to Chiaphua Industries Limited, New Territories, Hong Kong
Filed Aug. 22, 1996, Ser. No. 697,333
Int. Cl.⁶ A47J *31/30;31/24*
U.S. Cl. 99—292 **6 Claims**

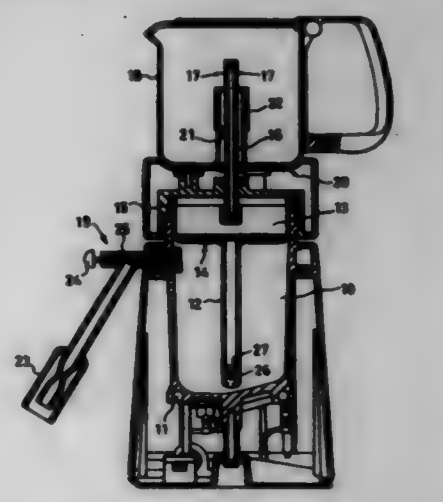

1. An expresso coffee maker comprising an electrically heated sealed water compartment, a tube, having two ends, extending down inside the compartment and terminating at one end adjacent a lower inner surface of the water compartment, a coffee compartment connected to the other end of the tube and having an outlet connected to pass coffee to an external container, including automatic valve means arranged to seal off the tube before all the water in compartment has evaporated so as to form a supply for steam for frothing milk, and a manually operable valve arranged to release the steam from the compartment to a frothing nozzle connected to the valve.

5,699,719
THERMAL CARAFE BREWING DEVICE WITH BREW-THROUGH LID
Eric E. Lucas, Bedford Heights; Marc L. Vitantonio, S. Russell, and Michael Mirozwski, Seven Hills, all of Ohio, assignors to Healthometer, Inc., Bedford Hts., Ohio
Filed Nov. 21, 1995, Ser. No. 561,012
Int. Cl.⁶ A47J *31/00*
U.S. Cl. 99—299 **29 Claims**

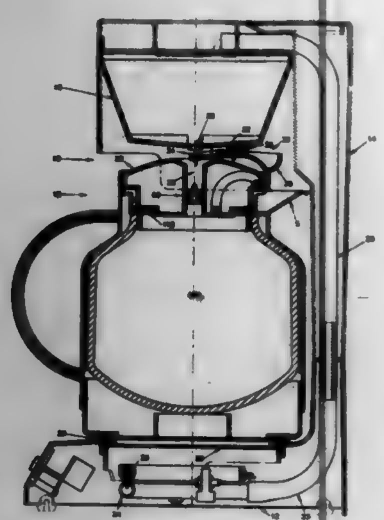

1. A thermally insulated brewing device comprising a thermal carafe adapted to receive and dispense brewed beverage and dimensioned to be arrangeable with an automatic drip brewing structure, the automatic drip brewing structure having a base for receiving the thermal carafe, a water reservoir for holding brewing water, a heated water distributor structure and brewing basket, a heating and pumping element for heating water from the water reservoir and pumping heated water to the heated water distributor structure, the thermal carafe having an internal cavity for receiving brewed beverage, insulated walls and an insulated lid; the insulated lid having a liquid passageway through which brewed beverage enters the carafe, the lid further comprising a pressure controlled valve in association with the liquid passageway operative to allow brewed beverage to flow into the carafe through the liquid passageway and to prevent liquid from exiting the carafe through the liquid passageway.

5,699,720
CORN POPPING KETTLE ASSEMBLY
Andrew M. Stein, Massapequa Park, and Andrew Jinks, Amityville, both of N.Y., assignors to Six Corners Development Company, Amityville, N.Y.
Continuation of Ser. No. 328,325, Oct. 24, 1994, Pat. No. 5,555,792. This application Aug. 21, 1996, Ser. No. 697,224
Int. Cl.⁶ A23L *1/18*
U.S. Cl. 99—323.9 **12 Claims**

1. A kettle assembly for popping corn comprising:
a bowl including a base member, at least one sidewall and an open top;
a pivot axle having first and second ends, wherein the base member includes dependent leg members for accepting the pivot axle, with the leg and base members being configured and dimensioned to allow the bowl to pivot
a cylinder and piston arrangement; and
a housing for supporting the bowl and base member;

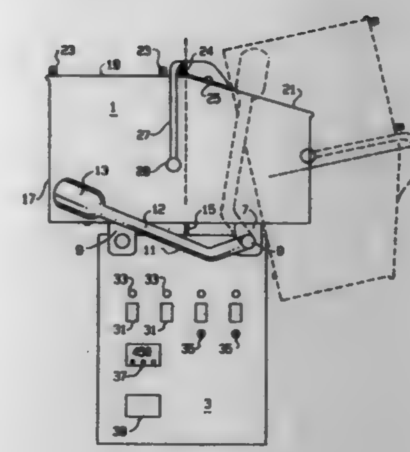

wherein one end of the cylinder and piston arrangement is operatively associated with the base member and the other end is mounted on the housing.

5,699,721
EGG COOKER
Peter Funke, Sundern, Germany, assignor to Gebruder Funke KG, Sundern, Germany
Filed Jan. 17, 1997, Ser. No. 786,093
Claims priority, application Germany, Feb. 23, 1996, 296 03 112.7
Int. Cl.⁶ A47J *29/02*
U.S. Cl. 99—336 **11 Claims**

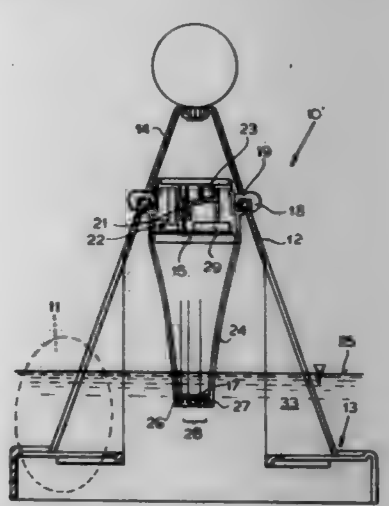

1. An egg cooker comprising:
a holder forming at least one egg seat and adapted to be set in a body of water with an egg in the seat at least partially below a level of the water;
a temperature sensor on the body for detecting a temperature of the body of water;
an acoustic emitter on the body capable of emitting an audible signal; and
circuit means including a timer and connected to the sensor and emitter for starting the timer when the sensor detects a predetermined elevated water temperature and for emitting a first audible signal at a predetermined interval after the timer is started and a second audible signal different from the first signal at a predetermined interval after the first signal.

5,699,722
RAPID COOKING DEVICE
Chad Erickson, 5450 Ximines, Plymouth, Minn. 55442; David Dornbush, 15346 Fish Point Rd., Prior Lake, Minn. 55372, and John Flom, 3213 Holmes Ave. So., Minneapolis, Minn. 55408
Continuation of Ser. No. 485,231, Jun. 7, 1995, abandoned, which is a division of Ser. No. 407,189, Mar. 21, 1995, Pat. No. 5,465,651, which is a continuation of Ser. No. 13,709, Feb. 4, 1993, Pat. No. 5,403,607, which is a division of Ser. No. 902,531, Jun. 22, 1992, abandoned, which is a continuation of Ser. No. 325,157, Mar. 17, 1989, abandoned. This application Dec. 8, 1995, Ser. No. 569,370
Int. Cl.⁶ A47J *27/00;* **A23L** *1/00*
U.S. Cl. 99—330 **13 Claims**

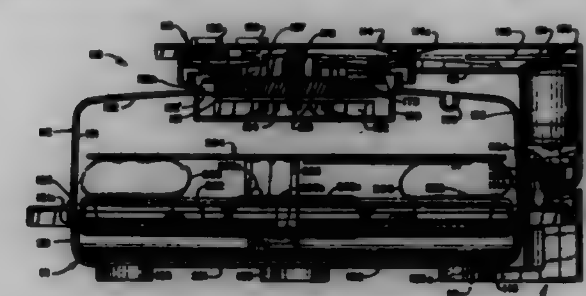

1. A device for rapidly cooking food, comprising:
an upper enclosure member and a lower enclosure member, the lower enclosure member comprising a circumferential side wall and an interconnected lower wall, wherein the upper and lower enclosure members form a cooking chamber;
air-moving means for moving air inside the cooking chamber;
heating means for heating the air inside the cooking chamber;
a food rack located inside the cooking chamber for supporting the food; and
a base liner for catching droppings from the food during cooking, the base liner comprising a bottom wall and an outwardly extending flange, wherein the circumferential wall of the lower enclosure member removably supports the outwardly extending flange of the base liner such that the bottom wall of the base liner is below the food rack and above the lower wall of the lower enclosure member, thereby defining an air space between the bottom wall of the base liner and the lower wall of the lower enclosure member.

5,699,723
DEVICE FOR MAKING SAUSAGES
Gerhard Schliesser, Wain, and Karl Burger, Ingoldingen-Muttensweiler, both of Germany, assignors to Albert Handtmann Maschinenfabrik GmbH & Co. KG, Biberach, Germany
Filed May 13, 1996, Ser. No. 645,176
Claims priority, application Germany, May 18, 1995, 295 08 293 U
Int. Cl.⁶ A23B *4/044;* **A22C** *11/12*
U.S. Cl. 99—443 C **5 Claims**

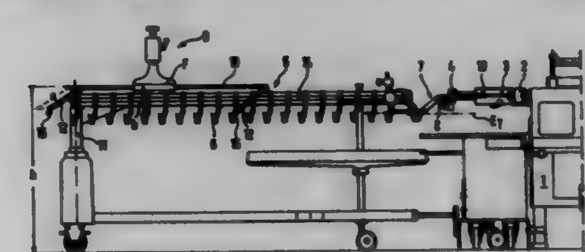

1. A device for supplying sausage strings made coherently in chains to a smoke stick, comprising a transportation device including rotating transportation hooks to which the sausages are transferred from a portioning machine (1), and a closing device (9) for clipping the beginning and end of a skin length or right and left of a place where the skin has been damaged is arranged on said transportation device (5), said closing device being movably supported at least over part of the longitudinal extension of said transportation device.

5,699,724
CLEANING AND SORTING BULK MATERIAL
Arthur Wettstein, Oberuzwil, and Gilbert Moret, Henau, both of Switzerland, assignors to Bühler AG, Uzwil, Switzerland
Division of Ser. No. 653,103, May 24, 1996, which is a continuation of Ser. No. 160,497, Dec. 1, 1993, abandoned. This application Aug. 9, 1996, Ser. No. 694,675
Claims priority, application Switzerland, Dec. 2, 1992, 03 701/92; Germany, Mar. 4, 1993, 43 06 703.4
Int. Cl.⁶ B02B *3/00;3/02;* **A23N** *5/00*
U.S. Cl. 99—489 **29 Claims**

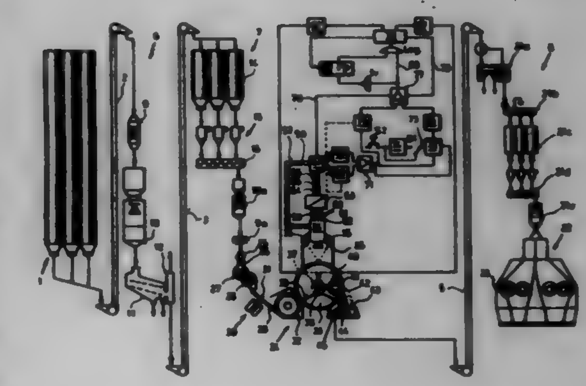

1. A facility for treating particulate food material containing impurities comprising
a precleaning section for precleaning said food material by removing impurities which differ distinctly from said particulate food material,
a first cleaning section for selecting impurities from the precleaned food material comprising at least one optical sorting system including
optical detecting means for detecting at least one characteristic property of the group of color, size and shape of the particles of said food material, said detecting means being mounted facing a passage area where said material is passing by in a flow direction,
comparator means for comparing said detected characteristic with characteristics of acceptable food particles, said comparator means being connected to said detecting means, and
partitioning means for partitioning said food material at least in impurities and acceptable food particles, said partitioning means being connected to said comparator means.

5,699,725
SYSTEM FOR PREPARING BAKED APPLES AND OTHER EDIBLE FRUITS AND VEGETABLES
Neris Poltielov, 105-05 69th Ave., apt. 114, Forest Hills, N.Y. 11375
Filed May 20, 1996, Ser. No. 650,177
Int. Cl.⁶ A23N *3/00*
U.S. Cl. 99—494 **20 Claims**

1. A system for preparing baked apples and other edible fruits and vegetables which comprises:
a) means for coring through a top of an apple and into a core thereof to remove the core with its seeds, so as to form a hole therein; and

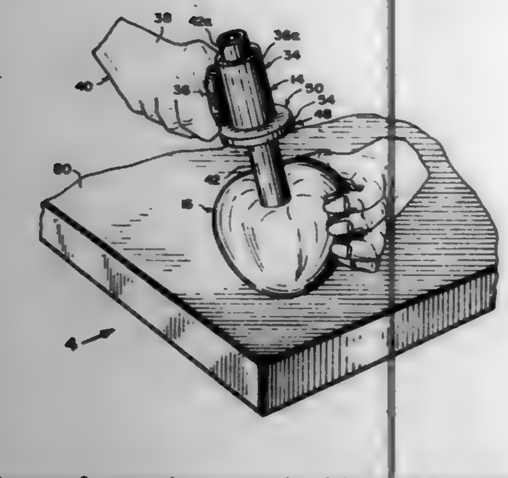

b) means for removing some pulp of the apple from within the hole, so as to form an expanded chamber therein with a top inlet port, in which a prepared sweet food mass filler can be inserted past the top inlet port and into the expanded chamber, a food topping placed thereon and the apple baked.

5,699,726
CONTINUOUS SOAKING SYSTEM
Rajendra P. Gupta, 9 Veery Lane, Ottawa, Ontario, Canada, K1J 8X4
Filed Jun. 17, 1996, Ser. No. 664,562
Int. Cl.⁶ A23B *4/08;* **B02B** *3/12*
U.S. Cl. 99—516 **14 Claims**

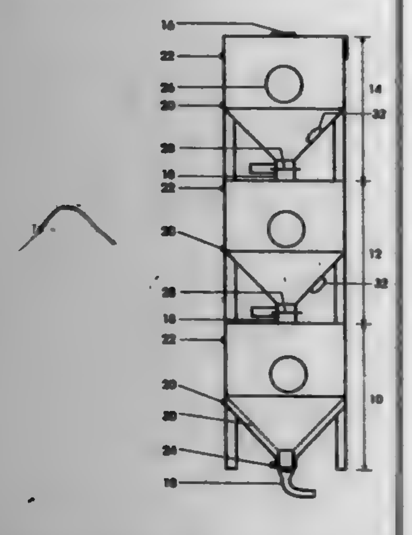

1. A counterflow soaking system for soaking solids in a liquid in a substantially continuous manner comprising:
more than one similar containers stacked one upon the other for holding the solids therein;
each container comprising;
an inlet at the top portion thereof for feeding the solid therein;
an outlet at the bottom portion thereof for extracting the soaked solids therefrom;
a liquid inlet at the bottom portion thereof for feeding the liquid into the container under pressure; and
a liquid outlet at the top portion thereof for removing the liquid therefrom;
and
a perforated valve provided between two adjacent containers and connecting the outlet of an upper container with the inlet of the container immediately below it.

5,699,727
METHOD OF MANUALLY TYING BALES IN WASTE MATERIAL PRESSES
Hermann Schwelling, Hartmannweg 5, 88682 Salem, Germany
Filed Dec. 21, 1995, Ser. No. 576,804
Claims priority, application Germany, Dec. 24, 1994, 44 46 748.6
Int. Cl.⁶ B65B *27/12;* **B30B** *9/30*
U.S. Cl. 100—3 **1 Claim**

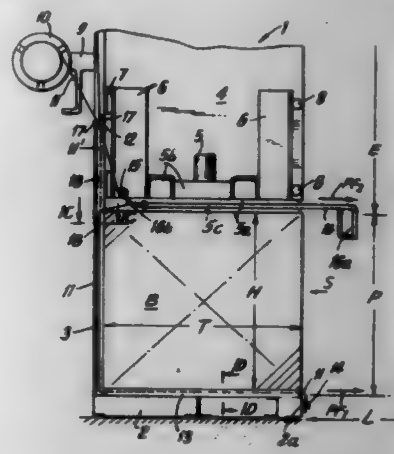

1. In a method of manually tying bales of used packaging materials produced in a waste material press of upright construction, the press having a press chamber formed by a rear wall, side walls and front doors, and a pressure ram movable in the press chamber, the press chamber having a base, the method including initially pulling a binding wire from a supply roll at a rear side of the press, moving the binding wire along inner sides of the rear wall and along the base into a pressing chamber portion which is still empty and fastening the binding wire to a front side of the base, and, after a bale has been produced and the front doors of the press have been opened, pulling the binding wire by means of a pulling needle having a hook-shaped free end through a downwardly open groove in a bottom surface of the pressure ram away from the rear wall toward the front, and tying the binding wire pulled by the pulling needle to a free end of the binding wire secured previously to the base prior to pressing, the improvement comprising separating the free end of the binding wire from the front side of the base and pulling out a free length of wire slightly exceeding a length of the dimensions of bale height plus bale depth, grasping the binding wire extending in a vertical groove of the rear wall of the press by the hook-shaped free end of the pulling needle, pulling the resulting loop of binding wire by the needle through the groove in the bottom of the pressure ram into a position located in front of the finished bale, separating the wire loop in the pulled-out position, and swinging upwardly a remaining length of wire at the bottom and tying together the two free ends of the binding wire.

5,699,728
WASTE FOOD TREATMENT APPARATUS
Chen-Hsien Huang, No. 3-2, Lane 8, Alley 47, Hsen-Fu Street, Shu-Lin Town, Taipei Hsien, Taiwan
Filed Aug. 7, 1996, Ser. No. 698,159
Int. Cl.⁶ B30B *9/14*
U.S. Cl. 100—98 R **2 Claims**

1. A waste food treatment apparatus comprising a motor unit, a container covered on said motor unit, a spindle turned by said motor unit, a screw rod disposed in said container and coupled to said spindle and having a spiral blade raised around the periphery and being turned to squeeze water out of waste food being put in said container, a scraper turned by said spindle to scrape out food dregs, and a food dreg propelling mechanism controlled to propel food dregs, permitting food dregs to be scraped out by said scraper,

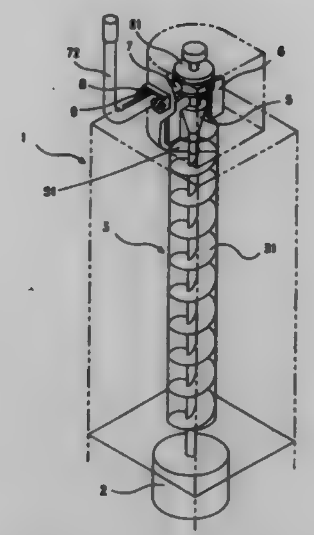

wherein said food dreg propelling mechanism comprises a food dreg propelling block fixedly secured to said scraper at the bottom and spaced above the spiral blade of said screw rod and having an outward propelling flange raised around the periphery, a circular block fixedly secured to said scraper at the top and coupled to said spindle, said circular block comprising a longitudinal center through hole extending through said scraper and said food dreg propelling block, at least one longitudinal coupling groove extending through said scraper and said food dreg propelling block and longitudinally disposed in communication with said longitudinal center through hole at one side along its length, and an annular groove around the periphery, a handle holder fixedly secured to said container and having a horizontal pivot, and a substantially L-shaped handle turned about the horizontal pivot of said handle holder and adapted for lifting said circular block, said scraper, and said food dreg propelling block for permitting food dregs to be scraped out by said scraper and said food dreg propelling block, said handle having one end extending out of said container through a hole thereof and an opposite end terminating in a coupling fork coupled to the annular groove of said circular block by ball bearings for permitting said circular block to be turned by said spindle relative to said coupling fork; said screw rod has a longitudinal center through hole and at least one longitudinal coupling groove disposed in communication with the longitudinal center through hole of said screw rod at one side along its length; said spindle has at least one longitudinal coupling rib raised from the periphery along the length and respectively engaged with the at least one longitudinal coupling groove of said screw rod and the at least one longitudinal coupling groove of said circular block to stop said screw rod and said circular block and said scraper and said food dreg propelling block from rotary motion relative to said spindle, for permitting said circular block and said scraper and said food dreg propelling block to be moved axially along said spindle.

5,699,729
ROLL HAVING MEANS FOR DETERMINING PRESSURE DISTRIBUTION
Charles Moschel, Stephens City, Va., assignor to Stowe Woodward Company, Middletown, Va.
Continuation of Ser. No. 308,080, Sep. 16, 1994, Pat. No. 5,592,875. This application Sep. 30, 1996, Ser. No. 723,523
Int. Cl.⁶ B30B *3/04*
U.S. Cl. 100—99 **15 Claims**

1. A system for sensing pressure in a press nip comprising:
a first roll configured with a second roll in a press nip, said first roll and said second roll adapted to rotatingly press matter therebetween, said first roll comprising at least one optical sensor disposed in a continuous helical configuration around said first roll for sensing pressure exhibited on said first roll and for providing a pressure signal representative thereof;

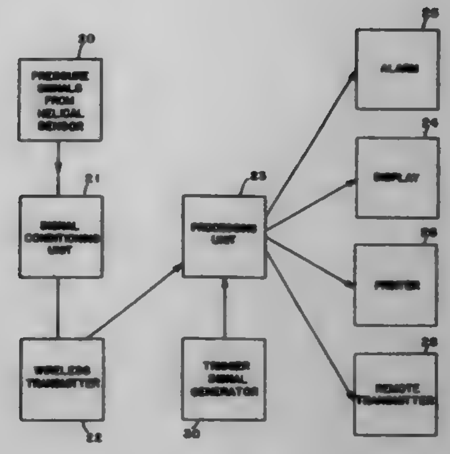

a processing unit for processing said pressure signal; and
a peripheral device for providing an indication of pressure distribution, coupled to said processing unit, wherein said peripheral device signals non-uniform pressure distributions thus evidencing an operating malfunction.

5,699,730
BAG SQUEEZER
Ray Ogier, Milton, and Garry O'Donnell, Oakville, both of Canada, assignors to Chem Financial, Inc., Ontario, Canada
Filed Apr. 10, 1996, Ser. No. 630,785
Int. Cl.⁶ B30B *7/04*
U.S. Cl. 100—233 **15 Claims**

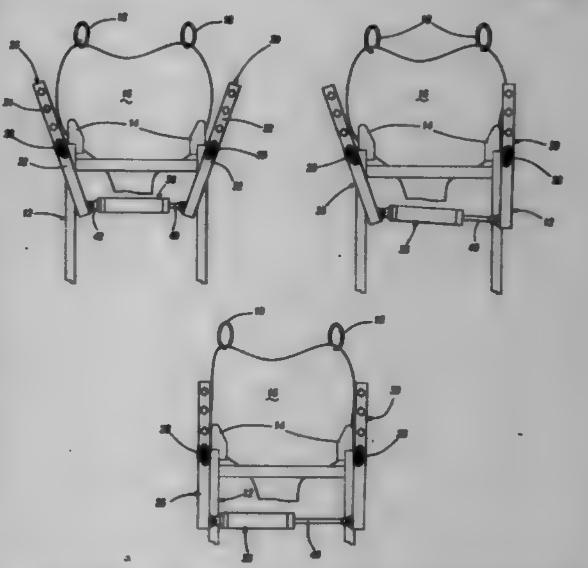

1. A bag squeezing apparatus for facilitating break-up of material in a bag for gravity delivery of the material from the bag comprising:
a frame;
a bag support mounted to said frame having at least two ears for supporting said bag over a center opening, said at least two ears spaced apart on opposite sides of said center opening;
a pair of jaw members mounted to said frame, said jaw members pivotable about one of a respective pair of spaced parallel horizontal axes, said at least two ears of said bag support and said center opening being disposed between said pair of horizontal axes; and
a motor attached to each jaw member to independently pivot working ends of the jaw members toward each other to impact said bag on opposite sides, said motor is attached to said jaw members in a manner to sequentially impact a working end of

one of said pair of jaw members against one side of said bag at a position above said bag support and then to impact a working end of the other of said pair of jaw members against an opposite side of said bag at a position above said bag support.

5,699,731
INK-SUPPLY CONTROL DEVICE AND STENCIL PRINTING MACHINE HAVING THE SAME
Yoshikazu Hara, Ibaraki, Japan, assignor to Riso Kagaku Corporation, Tokyo, Japan
Filed Jul. 26, 1996, Ser. No. 687,949
Claims priority, application Japan, Jul. 28, 1995, 7-193374
Int. Cl.⁶ B41F *15/40*
U.S. Cl. 101—119 **29 Claims**

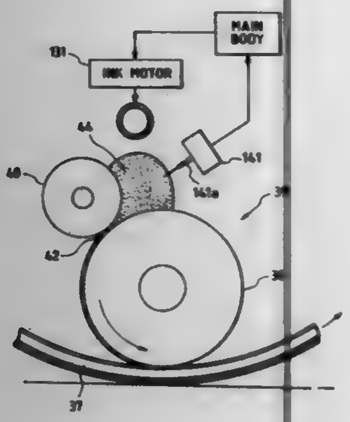

1. A stencil printing machine comprising:
a machine body;
a rotary cylindrical drum having an ink supply section, said rotary cylindrical drum being accommodated in said machine body;
an ink storing container containing an ink;
ink complementing means for supplying the ink to said ink supply section such that,
when the quantity of ink supplied into said ink supplying section is smaller than a predetermine value, said ink complementing means is driven to supply the ink from said ink storing container into said ink supplying section, and
when the quantity of ink in said ink supplying section does not reach said predetermined value within an ink-complementing-means operation time, a determination is made that no ink is left in said ink storing container, and a warning signal is produced;
quantity-of-ink detecting means for detecting whether or not the quantity of ink in said ink supplying section has reached said predetermined value;
kind-of-ink detecting means for detecting the kind of ink supplied into said ink supplying section in said rotary cylindrical drum; and
control means which operates to change, according to the kind of ink detected by said kind-of-ink detecting means, said ink-complementing-means operation time which elapses until a determination is made that no ink is left in said ink storing container.

5,699,732
COMBINATION STRETCH SCREEN AND ITS PRODUCTION METHOD
Yasushi Sano, Chiba, Japan, assignor to Micro-Tec Company Ltd., Chiba, Japan
Filed Aug. 28, 1995, Ser. No. 519,955
Claims priority, application Japan, Aug. 31, 1994, HEI 6-230766
Int. Cl.⁶ B41F *15/36*
U.S. Cl. 101—127 **18 Claims**

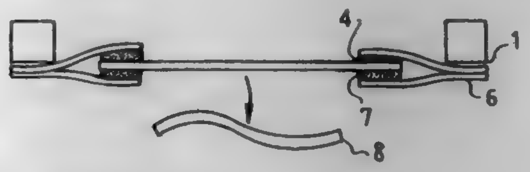

1. A combination stretch screen, comprising:
(a) a screen frame;
(b) two supporting screen-meshes, each supporting screen-mesh being fixed to the screen frame; and
(c) a print screen-mesh which is supported by the two supporting screen-meshes, wherein the two supporting screen-meshes at least partially overlap each other along a center portion of at least one edge of the print screen-mesh.

5,699,733
SCREEN PRINTING ON FILM COATED SUBSTRATES
De-An Chang, Hsinchu, and Jin-Yuh Lu, Taipei, both of Taiwan, assignors to Industrial Technology Research Institute, Hsinchu, Taiwan
Filed Sep. 25, 1996, Ser. No. 719,349
Int. Cl.⁶ B41C *1/12;1/34*
U.S. Cl. 101—129 **16 Claims**

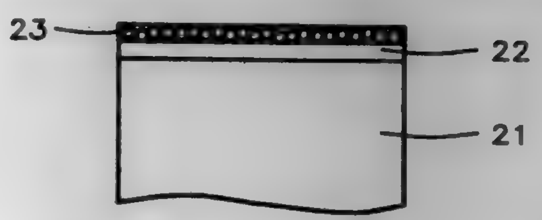

1. A method for screen printing comprising the sequential steps of:
providing a substrate having a top surface;
laminating a dry film onto said top surface;
screen printing a first layer of a paste onto said dry film;
optionally screen printing additional layers of paste on said first paste layer; and
firing the substrate, the dry film, and any of the paste layers, thereby removing said dry film.

5,699,734
GUARD PROVIDED AT A PRINTING MACHINE
Wolfgang Bitterich, Kirchardt, Germany, assignor to Heidelberger Druckmaschinen Aktiengesellschaft, Heidelberg, Germany
Filed Aug. 29, 1996, Ser. No. 697,853
Claims priority, application Germany, Aug. 29, 1995, 195 31 643.6
Int. Cl.⁶ B41F *1/64*
U.S. Cl. 101—216 **14 Claims**

1. A protective guard for a printing machine, the printing machine having two substantially vertical side frames and at least one unit to apply a substance to a sheet to receive the substance

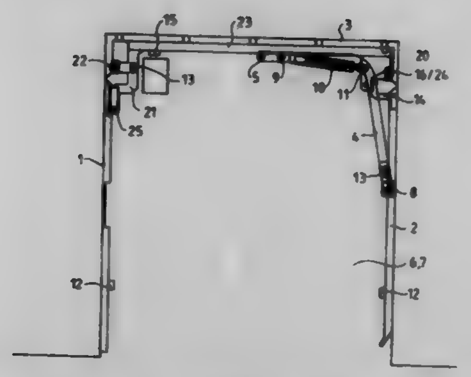

disposed between the side frames, the guard having a closed position wherein access to the at least one unit is substantially prevented, said guard comprising:
two side parts;
said two side parts comprising a side part and an additional side part;
said side part and said additional side part both being disposed substantially vertical in a closed position of said guard;
said side part having an upper end portion and a lower end portion disposed opposite one another;
said additional side part having an upper end portion and a lower end portion disposed opposite one another;
an upper part disposed substantially horizontal in a closed position of said guard and connecting said upper end portion of said side part and said upper end portion of said additional side part;
a frame disposed substantially horizontal in a closed position of said guard, and adjacent said upper part in a closed position of said guard;
said frame having a first end portion and a second end portion disposed substantially opposite one another, said first end portion being disposed adjacent said side part and said second end portion being disposed adjacent said additional side part;
said upper part having a first length;
said frame having a second length;
said first length and said second length being substantially equal to one another;
at least one pin configured for pivotally mounting said upper part to said first end portion of said frame;
at least one additional pin configured for pivotally mounting said side part to said first end portion of said frame;
at least one yet another pin configured for pivotally mounting said additional side part to said upper part; and
at least one trunnion being configured to be disposed to pivotally mount said frame to at least one side frame of a printing machine.

5,699,735
WEB-FED ROTARY PRESS
Götz Stein, Bolligen; Noel McEvoy, Ittigen; Ernst Lehmann, Hinterkappelen, and Marcello Tarchini, Bern, all of Switzerland, assignors to Maschinenfabrik WIFAG, Bern, Switzerland
Filed Oct. 3, 1995, Ser. No. 538,552
Claims priority, application Germany, Oct. 4, 1994, 44 35 429.0
Int. Cl.⁶ B41F *5/04;* **G06F** *15/46*
U.S. Cl. 101—219 **18 Claims**

1. A web-fed rotary press, comprising:
an adjustable reel changer for accommodating printing material webs of different widths;
cylinder pairs, each of said cylinder pairs including a printing cylinder and a plate cylinder and including means for changing a position of said printing cylinder from an inactive position to an engaged position with said printing cylinder engaging one of another printing cylinder and a counter

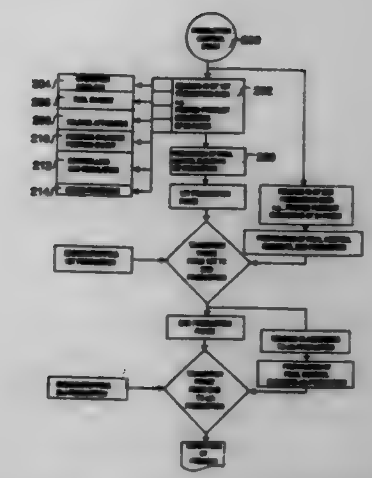

cylinder to form a printing couple, each printing couple forming a printing station whereby a plurality of printing stations are provided;
an adjustable folder; and
automatic adjustment means for adjusting the width of said reel changer, for adjusting the position of at least one said printing cylinder to change the state of at least one printing couple from engaged to inactive or from inactive to engaged and changing components of the said folder automatically and in a mutually coordinated manner during the run of the press to change over the production from a first printed product to a second printed product.

5,699,736
METHOD AND APPARATUS FOR CONTROLLING THE SHEET SUPPLY IN A SHEET-PROCESSING PRINTING MACHINE
Joachim Muller, Pullach, and Horst Klingler, Muhlheim, both of Germany, assignors to MAN Roland Druckmaschinen AG, Germany
Filed Mar. 20, 1996, Ser. No. 618,786
Claims priority, application Germany, Mar. 20, 1995, 195 10 082.4
Int. Cl.⁶ B41F *21/00*
U.S. Cl. 101—232 **10 Claims**

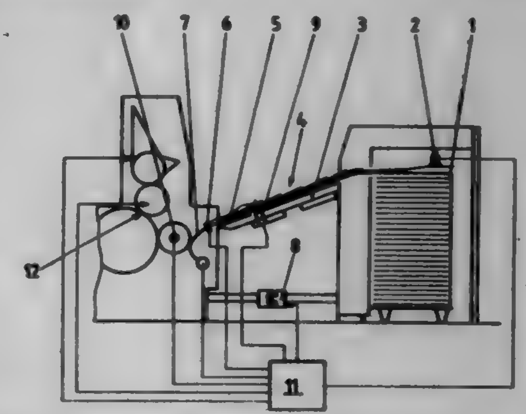

1. In a sheet-fed offset printing machine having a conveyer table connecting a sheet feeder unit to a first printing unit, a method for controlling the sheet supply in the sheet-fed offset printing machine comprising: moving a plurality of sheets from a feed pile to the conveyor table; feeding the plurality of sheets via the conveyor table to the printing machine; stopping the feeding of the plurality of sheets to the printing machine when a first sheet of the plurality of sheets reaches a set position on the conveyor table; determining a number of printing machine revolutions required for a predamping or a preinking process; determining a number of

printing machine revolutions required for the first sheet of the plurality of sheets to reach a first printing zone in the first printing unit from the set position on the conveyor table; determining a delay number of printing machine revolutions to delay the feeding of the plurality of sheets to the printing machine based on (1) the number of printing machine revolutions required for the predamping or the preinking process and (2) the number of printing machine revolutions required for the first sheet of the plurality of sheets to reach the first printing zone in the first printing unit from the set position on the conveyor table, such that the first sheet of the plurality of sheets at the set position reaches the first printing zone in the first printing unit approximately upon the expiration of the predamping or the preinking process; implementing the predamping or the preinking process in the first printing unit of the printing machine; and restarting the feeding of the plurality of sheets to the printing machine after the delay number of printing machine revolutions in the predamping or the preinking process.

5,699,737

DEVICE FOR THE THROW-ON AND THROW-OFF OF ROLLERS

Peter Hummel, Offenbach am Main, and Robert Ortner, Alzenau, both of Germany, assignors to MAN Roland Druckmaschinen AG, Germany

Filed May 2, 1996, Ser. No. 640,615

Claims priority, application Germany, May 3, 1995, 195 15 726.5

Int. Cl.^{6} B41F *13/24;* **B30B** *3/04*

U.S. Cl. 101—247 **19 Claims**

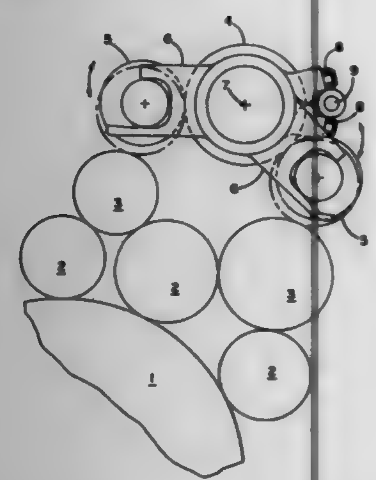

1. A printing press comprising a plurality of rollers disposed in parallel relation to each other, at least one of said rollers being mounted for pivotal movement between throw-on and throw-off positions with respect to other of said rollers, a pivot member rotatably supporting said one roller, said pivot member being mounted for pivotal movement, an adjusting rod disposed in parallel relation to the axis of said rollers, said pivot member having a follower portion biased into engagement with said adjusting rod, said adjusting rod being linearly moveable in a direction parallel to the axis of said rollers, and said pivot member and one roller supported thereby being pivotal between throw-on and throw-off positions with respect to said other rollers in response to linear movement of said adjusting rod.

5,699,738

APPARATUS AND METHOD FOR CLEANING A ROLLER

Frank C. Corrado; James W. Fischer, both of Rochester; Gary R. Larsen, Webster, and Ronald W. Sweet, New York, all of N.Y., assignors to Seratek LLC, Levonia Center, N.Y.

Continuation-in-part of Ser. No. 439,063, May 8, 1995, Pat. No. 5,611,281. This application Jun. 20, 1996, Ser. No. 667,177

Int. Cl.^{6} B41F *35/00*

U.S. Cl. 101—425 **19 Claims**

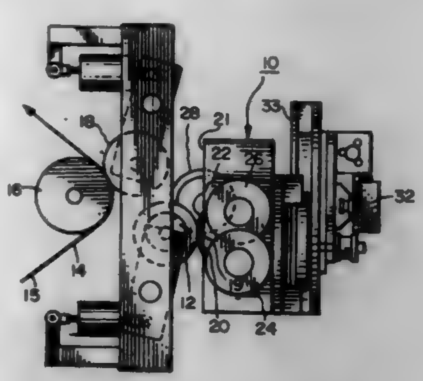

1. A system for cleaning contamination from the surface of a roller, comprising:

a first frame, a second frame, a cleaning pad mounted on said first frame adjacent to said roller, said roller being rotatably mounted on said second frame, at least one of said first and second frames being movable toward the other to urge said cleaning pad into rubbing contact with said surface of said roller such that a first force is applied by said pad against said roller;

a drive operatively connected to said roller for turning said roller surface past said cleaning pad when said pad is in rubbing contact with said roller surface; and

an actuator disposed against a portion of said cleaning pad and actuable in the direction of said roller for urging said portion of said cleaning pad against said roller at a second force, said portion of said cleaning pad being less than the whole of said pad, said second force acting in addition to said first force locally over said portion of said pad.

5,699,739

ASSEMBLY AND METHOD FOR RECLAIMING INCOMPATIBLE RESINS FROM PRINTING PLATES

Kenneth M. Strong, Hockessin, Del., assignor to MacDermid Imaging Technology, Waterbury, Conn.

Filed Oct. 31, 1996, Ser. No. 741,700

Int. Cl.^{6} B41M *5/00;* **B41F** *35/00*

U.S. Cl. 101—463.1 **8 Claims**

1. A system for removing incompatible liquid photopolymerizable resins from photopolymerized printing plates, said system comprising:

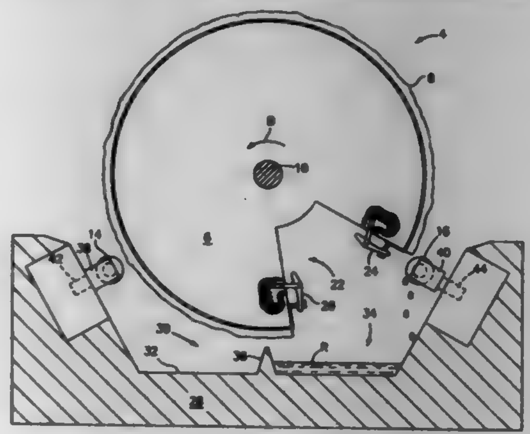

a) a single station for resin removal;

b) separate repositories at said station, there being a separate repository for each incompatible resin being removed at said station;

c) separate resin-removal tools for each separate repository at said station; and

d) means for holding a printing plate at said station and selectively bringing the printing plate into contact with one of said resin-removal tools so as to remove liquid resin from the plate and deposit the removed resin in one of said resin repositories.

5,699,740

METHOD OF LOADING METAL PRINTING PLATES ON A VACUUM DRUM

Daniel Gelbart, Vancouver, Canada, assignor to Creo Products Inc., Burnaby, Canada

Filed Jun. 17, 1996, Ser. No. 664,480

Int. Cl.^{6} B41L *47/14*

U.S. Cl. 101—477 **22 Claims**

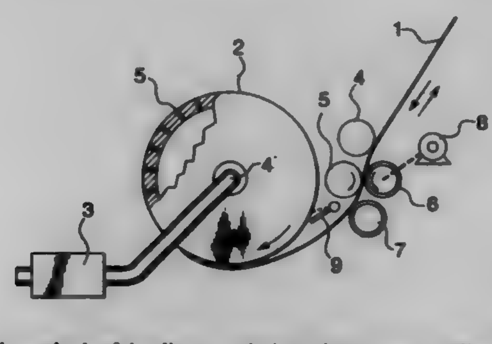

1. A method of loading a printing plate onto a cylinder, the method comprising the steps of:

imparting a curvature to said printing plate proximate said cylinder; and

loading the printing plate onto said cylinder substantially concurrently with said imparting step, the curvature imparted being such that the printing plate will snugly fit around the cylinder.

5,699,741

DOCUMENT PRINTER AND A PROCESS FOR REGISTERING THE DOCUMENTS BY MEANS OF CONTROL MARKINGS USING THIS DOCUMENT PRINTER

Peter Schmidt; Wolfgang Heise, both of Paderborn, and Bernhard Lappe, Büren, all of Germany, assignors to Siemens Nixdorf Informationssysteme Aktiengesellschaft, Paderborn, Germany

PCT No. PCT/DE94/00072, § 371 Date Sep. 25, 1995, § 102(e) Date Sep. 25, 1995, PCT Pub. No. WO94/22117, PCT Pub. Date Sep. 29, 1994

PCT Filed Jan. 27, 1994, Ser. No. 525,672

Claims priority, application Germany, Mar. 23, 1993, 43 09 309.4

Int. Cl.^{6} B41F *13/24*

U.S. Cl. 101—485 **12 Claims**

1. A process for registering documents by means of control markings using a document printer having a print unit and a conveying channel with an associated transport device which transports the documents in a predefinable transport position through the document printer to an outlet of a document removal bay, comprising the steps of:

feeding documents into a document printer,

imprinting a succession of control markings on a succession of the documents, consideration being given to a predefinable

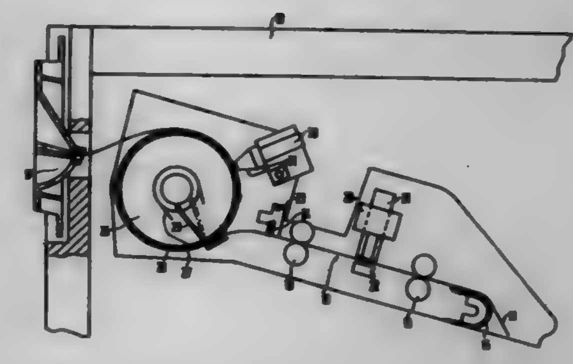

transport position of the documents relative to said document printer during said imprinting step,

collecting the documents after said imprinting step in a collecting bay;

scanning the control markings on each document after its arrival in said collecting bay directly before the outlet of the document removal bay by means of a reading device, relative motion of the reading device and the documents as required for the scanning operation being generated by transportation of the documents in the collecting bay so that said control markings of each document are scanned as each document is being removed from said document removal bay.

5,699,742

METHOD AND DEVICE FOR EXACTLY ALIGNING A PRINTING IMAGE RELATIVE TO A GEOMETRICALLY CORRECT PRINT POSITION OF A PRINTING MACHINE

Harald Ahrens, Hanover; Rainer Tiebel, Wedemark, and Rainer Ziefle, Isernhagen, all of Germany, assignors to Polygram International Holdings B.V., Baarn, Netherlands

Filed Jun. 17, 1996, Ser. No. 664,719

Claims priority, application Germany, Jun. 22, 1995, 19522676.3

Int. Cl.^{6} B41L *3/02*

U.S. Cl. 101—486 **10 Claims**

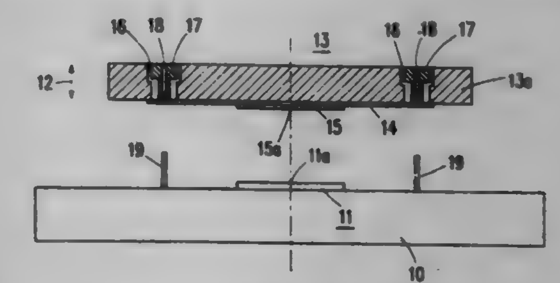

1. A method of exactly aligning a printing image relative to a geometrically correct print position of a printing machine for printing carriers, which method employs use of a printing foil having a hole system which has been aligned relative to the image center and being secured to a printing screen having locating bores which have been aligned relative to the image center and which correspond to locating pins of the printing machine which have been aligned relative to the carrier center, wherein the method comprises:

a) the printing foil is provided with at least two registration marks which have been aligned relative to the image center and is secured to the printing screen in a substantially centered relationship,

b) the printing screen is movably secured to an optical centering device comprising master pins which are positionally identical to the locating pins of the printing machine,

c) the registration marks of the printing foil are brought in register with positionally identical registration marks of the optical centering device,

d) centering elements are slid onto the master pins with an accurate fit, and

e) the master pins provided with the centering elements are made to engage the radially enlarged locating bores of the printing screen with clearance and are secured in their centered positions.

5,699,743

COMPOSITION AND METHOD FOR RAISED THERMOGRAPHIC PRINTING

Leonard R. Ganz, 16 Country Club Way, Demarest, N.J. 07627, and Anthony F. Urgola, 2630 River Rd., Manasquan, N.J. 08736

Filed May 17, 1996, Ser. No. 649,430

Int. Cl.^{6} B05D *5/00; 5/02*

U.S. Cl. 101—488 **11 Claims**

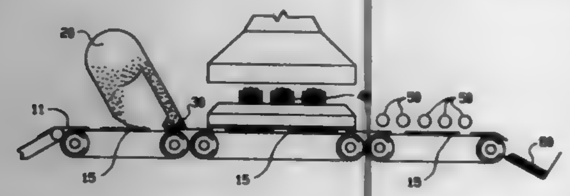

1. A method of making a raised thermographic product comprising the steps of:

preparing a large granulation powder having a particle size of about 20 to 50 mesh;

printing a wet ink line having a width of about 1/16 to 1/8 inch on a substrate for receiving the large granulation powder;

placing a sufficient amount of the large granulation powder on the wet ink line to provide a desired height to the raised thermographic product;

removing a sufficient amount of large granulation powder from the substrate to avoid a blurred thermographic product, while leaving a sufficient amount in contact with the ink line to provide the desired height;

heating the substrate over an amount of time sufficient to entirely melt and fuse the large granulation powder to yield a smooth surface, yet insufficient to cause flattening of the large granulation powder; and

cooling the fused large granulation powder sufficiently to avoid flattening, sticking, or smearing of the fused powder, thereby obtaining a raised thermographic product greater than at least 0.01 inches in height.

5,699,744

ADJUSTABLE MONITOR SUPPORT FOR FLAT MONITORS

John N. Lechman, Effingham, Ill., assignor to Nova Solutions, Inc., Effingham, Ill.

Continuation-in-part of Ser. No. 428,860, Apr. 25, 1995, which is a continuation-in-part of Ser. No. 134,103, Oct. 12, 1993, Pat. No. 5,408,939, which is a continuation-in-part of Ser. No. 24,196, Feb. 26, 1993, Pat. No. 5,290,099, which is a continuation-in-part of Ser. No. 907,193, Jun. 30, 1992, abandoned, which is a continuation-in-part of Ser. No. 693,392, Apr. 30, 1991, Pat. No. 5,125,727, which is a continuation-in-part of Ser. No. 595,864, Oct. 11, 1990, abandoned. This application May 31, 1995, Ser. No. 451,026

Int. Cl.^{6} A47B *9/00*

U.S. Cl. 108—109 **5 Claims**

1. An adjustable support assembly for positioning and supporting a flat monitor under a transparent portion in a working platform of a work station comprising:

(a) a shelf subassembly for supporting a flat monitor means comprising in combination:

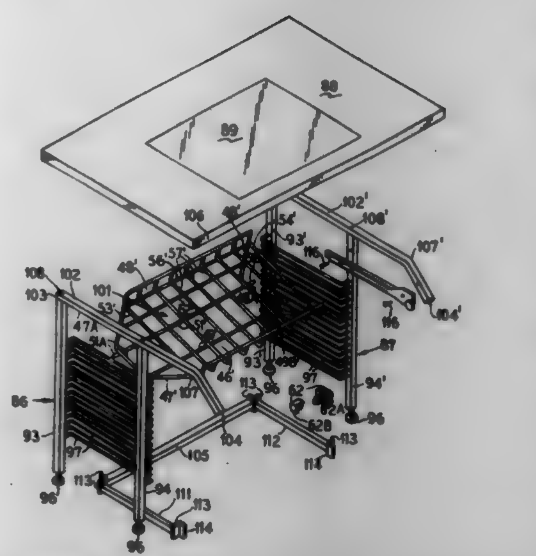

(1) a generally rectangular, flattened shelf member having a front edge region, a rear edge region, and opposed lateral side regions, and

(2) a pair of generally U-configured frame members, each one being substantially vertically oriented, disposed in spaced, parallel relationship relative to the other, and each one having opposite ends, each respective opposite end being fastened to a different one respective lateral side region of said shelf member, so that said frame members extend generally downwardly from said shelf member with each one of said frame members extending from a different one of said lateral side regions;

(b) a pair of side supports, each one being substantially vertically oriented, disposed in spaced, parallel relationship relative to the other thereof, and located adjacent to a different respective one of said U-configured frame members, each one of said side supports having:

(1) a pair of transversely spaced vertically extending leg members, and

(2) a plurality of vertically spaced, transversely extending load bearing members, each member including fastening means mounting each of its opposite end portions to a different one of said leg members; and

(c) means for adjustably connecting each individual one of said U-configured frame members selectively to the adjacent respective one of said side supports so that each one of said U-configured frame members is connected to at least one of said load bearing members of each said side support;

whereby said shelf member is vertically positionable, transversely translatable and tiltably adjustable relative to said side supports.

5,699,745

ANIMAL CARCASS INCINERATOR

Mark A. Kaehr, Decatur, Ind., assignor to R & K Incinerator, Inc., Decatur, Ind.

Filed Jan. 17, 1995, Ser. No. 373,584

Int. Cl.^{6} F23G *1/00*

U.S. Cl. 110—194 **5 Claims**

1. An incinerator for burning animal carcasses, comprising:

an insulated housing defining a combustion chamber therein and including an inner surface and an outer surface;

a burner disposed at a first end of said combustion chamber, said burner including means for producing a flame directly into said combustion chamber, said burner further including a valved fuel passage between a fuel source and a fuel nozzle;

means for introducing air into said combustion chamber;

a vent opening disposed in said housing opposite said burner for providing a gaseous discharge of the oxidation product of combustion;

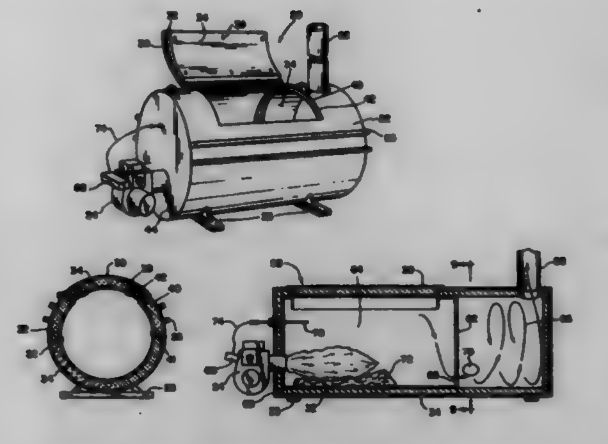

a charge opening in said housing and a charge door secured to said housing and movable between a closed position in which said door is disposed over said charge opening and an open position in which said door is not disposed over said charge opening; and

a controller for controlling the temperature of said combustion chamber during incineration, said controller comprising a control unit secured to said valve, a heat sensor secured in said combustion chamber, and a line for communicating a temperature signal produced by said heat sensor to said control unit, wherein said control unit closes said fuel valve upon the combustion chamber reaching a first predetermined temperature and said control unit again opens said fuel valve upon the combustion chamber reaching a second and lower predetermined temperature and said means for introducing air continuously supplies air to said combustion chamber when said combustion chamber temperature is between said first and second temperature and said fuel valve is closed.

5. In combination, an animal carcass incinerator and an animal carcass; said incinerator comprising:

a cylindrical housing defining a combustion chamber therein and including an inner surface and an outer surface, said cylindrical housing having a substantially horizontal axis, said animal carcass disposed in said combustion chamber;

supports attached to said housing and repositionably bearing against a ground surface;

an insulative material disposed adjacent said housing and insulating a substantial portion of said housing;

a burner disposed at a first end of chamber, said burner including means for producing a flame directly into said combustion chamber, said burner further including a valved fuel passage between a fuel source and a fuel nozzle;

means for introducing air into said combustion chamber;

a vent opening disposed in said housing opposite said burner for providing a gaseous discharge of the oxidation product of combustion;

a charge opening in said housing and a charge door secured to said housing and movable between a closed position in which said door is disposed over said charge opening and an open position in which said door is not disposed over said charge opening; and

a controller for controlling the temperature of said combustion chamber during incineration, said controller comprising a control unit secured to said valve, a heat sensor secured in said combustion chamber, and a line for communicating a temperature signal produced by said heat sensor to said control unit, wherein said control unit closes said fuel valve upon the combustion chamber reaching a first predetermined temperature and said control unit again opens said fuel valve upon the combustion chamber reaching a second and lower predetermined temperature and said means for introducing air continuously supplies air to said combustion chamber when said combustion chamber temperature is between said first and second temperature and said fuel valve is closed.

5,699,746

METHOD AND APPARATUS FOR FEEDING AIR INTO A FURNACE

Samuli Nikkanen, and Markku Taattu, both of Varkaus, Finland, assignors to A. Ahlstrom Corporation, Noormarkku, Finland

Filed Apr. 4, 1996, Ser. No. 627,613

Claims priority, application Finland, Apr. 6, 1995, 951640

Int. Cl.^{6} F23L *15/00*

U.S. Cl. 110—348 **20 Claims**

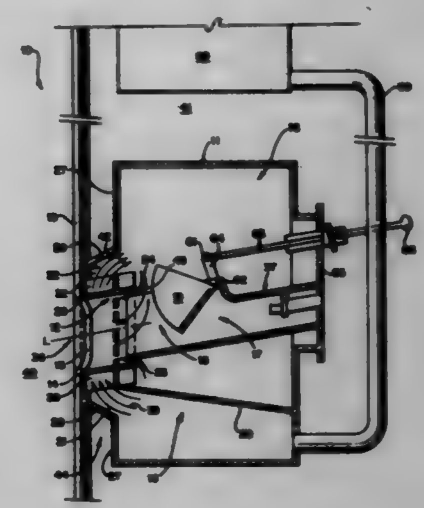

1. A method of feeding combustion gas to a furnace through a gas nozzle disposed in association with a furnace wall, the nozzle having a longitudinal axis of elongation, an exterior, and a hollow interior and wherein the nozzle includes a portion thereof engaging the furnace wall; said method comprising the steps of:

(a) directing cooling gas into contact with both the nozzle exterior of the nozzle portion engaging the furnace wall, and furnace wall; and

(b) passing combustion gas through the nozzle hollow interior substantially along the longitudinal axis of elongation thereof so that the combustion gas enters the furnace and facilitates combustion within the furnace.

5,699,747

APARATUS FOR RESTRAINING VIOLENT DETAINEES

Ronald J. O'Dell, 6230 Lakeview Cir., San Ramon, Calif. 94583, and Craig J. Zamolo, 1979 Mohawk Dr., Pleasant Hill, Calif. 94523

Filed Feb. 2, 1996, Ser. No. 595,598

Int. Cl.^{6} A61B *19/00*

U.S. Cl. 128—869 **17 Claims**

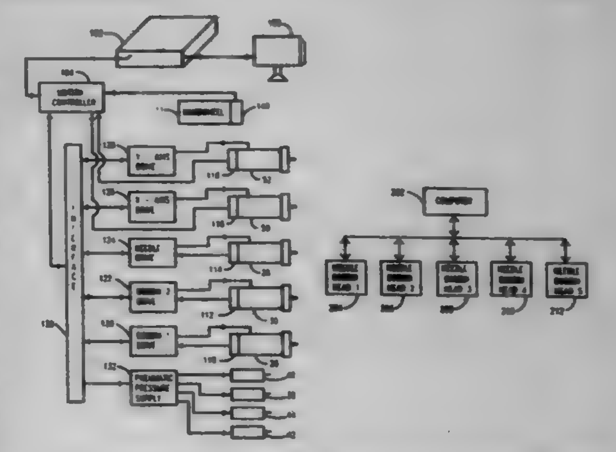

1. A restraining device for restraining violent detainees, comprising:

leg binding means comprised of a body of high-strength, flexuous sheet material adapted to be wrapped around the legs of said detainee and having an upper edge and a lower edge opposed thereto, said upper edge being nearer to the buttocks of said detainee than to the knees of said detainee, and said lower edge being nearer to the ankles of said detainee then to the knees of said detainee wherein the length from the upper edge to the lower edge is equal to or less than the distance from a hip to an ankle of the detainee when said detainee is restrained in said restraining device;

closure means for maintaining said leg binding means closed about the legs of said detainee;

leg flexure preventing means attached to said leg binding means and adapted to extend from above to below the restrained knees of the detainee, comprising one or more supports substantially longitudinal with respect to straightened legs of the detainee, the leg flexure preventing means having a length equal to or less than the distance from a hip to an ankle of the detainee when said detainee is restrained in said restraining device and adapted to retain the legs of a detainee in a straight configuration; and

retaining means comprising one or more flexible straps attached to the leg binding means and extending above the upper edge to attach to flexible means adapted to prevent doffing of the leg flexure preventing means and to permit raising the detainee to a sitting position.

5,699,748

LINE HANDLING DEVICE FOR POSITIONING AND HANDLING OF MOORING LINES

Edward Linskey, Jr., 3030 NW. 23 rd Ave., Ft. Lauderdale, Fla. 33311, and Robert V. Daigle, 762 NE. 42nd St., Pompano Beach, Fla. 33069

Filed Feb. 6, 1997, Ser. No. 796,533
Int. Cl.^{6} B63B *21/56*

U.S. Cl. 114—221 R **13 Claims**

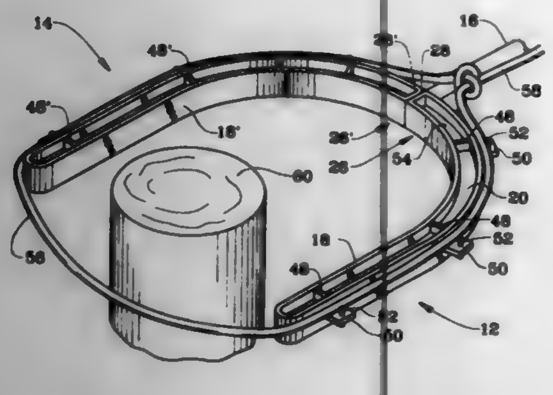

1. An apparatus for positioning a mooring or docking line, said apparatus comprising:

an extension pole having an elongated shaft with a distal end;

a two-piece line spreader structure defined by an arc-shaped first spreader arm having at least one line-support means projecting outwardly from an outer wall thereof and an arc-shaped second spreader arm having at least one line-support means projecting outwardly from an outer wall thereof, said second spreader arm forming a mirror image of said first spreader arm; and

means for coupling said first spreader arm and said second spreader arm to said distal end of said pole;

whereby said spreader structure forms a U-shaped configuration upon coupling of said first and second spreader arms to said pole, wherein said spreader structure facilitates positioning of a mooring line by maintaining a line loop sized to encircle a piling.

5,699,749

EXHAUST SYSTEM, HULL, AND SPEED INDICATOR FOR WATERCRAFT

Hisato Yamada; Mitsuhisa Hirano, and Yasukazu Kojima, all of Iwata, Japan, assignors to Yamaha Hatsudoki Kabushiki Kaisha, Iwata, Japan

Filed Oct. 18, 1995, Ser. No. 544,887
Claims priority, application Japan, Oct. 21, 1994, 6-256599
Int. Cl.^{6} B63B *35/00*

U.S. Cl. 114—270 **27 Claims**

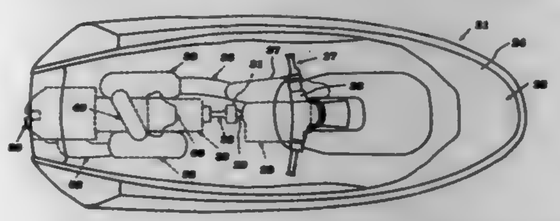

1. A watercraft comprised of a hull with an undersurface defining a tunnel at the rear end thereof, a propulsion device positioned at least in part within said tunnel for propelling said watercraft, said hull further defining an engine compartment containing an engine for driving said propulsion device, said engine having an exhaust system for discharging exhaust gases from exhaust ports thereof to the atmosphere, said exhaust system comprising first and second exhaust treatment devices positioned within said hull on opposite sides of said tunnel, each of said exhaust treatment devices being comprised of an outer housing defining at least one expansion chamber therein, an exhaust pipe extending from said engine on one side of said hull and opening into said first exhaust treatment device at one longitudinal end thereof for delivering exhaust gases from said engine thereto, a generally inverted U-shaped transfer pipe extending over said tunnel from an inlet end at an upper portion of said first exhaust treatment device at the other longitudinal end thereof and terminating at a discharge end in an upper portion of said second exhaust treatment device at a position forwardly of the aft end of said second exhaust treatment device, and an exhaust discharge pipe extending from said aft end of said second exhaust treatment device for discharging exhaust gases to the atmosphere.

5,699,750

SELF-BAILING WATERSPRITE WITH POSITIVE BUOYANCY

Charles R. Schneider, Oshkosh, Wis., assignor to Brunswick Corporation, Lake Forest, Ill.

Filed Sep. 3, 1996, Ser. No. 707,011
Int. Cl.^{6} B63B *5/24*

U.S. Cl. 114—357 **12 Claims**

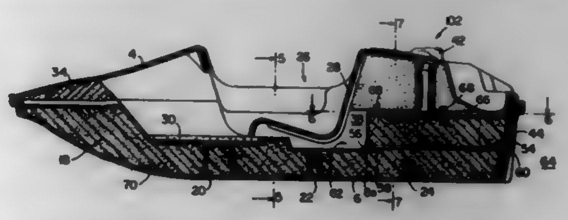

1. A watersprite comprising:

a plastic outer hull assembly having peripheral edge;

a plastic inner hull liner having a peripheral edge that is attached to the peripheral edge of the outer hull, the inner hull liner being placed above the outer hull assembly to define a bilge volume therebetween;

at least one stiffener located in the bilge volume between the outer hull assembly and the inner hull liner to support the outer hull assembly in a fixed position relative to the inner hull liner;

closed-cell foam completely filling the bilge volume;

an upper deck assembly having a peripheral edge that is attached to the peripheral edge of the outer hull and to the peripheral edge of the inner hull liner, the upper deck assembly being located above the inner hull liner to define a deck space therebetween; and

a self-bailing pipe having an inlet opening into the deck space between the upper deck assembly and the inner hull liner and an outlet opening outside of the watersprite, the inlet of the pipe being positioned above the waterline of the watersprite and at least as high as the outlet of the pipe so that the self-bailing pipe drains liquid that has accumulated within the deck space to the outside environment.

5,699,751

METHOD AND APPARATUS FOR IN OVO INJECTION

Patricia V. Phelps, and Thomas E. Bryan, both of Raleigh, N.C., assignors to Embrex, Inc., Research Triangle Park, N.C.

Filed Oct. 2, 1996, Ser. No. 723,610
Int. Cl.^{6} A01K *43/00*

U.S. Cl. 119—6.8 **22 Claims**

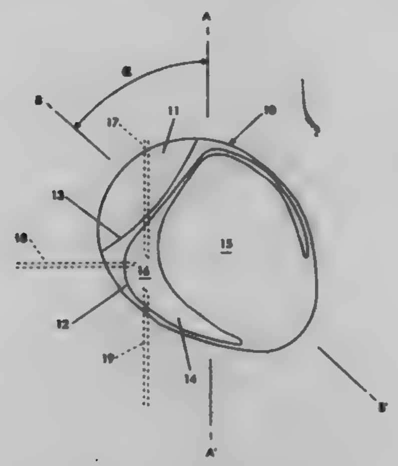

1. A method for injecting a beneficial agent into the allantois of an avian egg which comprises:

selecting an avian egg in the 5th to 18th day of incubation;

orienting the longitudinal axis of the egg to a predetermined angle from about 10 degrees to 180 degrees from vertical wherein the large end of the egg in an upwardly vertical position defines zero degrees vertical, thereby causing the allantois of the egg to pool and enlarge the allantoic sac in a predetermined area of the egg;

inserting an injection needle through the shell of the egg and into the enlarged allantoic sac in said predetermined area; and

discharging the beneficial agent through the needle and into the allantois of the egg.

5,699,752

GELATIN-PLASTIC FOAM BIRD FEEDING STATION AND PROCESS

Judd R. Wilkins, 281 Littletown Quarter, Williamsburg, Va. 23185

Filed Nov. 22, 1996, Ser. No. 755,485
Int. Cl.^{6} A01K *39/01*

U.S. Cl. 119—51.03 **19 Claims**

1. A bird feeder adapted to be suspended from an overhead support comprising:

a substantially funnel shaped canopy having a tubular protuberance terminating at a small opening at one end thereof;

a first washer means sealed to a first end of said tubular protuberance of said canopy;

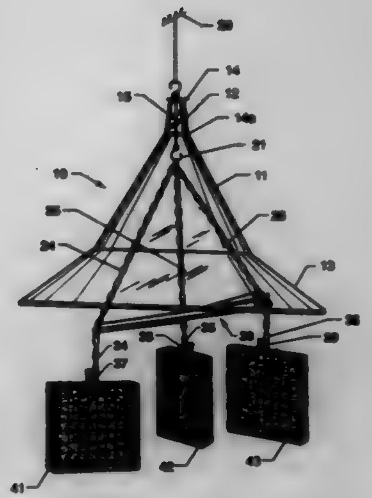

a second washer means spaced from said first washer means and sealed to a second end of said tubular protuberance of said canopy;

support means extending the length of said tubular protuberance of said canopy and through said first and said second washer means;

said support means including

(1) a first attachment structure leading from said first washer and extending exteriorly from said first end of said tubular protuberance of said canopy and,

(2) a second attachment structure leading from said second washer and extending interiorly within said funnel shaped canopy; and,

means releasably secured to said second attachment structure for supporting at least one container of bird seed.

5,699,753

ANIMAL FEEDER

James K. Aldridge, III, Rte. 1 Box 419, La Grange, N.C. 28551

Filed Aug. 4, 1995, Ser. No. 511,108
Int. Cl.^{6} A01K *39/012*

U.S. Cl. 119—52.1 **18 Claims**

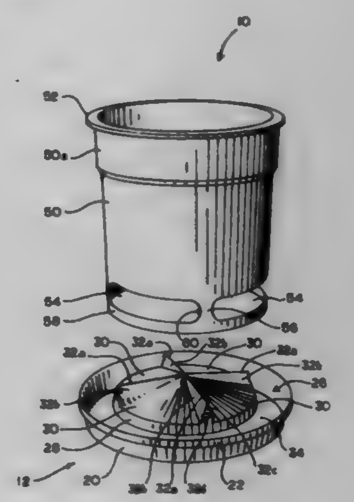

1. A two-piece animal feeder for feeding animals such as small turkeys and chickens, comprising:

a) a base member having an annular feeding trough defined about the periphery thereof;

b) a cylindrical feed tube having a cylindrical wall structure having inner and outer sides and upper and lower open ends, the cylindrical feed tube being designed to be supported on

the base member and functioning to confine feed therein end to direct the feed downwardly by gravity to the annular feeding trough;

c) a raised central island formed in the base member with the central island projecting upwardly from the base member and designed to project upwardly in the lower open end of the feed tube so as to generally center the feed tube about the base member and to limit lateral movement of the feed tube with respect to the base member;

d) a series of spaced apart elongated horizontal feed cut-outs formed in the cylindrical wall of the feed tube adjacent the lower open end, the feed cut-outs being normally disposed adjacent the annular feeding trough when the feed tube is supported on the base member thereby directing the gravity flowing feed from the feed tube downwardly and outwardly through the feed cut-outs into the annular feeding trough; and

e) a fastening structure for attaching the cylindrical feed tube to the base member including cooperating fasteners formed on the inside wall of the cylindrical wall structure of the feed tube and on the centering island projecting upwardly from the base member, and wherein the fasteners are operative to assume an unattached and an attached mode, and wherein the fasteners associated with the feed tube and base member include at least one groove and a mating locking bead with the locking bead adapted to be inserted into the groove to form a locked relationship.

5,699,754
LITTER BOX
Janice Cabajio, 3736 S. 53rd Ct., Cicero, Ill. 60650
Filed Jan. 31, 1996, Ser. No. 594,436
Int. Cl.[6] A01K *29/00; 1/01*
U.S. Cl. 119—166 11 Claims

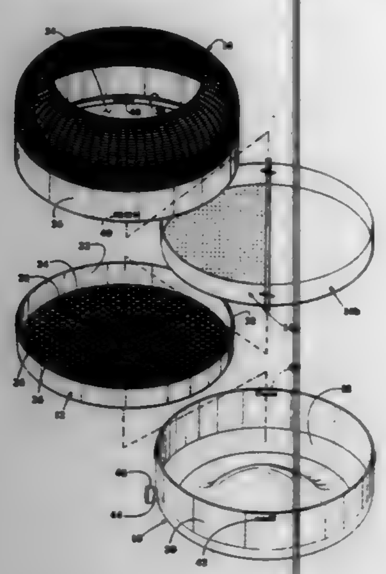

1. A litter box comprising:
a bottom container having a generally circular vertical sidewall and defining a urine-collection cavity;
a tray having a generally circular vertical sidewall and a perforated litter-support surface defining a litter cavity, the tray also including a lip on an exterior of its sidewall to support the tray against the sidewall of the bottom container;
a top having a generally circular vertical sidewall and a cat-access opening, the sidewall of the top fitting over the tray and securing to the bottom container, the top being shaped to abut the tray so that the tray is secured between the top and bottom container; and
a lip on an interior of the sidewall of the top which abuts against the lip of the tray and presses the tray against the bottom container.

5,699,755
LIVESTOCK HANDLING APPARATUS AND METHOD
David Wills, Roydon, and Geoffrey Francis Bateman, Willisham Tye, both of United Kingdom, assignors to Anglia Autoflow Limited, Norfolk, United Kingdom
Division of Ser. No. 560,109, Nov. 17, 1995, Pat. No. 5,660,147. This application Jan. 9, 1997, Ser. No. 781,776
Claims priority, application United Kingdom, Nov. 22, 1994, 9423587; Apr. 25, 1995, 9508336
Int. Cl.[6] A01K *29/00*
U.S. Cl. 119—846 19 Claims

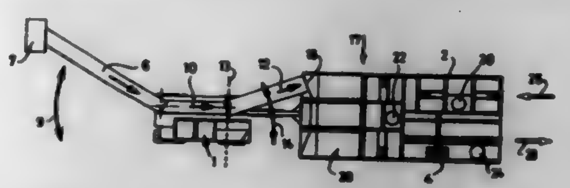

1. Apparatus for gathering and loading poultry into a module made up of a stack of cages having openable front flaps, comprising: a load unit having a batching receptacle for receiving a batch of poultry corresponding to the capacity of any one single cage, the batching receptacle having an input to receive the poultry and an output to discharge the poultry, the batching receptacle being operable to move the poultry from the input to the output, a delivery means for cooperating in turn with each cage of the module to deliver poultry from the output of the batching receptacle into a cage having an opened front flap, and a separate catching vehicle, capable of moving independently of the loading unit, to catch live poultry and bring accumulated poultry to a receiving location of the loading unit.

5,699,756
WET-BASE, DOWN-FIRED WATER HEATER
David O. Ross, Montgomery; Dale A. Southerland, Eclectic, and Timothy D. Gantt, Pike Road, all of Ala., assignors to Rheem Manufacturing Co., New York, N.Y.
Filed Oct. 8, 1996, Ser. No. 727,258
Int. Cl.[6] F22B *5/00*
U.S. Cl. 122—17 5 Claims

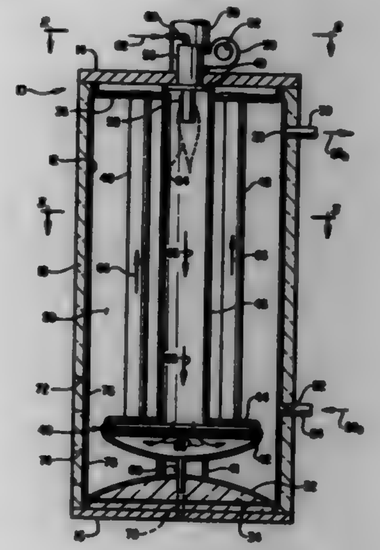

1. A forced draft, fuel-fired water heater comprising:
a vertical tank centered about a vertical axis and having an internal chamber adapted to hold a quantity of water, said tank having a top end, a bottom end, an inlet for receiving pressurized water to be heated within said internal chamber, and an outlet for discharging pressurized heated water from said internal chamber;

dbe

a vent plenum structure formed within a top end portion of said tank, downwardly adjacent the underside of said top end thereof, and defining a top end boundary of said internal chamber, said vent plenum structure having an outlet passage extending outwardly through said tank and connectable to an external combustion product vent pipe;
an enclosed, hollow turn bowl structure disposed within a lower end portion of said internal chamber, said hollow turn bowl structure being centered about said vertical axis and having a top side wall and a bottom side wall;
a vertically oriented burner tube extending through said internal chamber along said vertical axis, said burner tube having an upper end positioned adjacent said top end of said tank, and a lower end portion extending downwardly through said top side wall of said turn bowl structure and opening into the interior of said turn bowl structure;
a plurality of vertically oriented flue tubes extending through said internal chamber in a symmetrically spaced array extending outwardly around and centered about said burner tube, said flue tubes having open upper end portions extending through the underside of said vent plenum structure and opening into the interior of said vent plenum structure, and open lower end portions extending through said top side wall of said turn bowl structure and opening into the interior of said turn bowl structure,
each of said flue tubes, said burner tube and said turn bowl structure, during operation of said water heater, being submerged in and in intimate heat transfer contact with water within said internal chamber of said tank;
burner means extending downwardly through an upper end portion of said burner tube and being operative to receive a pressurized fuel/air mixture from a source thereof, and ignite the received fuel/air mixture to form hot combustion products which are sequentially flowed downwardly through said burner tube into said turn bowl structure, upwardly through said flue tubes into said vent plenum structure, and then outwardly through said outlet passage of said vent plenum structure; and
fuel/air delivery means operative to flow a pressurized fuel/air mixture to said burner means,
said bottom end of said tank being defined by an upwardly domed bottom head structure,
said turn bowl structure being supported atop said bottom head structure by a vertically oriented hollow cylindrical support column centered about said axis, and
said water heater further comprising a condensate drain tube centrally extending downwardly from said turn bowl structure through the interior of said support column into said bottom heat structure and having an interior communicating with the interior of said hollow turn bowl structure.

5,699,757
INTERNAL COMBUSTION ENGINE
Georg B. Wolby, Sudetenstrasse 19, D-82515 Wolfratshausen, Germany, and Marian Chmiel, ul. Mercinka 2a/5, PL 57-300 Klodzko, Poland
Filed Sep. 24, 1996, Ser. No. 718,676
Int. Cl.[6] F02B *53/00*
U.S. Cl. 123—18 R 12 Claims

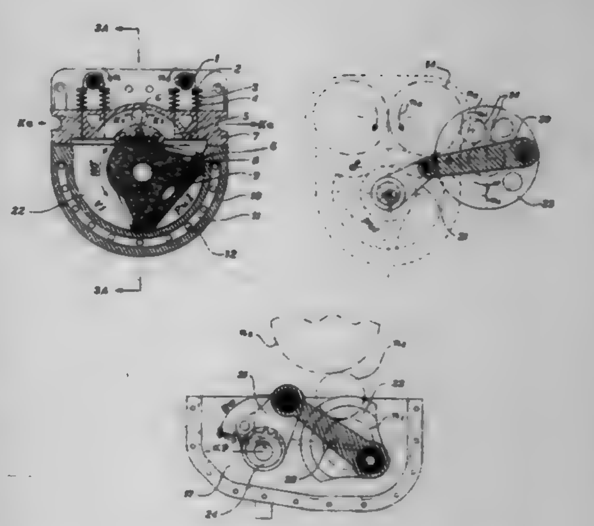

1. Swivel-blade internal combustion engine which produces gas pressure energy for two-cycle and four-cycle operation comprising:
a reciprocating shaft (24);
a reciprocating element (9) supported on said reciprocating shaft (24), said reciprocating element (9) having a working surface adapted and positioned to receive gas pressure energy for producing an oscillating pendulum moment in the reciprocating element, said working surface having a shape which deviates from both a rectangular and circular segment form, said working surface having a wider surface area presented at locations more distant from the reciprocating shaft (24);
rocker arm means (16) for converting the pendulum moment into the torque of a crankshaft (25), said rocker arm means further comprising a swing arm (21) fixed solidly on the reciprocating shaft (24), said swing arm (21) spanning a pendulum angle βw of a minimum of 90° and a maximum of 130° and having an angle φp which moves in a range greater than 0° up to a maximum of 30° and an articulated connecting rod (20) connected to the swing arm and to the crankshaft through which the pendulum moment is passed to the crankshaft.

5,699,758
METHOD AND APPARATUS FOR MULTIPLE CYCLE INTERNAL COMBUSTION ENGINE OPERATION
John M. Clarke, Chillicothe, Ill., assignor to Caterpillar Inc., Peoria, Ill.
Filed Feb. 15, 1996, Ser. No. 601,897
Int. Cl.[6] F02M *25/06*
U.S. Cl. 123—21 25 Claims

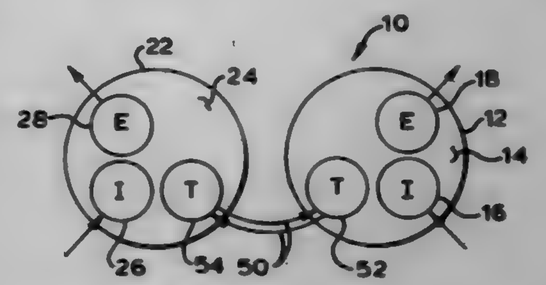

1. A method of selectively operating in two-stroke, four-stroke, or six-stroke operation of an internal combustion, reciprocating piston engine having a first cylinder in which a first piston reciprocally operates, the first cylinder further including a first intake valve, a first exhaust valve, and a first transfer valve; and a second cylinder in which a second piston reciprocally operates, the second cylinder further including a second intake valve, a second exhaust valve, and a second transfer valve, said method comprised of the steps of:
a) opening the first transfer valve as the first piston is substantially near Top Dead Center of a combustion stroke, wherein combustion gases are generated:
b) opening the second transfer valve at substantially the same time as the first transfer valve is opened;
c) permitting a portion of the combustion gases generated in the combustion stroke of the first piston to flow through said transfer passage means to said second piston;
d) permitting said portion of the combustion gases in said second piston to expand in said second cylinder to generate work energy;

e) closing said first transfer valve to prevent flow from said first cylinder at the completion of expansion in said first cylinder;
f) opening said first exhaust valve to permit exhaust of combustion gases from said first cylinder;
g) closing said second transfer valve at the completion of the expansion in said second cylinder;
h) opening said second exhaust valve at the completion of the expansion in said second cylinder to permit the exhaust of the combustion gases therefrom, and alternatively comprising the further steps of:
i) opening the second transfer valve as the second piston is substantially near Top Dead Center of a combustion stroke, wherein combustion gases are generated:
j) opening the first transfer valve at substantially the same time as the second transfer valve is opened;
k) permitting a portion of the combustion gases generated in the combustion stroke of the second piston to flow through said transfer passage means to said first piston;
l) permitting said portion of the combustion gases in said first piston to expand in said first cylinder to generate work energy;
m) closing said second transfer valve to prevent flow from said second cylinder at the completion of expansion in said first cylinder;
n) opening said second exhaust valve to permit exhaust of combustion gases from said second cylinder;
o) closing said first transfer valve at the completion of the expansion in said first cylinder; and
p) opening said first exhaust valve at the completion of the expansion in said first cylinder to permit the exhaust of the combustion gases therefrom.

5,699,759
FREE-FLOW BUOYANCY CHECK VALVE FOR CONTROLLING FLOW OF TEMPERATURE CONTROL FLUID FROM AN OVERFLOW BOTTLE
Thomas J. Hollis, 5 Roxbury Dr., Medford, N.J. 08055, assignor to Thomas J. Hollis, Medford, N.J.
Filed Dec. 21, 1995, Ser. No. 576,713
Int. Cl.⁶ F01P *7/16*
U.S. Cl. 123—41.08 **10 Claims**

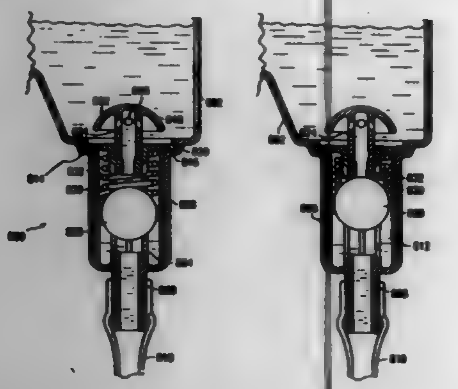

1. A valve for controlling flow of temperature control fluid between a radiator fluid overflow container and a water pump in an internal combustion engine, the valve comprising a housing in communication with the fluid overflow container and adapted to receive a flow of temperature control fluid therefrom, the housing having a valve chamber formed therein for channeling a flow of temperature control fluid, the housing also being in communication with the water pump and adapted to channel a flow of temperature control fluid between the valve chamber and the water pump; and means disposed within the valve housing for controlling flow of temperature control fluid between the fluid overflow container and the water pump, wherein the means for controlling flow of temperature control fluid includes a cap attached to the valve housing and having a channel formed therein which is adapted to conduct fluid flow between the fluid overflow container and the valve chamber.

5,699,760
COOLING SYSTEM FOR INTERNAL COMBUSTION ENGINE
Jialin Yang, Canton; George Fredric Leydorf, Jr., Birmingham, and Richard Walter Anderson, Ann Arbor, all of Mich., assignors to Ford Global Technologies, Inc., Dearborn, Mich.
Filed Mar. 21, 1997, Ser. No. 829,031
Int. Cl.⁶ F02B *75/18*
U.S. Cl. 123—41.74 **15 Claims**

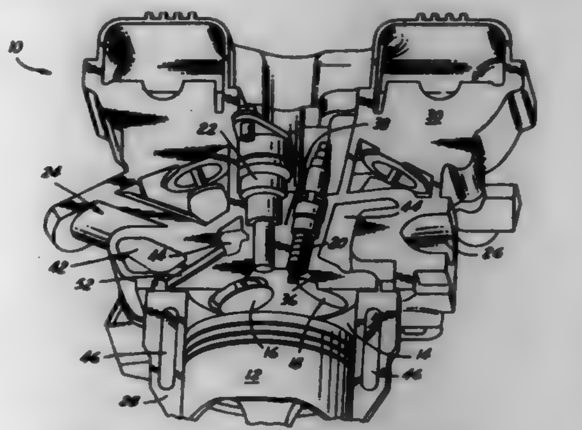

1. A cooling system for a reciprocating multicylinder internal combustion engine, comprising:
a radiator;
a pump for receiving coolant from the radiator;
a cylinder head having a plurality of intake and exhaust ports formed therein, with at least one intake port and one exhaust port servicing each cylinder, with said cylinder head further having a plurality of fuel injectors and spark plugs with at least one fuel injector and one spark plug being housed in a central land extending over each cylinder;
a first cylinder head coolant passage for receiving coolant from the pump, with said first cylinder head coolant passage extending along substantially the entire length of the cylinder head in proximity to the intake ports;
a second cylinder head coolant passage extending along substantially the entire length of the cylinder head in proximity to the central lands which house the fuel injectors and the spark plugs; and
a cylinder block coolant distribution system comprising:
a coolant inlet for receiving coolant discharged by the first cylinder head coolant passage;
at least one primary discharge passage for providing a primary flow of coolant from the cylinder block to the second cylinder head cooling passage, and
a plurality of secondary discharge passages for conducting coolant from the cylinder block to specific regions of the second cylinder head cooling passage.

5,699,761
TWO-STROKE INTERNAL COMBUSTION ENGINE
Shiro Yamaguchi, and Masayoshi Miyamoto, both of Tokyo, Japan, assignors to Kioritz Corporation, Tokyo, Japan
Filed Feb. 26, 1997, Ser. No. 806,451
Claims priority, application Japan, Mar. 1, 1996, 8-045091
Int. Cl.⁶ F02B *33/04*
U.S. Cl. 123—73 A **5 Claims**

1. A two-stroke internal combustion engine comprising:
a crank chamber (22) formed by a cylinder block (12) and a crankcase (20) attached to the cylinder block;

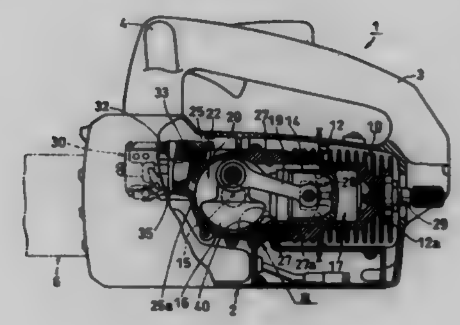

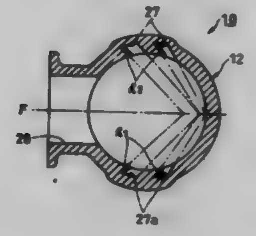

an air-fuel mixture suction opening (25) in communication with the crank chamber for admitting air-fuel mixture to the crank chamber;
an exhaust port (28) formed on the cylinder block;
upper and lower scavenging passages (27, 27) formed at an interior wall of the cylinder block in a longitudinal direction of the cylinder block and symmetrical with respect to a lateral cross section (F) through the exhaust port, with the lower scavenging passage having lesser cross section as compared with the upper scavenging passage; and
a flow restricting portion (40) disposed on an inner peripheral surface (22*a*) of the crank chamber for restricting liquid fuel flow from the crank chamber into the lower scavenging passage.

5,699,762
VALVE OPERATING SYSTEM FOR INTERNAL COMBUSTION ENGINE
Shigeaki Horiuchi, Fujisawa, Japan, assignor to Isuzu Motors Limited, Tokyo, Japan
Filed Dec. 18, 1995, Ser. No. 574,024
Claims priority, application Japan, Dec. 16, 1994, 6-334130
Int. Cl.⁶ F01L *1/26*
U.S. Cl. 123—90.22 **2 Claims**

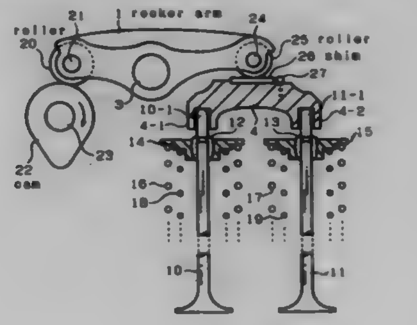

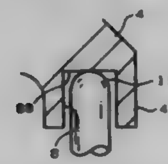

1. A valve operating system for an internal combustion engine, comprising:
two valves;
a valve bridge which operates the two valves;
a rocker arm having first and second ends; and
a roller fitted to the first end of the rocker arm in contact with the valve bridge,
wherein the two valves each have a stem end,
wherein the valve bridge has two sleeves each including a depression which has a flat bottom, and
wherein the stem end of each valve is spherical and is engagedly fitted to the flat bottom of one of the respective sleeves.

5,699,763
AIR INTAKE SYSTEM FOR A MARINE ENGINE
George E. Phillips, Oshkosh; Wayne M. Jaszewski, Jackson; John M. Griffiths, Fond du Lac, and Keith W. Gessner, Kewaskum, all of Wis., assignors to Brunswick Corporation, Lake Forest, Ill.
Filed Oct. 16, 1996, Ser. No. 733,002
Int. Cl.⁶ F02M *35/10*
U.S. Cl. 123—184.21 **12 Claims**

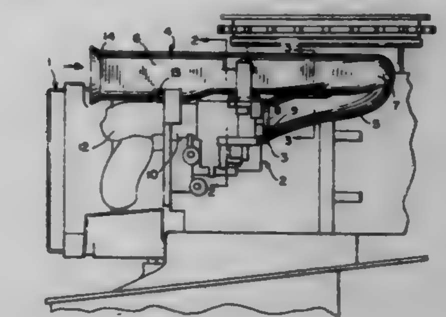

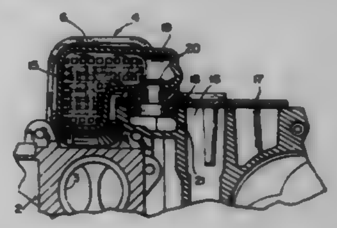

1. In a four stroke outboard marine engine for a boat, a cylinder block having at least one cylinder bore, said engine block having a forward end facing toward a bow of the boat and having a rear end, a fuel delivery unit mounted on the engine block for supplying a combustible mixture of fuel and air to the cylinder bore, and having an air intake opening facing in a forward direction, and an air intake box having a first end facing in a rearward direction and disposed in communication with said intake opening, said air intake box also having a second end facing in a rearward direction and located to the rear of the fuel delivery unit, whereby air from the rear portion of the engine is drawn into said second end and passes through said air box and is discharged through said first end to said fuel delivery unit.

5,699,764
BYPASS TIMER CIRCUIT
Spencer W. Allen, and John K. Apostolides, both of Pittsburgh, Pa., assignors to RPM Industries, Inc., Washington, Pa.
Filed Jan. 11, 1996, Ser. No. 583,977
Int. Cl.⁶ F02N *11/08*
U.S. Cl. 123—196.5 **18 Claims**

1. An electrical circuit for controlling the lubrication of a combustion engine prior to activation of said engine, comprising:
A. a delay circuit electrically connected to a starting mechanism of said engine and to a means for lubricating said engine, wherein said delay circuit prevents activation of said engine until a delay has lapsed; and

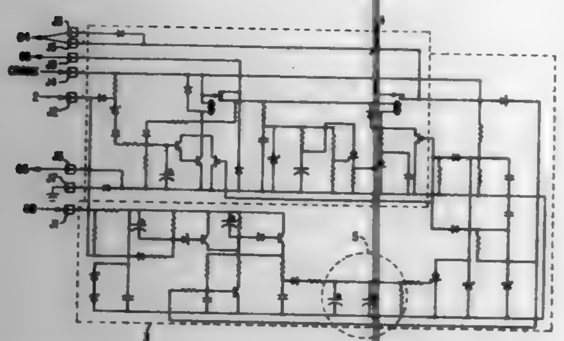

B. a timing circuit electrically connected to said delay circuit and having means for automatically bypassing said delay circuit such that said timing circuit permits the activation of said engine while said timing circuit is activated.

5,699,765

CYLINDER HEAD FOR A UNIFLOW-SCAVENGED TWO-STROKE INTERNAL-COMBUSTION ENGINE

Frank Duvinage, Kirchheim; Markus Paule, Korb; Michael Krämer, Notzingen; Nils Rippert, Waiblingen, and Christian Enderle, Beltmannsweiler, all of Germany, assignors to Daimler-Benz AG, Germany

Filed Dec. 23, 1996, Ser. No. 771,920

Claims priority, application Germany, Dec. 22, 1995, 195 48 342.1

Int. Cl.[6] F02B *25/04*

U.S. Cl. 123—315 10 Claims

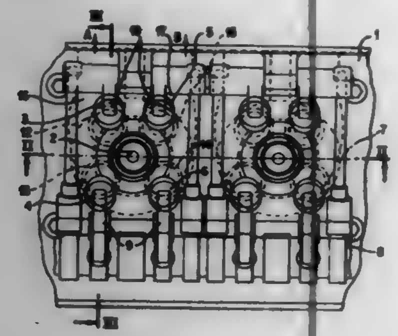

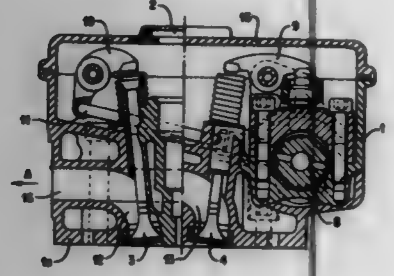

1. A cylinder head for a uniflow-scavenged two-stroke internal-combustion engine, comprising outlet ducts controllable by outlet valves of a camshaft, four outlet valves respectively for each cylinder, respective outlet ducts of the outlet valves being guided to a side of the cylinder head, wherein the camshaft is arranged laterally of the cylinder head situated opposite the outlet side of the outlet ducts, and certain of the outlet valves situated on the side facing away from the camshaft being operable by the camshaft via operating members transversely penetrating the cylinder head.

5,699,766

FUEL INJECTION SYSTEM FOR ENGINE

Chitoshi Saito, Hamamatsu, Japan, assignor to Sanshin Kogyo Kabushiki Kaisha, Shizuoka, Japan

Filed Feb. 28, 1996, Ser. No. 608,556

Claims priority, application Japan, Feb. 28, 1995, 7-040412

Int. Cl.[6] F02B *19/10;* **F02D** *41/34*

U.S. Cl. 123—257 18 Claims

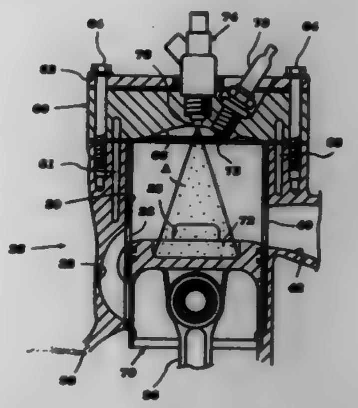

1. An internal combustion engine comprising an engine speed control operator movable within a range of movement such that the position of said engine control operator corresponds to a desired engine speed, at least one variable volume chamber defined by first and second components which move relative to each other, a throttle device communicating with said chamber to regulate intake air flow into said chamber, a throttle actuator arranged to vary the opening degree of said throttle device, said throttle actuator cooperating with said engine control operator, a fuel injector mounted in said first component and arranged to deliver fuel directly into said chamber to form a fuel-air charge, an igniter positioned within said chamber to ignite the fuel-air charge, a speed sensor to detect the speed of said engine, an intake air sensor to detect the amount of intake air flow into said chamber, a operator position sensor to detect the position of said engine control operator, and a controller communicating with said speed sensor, said air intake sensor and said operator position sensor, and being responsive to input signals from said sensors to ascertain the operating condition of said engine and to determine if the operating condition is below a preselected operating condition, said controller further configured to control said throttle actuator to maintain a substantially constant opening degree with the engine operating below said preselected operating condition, to control the fuel injector to maintain a substantially constant amount of fuel injected into said chamber with said engine operating below said preselected operating condition, and to adjust igniting timing of said igniter to provide engine speed corresponding to the position of said engine control operator.

5,699,767

GAS ENGINE

Ikurou Notsu; Hiroshi Matsuda; Nobuo Hamazaki; Yutaka Takada; Tatsuji Miyata, and Akira Nakamura, all of Ageo, Japan, assignors to Nissan Diesel Motor Co., Ltd., Ageo, Japan

PCT No. PCT/JP94/00722, § 371 Date Mar. 7, 1996, § 102(e) Date Mar. 7, 1996, PCT Pub. No. WO95/30086, PCT Pub. Date Nov. 9, 1995

PCT Filed Apr. 28, 1994, Ser. No. 549,767

Int. Cl.[6] F02D *9/06*

U.S. Cl. 123—323 1 Claim

1. An exhaust retarder system for an engine having an exhaust retarder shutter in an exhaust pipe, comprising:

means for terminating fuel feed into said engine upon receipt of an exhaust retarder shutter operation signal;

an oxygen richness sensor provided on said exhaust pipe; and

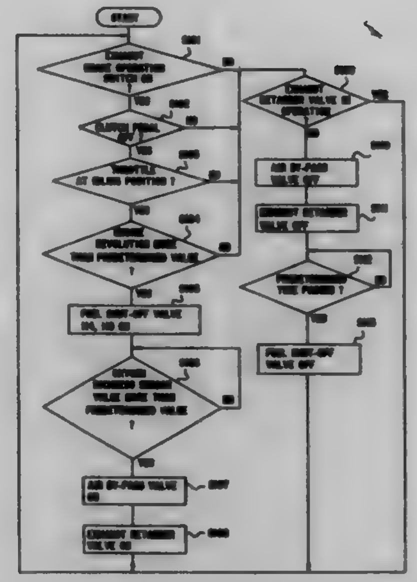

a control system for operating an actuator for said exhaust retarder shutter when, based on a signal from said oxygen richness sensor, sensed oxygen density in said exhaust pipe deviates from a predetermined oxygen range.

5,699,768

THROTTLE CONTROL DEVICE

Yasuo Saito; Shigenori Tahara; Hiroyuki Yamada, all of Hitachinaka, and Atsushi Hohkita, Hitachi, all of Japan, assignors to Hitachi, Ltd., and Hitachi Car Engineering Co., Ltd., both of Japan

Filed Sep. 12, 1996, Ser. No. 713,036

Claims priority, application Japan, Dec. 9, 1995, 7-233981

Int. Cl.[6] F02D *11/04*

U.S. Cl. 123—400 19 Claims

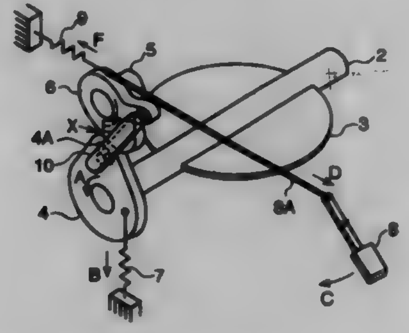

1. A throttle control device comprising:

a throttle valve rotatably supported on an air intake passage for varying an area of the air intake passage;

a throttle lever operatively connected with the throttle valve for rotating the throttle valve;

a drive lever being operatively linked with an accelerator pedal;

a cam mechanism for transmitting rotation of the drive lever to the throttle lever; and

a link mechanism for transmitting the rotation of said drive lever to throttle lever;

wherein the cam mechanism and the link mechanism are operationally switched corresponding to an opening degree of the throttle valve.

5,699,769

CONTROLLER FOR FOUR-STROKE CYCLE INTERNAL-COMBUSTION ENGINE

Masanobu Uchinami; Koichi Yamane, and Wataru Fukui, all of Tokyo, Japan, assignors to Mitsubishi Denki Kabushiki Kaisha, Tokyo, Japan

Filed Apr. 22, 1996, Ser. No. 636,144

Claims priority, application Japan, Oct. 6, 1995, 7-260313

Int. Cl.[6] F02P *7/067*

U.S. Cl. 123—414 15 Claims

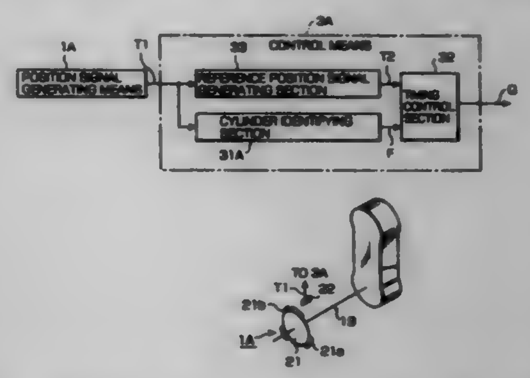

1. A rotational sensing apparatus for an internal combustion engine having an odd number of cylinders, comprising a disc directly connected to a crankshaft of said engine and a sensor opposing the disc, said disc having:

a plurality of position identifying projections equal to a multiple N of the odd number of cylinders and arranged at equal angular spacing around the circumference of the disc, each of said projections having the same circumferential length, and

a cylinder identifying projection positioned between two of the position identifying projections and having a circumferential length different from that of the position identifying projections;

wherein said sensor generates a pulse signal whenever one of the position identifying projections or the cylinder identifying projection passes in front of the sensor.

5,699,770

FUEL INJECTION SYSTEM FOR ENGINE

Shuichi Matsumoto, Oobu; Masatoshi Kuroyanagi; Tetsuya Toyao, both of Kariya; Masashi Murakami, Oobu, and Yukihisa Arakoma, Kariya, all of Japan, assignors to Denso Corporation, Kariya, Japan

Filed Nov. 14, 1996, Ser. No. 748,780

Claims priority, application Japan, Nov. 14, 1995, 7-295731

Int. Cl.[6] F07M *55/02;* **F01M** *9/10*

U.S. Cl. 123—470 8 Claims

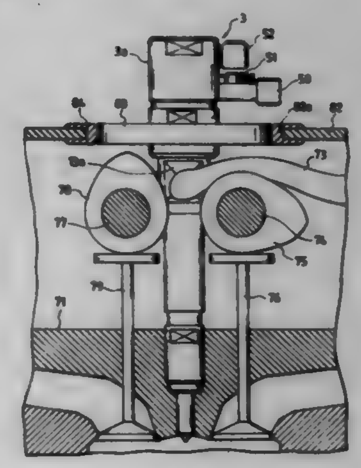

1. A fuel injection apparatus for an engine comprising:

an injector having a given length, including an injector head and an injection nozzle opposite to the injector head for injecting fuel stored in an accumulator chamber under pressure into a cylinder of the engine, the injector head of said injector being exposed outside an engine head cover through a hole;

a solenoid valve controlling injection timing of said injector, said solenoid valve being disposed within the injector head of said injector eccentrically with a longitudinal center line of said injector;

a connector supplying power to said solenoid valve, disposed on the injector head of said injector so as to be exposed outside the engine head cover;

a fuel supply pipe connection connecting a fuel supply pipe with said injector, said fuel supply pipe connection being disposed opposite the injection nozzle of said injector across at least one of camshafts of exhaust and intake valves; and

a fuel supply passage connected to said fuel supply pipe connection for supplying the fuel to the injection nozzle of said injector, said fuel supply passage being formed in a side wall of the injector head of said injector.

5,699,771

FUEL CONTROLLER FOR INTERNAL COMBUSTION ENGINE

Tsuneo Tanabe, Tokyo, Japan, assignor to Mitsubishi Denki Kabushiki Kaisha, Tokyo, Japan

Filed Jul. 10, 1996, Ser. No. 677,528

Claims priority, application Japan, Feb. 19, 1996, 8-030789

Int. Cl.[6] F02D *41/22*

U.S. Cl. 123—479 5 Claims

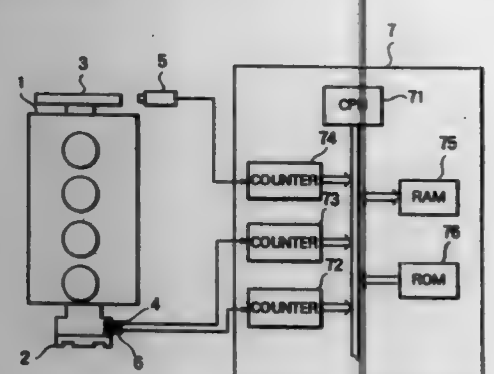

1. A fuel controller for an internal combustion engine, comprising:

a first sensor for detecting a rotational speed of a cam shaft of an internal combustion engine;

a second sensor for detecting a rotational speed of a crank shaft of said internal combustion engine; and

determination means connected to said first and second sensors for determining whether said second sensor is normally operated or not based on an output from said first sensor and an output from said second sensor,

wherein said determination means includes a plurality of counters for counting output pulses output from said first and second sensors, and determines whether said second sensor is normally operated or not based on count values counted by said counters.

5,699,772

FUEL SUPPLY SYSTEM FOR ENGINES WITH FUEL PRESSURE CONTROL

Masao Yonekawa, Kariya; Yoshihiro Majima, Obu; Makoto Miwa, Kariya; Kazuji Minagawa, Tokoname, and Kiyotoshi Oi, Toyohashi, all of Japan, assignors to Nippondenso Co., Ltd., Kariya, Japan

Filed Dec. 22, 1995, Ser. No. 577,928

Claims priority, application Japan, Jan. 17, 1995, 7-005111; Jan. 26, 1995, 7-010937

Int. Cl.[6] F02M *37/04*

U.S. Cl. 123—497 7 Claims

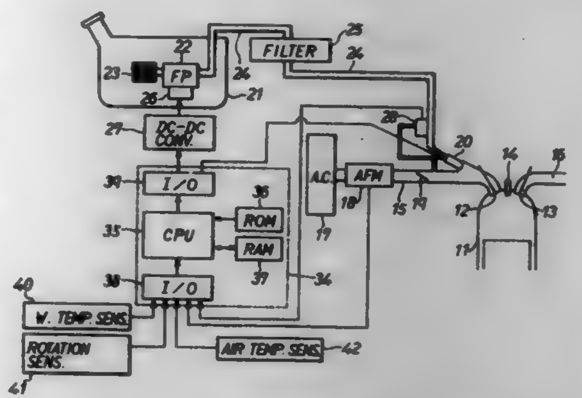

1. A fuel supply system of an internal combustion engine for feeding, under pressure, fuel stored inside a fuel tank by means of a fuel pump to an injector through a fuel pipe and a fuel filter and injecting the fuel to the internal combustion engine from the injector, the system comprising:

a speed variable driving means for speed-variably controlling a discharge pressure of the fuel pump;

a fuel pressure detection means positioned downstream the fuel filter for detecting a fuel pressure inside the fuel pipe;

a pulse width correction means for correcting a width of a pulse to be applied to the injector, according to the fuel pressure detected by the fuel pressure detection means; and

a fuel pressure control means for controlling the speed-variable driving means by feedback, based on the fuel pressure detected by the fuel pressure detection means so that the fuel pressure coincides with a target-pressure, the fuel pressure control means including a means for correcting a correction value to be used to control the speed-variable driving means by the feedback, according to a load applied to the internal combustion engine.

5,699,773

ARRANGEMENT FOR PUMPING FUEL OUT OF A SUPPLY TANK TO AN INTERNAL COMBUSTION ENGINE

Stephan Kleppner, Bretten, and Ansgar Seitz, Neuhausen, both of Germany, assignors to Robert Bosch GmbH, Stuttgart, Germany

Filed Feb. 12, 1997, Ser. No. 776,705

Claims priority, application Germany, Jun. 13, 1995, 195 21 509.5

Int. Cl.[6] F02M *37/04*

U.S. Cl. 123—510 10 Claims

1. An arrangement for pumping fuel out of a supply tank (1) to an internal combustion engine (49), comprising an electrically driven pumping unit (11), which has an intake connector stub (33) and an outlet opening (34) that communicates at least indirectly with a supply line (47) to the engine (49), the pumping unit (11) is disposed in a ram pot (3), the ram pot is retained by a bottom (8) on a bottom (9) of the supply tank (1) by means of a resilient element (7), the ram pot can be filled with fuel from the tank (1) by means of a jet pump (61), an intake opening (65) of the jet pump (61) is preceded by a filter, the filter is formed by at least one ring of formed-protrusions (67), which protrude axially from the bottom (8) of the ram pot (3), to a bottom of the supply tank, a flow cross section is provided between said protrusion which forms a gap filter, protrusions in combination with said ram pot housing enclose an aspiration chamber (69) from which an intake opening (65) of the jet pump (61) aspirates fuel.

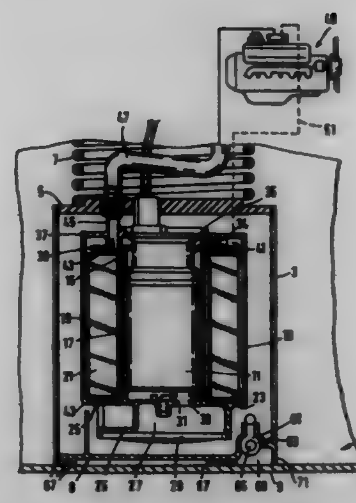

5,699,774

Patent Not Issued For This Number

5,699,775

FAILURE DIAGNOSIS DEVICE OF FUEL EVAPORATION PREVENTIVE APPARATUS

Tadahiro Azuma, Tokyo, Japan, assignor to Mitsubishi Denki Kabushiki Kaisha, Tokyo, Japan

Filed Aug. 13, 1996, Ser. No. 708,480

Claims priority, application Japan, Mar. 4, 1996, 8-46099

Int. Cl.[6] F02M *33/02*

U.S. Cl. 123—520 11 Claims

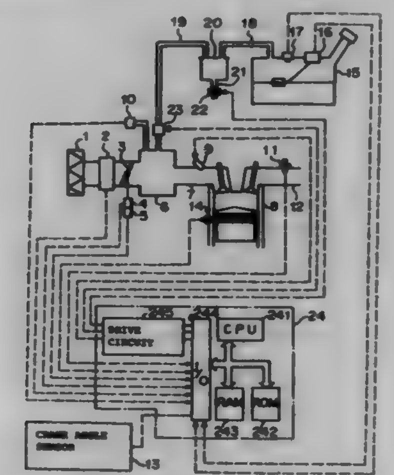

1. A failure diagnosis device of the fuel evaporation preventive apparatus, comprising:

a fuel evaporation prevention apparatus having a canister having an atmospheric hole communicating with outside air and installed in a purge passage connecting a fuel tank with an intake pipe, for preventing evaporation of fuel by adsorbing fuel gas generated in the fuel tank by an adsorber incorporated in the canister and pertinently introducing the adsorbed fuel gas into the intake pipe by controlling a purge control valve in accordance with a running state of an internal combustion engine;

initializing means for controlling an inner pressure of the fuel tank to a predetermined initial pressure;

pressure controlling means for changing the initial pressure to a predetermined target pressure and controlling a purge amount at that time to a constant flow rate by closing the atmospheric hole and driving the purge control valve;

hermetically enclosing means for forming a hermetically enclosed section in the fuel evaporation preventive apparatus by closing both the purge control valve and the atmospheric hole when the inner pressure of the fuel tank reaches the target pressure;

pressure detecting means installed in the hermetically enclosed section for detecting a minimum pressure occurring in the hermetically enclosed section after the purge control valve and the atmospheric hole are closed; and

failure diagnosing means for diagnosing failure of the fuel evaporation preventive apparatus by comparing the minimum pressure in the hermetically enclosed section with a predetermined reference value.

5,699,776

NOZZLE FOR MIXING OXIDIZER WITH FUEL

John M. Wood, and John T. Stewart, both of Wichita Falls, Tex., assignors to Nitrous Express, Inc., Wichita Falls, Tex.

Filed Mar. 6, 1997, Ser. No. 812,606

Int. Cl.[6] F02M *23/00*

U.S. Cl. 123—531 8 Claims

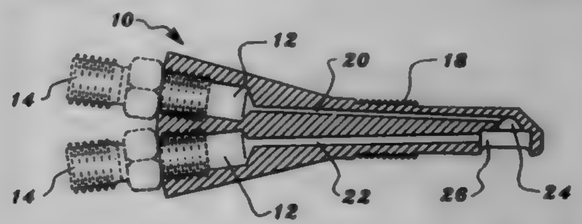

1. In a nitrous oxide supply system of a type having a nozzle for introducing a mixture of fuel and oxidizer into an intake manifold of an internal-combustion engine, said nozzle including two inlet ports, and a body with a fuel-conduit and a nitrous oxide conduit, wherein the improvement comprises:

said nozzle body having a bell-shaped emitter proximate an end of said body,

said nitrous oxide conduit having an outlet communicating with an apex of said bell-shaped emitter,

an atomizing cavity adjacent an outlet of said emitter,

said fuel conduit having an outlet communicating with a side portion of said atomizing cavity, whereby said fuel is entrained by and mixed with a flow of nitrous oxide as the nitrous oxide flows from said bell-shaped emitter through said atomizing cavity.

5,699,777

FUEL SUPPLYING SYSTEM FOR VERTICAL ENGINE WITH MULTIPLE CYLINDERS

Naoki Kawasaki, Hamamatsu; Mitsuhiko Ohta, Shizuoka-ken, and Toshiaki Ikeya, Hamamatsu, all of Japan, assignors to Suzuki Kabushiki Kaisha, Shizuoka-ken, Japan

Filed Sep. 30, 1996, Ser. No. 723,840

Claims priority, application Japan, Nov. 30, 1995, P7-312858

Int. Cl.[6] F02B *13/00*

U.S. Cl. 123—580 4 Claims

1. A fuel supplying system for a vertical engine provided with multiple cylinders arranged in a vertical direction, respectively, in an installed state of the engine and a crankshaft disposed vertically therein, comprising:

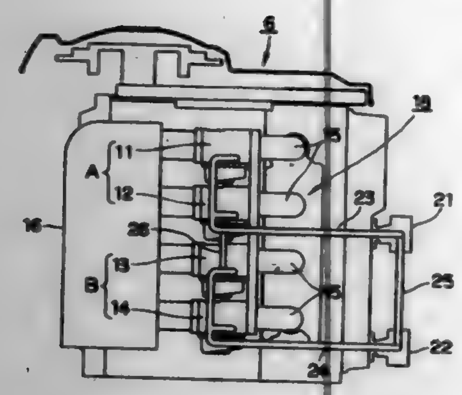

a plurality of fuel supplying means disposed for the cylinders, respectively, said fuel supplying means being divided into plurality of groups;
a plurality of fuel pumps each disposed for each of said groups of the fuel supplying means, said fuel pumps being arranged below the fuel supplying means at a lowest position of the corresponding each group of the fuel supplying means; and
a plurality of fuel diverging means operatively connecting the fuel pumps to the each group of the fuel supplying means, respectively, said fuel diverging means being connected to each other through connecting means.

5,699,778
FUEL EVAPORATIVE EMISSION SUPPRESSING APPARATUS
Tomokazu Muraguchi, and Takuya Matsumoto, both of Tokyo, Japan, assignors to Mitsubishi Jidosha Kogyo Kabushiki Kaisha, Tokyo, Japan
PCT No. PCT/JP95/02565, § 371 Date Aug. 15, 1996, § 102(e) Date Aug. 15, 1996, PCT Pub. No. WO96/18814, PCT Pub. Date Jun. 20, 1996
PCT Filed Dec. 14, 1995, Ser. No. 693,328
Claims priority, application Japan, Dec. 15, 1994, 6-312152
Int. Cl.[6] F02M *25/08*; F02D *41/14*
U.S. Cl. 123—698 13 Claims

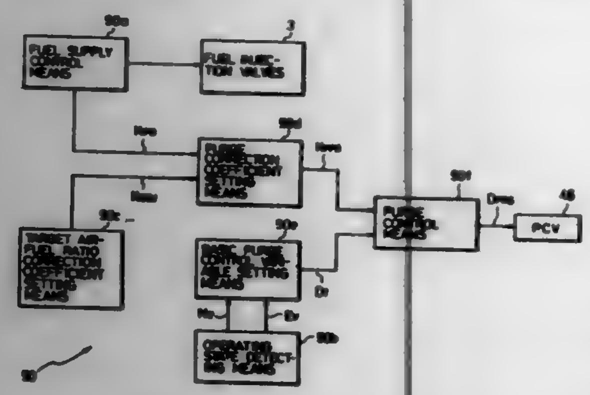

1. A fuel evaporative emission suppressing apparatus for an internal combustion engine whose operation is controlled by fuel supply control means which uses an air-fuel ratio correction coefficient to set a quantity of fuel to be supplied from fuel supply means to the internal combustion engine during air-fuel ratio feedback control in which an air-fuel ratio of a mixture supplied to the internal combustion engine is controlled to a target air-fuel ratio, the apparatus having adsorbing means for adsorbing evaporative fuel gas introduced from a fuel supply system and purge adjusting means for controlling a quantity of introduction of purge air, which contains outside air and evaporative fuel gas separated from the adsorbing means, into an intake passage of the internal combustion engine, comprising:

operating state detecting means for detecting an operating state of the internal combustion engine;
target air-fuel ratio correction coefficient setting means for setting a target air-fuel ratio correction coefficient for purge air introduction period;
purge correction variable setting means for comparing the target air-fuel ratio correction coefficient with an air-fuel ratio correction coefficient which is set by the fuel supply control means during introduction of purge air, and for variably setting a purge correction variable in accordance with a comparison result and the engine operating state detected by said operating state detecting means;
basic purge control variable setting means for setting a basic purge control variable in accordance with the engine operating state detected by said operating state detecting means; and
purge control means for obtaining a purge control variable based on the purge correction variable and the basic purge control variable, and for controlling operation of the purge adjusting means in accordance with the purge control variable.

5,699,779
METHOD OF AND APPARATUS FOR MOVING A MASS
Derek A. Tidman, 6801 Benjamin St., McLean, Va. 22101
Filed Aug. 25, 1995, Ser. No. 519,336
Int. Cl.[6] F41B *3/04*
U.S. Cl. 124—6 55 Claims

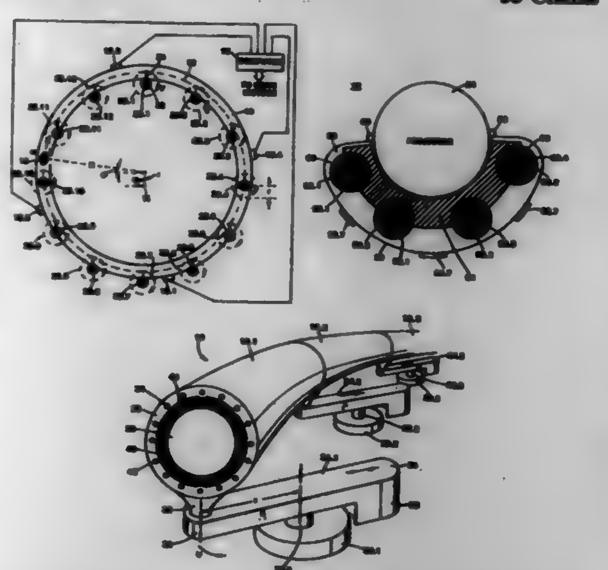

1. A method of gradually and smoothly accelerating or decelerating a mass located in a track having a closed, continuous smooth path comprising the steps of: determining the position of the mass in the track, and controlling movement of the track so a portion of the track where the mass is determined to be located is moved substantially radially along a local radius of curvature of the track.

19. Apparatus for gradually and smoothly accelerating and/or decelerating a mass to a high speed comprising a track having a closed continuous smooth path, the track being arranged and constructed to receive the mass so the mass can traverse the path; means for deriving a signal indicative of the position of the mass relative to the path; and means responsive to the derived signal for moving the track so a portion of the path where the mass is located is moved substantially radially along a local radius of curvature of the track.

52. A mass adapted to be launched from a guide tube including a closed continuous smooth path defining a track, the tube having an outer wall portion, the mass comprising a sled having a wall adapted to mate with an outer wall of the guide tube, a projectile releasably attached to the sled, the sled including a DC power supply connected to a levitating coil assembly, the power supply energizing the coil so that the mass is levitated in the guide tube in response to a magnetic force derived from the coil interacting with an electrically conducting non-magnetic mass on the outer wall portion of the guide tube.

5,699,780
HYDRAULIC IMPULSE SPEARGUN
Laurent C. Bissonnette, 160 Sea Meadow Dr., Portmouth, R.I. 02871
Filed Jun. 17, 1996, Ser. No. 668,033
Int. Cl.[6] F41B *11/00*
U.S. Cl. 124—69 9 Claims

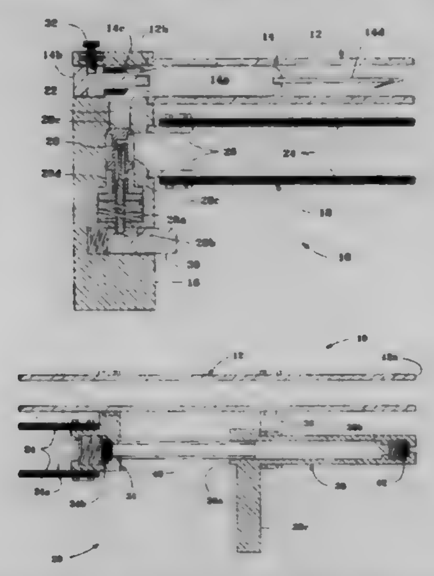

1. An underwater gun for firing a projectile comprising:
a barrel having a breech end, a muzzle end and an internal chamber adapted to receive a projectile;
a stock secured to said barrel adjacent the breech end and defining a passageway communicating with said barrel internal chamber;
an elongated elastomeric bladder having generally opposed openings, the first of said bladder openings communicating with said passageway defined by said stock, a first end of said bladder secured to said stock;
means for pumping water into said bladder via the second of said bladder openings;
a pump guide secured to said barrel for supporting said pumping means and a second end of said bladder; and
control valve means in said passageway for selectively closing and opening said passageway to release water under pressure inside said bladder means into said breech end of said barrel to fire said projectile.

5,699,781
RAPID FIRE COMPRESSED AIR GUN
Lonnie G. Johnson, Smyrna, and John T. Applewhite, Atlanta, both of Ga., assignors to Johnson Research & Development Company, Inc., Smyrna, Ga.
Continuation-in-part of Ser. No. 494,407, Jun. 26, 1995, Pat. No. 5,592,931, Continuation-in-part of Ser. No. 441,229, May 15, 1995, Pat. No. 5,596,978. This application Aug. 19, 1996, Ser. No. 699,431
Int. Cl.[6] F41B *11/00*
U.S. Cl. 124—69 24 Claims

1. A rapid fire compressed air gun comprising:
a magazine in which a plurality of projectiles may be loaded;
a pressure tank;
pump means for compressing air in said pressure tank;
pneumatic control means for controlling the sequential release of pressurized air from said pressure tank to said magazine, said

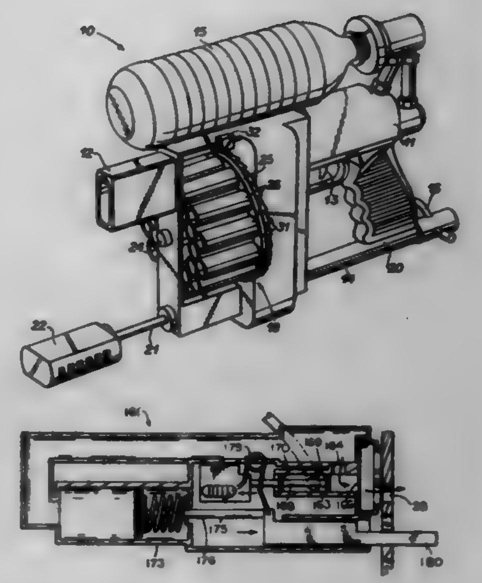

control means includes an elongated manifold having a firing opening in fluid communication with said magazine, an inlet opening in fluid communication with said pressure tank and longitudinally spaced from said firing opening, and an outlet opening longitudinally spaced from said firing opening and said inlet opening, a first piston positioned within said manifold for reciprocal movement between a pressurizing position and a firing position, said first piston having a first seal and a second seal spaced from said first seal, and pressure sensitive pneumatic piston actuation means in fluid communication with said outlet opening for actuating said first piston between said pressurizing position and said firing position in response to pressurized air from said manifold and adapted to contain a supply of pressurized air therein,
trigger means for controlling the flow of pressurized air from said pressure tank to said pneumatic control means;
whereby with the first piston in its pressurizing position the first and second seals are positioned to isolate the inlet and outlet openings therebetween and the second seal is positioned between the outlet opening and the firing opening, so that pressurized air from the pressure tank passes into the manifold through the inlet opening and from the manifold to the pneumatic actuating means through the outlet opening for pressurized actuation of the first piston to its firing position, and with increased pressure the actuation means moves the first piston in its firing position so that the first and second seals isolate the inlet opening therebetween and the outlet opening is in fluid communication with the firing opening, so that the supply of pressurized air flows from the pneumatic actuation means through the outlet opening into the manifold and subsequently out of the manifold through the firing opening into the magazine for firing the projectile therein.

5,699,782
WIRE SAW APPARATUS
Kouhei Toyama, Fukushima, Japan, assignor to Shin-Etsu Handotai Co., Ltd., Tokyo, Japan
Filed May 28, 1996, Ser. No. 654,823
Claims priority, application Japan, May 31, 1995, 7-157004
Int. Cl.[6] B28D *1/08*
U.S. Cl. 125—21 8 Claims

1. A wire saw apparatus comprising:
a wire supply part for supplying a cutting wire to a cutting part, which includes a wire supply reel bobbin;
the cutting part for cutting a work, including a roller with grooves around which the cutting wire is wrapped; and
a wire take-up part for taking up the cutting wire from the cutting part, which includes a wire take-up reel bobbin;

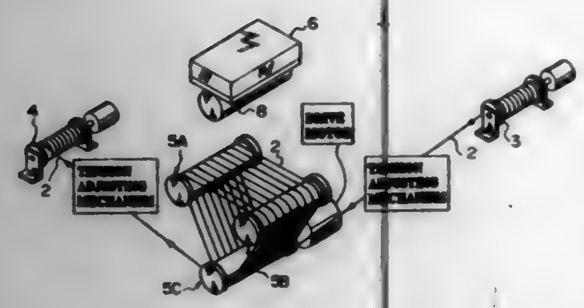

wherein each of the wire supply reel bobbin, the roller with grooves, and the wire take-up reel bobbin is dynamically balanced so that the quantity of dynamic imbalance thereof is not larger than 5 g·cm.

5,699,783
WIRE SAWING METHOD OF REINFORCED CONCRETE STRUCTURE AND GUIDE PULLEY APPARATUS
Setsuo Kubo, Kyoto, Japan, assignor to Kabushiki Kaisha Dymosha, Kyoto, Japan
Continuation of Ser. No. 360,570, Dec. 21, 1994, abandoned. This application Nov. 18, 1996, Ser. No. 751,475
Claims priority, application Japan, Dec. 30, 1993, 5-074866; Feb. 9, 1994, 6-035163
Int. Cl.⁶ B28D *1/08*
U.S. Cl. 125—21 **20 Claims**

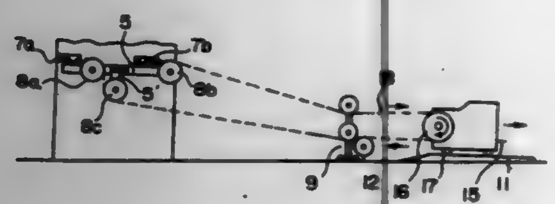

1. A wire sawing method of a reinforced concrete structure, comprising the steps of:
disposing a pair of main guide pulleys on the same plane as a scheduled cutting surface of a reinforced concrete structure;
guiding a cutting wire through said pair of main guide pulleys such that said cutting wire winds around said reinforced concrete structure along said scheduled cutting surface and makes a circulating path via a wire driving pulley of a wire driving device;
disposing an auxiliary guide pulley on a loosening side of said circulating path between said main guide pulleys and said wire driving pulley so as to widen said circulating path; and
driving said cutting wire by said wire driving pulley under a regulated tension and at a regulated traveling speed.

5,699,784
INSULATIVE ADAPTOR FOR A STEAM TABLE PAN
Joseph R. Tippmann, HRC-33, Box 8419, Rapid City, S. Dak. 57701, and Vincent P. Tippmann, 8605 N. River Rd., New Haven, Ind. 46774
Filed Jul. 9, 1996, Ser. No. 678,454
Int. Cl.⁶ F24B *9/00*
U.S. Cl. 126—33 **4 Claims**

1. A device for thermally insulating a portion of the food contents of a pan supported in a base, said base having a source of heat therein for heating said pan, said device comprising: a tubular-shaped sleeve means of thermal insulative material adapted to fit

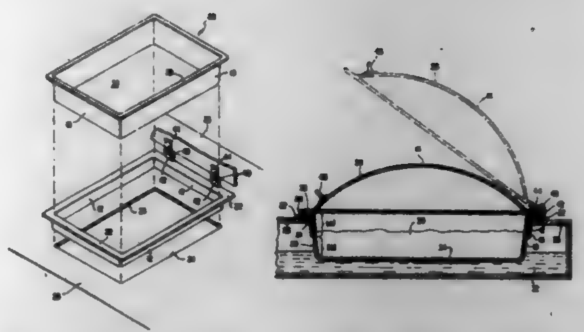

around and encase a portion of the side surfaces of said pan to thereby insulate said encased portion of said pan from said source of heat in said base.

5,699,785
SOLAR ENERGY COLLECTOR
Scott Sparkman, P.O. Box 240471, Honolulu, Hi. 26824-0471
Filed Sep. 26, 1996, Ser. No. 721,359
Int. Cl.⁶ F24J *2/46*
U.S. Cl. 126—623 **17 Claims**

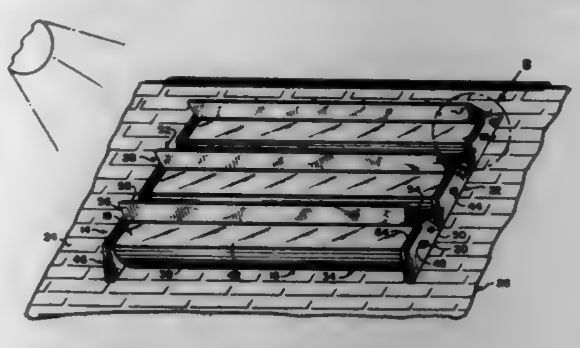

1. A solar energy collector which comprises:
a) a heat absorbing structure which takes in radiant energy and transfers the radiant energy to water carried therein;
b) a main body to encompass said heat absorbing structure, whereby the radiant energy will enter a transparent top portion of said main body to reach said heat absorbing structure;
c) means for carrying the water into and out of said heat absorbing structure;
d) means for supporting opposite ends of said heat absorbing structure within said main body on a roof of a building;
e) means for covering said transparent top portion of said main body, said covering means being a bi-fold lid pivotally connected to said supporting means and sized to fit over said transparent top portion of said main body, when said bi-fold lid is in a closed position, said bi-fold lid including:
i) an elongated rear cover;
ii) an elongated front cover;
iii) a hinge between abutting edges of said rear cover and said front cover;
iv) a pair of pivot pins extending from opposite side edges of said rear cover away from said hinge, so that said pivot pins can extend into said support means to pivot thereabout; and
v) a pair of slide pins extending from opposite side edges of said front cover away from said hinge, so that said slide pins can extend within guide tracks in said support means to ride therein when said bi-fold lid goes into an open position; and
f) means for automatically opening said covering means during daylight hours to expose said transparent top portion, to allow the radiant energy to reach said heat absorbing structure and for automatically closing said covering means during night-time hours, to seal said transparent top portion to keep the radiant energy within said heat absorbing structure in said main body.

5,699,786
ATOMIZER SYSTEM
Hironobu Oshima, and Hiroyuki Matumori, both of Gunma, Japan, assignors to Sanyo Electric Co., Ltd., Moriguchi, Japan
Filed Oct. 30, 1996, Ser. No. 739,966
Claims priority, application Japan, Oct. 31, 1995, 7-305256; Feb. 29, 1996, 8-067507
Int. Cl.⁶ A61M *11/00*
U.S. Cl. 128—200.21 **12 Claims**

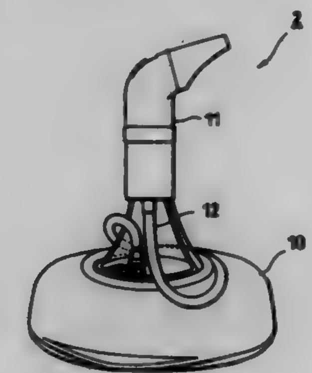

1. An atomizer system comprising:
a main unit operative to charge a portable unit with an amount of pressurized air, said main unit including:
an air compressor for generating pressurized air,
a first pressure accumulation tank for storing a volume of pressurized air generated by said compressor, and
at least one air tube for conducting said pressurized air air from said first pressure accumulation tank to an air outlet; and
a portable unit which includes:
a second pressure accumulation tank for accepting an air charge from said first pressure accumulation tank, said second pressure accumulation tank having at least one sealing valve which is detachably connectable to said air outlet of said first pressure accumulation tank,
a regulator for decompressing the high-pressure air stored in said second pressure accumulation tank to reduce the pressure thereof and to generate low-pressure air having a predetermined pressure, and
at least one atomizer communicating with said regulator on the downstream side thereof for atomizing liquid by means of said low-pressure air.

5,699,787
MOUTHPIECE FOR ENDOTRACHEAL TUBE
Clarence Thompson, Cumberland Anesthesia, P.O. Box 4338, Oneida, Tenn. 37841
Filed Jun. 20, 1996, Ser. No. 665,507
Int. Cl.⁶ A61M *25/01;31/00*
U.S. Cl. 128—200.26 **15 Claims**

1. A mouthpiece for an endotracheal tube comprising:
a bite block of unitary construction having a proximal surface, a distal surface, and a central aperture of a predetermined diameter for receiving an endotracheal tube therethrough;
at least two arresting elements, each of said arresting elements including:
a base portion positionable in a parallel manner along the proximal surface of said bite block; and
an upstanding leg integrally attached at one end to said base portion;
means for pivotally coupling each of said arresting elements to said bite block;
frictional engagement means associated with each of said arresting elements for restricting movement of the endotracheal tube; and

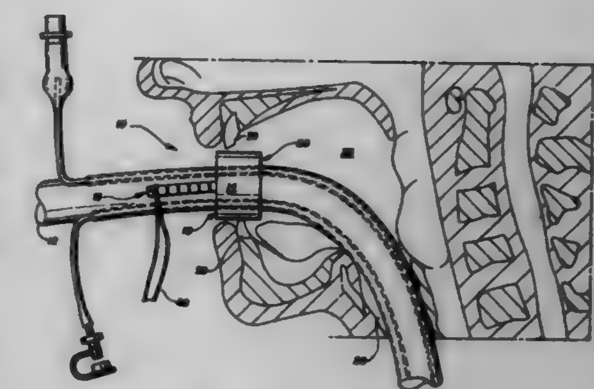

means for detachably engaging each of said arresting elements to said bite block.

5,699,788
ANAESTHETIC SYSTEM WHICH IS AUTOMATICALLY SWITCHED TO TEMPORARY OPERATION AS AN OPEN BREATHING SYSTEM UPON A CHANGE IN AN ANESTHETIC, AND METHOD FOR OPERATING SAME
Anders Lekholm, Bromma, and Leif Wård, Dalarö, both of Sweden, assignors to Siemens Elema AB, Solna, Sweden
Filed May 14, 1996, Ser. No. 645,501
Claims priority, application Sweden, Jun. 2, 1995, 9502034
Int. Cl.⁶ A61M *15/00;16/10;* **A62B** *7/00;* **F16K** *31/02*
U.S. Cl. 128—203.12 **9 Claims**

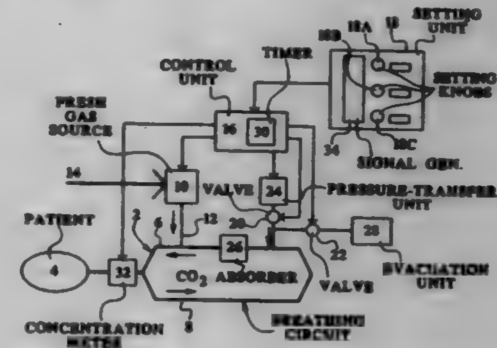

8. A method for operating an anesthetic system having a breathing circuit comprising the steps of:
providing an anesthetic system comprising a breathing circuit and switching means;
operating said breathing circuit as a closed system and administering anesthetic, via said breathing circuit, to a patient connected to said breathing circuit;
initiating a change in anesthetic;
upon said change in anesthetic, said switching means automatically switching said breathing circuit for operation as an open system for a predetermined period of time; and
after expiration of said predetermined period of time, said switching means automatically resetting said breathing circuit for operation as a closed system.

5,699,789
DRY POWDER INHALER
Mark R. Hendricks, 515 Wild Oak Dr., Manitowoc, Wis. 54220
Filed Mar. 11, 1996, Ser. No. 613,413
Int. Cl.⁶ A61M *15/00*
U.S. Cl. 128—203.15 **15 Claims**

1. A dry powder medication inhaler, comprising:
a tubular shell member having a first end and a second end with an air passageway therethrough, an air inlet aperture proxi-

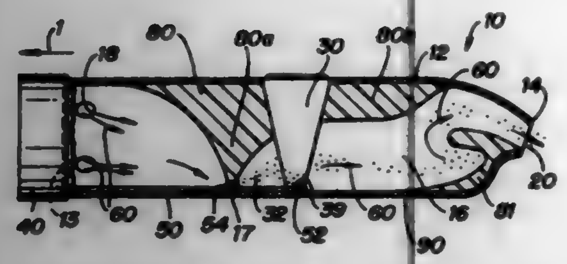

mate the first end and an air outlet proximate the second end, and a chamber adapted for containing a dry powder medicament extending through the shell into the air passageway; the medicant-containing chamber having a first end and a second end, the first end of the chamber having an aperture sized for receiving the medicament and the second end of the chamber having an aperture sized for dispensing the medicament;

an axially moveable member which is affixed to the first end of the shell member, and functional to close the air inlet aperture;

a slidable dosing tray for dispensing the medicament from the medicament-containing chamber into the air passageway; the slidable dosing tray having a first end and a second end, the first end being affixed to the air inlet closure member and the second end including a member adapted to receive a metered dosage amount of the medicament from the dispensing aperture of the medicament-containing chamber;

a baffle positioned between the axially moveable member and the medicament-containing chamber, the baffle being configured to form an orifice sized to create a Venturi effect to cause suction of the medicament into the air flow therethrough;

wherein when the moveable air inlet closure member is moved axially from a closed position to an opened position to expose the air inlet aperture, the slidable dosing tray and the metering member containing the dosage amount of medicament are moved axially and upstream from the orifice, and the second end of the dosing tray seals the dispensing aperture of the storage tray;

and upon inhalation of air by a patient through the air outlet aperture, air flows through the air inlet aperture into the air passageway and mixes with the medicament in the metering member, and the air/medicament mixture passes through the orifice and through the air outlet aperture into the lungs of the patient.

5,699,790
SYSTEM FOR PREDICTING NO_2 CONCENTRATIONS

Duncan P. L. Bathe, Madison; Frederick J. Montgomery, Sun Prarie, and Robin L. Roehl, Janesville, all of Wis., assignors to Ohmeda Inc., Liberty Corner, N.J.

Filed Mar. 21, 1996, Ser. No. 620,063
Int. Cl.[6] A61M *11/00*

U.S. Cl. 128—204.22 20 Claims

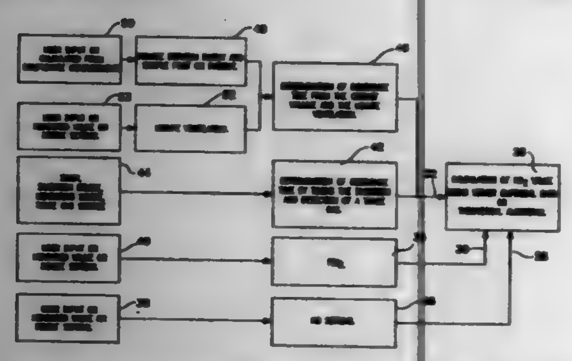

1. A method of estimating the concentration of NO_2 in a mixture of NO and O_2 administered to a patient through a conduit, said method comprising:

(a) providing a supply of gas containing a known concentration of oxygen,

(b) providing a supply of gas having a known concentration of nitric oxide,

(c) mixing the NO containing gas and the O_2 containing gas in the conduit at a point prior to administration to the patient,

(d) administering the mixed gas to a patient at a point downstream of the point of mixing the NO containing gas and the O_2 containing gas.

(e) determining the time elapsed by the mixed gasses passing from the point of mixing the NO containing gas and the O_2 containing gas to the point the mixture is administered to the patient during which time NO_2 is formed in the mixture by the reaction of NO and O_2, and

(f) using the NO concentration, the O_2 concentration and the time determined from step (e) to estimate the concentration of NO_2 in the mixed stream at the point it is administered to the patient.

5,699,791
UNIVERSAL FIT FACE MASK

Corrine A. Sukiennik, Alpharetta; Michael P. Mathis, and Vivian Gray, both of Marietta, all of Ga., assignors to Kimberley Clark Corporation, Roswell, Ga.

Filed Jun. 4, 1996, Ser. No. 658,237
Int. Cl.[6] A62B *7/10*

U.S. Cl. 128—206.13 18 Claims

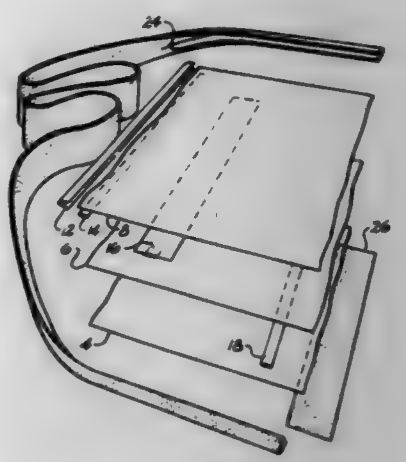

1. A flexible face mask comprising:

a generally rectangular filtration pad having an inner layer and an outer layer, said pad having a top edge, a bottom edge, and a pair of opposing side edges, said bottom edge being folded to define a pouch between opposing portions of said inner layer;

securing means for retaining the mask on the head of a wearer;

a first deformable stay integral with said upper sealed edge;

a second deformable stay secured along said bottom fold;

a third deformable stay secured by said pad a spaced distance from said first stay so as to be opposite the nose and mouth of a wearer when said mask is donned;

an elastomeric strip carried under tension by a terminal flap of a pocket and being in further tensioned communication at either terminus of said strip with a corresponding mid-point of a side edge of said pad;

wherein when said masked is donned, said plurality of stays are adjustable by the wearer to position a periphery of said mask in close conformity to the wearer's face, while further defining a cup-like chamber opposite the nose and mouth of the wearer.

5,699,792
FACE MASK WITH ENHANCED FACIAL SEAL

George D. Reese, Arlington; Albert R. Rich, Jr., Watauga, and Kevin K. Brunson, Argyle, all of Tex., assignors to Tecnol Medical Products, Inc., Fort Worth, Tex.

Continuation of Ser. No. 374,321, Jan. 18, 1995, abandoned, which is a continuation-in-part of Ser. No. 278,930, Jul. 20, 1994, Pat. No. 5,553,608. This application Oct. 9, 1996, Ser. No. 728,040
Int. Cl.[6] A62B *18/08;7/10;23/02;18/02*

U.S. Cl. 128—206.19 22 Claims

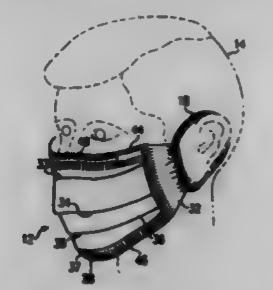

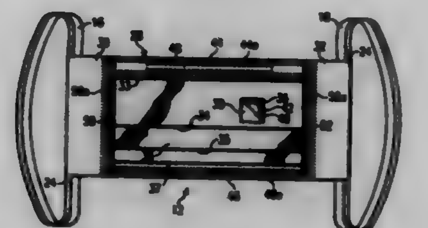

1. A surgical style face mask comprising:

a non-molded, flexible filter body sized to fit over the mouth and nose of a wearer, the filter body having top and bottom edges with the top edge arranged to extend across the nose and cheeks of the wearer and the bottom edge arranged to extend under the chin of the wearer;

an elongated malleable member disposed adjacent to the top edge to allow configuring the top edge to closely fit the contours of the nose and cheeks of the wearer;

the filter body having a pair of lateral edges extending between the top edge and the bottom edge;

a flap attached to each lateral edge of the filter body and arranged to extend from the filter body;

the flaps formed from fluid impervious, flexible material that is different from the material used to form the filter body;

a first ear loop attached to one of the flaps with the first ear loop spaced from the respective lateral edge of the filter body and a second ear loop attached to the other flap with the second ear loop spaced from the respective lateral edge of the filter body;

the first ear loop and the second ear loop arranged to extend from the respective flaps and over one of the ears of the wearer, the first ear loop and the second ear loop cooperating with the respective flaps for urging the top edge and the bottom edge of the filter body into engagement with the face of the wearer to prevent undesired fluid flow between the top edge and the bottom edge and the wearer's face;

the first ear loop and the second ear loop providing means for gathering the respective flaps into sealing contact with the wearer's face to prevent undesired fluid flow between the respective lateral edges of the filter body and adjacent portions of the face of the wearer; and

the first ear loop and the second ear loop and the respective flaps cooperating with each other to increase the number of different sizes and types of faces which may be effectively protected by the associated face mask.

5,699,793
DIAGNOSTIC METHODS FOR MONITORING FUNCTIONAL CHARCTERISTICS OF AN ORGAN INTENDED FOR TRANSPLANTATION

Lauren Brasile, Albany, N.Y., assignor to Breonics Inc., Schenectady, N.Y.

Continuation-in-part of Ser. No. 246,801, May 20, 1994, abandoned. This application Jun. 26, 1996, Ser. No. 670,569
Int. Cl.[6] A61B *5/00*

U.S. Cl. 128—630 23 Claims

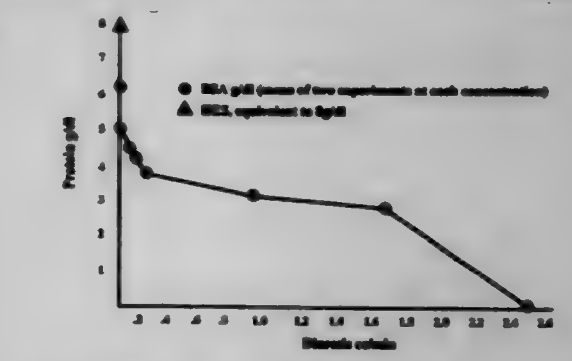

1. A method to prospectively determine potential function of an organ posttransplantation by measuring functional characteristics related to organ metabolism while the organ is being perfused in an ex vivo warm preservation process/system at near normal rate of metabolism, said method comprising measuring parameters of a fluid selected from the group consisting of organ product, circulated perfusate, and a combination thereof, during ex vivo warm preservation; and relating values of the measured parameters to reference interval values, wherein values of measured parameters outside the reference intervals may be indicia of organ damage or injury which may affect function of the organ posttransplantation.

5,699,794
APPARATUS FOR AUTOMATED URINE SEDIMENT SAMPLE HANDLING

Thomas M. Fleck, Woodinville, Wash., assignor to NeoPath, Inc., Redmond, Wash.

Filed Dec. 19, 1995, Ser. No. 574,661
Int. Cl.[6] A61B *5/00*

U.S. Cl. 128—633 9 Claims

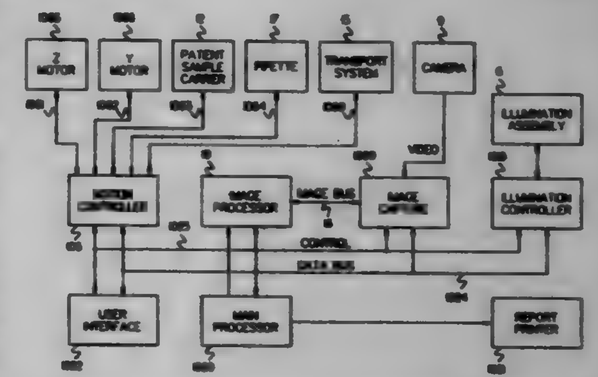

1. An automated apparatus for urine sediment sample handling comprising:

(a) a plurality of settling cells for carrying patient samples;

(b) a sample and cell transport assembly for transporting the plurality of settling cells in one direction through an examination area;

(c) an illumination and camera assembly positioned in the examination area to view one of the plurality of settling cells when one of the plurality of settling cell moves to the examination area, said illumination and camera assembly having a first data output;

(d) an image processing assembly coupled to receive data from said first data output, the image processing assembly having a second data output for carrying processed digital data; and
(e) a processor having a plurality of control lines coupled to said sample and cell transport assembly, illumination and camera assembly, and image processing assembly, wherein said sample and cell transport assembly, illumination and camera assembly, and image processing assembly operate responsively to commands from said processor to handle urine sediment samples.

5,699,795
OPTICAL PROBE FOR THE DETECTION OF CERVICAL NEOPLASIA USING FLUORESCENCE SPECTROSCOPY AND APPARATUS INCORPORATING SAME
Rebecca Richards-Kortum; Costas Pitris, both of Austin, and Michele Follen Mitchell, Houston, all of Tex., assignors to Board of Regents, The University of Texas System, Austin, Tex.
Filed Mar. 31, 1995, Ser. No. 415,356
Int. Cl.^{6} A61B *6/00*
U.S. Cl. 128—634 21 Claims

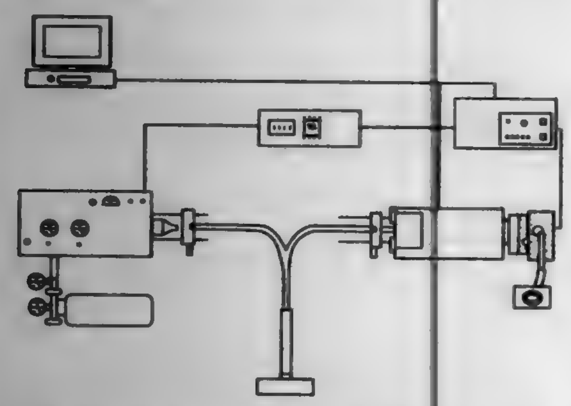

1. An optical probe for cervical examination comprising:
(a) a probe casing having an elongate portion and at least two openings, wherein one of said openings is disposed at a distal tip of said elongate portion of said casing;
(b) a plurality of optical fiber pairs, each of said pairs comprising an excitation fiber and a collection fiber, said optical fibers entering said casing at the non-tip opening and traversing said casing to said tip opening; and
(c) a substantially optically transparent window with a surface structured to conform to the surface of the human cervix, said window covering said tip opening.

5,699,796
HIGH RESOLUTION INTRAVASCULAR SIGNAL DETECTION
Laszlo Littmann, Charlotte, N.C.; Liming Lau, Menlo Park, and Omar Amirana, Palo Alto, both of Calif., assignors to CaRDiMa, Inc., Fremont, Calif.
Continuation-in-part of Ser. No. 188,619, Jan. 27, 1994, Pat. No. 5,509,411, which is a continuation-in-part of Ser. No. 57,294, May 5, 1993, abandoned, which is a continuation-in-part of Ser. No. 43,449, Apr. 5, 1993, abandoned, which is a continuation-in-part of Ser. No. 10,818, Jan. 29, 1993, abandoned. This application May 18, 1995, Ser. No. 443,657
Int. Cl.^{6} A61B *5/04*
U.S. Cl. 128—642 16 Claims

1. An elongated intravascular device for detecting electrical activity, comprising:
a) an elongated shaft having proximal and distal sections with the distal section being more flexible than the proximal section to facilitate advancement through a blood vessel; and

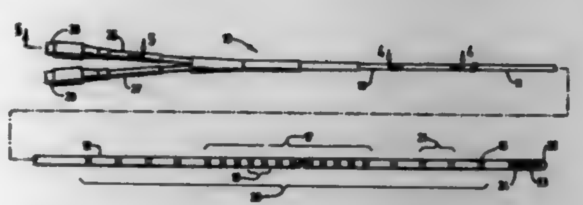

b) a first array of sensing electrodes longitudinally spaced along the distal shaft section with desired interelectrode spacings;
c) a second array of sensing electrodes longitudinally spaced along the distal shaft section with interelectrode spacings greater than the interelectrode spacings of the first array;
d) separate individual electrical conducting means to transmit electrical activity sensed by each of the sensing electrodes in the first and second array to a proximal extremity of the elongated shaft; and
e) means on the proximal extremity of the elongated shaft to electrically connect the individual electrical conducting means to transmit sensed electrical activity to a device for receiving the transmitted sensed electrical activity.

5,699,797
METHOD OF INVESTIGATION OF MICROCIRCULATION FUNCTIONAL DYNAMICS OF PHYSIOLOGICAL LIQUIDS IN SKIN AND APPARATUS FOR ITS REALIZATION
Eduard E. Godik, Washington Township, N.J., assignor to Dynamics Imaging, Inc., Devon, Pa.
PCT No. PCT/US93/09480, § 371 Date Aug. 14, 1995, § 102(e) Date Aug. 14, 1995, PCT Pub. No. WO94/07408, PCT Pub. Date Apr. 14, 1994
PCT Filed Oct. 4, 1993, Ser. No. 411,644
Claims priority, application Russian Federation, Oct. 5, 1992, 5064982
Int. Cl.^{6} A61B *5/05*
U.S. Cl. 128—653.1 23 Claims

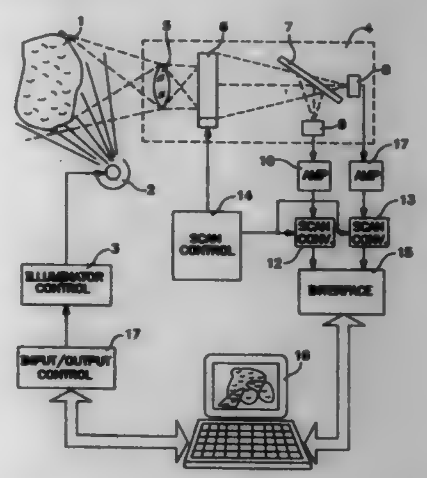

1. An apparatus for investigating the microcirculation of physiological liquids in skin comprising:
a source of electromagnetic radiation for illuminating a preselected area of the skin, said source of electromagnetic radiation provides electromagnetic radiation having a wavelength in a range of 0.3 μm to 2.0 μm;
detecting means optically aligned with said preselected area of the skin for detecting infrared (IR) electromagnetic radiation emitted from the skin and electromagnetic radiation backscattered from the skin and for outputting respective signals therefrom representative of said emitted infrared electromagnetic radiation and said backscattered electromagnetic radiation;

converting means operably connected to said detecting means for converting said signals output therefrom into video signals;
interface means operably connected to said converting means for accumulating temporal variations of said video signals during a preselected period of time in a computer as recorded video signals;
comparing means operably connected to said interface means for determining and quantifying an interrelationship between said temporal variations of said recorded video signals based upon said emitted infrared and said backscattered electromagnetic radiation; and
display means operably connected to said comparing means for presenting said interrelationship between said temporal variations based upon said emitted infrared and said backscattered electromagnetic radiation in the form of a functional map of the microcirculation of physiological liquids in skin for said preselected area of the skin.

5,699,798
METHOD FOR OPTICALLY IMAGING SOLID TUMOR TISSUE
Daryl Hochman, and Michael M. Haglund, both of Seattle, Wash., assignors to University of Washington, Seattle, Wash.
Continuation-in-part of Ser. No. 73,353, Jun. 7, 1993, Pat. No. 5,465,718, which is a continuation-in-part of Ser. No. 894,270, Jun. 8, 1992, Pat. No. 5,438,989, which is a continuation-in-part of Ser. No. 565,454, Aug. 10, 1990, Pat. No. 5,215,095. This application Jun. 7, 1995, Ser. No. 477,468
Int. Cl.^{6} A61B *5/00*
U.S. Cl. 128—653.1 45 Claims

1. A method for detecting margins and dimensions of tumor tissue in an area of interest, comprising:
(a) illuminating the area of interest with an illumination source emitting electromagnetic radiation (emr) having at least one wavelength which interacts with a dye, the emr having a wavelength of from about 450 nm to about 2500 nm;
(b) detecting one or more optical properties of the area of interest using an optical detector;
(c) acquiring and storing a control data set representing the one or more optical properties detected;
(d) administering the dye to the area of interest;
(e) detecting one or more optical properties of the area of interest subsequent to administration of the dye and acquiring a subsequent data set representing the one or more optical properties detected subsequent to administration of the dye;
(f) comparing the subsequent data set with the control data set to produce a comparison data set; and
(g) identifying changes in the one or more optical properties in the comparison data set and thereby identifying areas of solid tumor tissue, wherein the tumor tissue is characterized by one of different rates of dye uptake and different rates of dye perfusion compared to normal tissue.

5,699,799
AUTOMATIC DETERMINATION OF THE CURVED AXIS OF A 3-D TUBE-SHAPED OBJECT IN IMAGE VOLUME
Beilei Xu, Chicago, Ill., and Jianzhong Qian, Princeton Junction, N.J., assignors to Siemens Corporate Research, Inc., Princeton, N.J.
Filed Mar. 26, 1996, Ser. No. 622,076
Int. Cl.^{6} A61B *5/00*
U.S. Cl. 128—653.1 30 Claims

1. In a method for determining a curved axis of a three dimensional tube-like shaped object in an image volume utilizing imaging techniques producing transverse image slices of said image volume with image intensity patterns indicative of the structure of said three dimensional tube-like shaped object and said image volume, in combination therewith the improvement comprising the steps of:

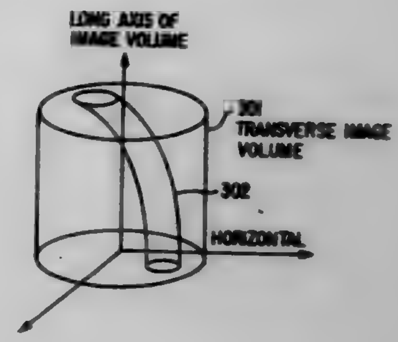

obtaining a plurality of transverse image slices of said three dimensional tube-like shaped object from slicing said image volume in accord with the configuration of said three dimensional tube-like shaped object;
locating center points of consecutive cross sections of said three dimensional tube-like shaped object from each of said plurality of transverse image slices in accord with said image intensity patterns of said plurality of transverse image slices of said three dimensional tube-like shaped object; and,
defining a curved axis of said three dimensional tube-like shaped object with said center points of said consecutive cross sections.

5,699,800
STEREOTACTIC EXAMINATION ARRANGEMENT FOR CONDUCTING MAGNETIC RESONANCE EXAMINATIONS
Sylvia Heywang-Koebrunner, Engelsdorf, Germany, assignor to Siemens Aktiengesellschaft, Munich, Germany
Filed Nov. 29, 1995, Ser. No. 564,643
Claims priority, application Germany, Nov. 30, 1994, 44 42 398.3
Int. Cl.^{6} A61B *5/055*
U.S. Cl. 128—653.2 22 Claims

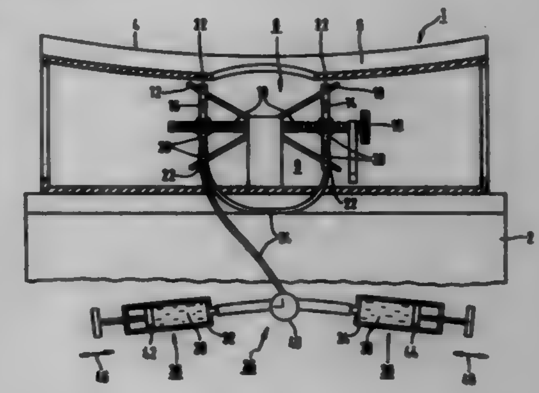

1. A stereotactic examination arrangement for a magnetic resonance imaging apparatus, said arrangement comprising:
holder means for fixing an examination subject in an examination space;
antenna means for receiving magnetic resonance signals from said examination subject in said examination space, said antenna means having a detection region encompassing said examination space;
marker means disposed in said detection region, and having at least one chamber containing a fluid, for producing a mark visible in a magnetic resonance image of said examination subject generated from said magnetic resonance signals obtained by said antenna means; and
refilling means, in uninterrupted fluid connection with said at least one chamber, for selectively filling said chamber with

one of first and second fluids, said first and second fluids having respectively different magnetic resonance behavior.

5,699,801

METHOD OF INTERNAL MAGNETIC RESONANCE IMAGING AND SPECTROSCOPIC ANALYSIS AND ASSOCIATED APPARATUS

Ergin Atalar; Paul A. Bottomley, both of Columbia, and Elias A. Zerhouni, Baltimore, all of Md., assignors to The Johns Hopkins University, Baltimore, Md.

Filed Jun. 1, 1995, Ser. No. 457,833

Int. Cl.[6] **A61B** *5/055*

U.S. Cl. 128—653.2 **85 Claims**

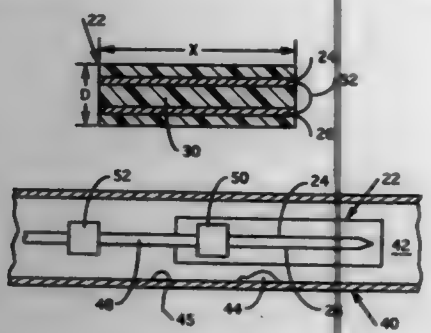

76. A magnetic resonance coil assembly comprising

a resiliently flexible elongated receiver coil for internal magnetic resonance analysis of a region of interest of a specimen by insertion of the receiver coil into the specimen to receive magnetic energy emitted by nuclei disposed within a specimen which is positioned within a main magnetic field responsive to bursts of radio frequency energy and gradient magnetic pulses which are both applied to the specimen and emitting responsive signals, and

said receiver coil having at least one pair of elongated electrically connected conductors disposed within a flexible dielectric material and having means for receiving signals emitted from a specimen and emitting responsive output signals.

5,699,802

MAMMOGRAPHY ANTENNA ARRANGEMENT FOR NMR EXAMINATIONS OF A FEMALE BREAST

Wilhelm Duerr, Erlangen, Germany, assignor to Siemens Aktiengesellschaft, Munich, Germany

Filed Sep. 29, 1995, Ser. No. 536,950

Claims priority, application Germany, Sep. 29, 1994, 44 34 949.1

Int. Cl.[6] **A61B** *5/055*

U.S. Cl. 128—653.5 **20 Claims**

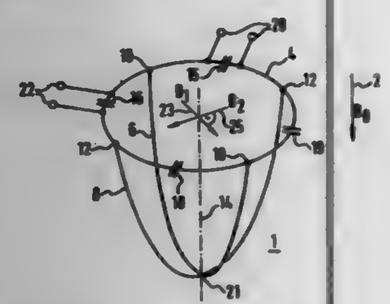

1. A mammography antenna arrangement for conducting a magnetic resonance examination of a female breast comprising:

first and second arcuate conductors, each arcuate conductor having ends and a zenith between said ends;

a further conductor, said further conductor forming a closed circuit and defining a receptacle opening, said ends of said first and second arcuate conductors being electrically connected to said further conductor and adapted to receive a female breast when inserted in said receptacle opening, said first and second arcuate conductors being connected to said further conductor at respective junctions successively disposed along said further conductor with said arcuate conductors respectively disposed in different planes, said planes being disposed perpendicularly to each other, said arcuate conductors being identical and each lying symmetrical about a symmetry axis, said arcuate conductors, being connected to said further conductor with their respective symmetry axes coinciding;

a plurality of capacitors connected in said further conductor with at least one capacitor disposed between each pair of successive junctions;

a first signal terminal connected across a first of said capacitors; and

a second signal terminal connected across a second of said capacitors, said first and second capacitors sharing a common one of said junctions and said first and second signal terminals being decoupled from each other.

5,699,803

METHOD OF PERFORMING ULTRASONIC EXAMINATION

Thomas J. Carodiskey, McVeytown, Pa., assignor to Emerson Electric Co., St. Louis, Mo.

Filed Aug. 9, 1996, Ser. No. 689,416

Int. Cl.[6] **A61B** *8/00*

U.S. Cl. 128—660.01 **8 Claims**

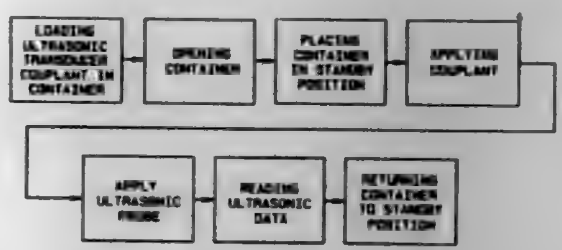

1. A method of applying couplant required for an ultrasonic transducer reading comprising the steps of:

loading ultrasonic transducer couplant in a container having at least a first open end for dispensing the couplant and a structure for closing the open end;

opening the structure closing the first end of the container so couplant is ready to apply;

placing the open end of the container in a vertical standby position, open end down, so that couplant feeds towards the open end and is ready for use;

applying couplant to a test subject having an ultrasonic test;

applying an ultrasonic transducer at the couplant;

reading ultrasonic data produced by said transducer through the couplant;

returning the container to the standby position; and

preventing couplant flow from the container in the standby position through said structure.

5,699,804

THERAPY APPARATUS HAVING A SOURCE OF ACOUSTIC WAVES

Manfred Rattner, Grossenseebach, Germany, assignor to Siemens Aktiengesellschaft, Munich, Germany

Filed May 14, 1996, Ser. No. 645,504

Claims priority, application Germany, Jun. 7, 1995, 195 20 749.1

Int. Cl.[6] **A61B** *8/00*

U.S. Cl. 128—660.03 **6 Claims**

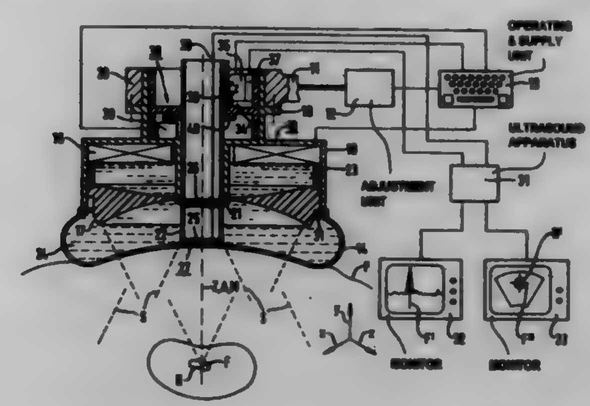

1. A therapy apparatus for use with an X-ray locating system comprising:

a source of acoustic waves for treating a pathology located in a region of a patient, said source of acoustic waves having an X-ray transparent region formed by an opening extending through said source allowing unattenuated passage of X-rays through said opening; and

ultrasound locating means for producing an ultrasound image of said region of said patient containing said pathology, said ultrasound locating means having a totally X-ray transparent diagnostic ultrasound transducer disposed in said opening.

5,699,805

LONGITUDINAL MULTIPLANE ULTRASOUND TRANSDUCER UNDERFLUID CATHETER SYSTEM

James Bernard Seward, and Abdul Jamil Tajik, both of Rochester, Minn., assignors to Mayo Foundation for Medical Education and Research, Rochester, Minn.

Filed Jun. 20, 1996, Ser. No. 668,103

Int. Cl.[6] **A61B** *8/12*

U.S. Cl. 128—662.06 **19 Claims**

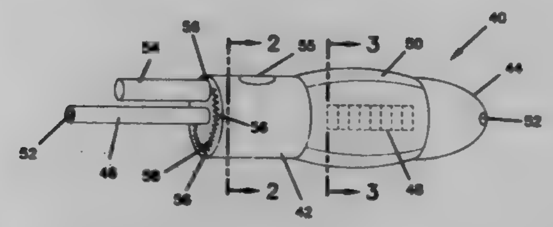

1. A catheter apparatus, comprising:

a catheter including an outer body and a drive shaft receivable in the outer body and rotatable with respect to the outer body;

a transducer phased array mounted on the drive shaft, the transducer phased array being rotatable with the drive shaft, the transducer phased array transmitting signals toward outside of the catheter; and

the outer body having an ultrasound window portion at least partially transparent to the signals, the transducer phased array being longitudinally positionable within the outer body proximate the window portion.

5,699,806

ULTRASOUND SYSTEM WITH NONUNIFORM ROTATION CORRECTOR

Peter Webb, Menlo Park, and Edward Verdonk, San Jose, both of Calif., assignors to Hewlett-Packard Company, Palo Alto, Calif.

Filed Oct. 1, 1996, Ser. No. 724,203

Int. Cl.[6] **A61B** *8/12*

U.S. Cl. 128—667.06 **22 Claims**

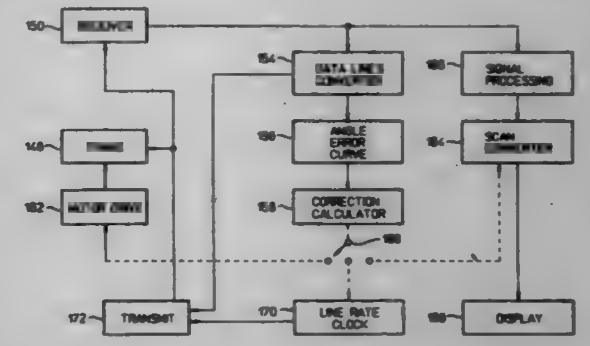

1. An ultrasound apparatus for imaging tissues in the body of a patient from interior of a cavity in the body, comprising:

(a) a probe for entering the cavity, the probe having a distal end to extend into the cavity, a proximal end to extend outside the body, and including mechanical rotatable means including one or more transducers for transmitting sequential ultrasonic pulses in an angular pattern from the distal end based on a target angular pattern and for receiving ultrasonic energy reflected and scattered from the tissues back to the one or more transducers, such that each transmitted ultrasonic pulse results in a received signal (RF-line) converted from said reflected and scattered ultrasonic energy, said RF-line being subsequently used for forming a tissue image;

(b) angle-identification means for determining the transmitted angular pattern by analyzing the RF-lines to determine angular separation therebetween, said angle-identification means being capable of determining the transmitted angular pattern by analyzing the RF-lines alone; and

(c) correction means for correcting distortion of the tissue image caused by the transmitted angular pattern being different from the target angular pattern.

5,699,807

BLOOD PRESSURE MEASURING SYSTEM

Jun Motogi; Yoshio Sakai, and Sunao Takeda, all of Tokyo, Japan, assignors to Nihon Kohden Corporation, Tokyo, Japan

Filed Jul. 26, 1995, Ser. No. 507,709

Claims priority, application Japan, Jul. 26, 1994, 6-173027

Int. Cl.[6] **A61B** *5/02*

U.S. Cl. 128—677 **17 Claims**

1. A blood pressure measuring system comprising:

blood pressure measuring means for measuring a blood pressure by using a pulse wave signal representative of a pulsation of an artery of a living body, said blood pressure measuring means comprising:

pulse wave detecting means for continuously detecting a pulse wave of said pulse wave signal;

storage means for storing data representative of a continuous pulse wave that is outputted from said pulse wave detecting means, said data including discrete data of a pulse amplitude of said pulse wave;

data processing means for reading discrete data of said pulse amplitude of said pulse wave from said storage means, and for processing said discrete data by using a spline function to generate data representative of a smooth continuous line; and

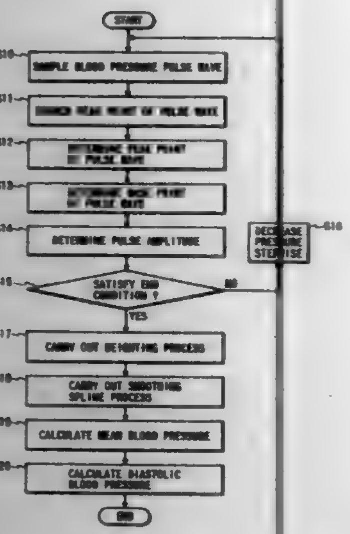

blood pressure calculating means for calculating a blood pressure value on the basis of said data of said smooth continuous line, said blood pressure calculating means including detecting means for detecting a cuff pressure being treated as a diastolic blood pressure at an inflection point of said data representative of said smooth continuous line.

5,699,808

EEG OPERATIVE AND POST-OPERATIVE PATIENT MONITORING SYSTEM AND METHOD

Erwin Roy John, Mamaroneck, N.Y., assignor to New York University, New York, N.Y.

Continuation of Ser. No. 192,836, Feb. 7, 1994, abandoned. This application Mar. 7, 1996, Ser. No. 612,094

Int. Cl.⁶ A61B *5/004*

U.S. Cl. 128—731 **7 Claims**

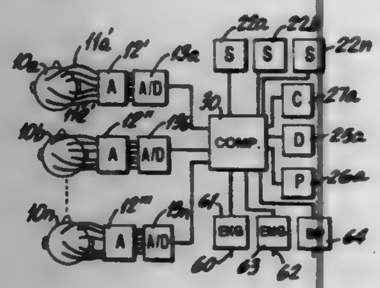

1. A method for simultaneously monitoring a plurality of patients comprising:

(a) removably connecting a set of EEG electrodes to the scalp of each patient and a set of EKG electrodes and a blood pressure sensor to the body of each patient;

(b) presenting a set of stimuli to each patient and amplifying and digitizing the brain wave evoked responses to the stimuli and the patient's ongoing irain wave activity collected from the EEG electrodes to provide a first set of EEG, EKG and blood pressure digital data representing each patient's brain waves, heart activity and blood pressure in the patient's first state and recording the first set of digital data in computer system memory;

(c) subsequently presenting the same set of stimuli to each patient and amplifying and digitizing the brain wave responses to the stimuli and the patient's on-going brain wave activity and heart activity and blood pressure to provide a second set of digital data for each patient;

(d) using the computer system to statistically compare the first and second sets of digital data for each patient on a feature-by-feature basis and providing a warning if a combined multivariant measure is abnormal by being of a difference between the first and second sets of digital data larger than a selected range of differences.

5,699,809

DEVICE AND PROCESS FOR GENERATING AND MEASURING THE SHAPE OF AN ACOUSTIC REFLECTANCE CURVE OF AN EAR

Jerome T. Combs, Wallinford; Hugh W. Busey, Cheshire, and Kresimir Ukraincik, Cromwell, all of Conn., assignors to MDI Instruments, Inc., Woburn, Mass.

Continuation of Ser. No. 378,504, Jan. 26, 1995, abandoned, Ser. No. 378,654, Jan. 26, 1995, abandoned, and Ser. No. 560,523, Nov. 17, 1985, abandoned, which is a continuation of Ser. No. 378,503, Jan. 26, 1995, abandoned. This application Jan. 26, 1996, Ser. No. 592,655

Int. Cl.⁶ A61B *5/00*

U.S. Cl. 128—746 **47 Claims**

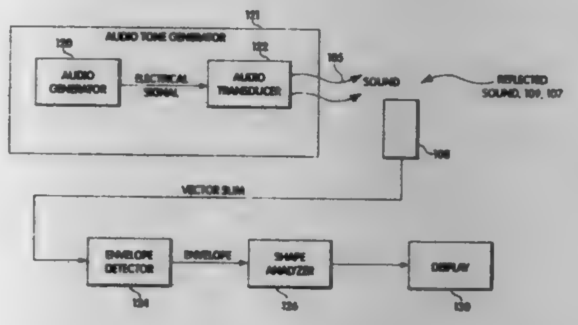

1. A device for analyzing acoustic reflectance of an ear having a tympanic membrane, comprising:

means for measuring acoustic reflectance of components of the ear for a plurality of frequencies by directing sound from a sound source to the tympanic membrane and by detecting reflected sound, wherein the measured acoustic reflectance has a shape; and

means for electronically measuring the shape of a region of the measured acoustic reflectance to obtain an indicator of a condition of the ear, wherein the indicator is substantially independent of a line of sight from the sound source to the tympanic membrane.

5,699,810

PROCEDURE FOR REMOVAL OF SOFT EYE TISSUE

Ioannis G. Pallikaris, c/o University of Crete Medical School, Department of Opthalmology P.O. Box 1352, Heraklion Crete 711 10, Greece

Filed Nov. 10, 1994, Ser. No. 339,243

Int. Cl.⁶ A61B *17/00*

U.S. Cl. 128—898 **19 Claims**

1. A procedure for removing a corneal epithelial layer from an eye, comprising:

exposing a corneal surface of the eye;

rotating a relatively soft and pliable abrading surface about a tool axis;

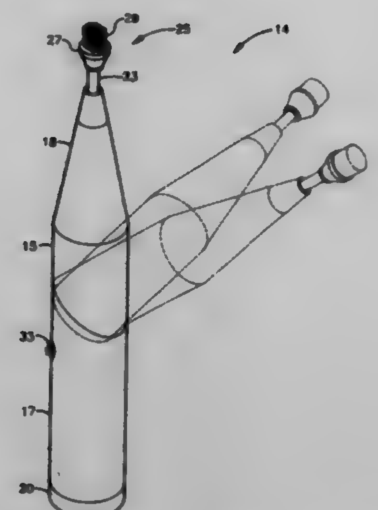

applying the rotating abrading surface to the corneal surface until the corneal epithelial layer has been abraded away, while leaving an underlying stromal layer wholly intact.

5,699,811

USE OF EITELITE TO REDUCE SIDESTREAM SMOKE

John B. Paine, III, Midlothian, Va., assignor to Philip Morris Incorporated, New York, N.Y.

Filed Aug. 8, 1996, Ser. No. 689,433

Int. Cl.⁶ A24D *1/02*

U.S. Cl. 131—365 **15 Claims**

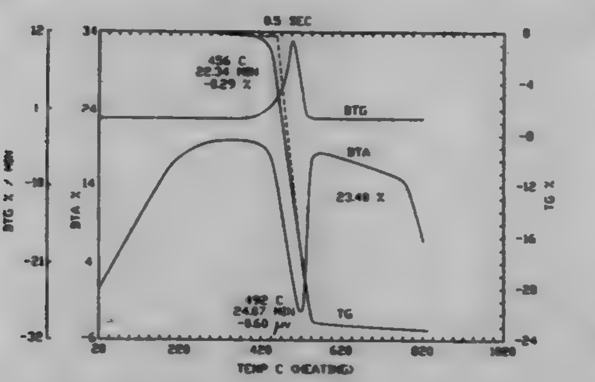

1. A paper wrapper for a smoking article comprising as filler eitelite in an amount sufficient to substantially reduce the amount of sidestream smoke produced by the burning smoking article while providing the smoking article with ash coherence.

5,699,812

SMOKING PRODUCT

Larry Bowen, Orangeville; George Edward Ayres, Campbellville; Gary Black, Brampton, and Jacques Daoust, St. Sophie, all of Canada, assignors to Rothmans, Benson & Hedges Inc.

Continuation of Ser. No. 181,975, Jan. 18, 1994, Pat. No. 5,462,073. This application Jun. 2, 1995, Ser. No. 460,276

Claims priority, application United Kingdom, Jan. 5, 1991, 9100196; Feb. 14, 1991, 9103202; Apr. 24, 1991, 9108783; May 16, 1991, 9110559; Jul. 5, 1991, 9114598

Int. Cl.⁶ A24B *15/25*

U.S. Cl. 131—374 **38 Claims**

1. A smoking product having a smoking quality closely approximating that of a cigarette having a conventional paper wrapper, which comprises:

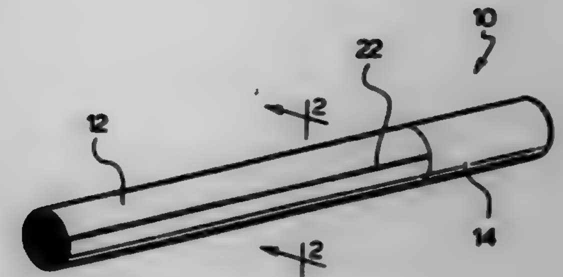

a tobacco filler rod, and

a wrapper enclosing the tobacco filler rod,

said wrapper comprising an inner binder layer of reconstituted tobacco sheet and an outer wrapper of conventional cigarette paper,

said reconstituted tobacco sheet being formed by a paper-making process in which water-soluble material extracted in the sheet making process is not added back to the sheet unless in an amount which does not exceed about 20 wt % of the reconstituted sheet,

said cigarette exhibiting a decrease in sidestream smoke production of about 30 to about 60% in comparison to a cigarette having the conventional cigarette wrapper.

5,699,813

ARTIFICIAL FINGERNAIL WITH INLAY

George H. Carroll, 853 Via Alondra, Camarillo, Calif. 93012

Filed Aug. 9, 1996, Ser. No. 694,511

Int. Cl.⁶ A45D *29/00*

U.S. Cl. 132—73 **14 Claims**

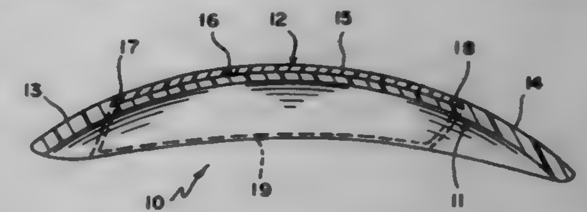

1. An artificial fingernail having an inlay in a top surface thereof, comprising:

a base member having a fingernail shape with a top surface;

a recessed area in the top surface; and

an inlay in the recessed area in the top surface of the base member to produce a desired cosmetic effect.

5,699,814

CURVED TOOTHED HAIRCLIP

Christian Potut, Arbent, France, assignor to C.S.P. Diffusion, société anonyme, Arbent, France

Filed Mar. 7, 1996, Ser. No. 612,325

Claims priority, application France, Sep. 21, 1995, 95 11245

Int. Cl.⁶ A45D *8/20*

U.S. Cl. 132—277 **10 Claims**

1. Hairclip having first and second elongate branches with respective first and second inside faces facing each other, respective outside faces and respective first and second lateral edges, the first and second branches being hinged together at their first ends about a hinge axis enabling the first and second branches to pivot between a close together position in which the first and second inside faces are generally parallel to each other and a spaced apart position in which the first and second inside faces are angularly offset from each other, the first and second branches being adapted to be separably fastened together at their second ends in the close

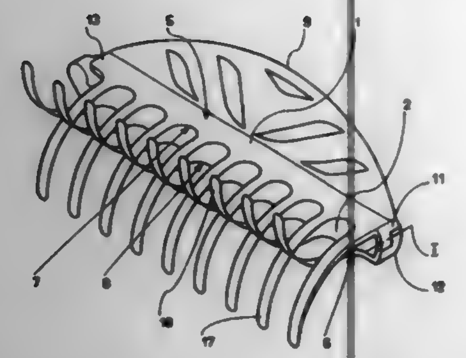

together position in which the first and second branches can grip a lock of hair between their respective inside faces, wherein each of the first and second branches has curved teeth extending laterally from the first lateral edge and curving towards the other of the first and second branches, the curved teeth of each of the first and second branches being interdigitated with the curved teeth of another of the first and second branches so that in the close together position the curved teeth pass through said lock of hair.

5,699,815
HAIR CLIP
Toshiyuki Furukawa, Osaka, Japan, assignor to Lucky Corporation Co., Ltd., Osaka, Japan
Filed Apr. 16, 1996, Ser. No. 633,178
Int. Cl.⁶ A45D *8/28*
U.S. Cl. 132—279 **6 Claims**

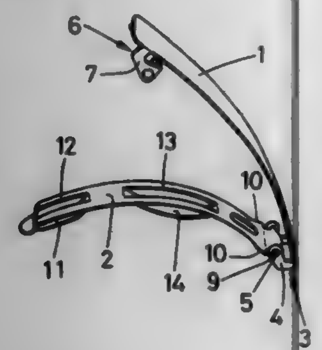

1. A hair clip comprising:
a base plate (1);
a clip plate (2) curving to bulge out toward said plate (1) so as to press hair against said base plate (1) and hold hair between said base plate (1) and said clip plate (2) when said base plate (1) and said clip plate (2) engage each other;
an axis part (3) facing said clip plate (2) and being provided on one end of said base plate (1);
a fastner part (6) facing said clip plate (2) and being provided on the other end of said base plate (1),
said fastener part (6) comprising clip arms (7), which have enough length to deform flexibly to release the engagement between said base plate (1) and said lip plate (2), and said clip arms (7) extending from said base plate (1) toward said axis part (3); and
where one end of said clip plate (2) is connected pivotally to said axis part (3), and the other end of said clip plate (2) is snappable into said fastener part (6) to obtain said engagement and releasable from said fastner part (6).

5,699,816
FINGERNAIL PROTECTOR
Cheryl Ann Banes, Chicago, and Joseph Born, Lincolnwood, both of Ill., assignors to Cheryiann Company, Skokie, Ill.
Filed Jan. 11, 1996, Ser. No. 584,250
Int. Cl.⁶ A45D *29/00*
U.S. Cl. 132—285 **33 Claims**

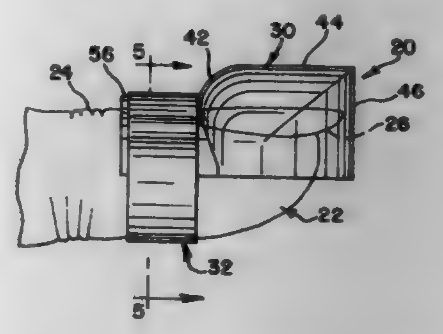

1. A device for protecting paint or polish on a nail of a finger while the paint or polish is drying after a manicure comprising:
a substantially rigid fingernail protective shield adapted to cover the nail; and
means for adjustably and tightly locking said protective shield on said finger to rigidly mount the device on the finger and prevent the shield from contacting the nail during normal use, said locking means including mating ratchet teeth.

5,699,817
TURBULENT FLOW CONDUIT CLEANING APPARATUS
Peter J. Bankert, Birmingham, Ill.; Mark Perry, Wixom, Mich., and Richard Grady, Eden Prairie, Minn., assignors to Graco Inc, Minneapolis, Minn.
Filed May 11, 1995, Ser. No. 439,330
Int. Cl.⁶ B08B *9/06*
U.S. Cl. 134—102.2 **1 Claim**

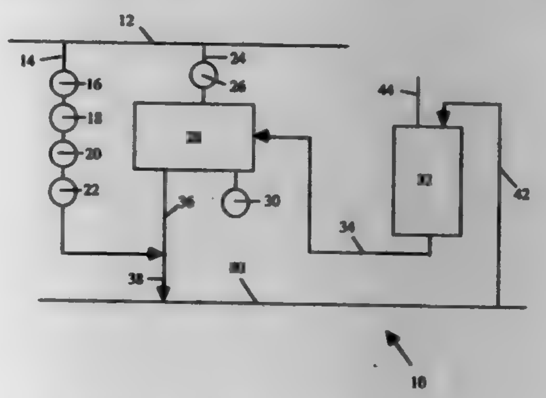

1. An apparatus for cleaning a fluid conduit, said apparatus comprising:
means for supplying a pressure regulated compressed gas to said conduit; and
pumping means for supplying a flow of pressurized solvent to said conduit to be cleaned, said pumping means being capable of variable speeds which provide a constant speed and positive displacement at any predetermined setting in order to produce a turbulent flow cleaning action in said conduit and comprising an air operated reciprocating pump having a fluid outlet and an air exhaust and having means restricting said air exhaust so as to provide a constant output volume at any given setting of said restricting means independent of pressure downstream of said fluid outlet.

5,699,818
PERSONAL SAFETY SYSTEM
Roy B. Carpenter, Jr., Boulder, Colo., assignor to Lightning Eliminators & Consultants, Inc., Boulder, Colo.
Filed Nov. 16, 1995, Ser. No. 590,706
Int Cl.⁶ A45B *23/00*
U.S. Cl. 135—16 **6 Claims**

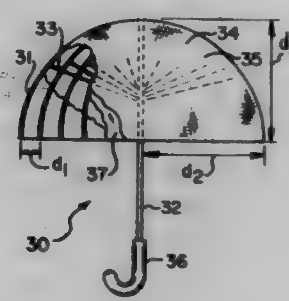

1. A lightning shield comprising:
a hemispherical dome having a smooth outer surface approximating a perfect hemisphere having a diameter large enough to cover a user's shoulders and head;
said outer surface further comprising a conductive material;
a support means functioning to support the hemispherical dome over a person's head and shoulders; and
a lightning ground streamer prevention means comprising a smooth, domed metallic surface on said hemispherical dome.

5,699,819
REDUCED IMPACT CANE
Fred M. Simons, 23 Lighthouse Rd., Gay Head, Mass. 02535
Filed Dec. 9, 1996, Ser. No. 762,280
Int. Cl.⁶ A45B *9/04*
U.S. Cl. 135—82 **10 Claims**

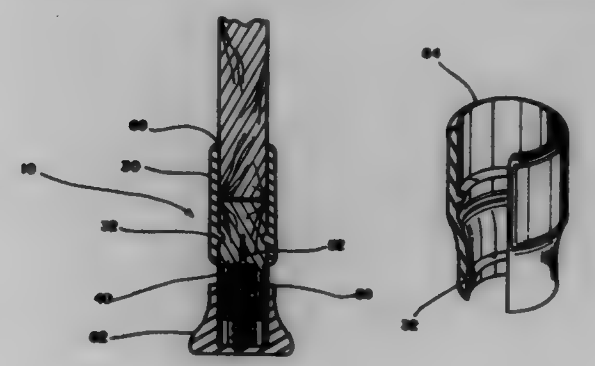

2. A reduced impact cane attachment, comprising:
a spring connector having first end and a second end;
a connecting sleeve having a first end and a second end, said connecting sleeve second end being disposed around said first end of said spring connector;
a collar disposed around said second end of said spring connector;
a tip having a first end, said first end of said tip being disposed around said collar;
a spring being accepted by second end of said spring connector and said spring being coupled to said tip; and
wherein said connecting sleeve second end includes a ridge, said ridge being accepted by said first end of spring connector.

5,699,820
OUTDOOR SLEEPING SYSTEM WITH DETACHABLE SLEEPING BAG
David L. Evans, and Dena K. Evans, both of 7956 Thompson Creek Rd., Applegate, Oreg. 97530
Filed Mar. 11, 1996, Ser. No. 613,288
Int. Cl.⁶ A47G *9/00*
U.S. Cl. 135—96 **5 Claims**

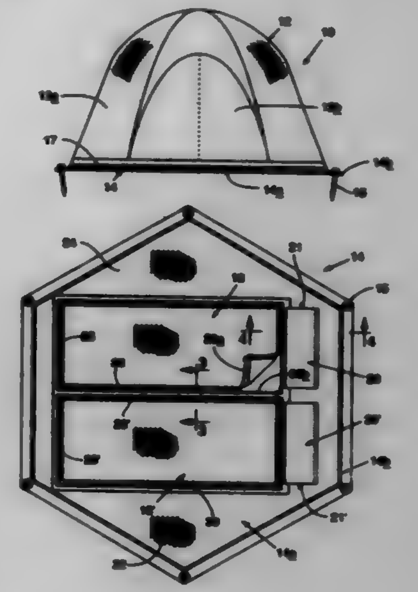

1. A portable outdoor sleeping system comprising:
a sleeping bag having a closable shell with a perimeter flap to which a first slide fastener element is fixed; and
a tent structure including a shelter portion and a ground cover sheet, said ground cover sheet being provided with a sleeping bag outline flap which includes second slide fastener element capable of mating relationship with said first slide fastener element to detachably secure said sleeping bag to said floor.

5,699,821
CONTROL OF FLUID FLOW
Joseph R. Paradis, P.O. Box 22238, Hilton Hd Is., S.C. 29925
Continuation-in-part of Ser. No. 135,673, Oct. 13, 1993, Pat. No. 5,509,433. This application Aug. 15, 1994, Ser. No. 290,136
Int. Cl.⁶ A61M *5/00*
U.S. Cl. 137—1 **20 Claims**

11. A method of controlling fluid flow which comprises the steps of:
(1) sealing an inlet by a normally open slotted flexible stopper which compresses into said inlet, said inlet closing the slot of said stopper; and

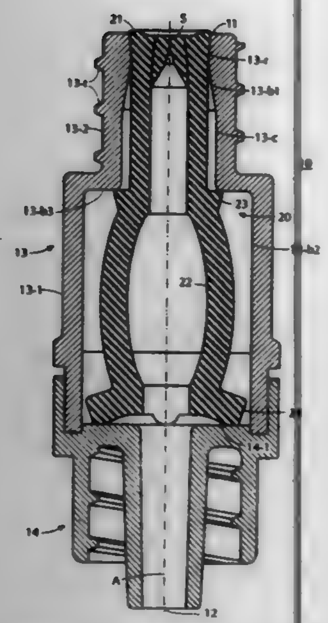

(2) slidably depressing said stopper to open the slot and permit the flow of fluid therethrough.

5,699,822
BREAKAWAY COUPLING DEVICE
James Bodhaine, Houston, Tex., assignor to Vita International, Inc., Houston, Tex.
Filed May 6, 1996, Ser. No. 643,370
Int. Cl.⁶ F16L *29/00*
U.S. Cl. 137—68.15 **12 Claims**

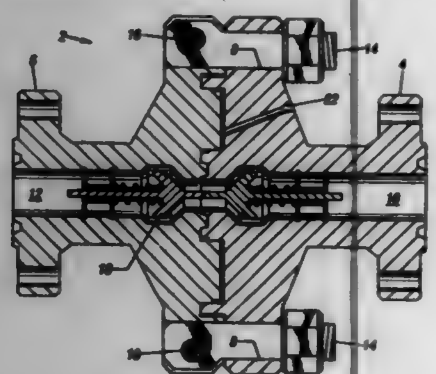

1. A breakaway coupling device comprising:
a female valve body, a plurality of boltholes extending therethrough, and a plurality of boreholes extending therethrough, wherein said female valve body further defines a first cavity traversing the female valve body;
a male valve body, a plurality of flange pairs, and a plurality of boreholes aligned with the boreholes in the female valve body, wherein said male valve body further defines a second cavity traversing the male valve body;
a plurality of tie bolts being attached to said female valve body through said plurality of boltholes, wherein said tie bolts are received by said plurality of flange pairs on said male valve body;
a plurality of shear pins, wherein each one of said plurality of shear pin, intersects each flange pair and each one of said plurality of tie bolts at an angle perpendicular to said tie bolts thereby connecting said male valve body to said female valve body;
a check valve being received by the first cavity and the second cavity;
a plurality of guide pins closely received by the boreholes in the male valve body and the female valve body; and
a channel being defined by said female valve body;
wherein the guide pins are covered by a Teflon® sleeve.

5,699,823
BREAKAWAY COUPLING
Jack Gall Thomson, Nottingham, United Kingdom, assignor to Dover Corp., New York, N.Y.
Filed Sep. 20, 1996, Ser. No. 717,284
Claims priority, application United Kingdom, Sep. 20, 1995, 9519193; May 8, 1996, 9609589
Int. Cl.⁶ F16L *37/28*
U.S. Cl. 137—68.15 **10 Claims**

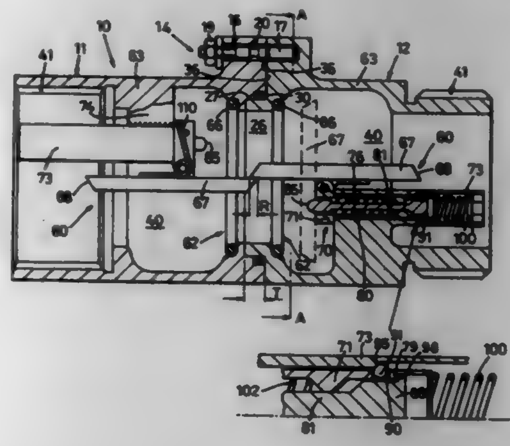

1. A breakaway coupling including first and second coupling parts secured together by releasable means, the releasable means permitting separation of the coupling parts in a given direction when exposed to a separating force in excess of a predetermined force in said direction, at least one of the coupling parts including valve means, the valve means being normally retained at an open position and being movable to a closed position when said coupling parts move apart in said direction, the valve means comprising an annular valve seat formed in said one coupling part, a valve element which when seated on the valve seat prevents fluid flow through said one coupling part, the valve element being movably mounted within the coupling part for movement between open and closed positions, the valve element when at said open position being spaced from the valve seat to permit flow of fluid through the coupling part and when at said closed position being seated upon the valve seat to prevent fluid flow through the coupling part, the valve element being pivotally mounted on an elongate support for movement from the open position to an intermediate position whereat it is opposed to said valve seat but spaced therefrom in said given direction, the support extending longitudinally in said given direction and being movable in said given direction between a first position whereat the support locates the valve element at its open position and a second position whereat the support locates the valve element at its closed position, trigger release means for retaining the support at its first position, the valve element being co-operable with the trigger release means to cause release of the support when the valve element moves to its intermediate position to thereby enable the support to move to its second position and the valve element to move to its closed position.

5,699,824
ELECTRICAL-PNEUMATIC SYSTEM
Lothar Kemmler, Moerfelden-Walldorf, and Stefan Kolbenschlag, Darmstadt, both of Germany, assignors to Samson Aktiengesellschaft, Frankfurt am Main, Germany
Filed Sep. 13, 1996, Ser. No. 712,518
Claims priority, application Germany, Sep. 14, 1995, 195 34 017.5
Int. Cl.⁶ G05B *11/50*
U.S. Cl. 137—85 **18 Claims**

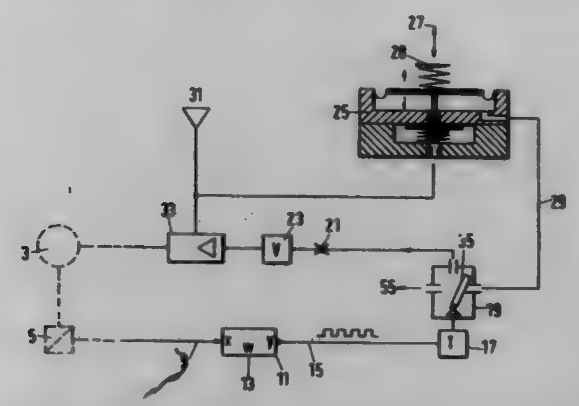

1. An electrical-pneumatic system consisting of a main unit having a pneumatic booster, an electrical-pneumatic pre-control unit, and a controller having an input terminal for reference variable W, which indicates a target value, an input terminal for a regulating variable X, which indicates an actual value and an output terminal for a manipulated variable Y, which indicates a control value in the form of a pulse-width modulated signal, the electrical-pneumatic pre-control unit including a drive unit for receiving the pulse-width modulated signal from the controller, a 3/2 directional control valve having a valve member switched mechanically between two end positions in response to a drive signal from the drive unit, said 3/2 directional control valve having an input connected with an adjustable pressure reducer means for adjusting the admission pressure at the input of the valve to change the pressure applied to the booster, an output connected to means for smoothing of the modulated pressure at the output of the 3/2 directional control valve, said means for smoothing including a throttle and a downstream connected volume, said pneumatic booster having an input connected downstream of the volume and an output for the control pressure, an electrical measurement sensor means for determining the output of the control pressure of the pneumatic booster and being connected to the controller to provide a feedback signal as the regulating variable X depending on the control pressure.

5,699,825
DOUBLE SEAT FLOW CONTROL VALVE
Larry A. Norton, Elkhorn, Wis., assignor to United Dominion Industries, Inc., Charlotte, N.C.
Filed Nov. 14, 1995, Ser. No. 557,453
Int. Cl.⁶ B08B *9/06*; **F16K** *31/222*
U.S. Cl. 137—238 **8 Claims**

1. A valve unit, comprising:
a body including first and second valve seats and defining first and second product flow paths, a leakage flow path, and a connecting passageway between said first and said second product flow paths;
first and second valve disks movable between respective open and closed positions, said first and said second valve disks cooperating with said first and said second valve seats to permit and to block flows between said first and said second product flow paths and said connecting passageway, respectively;
actuator means including pressure chamber means with at least a first, a second and a third pressure chamber for containing a pressurized fluid, and for containing first, second and third pistons and first, second and third inlet ports for receiving respective pressure signals associated with the first, second and third pressure chambers, respectively, a first pressure chamber located between the second and the third pistons, the second pressure chamber located between the first and the second pistons and the third piston located between the first and the third pressure chambers, the first piston coupled to the second valve disk to open the second valve disk, the second piston responsive to an opening signal in the first pressure chamber to engage the first piston so as to open the second valve disk, and the first piston responsive to a second bleed signal in the second pressure chamber to at least partly open the second valve disk while concurrently applying the second bleed signal in the second pressure chamber to the second piston to apply a closing force to the first valve disk so that the first valve disk remains closed and the third piston responsive to a first bleed signal in the third pressure chamber to at least partly open the first valve disk while permitting the second valve disk to remain closed.

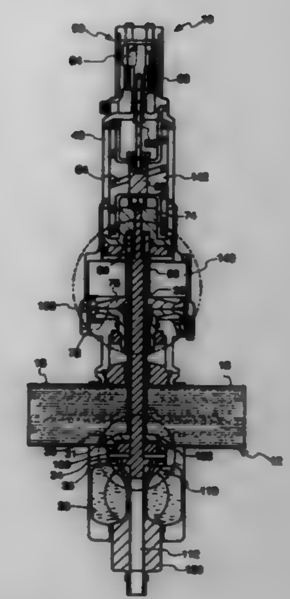

5,699,826
HAZARDOUS GAS MIXING APPARATUS WITH RAKE FOR DISLODGING CONDUIT DEPOSITS
Samir S. Shiban, Beaverton, Oreg., assignor to Innovative Engineering Solutions, Inc., Beaverton, Oreg.
Filed Sep. 3, 1996, Ser. No. 699,722
Int. Cl.⁶ B08B *9/04*
U.S. Cl. 137—244 **6 Claims**

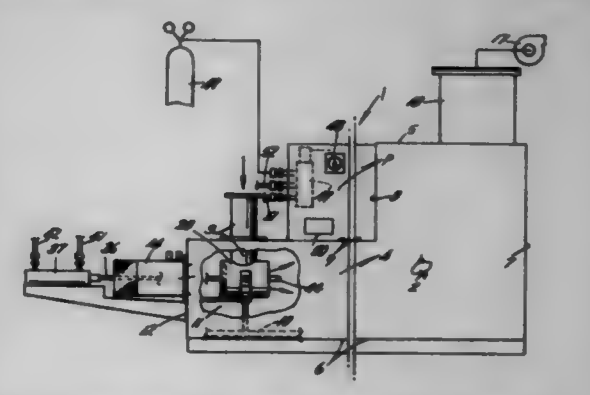

1. In an apparatus for mixing a hazardous gas with air in a chamber to render the hazardous gas inert, the improvement comprising,

hazardous gas conduit structure in said chamber and including an end plate,
a rake supported for rectilinear travel in said conduit structure and having a perimetrical edge proximate an internal wall surface of the conduit structure for cleaning said conduit structure, said rake having a static rest position adjacent said end plate,
an actuator imparting movement to said rake to remove hazardous gas deposits from the internal wall surface of said conduit structure,
a rake control system for automatic actuation of said actuator at timed intervals to impart movement to said rake, said rake defining an opening through which a hazardous gas may pass, and
said hazardous gas conduit structure including a projection on said end plate for insertion into said opening in said rake to remove accumulated deposits therein to ensure the passage of hazardous gas through the rake defined opening during rake travel through the hazardous gas conduit structure.

5,699,827

LAWN TREATMENT APPARATUS FOR AN UNDERGROUND SPRINKLER SYSTEM

Virgil A. Delorme, 23615 ½ Hillview Rd., San Bernardino, Calif. 92404; Thomas Crisofulli, 13066 Balboa La., Moreno Valley, Calif. 92553, and Madelyn Joy Warner, 3908 Oakwood Pl., Riverside, Calif. 92506

Filed Sep. 19, 1996, Ser. No. 715,073

Int. Cl.^{6} B01D *11/02*

U.S. Cl. 137—268 **3 Claims**

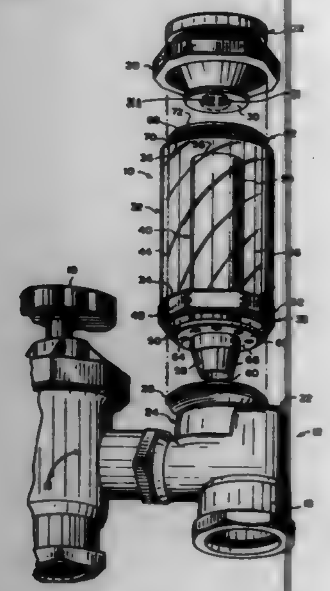

1. Lawn treatment apparatus for delivering chemical to an underground sprinkler system comprising:
a) a water inlet pipe having a water control valve connected to an outlet pipe for delivering water to said underground water sprinkler system, said outlet pipe having an anti-siphon valve assembly, said assembly having an anti-siphon valve housing with a threaded mouth and a threaded anti-siphon valve cap carrying an anti-siphon valve;
b) a cylindrical, vertically extending body member having an open bottom end and an open top end mounted between said anti-siphon valve housing and said anti-siphon valve cap;
c) means for securing said open bottom end of said body member to the threaded mouth on the anti-siphon valve housing;
d) means disposed in said body member for mixing said chemical deposited within said body member with water flow traveling from the inlet pipe into the anti-siphon valve assembly and out through the outlet pipe to the underground sprinkler system, said mixing means comprising a vertically extending cylindrical tube located within said body member to form a space within said body member completely surrounding said tube, said tube having a top outlet port and a tapered bottom portion with an inlet port, and a control plate having a plurality of exit holes therethrough surrounding said elongated water flow tube above said tapered bottom portion, so that with said tapered portion extending into said anti-siphon valve housing, allowing water to travel from said inlet pipe into said anti-siphon valve housing, through said inlet port into and up said elongated water flow tube, out from said top outlet port through said anti-siphon valve, down through said body member around said flow tube mixing with said chemical, through said exit holes in said control plate and an exit side of the anti-siphon valve housing into said outlet pipe; and
e) means for retaining said open top end of said body member to said anti-siphon valve cap, so that said anti-siphon valve prevents the water with the chemical from backing up into the water supply.

5,699,828

COVER ASSEMBLY WITH INTEGRAL MEASUREMENT INDICIA FOR COVERING UNDERSINK PIPING

John A. Helmsderfer, 2151 Luray Ave., Cincinnati, Ohio 45206

Continuation-in-part of Ser. No. 490,599, Jun. 6, 1995, which is a continuation-in-part of Ser. No. 337,971, Nov. 14, 1994, Pat. No. 5,564,463, which is a continuation-in-part of Ser. No. 271,439, Jul. 7, 1994, Pat. No. 5,586,568, which is a continuation-in-part of Ser. No. 146,999, Oct. 29, 1993, Pat. No. 5,341,830, and a continuation-in-part of Ser. No. 675,779, Jul. 5, 1996, Pat. No. 5,649,566, which is a division of Ser. No. 271,439, Jul. 7, 1994. This application Oct. 22, 1996, Ser. No. 735,132

Int. Cl.^{6} F16L *59/18*

U.S. Cl. 137—375 **15 Claims**

1. An insulative cover assembly for insulating a P-trap drain piping assembly located under a sink including a straight pipe, a J-shaped pipe, and an L-shaped pipe joined together at junctures by pipe nuts, the cover assembly comprising:
a unitary body including a first cover section and a second cover section coupled together, the first cover section having an elongated body terminating in an approximately 180° bend at an end of said first section, and the second cover section having an elongated body terminating in an approximately 90° bend at an end of said second section, the first and second cover sections being separable for covering the pipes;
the first and second cover sections each including a longitudinal slit thereon for being spread apart and positioned over the pipes;
measurement indicia positioned on a surface of said body, the measurement indicia being formed on an inside surface of

said body and providing an indication of length of at least one of the cover sections for proper sizing and installation of said cover section on a pipe;
whereby the piping assembly is quickly and efficiently covered and insulated.

5,699,829

FLUID CONTROL VALVE WITH SOFT STARTUP

Charles A. Weiler, Jr., Holly, and Hendrik Pieter Bareno, Sterling Heights, both of Mich., assignors to Ross Operating Vale Co., Troy, Mich.

Filed May 14, 1996, Ser. No. 645,679

Int. Cl.^{6} F15B *13/04;20/00;* **F16K** *35/06*

U.S. Cl. 137—383 **14 Claims**

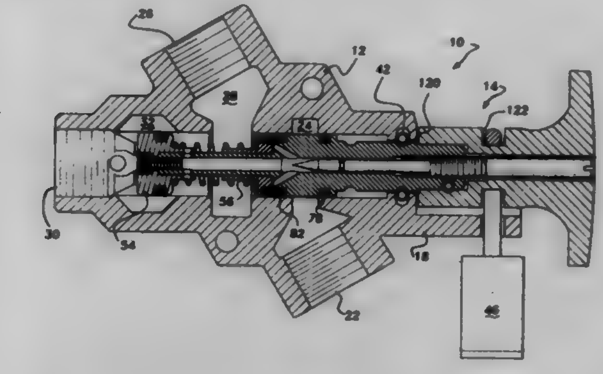

1. A fluid control valve comprising:
a valve housing defining an inlet port, an outlet port and an exhaust port;
a valve spool assembly movable with respect to said valve housing between an open condition and a closed condition, said inlet port being in communication with said outlet port when said valve spool assembly is in said open position, said outlet port being in communication with said exhaust port when said valve spool assembly is in said closed position; and
means associated with said valve spool assembly for delaying full communication between said inlet port and said outlet port when said valve spool assembly is moved from said closed position to said open position, said delaying means comprising:
a piston slidably disposed upon said valve spool assembly, said piston blocking said full communication between said inlet port and said outlet port when said valve spool assembly is initially moved from said closed position to said open position; and
a by-pass passage disposed between said inlet port and said outlet port, said by-pass passage being opened when said valve spool assembly is initially moved from said closed to said open position, said by-pass passage allowing fluid to flow from said inlet port to said outlet port at a specified rate, said piston being moved to allow said full communication between said inlet port and said outlet port when fluid pressure at said outlet port reaches a specified value.

5,699,830

SOLENOID VALVE CONTROLLER

Bunya Hayashi, and Keisuke Shimauchi, both of Yawara, Japan, assignors to SMC Corporation, Tokyo, Japan

Filed Oct. 25, 1995, Ser. No. 548,135

Claims priority, application Japan, Dec. 2, 1994, 6-329712

Int. Cl.^{6} F16K *37/00;31/06*

U.S. Cl. 137—554 **5 Claims**

1. A solenoid valve controller, comprising a plurality of solenoid valves intensively installed for controlling pressure fluid, a serial unit for performing on-off control of each of said solenoid valves

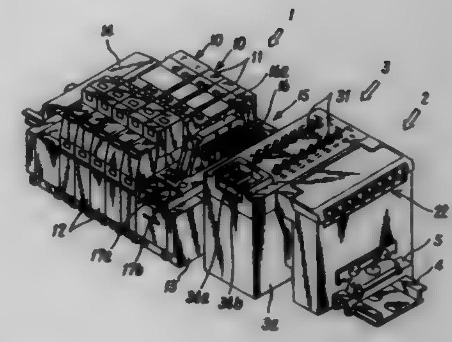

according to a control signal from the controller, and a switch unit electrically connected between said solenoid valves and said serial unit, whereby:
said switch unit is equipped with a plurality of manual switches to match each of the solenoid valves, and said manual switches can be switched over to a switching position to connect the solenoid valves to output terminals of the serial unit and to a switching position to connect the solenoid valves to power terminals.

5,699,831

CONNECTING DEVICE IN A PAINT TONING MACHINE

Tapio Seppänen, Kauniainen, Finland, assignor to Cimcorp Oy, Kauniainen, Finland

PCT No. PCT/FI94/00101, § 371 Date Sep. 14, 1995, § 102(e) Date Sep. 14, 1995, PCT Pub. No. WO94/21477, PCT Pub. Date Sep. 29, 1994

PCT Filed Mar. 18, 1994, Ser. No. 522,329

Claims priority, application Finland, Mar. 23, 1993, 931282

Int. Cl.^{6} F16L *37/28*

U.S. Cl. 137—614.03 **9 Claims**

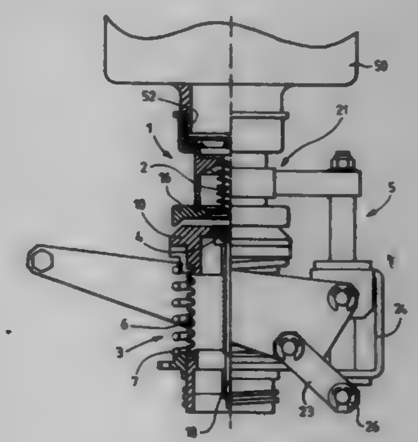

1. A connecting device in a paint toning machine for connecting a paste container to a toning paste supply hose of the toning machine, comprising
a first connector to be connected to a discharge aperture of the paste container and containing a valve element,
a second connector to be connected to the toning paste supply hose and containing a spindle, and
a connection mount for receiving the first and the second connector, for supporting them against each other and for forcing the spindle of the second connector to open the valve element of the first connector.

5,699,832
FAUCET WATER INPUT CONNECTION

Thomas H. Burchard, Winchester; Gregory Hunter, Westwood; Kevin M. Johnson, Natick; Jeffery Karg, Hopkinton, all of Mass., and John E. Bertrand, Fairview Park, Ohio, assignors to Moen Incorporated, North Olmsted, Ohio

Filed Dec. 6, 1996, Ser. No. 761,123

Int. Cl.[6] F16K *15/18*

U.S. Cl. 137—614.2 **5 Claims**

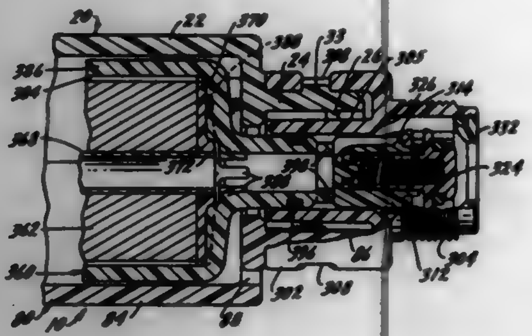

1. A faucet including a housing, at least one discharge outlet in said housing, a water input connection for said faucet housing, a water passage in said housing between said at least one discharge outlet and said water input connection, said input connection including a body having a water inlet and a water outlet, a seat adjacent said water inlet, an anti-siphon check valve movable within said body and having a surface positioned to close upon said seat,

an anti-flow valve positioned within said body and movable along a path coaxial with said anti-siphon check valve, a seat adjacent said outlet within said body, said anti-flow valve having a surface positioned to close upon said seat adjacent said outlet, means within said faucet housing for moving said anti-flow valve away from its seat to permit flow from said body into said faucet housing water passage,

said anti-siphon check valve and said anti-flow valve each having coaxial chambers therein, a spring positioned within said coaxial chambers, said spring urging said anti-siphon check valve toward its seat and urging said anti-flow valve toward its seat.

5,699,833
ELECTRO-MECHANICAL FLUID FLOW CONTROL APPARATUS

Eddie J. Tsataros, 5822 Imperial Key, Tampa, Fla. 33615

Filed Mar. 25, 1996, Ser. No. 621,353

Int. Cl.[6] F16K *31/02*

U.S. Cl. 137—624.11 **15 Claims**

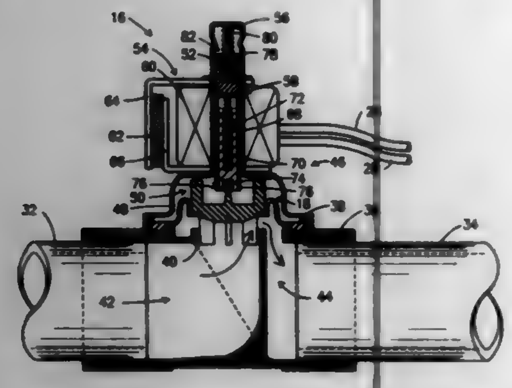

1. An electro-mechanical fluid flow control apparatus to control the flow of water through a shower head directed to a target zone or a field from an external souce of pressurized water wherein said electro-mechanical fluid flow control apparatus comprises a valve assembly including a valve member and a valve member positioning device disposed in operatively relationship relative to the valve member to selectively move the valve member between a closed position and an open position and a control assembly to selectively move the valve member from the closed position to the open position allowing water to flow from the external source of pressurized water through the valve assembly to the shower head, said valve member is movably mounted to a valve body by a resilient valve member retainer, said valve body includes a valve flow port disposed to be selectively closed by said valve member and coupled between a fluid inlet supply conduit and a fluid outlet supply conduit by an inlet port and an outlet port respectively, a valve housing comprises a lower enlarged housing portion having a valve chamber formed therein to operatively house said valve member and an upper elongated housing portion having an outer actuator assembly disposed about the exterior thereof including an actuator chamber formed therein to operatively house an inner actuator assembly movable between an extended and retracted position, said outer actuator assembly comprises an electro-magnetic coil disposed in surrounding relationship relative to said inner actuator assembly and electrically connected to said control assembly to receive control signals therefrom and a permanent magnet disposed in spaced relationship relative to said electro-magnetic coil and said inner actuator assembly, said inner actuator assembly comprises a lower actuator member having a lower bias disposed within a recess formed therein and a shaped valve positioning element movably mounted between a lower position and an upper position within a pair of grooves formed on opposite sides of said actuator member and an actuator member having an upper bias disposed within a recess formed therein such that said lower end of said valve positioning element is normally biased in said lower position to engage said valve member to retain said valve member in said closed position, and said electro-magnetic coil selectively moves said inner actuator assembly to the retracted position whereby the lower end of said positioning element disengages said valve member opening said valve member.

2. The electro-mechanical fluid flow control apparatus of claim 1 wherein said elector-mechanical fluid flow control apparatus is operable in a first state to prevent flow of water therethrough and a second state to selectively allow water to flow therethrough, said control assembly includes switching logic to generate a power on signal and a power off signal to selectively switch operations of said electro-mechanical fluid flow control apparatus between said first state and said second state and control logic to selectively generate a first control signal upon switching from said first state to said second state to move said valve member from the closed position to the open position for a first predetermined period of time, a first intermediate control signal to close said valve member when said electro-mechanical fluid flow control apparatus is in said second state and a person is not sensed in the target zone or field for a second predetermined period of time and a second intermediate control signal to open said valve member for the second predetermined period of time of five seconds when said electro-mechanical fluid flow control apparatus is in said second state and a person is sensed in the target zone or field and a fourth control signal to switch operation of said electro-mechanical fluid flow control apparatus from said second state to said first state after a third predetermined period of time between said first intermediate control signal and said second intermediate control signal.

5,699,834
MANIFOLD-TYPE SOLENOID VALVES

Bunya Hayashi, and Makoto Ishikawa, both of Tsukuba-gun, Japan, assignors to SMC Corporation, Tokyo, Japan

Filed Aug. 27, 1996, Ser. No. 703,549

Claims priority, application Japan, Oct. 2, 1995, 7-278439

Int. Cl.[6] F15B *13/08*

U.S. Cl. 137—884 **2 Claims**

1. A manifold-type solenoid valve, comprising:

a manifold holding a plurality of change-over valves on a top portion thereof and having common supply and discharge

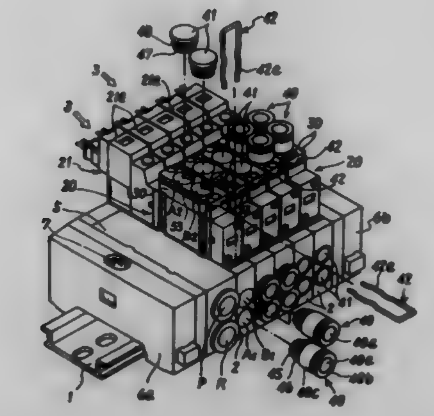

ducts communicating through the manifold with supply and discharge ports respectively of change-over valve openings in a top portion thereof and a pair of first output openings provided in a front surface of the manifold and individually communicating with a pair of first output ports in each change-over valve through said supply and discharge ducts, each of said change-over valves having said pair of first output ports and a pair of second output ports communicating therewith in a valve body thereof, with the second output ports opening in the top portion of the change-over valves, and a solenoid actuating said valve body and switching communication of the output ports between the supply ports and said discharge ports:

a first fit-in groove having legs disposed on both sides of the first pair of output openings in the manifold and separated from each other by a distance smaller than a diameter of the first output openings;

a first substantially U-shaped stopper pin having legs which are inserted into the first fit-in groove and which project into the first output openings; and

one of a pipe fitting and a closing plug which is fitted into the first output openings and having around a periphery thereof an engaging groove with which the legs of the stopper pin are engageable;

said change-over valve having a second pair of output openings having the same diameter as said first output openings, a second fit-in groove situated on both sides of the second output openings and which have legs;

a second stopper pin positionable in said second fit-in groove and having legs which are separable from each other by the same distance as that between the legs of the first fit-in groove;

wherein said one of said pipe fittings and said closing plug are fitted in each of the first and second output openings by using one of said first and second stopper pins wherein the legs thereof are engageable in the engaging grooves around the pipe fittings and closing plugs.

5,699,835
MULTI-LAYER PLASTIC HOLLOW PIPE

Tatsuya Nakagawa, Matsudo, and Yasuo Ezaki, Nitta-machi, both of Japan, assignors to Excell Corporation, Japan

Continuation of Ser. No. 205,681, Mar. 2, 1994, abandoned, which is a continuation of Ser. No. 800,330, Nov. 26, 1991, abandoned. This application Nov. 15, 1996, Ser. No. 749,713

Claims priority, application Japan, Nov. 26, 1990, 2-317985

Int. Cl.[6] F16L *9/14*

U.S. Cl. 138—141 **14 Claims**

1. A multi-layered plastic pipe, comprising:

a blow molded hollow member formed in a predetermined shape from a first plastic material;

a plurality of isolated spacer members each provided in the form of an isolated projection, having side peripheries, the projec-

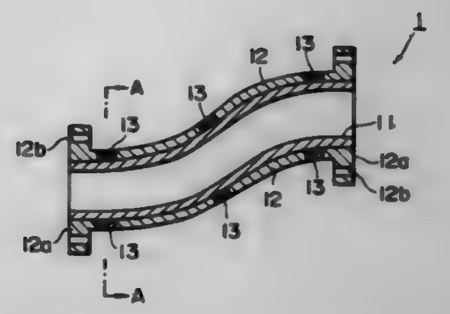

tions being at multiple predetermined selected places spaced longitudinally on an outer peripheral surface of said blow molded hollow member, said spacer members having a predetermined height and being formed from a second plastic material;

an outer layer integrally formed from a third plastic material on said outer peripheral surface of said blow molded hollow member and surrounding the entire side peripheries of said spacer members; and

wherein said spacer members are located at the multiple predetermined selected places to define a means for counteracting a force applied to said blow molded hollow member in a direction transverse to a longitudinal axis of said blow molded hollow member when the third plastic material is formed on said blow molded hollow member.

5,699,836
METHOD AND APPARATUS FOR MANUFACTURING SLOTTED WEBBING ON A NEEDLE LOOM

Robert E. Golz, Swansea, Mass., assignor to Murdock Webbing Company, Inc., Central Falls, R.I.

Filed Jun. 13, 1996, Ser. No. 661,318

Int. Cl.[6] D03D *35/00;47/06*

U.S. Cl. 139—22 **6 Claims**

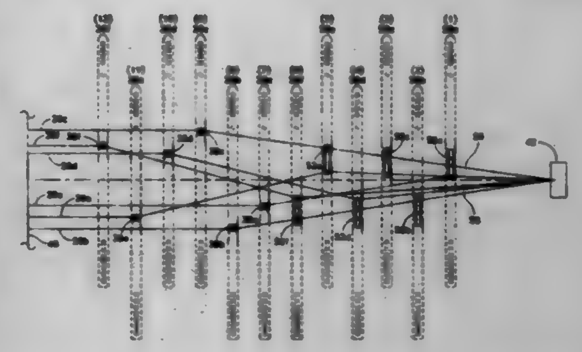

1. A method of manufacturing slotted webbing of the type having slotted portions and solid portions, said method comprising the steps of:

(a) providing a needle loom machine including at least two different heddle types;

(b) selectively positioning warp yarns with said needle loom machine between a first position associated with the first heddle type in which there is a single shed opening provided through the yarns and a second position associated with the second heddle type in which there are two shed openings provided through the yarns;

(c) inserting weft yarns with said needle loom machine through the shed openings to weave the warp yarns with the weft yarns;

(d) weaving the solid portion of the webbing when the warp yarns are in their first position; and

(e) weaving the slotted portion of the webbing when the warp yarns are in their second position.

5,699,837

COMBINED PILE FEEDER CONTROL SYSTEM AND PILE WARP LET-OFF MOTION FOR PILE WEAVING MACHINE

Hans Desmet, Kooiskamp, Belgium, assignor to N.V. Michel Van De Wiele, Marke, Belgium

Filed May 9, 1996, Ser. No. 647,050

Claims priority, application Belgium, May 11, 1995, 09500427

Int. Cl.⁶ D03D *39/16*

U.S. Cl. 139—102 **11 Claims**

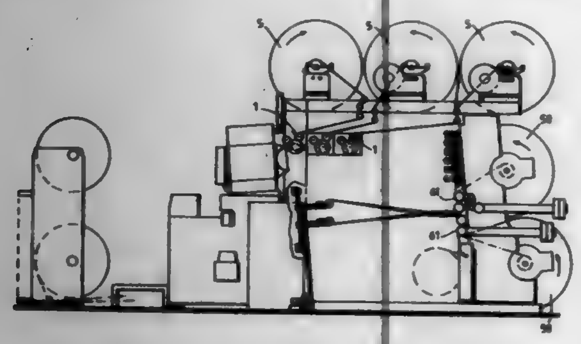

1. A pile feeder control system and pile warp let-off motion for a face-to-face weaving machine, for weaving plain velvet and carpets, comprising a pile feeder and a pile warp beam let-off motion equipped with a computer suitable for calculating the necessary pile warp feed rate for each operating cycle of the weaving machine and using said calculation as a reference value, wherein a computer-controlled or a direct pile beam drive directly controls operation of both the pile feeder and pile warp beam let-off motion together, and wherein the pile warp beam let-off motion comprises a regulating system consisting of a multi-axis control system provided for one or more pile warp beams.

5,699,838

APPARATUS FOR VACUUM IMPREGNATION OF A FLEXIBLE, HOLLOW TUBE

Giulio Catallo; Joe V. Cihlar, both of Houston, and Maurice P. G. Lubbeck, Sugarland, all of Tex., assignors to Insliner, U.S.A., Houston, Tex.

Filed May 22, 1995, Ser. No. 446,459

Int. Cl.⁶ B29C *63/26;* **B65B** *31/04*

U.S. Cl. 141—65 **9 Claims**

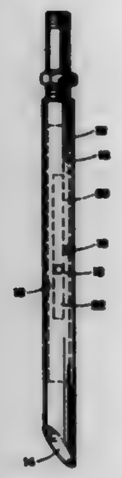

1. A vacuum device for removing air from a flexible tube that is to be used to line a conduit and to be impregnated with fluid, comprising:

an outer tubular member having at least two outer apertures and an inner tubular member having at least one inner aperture, said inner tubular member disposed for movement within the outer tubular member so that the at least one inner aperture can be aligned with one outer aperture of the at least two outer apertures so as to provide one set of aligned apertures which forms a point of evacuation or with another outer aperture of the at least two outer apertures so as to provide another set of aligned apertures which forms another point of evacuation, said device also having a pointed end such that the device can be inserted into the flexible tube, said device also having a vacuum source operably connected to the inner tubular member for drawing air through the aligned apertures of a set so that air can be removed from the flexible tube, wherein at least one set of aligned apertures can be selected by moving the inner tubular member with respect to the outer tubular member, thereby controlling location of the point of evacuation.

5,699,839

ZERO-VENT LIQUID NATURAL GAS FUELING STATION

Hans-Joachim Dehne, Los Altos, Calif., assignor to Acurex Environmental Corporation, Mountain View, Calif.

Filed Jul. 14, 1995, Ser. No. 502,678

Int. Cl.⁶ F17C *13/00*

U.S. Cl. 141—248 **13 Claims**

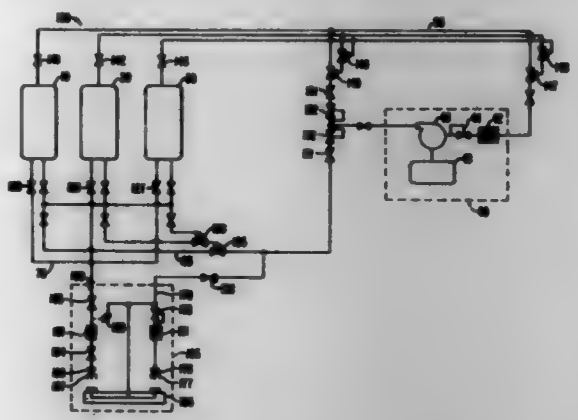

1. A method of operating a liquid natural gas fueling station comprising first, second, and third cyrogenic storage vessels, wherein said first vessel contains natural gas vapor and said second and third vessels contain liquid natural gas, comprising:

(a) lowering the vapor pressure in said first vessel by extracting natural gas vapor therefrom, which also lowers the temperature of liquid natural gas, if present, in said first vessel;

(b) conducting said extracted vapor into at least one of the following:

1) said second vessel to pressurize said second vessel;

2) said liquid in said third vessel;

(c) introducing liquid natural gas into said first vessel;

(d) dispensing liquid natural gas from said second vessel; and

(e) repeating steps (a) through (d) using said second vessel in steps (a) and (c), said first vessel in step (b2), and said third vessel in steps (b1) and (d).

5,699,840

RETENTION SYSTEM AND METHOD FOR PREVENTING THE EFFLUX OF SUBSTANCES FROM INSTALLATIONS INTO THE SURROUNDINGS

Klaus Alberti, Idstein; Eberhard Ritter, deceased, late of Marburg, by Rosemarie Ritter-Horn, neé Horn, heiress; Frank Westphal, and Guido Wehmeier, both of Frankfurt am Main, all of Germany, assignors to Hoechst Aktiengesellschaft

Continuation of Ser. No. 287,842, Aug. 9, 1994. This application Jun. 13, 1996, Ser. No. 662,952

Claims priority, application Germany, Aug. 11, 1993, 43 26 888.9

Int. Cl.⁶ B65D *90/24;* **B08B** *15/00*

U.S. Cl. 141—313 **5 Claims**

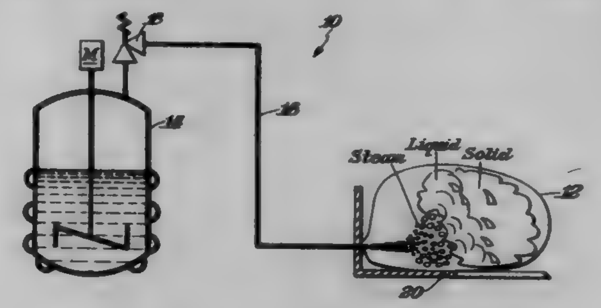

1. A safety retention system comprising a reaction vessel in which chemical reactions are carried out and which contains various substances, the vessel having at least one outlet, a pressure-relief safety device connected to the outlet constructed and arranged to open the outlet to relieve unexpected pressure or a blow out in the reaction vessel, at least one flexible container for receiving unexpected pressure buildup and various substances from the reaction vessel when the pressure-relief safety device opens the outlet of the reaction vessel, an outlet line extending between the pressure-relief safety device and the at least one flexible container, and wherein the at least one flexible container is composed of high strength fabric and the at least one flexible container has a volume dimensioned to receive escaping substances from the reaction vessel via the pressure-relief safety device and the outlet line whereby an internal pressure buildup in the at least one flexible container is no more than 3 bars above external pressure.

5,699,841

THERMOS BOTTLE

Nobuyuki Takagawa, 5-12-20, Sagisu, Fukushima-ku, Osaka, Japan

Filed May 24, 1996, Ser. No. 653,005

Int. Cl.⁶ B65B *39/00;* **B67C** *11/04*

U.S. Cl. 141—331 **3 Claims**

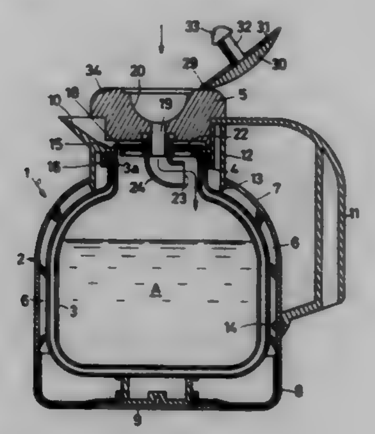

1. In a thermos bottle comprising:

an outer container having an opening at a top thereof and a spout formed extending from said opening;

an inner container having an opening at a top thereof and disposed inside of said outer container with said opening thereof aligned with said opening of said outer container; and

plug means positioned to fit within said aligned openings of said inner container and said outer container; the improvement comprising:

said plug means comprising a curved passage way extending from said plug means and into said inner container, said curved passage way being constructed so that a curve thereof curves away from said spout so that a liquid is fed directly from outside the thermos bottle into said inner container so that a liquid contained within said inner container cannot flow back through said passage way when said thermos bottle is tilted to pour liquid through said spout from said inner container; wherein

said plus means further comprises an inner lid for closing said opening of said inner container when said thermos bottle is in a vertical position; and wherein

said inner lid is moved by said liquid so as to provide an opening in said opening of said inner container when said thermos bottle is tilted to pour liquid from said inner container through said spout.

5,699,842

MAGNETIC FILLING AND MIXING APPARATUS AND PROCESSES THEREOF

Paul M. Wegman, Pittsford, N.Y., assignor to Xerox Corporation, Stamford, Conn.

Filed Apr. 12, 1996, Ser. No. 631,485

Int. Cl.⁶ B65B *1/04;3/00;* **B67C** *3/00*

U.S. Cl. 141—369 **17 Claims**

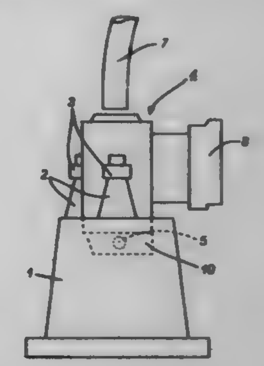

13. An apparatus for filling a container and mixing the filled contents thereof, comprising:

an elevating conveyor for placing a container in filling relationship to a fill tube;

a source and magnetic valve means for moving a magnetic material from the source through the fill tube to the container to fill the container with magnetic material;

at least one magnetic element for applying a magnetic field to the magnetic material in the container; and

a second source and non magnetic valve means for moving a non magnetic material from the second source through the fill tube to fill the container with non magnetic material, wherein the container is conveyed on the conveyor and the filled magnetic and non magnetic materials intimately mix.

5,699,843

MULTI-DRUM BARKING MACHINE

Éric Gagné, 55, Chassé, St-Anaclet, Rimouski, Québec, Canada, G0K 1H0

Filed Oct. 25, 1996, Ser. No. 738,064

Claims priority, application Canada, Sep. 20, 1996, 2186098

Int. Cl.[6] B27C *9/00*; B27L *1/00*

U.S. Cl. 144—208.9 **8 Claims**

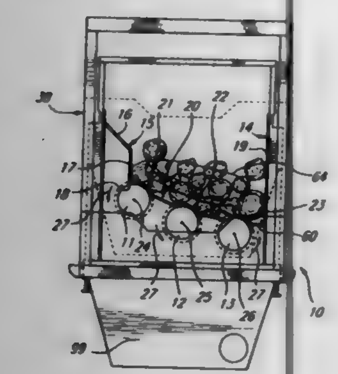

1. A barking machine comprising:

a container for accommodating logs longitudinally therein, said container having a first longitudinal side wall with a lower end, a second longitudinal side wall opposite to the first longitudinal side wall, and a bottom wall including a first longitudinal opening adjacent to the lower end of the first side wall, a second intermediate longitudinal opening, and a third longitudinal opening situated on the side of the second longitudinal opening opposite to the first longitudinal opening;

first, second and third longitudinal rotary drum members rotatively mounted in the first, second and third longitudinal openings, respectively, to expose a top portion of said first, second and third rotary drum members inside the container;

a plurality of outer barking teeth distributed on the rotary drum members to contact the logs as said rotary drum members rotate to bark said logs; and

means for rotating said rotary drum members in the same direction to displace the barking teeth of the top portion of the rotary drum members in the direction of the first side wall;

wherein said bottom wall and said rotary drum members form a wall and drum member assembly having a first slope from the first drum member to the second drum member and a second slope smaller than said first slope from the second drum member to the third drum member.

5,699,844

ROUTER PLATE WITH REMOVABLE INSERTS

Bradley R. Witt, 5323 W. Kimberly Rd., Davenport, Iowa 52806

Filed Oct. 22, 1996, Ser. No. 734,585

Int. Cl.[6] B27M *1/00*; B27C *5/00*; B21D *39/00*

U.S. Cl. 144—329 **12 Claims**

6. A method of detachably securing one of a plurality of removable inserts to a router plate for use with a router having a planar surface and a router bit mounted on an arbor projecting from said planar surface, said router plate having a flat plate member with an opening extending therethrough, said opening having first and second axial ends and circular outer perimetric edges, an enlarged portion of said opening being adjacent said first axial end, a rabbet flange extending inwardly from said outer perimetric edges adjacent said second axial end, an O-ring disposed between said first axial end and said rabbet flange, each of said inserts having a top surface, a bottom surface, and a side edge with a grove between said top and bottom surfaces, said method comprising the steps of:

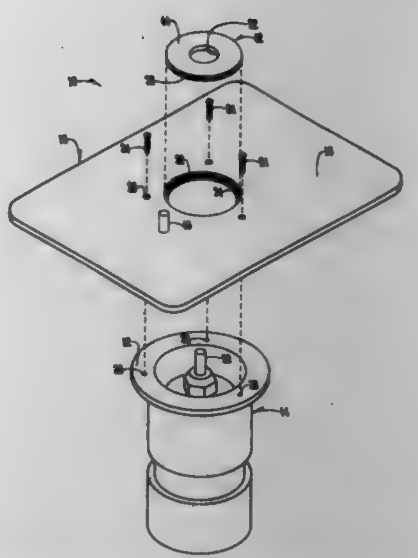

inserting one of said removable inserts into said opening; said bottom surface of said insert being supported by said rabbet flange and said grove receiving said O-ring.

5,699,845

MAGNETIC TILT MECHANISM FOR VENETIAN BLINDS

Ralph Jelic, Valencia, Pa., assignor to International Window Fashions, Inc., Pittsburgh, Pa.

Filed Sep. 25, 1996, Ser. No. 720,184

Int. Cl.[6] A47H *1/00*

U.S. Cl. 160—107 **23 Claims**

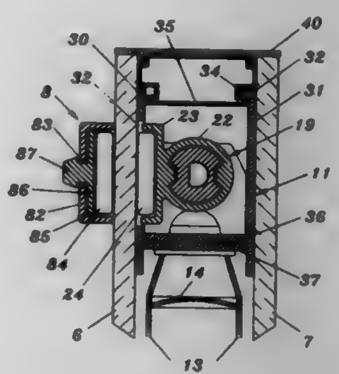

1. A tilt mechanism for use on a window blind having tilt cords and positioned behind a pane of glass having an inner surface and an outer surface the tilt mechanism comprising:

a. a shaft having a double helix threaded portion and portions to which the tilt cords can be attached;

b. a nut on the threaded portion of the shaft;

c. a first magnet attached to the nut and positioned for placement adjacent the inner surface of the pane of glass; and

d. a slide having a second magnet positioned opposite the first magnet such that movement of the slide and second magnet in one direction moves the nut in that same direction causing the shaft to rotate in a clockwise direction and movement of the slide and second magnet in an opposite direction moves the nut in that opposite direction causing the shaft to rotate in a counterclockwise direction, wherein the slide is comprised of a generally rectangular housing having a slot and a tab projecting through the slot and attached to the second magnet, the tab projecting outwards from the housing such that the tab can be grasped manually and moved within the slot to move the second magnet with respect to the housing thereby causing

the shaft to rotate an amount corresponding to a distance over which the tab is moved.

5,699,846

WAND-CONTROLLED SPLIT-DRAW VERTICAL BLIND HEADRAIL

Harout Ohanesian, Northridge, Calif., assignor to U.S. Polymers, Inc., Commerce, Calif.

Filed Feb. 7, 1996, Ser. No. 597,669

Int. Cl.[6] E06B *9/36*

U.S. Cl. 160—168.1 V **14 Claims**

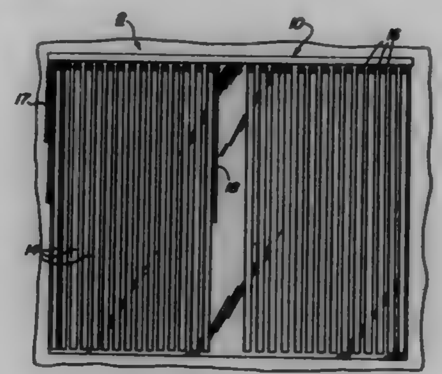

1. A split-draw vertical slat blind system comprising:

a hollow, longitudinally-extending headrail having a top, two sides, and an opening extending along and entire lower face thereof, retainer tracks borne on either lower edge of the sides, and two open ends;

a first and a second end cap sized for insertion into the open ends of the headrail;

a splined rod extending the length of the headrail and suspended within the headrail by the end caps;

a plurality of identical slat carriers having a central aperture and first and second bores, each slat carrier slidingly supported within the headrail by the splined rod which passes through the central aperture in each slat carrier and by wheels disposed on each slat carrier to ride on the retainer tracks;

a cord forming a closed loop, horizontally disposed with a first side of the loop passing parallel to the splined rod and through the first bores of the plurality of slat carriers on a first side of the rod and a second side of the loop passing parallel to the splined rod and through the second bores of the plurality of slat carriers on a second side thereof, the loop passing around a first reversing means for reversing the cord at the first end cap and a second reversing means for reversing the cord at the second end cap;

a slave carrier comprising one of the plurality of identical carriers being fixed to the cord on one side of the closed loop;

a stabilizer assembly comprising a frame member having first and second bores and shaped for engaging one of the slat carriers with the first and second bores of the frame member aligned with the first and second bores of the slat carriers; a wand attached to the frame member and descending therefrom so that an operator can move the stabilizer assembly and the engaged carrier along the headrail by grasping and moving the wand; and wheels attached to the frame member and disposed to glide along an inner surface of the top of the headrail thereby preventing the stabilizer assembly and the engaged carrier from binding on the retaining tracks when the operator moves the wand; and

a master carrier comprising one of the plurality of identical carriers being engaged by the stabilizer assembly, and being fixed to the cord on a side of the closed loop opposite that engaged by the slave carrier so that the master carrier can be moved longitudinally along the headrail by the operator moving the wand, the cord being moved thereby and traveling around the reversing means causing the slave carrier to move in a direction opposite to the master carrier.

5,699,847

MOTORIZED ROLL-UP DEVICE FOR VENETIAN BLINDS

Jean De Chevron Villette, Annecy le Vieux; Jean-Michel Perache, Passy, and Eric Lagarde, Sallanches, all of France, assignors to Somfy, France

Filed Jun. 13, 1996, Ser. No. 662,455

Claims priority, application France, Jun. 21, 1995, 95 07406

Int. Cl.[6] E06B *9/30*

U.S. Cl. 160—168.1 P **7 Claims**

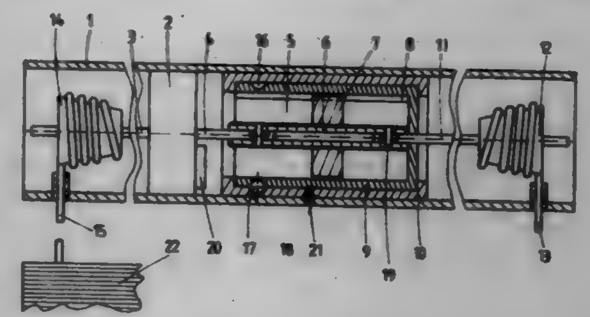

1. Venetian or folded blind cord or tape roll-up device having a casing (1), an electric motor (2) mounted within said casing, two cord or tape roll-up drums (12, 14) mounted within said casing, at least one output shaft (3, 4, 11) connected to said motor and said two roll-up drums to drive said two roll-up drums, control means (20) connected to said motor to sense a blockage of said motor and to stop said motor from rotating said at least one output shaft, said roll-up device further comprising a cylindrical cage (9) mounted in said casing,

said at least one output shaft having a cylindrical cage output shaft (4, 11) rotatably mounted within said cylindrical cage,

a screw member (6) attached to said cylindrical cage output shaft (4, 11) to rotate with said cylindrical cage output shaft,

an axially traveling stop member (7), attached to said screw member to move axially on said screw member,

internal cage means (8) connected to said axially traveling stop member to prevent said axially traveling stop member from rotating relative to said cage and to axially move said axially traveling stop member on said screw member when said cylindrical cage and said screw member are rotated relative to each other,

blocking means (17, 21) connected to said casing to selectively allow said cylindrical cage to rotate relative to said casing and to prevent rotation of said cylindrical cage relative to said casing,

first stop means connected to said cylindrical cage to selectively stop the axial travel of said axially traveling stop member on said screw member to cause a first blockage of said motor when said blind is in a first selected position, and

a second stop means to cause a second blockage of said motor when said blind is in a second selected position.

5,699,848

METHOD FOR MANUFACTURING A REPLICA STAMPER

Chang-Yong Lee, Chunan-si; Joo-Hwan Kim, Seoul, and Soo-Sun Ryu, Choongchungnam-do, all of Rep. of Korea, assignors to SKC Limited, Kyungki-do, Rep. of Korea

Filed Nov. 20, 1995, Ser. No. 560,695

Claims priority, application Rep. of Korea, Dec. 3, 1994, 94-32690

Int. Cl.[6] B22D *23/00*

U.S. Cl. 164—46 **8 Claims**

1. A method for manufacturing a replica stamper for use in the mass production of an optical disk, wherein the optical disk has a plurality of tracks arranged spirally or concentrically, and each of the tracks has a recess and a protrusion for the recordation of information signals thereon, the method comprising the steps of:

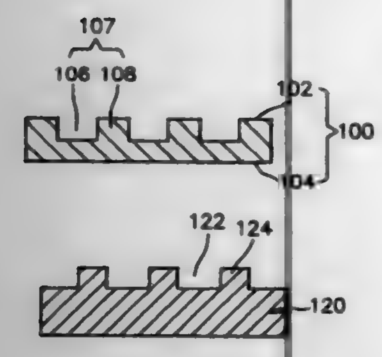

(a) preparing a master stamper made of polycarbonate having a top surface and a flat bottom surface, wherein the top surface of the master stamper includes a plurality of tracks, the plurality of tracks on the master stamper corresponding to the plurality of tracks on the optical disk, each of the tracks being provided with a recess and a protrusion;
(b) depositing a buffer layer on the entirety of the top surface of the master stamper;
(c) forming a replica stamper on top of the buffer layer;
(d) disengaging the master stamper from the buffer layer and the replica stamper; and
(e) removing the buffer layer from top of the replica stamper.

5,699,849
HOT-CHAMBER DIECASTING MACHINE
Roland Fink, Winterbach, Germany, assignor to Oskar Frech GmbH & Co., Schorndorf, Germany
PCT No. PCT/EP95/01963, § 371 Date Feb. 7, 1996, § 102(e) Date Feb. 7, 1996, PCT Pub. No. WO95/33588, PCT Pub. Date Dec. 14, 1995
PCT Filed May 23, 1995, Ser. No. 592,348
Claims priority, application Germany, Jun. 7, 1994, 44 19 848.5
Int. Cl.⁶ B22D *17/32;17/04*
U.S. Cl. 164—155.4 7 Claims

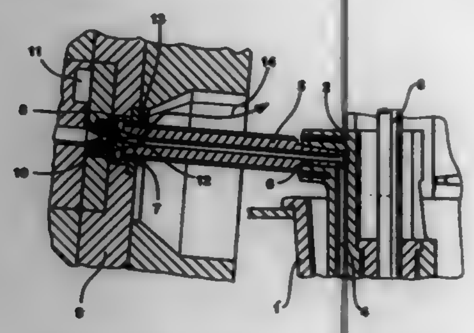

1. In a hot-chamber diecasting machine in which an injection process is influenced by an electronic control device to which input signals from an injection assembly are supplied, said diecasting machine having a casting container which dips into a melt and has a riser with a mouthpiece body mounted thereon, the mouthpiece body being guided with a nozzle tip up to a mold, the improvement comprising:
a metal sensor operatively arranged in a vicinity of a tip of the mouthpiece body, said metal sensor being connected with the electronic control device for feeding input signals to said electronic control device; and
high-dynamic continuous valves having switching times between 1 and 5 ms arranged to influence the injection process, said high-dynamic continuous valves being actuated by said electronic control device and permitting speed and pressure regulation which is suitable for a product to be cast.

5,699,850
METHOD AND APPARATUS FOR CONTROL OF STIRRING IN CONTINUOUS CASTING OF METALS
Leonid Beitelman, Thornhill, and Joseph A. Mulcahy, Brooklin, both of Canada, assignors to J. Mulcahy Enterprises Inc., Whitby, Canada
Continuation-in-part of Ser. No. 252,228, Jun. 1, 1994, abandoned, which is a continuation of Ser. No. 5,062, Jan. 15, 1993, abandoned. This application Jun. 7, 1995, Ser. No. 472,246
Int. Cl.⁶ B22D *11/04;27/02*
U.S. Cl. 164—468 18 Claims

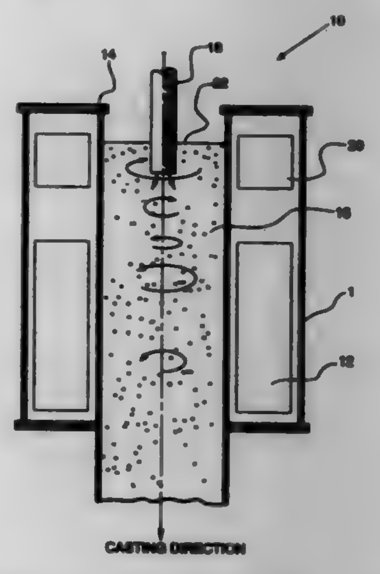

1. An induction stirring method for continuous casting of billets and blooms from molten metals, which comprises:
providing a vertical continuous casting mold having first a.c. electromagnetic induction coils in a main portion of the mold and second a.c. electromagnetic induction coils located above the first electromagnetic induction coils and adjacent an upper entrance to the mold, said second electromagnetic induction coils being capable of providing two modes of electromagnetic stirring dependent upon the continuous casting process employed,
feeding molten metal to the mold,
electromagnetically inducing stirring of molten metal within the continuous casting mold through rotation of the molten metal about a vertical axis with such intensity as normally to result in turbulence in the molten metal including its free surface, by applying a first rotating magnetic field to said molten metal from said first electromagnetic induction coils,
applying simultaneously to said molten metal in the mold at a location adjacent the free surface of said molten metal, a second rotating magnetic field from said second electromagnetic induction coils, said second rotating magnetic field provided by said second electromagnetic induction coils being of an intensity which selectively is:
(a) at least sufficient to minimize the stirring motion and disturbances induced by said first electromagnetic induction coils in said free surface area when the second electromagnetic induction coils are operated in said first mode of operation to produce the second rotating magnetic field rotating in a direction opposite to the direction of rotation of the first rotating magnetic field when submerged entry nozzle casting is effected with surface mold powder, or
(b) at least sufficient to enhance the stirring motion induced by said first electromagnetic induction coils in said free surface area when the second electromagnetic induction coils are operated in said second mode of operation to produce the second rotating magnetic fields rotating in a direction which is the same as the direction of rotation of said first rotating magnetic field when casting is effected without mold powder.

5,699,851
AIR CONDITIONER FOR VEHICLES
Kazunori Saida, Kariya, and Hiroyuki Yamaguchi, Aichi-gun, both of Japan, assignors to Nippondenso Co., Ltd., Kariya, Japan
Filed Apr. 16, 1996, Ser. No. 633,082
Claims priority, application Japan, Apr. 18, 1995, 7-092806
Int. Cl.⁶ F25B *29/00*
U.S. Cl. 165—42 8 Claims

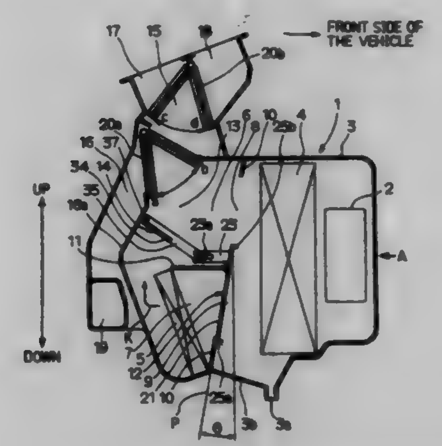

1. An air conditioner for a vehicle having a passenger compartment, said air conditioner comprising:
a case for introducing conditioned air to said passenger compartment;
a cooler disposed in said case, for cooling air passing therethrough;
a heater, disposed on a downstream side of said cooler in said case, for heating air passing therethrough;
a warm air passage formed at a downstream side of said heater in said case, through which said heated air passes, formed at a lower side in said case;
a cool air passage formed in parallel with said warm air passage at a downstream side of said cooler in said case and at an upper side in said case, through which said cooled air passes;
a cool air/warm air mixing chamber formed at a downstream side of said cool air passage and said warm air passage in said case, for mixing said cool air from said cool air passage and warm air from said warm air passage;
an air outlet passage formed at a downstream side of said cool air/warm air mixing chamber, for introducing air from said cool air/warm air mixing chamber into said passenger compartment; and
a sliding door disposed between said cooler and said heater and being slidable in a crossing direction which is proximate to and generally parallel to inlets of both said cool air passage and said warm air passage, for controlling a ratio between a volume of air flowing to said warm air passage and a volume of air flowing to said cool air passage; wherein,
said sliding door slides vertically in such a manner that an upper side portion of said sliding door inclines toward said cooler.

5,699,852
HEAT EXCHANGER HAVING A RESIN-COATED PIPE
Young Jae Park; San Il Park; Kyoung Bin Choi; Young Jin Ha; Ki Ho Park; Chang Bog Ko, and Jeong Gun Kim, all of Taejon, Rep. of Korea, assignors to Korea Institute of Energy Research, Taejon, Rep. of Korea
Filed Aug. 22, 1996, Ser. No. 701,659
Int. Cl.⁶ F28F *19/02*
U.S. Cl. 165—76 7 Claims

1. A heat exchanger comprising:
a plurality of pipe plates coated with a resin;

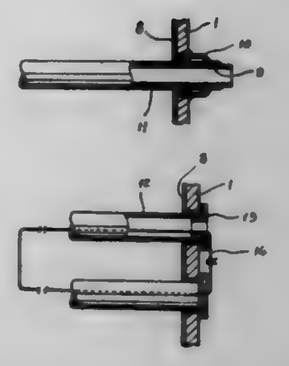

a plurality of side plates coated with the resin and interconnected with said pipe plates to define a flow passage surrounded by resin; and
a plurality of pipes having an outer surface thereof coated with the resin, said plurality of pipes being connected to said plurality of pipe plates so that a first medium is able to flow through an interior of said pipes, said plurality of pipes being arranged so as to traverse said flow passage to facilitate heat exchange between said first medium and a second medium flowing through said flow passage,
wherein said resin which coats said pipes terminates outside of the flow passage before the distal ends of the pipes, thereby leaving outside surfaces of the pipes exposed outside of the flow passage, and
further comprising at least one pipe assembling element connected to one of said pipe plates so as to project outwardly from said pipe plate and out of contact with said second medium, said pipe assembling element being arranged so as to contact one of said distal ends of the pipes and permit welding of said pipe assembling element to said distal end to thereby secure the distal end to the pipe plate without damaging said resin.
6. A heat exchanger comprising:
a plurality of pipe plates coated with a resin;
a plurality of side plates coated with the resin and interconnected with said pipe plates to define a flow passage surrounded by resin; and
a plurality of pipes having an outer surface thereof coated with the resin, said plurality of pipes being connected to said plurality of pipe plates so that a first medium is able to flow through an interior of said pipes, said plurality of pipes being arranged so as to traverse said flow passage to facilitate heat exchange between said first medium and a second medium flowing through said flow passage,
wherein said pipe plates, said side plates, and said pipes are fastened together by means of a plurality of wires installed within said pipes.

5,699,853
COMBINED HEAT SINK AND SINK PLATE
Gary Franklin Goth, Pleasant Valley; Randall Gail Kemink, Poughkeepsie; John Joseph Loparco, Poughkeepsie, and Roger Ray Schmidt, Poughkeepsie, all of N.Y., assignors to International Business Machines Corporation, Armonk, N.Y.
Filed Aug. 30, 1996, Ser. No. 697,806
Int. Cl.⁶ F28D *15/00*
U.S. Cl. 165—104.21 10 Claims

1. A heat sink comprising:
a first thermally conductive plate;
a second thermally conductive plate disposed substantially parallel to said first plate;
an array of substantially parallel thermally conductive fins extending between said first and second plates, said fins being in direct thermal contact with said first and second plates; and

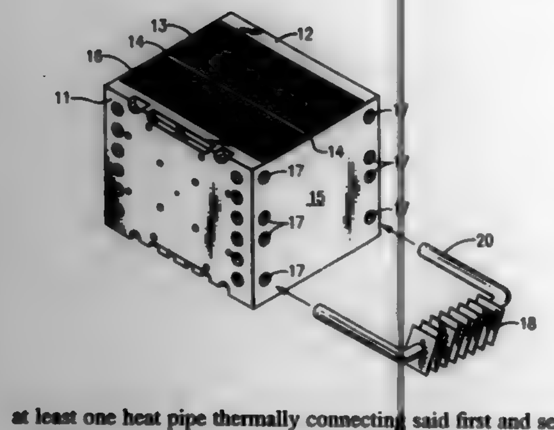

at least one heat pipe thermally connecting said first and second plates.

5,699,854

MINIATURE FAN ASSEMBLY FOR OUTPUTTING AIR IN A CERTAIN DIRECTION

Chen Fu-In Hong, No. 3, Lane 45, Yi-Yung Road, Lin-Ya District, Kaohsiung, Taiwan

Filed Nov. 8, 1996, Ser. No. 745,859

Int. Cl.⁶ F24H *3/02*

U.S. Cl. 165—121 **9 Claims**

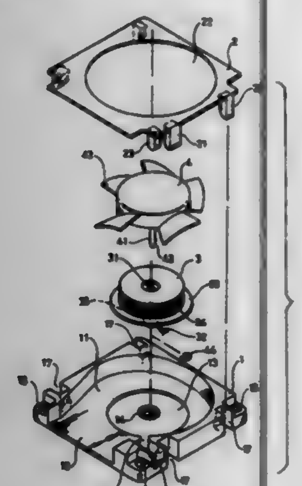

1. A miniature fan assembly, comprising:

a base having a peripheral wall bounding a first recess, a bottom wall of the first recess having a second recess defined therein, and a wire channel being defined in the bottom wall of the base and including a first end in communication with the second recess and a second end in communication with an environment, and an electric wire extending through the wire channel and having a first end and a second end adapted to be electrically connected to a power source;

a coil seat mounted in the first recess of the base, the coil seat and the peripheral wall of the base together defining a helical air passage therebetween, the coil seat including an axle hole defined therein and a coil mounted therearound the first end of the electric wire electrically connected to the coil;

a fan mounted above the coil seat, the fan including a head portion with a peripheral wall and a plurality of fan blades extending outwardly from the peripheral wall of the head portion, the fan further including an axle which is rotatably received in the axle hole of the coil seat, the peripheral wall of the head portion defining a hollow interior therein for accommodating the coil seat;

a top plate mounted above the fan; and

means for securely engaging the base with the top plate.

5,699,855

PLATE FIN HEAT EXCHANGER AND METHOD OF MAKING THEREOF

Kenichiro Mitsuhashi, Takasago, Japan, assignor to Kabushiki Kaisha Kobe Seiko Sho, Kobe, Japan

Filed Mar. 29, 1996, Ser. No. 623,848

Claims priority, application Japan, Mar. 31, 1995, HEI 7-099800

Int. Cl.⁶ C23C *8/16*

U.S. Cl. 165—133 **8 Claims**

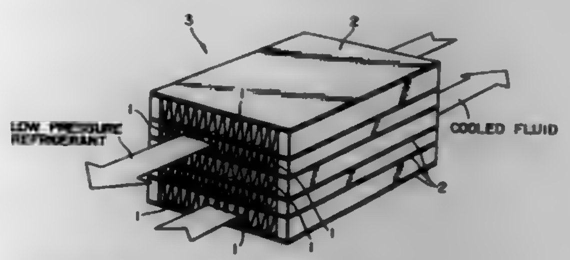

1. A plate fin heat exchanger, comprising:

cooled fluid passages, and

refrigerant passages,

wherein said cooled fluid passages and said refrigerant passages comprise an aluminum alloy and an oxide film on surfaces of said cooled fluid passages and said refrigerant passages, and

said oxide film is prepared by a process comprising reacting said aluminum alloy and an oxidizing gas comprising 25–35 volume % oxygen.

6. A method of making a plate fin heat exchanger, comprising:

forming a hydroxide film on surfaces of cooled fluid passages and refrigerant passages of a plate fin heat exchanger comprising an alumimum alloy, by reacting said aluminum alloy with an aqueous solution comprising 1–7% sodium hydroxide.

5,699,856

BANK OF PLATES FOR HEAT EXCHANGER AND METHOD OF ASSEMBLING SUCH A BANK OF PLATES

Gabriel Merle, Le Creusot, France, assignor to Packinox, Louveciennes, France

Continuation of Ser. No. 64,865, May 24, 1993, abandoned. This application Sep. 5, 1995, Ser. No. 523,679

Claims priority, application France, May 22, 1992, 92 06315

Int. Cl.⁶ F28F *3/00*

U.S. Cl. 165—166 **11 Claims**

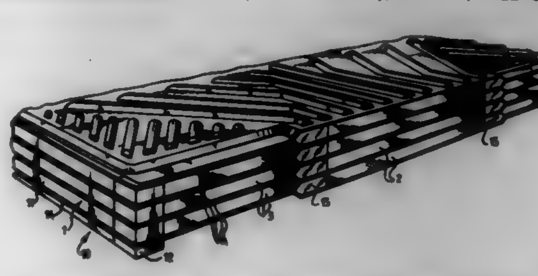

1. A bank of plates for a heat exchanger, said bank comprising a plurality of superposed elements each formed by a pair of parallel plates, each said pair including an upper plate and a lower plate having contiguous longitudinal edges and transverse edges including at least one contiguous portion, each of said parallel plates including an undulated central portion so as to form, with an associated plate of a said pair of parallel plates, a circuit for current flow of a first fluid, an adjacent pair of parallel plates forming a circuit for countercurrent flow of a second fluid, said superposed elements each formed by a pair of parallel plates being linked to each other by at least one longitudinal spacer arranged between said longitudinal edges of adjacent superposed elements formed by a pair of plates and by a corner cleat arranged at corners of said adjacent superposed elements formed by a pair of plates, said longitudinal edges and said corners of each said pair of plates being fixed to said spacers and said corner cleats by a continuous weld bead extending parallel to a direction of flow of said first and second fluids.

5,699,857

VEHICLE CLIMATE CONTROL MULTIPLEX SYSTEM

Gary B. Flaishans, Clarkston; Robert G. Rudzewicz, Sterling Heights, and Michael A. Dahl, Grand Rapids, all of Mich., assignors to Chrysler Corporation, Auburn Hills, Mich.

Continuation of Ser. No. 156,130, Nov. 22, 1993, abandoned. This application Dec. 22, 1995, Ser. No. 579,067

Int. Cl.⁶ F25B *29/00;* **H04Q** *9/00*

U.S. Cl. 165—202 **5 Claims**

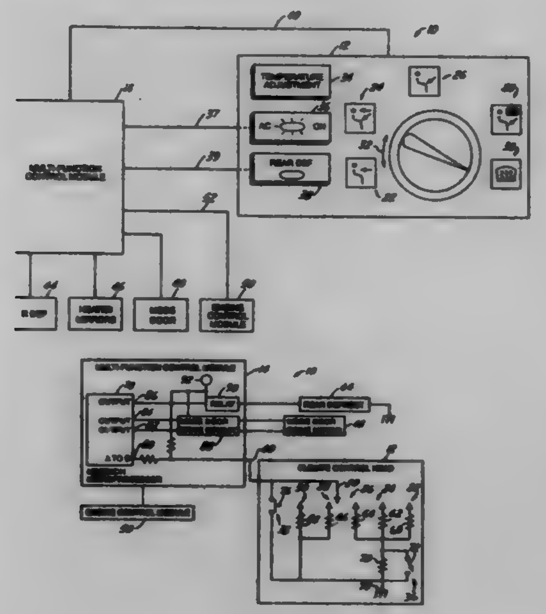

1. A vehicle climate control system, comprising:

a selector for selecting from a plurality of climate control modes of operation, said selector having means for producing an analog control signal, said means including a voltage divider comprising a plurality of discrete resistors, the resistance of each of said resistors defining a selection of a respective mode of air distribution of said plurality of climate control modes of operation such that said analog control signal has a selectively variable voltage value indicating a selected mode of air distribution;

a control module coupled to said selector by a single wire interconnect between said selector and said control module, said control module having means for receiving said analog control signal and for producing a set of digital signals that define the selected mode of air distribution;

a power source coupled to said selector and said control module, respectively;

said resistors having one of their ends respectively coupled to a common terminal;

said selector further comprising a switch for selectively coupling said power source to said common terminal through one of said resistors, said resistor attenuating the voltage of a signal produced by said power source to thereby produce said analog control signal; and

a normally open switch coupled between said power source and said common terminal in parallel with said resistors, said normally open switch being selectively closed to produce a control signal having a constant voltage equal to the voltage value associated with said common terminal.

5,699,858

WELL PUMPING SYSTEM AND INSTALLATION METHOD

Charles W. McAnally, Harvard Station, Sproul Rd., Fort Davis, Tex. 79734

Filed Mar. 18, 1996, Ser. No. 617,126

Int. Cl.⁶ E21B *23/01;43/00*

U.S. Cl. 166—382 **40 Claims**

31. A method for installing a pump system in a well comprising an elongated wellbore extending within an earth formation, said method comprising the steps of:

lowering a pulldown anchor into said wellbore and securing said pulldown anchor at a predetermined position in said wellbore;

moving a casing anchor into said wellbore by pulling said casing anchor into said wellbore with flexible means engaged with said pulldown anchor, said casing anchor being connected to one end of an elongated casing; and

causing said casing anchor to be anchored in said well at a predetermined position while connected to said casing for retaining said casing in said well.

5,699,859

WELL WATER RECIRCULATION VALVE AND METHOD OF MANUFACTURING THEREOF

Blair J. Poirier, P. O. Box 251, Shediac Bridge, New Brunswick, Canada, E0A 3H0

Filed Mar. 11, 1996, Ser. No. 615,334

Int. Cl.⁶ C02F *1/72;* **F04B** *47/06*

U.S. Cl. 166—112 **20 Claims**

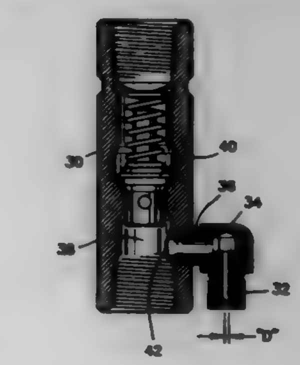

9. A water well recirculation valve for splicing into a well pipe of a well having a submersed pump, at a location below the top of a well but above an average static water level in said well, for recirculating a portion of the water pumped through said well pipe

back into said well for preventing a stagnation of a head portion of said well, said well water recirculation valve comprising an in-line check valve and an orifice communicating through a body of said in-line check valve into an unchecked portion thereof, said orifice being a calibrated opening, a dimension of which being relative to a recommended installation depth of said in-line check valve in said well.

17. A manufacture of a well water recirculation valve comprising the steps of:
obtaining a commercially available in-line check valve;
drilling and tapping a hole through a body of said in-line check valve, into an unchecked portion thereof;
mounting a 90° street elbow fitting in said hole, with a female thread portion of said elbow fitting oriented toward an inlet end of said check valve;
machining a calibrated orifice having a shape of a threaded hollow stem;
mounting in said female thread portion said calibrated orifice.

5,699,860
FRACTURE PROPPING AGENTS AND METHODS
Steven R. Grundmann, Duncan, Okla., assignor to Halliburton Energy Services, Inc., Duncan, Okla.
Filed Feb. 22, 1996, Ser. No. 603,837
Int. Cl.^{6} F21B *43/267*
U.S. Cl. 166—280 **4 Claims**

1. An improved method of propping a fracture in a subterranean formation comprising the steps of:
introducing a propping agent into said fracture consisting of a plurality of small pieces having sizes and densities such that they can be suspended in a fracturing fluid and carried into a fracture thereby, having adequate compressive strength to prevent the closure of said fracture and having passageways formed therethrough containing a dissolvable substance including a gel breaker dissolvable by said fracturing fluid whereby when said substance is dissolved, the permeability of said propping agent to the flow of formation fluids is increased; and
allowing said substance to be dissolved.

5,699,861
MODULAR SHOEING SYSTEM
Robert D. Sigafoos, Kennett Square, Pa., assignor to Trustees of the University of Pennsylvania, Philadelphia, Pa.
Filed Sep. 22, 1995, Ser. No. 532,097
Int. Cl.^{6} A01L *3/02*
U.S. Cl. 168—17 **6 Claims**

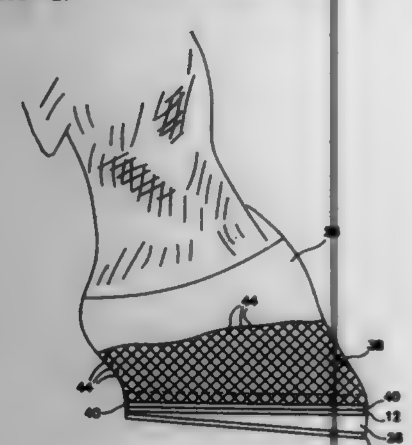

1. A kit for making a horseshoe comprising:
a cast polymeric sole;
a rigid planar member;
a hoof-contacting layer; and
a cuff having a skirt embedded therein and extending therefrom for attachment to a horse's hoof;
wherein each of said sole, planar member, and hoof-contacting layer includes thereon a layer of a heat-activated thermoplastic urethane adhesive and a release layer overlying said adhesive.

5,699,862
FOAM GENERATING DEVICE FOR FIRE-FIGHTING HELICOPTER
Claude Rey, Impasse des Fenêtres, F-84120 La Bastidonne, France
Filed Jul. 23, 1996, Ser. No. 681,384
Claims priority, application France, Jun. 6, 1994, 94 07098
Int. Cl.^{6} B64D *1/18*
U.S. Cl. 169—53 **8 Claims**

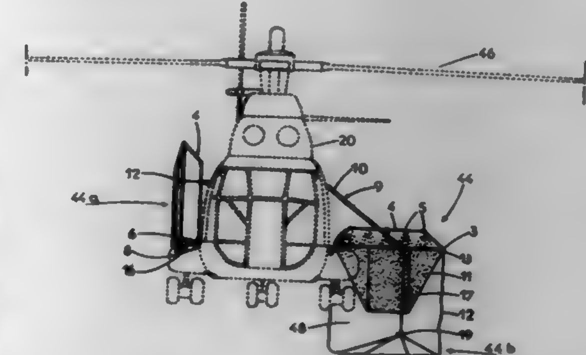

1. A helicopter for fire-fighting, provided with a foam generating device, comprising:
first means for mixing water with a chemical emulsion product or emulsifier under pressure; and
second air-pressurized means for creating expanding foam from the water-emulsifier mixture and for projecting said foam on a site on fire, wherein
said first means are arranged inside the helicopter and include a tank associated with a pump system and a mixer to deliver the mixture of water and emulsifier,
said second means include a projection system with two base modules arranged on side faces outside the helicopter, each said module having a frame mounted pivotally around an axis between an upward inactive position and a lowered active position; a network linked with an outlet pipe of the mixer, the network located under blades of the helicopter and including a grid equipped with a multitude of sprinklers which can spray the mixture of water and emulsifier over a net of tightly knit synthetic material so as to produce the foam by pressurized air generated by the blades; and a lifting device of cables attached to the modules that moves the modules between the upward inactive position and the lowered active position.

5,699,863
APPARATUS FOR GROOMING FIELDS
William L. Figura, Rice Lake, Wis., assignor to Applied Design Technology, Ltd., Chetek, Wis.
Filed Feb. 3, 1994, Ser. No. 191,945
Int. Cl.^{6} A01B *49/02*
U.S. Cl. 172—145 **16 Claims**

1. Apparatus for grooming fields comprising:
an elongated tool bar having a forward portion, a bottom portion, a top portion, a first end, a second end, and a rearward portion;

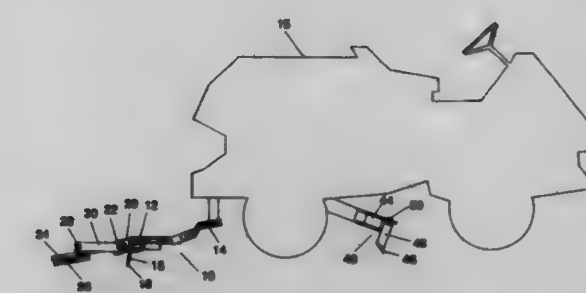

means for attaching said tool bar to a motor vehicle so that said forward portion is proximate to said motor vehicle and the tool bar is oriented generally perpendicular to the ordinary direction of travel of said motor vehicle;
a leveling trowel affixed to and dependent from said tool bar so that said leveling trowel comes into contact with the field to be groomed;
means for attaching a pivot rod to said tool bar;
a multiplicity of elongated parallel-aligned flails pivotally disposed upon said pivot rod and extending rearward from said pivot rod, said flails each being comprised of:
means for pivotal attachment to said pivot rod,
an upper portion,
a flattened, soil-contacting lower portion, and
a multiplicity of soil-working protrusions dependent from said soil-contacting lower portion; and
biasing means for biasing said flails against the soil.

5,699,864
MARINE ANCHORING APPARATUS
Ryan T. Dvorak, 3670 N. Moorpark Rd., Thousand Oaks, Calif. 91360, and Richard T. Dvorak, 2991 Molly Ct., Newbury Park, Calif. 91320
Continuation-in-part of Ser. No. 505,467, Jul. 21, 1995, abandoned. This application Apr. 12, 1996, Ser. No. 631,068
Int. Cl.^{6} B25D *1/04;1/14*
U.S. Cl. 173—91 **9 Claims**

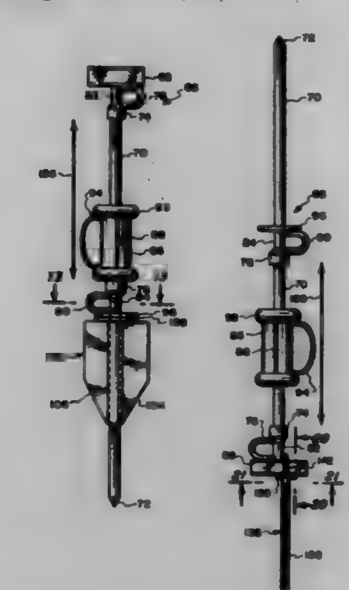

1. A marine anchoring apparatus comprising:
a) a slide hammer tool, said slide hammer tool comprising:
an elongated stake having a lower end and an upper end, said lower end being sharply pointed and said upper end terminating in a transverse head;
a lower abutment fixedly mounted on said elongated stake, said lower abutment being spaced from both said upper end and said lower end;
an upper abutment fixedly mounted on said elongated stake, said upper abutment being located directly adjacent said upper end;
at least one tie down ring secured to said elongated stake;
a hammer slidably mounted on said elongated stake and located between said upper abutment and said lower abutment, whereby said hammer is to be repeatedly moved and impacted against said lower abutment to drive said elongated stake into a supporting surface securing such and then permitting securing of a tie down rope to said at least one tie down ring;
b) at least one finned attachment having a central bore configured to receive the lower end of said elongated stake;
c) at least one tent stake having an opening in an upper portion thereof, configured to receive said transverse head of said elongated stake, said hammer to be moved against said upper abutment to cause penetration of said tent stake into the supporting surface;
wherein, the lower end of said elongated stake can be driven into the supporting surface by said repeated impacting; and wherein, one of said at least one finned attachment can be received on the lower end of said elongated stake prior to the elongated stake being driven into the supporting surface, thereby permitting the slide hammer tool to be removed while the one of said at least one finned attachment remains in the supporting surface; and wherein, the upper end of said elongated stake can receive one of said at least one tent stake and said hammer is impacted against said upper abutment to drive the one of said at least one tent stake into the supporting surface and said hammer is impacted against said lower abutment to remove the one of said at least one tent stake from the supporting surface.

5,699,865
ANTIVIBRATION DEVICE FOR MOUNTING BETWEEN A MOTOR UNIT AND A HANDLE UNIT
Karl Förderer, Schwaikheim; Klaus Höppner, Marbach, and Gerd Fricke, Waiblingen, all of Germany, assignors to Andreas Stihl, Waiblingen, Germany
Filed Aug. 9, 1996, Ser. No. 693,634
Claims priority, application Germany, Aug. 21, 1995, 195 30 712.7
Int. Cl.^{6} B25D *17/00;* **F16F** *1/36*
U.S. Cl. 173—162.2 **20 Claims**

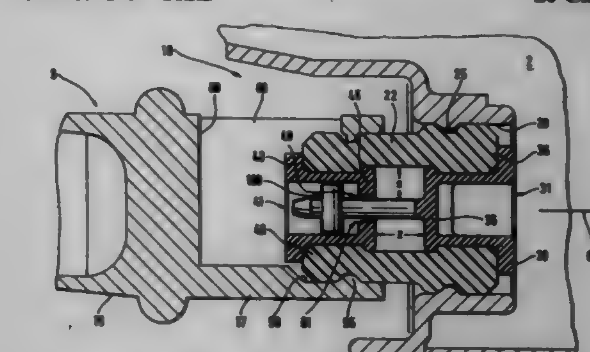

1. An antivibration device between a motor unit and a handle unit of a portable handheld work apparatus such as a motor-driven chain saw, cutoff machine or the like, the antivibration device comprising:
a first receptacle formed in said handle unit;
a second receptacle formed in said motor unit;
a sleeve-shaped elastic base body having a first end portion mounted in said first receptacle and having a second end portion mounted in said second receptacle;
a first plug axially seated and anchored in said first end section to fix said first end section in said first receptacle;
a second plug axially seated and anchored in said second end section to fix said second end section in said second receptacle;

said first and second plugs being spaced apart from each other an axial distance (z);
said second plug including a coupling member bridging said axial distance (z) between said plugs; and,
said coupling member including latching means for projecting into and engaging said first plug so as to cause said second plug to be axially inseparably connected to said first plug.

5,699,866
SECTIONAL DRIVE SYSTEM
James E. Cousins, Shreveport; George R. Markiel, Benton, and Ruben C. Boyter, Shreveport, all of La., assignors to Perf Drill, Inc., Shreveport, La.
Filed May 10, 1996, Ser. No. 644,372
Int. Cl.⁶ E21B *7/08*
U.S. Cl. 175—78 **20 Claims**

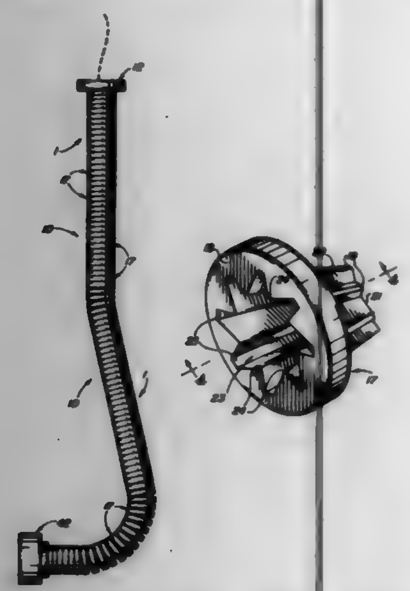

1. A sectional drive system for coupling a drive to an output, comprising at least two segments connected to the drive and the output, said segments comprising a round head, multiple asymmetrical exterior splines tapering in spaced relationship with respect to each other from said round head to define spline edges, said spline edges of said asymmetrical exterior splines terminating in a tip and said asymmetrical exterior splines defining multiple asymmetrical interior spline seats disposed at a rotational offset angle in the range of from about 4 degrees to about 8 degrees displaced from said asymmetrical exterior splines, for receiving said asymmetrical exterior splines of adjacent ones of said segments, whereby said segments are interlocked in stacked relationship to connect the drive to the output.

5,699,867
BIT RETENTION DEVICE FOR A BIT AND CHUCK ASSEMBLY OF A DOWN-THE-HOLE, PERCUSSIVE DRILL
William Leslie Jones, Moneta, Va., assignor to Ingersoll-Rand Company, Woodcliff Lake, N.J.
Division of Ser. No. 662,725, Jun. 10, 1996. This application Jul. 31, 1996, Ser. No. 688,933
Int. Cl.⁶ E21B *4/14*
U.S. Cl. 175—296 **5 Claims**

2. A bit for a down-the-hole percussive drill, the bit adapted for use in an assembly for retaining a head section of the bit should the head section separate from a shank of the bit comprising:
(a) an axially extending shank terminating in an upper distal end, said shank terminating at a lower portion in a radially

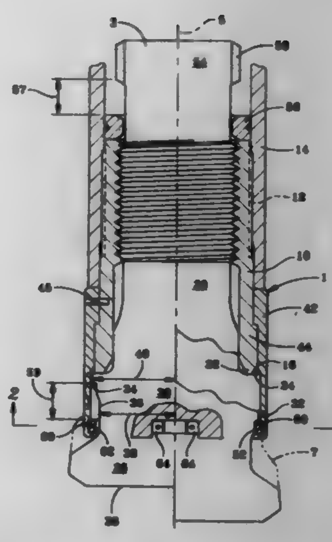

extending first shoulder, said first shoulder having an upper surface facing said upper distal end of said shank,
(b) a bit head having a working bit face;
(c) an upper bit head portion adjacent to said first shoulder forming a radially extending second shoulder, said second shoulder having a lower surface facing said working bit face;
(d) an annular undercut head portion adjacent to said second shoulder, said annular undercut portion extending axially along said bit head toward said working bit face, said undercut portion having a radial diameter that is smaller than a radial diameter of said second shoulder; and
(e) a third radially extending shoulder adjacent said upper distal end.

5,699,868
ROTARY DRILL BITS HAVING NOZZLES TO ENHANCE RECIRCULATION
Douglas Caraway, Kingwood, Tex.; Graham Watson, Frampton-on Severn, England, and T. Alex Newton, Houston, Tex., assignors to Camco Drilling Group Limited, Stonehouse, England
Filed Apr. 24, 1996, Ser. No. 637,985
Claims priority, application United Kingdom, May 11, 1996, 9509555
Int. Cl.⁶ E21B *10/18*
U.S. Cl. 175—339 **12 Claims**

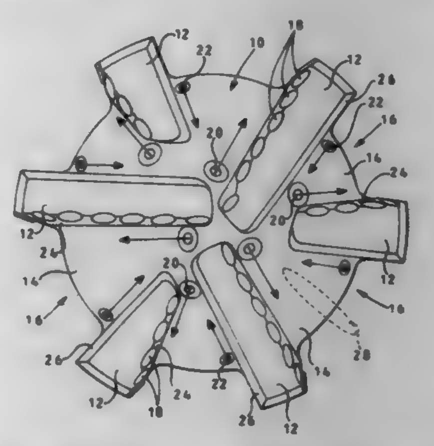

1. A rotary drill bit for use in drilling holes in subsurface formations comprising a bit body having a leading face and a gauge region, a plurality of blades formed on the leading face of the bit body and extending outwardly away from the axis of the bit towards the gauge region so as to define a fluid flow channel between the leading edge of each blade and the trailing edge of the adjacent preceding blade, and a plurality of curing elements mounted along the leading edge of each blade, wherein there is provided, in at least one of said channels, a main nozzle which is located and orientated so as to direct at least the majority of fluid emerging therefrom along the leading edge of one blade so as to clean and cool the cutting elements mounted thereon, and a subsidiary nozzle which is located and orientated so as to direct at least the majority of fluid emerging therefrom along the trailing edge of the blade preceding said one blade in a direction substantially opposite to the direction of flow of fluid from the main nozzle, so as to tend to enhance partial recirculation of fluid flow in said flow channel between the blades.

5,699,869
AUTOMATICALLY ENGAGING AND DISENGAGING GEAR BOX ASSEMBLY
Daniel D. Fritzinger, Grabill, and Craig R. Hall, Fort Wayne, both of Ind., assignors to Mattel, Inc., El Segundo, Calif.
Filed May 25, 1995, Ser. No. 450,376
Int. Cl.⁶ B60K *17/14*
U.S. Cl. 180—65.5 **16 Claims**

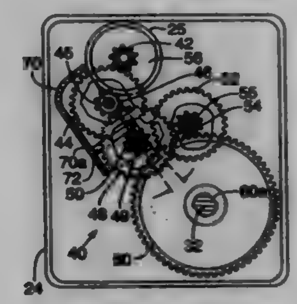

1. In a vehicle which includes a driven axle shaft extending transversely of the vehicle having wheels secured thereto and an output gear concentric with the axle shaft non-rotatably connected thereto:
a first gear mounted on the vehicle rotatable about a rotation axis;
an electric motor with an output shaft mounted adjacent the first gear with the output shaft paralleling the rotation axis and having a pinion mounted thereon, with the pinion in driving contact with the first gear;
a second gear in driving contact with the first gear; and
a yoke pivotally mounted about the rotation axis of the first gear and providing a mount for the second gear, wherein the yoke pivots to one position wherein the second gear engages the output gear and drives the vehicle's wheels when the motor is energized, and the yoke pivots to another position wherein the second gear disengages the output gear and allows the vehicle's wheels to rotate freely when the motor is de-energized.

5,699,870
ELECTRIC SHIFT TRANSFER CASE SYSTEM FOR AN AUTOMOBILE
James David Warren, Clayton, N.C., assignor to Borg-Warner Automotive, Inc., Sterling Heights, Mich.
Filed May 1, 1995, Ser. No. 432,961
Int. Cl.⁶ B60K *17/354*
U.S. Cl. 180—247 **8 Claims**

1. In an electric shift transfer case system (10) for an automobile having first and second electronically selectable drive modes, said electric shift transfer case system having a transfer case (14) and an electronic control circuit (16),
said transfer case (14) having a rotatable input shaft (40), first and second rotatable output shafts (22,30), and a selectively engagable coupling (38) between said input shaft and said

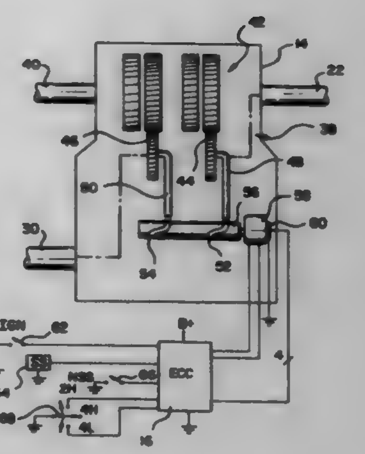

second output shaft to permit drive torque to be transferred from said input shaft to said second output shaft,
said transfer case (14) further including a direct current electric shift motor (58) having first and second terminals (58*a*,58*b*) electrically connected to said electronic control circuit (16), with said electric shift motor being mechanically connected to said coupling (38) to shift the vehicle from the first drive mode to the second drive mode when rotating in a first direction and to shift the vehicle from the second drive mode to the first drive mode when rotating in a second direction,
said electronic control circuit (16) having a microprocessor (73) and a motor drive circuit (70) with said motor drive circuit connected to said electric shift motor (58) and operable under control of said microprocessor to drive current through said electric shift motor in either of two directions to thereby rotate said electric shift motor in either of said first and second directions,
said motor drive circuit (70) having a plurality of semiconductor switches (74–77) connected in circuit to selectively connect each of said terminals (58*a*,58*b*) of said electric shift motor (58) to a power source and to a return path for the power source, whereby said semiconductor switches (74–77) and said electric shift motor (58) together form an H-bridge, said motor drive circuit further including a command input for each of said semiconductor switches, each of said semiconductor switches being electronically switchable by its associated command input between an electrically conductive state and an electrically non-conductive state, whereby certain combinations of voltage levels on said command inputs result in desirable combinations of conductive and non-conductive states of said switching elements and certain other combinations of voltage levels on said command inputs result in undesirable combinations of conductive and non-conductive states of said semiconductor switches,
said electronic control circuit (16) having an interface circuit (72) coupled to said command inputs of said motor drive circuit (70) and to a clockwise, counterclockwise, and enable output of said microprocessor (73), said interface circuit comprising a combinational logic circuit responsive to any combination of voltage levels on said clockwise, counterclockwise, and enable outputs to provide a combination of voltage levels on said command inputs that results in one of said desirable combinations of conductive and non-conductive states of said semiconductive switches (74–77), whereby said undesirable combinations of conductive and non-conductive states of said semiconductor switches are prevented;
wherein said electric shift transfer case system (10) is characterized by:
one of said semiconductor switches (74–77) being connected to receive said clockwise output, another of said semiconductor switches being connected to receive said counterclockwise output, and the remaining two of said semiconductor switches being connected to receive control signals that are generated by said interface circuit (72) using said enable output and at least one of said clockwise and counterclockwise outputs.

5,699,871
DRIVING FORCE TRANSFER APPARATUS FOR FOUR-WHEEL DRIVE VEHICLE

Tomoyuki Hara, Isehara; Kenichi Tohta, Zama; Tsutomu Niimi; Izumi Amemiya, both of Isehara, and Toshiharu Takasaki, Sagamihara, all of Japan, assignors to Nissan Motor Co., Ltd., Yokohama, Japan

Filed Sep. 13, 1995, Ser. No. 527,695
Claims priority, application Japan, Sep. 21, 1994, 6-226464; Sep. 21, 1994, 6-226465; Sep. 21, 1994, 6-226467; Sep. 21, 1994, 6-226475
Int. Cl.6 B60K 23/00
U.S. Cl. 180—247 17 Claims

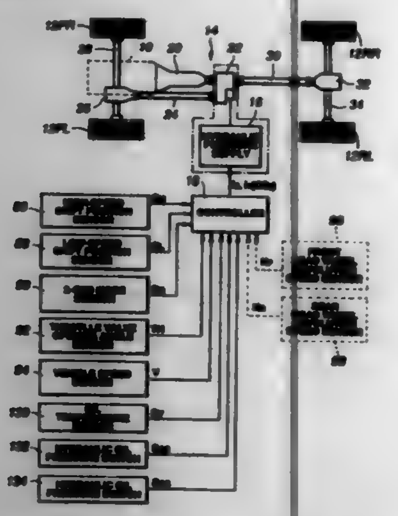

1. A driving force transfer apparatus for a four-wheel drive vehicle having mainly driven road wheels and secondarily driven road wheels, and a vehicular power transmission with an output axle, comprising:

a) an input axle connected to said output axle of said vehicular power transmission;
b) a first output axle operatively connected to said mainly driven road wheels;
c) a second output axle operatively connected to said secondarily driven road wheels;
d) a sub transmission mechanism, having mesh clutching means for operatively switching at least between a relatively high-speed gear range position and a relatively low-speed gear range position, said sub transmission mechanism being arranged and constructed to transmit a driving force from said power transmission via said input axle to said first output axle according to the switched position set through said mesh clutching means;
e) a two-wheel-and-four-wheel drive switching mechanism having frictional cluching means and working fluid pressure varying means, a clutching force of said frictional clutching means being varied according to a working fluid pressure applied thereto from said working fluid pressure varying means so that the driving force transmitted to said first output axle is distributed to the second output axle at a torque distribution ratio determined according to the clutching force of the frictional clutching means;
f) detecting means for detecting a running condition of the vehicle, wherein said detecting means includes a throttle valve opening angle sensor for detecting an opening angle of an engine throttle valve and a vehicle speed sensor for detecting a vehicle running speed;
g) controlling means for outputting a control signal to said working fluid pressure varying means to vary the working fluid pressure applied to said frictional clutching means on the basis of a result of the detection of the vehicle running condition, wherein said controlling means comprises determining means for determining a region in the vehicle speed where the difference between the revolution speeds of said first and second output axles is relatively small on the basis of a variation in the throttle valve opening angle detected by the throttle valve opening angle sensor during a relatively low speed run of the vehicle and a relatively high speed run of the vehicle, wherein said controlling means outputs the control signal so that the pressure of the working fluid in said working fluid varying means is relatively low so that a relatively slight junction in the frictional clutching means occurs according to the detected running condition of said detecting means and the determined region where the difference between revolutions speeds of said first and second output axles becomes relatively small when said sub transmission mechanism is switched into the low-speed gear range position;
h) first and second dog clutches for forcefully connecting the first output axle to the second output axle so that the four road wheels are forced into a four-wheel drive state during the low-speed gear range position switched through said sub transmission mechanism, said first dog clutch having first teeth operatively provided at a side of said first output axle and said second dog clutch having second teeth operatively provided at a side of said second output axle; and
i) smoothly meshing means for smoothly meshing said first and second dog clutches to lower the chance of impinging the tips of said first and second teeth, wherein at least one of said first and second dog teeth has a width that is narrower than a teeth spacing formed between two adjacent teeth in a peripheral direction of said one of said first and second teeth to provide a play in each tooth spacing when first and second dog teeth are meshed into each other to provide smooth meshing.

5,699,872
STRUCTURE AND METHOD FOR EASY ACCESS TO AND MAINTENANCE OF ACCESSORIES IN A VEHICLE WITHOUT REMOVING A POWER UNIT

Futoshi Miyakawa; Masahiro Kawamata; Yoshiaki Hamada; Kosuke Aono, and Tsuneo Kajikawa, all of Saitama, Japan, assignors to Honda Giken Kogyo Kabushiki Kaisha, Tokyo, Japan

Filed Jun. 7, 1995, Ser. No. 478,806
Claims priority, application Japan, Jul. 12, 1994, 6-160316
Int. Cl.6 B60K 13/04
U.S. Cl. 180—291 27 Claims

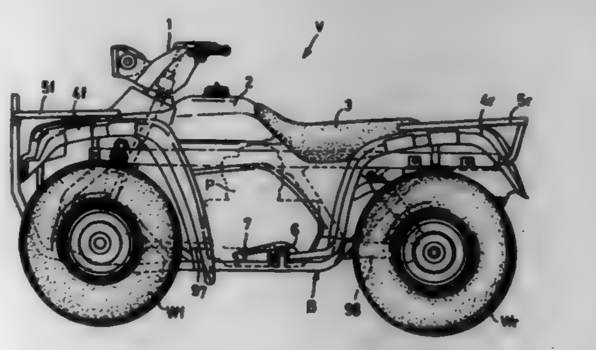

1. A vehicle comprising:
a power unit having a crank shaft disposed in a longitudinal direction of a vehicular body of the vehicle;
a pair of front wheels and a pair of rear wheels respectively provided on front and rear portions of said vehicular body; p1 means for mounting said crank shaft between said pair of front wheels and said pair of rear wheels;
an accessory removably provided at an end portion of said crank shaft; and
a removable cover covering said accessory; whereby an operational space is provided within said vehicular body at least either one of in front of and in back of said removable cover; said operational space being large enough to receive a tool for engaging said accessory without moving the power unit.

5,699,873
OPERATION CONTROL SYSTEM FOR TRAVELING VEHICLE

Yukio Moriya; Satoru Koyanagi; Tetsuya Fujimura; Masayuki Nagahama; Kazuyuki Yamazaki, and Toru Hishiyama, all of Kawasaki, Japan, assignors to Kabushiki Kaisha Komatsu Seisakusho, Tokyo, Japan

Division of Ser. No. 379,603, Feb. 2, 1995, Pat. No. 5,609,220.
This application Oct. 31, 1996, Ser. No. 741,824
Claims priority, application Japan, Aug. 27, 1992, HEI. 4-228603; Apr. 26, 1993, HEI. 5-99535
Int. Cl.6 B62D 7/08
U.S. Cl. 180—402 5 Claims

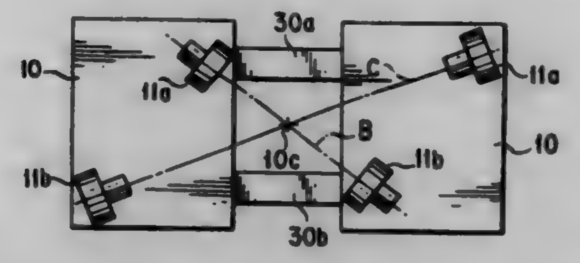

1. An operation control system for a plurality of traveling vehicles coupled together, each vehicle having first and second driving wheels located at diagonally spaced positions along one diagonal line of a vehicle body thereof for turning by means of respective turning actuators coupled to said driving wheels, the operation control system comprising:
a traveling mode selection changeover device mounted to each traveling vehicle for selecting a desired traveling mode among a plurality of traveling modes; and
a control unit mounted in each vehicle for controlling driving of at least one of said turning actuators of a respective said vehicle in response to a traveling mode signal input from either one of said traveling mode selection changeover devices, to turn the respective driving wheel associated with said at least one turning actuator to a predetermined initial position in the selected traveling mode, the control unit of each vehicle being connected to the control unit of at least one other of said vehicles.

5,699,874
ELECTRIC POWER STEERING APPARATUS

Yasuhiko Miyaura, Gunma, Japan, assignor to NSK Ltd., Tokyo, Japan

Filed Dec. 29, 1995, Ser. No. 592,836
Claims priority, application Japan, Jan. 11, 1995, HEI 7-018409
Int. Cl.6 B62D 5/04
U.S. Cl. 180—443 3 Claims

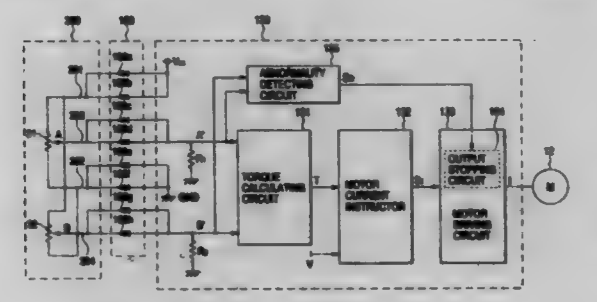

1. An electric power steering apparatus, comprising:
a steering torque detector for detecting a steering torque of a steering system;
an electric motor for generating a steering auxiliary force to the steering system;
a control apparatus for controlling the steering auxiliary force generated by said electric motor in response to the steering torque detected by said steering torque detector;
first lines for electrically connecting said steering torque detector to said control apparatus, at least one of said first lines being connected to a second line in parallel; and
a contact part having detachable contact portions separately disposed in each of said first lines and said second line, said detachable contact portion disposed in said one of said first lines being positioned between two points where said one of said first lines is connected to said second line.

5,699,875
LIFELINE ANCHOR

Joseph T. Dugan, Jackson, Wis., assignor to Spancrete Industries, Inc., Milwaukee, Wis.

Filed Oct. 31, 1995, Ser. No. 550,576
Int. Cl.6 A62B 35/00
U.S. Cl. 182—3 4 Claims

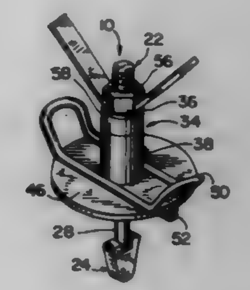

1. A lifeline anchor for securing a safety lifeline to a pre-cast concrete assembly having a gap formed by inner walls between abutting concrete panels comprising:
a vertically oriented coil rod adapted to be received in said gap formed between the inner walls of said abutting concrete panels, said coil rod having an anchoring member located on a lower end and a threaded portion provided on an upper end, said threaded portion being formed with a longitudinally extending key way;
a collar assembly disposed around said coil rod said collar assembly having a flat disk at a lower end constructed and arranged to overlie an upper surface of the abutting concrete panels, said flat disk having a central bore through which said coil rod extends and an anchor loop to which a lifeline may be attached, said flat disk further including a pair of spaced apart, downwardly depending, aligned guide bars adapted to sit in said gap, said guide bars having opposed, parallel facing ends spaced apart by said central bore, each of said guide bars extending radially from said central bore to a periphery of said flat disk, said collar assembly further includes a cylindrical spacer disposed on top of said flat disk and over said central bore, and a cylindrical collar secured on top of said cylindrical spacer, said collar including a key engageable with said key way such that rotation of said collar assembly will cause simultaneous rotation of said coil rod; and
a nut-handle assembly rotatably mounted on said threaded portion of said coil rod: said nut handle assembly having a pair of upwardly and outwardly diverging handles;
whereby with said guide bars disposed above said upper surface of the abutting panels and said anchoring member disposed in said gap, rotation of said collar assembly when keyed to said coil rod will cause the periphery of said anchoring member to lie within the inner walls forming said gap between said abutting concrete panels and permit said guide bars to drop down and sit in said gap to prevent further rotation of said collar assembly and said coil rod, and whereby subsequent rotation of said nut-handle assembly against said collar

assembly draws said coil rod and said anchoring member upwardly to positively lock said anchoring member in the pre-cast concrete assembly.

5,699,876
COLLAPSIBLE RAILING FOR MOUNTING ON A VEHICLE ROOF
Thomas Erwin Satchwell, III, 1036 LaSalle St., Jacksonville, Fla. 32207
Filed Dec. 6, 1995, Ser. No. 567,910
Int. Cl.⁶ E06C *5/00*
U.S. Cl. 182—127 **3 Claims**

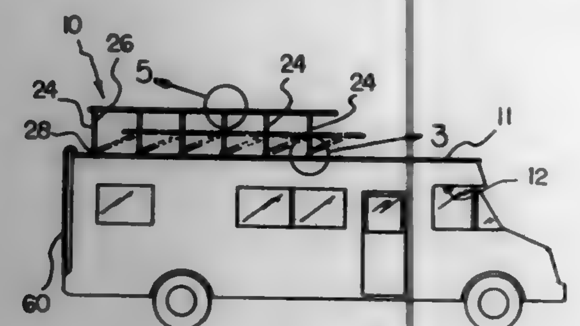

1. A new and improved collapsible railing comprising, in combination:
a vehicle with a roof;
a generally rectangular railing including a tubular rod with a linear rear section, an arcuate front section, and a pair of linear side sections defining an interior space;
a plurality of collapsible stanchions, each of the stanchions having an upper end and a lower end, the lower end comprising a base mounted to the roof of the vehicle and a pivotal means allowing each of the stanchions to collapse;
a plurality of generally T-shaped sleeve joints, each of the sleeve joints having a horizontal upper sleeve secured about the railing and a lower sleeve pivotally coupled to the upper sleeve and secured about the upper end of the corresponding stanchion; and
a ladder access section comprising a portion of the railing adjacent to a ladder coupled to the vehicle, the ladder access section hingably coupled at a first end to a sleeve joint and releasably coupled at a second end to a sleeve, the ladder access section further having an upright orientation for allowing access to the interior space of the railing and a prone orientation for precluding access thereto;
wherein at least one of the pivotal means comprises a locking hinge having a circular first portion with a plurality of teeth formed in an exterior periphery thereof and a threaded aperture centrally disposed therein, the first portion coupled to the base of the stanchion; a circular second portion with a plurality of teeth formed in an interior periphery thereof and a threaded aperture centrally disposed therein, the second portion having a sleeve coupled thereto for securing about the lower end of the stanchion; and a wing bolt for inserting within the threaded apertures and having a first disengaged orientation for allowing disengagement of the teeth thereby allowing the stanchions and railing to swivel between an upright and collapsed position, the wing bolt further having an inserted orientation for allowing engagement of the teeth thereby precluding the stanchions and railing from swiveling between the upright and collapsed position.

5,699,877
OIL-SLINGER DEVICE PROVIDED WITH A PROJECTION ENGAGING A MATING RECEIVER FORMED IN A TRANSMISSION HOUSING
Loren Christopher Dreier, Milford, Mich., assignor to ZF Friedrichshafen AG, Friedrichshafen, Germany
Filed Oct. 10, 1996, Ser. No. 728,745
Claims priority, application Germany, Oct. 13, 1995, 195 38 192.0
Int. Cl.⁶ F01M *1/00*
U.S. Cl. 184—11.2 **11 Claims**

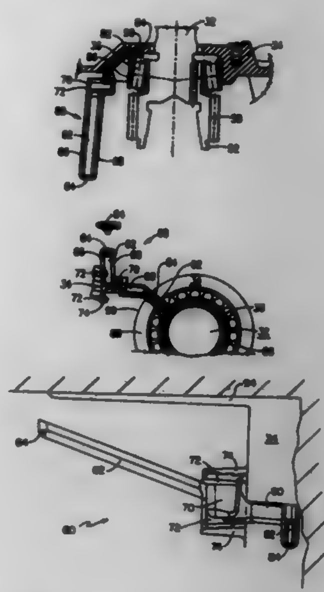

1. An oil-slinger device (60) for a bearing (36) on a shaft (32) located within a transmission housing (34) of a vehicle (2), and said transmission housing (34) comprising a side wall and accommodating therein a plurality of gears and at least an input shaft and an output shaft;
wherein said oil-slinger device (60) has a first end (84) and a second end and an intermediate section located therebetween, at least one projection (72) is provided on said oil-slinger device (60), said at least one projection (72) engages with at least one mating receiver (74) provide in said side wall of said transmission housing (34) to form a positive locking connection therebetween, said first end (84) of said oil-slinger device (60) is located between said bearing (36) to be supplied with oil and said side wall of said transmission housing (34) so as to prevent displacement of said oil-slinger device (60) relative to said transmission housing (34) and thereby maintain the positive locking connection between said at least one projection (72) and said at least one receiver (74).
11. A process for using an oil-slinger device (60) comprising the steps:
locating an oil-slinger device (60) within a transmission housing (34) of a vehicle (2) and adjacent a bearing (36) of a shaft (32), said transmission housing (34) comprising a side wall and accommodating therein a plurality of gears and at least an input shaft and an output shaft;
providing said oil-slinger device (60) with a first end (84) and a second end;
engaging at least one projection (72) on said oil-slinger device (60) with at least one receiver (74) provided in said side wall of said transmission housing (34) to form a positive locking connection therebetween; and
situating said first end (84) of said oil-slinger device (60) between said bearing (36) to be supplied with oil and said side wall of said transmission housing (34) so as to prevent displacement of said oil-slinger device (60) relative to said transmission housing (34) and thereby maintain the positive locking connection between said at least one projection (72) and said at least one receiver (74).

5,699,878
CONVEYOR ELEVATING TECHNIQUES
Robert F. Oury, Gilberts; Mark S. Dingeldein, Lombard; Alan S. Ledger, Addison, and Joseph P. Gallione, Naperville, all of Ill., assignors to Rotec Industries, Elmhurst, Ill.
Filed Apr. 15, 1996, Ser. No. 631,935
Int. Cl.⁶ B66F *9/22*
U.S. Cl. 187—234 **13 Claims**

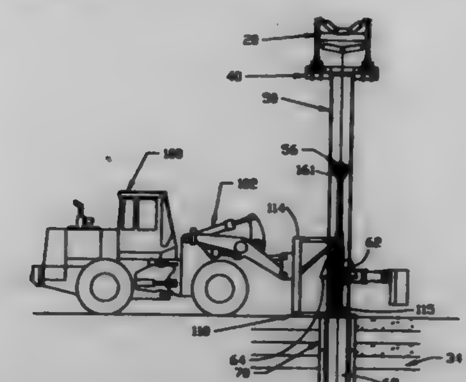

10. An attachment for a self powered vehicle including a hydraulic lifting system for raising a conveyor supported on a post comprising a horizontal cross bar including a first portion extending on a first side of said post and a second portion extending on a second side of said post opposite said first side, said conveyor being raised above the surface of a poured concrete structure as the structure is formed, said attachment comprising in combination:
a hydraulic first piston;
a first saddle attached to said first piston for engaging said first portion of said cross bar;
a hydraulic second piston;
a second saddle attached to said second piston for engaging said second portion of said cross bar;
a hydraulic third piston;
a hinged first arm coupled to said third piston for lifting a first segment of a base;
a hydraulic fourth piston;
a hinged second arm coupled to said fourth piston for lifting a second segment of said base;
a frame for supporting said first piston, second piston, third piston and fourth piston; and
means for coupling said first piston, second piston, third piston and fourth piston to said hydraulic lifting system of said self propelled vehicle and for attaching said frame to said vehicle so that said frame can be moved adjacent said post, said post can be elevated by said first and second saddles, said first and second segments can be positioned around said post by said first and second arms, and said post can be lowered whereby a collar coupled to said post engages said first and second segments to support said post and conveyor system in an elevated position.

5,699,879
ELEVATOR SYSTEM
Masami Sakita, 1259 El Camino Real #121, Menlo Park, Calif. 94025
Filed May 6, 1996, Ser. No. 642,855
Int. Cl.⁶ B66B *9/00*
U.S. Cl. 187—249 **13 Claims**

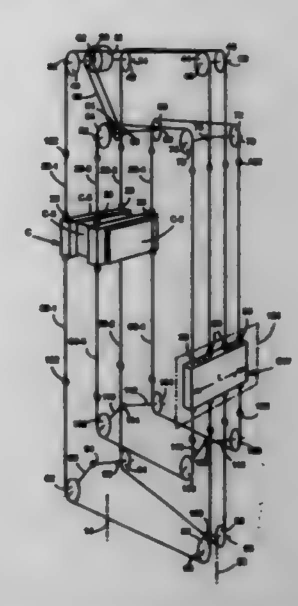

1. An elevator system for a multistory structure comprising,
an elevator shaft having front, rear and opposite side walls,
a first elevator car having front, rear and opposite side walls in said elevator shaft movable along a first vertical axis,
a first counterweight in said elevator shaft movable along a second vertical axis adjacent the rear wall of the elevator shaft which counterweight includes front, rear and opposite side surfaces,
first drive rope means including a first plurality of drive ropes connected to said first elevator car and to said first counterweight at locations along the length of said first counterweight,
first drive means above the first elevator car connected to said first drive rope means for simultaneously moving said first elevator car and first counterweight in opposite directions along said first and second axes, respectively,
a second elevator car in said elevator shaft beneath said first elevator car and movable along said first vertical axis independently of said first elevator car, said second elevator car having front, rear and opposite first and second side walls,
a second counterweight in said elevator shaft above said first counterweight and movable along said second vertical axis, which second counterweight includes front, rear and opposite side surfaces,
second drive rope means including a second plurality of drive ropes connected to said second elevator car adjacent said opposite side walls of the second elevator car and to said second counterweight along the length of said second counterweight,
vertical apertures in the second counterweight through which said first drive rope means extend in connection of the first drive rope means to said first counterweight,
second drive means above the first elevator car connected to said second drive rope means for simultaneously moving said second elevator car and second counterweight in opposite directions along said first and second axes, respectively,
said second drive means including,
a drive motor having a motor shaft extending substantially parallel to the rear wall of the elevator shaft,
first and second non-parallel drive shafts extending obliquely relative to the rear wall of the elevator shaft connected to said motor shaft for simultaneous rotation upon operation of said drive motor,
first and second drive sheaves affixed to said first and second drive shafts, respectively,
first and second idler sheaves above said first and second counterweights,
said second plurality of drive ropes including first and second drive ropes,
said first drive rope extending between said first drive sheave and first idler sheave obliquely over said first elevator car, and
said second drive rope extending between said second drive sheave and second idler sheave obliquely over said first elevator car.

5,699,880

BRAKE ADJUSTMENT INDICATOR

Des Hockley, North York, Canada, assignor to Mr. Safety Check Systems Inc, Concord

Filed Jun. 3, 1996, Ser. No. 660,223

Int. Cl.[6] F16D *66/02*

U.S. Cl. 188—1.11 20 Claims

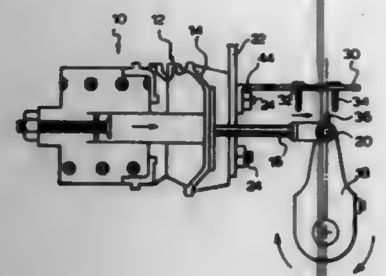

1. A brake adjustment indicator for a braking system for a vehicle, the braking system including a pressure chamber, a push-rod extending longitudinally outwards from the pressure chamber and moveable when correctly adjusted between first and second positions, a brake arm and a pivot for pivotally mounting the pushrod to the brake arm, said brake adjustment indicator comprising:

(a) an indicator adapted to be mounted for longitudinal movement with the pushrod;

(b) a support member having a first portion and a second portion, said first portion adapted to be mounted to the vehicle, said support member configured to position said second portion opposite to said indicator;

(c) a first reference member positionable on said second portion of said support member for marking the first position and a second reference member positionable on said second portion of said support member for marking the second position;

(d) a locating member for positioning said first reference member in a preselected position relative to said second reference member; and,

(e) at least one locking member for releasably mounting said first and second reference members on said second portion, said locking member moveable between a first position in which said first and second reference members are fixed in position on said second portion of said support member and a second position in which said first and second reference members are moveable as a unit with respect to said indicator on said second portion.

5,699,881

MULTI-DISC BRAKE ACTUATOR FOR VIBRATION DAMPING

Fred William Berwanger, South Bend, Ind., and Daniel S. Reynolds, Long Beach, Calif., assignors to AlliedSignal Inc., Morristown, N.J.

Continuation-in-part of Ser. No. 626,660, Mar. 22, 1996. This application Nov. 27, 1996, Ser. No. 757,493

Int. Cl.[6] F16D *55/36*

U.S. Cl. 188—71.5 11 Claims

1. A multi-disc brake and actuator for vibration damping, comprising a multi-disc brake disposed about axle means and including a piston housing engaging a torque tube, the piston housing and torque tube circumferentially movable relative to the axle means, a first plurality of discs engaging the torque tube, a second plurality of discs for engagement with a wheel, the piston housing being located axially between an actuator and a first axially stationary member at the axle means, and a thrust sleeve engaging a second axially stationary member at the axle means, operation of the actuator causing an actuator member to extend axially and compress the piston housing between the actuator member and first

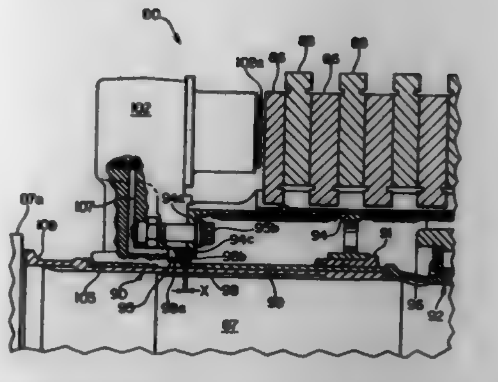

axially stationary member in order to reduce vibrational movement of the piston housing and torque tube relative to the axle means.

5,699,882

PAD CLIP FOR DISC BRAKE

Hiroshi Ikegami; Yutaka Nishikawa, and Masanori Ando, all of Saitama, Japan, assignors to Akebono Brake Industry Co., Ltd., Tokyo, Japan

Filed Mar. 15, 1996, Ser. No. 616,652

Claims priority, application Japan, Mar. 16, 1995, 7-084744; Mar. 22, 1995, 7-088712

Int. Cl.[6] F16D *65/02*

U.S. Cl. 188—73.38 11 Claims

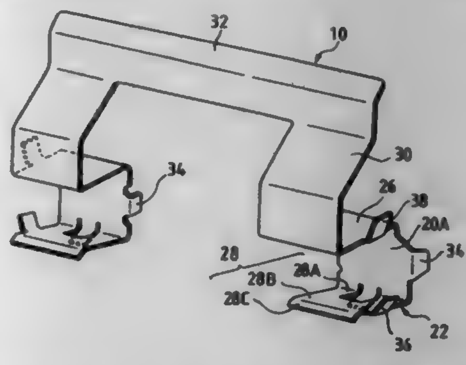

1. A pad clip for a disc brake, the disc brake comprising a friction pad disposed opposite to a rotor and a support member for bearing braking force from the friction pad, wherein one of a convexity and a concavity is formed at a side edge portion of the pad and the other is formed at a braking anchor portion of the support member, the convexity and the concavity engage with each other so as to form a concave and convex fitting portion, and the pad clip is disposed at the concave and convex fitting portion, which comprises:

an anchor portion disposed along an anchor surface formed at the concave and convex fitting portion;

an upper opposite portion connected to an upper end of the anchor portion;

a lower opposite portion connected to a lower end of the anchor portion; whereby the anchor portion, the upper opposite portion and the lower opposite portion form a U-shaped side view tracing the concave and convex fitting portion, the lower opposite portion is formed as a plate spring portion which urges the friction pad in the radial direction of the rotor;

wherein the plate spring portion comprises:

an arc portion which is formed while bent so as to contact with the lower area of the anchor surface but not so as to contact with a lower surface of the concavity;

an extended portion formed by extending the arc portion in the obliquely upward direction; and

an upper contact portion formed in the top end of the extended portion so as to contact with a lower surface of the convexity.

5,699,883

SPRING-APPLIED DUAL COIL BRAKE

James W. Albrecht, Dayton, Ohio, assignor to Stromag, Inc., Dayton, Ohio

Filed Dec. 12, 1996, Ser. No. 764,041

Int. Cl.[6] H02K *49/00*; B60T *13/04*

U.S. Cl. 188—171 14 Claims

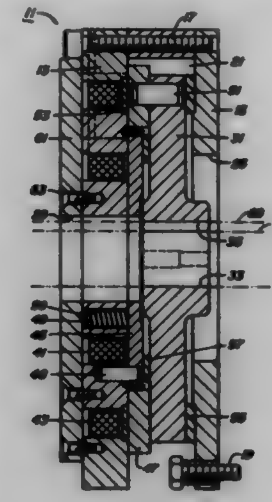

1. An electric brake assembly, comprising in combination:

a stationary housing;

a rotary shaft having an axis;

a brake rotor mounted on the rotary shaft for rotation therewith;

a static brake armature secured to the housing to prevent rotation therebetween, the static brake armature being free to move axially relative to the housing and the rotor;

a spring between the housing and the static brake armature for urging the static brake armature away from the housing and against the rotor to frictionally engage the rotor and prevent rotation of the rotor relative to the housing;

a dynamic brake armature secured to the rotor for rotation therewith, the dynamic brake armature being free to move axially relative to the rotor and the housing;

an electromagnetic first coil stationarily mounted to the housing for drawing the dynamic brake armature frictionally against the housing when energized to apply a braking force to the rotor;

an electromagnetic second coil stationarily mounted to the housing for urging the static brake armature toward the housing when energized to compress the spring and pull the static brake armature away from the rotor; and

means for selectively energizing the first coil and the second coil for providing a dynamic braking force when the first coil is energized, an absence of braking force when the first coil is de-energized and the second coil is energized, and a parking brake force when both of the coils are de-energized.

5,699,884

AUTOMATIC PLAY COMPENSATION IN CABLE OPERATED BRAKES ESPECIALLY OF MOTOR VEHICLES

Norbert Koch, Esslingen; Kurt Böhm, Denkendorf; Nikolaus Schefcsik, Schwaikheim, and Jürgen Eipper, Kernen, all of Germany, assignors to Mercedes-Benz AG, Stuttgart, Germany

Filed Sep. 5, 1996, Ser. No. 708,458

Claims priority, application Germany, Sep. 16, 1995, 195 34 430.3

Int. Cl.[6] B60T *11/04*

U.S. Cl. 188—196 B 8 Claims

1. An automatic play compensation arrangement for cable-operated vehicle parking brakes, including a brake operating element and a cable extending between said brake operating element

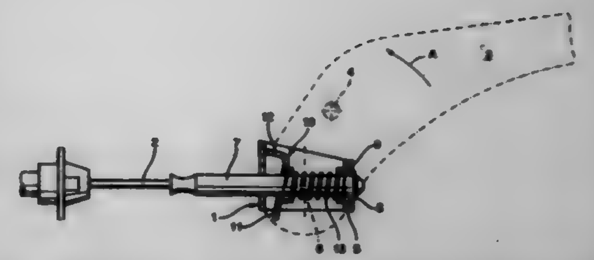

and a vehicle brake for actuating said vehicle brake, said arrangement comprising a support bracket mounted for movement with said brake operating element, a spring-loaded clamping lever supported in said support bracket, said cable having an end extending through said support bracket and being slidably supported therein and said cable end also extending through said clamping lever and being firmly engaged by said clamping lever when said brake operating element is actuated and spring means for tensioning said cable when said brake operating element is in a brake releasing rest position.

5,699,885

VIBRATION DAMPER WITH ADJUSTABLE DAMPING FORCE

Andreas Förster, Schweinfurt, Germany, assignor to Fichtel & Sachs AG, Schweinfurt, Germany

Continuation-in-part of Ser. No. 214,615, Mar. 17, 1994, Pat. No. 5,551,541. This application Jul. 6, 1995, Ser. No. 499,065

Claims priority, application Germany, Mar. 18, 1993, 43 08 683.9; Feb. 26, 1994, 44 06 373.5; Mar. 3, 1994, 44 06 918.9; Jul. 7, 1994, 44 23 526.7

Int. Cl.[6] F16F *9/34*

U.S. Cl. 188—317 18 Claims

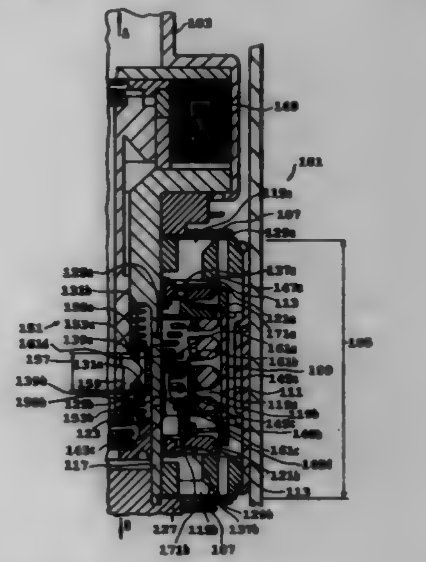

1. A shock absorber comprising:

a cylinder defining a chamber therein, said cylinder containing a damping fluid;

a piston rod sealingly projecting into said cylinder and being axially displaceable with respect to said cylinder;

a piston being attached to said piston rod, said piston being slidably disposed within said cylinder to sealingly divide said cylinder into first and second chambers;

means for permitting fluid communication between said first and second chambers;

said means for permitting fluid communication being disposed in at least a portion of said piston, said means for permitting fluid communication comprising:

a first spring-loaded main stage valve body;

a second spring-loaded main stage valve body;

a control chamber being defined between said first main stage valve body and said second main stage valve body;
first inlet means for directing fluid from said first chamber to said control chamber through said first main stage valve body upon axial displacement of said piston in a first direction;
second inlet means for directing fluid from said second chamber to said control chamber through said second main stage valve body upon axial displacement of said piston in a second direction, the second direction being opposite the first direction;
means for permitting axial displacement of:
said first main stage valve body towards said second main stage valve body during flow of damping fluid through said first inlet means; and
said second main stage valve body towards said first main stage valve body during flow of damping fluid through said second inlet means;
said first chamber being disposed adjacent said piston rod;
said second chamber being disposed further away from said piston rod than is said first chamber;
said means for permitting fluid communication between said first and second chambers comprising:
means for dividing the damping medium into a main flow and a side flow;
a damping valve device, said damping valve device comprising:
a damping valve body and first and second main stage valves;
said first main stage valve comprising said first main stage valve body;
said second main stage valve comprising said second main stage valve body; and
a pilot stage valve configured for activating said first and second main stage valves, said pilot stage valve comprising said means for permitting axial displacement of said first main stage valve body and said second main stage valve body;
outlet means for directing damping fluid between said control chamber and said first and second chambers; and
actuator means for adjustably controlling the flow of damping fluid through said outlet means.

5,699,886

LUGGAGE HAVING SUPPLEMENTARY TOW HANDLE FOR WHEELED LUGGAGE AND METHOD OF TOWING COMBINATION OF SAME

Ricky J. Latshaw, Republic, Mo., assignor to Purdy Neat Things Co., Inc., Republic, Mo.

Filed Nov. 13, 1995, Ser. No. 556,968

Int. Cl.⁶ A45C *13/26*

U.S. Cl. 190—108 **31 Claims**

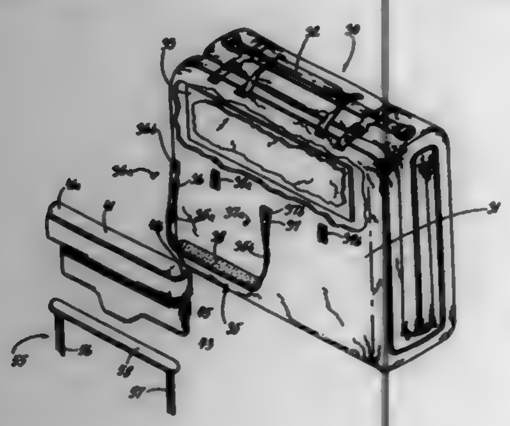

17. A piece of luggage comprising;
a body;
a handle retainer connected to said body of the piece of luggage for retaining at least portions of a tow handle of an additional piece of wheeled luggage when the piece of luggage overlies upper portions of an additional piece of wheeled luggage; and
a supplementary handle having means connected to said body for towing the combination of the piece of luggage and an additional piece of wheeled luggage.

28. A method for towing a combination of a piece of luggage and an additional piece of wheeled luggage by a user, the method comprising:
retaining at least portions of a handle of a first piece of wheeled luggage with a handle retainer connected to a second piece of luggage positioned to overlie upper portions of the first piece of wheeled luggage; and
towing a combination of the first and second pieces of luggage by a hand of a user only by a supplementary tow handle connected to the second piece of luggage.

5,699,887

HYDROKINETIC TORQUE CONVERTER WITH AN IMPELLER CLUTCH AND A BRIDGE COUPLING

Wolfgang Kundermann, Schweinfurt, Germany, assignor to Fichtel & Sachs AG, Schweinfurt, Germany

Filed Mar. 11, 1996, Ser. No. 613,466

Claims priority, application Germany, Mar. 10, 1995, 195 08 613.9

Int. Cl.⁶ F16H *61/62;45/02*

U.S. Cl. 192—3.26 **32 Claims**

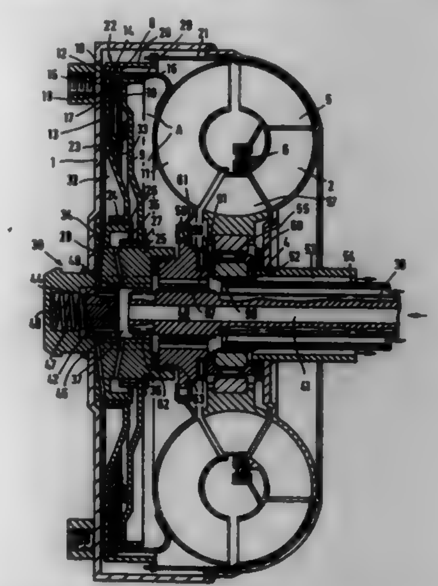

1. A hydrokinetic torque converter comprising: a converter housing (1); a first impeller (2) driven by an internal combustion engine, a second impeller (5), a turbine (11), and a stator (57) together forming a converter toms circuit filled with hydraulic fluid; an impeller clutch (22) comprising a clutch member (13) for placing said second impeller into non-rotatable drive connection with said first impeller; a first and second hydraulic line connected to a supply system; a first chamber (32) and a second chamber (33) within said converter housing (1) and separated by said clutch member (13); at least one fluid passage (34, 35) connecting a respective one of said chambers with a respective one of said hydraulic lines; means connected to at least one of said hydraulic lines for creating a pressure gradient between said first and second chambers for moving said clutch member (13) into a first position in which said clutch member is connected to said converter housing for rotation therewith and a second position in which said clutch member and said converter housing are disconnected from each other;
a component (30) including a housing hub (28) connected to said converter housing (1); a control plunger (42) disposed within said housing hub (28) in fluid communication with said hydraulic lines and said first and second chambers (32, 33); said control plunger (42) comprising at least one fluid flow passage (44, 45) and being mounted so as to move out of a first rest position into a second fluid connection position with said first hydraulic line in which the hydraulic fluid flows through said fluid flow passage in a direction and said second hydraulic line in which the hydraulic fluid flows in an opposite direction.

5,699,888

MODULATING CLUTCH HAVING PASSIVE TORQUE THROUGHOUT THRESHOLD

Dan J. Showalter, Plymouth, Mich., assignor to Borg-Warner Automotive, Inc., Sterling Heights, Mich.

Filed Mar. 6, 1996, Ser. No. 612,616

Int. Cl.⁶ F16D *13/04;23/00;41/00;43/00*

U.S. Cl. 192—35 **16 Claims**

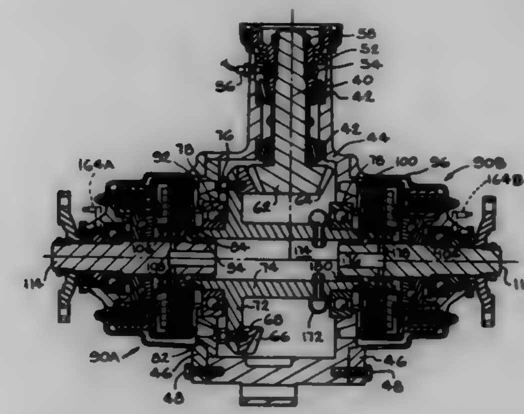

1. A clutch for use in a differential or transfer case of a four-wheel drive vehicle comprising, in combination,
an input member,
an output member,
a modulating clutch assembly disposed between said
input member and said output member, said modulating clutch having
a first plurality of clutch discs disposed for rotation with said input member,
a second plurality of clutch discs interleaved with said first plurality of clutch discs and disposed for rotation with said output member,
a clutch operator for adjustably compressing said first and said second pluralities of clutch discs, said clutch operator having an assembly including a pair of opposed members defining a plurality of ramped recesses, a like plurality of load transferring members disposed in a respective one of said recesses and an electromagnetic coil for retarding rotation of one of said opposed members, and
means for compressing said first and said second pluralities of clutch discs to provide a predetermined level of frictional coupling between said input member and said output member.

5,699,889

ONE WAY DRIVE DEVICE WITH A DOG CLUTCH TO TRANSMIT TORQUE AND A RATCHET CLUTCH TO PROVIDE AN OVERRUN FUNCTION

Craig T. Gadd, Solana Beach, Calif., assignor to Epilogics, LP, Los Gatos, Calif.

Filed Apr. 16, 1996, Ser. No. 633,033

Int. Cl.⁶ F16D *11/14;19/00;41/12;43/20*

U.S. Cl. 192—35 **26 Claims**

12. A one way drive device comprising:

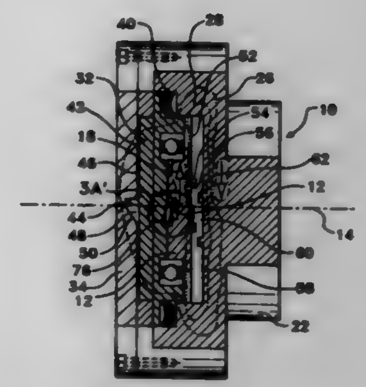

a) a drive member mounted for rotation about a given axis either in a clockwise overrunning direction or a counterclockwise torque transmitting direction in response to a rotational input;
b) a driven member mounted for rotation about said given axis, at least in the counterclockwise torque transmitting direction, said drive member and said driven member being mounted for limited axial movement relative to one another along said given axis between a disengaged position in which said drive member is allowed to rotate freely relative to said driven member and an engaged position in which said drive member directly engages said driven member rotationally coupling said drive member to said driven member;
c) coupling means including a coupling member separate from but positioned adjacent to said drive member and said driven member, said coupling member being mounted to said driven member for movement relative to said driven member between a first position for allowing said drive member to rotate freely in the clockwise overrun direction relative to said driven member and a second position for rotationally engaging said drive member to said driven member when said drive member is driven by said rotational input in said torque transmitting counterclockwise direction thereby causing said driven member to rotate in the counterclockwise direction with said drive member, said coupling member being configured to move from its first position to its second position in response to and as a result of initial rotational movement of said drive member in said torque transmitting counterclockwise direction relative to said driven member; and
d) housing means connected to said driven member and extending from said driven member around the outer periphery of said drive member and said coupling means forming a housing around said drive member and said coupling means.

5,699,890

SYSTEM FOR MAINTAINING CLUTCH PEDAL HEIGHT AFTER CLUTCH RESURFACING

Roger Swenson, Sr., Rte. 2, Williamsville, Mo. 63935

Filed Jan. 26, 1996, Ser. No. 592,717

Int. Cl.⁶ F16D *13/58*

U.S. Cl. 192—110 R **5 Claims**

1. In a internal combustion engine transmission system having an engine crankshaft, clutch, a metal flywheel connecting the engine to a drive gear box, a coupling arbor having a planar face and a complementary planar face on said flywheel, and a plurality of bolts securing said flywheel to said arbor with said planar faces abutting each other, said flywheel having a metal clutch surface which has been resurfaced by machining to remove metal from said clutch surface and extend the life of said flywheel, shim means for establishing substantially the same position of said clutch surface after machining as when the clutch surface was new, said shim means comprising a planar annular plate having a pair of parallel surfaces spaced apart by the thickness (T) of the planar annular plate member, said thickness (T) being substantially the amount of metal removed during the machining of said surface, said annular plate member having a plurality of bolt holes, one for each of said bolts to pass therethrough, respectively, one of said

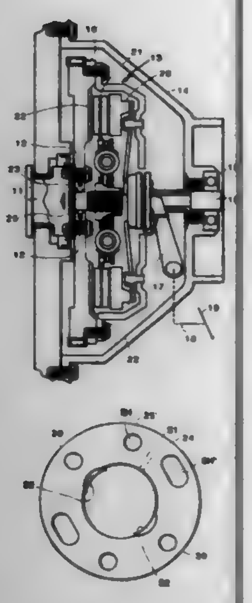

pair of parallel surfaces being adapted to abut said planar face on said arbor and the other of said parallel surfaces being adapted to abut said complementary planar face on said flywheel, the improvement wherein said annular plate has an inner aperture, a plurality of breakaway tabs on said inner aperture which are adapted to be broken away to accommodate larger diameter crankshaft hubs.

5,699,891

DEVICE FOR DISPLACING WORKPIECE CARRIERS

Gerhard Goedowski, Bietigheim-Bissingen; Werner Arleth, Esslingen, and Peter Ulmer, Urbach, all of Germany, assignors to Robert Bosch GmbH, Stuttgart, Germany

Filed Jan. 3, 1996, Ser. No. 582,252

Claims priority, application Germany, Jan. 4, 1995, 195 00 148.6

Int. Cl.⁶ B65G *37/00*

U.S. Cl. 198—370.1 **12 Claims**

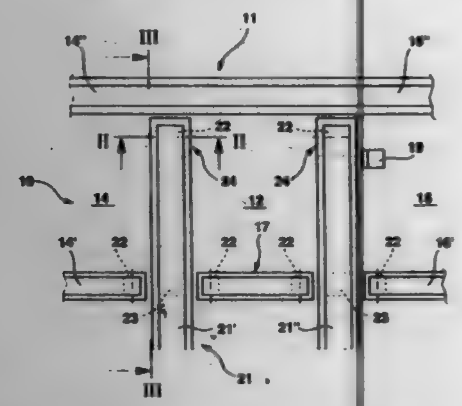

1. Apparatus for displacing workpiece carriers from one conveying path to a further conveying path, the apparatus having a lifting device for the workpiece carrier arranged in a transfer zone with which the workpiece carrier can be transferred from the feeding conveyor path to the further conveyor path; the further conveyor path having at least one transport belt, which the lifting device can lift and lower from a first plane to a second plane, so that a pulling run of the at least one transport belt can serve as a support for the workpiece carrier; and said further conveyor path, having at the end of a transport section and within said transfer zone, at least one lifting-deflecting device for deflecting the respective at least one transport belt, which lifting-deflecting device can lift and lower the at least one transport belt from the first plane to the second plane substantially by the same amount as the lifting device for the same transport belt.

5,699,892

CHAIN TYPE TRANSFER DEVICE

Duen-Jyh Shyr, Tainian, and Kuan-Chou Chen, Hsin-Ying, both of Taiwan, assignors to Industrial Technology Research Institute, Hsinchu, Taiwan

Filed Jul. 18, 1996, Ser. No. 683,468

Int. Cl.⁶ B65G *47/46*

U.S. Cl. 198—370.09 **7 Claims**

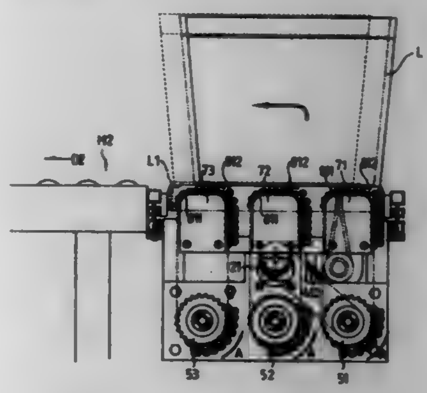

1. A chain type transfer device adapted to be mounted in a converging/branching point of a roller conveyor having a plurality of spaced and parallel rollers, comprising:

two supporting plates, disposed upright to be spaced from and parallel to each other;

a power motor, having a driving spindle and disposed between the two supporting plates;

at least two rotating shafts, each having two ends and disposed between the two supporting plates to be spaced from and parallel to each other, each two adjacent rotating shafts being driven synchronously with driving means and one of the rotating shafts being driven by the power motor;

a plurality of driving sprockets secured to the two ends of each of the rotating shafts;

a plurality of composite chains, each formed by combining a regular chain with a roller chain having outer side free rollers to provide an endless configuration, and each extending between the respective guiding plate and the sprocket to be driven by the sprocket to slide over the rail and defining a first height of a top edge thereof relative to the rail; the free rollers being pivoted to an outer side of the roller chain and extending over a length of the composite chain and defining a second height of a top edge thereof relative to the rails; said second height being greater than the first height;

wherein each of the composite chains extends parallel with and is located between two adjacent rollers of a roller conveyor to have the first height of the composite chain lower than a top edge of the rollers and the second height of the composite chain higher than a top edge of the rollers;

with the motor driving the rotating shafts to drive the sprockets for moving the composite chains, the free rollers of the composite chains being moved onto the rails between the two adjacent rollers and positioned higher than the top edge of the rollers so that the free rollers raise a conveyed article to separate it from the rollers, and so that the free rollers receive and move a conveyed article which is originally loaded on a branch conveyor and located at a height substantially the same as the second height of the free rollers and to lower it onto the rollers.

5,699,893

ANGULAR CONVEYOR FOR FRAGILE CYLINDRICAL OBJECTS, IN CIGARETTE PACKING MACHINES

Valter Spada, Marzabotto, Italy, assignor to SASIB S.p.A., Bologna, Italy

Filed Feb. 14, 1996, Ser. No. 601,518

Claims priority, application Italy, Feb. 15, 1995, GE95A0014

Int. Cl.⁶ B65G *29/00*

U.S. Cl. 198—478.1 **17 Claims**

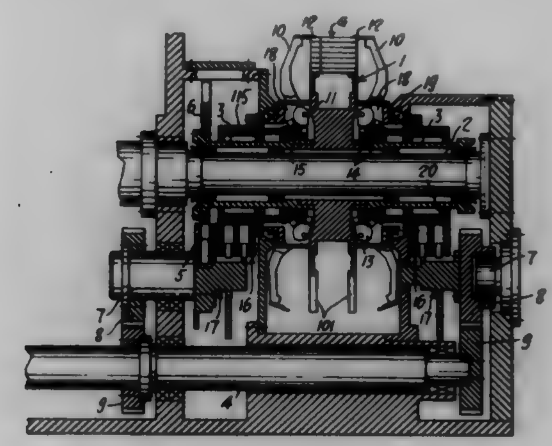

1. Angular conveyor for fragile cylindrical objects in cigarette packing machines, comprising:

a wheel supported so that it can rotate about its axis and provided with at least, one and preferably a plurality of peripheral cells to house cigarettes, these cells being open at least at a perimeter of the wheel;

means driving the wheel by steps of rotation, in such a way that the cells are brought in succession to predetermined stations having specified angular positions;

means to at least partially close the open perimetrical ends of the cells, which consist of pairs of fingers interacting with partial sections of two axial ends of the said open perimetrical ends of the cells, and which are movable alternately between a position of at least partial closure and one of opening of the said ends in synchronization with the steps of advance of the wheel;

finger-carrying elements mounted so that they oscillate in accordance with the alternating motion of the fingers, rotate integrally with the wheel on opposite sides of the wheel, and being driven by annular cams which are substantially coaxial with the wheel, these cams being provided on both sides of the wheel and rotating integrally with each other, but independently of the rotary motion of the wheel, and interacting with cam follower coupling means associated with the finger-carrying elements of corresponding sides of the wheel;

tracks mounted on the cams and having configurations which are substantially symmetrically identical to each other and are formed such that they cause the opening and closing of the cells one or more times; or cause the cells to be kept in the said open and closed condition during their movement along a predetermined arc of the angular path; and/or cause the opening and closing of the cells during their stationary phase in at least one and preferably in at least two different predetermined angular positions of the cells, by means of a relative angular movement of the wheel with respect to the cams, characterized in that the cams are formed as three-dimensional cams.

5,699,894

CABLE DRIVEN CONVEYOR SYSTEM

Michael J. Bestgen, Green River; Richard B. Kramer, Rock Springs; Daniel P. Moulden, Superior, all of Wyo.; Chris Barbee, Centralia, Wash., and Bryon Hibbetts, Fioria, Ariz., assignors to FMC Corporation, Chicago, Ill.

Filed Oct. 6, 1995, Ser. No. 539,895

Int. Cl.⁶ B65G *17/20*

U.S. Cl. 198—678.1 **26 Claims**

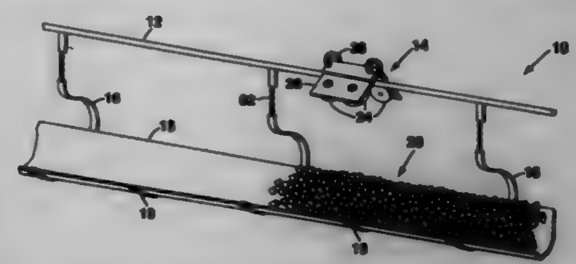

2. A conveyor system for transporting material comprising:

a cable;

at least one hanger connected to said cable;

a conveyor belt disposed on said hanger;

an idler assembly, said idler assembly comprising an idler bracket having a first side and a second side and an angle between said first and second side, said idler bracket forming a v-shape, said idler assembly further comprising a first idler wheel connected to said first side of said idler bracket and a second idler wheel connected to said second side of said idler bracket, said first and second idler wheels forming a pair of idler wheels and being arranged in an angular relation forming a cradling region;

a cable connecting assembly for connecting said cable to said hanger; and

a chain disposed between said hanger and said cable connecting assembly wherein said cable connecting assembly comprises a spring steel strap and a bracket, said spring steel strap being fastened to one end of said bracket, and an opposing end of said spring steel strap being connected to said chain, said spring steel strap being wrapped around said cable and wherein said cradling region supports said cable and wherein said first idler wheel is generally parallel to said first side of said idler bracket and said second idler wheel is generally parallel to said second side of said idler bracket.

5,699,895

SCRAPER FOR CHAIN BANDS OF DOUBLE-ENTER CHAIN SCRAPER CONVEYORS, ESPECIALLY IN UNDERGROUND MINING

Kurt AndréMaterne, Iserlohn; Guenther Philipp, Schwerte, and Wilhelm Muelle, Froendenberg, all of Germany, assignors to Thiele GmbH & Co. KG, Iserlohn, Germany

Filed Mar. 4, 1996, Ser. No. 610,702

Claims priority, application Germany, Mar. 25, 1995, 195 11 043.9

Int. Cl.⁶ B65G *19/24*

U.S. Cl. 198—731 **11 Claims**

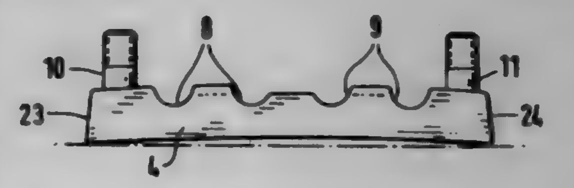

1. A scraper for chain bands of double-center chain scraper conveyors, comprising a solid one-part scraper body formed to engage from above horizontal round chain links of the double-center chain which chain links are located next to one another; a

chain shackle formed to hold the chain links from below and extending in a scraper longitudinal axis, said scraper body and said chain shackle being provided, on both sides of a horizontal parting plane, with chain beds for receiving legs of the horizontal chain links, said chain shackle being connected to said scraper body perpendicularly to the horizontal parting plane and transversely to a direction of run; means for connecting said chain shackle to said scraper body, said chain shackle being curved convexly relative to the scraper longitudinal axis transversely to the chains so that during mounting with inserted double-center chain, said chain shackle first comes to bear on the two legs of the horizontal chain links located toward a center of the scraper, so that when a defined mounting force has been achieved, said chain shackle additionally clamps the chain links with approximately the same force.

5,699,896

TRANSFER DEVICE, AND IN PARTICULAR, A PACKAGING MACHINE FOR CIGARETTES OR THE LIKE, WHICH IS PROVIDED WITH THE SAID TRANSFER DEVICES

Walter Spada, Marzabotto, and Orazio Di Camillo, Ferrara, both of Italy, assignors to SASIB S.p.A., Bologna, Italy

Filed May 4, 1995, Ser. No. 434,914

Claims priority, application Italy, May 11, 1994, GE94A0057

Int. Cl.⁶ B65G *25/04*

U.S. Cl. 198—747 **15 Claims**

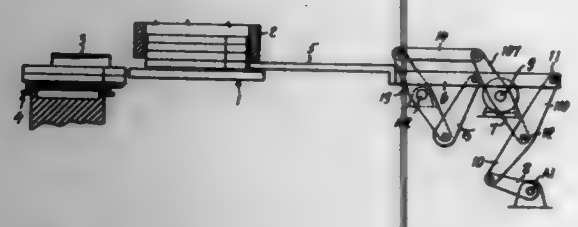

1. A transfer device comprising:

a transfer tool;

a drive element which moves in an angular motion about a stationary drive axis;

an articulated oscillating linkage which guides said tool from a rear position in a rectilinear trajectory to a front position and back to the rear position, and which is activated by said drive element to cause said tool to move in the guided rectilinear trajectory and back, said oscillating linkage including:

(a) a drive arm having an oscillating drive end and a drive attachment point remote from said drive end at which said drive arm is attached to said drive element such that said drive end of said drive arm is driven in rotation about the drive axis by movement of said drive element, and said drive arm including a drive line extending from said drive attachment point and through said drive end,

(b) a driven arm having an oscillating driven end and a driven attachment point remote from said driven end at which said driven end is mounted for rotation about a stationary driven axis passing through said driven attachment point, said driven axis being parallel to said drive axis, and said driven arm including a driven line extending from said driven attachment point and through said driven end, and

(c) an intermediate coupling arm having

a coupling end attached to said driven end of said driven arm,

a tool attachment end remote from said coupling end attached to said tool, and

an intermediate portion located between said coupling end and said tool attachment end, said intermediate portion including an intermediate point of attachment to said drive end of said drive arm so that said coupling arm connects said drive end of said drive arm to said driven end of said driven arm,

whereby said tool attachment end and hence said tool moves in the guided rectilinear trajectory when said drive end of said drive arm is rotated by said drive element; and

wherein, with said drive and driven lines projected onto a common plane perpendicular to said drive axis, (a) when said tool is in the front position, said drive line and said driven line are one of convergent or divergent to one another, and (b) when said tool is in the rear position, said drive line and said driven line are the other one of convergent or divergent to one another.

5,699,897

DRIVE MECHANISM FOR A LINEAR MOTION CONVEYOR

Paul Svejkovsky, 15714 Firthridge Ct., Webster, Tex. 77598

Continuation of Ser. No. 273,812, Jul. 12, 1994, abandoned, which is a continuation-in-part of Ser. No. 217,207, Mar. 29, 1994, Pat. No. 5,351,807. This application Sep. 30, 1996, Ser. No. 723,283

Int. Cl.⁶ B65G *25/00*

U.S. Cl. 198—750.8 **23 Claims**

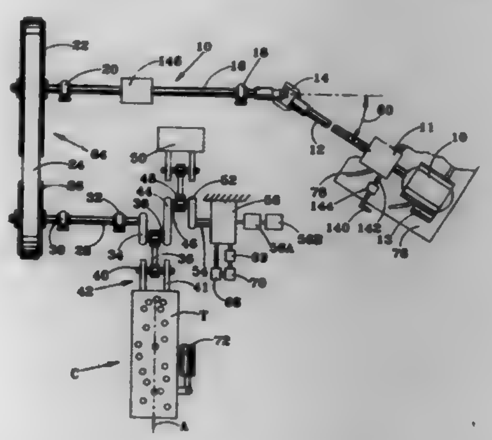

1. A drive mechanism for powering a linear motion conveyor, the linear motion conveyor including a tray movable in a forward direction at a slow speed, then in a backward direction at a fast speed to move goods along the tray, the drive mechanism comprising:

a drive motor including a motor shaft with a motor shaft axis, the motor shaft having a substantially constant rotational output;

a variable speed mechanism powered by the motor shaft and driving a driven shaft, such that the rotational speed of the driven shaft varies sequentially during one-half rotation of the driven shaft compared to a subsequent one-half rotation of the driven shaft;

a crank interconnected between the driven shaft and the tray, such that the tray moves forward during the one-half rotation of the driven shaft, then backward during a subsequent one-half rotation of the driven shaft, thereby moving goods along the tray; and

a dampening device for applying a continual dampening force during deceleration of the tray.

5,699,898

APPARATUS FOR ADJUSTING ONE OF THE BEARING BLOCKS OF A ROLLER

Klaus Bartelmuss, and Heinz Bartelmuss, both of Teufenbach Nr. 63, A-8833 Teufenbach, Austria

Filed Feb. 22, 1996, Ser. No. 605,760

Claims priority, application Austria, Mar. 23, 1995, 520/95

Int. Cl.⁶ B65G *39/16*

U.S. Cl. 198—806 **15 Claims**

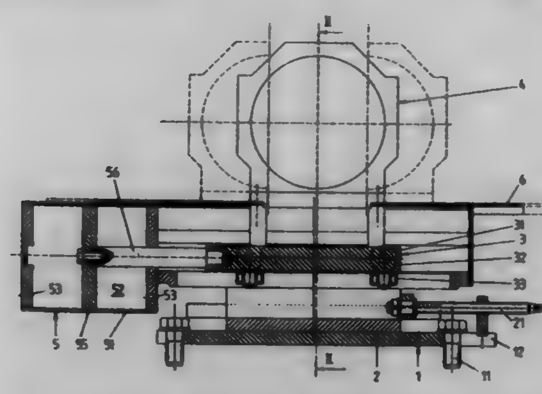

1. An apparatus for adjusting a bearing block of a rotating roller supporting a belt traveling in a given direction of motion, comprising:

a final control element supporting a bearing block of a roller, the final control element being a carriage supported in a support frame and being movable relative to the support frame in the given direction of motion of the belt, for adjusting an angular orientation of the roller relative to the belt;

an adjusting device for moving said carriage relative to the support frame; and

a sliding carriage disposed in and being adjustable relative to the support frame in the direction of motion of the belt, and a second adjusting device for moving said sliding carriage, said carriage being adjustably supported in said sliding carriage in the given direction of motion of the belt.

5,699,899

ELECTROMECHANICAL COMPONENT, IN PARTICULAR A RELAY, HAVING A SEALED CASING

Lutz Kahlbau, Berlin, Germany, assignor to Siemens Aktiengesellschaft, Munich, Germany

PCT No. PCT/DE94/01289, § 371 Date Feb. 26, 1996, § 102(e) Date Feb. 26, 1996, PCT Pub. No. WO95/12890, PCT Pub. Date May 11, 1995

PCT Filed Nov. 2, 1994, Ser. No. 602,811

Claims priority, application Germany, Nov. 3, 1993, 43 37 505.7

Int. Cl.⁶ H01H *9/04*

U.S. Cl. 200—302.1 **5 Claims**

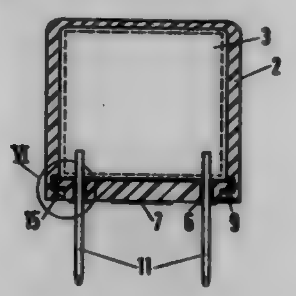

1. An electromechanical component, comprising:

a casing which is formed from a base and a cap, the base having apertures in which connecting elements are anchored and sealed by insertion;

the base, which is composed of a dimensionally stable plastic, being coated, at least in wall regions of the apertures, with a layer of a thermoplastic elastomer;

the connecting elements having a cross section, which is larger than a remaining width of respective apertures such that said connecting elements are anchored in a sealed manner by insertion of a respective connecting element into a respective aperture with a press fit;

one of the base and the cap being provided with a layer of elastomer in a region of an edge gap between the base and the cap;

the base forming a circumferential sealing edge which is coated with an elastomer layer having a U-shaped profile and which engages in a circumferential groove in the cap.

5,699,900

CONTACT LENS CASE WITH AUTOMATIC COUNTER

Derrick L. Artis, 252 Gallatin St., N.W., Washington, D.C. 20011

Filed Jul. 29, 1996, Ser. No. 688,269

Int. Cl.⁶ A45C *11/04*

U.S. Cl. 206—5.1 **10 Claims**

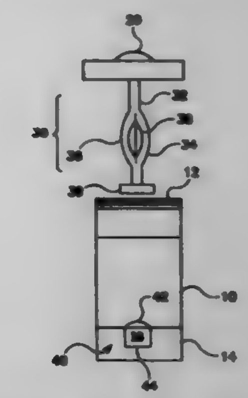

1. A device for storing contact lenses and for tracking a number of uses of contact lenses comprising:

a housing having an open end and a closed end;

a cover removably attached to the open end of said housing, the cover forming a substantially liquid tight seal with the open end of said housing;

a contact lens retaining member coupled to said cover, said contact lens retaining member including a support having a lens holder disposed at a first end and being coupled to said cover at a second end, and said contact lens retaining member including a base coupled to the lens holder; and

a counter that engages said contact lens retaining member when said cover is attached to the open end of said housing and that disengages said contact lens retaining member when said cover is removed from said housing, thereby automatically counting a number of times said cover is removed from and attached to said housing, said counter including a button disposed on the closed end of said housing, the button being positioned to engage the base of said contact lens retaining member.

5,699,901

JEWELRY DISTRIBUTION AND DISPLAY

Richard M. Cohen, Foxboro, Mass., assignor to Swarovski Jewelry U.S. Limited, Cranston, R.I.

Filed Mar. 26, 1996, Ser. No. 623,851

Int. Cl.⁶ B65D *73/00*

U.S. Cl. 206—6.1 **13 Claims**

1. An apparatus for the distribution and display of jewelry and similar articles comprising in combination:

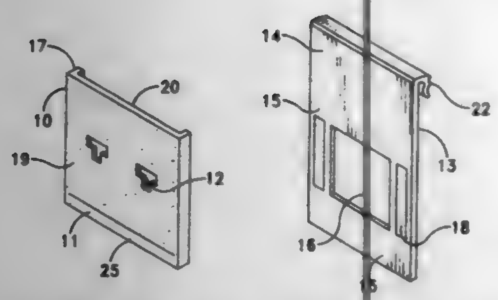

a. a generally planar rectangular slug having a slug face with a slug indicia display area, a slug back with an attachment area, a slug bottom, a slug top, and jewelry attachment means;
b. a generally planar rectangular slug holder larger than the slug and having a slug holder face with a slug holder indicia display area and a slug holder attachment area, a slug holder back, opposing side edges, a slug holder bottom, a slug holder top, and a product back projection area;
c. means for aligning the slug with the slug holder comprising a flange located on each of the opposing side edges projecting away from and approximately perpendicular to the slug back a distance approximately equal to the thickness of the slug holder, and a substantially flat work surface on which the slug bottom and slug holder bottom can be aligned; and
d. one or more tape strips located between the slug holder face and the slug back for attaching the slug to the slug holder.

5,699,902
FOAM IN BAG PACKAGING SYSTEM
Laurence Burst Sperry, 121 Brayton Rd., Boston, Mass. 02135, and Anthony Orkin Davlin, 70 Mt. Vernon St., Boston, Mass. 02108
Filed Apr. 3, 1996, Ser. No. 626,981
Int. Cl.[6] B65D *81/03*
U.S. Cl. 206—219 52 Claims

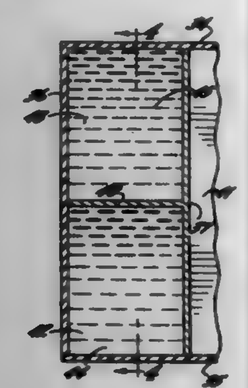

1. A foam in place packaging system comprising:
a bag formed of two sheets of flexible plastic film material closed on all four side edges;
a frangible seal that defines separate interior cells in said bag, to thereby define a single cell bag when said frangible seal is broken;
a first foam precursor composition in one of said interior cells;
a second foam precursor composition in another of said interior cells; and
means for permitting gases to vent from said bag as the foam precursor form foam, while preventing foam or foam precursors from escaping;
whereby when said frangible seal is entirely broken said separate cells thereby form a single interior cell in which said first and second foam precursors can mix thoroughly and react entirely to eliminate precursor residue and permit the resulting foam to expand properly and flow freely within the resulting single interior cell of said bag.

5,699,903
PACK, NAMELY HINGE-LID PACK
Heinz Focke, Verden, and Henry Buse, Visselhövede, both of Germany, assignors to Focke & Co. (GmbH & Co.), Verden, Germany
Continuation of Ser. No. 224,535, Apr. 7, 1994, Pat. No. 5,513,748. This application Mar. 12, 1996, Ser. No. 614,273
Claims priority, application Germany, Apr. 8, 1993, 43 11 563.2
Int. Cl.[6] B65D *85/10*
U.S. Cl. 206—268 27 Claims

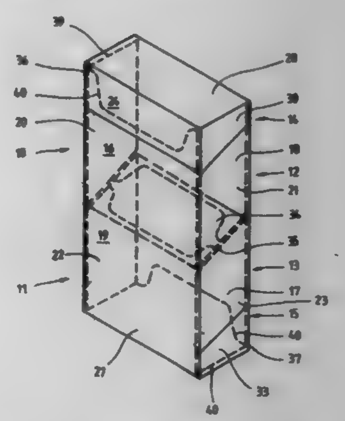

1. A hinge-lid pack assembly made from thin cardboard, and comprising a double pack made of a one-piece common blank,
wherein said the double pack has two opposite ends, and comprises:
a pack part (12, 13) having two mutually opposite narrow pack side walls (20 to 23), two large pack walls (16 to 19), and two end walls, the two large pack walls (16 to 19) forming a front wall and a rear wall of the double pack; and
first and second hinged lids (14, 15) on the opposite ends, respectively, of the double pack;
wherein said lids (14, 15) have two respective lid top walls (28, 29) which form said end walls of the double pack, two respective lid rear walls (26, 27), two respective lid front walls (24, 25), and respective pairs of lid side walls (30, 32 or 31, 33),
wherein said two large pack walls (16 to 19) are connected in one piece via a common first side wall strip (43) to form one of the narrow pack side walls (22 to 23), and
wherein the lid front walls (24, 25) are separated from respectively adjacent ones of the large pack walls by respective punching cuts (52, 53).

5,699,904
CASE FOR STORING BAND-SHAPED PERSONAL ORNAMENT
Shigeki Ikemoto, Higashiosaka, Japan, assignor to Ikemoto Brush Industry Co., Ltd., Higashiosaka, Japan
Filed Apr. 5, 1996, Ser. No. 628,265
Int. Cl.[6] B65D *85/18*
U.S. Cl. 206—296 10 Claims

1. A case for storing a band-shaped personal ornament said case comprising:
a case means body having a cylindrical configuration with an opening portion at a first end and a wall portion at a second end and having a circumferential wall possessing a slit window portion parallel to an axis of said case body and a cap which is detachable and freely rotates in a circumferential direction at said opening portion of said case body;
a bar, for winding said band-shaped personal ornament which approximately coincides with said axis of said case body, which is attached to an inner face of said cap;
a holding portion where an end portion of said bar for winding said band-shaped personal ornament is held and rotates freely

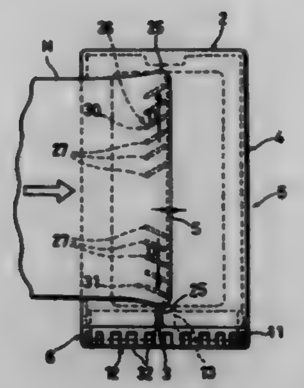

rotates at a central portion of an inner face of said wall portion of said case body; and
a guide portion having protrusions and depressions for spreading said band-shaped personal ornament toward a width direction of said band-shaped personal ornament, wherein said guide portion is formed near said slit window portion of said case body.

5,699,905
SHEET FOR HOLDING INFORMATION RECORDING CARRIERS
Hiroshi Hara, 2-1-216, Shinkawa 2-chome, Chuo-ku, Tokyo 104, Japan
PCT No. PCT/JP95/00046, § 371 Date Mar. 5, 1996, § 102(e) Date Mar. 5, 1996, PCT Pub. No. WO96/02441, PCT Pub. Date Jan. 2, 1996
PCT Filed Jan. 19, 1995, Ser. No. 600,994
Claims priority, application Japan, Jul. 15, 1994, 6-186498
Int. Cl.[6] B65D *85/57*
U.S. Cl. 206—308.1 13 Claims

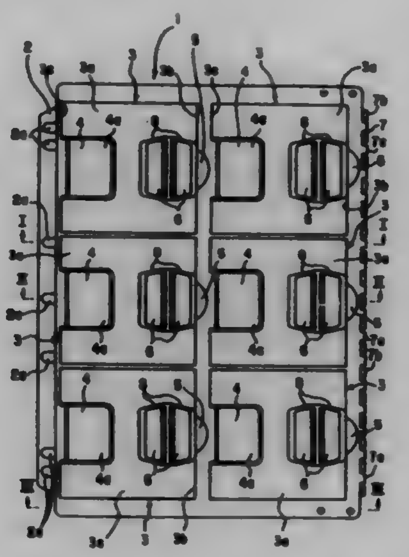

1. A sheet for holding information recording carriers comprising:
a binding margin formed on one side edge of said sheet, said binding margin having a plurality of binding holes;
a plurality of rectangular cavities for holding said information recording carriers, said rectangular cavities being formed in the surface of said sheet;
a plurality of pressing strips for holding said information recording carriers, each of said pressing strips extending from a side wall of a respective one of said rectangular cavities into an inner region of said respective one of said cavities;
at least one index strip removably formed in a bottom plate of each of said rectangular cavities; and
an insertion groove for mounting an index strip which has been removed from said bottom plate, said insertion groove being formed on a side edge opposite to that on which said binding margin is formed.

5,699,906
GOLF CLUB CARRIER
Carl Lombardo, P.O. Box 452, 70 St. John's Ave., Mt. Tabor, N.J. 07878, and Peter Lombardo, 42 Ferncliff Rd., Morris Plains, N.J. 07950
Filed Feb. 26, 1996, Ser. No. 607,142
Int. Cl.[6] A63B *55/00*
U.S. Cl. 206—315.3 7 Claims

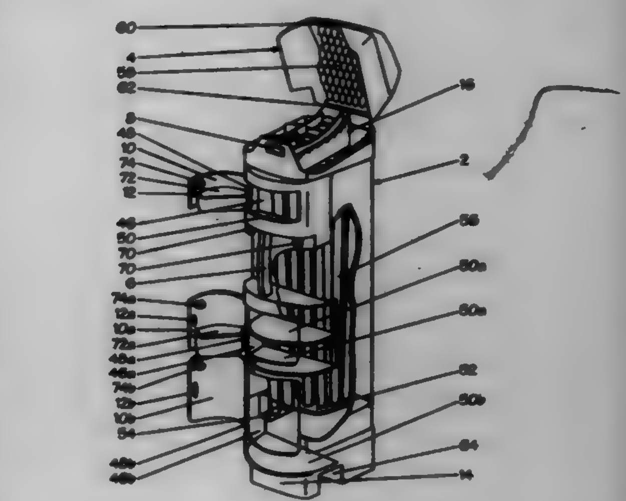

1. A golf club carrier specially designed for efficient use on a motorized golf cart and to satisfy a golfer's needs for protecting and efficiently using the clubs while golfing, as well as his needs for club security, and said carrier having a front side, a back side, and side members, comprising:
a closed integral bottom portion having an indentation in its undersurface to allow clearance of the bottom of the carrier over the rear bumper of a motorized golf cart when the carrier is installed thereon, said carrier also having rigid lower portion sides connected to the side members of the carrier, said side members being fixedly attached to an upper deck which houses individual spaces for golf clubs and which deck has a golf club position stabilizer affixed thereon;
a series of isolation tubes internally situated within the carrier which open at their top on said upper deck and extend in a relatively parallel direction to said integral bottom portion of the carrier;
a top cover attached on the back side of said carrier by means of a releasable hinge device and connected in the front to said carrier with a latch means such that said top is moveable between an open position adjacent to the back of said side members and a closed position covering said upper deck and said golf club position stabilizer; and
wherein the front side of the carrier has storage compartments and doors to provide easy access to the contents of the storage compartments when the carrier is installed over the rear bumper of a motorized golf cart, each of said doors being attached to said front side of the carrier by means of a vertically extending hinge device along one side and a latch means on the other side allowing said doors to rest in an open position for access or in a closed position for security, and each of said doors being further attached to a locking device that when set in the locked position restricts said doors from opening and when set to the open position allows access to said compartments.

5,699,907

PACK FOR KNIVES AND THE LIKE

Holger Langenstück, Ober-Mörlen, Germany, assignor to Beiersdorf Aktiengesellschaft, Hamburg, Germany

Continuation of Ser. No. 524,814, Sep. 7, 1995, abandoned.

This application Feb. 7, 1997, Ser. No. 796,315

Claims priority, application Germany, Sep. 12, 1994, 44 32 355.7

Int. Cl.⁶ B65D *73/00; 75/64*

U.S. Cl. 206—349 **6 Claims**

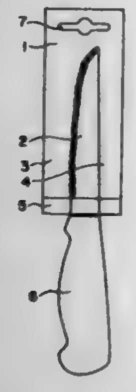

1. A pack for a knife, which knife comprises a blade and a handle, said pack comprising two layers of polypropylene film, each having a thickness of from about 40 μm to 160 μm, and which enclose the blade of the knife, but not the handle, between them, and each of which has a self-adhesive finish on the side facing the other layer, which adheres the layers to each other, as well as to the knife blade, but which remains on the film and not on the blade when the two layers of film are separated from each other and from the knife blade, said films further comprising opposing nonadhesive grip elements at one end of the film.

5,699,908

SCALPEL BLADE REMOVAL AND STORAGE APPARATUS

Lloyd H. Frye, Baton Rouge, La., and Clarence Zierhut, Garland, Tex., assignors to Fryco, Inc., Baton Rouge, La.

Filed Apr. 25, 1996, Ser. No. 638,978

Int. Cl.⁶ B65D *83/10*

U.S. Cl. 206—355 **10 Claims**

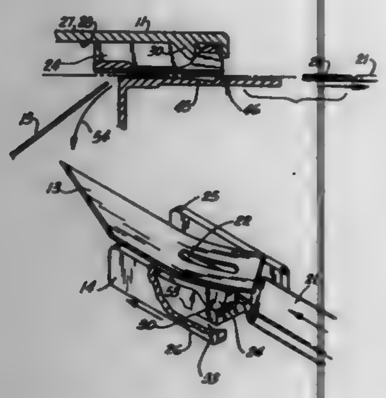

1. A scalpel blade removal apparatus for separating a changeable scalpel blade from a handle with a tang comprising:

a) a housing with an interior;

b) a receptacle on the housing with an opening for receiving the scalpel blade to be removed;

c) a moving cam member movably mounted in the receptacle between first and second positions;

d) a slot on the cam member that receives the tang of the handle;

e) a fixed cam surface on the housing that rotates the proximal end of the moving cam member as the moving cam member travels from the first to the second position;

f) spring means for urging the moving cam member from the second to the first position; and

g) a catch that retains the blade within the housing when the moving arm member is in the second position and the tang withdrawn from the receptacle.

5,699,909

SURGICAL INSTRUMENT PACKAGE

Brian W. Foster, Trumbull, Conn., assignor to United States Surgical Corporation, Norwalk, Conn.

Filed Aug. 7, 1996, Ser. No. 693,746

Int. Cl.⁶ B65D *85/20*

U.S. Cl. 206—370 **10 Claims**

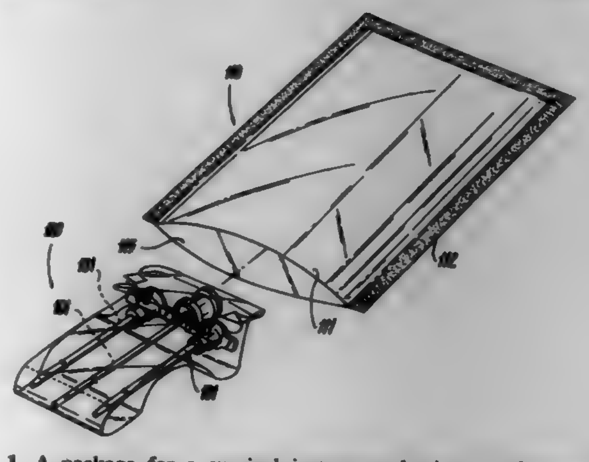

1. A package for a surgical instrument having an elongated endoscopic portion, which compromises:

a) an outer envelope;

b) a retainer member disposed within the outer envelope, the retainer member being a single integral sheet of flexible material extending lengthwise between a proximal end and a distal end, the sheet having a first upper flap portion, a second upper flap portion, and a base, the first upper flap portion being joined to the base at a proximal fold region defining the proximal end of retainer member, the second upper flap portion being joined to the base at a distal fold region defining the distal end of the retainer member, the base having an arcuate portion forming a ridge with a sloping proximal side and a sloping distal side, each of said sloping proximal and distal sides having at least one aperture for reception therethrough of an elongated portion of a surgical instrument, and

c) locking means for engaging the first upper flap portion and the second upper flap portion.

5,699,910

MECHANIC'S TRAY

Danny Kubat, 518 Alondra Dr., Huntington Beach, Calif. 92626

Filed Dec. 19, 1995, Ser. No. 576,408

Int. Cl.⁶ B65D *85/28*

U.S. Cl. 206—373 **5 Claims**

1. A mechanic's tray for holding parts while servicing machinery, said tray comprising:

a tray having a floor and four walls comprising a front wall, a right side wall, a left side wall and a back wall;

a first magnet assembly pivotally held on a magnet support arm held by said tray, said first magnet assembly and support arm including means for tightening said support arm and said first magnet assembly in a desired position, said first magnet assembly including a magnet and a ferromagnetic cup having a magnet face; and

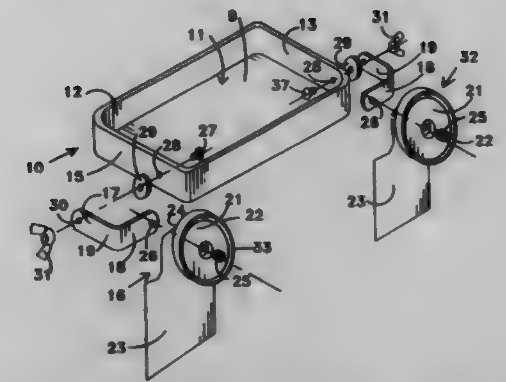

a second magnet assembly pivotally held on a magnet support arm by said tray and independently movable with respect to said first magnet assembly, said second magnet assembly and support arm also including means for tightening said second magnet assembly and support arm in a desired position, and said second magnet assembly including a magnet and a ferromagnetic cup having a magnet face whereby said tray is affixable to a ferromagnetic surface and adjustable to a desired position; and wherein said first and second magnet assemblies each include a cushioning sheet foldable over the face of the magnet to protect a ferromagnetic surface to which it is contacted, said cushioning sheet comprising a flexible sheet affixed to said support arm and extending away from said support arm and being sufficiently large so that it may be folded over the magnet face and sufficiently flexible so that it may be folded away to expose said magnet face.

5,699,911

HYGIENIC PACKAGE WITH A RECLOSABLE FLAP

Gary Curtis Joseph; Charles John Berg, Jr., both of Cincinnati, and Ricky Alan Pollard, Moscow, all of Ohio, assignors to The Procter & Gamble Company, Cincinnati, Ohio

Filed Aug. 9, 1996, Ser. No. 695,281

Int. Cl.⁶ A61F *13/20*

U.S. Cl. 206—494 **13 Claims**

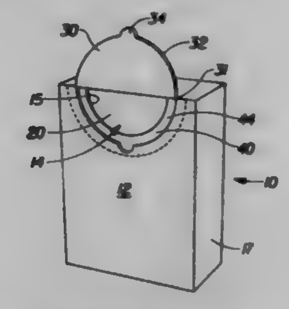

1. A package for containing hygienic articles to be dispensed therefrom, said package comprising:

a container body for holding said hygienic articles, said container body having at least one wall with an opening therethrough, said opening being cut from said wall and having a first predetermined open area exposing a first exposed area of said hygienic articles;

a retaining band juxtaposed with said opening and joined to said wall, said retaining band covering a portion of said first exposed area, thereby decreasing said first exposed area to form an aperture through which said hygienic articles are dispensed, said aperture having a second predetermined open area smaller than said first predetermined open area;

a cover flap hingedly connected to said container body, said cover flap being articulable between a first open position whereby said hygienic articles can be dispensed and a second closed position whereby said hygienic articles are not exposed outside said package, whereby in said closed position said cover flap covers substantially all of said aperture; and

a fastening means to fasten said cover flap in said closed position.

5,699,912

CONTAINER FOR WETTED TISSUES

Hiroki Ishikawa; Yasuhiko Kenmochi, both of Kagawa-ken; Takeshi Bando, Ehime-ken; Masaho Hayashi, and Norikazu Shinogi, both of Tokyo, all of Japan, assignors to Uni-Charm Corporation, Ehime-ken, Japan

Continuation of Ser. No. 663,461, Jun. 14, 1996, abandoned.

This application Nov. 27, 1996, Ser. No. 745,804

Claims priority, application Japan, Jun. 15, 1995, HEI7-149092; Feb. 28, 1996, HEI8-41713

Int. Cl.⁶ B65D *73/00*

U.S. Cl. 206—494 **13 Claims**

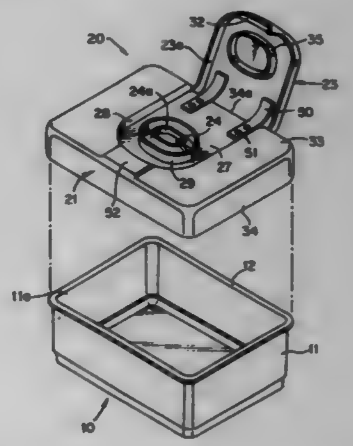

1. A container for wetted tissues comprising a container body, a stationary lid member and a movable lid member each molded from a suitable synthetic resin material; wherein:

said body has a first opening on an upper side thereof through which a stack of wetted tissues is packed thereinto;

said stationary lid member includes an outer locking periphery adapted for detachably and sealably fitting on said first opening, a first upper surface region defined by said outer locking periphery and a first peripheral edge having spaced apart front and rear edges, a second upper surface region defined by said first peripheral edge, and a second opening formed in said second upper surface region substantially at a central zone thereof through which wetted tissues are picked out;

said movable lid member includes a second peripheral edge projecting from an inner surface thereof so as to fit on said first peripheral edge thereby to define a space between said second upper surface region of said stationary lid and said inner surface of said movable lid member, having spaced apart front and rear edges and being hinged to said stationary lid member adjacent said rear edge;

an elastic strip made of a nonmetallic material normally biasing said movable lid member to be opened extends across said rear edges of said stationary and movable lid members and held between said second upper surface region and said inner surface of said movable lid member wherein said elastic strip is at least partially curved generally in a U-shape or Ω-shape and charged with an elastic energy within said space as said movable lid member is closed;

at least one of said front edges of said stationary and movable lid members opposed to each other upon closure of said movable lid member includes a locking projection adapted to be detachably engaged with the other; and

said first upper surface region is provided adjacent said locking projection with an elastically deformable depressor means serving to release said engagement of said locking projection.

5,699,913
UNITIZED PACKAGE ASSEMBLY
Rebecca Kimbrell Richardson, Garland, Tex., assignor to Cellstar, Ltd., Carrollton, Tex.
Filed Nov. 30, 1995, Ser. No. [illegible]65,159
Int. Cl.^{6} B65D *73/00*
U.S. Cl. 206—470 **10 Claims**

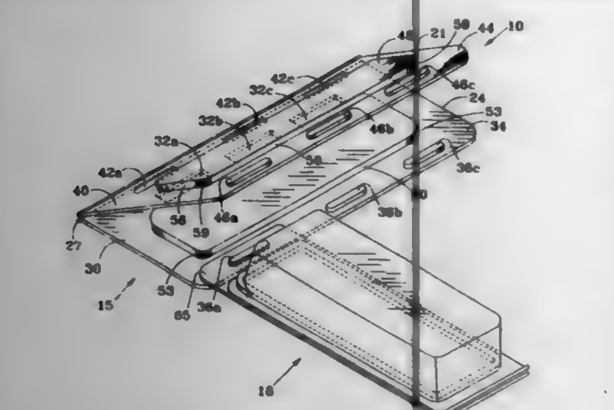

1. A unitized package assembly, comprising:
a header including front and back panels extending downwardly from an upper flange to a lower flange;
a plurality of projections formed in the lower flange of the back panel of the header;
indents formed in the lower flange of the front panel to correspond with and receive the projections in locking engagement therewith;
a plurality of articles depending from the header;
a tab extending from each article including an aperture for receiving therethrough one of the projections from the lower flange of the back panel of the header to secure the tab extending from the article between the front and back panels.

5,699,914
NESTABLE CONTAINER
Rogier Broersma, Bergen, Netherlands, assignor to Diafer B.V., Bergen, Netherlands
PCT No. PCT/NL95/00253, § 371 Date Jan. 27, 1997, § 102(e) Date Jan. 27, 1997, PCT Pub. No. WO96/03323, PCT Pub. Date Feb. 8, 1996
PCT Filed Jul. 19, 1995, Ser. No. 776,156
Claims priority, application Netherlands, Jul. 26, 1994, 9401221
Int. Cl.^{6} B65D *19/18*
U.S. Cl. 206—517 **15 Claims**

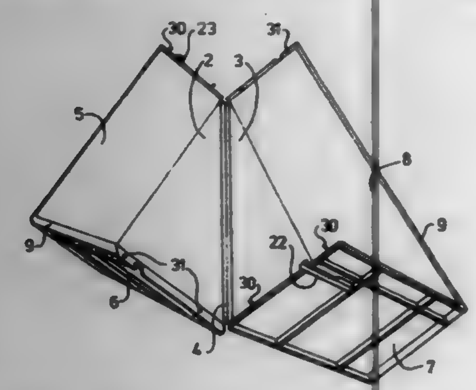

1. Nestable container comprising a base (1) which comprises two base halves (2, 3) joined along a hinge line (4), as well as walls (5–8) which are upright with respect to the base (1) and in which breaks are provided in such a way that the container halves defined by the base halves (2, 3) are hingeable with respect to one another between a closed position and an open position in which the container is nestable, characterised in that the hinge line (4) runs obliquely with respect to at least one of the walls (5–8).

5,699,915
PALLETIZED PEAT MOSS IN BULK COMPRESSED FORM
Régis Berger; Yves Gauthier; Albert Couillard, and Rolland Belzile, all of Quebec, Canada, assignors to Berger Mix Inc., Quebec, Canada
Continuation of Ser. No. 472,242, Jun. 7, 1995, abandoned, which is a division of Ser. No. 170,893, Dec. 21, 1993, Pat. No. 5,477,658. This application Nov. 12, 1996, Ser. No. 746,455
Int. Cl.^{6} B65D *19/00*
U.S. Cl. 206—597 **2 Claims**

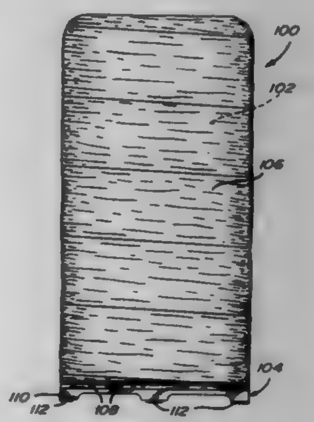

1. Palletized peat moss in bulk compressed form, comprising a pallet, a body of compressed peat moss in bulk form upstanding from said pallet and compressed directly thereon, said peat moss having a water-content in the range of about 25 to about 50 weight %, and a fluid impervious wrap material wrapping said body of compressed peat moss so as to retain the peat moss in bulk compressed form on said pallet and to maintain the water-content of said peat moss, said wrap material and said pallet defining an enclosure completely enclosing said body of peat moss with said enclosure having a bottom constituted by said pallet.

5,699,916
INTEGRATED CIRCUIT WAFER CONTAINER
Wen-Sheng Liang, Hsin-Chu, Taiwan, assignor to Taiwan Semiconductor Manufacturing Company Ltd., Hsin-Chu, Taiwan
Filed Feb. 3, 1997, Ser. No. 794,600
Int. Cl.^{6} B65D *85/30*
U.S. Cl. 206—710 **9 Claims**

1. An improved integrated circuit wafer container for storing large diameter integrated circuit wafers therein, having an enclosure member and a body member, the body member having a base with spaced longitudinally directed portions adapted to encircle and hold wafers stacked on the base, the enclosure member having a circular shaped top wall and a cylindrical shaped side wall that encompasses and encircles the longitudinally directed portions of the body members, a threaded portion on the lower end of the cylindrical wall that engages with a complimentary threaded portion on the base that selectively secures the enclosure member to the body member, the improvement comprising,
an upwardly extending thick concentric circular flange on said circular shaped top wall adjacent the periphery of said top wall, a central upwardly extending protrusion on the top wall, and a plurality of radially extending ribs between said circular flange and said central protrusion.

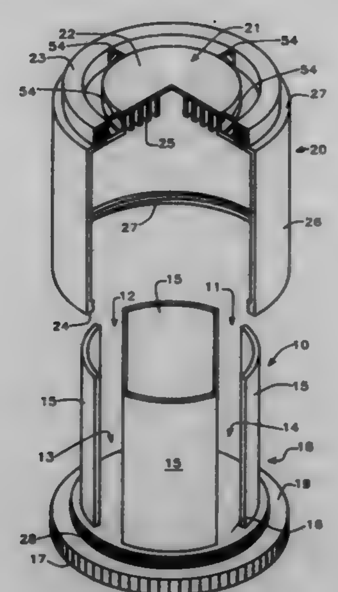

5,699,917
METHOD AND APPARATUS FOR SEPARATING CROPS AND IMPURITIES
Klaus Klintworth, and Johann Klintworth, both of Finkenstrasse 39, 21624 Buxtehude, Germany
Continuation of Ser. No. 518,008, Aug. 22, 1995, abandoned. This application Mar. 5, 1997, Ser. No. 810,904
Claims priority, application Germany, Aug. 23, 1994, 44 29 865.4
Int. Cl.^{6} B03B *5/60*
U.S. Cl. 209—18 **9 Claims**

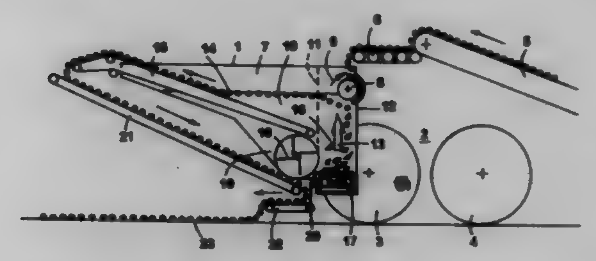

1. A method for separating crops of a first specific gravity from impurities of a second, relatively greater specific gravity, the separation taking place in a liquid flow, characterized by the steps of:
providing a volume of liquid;
directing a separating liquid flow in an upward direction within the volume of liquid toward a liquid surface,
depositing a random assemblage of crops and impurities to be separated directly into the liquid surface in a direction against the upward direction of the separating liquid flow, and
adjusting the velocity of the separating liquid flow in manner to cause the impurities of said second, relatively greater specific gravity to drop through the liquid in the separating liquid flow in a direction contrary to the upward direction of the separating liquid flow within the volume of liquid and to cause the crop of said first specific gravity to be maintained, by the separating liquid flow, in a region at least close to the liquid surface.

5,699,918
SCREEN FOR VIBRATING MATERIAL SORTING APPARATUS
Donald C. Dunn, Mesa, Ariz., assignor to Corrosion Engineering, Inc., Mesa, Ariz.
Filed Jul. 26, 1996, Ser. No. 687,719
Int. Cl.^{6} B07B *1/49*
U.S. Cl. 209—397 **20 Claims**

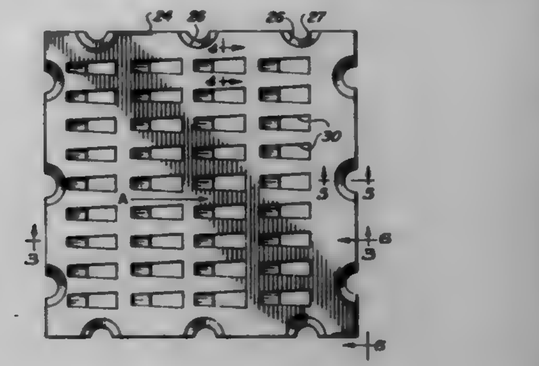

1. A screen for a vibrating material sorting apparatus including in combination:
a main body member having an upper planar surface and a lower surface for mounting in a material sorting apparatus, said main body member having a plurality of elongated trapezoidal apertures formed therethrough between said upper and lower surfaces for permitting material of a predetermined size determined by the dimensions of said apertures to pass therethrough from said upper surface of said main body member.

5,699,919
METHOD AND APPARATUS FOR REMOVING BARK BALLS FROM A LOG FLOW
Matti Pylkkanen, Duluth, and Lennart Thornquist, Doraville, both of Ga., assignors to Andritz-Patentverwaltungs-Gesellschaft m.b.H., Graz, Austria
Filed Jul. 26, 1995, Ser. No. 507,203
Claims priority, application Finland, Jan. 16, 1995, 950177
Int. Cl.^{6} B07C *5/14*
U.S. Cl. 209—518 **20 Claims**

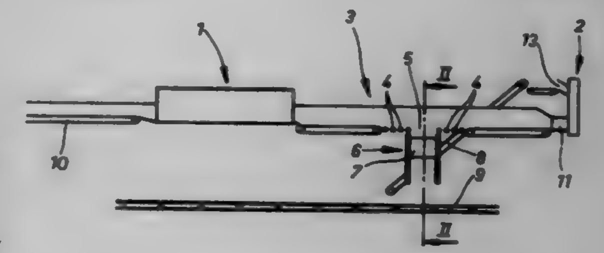

1. A method for removing bark balls from a log flow traveling on a conveyor comprising the steps of:
conveying the log flow from a debarking drum to a chipper on a conveyor, said conveyor including a roller assembly disposed at a pre-determined distance upstream from said chipper and having an opening for dumping from said conveyor a sub-flow consisting of wood pieces and bark balls, and
dividing the sub-flow dumped from said conveyor by a dividing means into a first portion including mainly wood pieces and a second portion including mainly bark balls.

5,699,920
PUMP NURSER FOR EXPELLING AIR FROM DISPOSABLE LINERS
Frank Ida, 1 Jillit Dr., Smithtown, N.Y. 11787, and Luciano DiScala, 111 Arpage Dr. East, Shirley, N.Y. 11967
Filed Aug. 21, 1995, Ser. No. 517,709
Int. Cl.[6] A61J *9/04*
U.S. Cl. 215—11.3 **4 Claims**

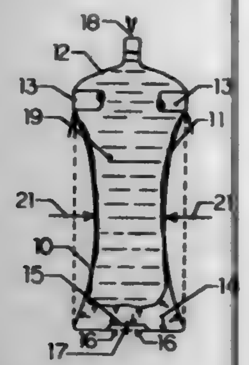

1. A method of feeding an infant with a bottle, comprising;
providing a bottle,
the bottle having a resilient shell body having an open top end and an aperture,
a nipple attached to the shell body top end,
a air flow check valve over the aperture,
a flexible liner suspended from the shell body top end creating a chamber between the liner and shell body,
filling the flexible liner,
applying pressure to the shell body to collapse the shell body and force air in the liner through the nipple,
releasing the pressure to the shell body and allowing air to enter the chamber through the air flow check valve, the air preventing the liner from expanding and allowing air to enter the liner through the nipple,
feeding the bottle to an infant.

5,699,921
SYSTEM FOR USE IN DELIVERING AIR INTO THE INTERIOR OF A BABY-BOTTLE
Victor Jose Rodriguez, Notre Dame H-21, Caquas, Puerto Rico, 725
Filed Apr. 5, 1996, Ser. No. 630,931
Int. Cl.[6] A61J *9/00;9/04*
U.S. Cl. 215—11.5 **1 Claim**

1. A new and improved system for use in delivering air into the

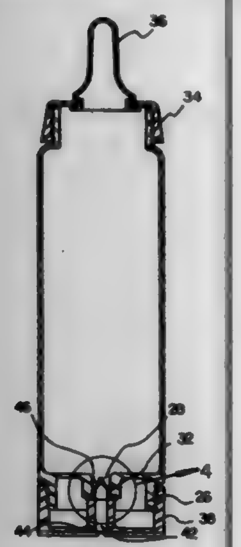

interior of a baby bottle while the baby is feeding, comprising, in combination:
a plastic cylindrical container with a diameter and an interior having a forward dispensing end and a rearward bottom end, the forward dispensing end being externally threaded, the rearward bottom end having a cylindrical minor portion having a length and a diameter and being externally threaded, the diameter of the cylindrical minor portion being less than the diameter of the cylindrical container, a centrally disposed aperture formed through the bottom end of the container, a cylindrical flange surrounding the aperture and extending downwardly from the bottom end, the cylindrical flange having a length and a diameter both smaller than the length and diameter of the cylindrical minor portion;
a cylindrical top cap portion having an interior region and a nipple centrally positioned within the cylindrical top cap portion, the interior region being threaded with the threads of the interior region adapted to engage with the external threads of the forward dispensing end of the cylindrical container;
a plastic cylindrical bottom cap having an interior region with an aperture formed through the cylindrical bottom cap, a cylindrical flange formed around the aperture of the bottom cap and extending upwardly therefrom, the interior region of the bottom cap being threaded with the threads of the bottom cap adapted to engage the external threads of the cylindrical minor portion; and
a plastic one-way valve having a forward air expelling end and a rearward air accepting end, the one-way valve adapted to be coupled to the cylindrical flange of the aperture of the bottom end of the container such that the forward air expelling end is adjacent the interior cylindrical container and the rearward air accepting end is adjacent the rearward bottom end of the cylindrical container, the cylindrical bottom cap adapted to be threadably secured over the cylindrical minor portion such that the cylindrical flange of the bottom cap interconnects with the cylindrical flange of the rearward bottom end of the cylindrical container with the one-way valve secured therebetween.

5,699,922
DETACHABLE CLOSURE SYSTEM FOR AN OPEN-ENDED TUBULAR MEMBER
Claude J. Harding, Phoenix, Ariz., assignor to MHD Corporation, Glendale, Ariz.
Filed May 21, 1996, Ser. No. 651,000
Int. Cl.[6] B65D *41/04;50/04;55/02*
U.S. Cl. 215—208 **21 Claims**

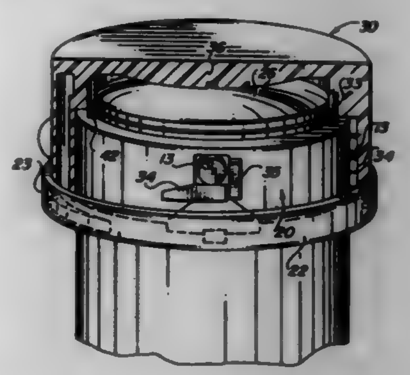

1. A detachable closure system comprising:
A) a tubular member, said tubular member being open-ended at a first end thereof;
B) at least one pair of diametrically opposed pins extending radially outwardly from an outer surface of said tubular member;
C) an outer cap member and an inner cap member;
1) said inner cap member including:

a) an inner cap member tubular body having an inner diameter which exceeds the outer diameter of said tubular member, said inner cap member tubular body being open-ended at a first end thereof and closed at a second end thereof;
b) at least one pair of diametrically opposed openings, each said opening extending axially from said first end of said inner cap member tubular body for a distance which exceeds the distance between said first end of said tubular member and one of said pins, the width of each said opening being sufficient to receive one of said pins; and
c) a lower coaxial dome member having an apex extending from said second end of said inner cap member tubular body away from said first end thereof; and
2) said outer cap member including:
a) an outer cap member tubular body having an inner diameter which exceeds the outer diameter of said inner cap member tubular body, said outer cap member tubular body being open-ended at a first end thereof;
b) an upper coaxial dome member having an apex extending from said second end of said outer cap member tubular body toward said first end thereof and facing said apex of said upper coaxial dome member; and
c) at least one pair of circumferentially oriented, diametrically opposed locking wedges disposed on an inner surface of said outer cap member tubular body, each said locking wedge including a ramp portion; and
D) assembly means for fixing said outer cap member over said inner cap member in a coaxial nesting relationship to effect a cap assembly, said assembly means being adapted to permit mutual rotation between said outer cap member and said inner cap member;
whereby, when said cap assembly is coaxially emplaced over said first end of said tubular member in juxtaposition such that said pins are received in said openings to thereby inhibit mutual rotation between said inner cap member and said tubular member, mutual rotation between said outer cap member and said inner cap member in a first direction brings said ramp portion of each said locking wedge into engagement with one of said pins, said mutual rotation in said first direction thereby drawing said cap assembly and said tubular member together; and mutual rotation between said outer cap member and said inner cap member in a second direction permits removal of said cap assembly from said tubular member and further whereby, when said inner and outer cap members are assembled, a bearing point for mutual rotation therebetween is established at the facing apexes of said upper and lower domes.

5,699,923
COMBINATION STOPPER-SHIELD CLOSURE
James A. Burns, Elizabeth, N.J., assignor to Becton, Dickinson and Company, Franklin Lakes, N.J.
Continuation of Ser. No. 280,621, Jul. 26, 1994, abandoned, which is a continuation-in-part of Ser. No. 58,854, May 6, 1993, Pat. No. 5,494,170. This application May 31, 1996, Ser. No. 657,736
Int. Cl.[6] B65D *41/28*
U.S. Cl. 215—247 **5 Claims**

1. A closure for sealing an open end of a body fluid collection tube configured to be received in a needle holder comprised of a cylindrical wall having a needle disposed within the needle holder at a distal end, said closure comprising:
a shield having a wall and an outer skirt having a plurality of flexible tabs extending therefrom;
a sealing element for sealing the open end of the tube having an upper flange that is received in said shield and includes a top surface, wherein said top surface of said sealing element in conjunction with said wall of said shield form a well having a central aperture; and
a gas-barrier member bonded to said closure to improve vacuum retention within the tube and protect said well from contamination,

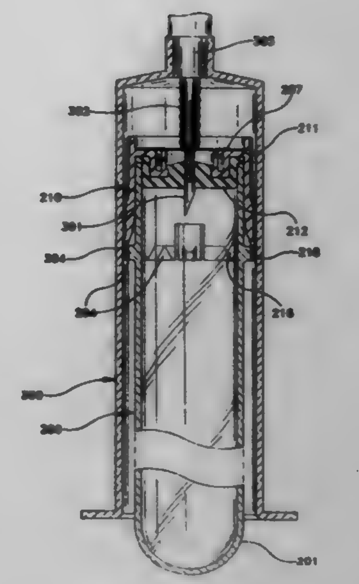

wherein said closure is firmly retained in the needle holder during body fluid collection by interaction between said flexible tabs on said shield and the cylindrical wall of the needle holder.

5,699,924
ATTACHMENT OF TAMPER-EVIDENCING BAND TO CLOSURE SKIRT
Nicholas A. Mascio, and Douglas S. Martin, both of New Castle, Pa., assignors to Portola Packaging, Inc., San Jose, Calif.
Filed Apr. 26, 1996, Ser. No. 638,033
Int. Cl.[6] B65D *41/32;41/52;47/10*
U.S. Cl. 215—252 **10 Claims**

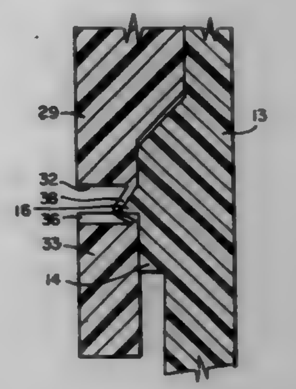

1. In combination, a cap and a neck over which said cap fits, said cap comprising a skirt having a bottom edge, a drop band below said skirt and a plurality of bridges interconnecting said skirt and said band,
said neck comprising an external bead engaging said skirt and said band and an external ring extending outward of said bead positioned to protrude outward above said band when said cap is assembled on said neck to restrain upward movement of said cap relative to said neck while said bridges are intact, said ring engaging and bowing outwardly said bridges.

5,699,925
INTERLOCKING STACKABLE CONTAINER STORAGE SYSTEM
Thomas G. Petruzzi, 5118 Belleville Ave., Orlando, Fla. 32812
Filed May 14, 1996, Ser. No. 649,136
Int. Cl.⁶ B65D *21/036*
U.S. Cl. 220—4.27 **22 Claims**

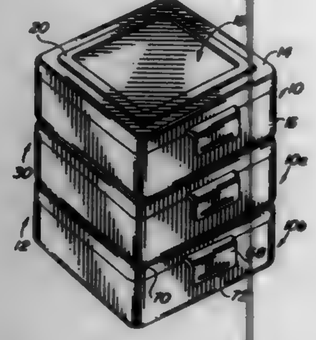

1. A container operable within a storage system having similar containers interlockable in a vertically stacked configuration, the storage system useful in organizing and storing articles, the container comprising opposing top and bottom walls, wherein an upwardly projecting tongue extends from one of the container walls, the tongue having outwardly diverging side walls terminating in a tongue edge portion, and wherein a cavity within the opposing container wall has opposing side walls converging toward a cavity opening for receiving the tongue of an adjoining similar container therethrough and attaching the tongue within the cavity, the tongue and cavity each formed as an annulus extending proximate peripheral top and bottom wall edge portions, the cavity side walls cooperating with the tongue side walls while the tongue is attached within the cavity, the cavity opening being slightly smaller than the tongue edge portion, the tongue and cavity formed from material sufficiently flexible for permitting the tongue edge portion from the adjoining container to be forced through the cavity opening for positioning the tongue within the cavity, thus coupling the adjoining containers in a vertically stacked and interlocked position.

5,699,926

Patent Not Issued For This Number

5,699,927
BEVERAGE CUP LID HAVING PERIPHERAL LOCKING MEANS FOR DRINKING OPENING CLOSURE MEMBER
William F. Lane, Wilson, and Robert C. Williams, Raleigh, both of N.C., assignors to Bailey Marketing Group, Inc., Rocky Mount, N.C.
Continuation of Ser. No. 307,303, Sep. 16, 1994, Pat. No. 5,490,609. This application Feb. 12, 1996, Ser. No. 598,562
Int. Cl.⁶ B65D *51/15;* **A47G** *19/22*
U.S. Cl. 220—254 **23 Claims**

1. A lid for an open-mouthed drinking cup of the type having a rim portion about the mouth thereof, said lid comprising:

a cover portion for covering the open mouth of a drinking cup, said cover portion having a periphery;

an annular cavity at the periphery of the cover portion in the form of an inverted U-shaped well having an upper closed end and a pair of depending spaced-apart inner and outer walls joined to the closed end, said spaced-apart walls serving to frictionally engage the rim portion of a drinking cup;

the inner wall of said U-shaped well being interrupted along a discrete arcuate portion of the cover portion periphery while leaving the outer wall and at least a portion of the upper closed end of the U-shaped well uninterrupted;

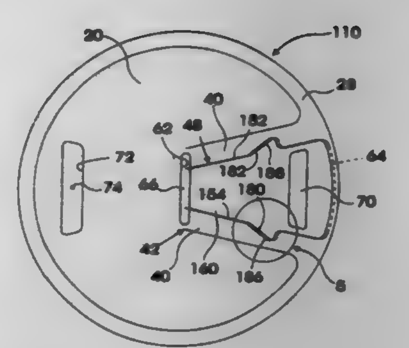

said cover portion including a drinking section extending radially outwardly from a central location of said cover portion to the periphery of the cover portion and joining the upper closed end of said well along the discrete arcuate portion of the lid periphery where the inner wall is interrupted;

a drinking opening formed in said drinking section;

a closure member for the drinking opening, said closure member being hinged to the cover portion at a medial location thereon and having, in operation, a sufficient radial dimension to permit the outward marginal edge portion of the closure member to reside under the lid material at the upper closed end of said U-shaped well; and

said cover portion and closure member including mating locking components for locking the closure member in a fully open position.

5,699,928
EASY FLIP TOP TAB LIFTER
Sung I. Chung, and Katalina Park, both of 360 S. Burnside Ave., Apt. #2K, Los Angeles, Calif. 90036
Filed Jun. 24, 1996, Ser. No. 669,135
Int. Cl.⁶ B65D *17/36*
U.S. Cl. 220—269 **8 Claims**

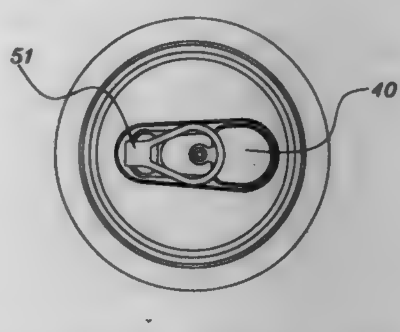

1. A device for assisting the opening of a can having a pivoting tab with an aperture therethrough for opening a tear panel, said device being composed of malleable plastic and comprising:

a. a flat, rectangular portion;

b. an adhesive strip along one edge of one surface of said rectangular portion;

c. a corresponding adhesive strip along an opposite edge of the same surface of said rectangular portion;

d. a flat ring portion extending from said one edge of said rectangular portion having said adhesive strip applied thereto;

e. said flat, rectangular portion defining a looping means for attaching said device to said pivoting tab, wherein said rectangular portion is of a size that said rectangular portion is foldable into two opposing portions and looped through said aperture of said pivoting tab and secured thereto by said adhesive strips.

5,699,929
GARBAGE CONTAINER
Taiichi Ouno, 5-28, Biwajima 2-chome, Nishi-ku, Nagoya-shi, Aichi-ken, Japan
Filed Mar. 25, 1996, Ser. No. 622,361
Int. Cl.⁶ B65D *45/28*
U.S. Cl. 220—323 **9 Claims**

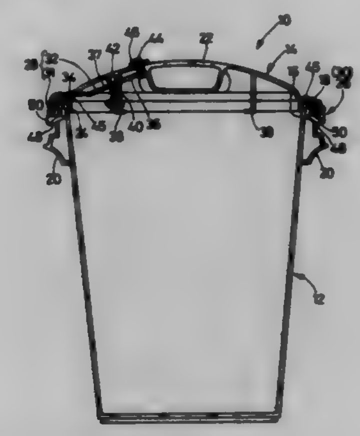

1. A garbage container comprising:

a body member for containing garbage therein, said body member having an upper opening;

a lid member for closing said upper opening of said body member, said lid member having a handle which is formed integrally therewith and provided on an upper surface thereof, said handle being gripped with a hand of a user for moving said lid member to close or open said upper opening of said body member;

at least one engageable member which is provided on said lid member and which is engageable with said body member to prevent the lid member from separating from the body member, said engageable member including a hook portion which is engageable with an outer upper portion of said body member defining said upper opening thereof, and being movable relative to said lid member so that said hook portion thereof projects outward over an outer peripheral edge of the lid member by a predetermined distance, said engageable member further including an operational portion extending from said hook portion thereof toward said handle of the lid member; and

an operable member which is slidable on said lid member relative to said handle formed integrally with the lid member, is connected to said operational portion of said engageable member, and is movable by the user for moving or displacing said engageable member between an engaged position where said hook portion of the engageable member is engaged with said outer upper portion of said body member and a disengaged position where the hook portion of the engageable member is disengaged from the outer upper portion of said body member, said operable member being provided on, or in a vicinity of, said handle of the lid member such that the operable member is accessible by the hand of the user grasping the handle.

5,699,930
TANK ASSEMBLY AND METHOD FOR WATER TREATMENT
Alan B. Channell, Columbia City, and Terry S. Shears, Fort Wayne, both of Ind., assignors to Chemical Engineering Corporation, Churubusco, Ind.
Division of Ser. No. 561,298, Nov. 21, 1995, Pat. No. 5,584,411. This application Aug. 23, 1996, Ser. No. 702,275
Int. Cl.⁶ B65D *90/04*
U.S. Cl. 220—465 **7 Claims**

1. A tank system for use in water treatment comprising:

a tank having a molded liner of unitary construction with an integrally formed tank flange defining an opening and a surface generally co-planar with said opening, and an outer filament wound shell on said liner;

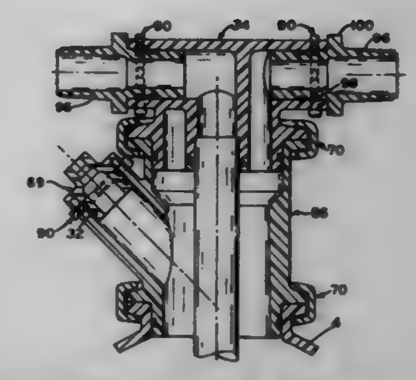

a plurality of interchangeable heads, each being apadapted to receive and introduce untreated water into said tank and discharge treated water from said tank, each said head having a generally cylindrical neck with an end and a neck flange extending from said neck at a position axially distant from said neck end; said neck being adapted for insertion into said tank opening, and said neck flanges and said tank flange being adapted for mutual attachment;

a clamp for securing a selected one of said plurality of heads to said tank liner; and

an O-ring seal circumferentially disposed between said neck of said secured head and said liner;

whereby said tank is adaptable for use with said plurality of interchangeable heads and each of said heads are capable of removable attachment to said tank, an inlet line and an outlet line.

5,699,931

Patent Not Issued For This Number

5,699,932
CAN BODY HAVING SIDEWALL GROOVES
Paul Charles Claydon, and Christopher Paul Ramsey, both of Oxfordshire, United Kingdom, assignors to Carnaudmetalbox (Holdings) USA Inc., Wilmington, Del.
PCT No. PCT/GB94/02620, § 371 Date Jun. 4, 1996, § 102(e) Date Jun. 4, 1996, PCT Pub. No. WO95/15227, PCT Pub. Date Jun. 8, 1995
PCT Filed Nov. 30, 1994, Ser. No. 646,328
Claims priority, application United Kingdom, Dec. 4, 1993, 9324910
Int. Cl.⁶ B65D *1/44*
U.S. Cl. 220—671 **6 Claims**

1. A can body (1) comprising a side wall provided with a longitudinal externally concave grooves (12) and externally convex panels (13) which extend between cylindrical portions (4, 8) of the side wall.

the grooves are between 0.5 mm and 1 mm wide between inflection points;
the panels are wider than the grooves and have a radius of curvature less than that of the cylindrical portions, and the grooves and panels connect directly with the cylindrical portions of the side wall.

5,699,933
VALVE FOR A WATER DISPENSER FOR BICYCLISTS
Kuo-Ping Ho, P.O. Box 82-144, Taipei, and Ping-Lien Chieng, Taipei Hsien, both of Taiwan, assignors to Kuo-Ping Ho, Taiwan
Filed Dec. 9, 1996, Ser. No. 761,894
Int. Cl.⁶ B65D *51/18*
U.S. Cl. 220—703 **2 Claims**

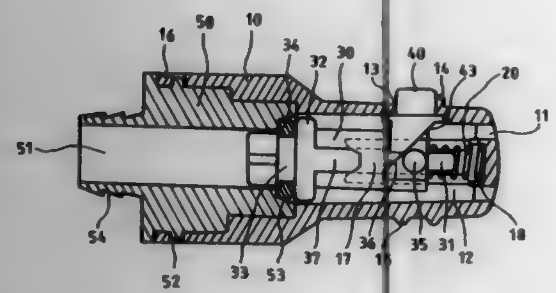

1. A valve for a water dispenser comprising:
a housing formed with outlets at a first end thereof and an opening at a top thereof, said outlets and said opening being in communication with interior of said housing, said first end of said housing having an elongated projection at an upper surface thereof and two elongated protuberances at a lower surface thereof, a second end of said housing having a resilient tongues, the interior of said housing being formed with two opposite longitudinal grooves;
a resilient member disposed within said housing and having an end bearing against said first end;
a slide having a front portion provided with two portrusions at two opposite sides thereof each formed with an inclined edge, two aligned arms each extending outwardly a respective one of said protrusions, and a longitudinal cylindrical end adapted to fit into another end of said resilient member, a rear portion of said slide being formed with a neck, said intermediate portion of said slide having a circular flange adjacent to said neck and two longitudinal ribs at two opposite sides thereof, and a O-ring being fitted in said neck of said slide;
a button having a body portion partly protruded out of said opening of said housing, said body portion being formed with two stop arms extending horizontally outwardly from two opposite sides of said body portion, and two legs depending downwardly from said body portion, said legs being formed with an inclined edge adapted to engage with said inclined edge of said slide; and
an inlet connector having a longitudinal passage, two protuberances at an upper and lower sides thereof adapted to engage with said resilient tongues of said housing, a circular recess at an end thereof adapted to engage with said O-ring, and a plurality of annular teeth at another other end thereof.

5,699,934
DISPENSER AND METHOD FOR DISPENSING VISCOUS FLUIDS
Joseph F. Kolcun, Binghamton; Stanley W. Janisiewicz, Endwell, and Koenraad A. Gieskes, Binghamton, all of N.Y., assignors to Universal Instruments Corporation, Binghamton, N.Y.
Filed Jan. 29, 1996, Ser. No. 593,466
Int. Cl.⁶ B67B *7/00*
U.S. Cl. 222—1 **13 Claims**

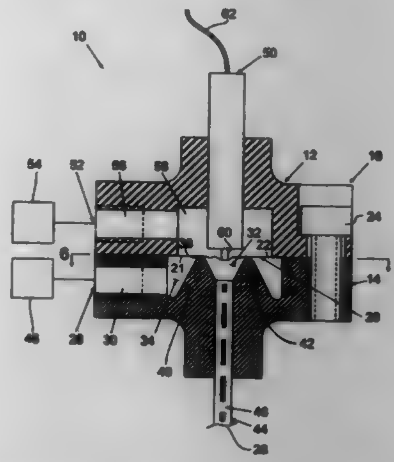

1. A dispenser for dispensing discrete predetermined micro quantities of viscous fluid, the dispenser comprising:
a viscous fluid supply for supplying pressurized viscous fluid to the dispenser;
a viscous fluid outlet for dispensing viscous fluid from the dispenser;
a viscous fluid passageway fluidly connecting said viscous fluid supply and said viscous fluid outer;
said viscous fluid passageway connecting an outer feed cavity and an inner dispense cavity, and an inter-cavity dam between said inner and outer cavities, such that during the dispensing process the viscous fluid travels from said outer cavity to the inner cavity, via said viscous fluid passageway;
a diaphragm having a first position and a portion thereof mounted for reciprocatory movement, said diaphragm having a first surface and a second surface opposed from said first surface, said first surface defining one boundary of said viscous fluid passageway such that movement of the movable portion of the diaphragm to a second position closes said passageway at said dam, and movement of said diaphragm to a third position dispenses viscous fluid from said outlet;
a diaphragm actuator imparting reciprocatory movement to the movable portion of said diaphragm, said diaphragm actuator including a controllable pressurized actuator fluid source in fluid communication with the second surface of the diaphragm to cause the reciprocatory movement of the movable portion of said diaphragm; and
a diaphragm position sensor for determining the relative position of the movable portion of the diaphragm, said diaphragm position sensor being functionally coupled to the diaphragm actuator such that the diaphragm actuator is controllable in accordance with the relative position of the movable portion of the diaphragm permitting the accurate control of predetermined micro quantities of viscous fluid dispensed from the dispenser.
8. A method for dispensing micro quantities of a viscous fluid by a dispenser, the method comprising the steps of:
providing a diaphragm with a movable portion in a first position;
supplying a pressurized viscous fluid in fluid communication with a dispensing cavity positioned adjacent the diaphragm;
moving the movable portion of the diaphragm from the first position towards a third position;
said diaphragm moving step includes moving the movable portion of the diaphragm from the first position to a second position to prevent viscous fluid adhesive to exit the dispensing cavity fluidly coupled to the fluid outlet, and moving the diaphragm to the third position to force viscous fluid from the dispensing cavity out of the fluid outlet;
sensing the position of the movable portion of the diaphragm; and
terminating the movement of said diaphragm in response to the sensing that the movable portion of the diaphragm has reached the third position.

5,699,935
INVERTING BAG CO-DISPENSER
Robert E. Stahley, Middletown, Ohio, assignor to The Procter & Gamble Company, Cincinnati, Ohio
Filed Jan. 18, 1996, Ser. No. 588,488
Int. Cl.⁶ B67D *5/52*
U.S. Cl. 222—94 **14 Claims**

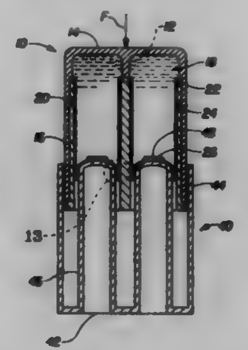

1. An inverting bag co-dispenser comprising:
a) an upper portion defining a housing and having a spout connected thereto, said housing having a plurality of side-by-side annular members supported therein, and
b) a bottom portion having a base and a plurality of upright posts connected to said base, said upper portion telescopingly engaged with said bottom portion such that one each of said plurality of upright posts is located axially aligned with one each of said plurality of side-by-side annular members, said plurality of upright posts being sized to invert a plurality of flexible bags capable of containing fluid and connected to said upper portion wherein one each of said bags is located inside one each of said plurality of side-by-side annular members in fluid communication with said spout, said plurality of flexible bags being inverted when said upper portion and said bottom portion are pressed together.

5,699,936
LIQUID DISPENSING SYSTEM
Masahiko Sakamoto, Diamond Bar, Calif., assignor to Sercomp Corporation, Chatsworth, Calif.
Filed Sep. 8, 1995, Ser. No. 525,283
Int. Cl.⁶ B65D *35/08*
U.S. Cl. 222—107 **12 Claims**

1. A liquid dispenser comprising:
a container body for storing a liquid, the container body defining a wall;
a tube member having a first end portion placed outside the container body and a second closed end portion placed inside the container body; and
an opening device provided in the second closed end portion of the tube member inside the container body for opening the second closed end portion by a bending force applied through the wall of the container body; and wherein
the container body has a top portion defining an aperture for sealingly coupling the tube member and a bottom portion opposite the top portion, wherein the bottom portion of the container has a volume sufficient to store a substantially entire portion of the liquid within the container body and the top portion of the container body has a thickness substantially thinner than that of the bottom portion to facilitate bending of the top portion of the container body and the tube member within the container body.

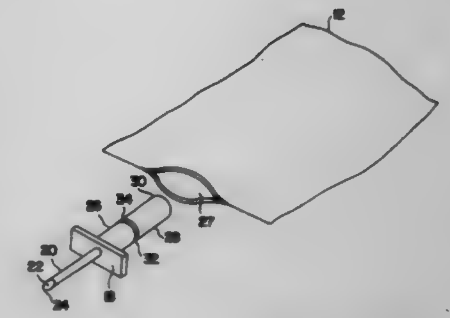

5,699,937
DRINKING CONTAINER WITH DOSAGE DISPENSER
Heriberto Canela, 8027 W. 14th Ave., Hialeah, Fla. 33014
Filed Feb. 13, 1996, Ser. No. 600,566
Int. Cl.⁶ B67D *5/56*
U.S. Cl. 222—129 **4 Claims**

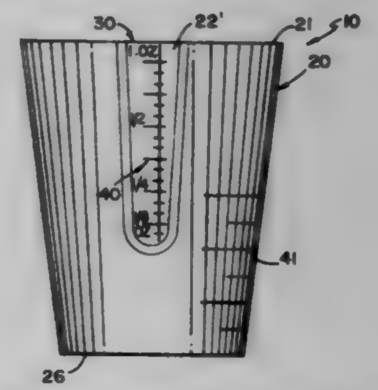

1. A container having a bottom with a peripheral wall extending therefrom that includes an inner surface, and said peripheral wall includes a rim at the distal edge, said container being capable of holding a liquid comprising:
A) dispenser means mounted on said inner surface having an opening that lies in the same plane as said rim so that a user can withdraw the contents of said dispenser means simultaneously with the pouring of a liquid inside said container; and
B) scale markings on said container and on said dispenser means so that a user can ascertain the volume of liquid inside said container and said dispenser means.

5,699,938
MOLTEN THERMOPLASTIC MATERIAL SUPPLY SYSTEM WITH REMOVABLE DRIVE ASSEMBLY
Shahid A. Siddiqui, Roswell; Roger A. Ziecker, Lawrenceville; Karen M. Wagner, Norcross, and Jocelyne Nassar, Tucker, all of Ga., assignors to Nordson Corporation, Westlake, Ohio
Filed Oct. 30, 1995, Ser. No. 550,394
Int. Cl.⁶ B67D *5/62*
U.S. Cl. 222—146.5 **15 Claims**

1. A system for supplying melted thermoplastic material to a dispenser, which comprises:
a hopper for storing the thermoplastic material;
a heating grid associated with the hopper for heating and melting the thermoplastic material;

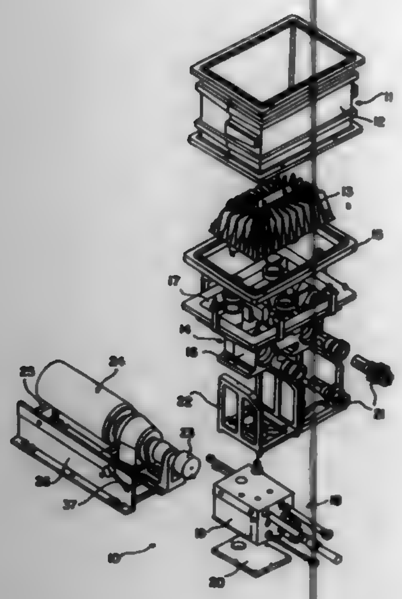

a reservoir into which the melted material flows from the grid;
a manifold assembly connected to the reservoir into which the melted material flows, the manifold assembly including connections for supplying the material to a dispenser, the manifold assembly including a pump cavity;
a pump mounted in the pump cavity and capable of being removed from the pump cavity;
a drive assembly connected to drive the pump; and
a movable carriage supporting the drive assembly, the carriage capable of movement toward and away from the manifold assembly to remove the pump from the cavity and to replace the pump into the cavity.

5,699,939
METERING OF LIQUIDS
Peter Woodman, Johannesburg, South Africa, assignor to Biochlor (Proprietary) Limited, Sandton, South Africa
PCT No. PCT/GB94/02300, § 371 Date Jul. 1, 1996, § 102(e) Date Jul. 1, 1996, PCT Pub. No. WO95/11078, PCT Pub. Date Apr. 27, 1995
PCT Filed Oct. 20, 1994, Ser. No. 633,790
Claims priority, application South Africa, Oct. 21, 1993, 93/7824; Aug. 4, 1994, 94/5849
Int. Cl.[6] B67D *5/64*
U.S. Cl. 222—166 **12 Claims**

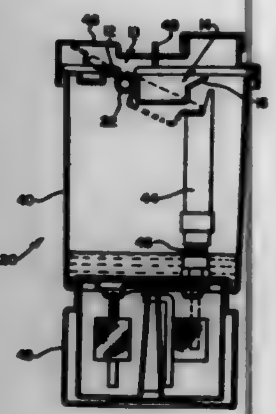

1. A metering system for metering liquid to be supplied to equipment which utilizes the liquid to generate a predetermined product, the metering system including
a body member which defines a chamber therein, the body member being mountable in a predetermined position relative to the equipment and liquid to be metered being received in the chamber; and
a discharge means in communication with the chamber of the body member, the discharge means comprising a first discharge element through which a first metered volume is dischargeable to a first part of the equipment and a second discharge element through which a second metered volume is dischargeable to a second part of the equipment.

5,699,940
DEVICE FOR REMOVING FLUID FROM A CONTAINER WITH PRESSURIZED AIR AND THEREAFTER PLACING THE CONTAINER UNDER VACUUM
James E. Clark, II, Ojai, Calif., assignor to C.H. & I. Technologies, Inc., Santa Paula, Calif.
Filed Jul. 8, 1996, Ser. No. 676,568
Int. Cl.[6] B65D *83/00*
U.S. Cl. 222—394 **7 Claims**

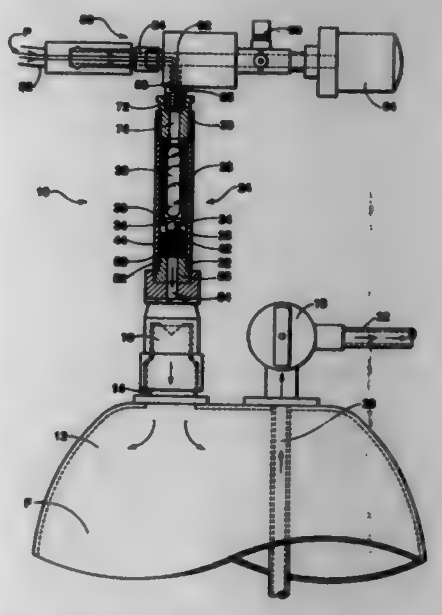

1. A device to empty fluid from a sealed pressure container by use of pressurized air, and to thereafter place the container under vacuum, said device comprising:
a sleeve portion with an upper end and lower end, an interior chamber located therein, a ring portion extending into said interior chamber and defining a seating surface at a lower side thereof, said ring portion having a hole formed therethrough;
a slidable seat means with an aperture formed therethrough, said seat means being located in said interior chamber below said ring portion and sized to loosely fit in said interior chamber and adapted to seat on said ring portion;
an upper cap means with a longitudinal air channel formed therethrough located at said upper end of said sleeve portion;
a lower cap means with a longitudinal air channel formed therethrough placed at said lower end of said sleeve portion;
a spring means placed in said interior chamber between said lower cap means and said slidable seat means, said spring means tending to bias said slidable seat means into contact with said ring portion;
a floatable ball located above said slidable seat means and adapted to fluid tightly seat on and seal off its aperture, said floatable ball being sized to freely pass through said hole in said ring portion; and
a vacuum generating means comprising a flow-through channel, a junction air channel in communication with said flow-through channel at an upper end and in communication with said channel in said upper cap means, and an air flow valve with opened and closed positions located downstream of said junction air channel.

5,699,941
METHOD AND APPARATUS FOR IMPROVED REGULATION OF FLOW OF PARTICULATE MATTER
Paul S. Johnson, 1505 Eastview, Fort Worth, Tex. 76134, and Daniel J. Johnson, 4007 Yorkshire Dr., Stillwater, Okla. 74074
Filed Apr. 4, 1995, Ser. No. 416,307
Int. Cl.[6] B67D *3/00*
U.S. Cl. 222—486 **13 Claims**

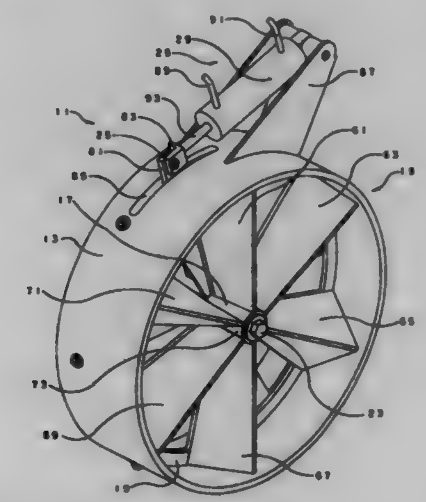

1. A flow gate for regulating flow rates of particulate matter, comprising:
(a) a generally cylindrical body defining a flow path having an inlet and an outlet;
(b) a stator member fixed in position relative to said generally cylindrical body, having a plurality of alternating tapered vane portions and inlet port portions;
(c) a rotor member interfacing with said stator member and having a plurality of alternating stop portions and outlet port portions;
(d) a rotary coupling between said rotor member and at least said stator member;
(e) a motorized position actuator receiving at least one control input and producing a corresponding displacement;
(f) a mechanical coupling between said position actuator and said rotor member; and
(g) wherein a particular flow rate within a range of available flow rates is obtained by providing a particular control input to said position actuator which in turn locates the relative positions of said inlet ports of said stator member and said outlet ports of said rotor member.

5,699,942
AUTOMATIC SLEEVE INVERTOR
Ken J. Thompson, Lexington; John R. Everhart; Wayne G. Foster, both of Winston-Salem, and Joel C. Rosenquist, Kernersville, all of N.C., assignors to Sara Lee Corporation, Winston-Salem, N.C.
Filed Jul. 21, 1995, Ser. No. 505,096
Int. Cl.[6] A41H *43/00*
U.S. Cl. 223—42 **38 Claims**

1. An apparatus for automatically inverting a garment piece for a sweat suit or the like, said apparatus comprising:
(a) a frame;

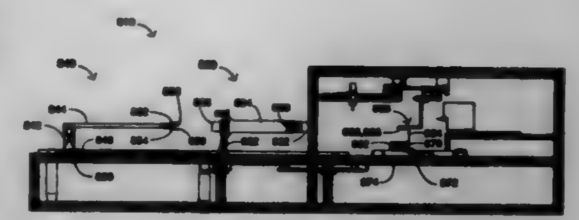

(b) an elongated tube attached to said frame having a front end and a rear end for receiving said garment piece over said front end of said tube;
(c) an elongated arm located adjacent to the rear end of said tube and movable from a first position extending from the rear to the front portion of said tube to a second position rearward of said tube;
(d) gripper means attached to one end of said arm, whereby said gripper means and arm are operable to grasp and withdraw said garment piece through the front end of said tube to the rear end of said tube to automatically invert said garment piece; and
(e) a spreader means for engaging said garment piece adjacent to the front end of said tube to position said garment piece for said gripper means, said spreader means including a frame, a pair of opposed arms attached at one end to said frame and oriented perpendicular to the axis of said tube, and means for moving said pair of opposed arms between a first position adjacent to one another and a second position apart from one another.

5,699,943
BELT-MOUNTED FLASHLIGHT HOLDER
Roger W. Schaefer, San Luis Obispo; Michael Capanna, Nipomo, and James D. Scott, Paso Robles, all of Calif., assignors to Centurion Safety Products, Inc., San Luis Obispo, Calif.
Filed Dec. 19, 1995, Ser. No. 575,061
Int. Cl.[6] A45F *5/00*
U.S. Cl. 224—197 **6 Claims**

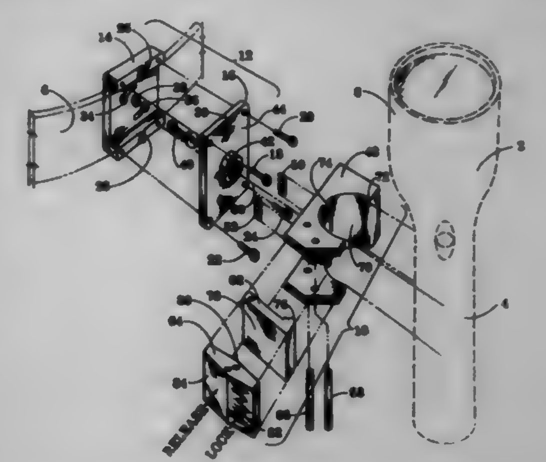

1. A belt-mounted holder for releasably securing a cylindrical object having an axis to a belt, comprising:
a cradle including a surface that defines a cavity that partially surrounds the cylindrical object;
a movable jaw pivotably attached to said cradle, having a locked position and a released position, obstructing removal of the cylindrical object from the cavity when in the locked position and when in the released position permitting removal of the cylindrical object from the cavity in a direction perpendicular to the axis of the cylindrical object without deformation of said movable jaw or said cradle; and,

a cam pivotably attached to said cradle and manually pivotable from a locked position to a released position and from the released position to the locked position, bearing against said movable jaw when in the locked position to oppose releasing movement of said movable jaw;

said cradle and said movable jaw possessing a degree of elasticity that permits the cylindrical object to be pulled from the cavity in a direction perpendicular to its axis by manual application of a predetermined amount of force when said cam and said movable jaw are in the locked position, without breaking or permanently deforming said cradle, said movable jaw, or said cam.

5,699,944

VEHICLE ROOF RACK ASSEMBLY

John A. Duran, Glendora, Calif., assignor to Avibank Mfg., Inc., Burbank, Calif.

Filed Jul. 25, 1996, Ser. No. 686,245

Int. Cl.⁶ B60R *9/04*

U.S. Cl. 224—326 **13 Claims**

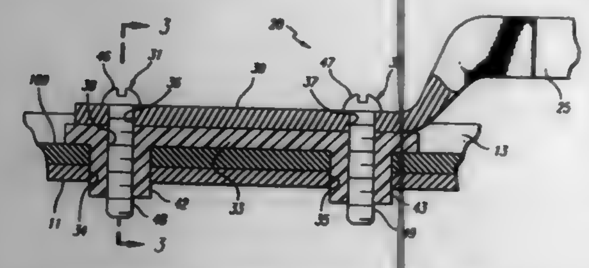

1. A luggage carrier assembly for attachment to the roof of an automobile vehicle wherein pairs of spaced holes are provided in said roof comprising:

said carrier assembly comprising a pair of spaced parallel rails having spaced holes at each end thereof and a pair of stanchions connected at opposite ends of each of said rails, each of said stanchions being adapted to be secured to one of said pair of spaced holes in said roof;

each of said stanchions including an extension portion overlying one of said pair of spaced holes through said rails and having spaced holes aligned with the spaced holes in said roof and through said rail;

a spanner disposed between each of said extension portions and all flush with the same, each said spanner being elongated and having a main body portion and a pair of downwardly extending generally cylindrical spaced apertured protrusions, smooth on the exterior thereof, and a pair of spaced holes through said main body portion aligned with the apertures in said protrusions, said protrusions extending through said pair of holes through said rail and said roof; and

a pair of self tapping screws, each of said screws having an enlarged head at one end and an integral elongated shaft portion at the other end respectively extending through the aligned holes in said extension portion, one of said apertured protrusions and said rail into one of the holes in said roof thereby securing said stanchions to said rail and said roof when said pair of screws are tightened and self threaded into said protrusions.

5,699,945

SIDE RAIL MOUNTED BICYCLE RACK FOR PICKUP TRUCKS

William H. Micklish, 885 Beldon Way, Reno, Nev. 89503

Filed Oct. 4, 1996, Ser. No. 725,488

Int. Cl.⁶ B60R *9/08*

U.S. Cl. 224—402 **5 Claims**

1. A rack for securing a bicycle on top of side rails of a pickup truck bed comprising:

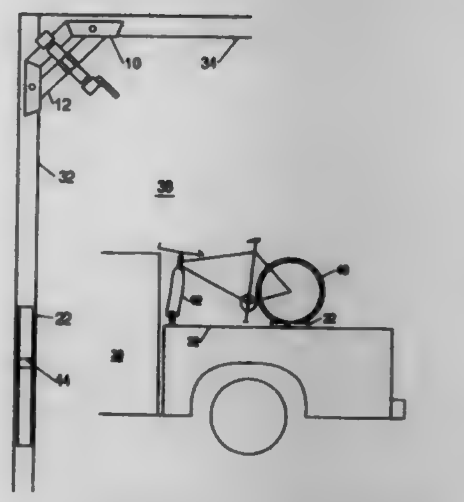

(a) at least one brace member adapted to engage a front rail and a side rail of said pickup truck bed,

(b) a support member attached to said brace member,

(c) means to receive and secure a bicycle front fork attached to said support member,

(d) a substantially U shaped channel attached to the top of said side rail with means to secure a bicycle rear wheel in said channel,

whereby said bicycle may be conveniently and safely transported without hindering the use of the pickup truck bed to transport other materials.

5,699,946

VULCANIZED SHEET COMPRISING ANNULAR RUBBER ARTICLES, A METHOD OF AND AN APPARATUS FOR SEPARATING THE ARTICLES FROM THE VULCANIZED SHEET

Koichi Hashimoto, and Michiyuki Kamiji, both of Osakashi, Japan, assignors to Nakanishi Metal Works Co., Ltd., Osaka, Japan

Division of Ser. No. 436,620, May 8, 1995, Pat. No. 5,520,979. This application Mar. 20, 1996, Ser. No. 618,819

Claims priority, application Japan, May 10, 1994, 6-96005

Int. Cl.⁶ B26F *3/02*

U.S. Cl. 225—1 **1 Claim**

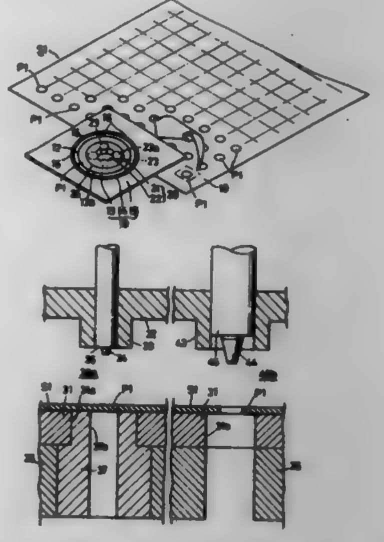

1. A method of separating annular rubber articles from a vulcanized sheet, the method comprising the steps of:

providing the vulcanized sheet which comprises: the annular rubber articles separable from the sheet and distributed over a plane body of the sheet; an outer waste formed around each article; an inner waste formed inside the article; an outer breakable boundary between the outer waste and an outer periphery of the article; the outer waste consisting of: an external flash surrounding the outer boundary; a thin annular zone intervening between the external flash and the body and being of such a thickness as preventing a vulcanization pressure from escaping; and thick external bridges formed integral with the body and the flash and disposed in and along the annular zone at regular angular intervals; an inner breakable boundary between the inner waste and an inner periphery of the article; and a recess formed centrally of the inner waste and engageable with a positioning means;

then removing the inner waste out of each annular article, by placing on a first die each of portions where the annular articles are formed in the vulcanized sheet, the first die having formed therein a bore, subsequently fitting a guide lug as the positioning means in the recess of each annular article so as to position the portion correctly relative to the first die, before gripping the portion with and between the first die and a first thruster, and thereafter causing a first punch to force the inner waste into the bore so that the inner waste is torn off the article at the inner breakable boundary, wherein the first punch having an outer diameter substantially corresponding to but slightly smaller than an inner diameter of the article; and

finally separating each annular article out of the vulcanized sheet, by placing on a second die each of the portions where the annular articles having their inner wastes removed are arranged in the vulcanized sheet, the second die having formed therein a further bore whose diameter substantially corresponds to but is slightly smaller than an outer diameter of the article, subsequently fitting a further guide lug in a space from which the inner waste has been removed so as to position the portion correctly relative to the second die, before gripping the external flash with and between the second die and a second thruster, and thereafter causing a second punch to force the annular article into the further bore so that the annular article is torn off the vulcanized sheet at the outer breakable boundary.

5,699,947

PROCESS AND MACHINE FOR PARTING THE CAP OF CONNECTING RODS, PARTICULARLY CONNECTING RODS FOR INTERNAL-COMBUSTION ENGINES

Giorgio Cavallo; Gian Luca Giovanelli, and Marco Martinis, all of Turin, Italy, assignors to Vigel S.p.A., Borgaro Torinese, Italy

Filed Oct. 10, 1995, Ser. No. 541,361

Claims priority, application Italy, Oct. 18, 1994, TO94A0826

Int. Cl.⁶ B23P *17/02*

U.S. Cl. 225—101 **9 Claims**

1. A machine for parting a cap of a connecting rod, in particular the cap of an internal combustion engine rod, comprising: a fixed frame which acts as a rigid and fixed support for a corresponding fixed semicylindrical fixture; a movable support for a corresponding movable semicylindrical fixture, said movable support being slideable along guides of said frame, said fixed and movable fixtures being juxtaposable at respective diametrical parting planes to engage an eye of a big end of the connecting rod; a hydraulic actuator which is interposed between said semicylindrical fixtures for causing diametrical expansion thereof in a direction of an axis of a shank of the connecting rod; fluid feeding means for unidirectionally feeding a stream of hydraulic fluid at a clamping pressure to said hydraulic actuator which is interposed between said fixtures; and pressure generating means for producing a momentary pressure peak that are subjected to an action of a striking mass, said striking mass acting on said pressure generating means for

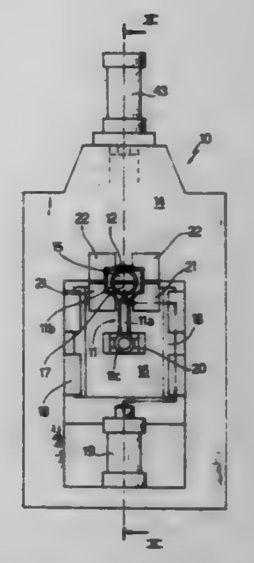

producing said momentary pressure peak in said hydraulic actuator and a consequent parting of the cap of the connecting rod.

5,699,948

ADJUSTING MEANS FOR USE IN A STAPLE GUN

Cheng-ho Lee, No. 74, Paokao Rd., Hsintien City, Taipei Hsien, Taiwan

Filed Dec. 16, 1996, Ser. No. 767,442

Int. Cl.⁶ B25C *1/14*

U.S. Cl. 227—10 **2 Claims**

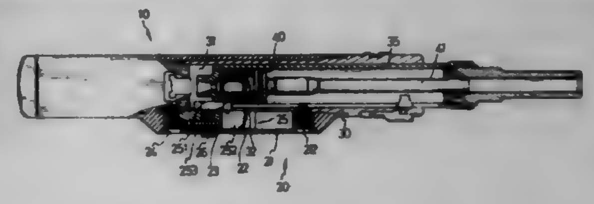

1. An adjusting means for use in a staple gun comprising

an inner tube having a driving rod and a piston movably received therein, said piston being securely connected with one end of said driving rod;

an outer tube having a slot defined therethrough and a chamber integrally defined in an end thereof and communicating with said slot, said inner tube being fixedly encased within said outer tube;

an adjusting knob;

a seat securely mounted onto said outer tube and having a space and a first hole defined therein; and

an indicating block having an indicator securely and tightly received within said space of said seat, an adjuster integrally formed with said indicator and movably received within said slot of said outer tube and a threaded rod integrally formed with said indicator and threadingly connected with said adjusting knob.

5,699,949

HEAVY DUTY FORWARD ACTING STAPLING MACHINE

Joel Steven Marks, Los Angeles, Calif., assignor to WorkTools, Inc., Chatsworth, Calif.

Filed Aug. 9, 1996, Ser. No. 695,009

Int. Cl.⁶ B25C *5/06*

U.S. Cl. 227—132 **14 Claims**

1. A fastening device comprising:

a housing body to support and guide functional components;

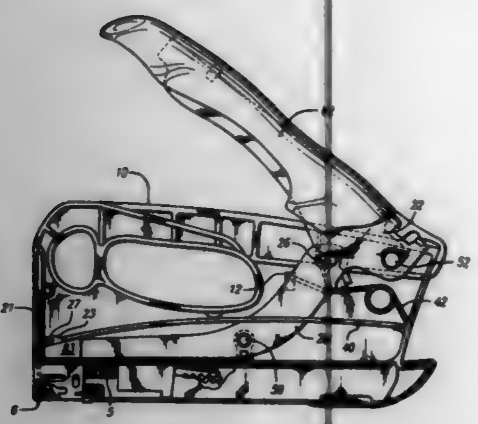

a fastener guide section attached to the housing near a bottom thereof, to guide fasteners toward a front of the housing;
a plunger located toward the front of the housing, the plunger oriented to expel fasteners in the fastener guide section out of the fastening device, the plunger further having attached a tab extending in a rearward direction;
said tab having first and second side edges, a bottom face of the tab angled at least in part between the first and second edge so that the first edge is in a lower position than the second edge;
a spring linked to the plunger, oriented to force the plunger toward the bottom of the housing;
a first surface of an actuating lever engaging the angled bottom face;
a second surface of the actuating lever engaging a third sideways facing edge of the plunger, the angled surface of the bottom face causing the second surface of the actuating lever to press the third edge when the actuating lever is pressed upward against the plunger tab;
said actuating lever pivotally attached to the housing body so that, as a front end of the actuating lever is rotated upward, the front end rotates along an arc within the housing body and slides rearward in contact with the tab as the plunger moves upward within the housing body;
the actuating lever further mounted within the housing body so that the front end is free to move from side to side;
in an uppermost position of the plunger, the second surface of the actuating lever is moved immediately rearward of the third sideways facing edge and ceases to engage the third edge;
said first surface of the actuating lever instantly slidably disengaging the angled bottom face of the tab by moving in a direction from the first side edge to past the second side edge.

5,699,950
ULTRASONIC VIBRATION WELDER
Deok hwan Jang, Suwon, Rep. of Korea, assignor to Samsung Electronics Co., Ltd, Suwon, Rep. of Korea
Filed Nov. 9, 1995, Ser. No. 554,913
Claims priority, application Rep. of Korea, Nov. 9, 1994, 94 29267
Int. Cl.⁶ B23K *21/02*
U.S. Cl. 228—1.1 **40 Claims**

1. A welder using an ultrasonic vibration, comprising:

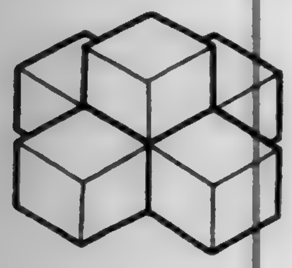

an oscillator for generating an electrical frequency;
a vibrator for converting the generated frequency into a mechanical vibration;
a vibration-amplifying member for amplifying the vibration generated by said vibrator over a predetermined amplitude;
more than one vibration-transmitting member for receiving the amplified vibration from said vibration-amplifying member;
pressure apparatus for applying pressure in one direction to said vibration-transmitting members;
a tool tip provided on a first end of each of said vibration-transmitting members in a direction to which pressure is applied;
an anvil provided to correspond to said tool tip;
a supporting member for supporting said anvil, and
a vibration direction convening means for converting the vibration direction from said vibration-amplifying member and transmitting the vibration to said vibration-transmitting members, said vibration direction converting means being located between a second end of said each vibration-transmitting member and one end of said vibration-amplifying member;
wherein said vibration-transmitting members and said vibration-amplifying member are vertically positioned in parallel.

5,699,951
WIRE BONDER AND A BONDING TOOL AND BONDING ARM
Hideaki Miyoshi, Tokyo, Japan, assignor to Kaijo Corporation, Tokyo, Japan
Filed Dec. 22, 1995, Ser. No. 577,157
Claims priority, application Japan, Dec. 28, 1994, 6-338361
Int. Cl.⁶ H01L *21/60*
U.S. Cl. 228—4.5 **12 Claims**

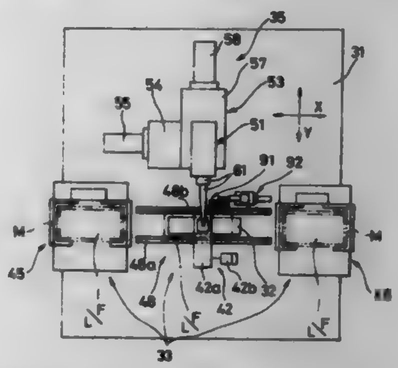

1. A wire bonder comprising:
a positioning device for positioning a bonding tool at a location corresponding to the bonding site of the bonding object by two-dimensionally moving a bonding arm on which said bonding tool is mounted;
an arm driving device for driving said bonding arm to bring said bonding tool close to said bonding site; and
a tool replacement device that maintains a stock of a plurality of new bonding tools, removes said bonding tool mounted on said bonding arm, and installs said new bonding tools.

5,699,952
AUTOMATED FUSION BONDING APPARATUS
John William Fix, Jr., Palm City, Fla., assignor to The Fusion Bonding Corporation, Palm City, Fla.
Filed Jun. 6, 1995, Ser. No. 470,257
Int. Cl.⁶ B23K *20/12*
U.S. Cl. 228—102 **47 Claims**

1. A method of fusion bonding a rotatable workpiece to a stationary workpiece comprising the steps of:
providing an integrated drive-pressure mechanism;
providing a passive fusion bonding mechanism comprising an external housing, said passive fusion bonding mechanism coupled to said drive-pressure mechanism;

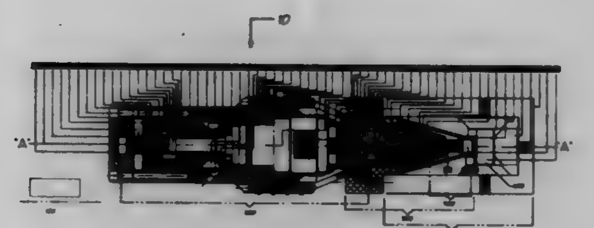

providing a support assembly comprising a clamping mechanism;
securing said stationary workpiece to said clamping mechanism in a fixed, non-rotating relationship relative to said rotatable workpiece;
securing said rotatable workpiece to said passive fusion bonding mechanism;
placing said rotatable workpiece in a contacting pressure relationship relative to said stationary workpiece;
maintaining said rotatable workpiece and said stationary workpiece in a relative axial orientation;
providing a source of pressurized fluid energy to said drive-pressure mechanism;
rotating said rotatable workpiece relative to said stationary workpiece, thereby inducing a burn-off phase and an upset phase;
increasing the axial contacting force between said rotatable workpiece and said stationary workpiece to a maximum pressure permitted by a fluid supply source pressure;
completing the fusion bonding process, thereby terminating rotation of said rotatable workpiece relative to said stationary workpiece;
maintaining the axial contacting force between said rotatable workpiece and said stationary workpiece at a rotation termination pressure, until released either manually or automatically after a forging cool-down time sufficient to fuse said rotatable workpiece to said stationary workpiece; and
removing said drive-pressure mechanism from said passive fusion bonding mechanism, thereby permitting removal of said clamping mechanism.

5,699,953
MULTI RESONANCE UNIBODY ULTRASONIC TRANSDUCER
Ali Reza Safabakhsh, Yardley, Pa., assignor to Kulicke and Soffa Investments, Inc., Wilmington, Del.
Division of Ser. No. 349,251, Dec. 5, 1994, Pat. No. 5,578,888. This application May 28, 1996, Ser. No. 654,256
Int. Cl.⁶ H01L *21/607*
U.S. Cl. 228—110.1 **12 Claims**

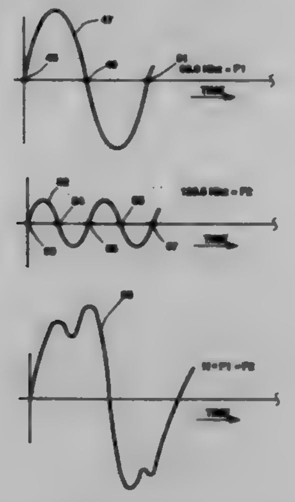

1. The method of making fine wire interconnections, comprising the steps of:
providing a multi-frequency ultrasonic transducer of the type having a plurality of resonance frequencies,
providing a multi-frequency ultrasonic generator coupled to said ultrasonic transducer, and
providing a controller for selecting one or more of the plurality of resonance frequencies produced by ultrasonic generator, and
coupling different ones of said plurality of resonance frequencies to said multi-frequency ultrasonic transducer during a wire bonding operation.

5,699,954
DEVICE FOR SECURING AN ELECTRONIC COMPONENT TO A PIN GRID ARRAY SOCKET
James S. Bell, Cedar Park, Tex., assignor to Dell U.S.A., L.P., Austin, Tex.
Division of Ser. No. 504,812, Jul. 20, 1995, abandoned. This application Dec. 12, 1996, Ser. No. 763,932
Int. Cl.⁶ H05K *3/34*
U.S. Cl. 228—180.1 **7 Claims**

1. A method for securing electrical components to a circuit board

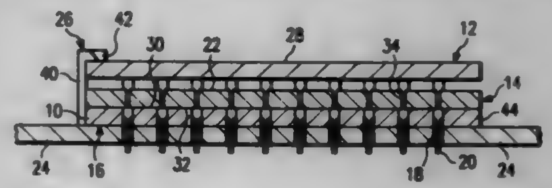

having a plurality of securing openings therethrough, the method steps comprising:
placing a base member on said circuit board in a manner to register a plurality of conductor pin apertures formed through said base member with said plurality of securing openings;
registering and inserting a plurality of conductor pins projecting outwardly from a pin grid array (PGA) socket through said plurality of conductor pin apertures and said plurality of securing openings and sandwiching said base member between and anchoring said base member to said circuit board and said PGA socket; and
soldering said PGA socket to said circuit board.

5,699,955
METHOD OF BONDING TI-ALLOY MEMBERS
Takao Shimizu, Nagoya, and Hirotsugu Horio, Tokai, both of Japan, assignors to Daido Steel Co., Ltd., Nagoya, Japan
Filed May 8, 1996, Ser. No. 646,483
Claims priority, application Japan, Aug. 30, 1995, 7-222333
Int. Cl.⁶ B23K *13/01*
U.S. Cl. 228—194 **25 Claims**

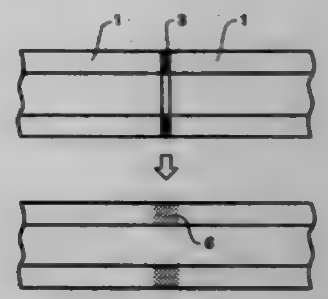

1. A method of bonding Ti-alloy members comprising: butting two Ti-alloy members to be bonded with insertion of a Ti-sheet of thickness 500 μm or less between the butted faces of the members; heating the butted faces to a high temperature near but lower than the transformation temperature of the Ti-alloy, in a non-oxidizing

atmosphere, while applying pressure of 5 MPa or higher to the butted faces; and holding the members for a period of 3 minutes or longer.

5,699,956
MAGNETIC POST CARD AND METHOD OF MANUFACTURING THE SAME
William James Brennan, 59-569B Ke Iki Rd., Haleiwa, Hi. 96712
Filed Jan. 25, 1996, Ser. No. 590,367
Int. Cl.⁶ B65D *27/00*
U.S. Cl. 229—92.8 **4 Claims**

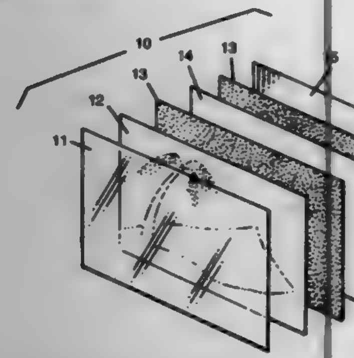

1. A novelty post card comprising:
a. a first flat rectangular sheet-form material of post card sized dimensions, having an image fixed on its obverse face;
b. a flat sheet of magnetic material attached by a first adhesive means to the reverse side of said first flat rectangular sheet-form material;
c. a second flat rectangular sheet-form material of post card sized dimensions, adapted to accept print or correspondence on its reverse face, attached by a second adhesive means to the reverse side of said magnetic material.

5,699,957
MULTIPLE COMPARTMENT SEPARABLE CONTAINER
Patrick Blin; Jean-Yves Daniel, and Alain Saulas, all of Chateauroux, France, assignors to The Mead Corporation, Dayton, Ohio
PCT No. PCT/US94/04200, § 371 Date Apr. 19, 1996, § 102(e) Date Apr. 19, 1996, PCT Pub. No. WO94/24005, PCT Pub. Date Oct. 27, 1994
PCT Filed Apr. 15, 1994, Ser. No. 535,283
Claims priority, application United Kingdom, Apr. 21, 1993, 9308518
Int. Cl.⁶ B65D *5/46*
U.S. Cl. 229—117.12 **10 Claims**

1. A multi-compartment container for packaging a plurality of articles, comprising at least two compartment units and a frangible connecting portion, each of said compartment units comprising a base panel, opposed side panels, opposed end panels and a top panel, wherein certain adjacent panels of said compartment units partly provide said frangible connecting portion so that removal of said connecting portion causes at least partial separation of said units and provides access for removal of the articles contained in said units, wherein upon removal of said connecting portion at least part of each of said panels of said each compartment unit remains intact, wherein said adjacent panels are top panels of respective ones of said units and said connecting portion is a cover portion of the container which bridges said units, and wherein said cover portion comprises a handle for carrying said formed container.

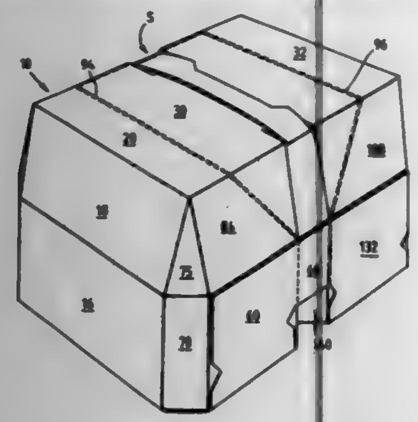

5,699,958
CARTON FLAP RETENTION ARRANGEMENT
Karl Kohler, Bartlett, Ill., assignor to Jefferson Smurfit Corporation, Clayton, Mo.
Filed Sep. 16, 1996, Ser. No. 714,597
Int. Cl.⁶ B65D *5/49*
U.S. Cl. 229—120.37 **20 Claims**

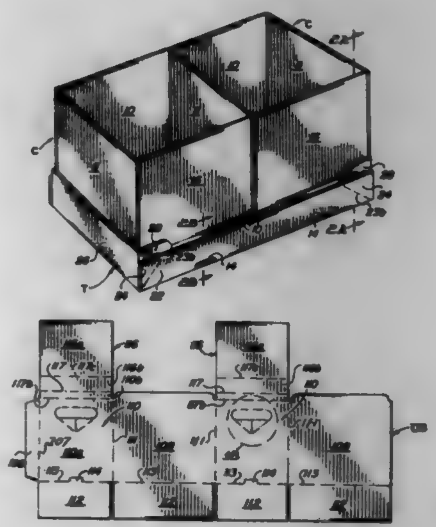

1. A combination of a pair of carton members and one tray member adapted to hold the carton members in place on a packaging line conveyor while the carton members are being filled, said carton and tray members each being formed from a unitary sheet of foldable sheet material, such as paperboard, comprising:
(a) said tray member including a generally rectangular bottom wall with opposed pairs of side and end wall panels foldably joined to each other and to opposed side and end edges of said bottom wall and upstanding therefrom;
(b) said carton members each including:
(i) a bottom wall with opposed pairs of side and end wall panels foldably joined to each other and to opposed side and end edges of said bottom wall and upstanding therefrom;
(ii) a pair of upper closure flaps foldably joined to upper portions of said carton end wall panels;
(c) each of said carton members having substantially the same length as the width of said tray member to allow said carton members to be positioned side by side in said tray member with said carton member end wall panels abutting said tray member side wall panels and with one side wall panel of each of said carton members abutting an adjacent one of said tray member end wall panels;
(d) one of said members including means for maintaining said carton member upper closure flaps in an open position against said carton side wall panels while said carton is being filled.

5,699,959
CONTAINER WITH INTERLOCKING LID
John A. Huspeka, Mississauga, and Peter L. Calcagni, Burlington, both of Canada, assignors to Dover Industries Limited, Ontario, Canada
Filed Sep. 25, 1996, Ser. No. 719,495
Int. Cl.⁶ B65D *43/10*
U.S. Cl. 229—125.26 **17 Claims**

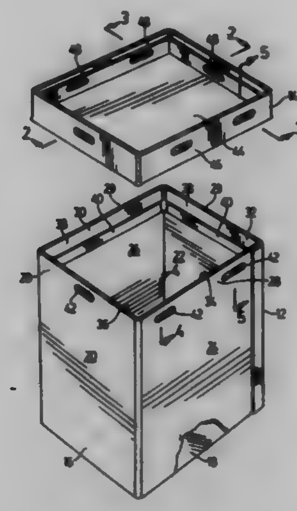

1. An interlocking container and lid, comprising:
a tubular container having a peripheral sidewall and a bottom closure; the sidewall including an upper peripheral edge portion having at least two opposed interlocking areas; folded-back flaps connected to the upper peripheral edge portion extending over the interlocking areas, the flaps including an upper wall portion spaced from the sidewall and a lower wall portion adhesively attached to the sidewall, means defining an opening in one of said upper wall portion and the upper peripheral edge portion in each of the opposed interlocking areas; and a container lid haying a top member and a peripheral flange adapted to telescopically engage the container sidewall upper peripheral edge portion, the peripheral flange including opposed projections adapted to pass through said openings to retain the lid on the container.

5,699,960
AIR CONDITIONER FOR A VEHICLE
Yasushi Kato; Goro Uchida, both of Toyota, and Yukio Uemura, Kariya, all of Japan, assignors to Nippondenso Co., Ltd., Kariya, and Toyota Jidosha Kabushiki Kaisha, Toyota, both of Japan
Filed Mar. 19, 1996, Ser. No. 616,496
Claims priority, application Japan, Mar. 20, 1995, 7-061003; Mar. 1, 1996, 8-044769
Int. Cl.⁶ G05D *23/00*
U.S. Cl. 237—2 A **28 Claims**

1. An air conditioner for a vehicle in which an interior of a duct is partitioned into a first passage, which is communicable with outside air, and a second passage, which is communicable with inside air, and at least one blower fan driven by a single motor is provided in the first passage and the second passage, said air conditioner comprising:
a bypass duct provided at the second passage and guiding the outside air; and
an inside/outside air switching member provided at an inside air suction opening of the second passage,
wherein in a state in which backflow of the outside air through the inside air suction opening into a vehicle interior will occur, said inside/outside air switching member is switched to an outside air introduction side so as to close the inside air suction opening.

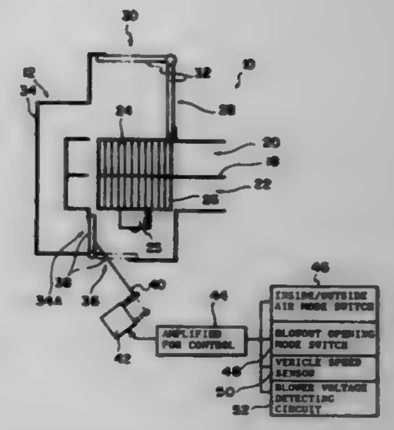

5,699,961
FANLESS SNOW GUN
H. Ronald Ratnik, Pittsford, and Timothy C. Y. Wang, Rochester, both of N.Y., assignors to Ratnik Industries, Inc., Victor, N.Y.
Filed May 5, 1995, Ser. No. 435,468
Int. Cl.⁶ F25C *3/04*
U.S. Cl. 239—14.2 **20 Claims**

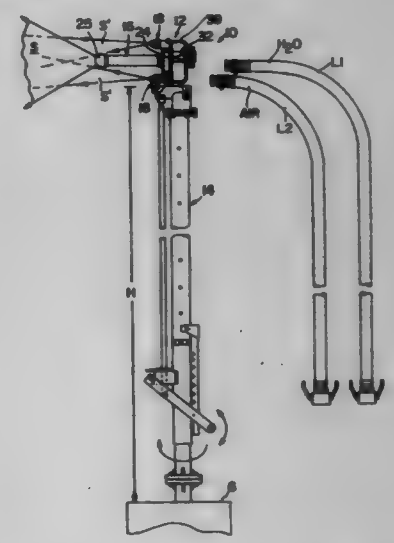

1. A fanless snow-making apparatus comprising:
(a) water projecting means for projecting a spray of water particles into the air, each of said particles having a size not substantially greater than 300 microns;
(b) nucleating means for injecting ice particles into said spray, said ice particles serving as nucleation centers about which said water particles freeze and form ice crystals, said nucleating means comprising a housing for mixing compressed air and water to produce said ice particles, said nucleating means consuming between about 1 and 10 percent of the water consumed by said water protecting means; and
(c) a tower for supporting said water projecting and nucleating means at an altitude sufficient to enable said water particles to be converted to ice crystals while falling under the influence of gravity.

5,699,962
AUTOMATIC ENGAGEMENT NOZZLE
Loren W. Scott, Carlsbad, and Kurt Kulberg, La Jolla, both of Calif., assignors to Hunter Industries, Inc., San Marcos, Calif.
Continuation-in-part of Ser. No. 178,496, Jan. 7, 1994, Pat. No. 5,456,411. This application Oct. 6, 1995, Ser. No. 540,246
Int. Cl.^{6} B05B *1/02*
U.S. Cl. 239—73 **20 Claims**

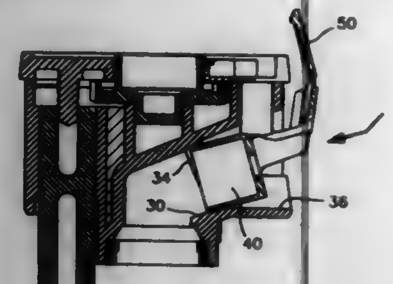

1. A sprinkler unit having a system of nozzles for a wide range of conditions, the sprinkler unit comprising:
a housing having an inlet for connecting to a source of water, an outlet, passage means connecting said inlet to said outlet, said outlet having means defining a nozzle receiving socket having an axis;
a nozzle for detachably mounting in said outlet for distributing a stream of water outward from said housing;
latching means in said nozzle receiving socket for latching engagement with said nozzle; and
biasing means in said socket for biasing said nozzle and forcing it to tilt relative to said axis into latching engagement with said latching means for retaining said nozzle in said socket.

5,699,963
ELECTROMAGNETIC VALVE AND UNIT-TYPE FUEL INJECTION DEVICE USING THE SAME
Atsushi Ueda, Higashimatsuyama, Japan, assignor to Zexel Corporation, Tokyo, Japan
Filed Jun. 23, 1995, Ser. No. 494,266
Claims priority, application Japan, Jul. 6, 1994, 6-177493
Int. Cl.^{6} F02M *51/00*
U.S. Cl. 239—88 **15 Claims**

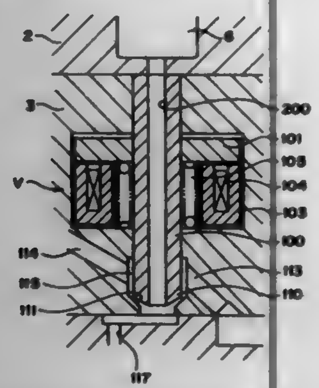

1. An electromagnetic valve including:
a fluid reservoir through which a fluid supply hole and a fluid return hole intercommunicate with each other; and
a valve plug which is provided in said fluid reservoir and serves to block intercommunication between said fluid reservoir and a first chamber, wherein said valve plug is provided with an intercommunication hole therein through which said first chamber and a second chamber intercommunicate with each other when said valve plug blocks the intercommunication between said fluid reservoir and said first chamber.

5,699,964
SHOWERHEAD AND BOTTOM PORTION THEREOF
Konrad Bergmann, Schweich, Germany; Claudio Falt, Mailand, Italy, and Klaus-Jürgen Läller, Meckenheim, Germany, assignors to Ideal-Standard GmbH, Bonn, Germany
Filed Aug. 13, 1996, Ser. No. 700,566
Int. Cl.^{6} B05B *1/00;15/00;15/02*
U.S. Cl. 239—106 **37 Claims**

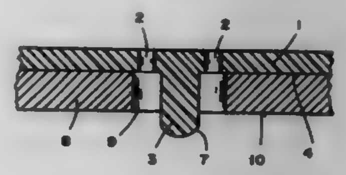

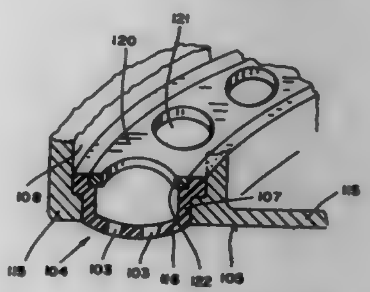

1. A bottom portion for a showerhead, said bottom portion comprising an elastic material and including at least one water passage opening and at least one projection joined to said bottom portion, said at least one projection extending beyond an outermost surface of said bottom portion and aligned with at least one water passage opening, wherein said at least one projection corresponds to at least one water passage opening such that an outer surface of said projection extends continuously through an inner surface of said water passage opening.

5,699,965
INFRARED SUPPRESSOR FOR A GAS TURBINE ENGINE
Armand F. Amelio, Yonkers, N.Y., assignor to Sikorsky Aircraft Corporation, Stratford, Conn.
Filed Jun. 30, 1989, Ser. No. 374,025
Int. Cl.^{6} F02K *1/46*
U.S. Cl. 239—127.3 **6 Claims**

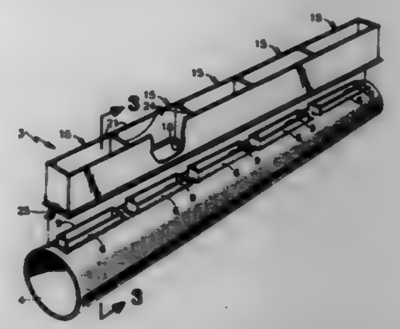

1. In an infrared suppressor for the exhaust of a gas turbine engine, said suppressor comprising an elongated tapered exhaust manifold, said manifold having an inlet for receiving said exhaust and a plurality of spaced apart manifold nozzles in fluid communication with said manifold, said nozzles substantially aligned along the manifold for dispersing said exhaust, the improvement characterized by:
a) each nozzle having an elongated opening, each opening being longitudinally aligned with said manifold and each nozzle having a substantially unobstructed exhaust flowpath to the ambient air;

b) a plurality of mixing ducts, each mixing duct having sidewalls, an upstream orifice and a downstream orifice, said upstream and downstream orifices being open to the ambient air; and
c) said manifold nozzles extending within but spaced apart from said mixing ducts.

5,699,966
EXHAUST NOZZLE OF A GAS TURBINE ENGINE
Allan D. Beverage, Cincinnati, Ohio, assignor to General Electric Company, Cincinnati, Ohio
Filed Mar. 31, 1980, Ser. No. 136,014
Int. Cl.^{6} F02K *1/42*
U.S. Cl. 239—265.19 **16 Claims**

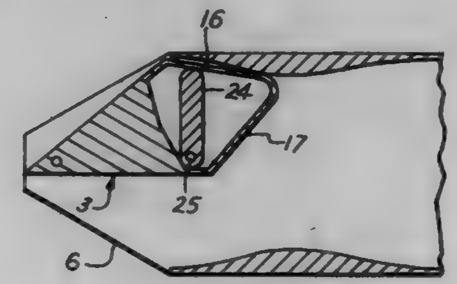

1. An exhaust nozzle for a gas turbine engine comprising:
a) an exhaust cowl having a generally rectangular exhaust opening defined by upper and lower walls and opposed spaced side fairings;
b) a plug including a forward end portion and an aft end portion, said plug being spaced between said upper and lower walls of said cowl and extending transversely across the width thereof for dividing said exhaust opening into an upper exhaust opening and a lower exhaust opening, said plug being pivotable about a transverse axis passing through said aft end portion thereof and between an upper position wherein said forward end portion thereof is adjacent said upper wall for substantially closing said upper exhaust opening and increasing said lower exhaust opening and a lower position wherein said forward end portion is adjacent said lower wall for substantially closing said lower exhaust opening and increasing said upper exhaust opening; and
c) means effective for pivoting said plug.

5,699,967
AIRLESS SPRAY GUN DIFFUSER
Roger Conatser, Franklin, and Victor R. Jarboe, Lebanon, both of Tenn., assignors to Campbell Hausfeld/Scott Fetzer Co., Westlake, Ohio
Filed Aug. 25, 1995, Ser. No. 519,631
Int. Cl.^{6} B05B *9/01;1/32*
U.S. Cl. 239—526 **19 Claims**

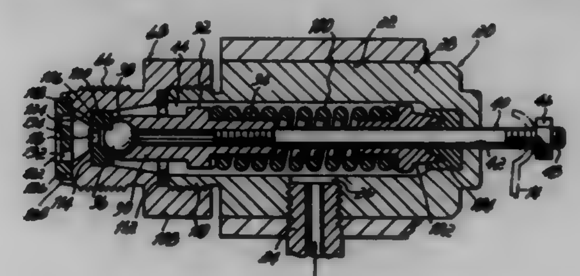

1. In an airless fluid spray gun having a fluid valve and a removable spray orifice for atomizing fluid in a spray pattern:
a restricting orifice downstream of said valve; and
a diffuser having at least one fluid flow area therethrough downstream of said restricting orifice;
said restricting orifice and said diffuser producing in combination a fluid flow immediately downstream of said diffuser, when said spray orifice is removed from said gun, said fluid flow having a velocity of less than about 70 feet per second.

5,699,968
WATER DISCHARGE CONTROLLING STRUCTURE OF A SPRINKLING GUN
Tsang-Chung Hung, Changhua Hsien, Taiwan, assignor to Ruen Ryh Enterprise Co., Ltd., Changhua, Taiwan
Filed Mar. 13, 1996, Ser. No. 614,700
Int. Cl.^{6} B05B *7/02*
U.S. Cl. 239—526 **1 Claim**

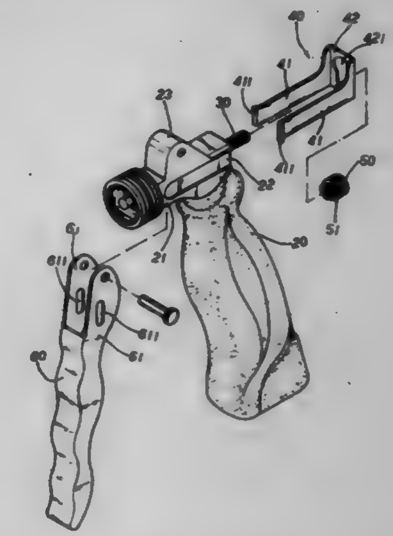

1. A water discharge controlling structure of a sprinkling gun, in which a controlling bolt is slidably disposed in a barrel of the sprinkling gun and a nut with narrowed neck portion is screwed with a rear end of the controlling bolt, said controlling structure being characterized in that:
the barrel has a rear end formed with two lateral axial shallow channels and two lateral arms of the U-shaped pushing plate are slidably received in the shallow channels, the pushing plate having a middle bridge portion formed with a key hole-shaped driving hole through which the controlling bolt is passed, the narrowed neck portion of the nut being chucked in the driving hole of the pushing plate, each lateral arm having a free end formed with an outward bent engaging plate, a pivot seat being disposed on upper face of the barrel for pivotally connecting with two upward extending lugs of the trigger, each lug being formed with an engaging slot for the engaging plate of the lateral arm of the pushing plate to engage therein, whereby when operated, the trigger is pulled to urge the pushing plate to slide back and forth along the axial shallow channels of the barrel and a peripheral wall of the driving hole of the pushing plate drives the nut so as to slide the controlling bolt back and forth within the barrel for controlling the water flow.

5,699,969
METHOD AND SYSTEM FOR RECLAIMING AGGREGATE FROM CONCRETE WASTE MATERIAL
Kazutoshi Isaji, Nagoya, Japan, assignor to Shinwa Plant Kikou Co., Ltd., Nagoya; Kawasaki Jukogyo Kabushiki Kaisha, Chuo-ku; Rasa Industries Ltd., Tokyo, and Kyoboshi Co., Ltd., Osaka, all of Japan
Filed Jan. 11, 1996, Ser. No. 586,463
Claims priority, application Japan, Jan. 10, 1995, 7-018615; Dec. 28, 1995, 7-352833
Int. Cl.[6] B02C *19/00*
U.S. Cl. 241—24.12 **7 Claims**

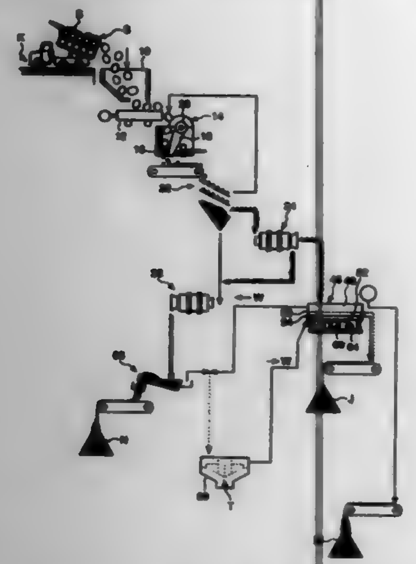

1. A method for reclaiming aggregate from concrete waste material comprising:
a crushing step of compression-crushing lumps of said concrete waste material into a crushed mixture, and sorting said crushed mixture by size thereof;
at least one grinding step of rotating said crushed mixture sorted to grind said crushed mixture, thereby peeling mortar from aggregate included in said crushed mixture to obtain a mixture of aggregate and mortar and sorting said mixture of aggregate and mortar into a mixture of gravel, crushed stones and mortar and a mixture of sand, cement and mortar; and
a product separating step of separating said mixture of gravel, crushed stones and mortar and said mixture of sand, cement and mortar into products including gravel and crushed stones, sand, cement, and mortar.

5,699,970
MEAT-COMMINUTING MACHINE WITH IMPROVED VACUUM DISCHARGE MECHANISM
Vladan Mihailovic, Chicago, Ill., assignor to 2 M Tool Co., Inc., Chicago, Ill.
Filed Jul. 11, 1996, Ser. No. 678,175
Int. Cl.[6] B02C *13/02*
U.S. Cl. 241—82.5 **8 Claims**

8. In a meat-comminuting machine comprising a discharge mechanism, which comprises
(a) a housing structure defining a discharge chamber adapted to receive meat comminuted by the meat-comminuting machine, through a front mouth of the discharge chamber, the housing structure defining a back wall of the discharge chamber and a cylindrical wall of the discharge chamber, the cylindrical wall defining an axis and having an outlet, and
(b) means including a discharge rotor arranged to be rotatably driven in the discharge chamber, about the axis defined by the cylindrical wall, for discharging the comminuted meat from the discharge chamber, through the outlet of the cylindrical wall, via centrifugal force, the discharge rotor having a hub

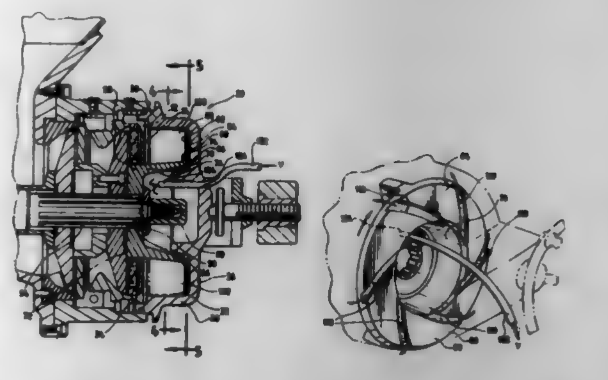

extending axially along the axis defined by the cylindrical wall, the hub having a front end and a back end, the discharge rotor having an annular flange extending radially from the back end of the hub, the annular flange having a front face, a back face, an inner, circumferential edge, and an outer, circumferential edge, which is close to but spaced by a circumferential gap from the circumferential wall, the discharge rotor having fins extending radially from the hub to the outer, circumferential edge of the annular flange, and axially from the front face of the annular flange, toward the front end of the hub,
an improvement wherein the hub has a hollow portion, which opens backwardly toward the back wall of the discharge chamber, and wherein the discharge mechanism is equipped with means including a tube extending into the discharge chamber, through a hole in the back wall of the discharge chamber, into the hollow portion of the hub for drawing a partial vacuum within the discharge chamber.

5,699,971
METHOD OF, AND DEVICE FOR, DETECTING THE YARN END ON A BOBBIN
Zdeněk Špindler, B. Němcové ; Vojtěch Novotný , Dukelské , and Petr Semrád, Eduarda Beneše, all of Czech Rep., assignors to Rieter Elitex a.s., Czech Rep.
Filed Mar. 14, 1996, Ser. No. 615,389
Claims priority, application Czech Rep., Mar. 14, 1995, 660-95
Int. Cl.[6] B65H *69/04;* **D01H** *13/04*
U.S. Cl. 242—35.6 E **16 Claims**

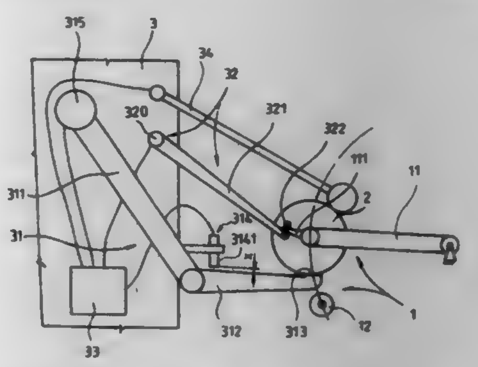

1. A method for detecting a yarn end on a bobbin having a central tube and supported in a winding device of an operating unit of a textile machine, wherein the textile machine comprises a plurality of operating units situated next to each other and comprises an attending device which attends to a selected operating unit at which there is a yarn interruption, and the attending device is fitted with a detection device provided with a detecting nozzle having a yarn sucking mouth, the method comprising:
displacing the detecting device over the textile machine and into a detecting position;

moving the mouth of the detecting nozzle to lie in the path of possible motion of the central tube of the bobbin;
moving the bobbin in one direction toward the mouth of the nozzle, such that when the bobbin mounted in the winding device moves toward the mouth of the detecting nozzle which is in the detecting position, and when the circumference of the bobbin comes to lie on the mouth, the bobbin moves against the mouth of the nozzle, the mouth of the nozzle is moved along with the bobbin in the direction of the motion of the bobbin;
upon contact between the bobbin and the mouth of the nozzle, stopping the movement of the bobbin in the one direction and moving the bobbin in the reverse direction wherein the mouth of the nozzle is remaining in contact with the circumference of the bobbin until the mouth of the nozzle has returned to the detecting position;
then stopping the reverse direction motion of the nozzle which is moving along with the return of the bobbin while reverse motion of the bobbin continues;
monitoring the moment of the end of the contact between the bobbin circumference and the mouth of the nozzle;
then moving the bobbin away from the mouth of the nozzle for a predetermined time interval, for thereby assuring there is a constant distance between the circumference of the bobbin and the mouth of the detecting nozzle regardless of the winding diameter of the yarn on the bobbin.

5,699,972
MAGNETIC TAPE APPARATUS FOR ELIMINATING A SLACK OF MAGNETIC TAPE WHEN CHANGING A TAPE WINDING DIRECTION
Ikuichiro Nawa, Atsugi, Japan, assignor to Mitsumi Electric Co., Ltd., Tokyo, Japan
Filed Jun. 26, 1996, Ser. No. 671,394
Claims priority, application Japan, Jun. 29, 1995, 7-164239
Int. Cl.[6] G11B *15/43*
U.S. Cl. 242—334 **8 Claims**

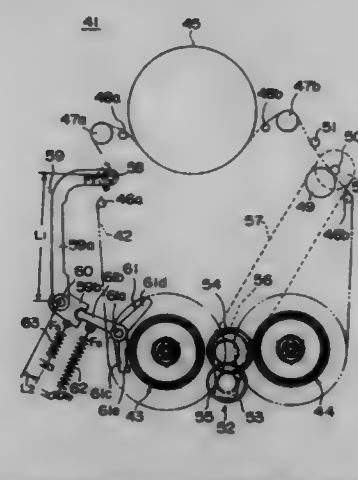

1. A magnetic tape apparatus in which data is recorded on or reproduced from a magnetic tape when the magnetic tape is run on a rotary drum, said apparatus comprising:
a tension regulating unit regulating a tension of the magnetic tape when the magnetic tape is run, said tension regulating unit pressing the magnetic tape at a first position in a tension-applying direction; and
a slack preventing unit, associated with said tension regulating unit, exerting a rotating force on said tension regulating unit at a second position such that said rotating force exerted at the second position acts on said tension regulating unit at the first position to further press the magnetic tape in the tension-applying direction, thus preventing a slack of the magnetic tape from being produced when changing a tape winding direction of the magnetic tape.

5,699,973
TAPE REEL HAVING AIR DISCHARGING GROOVES FORMED IN FLANGE
Takanobu Nakane, and Kiyoo Morita, both of Kanagawa, Japan, assignors to Fuji Photo Film Co., LTD., Kanagawa, Japan
Continuation of Ser. No. 420,607, Apr. 12, 1995, abandoned. This application Apr. 21, 1997, Ser. No. 844,623
Claims priority, application Japan, Apr. 20, 1994, U.M.HEI.6-005443 U
Int. Cl.[6] G11B *23/087;* **B65H** *75/00*
U.S. Cl. 242—345 **14 Claims**

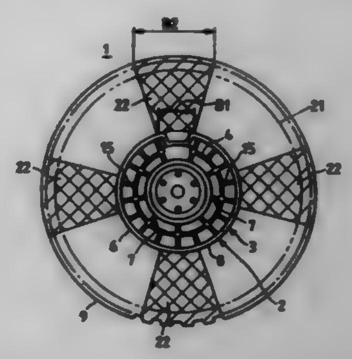

1. A tape reel having a cylindrical tape winding face on which magnetic tape is to be wound, and upper and lower flanges formed at respective upper and lower axial ends of said tape winding face, each of said upper and lower flanges having an inner periphery proximate to said tape winding face and an outer periphery positioned radially apart from said tape winding face, said tape reel further comprising:
at least one groove disposed in an inner surface of said lower flange, the at least one groove extending radially from said inner periphery to said outer periphery, the at least one groove having a fan-shape with imaginary lines which extend from an innermost portion of sides of the at least one groove so as to intersect at the center of said lower flange, the inner surface being contacted by the magnetic tape so that air interposed in between parts of the magnetic tape wound on said tape winding face is discharged through said at least one groove to the outer periphery of said lower flange; and an opening area of said at least one groove on said inner surface being within a range where the magnetic tape is wound on said inner surface and being not less than 30 percent of an area of the range where the magnetic tape is wound, wherein said at least one groove includes upper end edges which are rounded.

5,699,974
FIBRE COILING
Peter D. Jenkins, Woodbridge, and Paul F. Wettengel, Ipswich, both of England, assignors to British Telecommunications public limited company, London, England
Division of Ser. No. 313,601, Sep. 29, 1994, Pat. No. 5,575,455, which is a division of Ser. No. 111,734, Aug. 25, 1993, Pat. No. 5,374,005, which is a continuation of Ser. No. 534,300, Jun. 7, 1990, abandoned, which is a continuation of Ser. No. 319,003, Feb. 17, 1989, abandoned. This application Aug. 28, 1996, Ser. No. 704,371
Claims priority, application United Kingdom, Jun. 22, 1987, 8714578
Int. Cl.[6] B65H *51/00*
U.S. Cl. 242—361.4 **3 Claims**

1. A method for storing and recovering an optical fiber member in a wound coil in an annular container, the container comprising inner and outer sidewalls attached to a bottom wall, and a cap member on the container over the inner and outer sidewalls, said cap member having an opening through which the optical fiber member passes, said inner and outer sidewalls and bottom wall

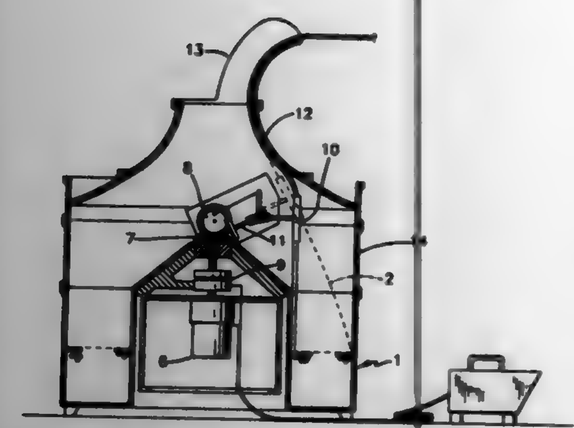

defining therebetween a storage cavity from which the optical fiber member can be efficiently unwound and blown into a duct, said method comprising:

forming and depositing loops of said coil in said storage cavity of said annular container by passing the fibre into the container through said opening in the cap member such that each loop retains substantially 360 degrees of recoverable torsion while so stored, which torsion is substantially all relieved upon being removed from the coil and blown into a duct; and

removing the fibre from said coil in order to blow the fibre into a duct as the fibre exits the container through the opening in said cap member.

5,699,975

EXTENSION MEMBER ANCHOR

Edward C. Paugh, Huntington Beach; Harley W. Leafstone, Ontario, and Nicholas P. Hortick, Pomona, all of Calif., assignors to West Coast Chain Mfg. Company, Ontario, Calif.

Filed Mar. 14, 1996, Ser. No. 615,963

Int. Cl.[6] B65H *75/48;* A44B *1/04;* B65G *3/28*

U.S. Cl. 242—371 3 Claims

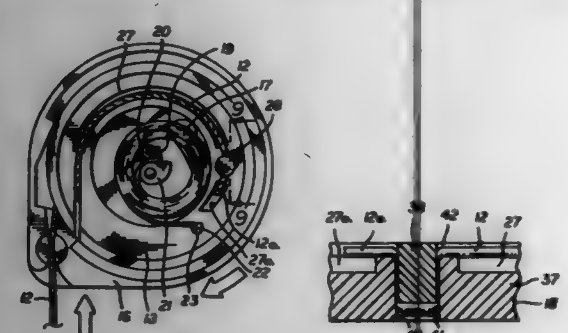

1. In a spring drive retractor having a case with an inner space for a spring and a reel, with one end of the spring connected to the case and the other end of the spring connected to the reel, and with an extension member having one end connected to the reel and the other end passing outwardly through the case,

a reel having an axis of rotation and comprising a body and a post molded as a single piece with said post projecting from said body parallel to said reel axis of rotation and in line with a transverse first opening in said body and with said post and body joined by a rupturable membrane, with said post in a first position outside said body, said post having an axis in line with said first opening, and said post having means defining an extension member receiving second opening, said first opening being dimensioned to be a push fit for said post,

with said post movable along said post axis into said body first opening from said first position into a second position inside said body rupturing said membrane and positioning said post with said second opening in said body first opening fixing the extension member in said reel.

5,699,976

GEAR MECHANISM AND PRETENSIONER

Seiji Hori, Aichi-ken, Japan, assignor to Kabushiki Kaisha Tokai-Rika-Denki-Seisakusho, Aichi-Ken, Japan

Filed Aug. 7, 1996, Ser. No. 689,242

Claims priority, application Japan, Aug. 31, 1995, 7-223733

Int. Cl.[6] B60R *22/46*

U.S. Cl. 242—374 20 Claims

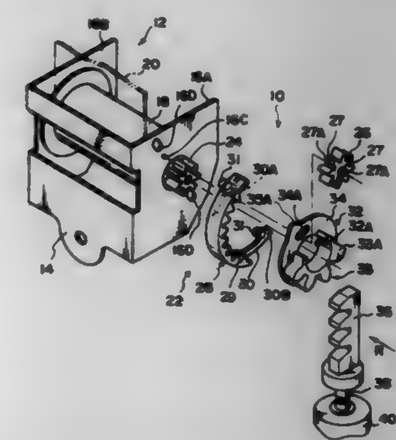

1. A gear mechanism comprising:

a sun gear;

a planetary gear which is disposed so as to continuously engage said sun gear, and which revolves around said sun gear while rotating on its own axis when said gear mechanism is operated;

an internal gear which is disposed so as to be movable in a direction perpendicular to the axis of said sun gear so as to engage said planetary gear and which is kept apart from said planetary gear when said gear mechanism is non-operated and engages said planetary gear when said gear mechanism is operated; and

a cam gear which rotatably supports said planetary gear, said cam gear moving said internal gear in a direction perpendicular to the axis of said sun gear, upon receiving an external driving force, so as to engage said internal gear with said planetary gear, and said cam gear being rotated so as to revolve said planetary gear around said sun gear.

5,699,977

COIL WINDING DEVICE AND COIL WINDING METHOD

Yasuhiro Watanabe, Tokyo, Japan, assignor to Sony Corporation, Tokyo, Japan

Filed Feb. 6, 1996, Ser. No. 597,158

Claims priority, application Japan, Feb. 23, 1995, 07-058249

Int. Cl.[6] H01J *9/236;29/76*

U.S. Cl. 242—439 7 Claims

1. A coil winding device comprising:

a bobbin rotating unit for holding and rotating a bobbin upon which a wire is to be wound;

a nozzle for feeding wire onto said bobbin;

wire clamp means for clamping a first portion of the wire fed out of said nozzle, said wire clamp means being rotated synchronously with said bobbin rotating unit;

cutting means for clamping and cutting a second portion of the wire which has been fed out of said nozzle and wound onto said bobbin; and

control means for controlling of selective motion of said nozzle in a vertical direction substantially at a right angle to a horizontal direction in parallel with an axis of said bobbin,

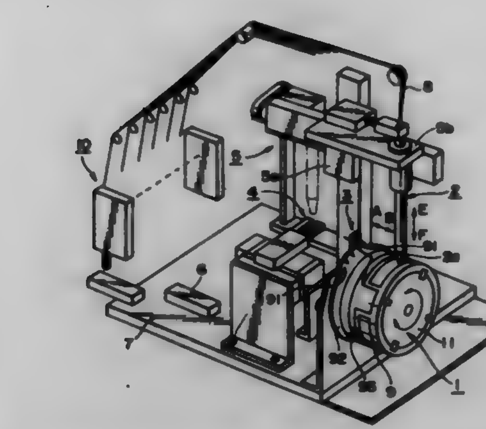

controlling a rotation of said bobbin rotating unit, controlling a clamp of said wire with said wire clamp means and controlling the clamp and cutting of said wire with said cutting means.

5,699,978

TEAR TAPE CHANGER

Yuji Hanazawa, Chiba-ken, Japan, assignor to Tokyo Automatic Machinery Works, Ltd., Tokyo, Japan

Filed Jul. 22, 1996, Ser. No. 684,053

Int. Cl.[6] B65H *19/14;21/00;23/00;19/18*

U.S. Cl. 242—552 11 Claims

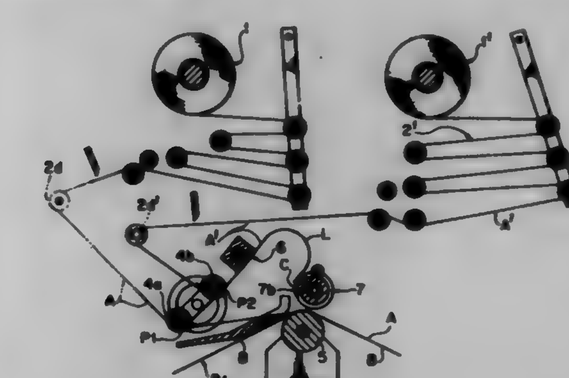

1. A tear tape changer wherein transfer paths of tapes with cutters disposed therein are formed downstream of two tape reels mounted removably, a backup roller for conducting the tape fed from one of the transfer paths and a packaging film fed along a film feed path to a downstream side in a superimposed state, and a pressure roller for removably holding a front end portion of the tape fed from the other transfer path and causing it to stand by, are disposed on downstream sides of the transfer paths, and when the tape from one of the transfer paths has been used up, the pressure roller and the backup roller are moved close to each other in accordance with a detected value of a residual amount of the tape to connect the other tape which is standing by to the one tape, thus allowing the tapes to be fed to the film feed path successively in an alternate manner, said tear tape changer comprising:

guide rollers disposed at the downstream ends of the two transfer paths, respectively, the guide rollers being displaced from each other in front and rear directions orthogonal to the tape feed directions;

a pair of backup roller and pressure roller disposed on the downstream side of the two guide rollers;

a route changing roller standing by in a feed position in which the tape from the downstream end of one of the transfer paths is stretched toward the backup roller, and a route changing roller standing by in a stand-by position in which the tape from the downstream end of the other transfer path is stretched toward the pressure roller, said route changing rollers are disposed between the guide rollers and the backup and pressure rollers;

a drive unit for moving the route changing roller standing by in the stand-by position to the feed position after the tape stretched on the route changing roller has been fed to the film feed path with an approaching motion of the pressure roller and the backup roller, and for moving the route changing roller standing by in the feed position to the stand-by position; and

a relief means for moving only the route changing roller that is moving from the feed position to the stand-by position, in the rear direction orthogonal to the tape feed direction so as not to interfere with the tape which is in use.

5,699,979

MACHINE OF THE TYPE CAPABLE OF USING STRIPS OF MATERIAL WOUND IN REELS

Walter Spada, Marzabotto, and Gian Luigi Gherardi, Medicina, both of Italy, assignors to Sasib S.p.A., Bologna, Italy

Filed Oct. 10, 1995, Ser. No. 540,454

Claims priority, application Italy, Oct. 26, 1994, GE94A0119

Int. Cl.[6] B65H *19/00;75/24*

U.S. Cl. 242—559.3 15 Claims

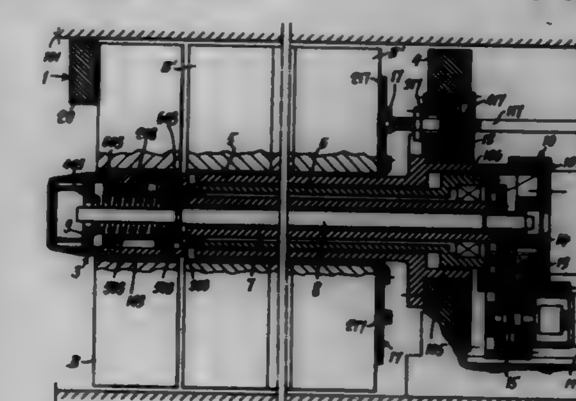

1. A machine for using strips of material wound in reels comprising:

a base;

a hollow supporting bar having a longitudinal axis, a front end and a rear end, said supporting bar having a plurality of reels stored thereon;

a bar supporting means for supporting said supporting bar relative to said base;

a tubular sleeve having a front end and a rear end;

a sleeve mounting means for mounting said tubular sleeve inside said supporting bar for axial movement in said supporting bar between an unwinding position and a transfer position;

a tubular shaft having a front end and a rear end, said front end including

a spindle on which a reel is mounted for unwinding and

a core engaging means for selectively engaging a core of the reel mounted on said spindle;

a shaft mounting means for mounting said tubular shaft inside said tubular sleeve for rotation about the longitudinal axis of said supporting bar with said spindle extending axially beyond said front end of said supporting bar coaxial with said supporting bar;

a transmission rod having a front end which engages said core engaging means for selective actuation thereof and a rear end;

a rod mounting means for mounting said transmission rod inside said tubular shaft for rotation with said tubular shaft and for axial movement relative to said tubular shaft;

a sleeve moving means connected to said rear end of said tubular sleeve for moving said tubular sleeve axially in said

supporting bar between the unwinding and transfer positions thereof together with said tubular shaft and said transmission rod such that said spindle is also moved between an unwinding position spaced from said supporting bar and a transfer position immediately adjacent said supporting bar;

a shaft rotating means carried by said rear end of said tubular sleeve and connected to said tubular shaft for rotating said tubular shaft in said tubular sleeve and hence said spindle extending beyond said supporting bar when said sleeve and hence said spindle are in the unwinding positions thereof;

a rod moving means carried by said rear end of said tubular sleeve for axially moving said transmission rod in said tubular shaft when said sleeve and hence said spindle are in the transfer positions thereof and hence for causing said core engaging means to move between an engaged position with an adjacent core and a disengaged position with the adjacent core; and

a pusher means for selectively pushing a front-most one of the reels from said supporting bar onto said spindle when said spindle is in the transfer position and said core engaging means is in the disengaged position, whereby an empty core is simultaneously moved from said core engaging means, and whereby after transfer of the front-most reel to said core engaging means said rod moving means moves said transmission rod so that said core engaging means is moved back to the engaged position and then said sleeve moving means is moved back to the unwinding position together with said spindle so that the front-most reel is then axially separated from a remainder of the reels stored on said supporting bar.

5,699,980

MACHINE FOR SPREADING FABRIC

Angel Balsells Ventura, Ctra. Nacional II Km. 551,9, 08711 Odena (Barcelona), Spain

Filed Feb. 23, 1996, Ser. No. 606,366
Claims priority, application Spain, Feb. 27, 1995, 9500375
Int. Cl.⁶ B65H *16/10;29/46*
U.S. Cl. 242—564.5 **8 Claims**

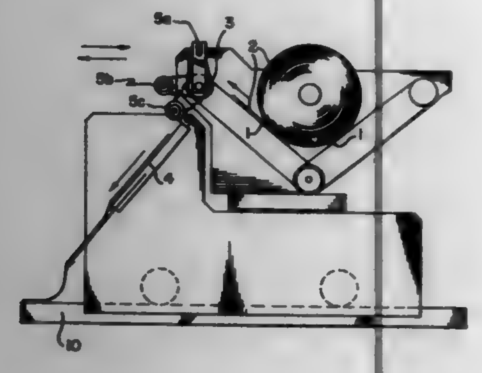

1. A machine for spreading fabric from a roll on which the fabric is wound onto a table, said machine comprising:

a plurality of belts;

a guide cylinder which guides the fabric and which facilitates the discharge of the fabric from said belts;

a plate on which the fabric slides to be guided onto the table on which the fabric is spread out; and

a separating cylinder for separating the fabric, said separating cylinder being arranged close to said guide cylinder and connected kinematically thereto for movement with respect to said guide cylinder;

wherein said separating cylinder is movable into a position in which said guide cylinder prevents the fabric from coming into contact with said feed belts in the area of discharge from said belts.

5,699,981

AIRCRAFT CAVITY ACOUSTIC RESONANCE SUPPRESSION SYSTEM

Stephen F. McGrath, Kettering, and Leonard L. Shaw, Troy, both of Ohio, assignors to The United States of America as represented by the Secretary of the Air Force, Washington, D.C.

Filed Mar. 18, 1996, Ser. No. 617,145
Int. Cl.⁶ B64C *23/06*
U.S. Cl. 244—1 N **5 Claims**

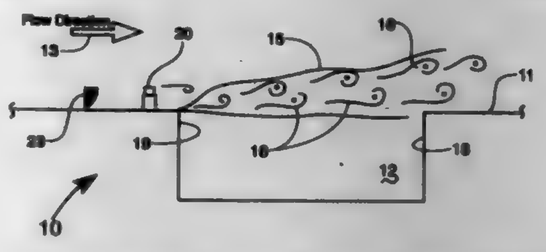

1. An aircraft cavity acoustic resonance suppression system, which comprises:

(a) a high frequency tone generator comprising a small diameter, substantially cylindrically shaped member disposed substantially parallel to and in spaced relationship with a surface of an aircraft near the leading edge of a cavity defined in said surface of said aircraft;

(b) said member being sized in length to subtend from about 75 to 100 percent of the length of said leading edge; and

(c) said member being disposed substantially transverse of the direction of airflow across said cavity;

(d) whereby, in use, said member generates vortices in said airflow across said cavity at frequencies greater than the characteristic resonant frequency of said cavity.

5,699,982

SPACECRAFT WITH HEAT DISSIPATORS MOUNTED ON THERMALLY COUPLED SHELVES

Joseph Patrick Daugherty, Trenton, N.J., assignor to Martin Marietta Corporation, East Windsor, Pa.

Filed Jul. 24, 1995, Ser. No. 506,163
Int. Cl.⁶ B64G *1/50*
U.S. Cl. 244—63 **8 Claims**

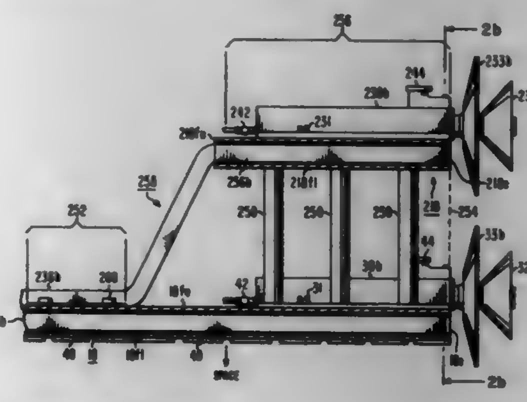

1. A spacecraft, comprising;

a first radiator panel which defines a first surface which radiates into space, and which includes at least a first elongated heat pipe thermally coupled to said first surface, said first radiator panel also defining a second surface, at least a portion of which is thermally coupled to said first heat pipe, whereby heat coupled to said first heat pipe from said second surface is transferred to said first surface and radiated into space;

a heat-dissipating first load coupled to said second surface, whereby its heat is coupled to said first heat pipe, and conveyed to said first surface of said first radiator panel, for radiation thereby;

a shelf;

shelf mounting means mechanically coupled to said shelf and to said first radiator panel, for mounting said shelf so that it extends parallel to said first radiator panel at a predetermined distance from said second surface thereof, at a location interior to said spacecraft, whereby a broad side of said shelf cannot radiate toward space;

a bent second heat pipe, including a first portion extending along, and thermally coupled to, said shelf, said heat pipe also including a second portion extending parallel to, in close proximity, and thermally coupled to, a portion of said first heat pipe, said second heat pipe also including an elongated third portion extending between said first and second portions of said second heat pipe;

a heat-dissipating second load coupled to a surface of said shelf, in thermal communication with said first portion of said second heat pipe, whereby said second heat pipe carries heat dissipated by said second load to said portion of said first heat pipe, which in turn carries said heat from said second heat pipe to said first surface of said radiator panel.

5,699,983

ATOMIZING AND MIXING NOZZLE FOR HUMIDIFICATION PROCESS

Scott P. Ellsworth, 4365 S. Maidie La., West Valley City, Utah 84119

Division of Ser. No. 110,556, Aug. 23, 1993, Pat. No. 5,524,848. This application Apr. 12, 1996, Ser. No. 630,060
Int. Cl.⁶ B01F *3/04*
U.S. Cl. 244—118.5 **6 Claims**

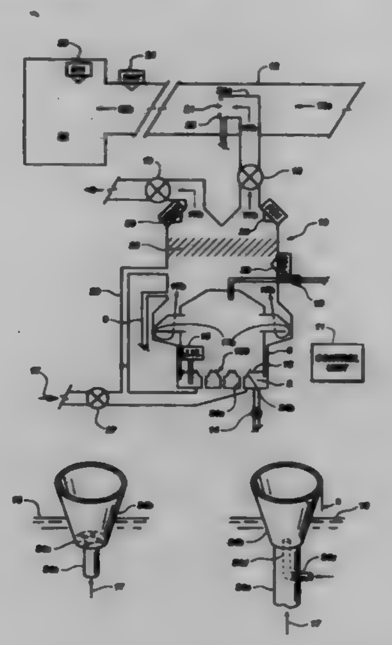

1. A method of humidifying a compartment comprising the steps of:

providing an air inlet source comprising a continuous jet of air,

entraining from a surface of a body of water water droplets into the air,

evaporating water from the surface of entrained water droplets into the air to form humidified air,

separating excess droplets from the humidified air and

distributing the humidified air into the compartment

wherein the entraining step further comprises the steps of:

extending the surface of the body of water into the interior of the jet and

entraining water droplets into the air from the extended surface.

5,699,984

ENERGY-ABSORBING LINK MEMBER AND AN AIRCRAFT SEAT FITTED WITH SUCH A MEMBER

Fabrice Pinault, Issoudun, France, assignor to Societe Industrielle et Commerciale de Materiel Aeronautique, Issoudun, France

Filed May 30, 1996, Ser. No. 655,461
Claims priority, application France, May 31, 1995, 95 06485
Int. Cl.⁶ B64D *25/04*
U.S. Cl. 244—122 R **12 Claims**

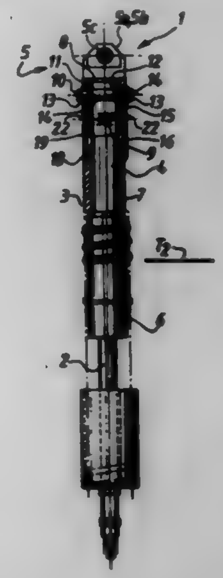

1. An energy-absorbing link member specially designed for an aircraft seat, more particularly for the back thereof, to be interposed between two structural elements of the seat,

the member comprising an outer sleeve terminated by at a first end by fastening means suitable for being rigidly associated with a first structural element; an inner sleeve terminated at an opposite, second end by a rod suitable for being rigidly associated with a second structural element; the two sleeves being fitted one in the other so that one is capable of sliding axially relative to the other in the event of the member being subjected to a force exceeding a certain threshold; the two sleeves being provided with facing holes on a transverse axis; a first pin constituting a fuse relative to the trigger threshold being mounted transversely through the holes and being held in position by a locking member such as a spring clip; a second pin being mounted transversely relative to the two sleeves in such a manner as to pass through them, to be carried by and to have at least one end projecting from the inner sleeve which is provided with at least one transverse-axis hole while being placed within the outer sleeve which includes a complementary housing in its inside face, the second pin having the primary function, while the two sleeves are sliding axially apart due to the trigger threshold being exceeded, of deforming the outer sleeve whose inside dimension is smaller than the corresponding dimension of the second pin so as to absorb energy, and having a second function of constituting an end-of-stroke stop by co-operating with an internal projection formed on the inside face of the outer sleeve.

5,699,985

PORTABLE MOTORCYCLE CARRIER

Robert D. Vogel, Rte. #1- Box 65, Mandan, N. Dak. 58554

Filed Sep. 22, 1993, Ser. No. 125,455
Int. Cl.⁶ B60R *7/00*
U.S. Cl. 224—564 **1 Claim**

1. A carrier for a vehicle having a central hitch receiver and a pair of additional hitch receivers wherein each additional hitch

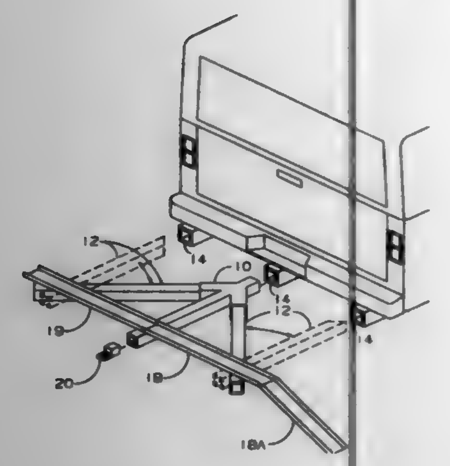

receiver is positioned on an opposite side of the central hitch receiver; a carrier comprising:

A main support adapted to be secured to the central hitch receiver;

A pair of angle receivers positioned on opposite sides of the main support;

A ramp member having a central portion removably secured to an end of said main support and a pair of end portions positioned on opposite sides of the central portion; and

A pair of auxiliary supports, each auxiliary support having one end rotatably secured to a respective end portion of the ramp member and another end adapted to be secured to a respective additional hitch receiver when the auxiliary support is rotated to an outer position and adapted to be secured to a respective angled receiver when the auxiliary support is rotated to an inner position.

5,699,986

RAILWAY CROSSING COLLISION AVOIDANCE SYSTEM

James E. Welk, Killaloe, Canada, assignor to Alternative Safety Technologies, Whitney, Canada

Filed Jul. 15, 1996, Ser. No. 679,902

Int. Cl.[6] **B61L** *29/00*

U.S. Cl. 246—125 **18 Claims**

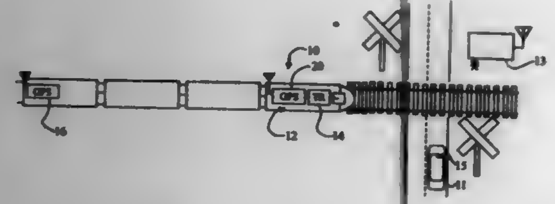

1. A railroad crossing collision avoidance system for alerting a road vehicle approaching a railroad crossing of an oncoming rail vehicle, comprising:

tracking means on said rail vehicle to determine said rail vehicle's position with respect to said railroad crossing;

transmitter means responsive to said tracking means for transmitting tracking data at a unique radio frequency carrier, said tracking data being indicative of the location of said rail vehicle from said railroad crossing;

first receiver means comprised of a multi-frequency scanner at said railroad crossing for receiving said transmitted tracking data from one or more of said rail vehicles;

processor means at said railroad crossing for calculating the velocity and arrival time of said rail vehicle in response to said tracking data; and

transmitter means at said railroad crossing responsive to said processor means for transmitting an alarm signal to an approaching road vehicle, said alarm signal being indicative of the velocity and time of arrival of a rail vehicle at said railroad crossing.

5,699,987

HOSE HANGING APPARATUS HAVING A DRAWER

Daniel J. Romaneschi, 5345 N. Fairmount Pl., Spokane, Wash. 99205, and Jeff Bendio, 14712 E. Olympic Ave., Spokane, Wash. 99216

Filed Jul. 29, 1996, Ser. No. 687,966

Int. Cl.[6] **B05B** *15/06*

U.S. Cl. 248—89 **7 Claims**

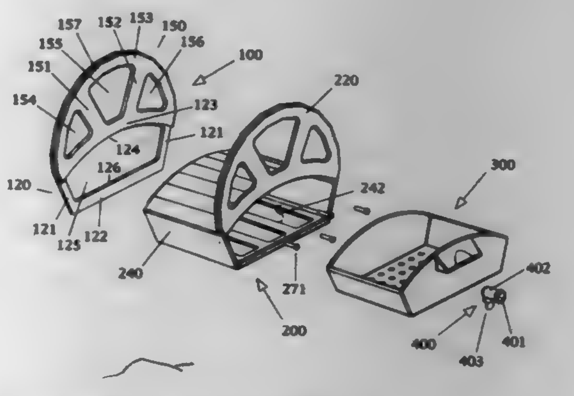

1. A hose hanging apparatus, comprising:

(a) a main body comprising:

(a) a drawer housing, having a front opening, comprising:

(a) an upper deck having a hose support surface having a front edge;

(b) a left side, attached to the upper deck;

(c) a right side, attached to the upper deck; and

(d) a bottom surface, defining at least one ventilating opening, attached to the left side and the right side;

(b) a front railing, carried by the front edge of the upper deck; and

(c) a back wall, smaller in size than the front opening, comprising means for attaching the back wall to a vertical support surface; and

(b) a drawer, slidably carried by the drawer housing, comprising:

(a) a floor, having a sloping lower surface defining at least one drain hole;

(b) a front wall, connected to the floor; and

(c) a handle, attached to the front wall.

5,699,988

COUPLER CLAMPING APPARATUS FOR INTERCONNECTING A FREE-STANDING, WHEELED INTRAVENOUS POLE WITH MOBILE PATIENT TRANSFER DEVICES

Conrad H. Boettger, Hesston, and Bill J. Hawks, Jr., Wichita, both of Kans., assignors to St. Francis Research Institute, Wichita, Kans.

Continuation-in-part of Ser. No. 5,825, Jan. 19, 1993, Pat. No. 5,355,539. This application Oct. 14, 1994, Ser. No. 324,026

Int. Cl.[6] **F16L** *3/00*

U.S. Cl. 248—122.1 **7 Claims**

1. An arm assembly for permitting releasable interconnection of a mobile patient transfer device and a separate support stand, wherein the transfer device presents a frame element, and the support stand includes a wheeled base and an upright standard secured to the base, the arm assembly comprising:

an articulating arm for interconnection of the transfer device with the stand, the arm having first and second axial ends that are movable relative to one another in any direction to permit movement of the stand relative to the transfer device when the stand is interconnected with the transfer device by the arm;

a coupling means for coupling the first end of the articulating arm to the support stand, the coupling means being formed of a clamp that is attached to the arm and includes a recessed area for receiving the standard and a means for maintaining the standard within the recessed area; and

an attachment means for attaching the second end of the articulating arm to the frame element of the transfer device, the attachment means including a first attachment element configured to be secured to the frame element of the transfer device and a second attachment element secured to the second end of the articulating arm, the first and second attachment elements being detachable from one another to permit removal of the arm and coupling means from the transfer device.

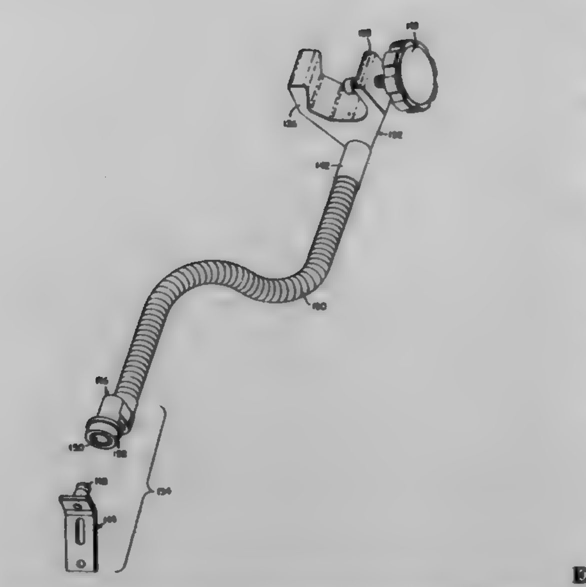

5,699,989

MAILBOX MOUNTING DEVICE WHICH RETURNS TO ITS ORIGINAL POSITION AFTER SIDE IMPACT

James R. Guthrie, R.D. #2 Box 121, Hopwood, Pa. 15445

Filed May 23, 1996, Ser. No. 652,360

Int. Cl.[6] **B65D** *91/00*

U.S. Cl. 248—219.2 **8 Claims**

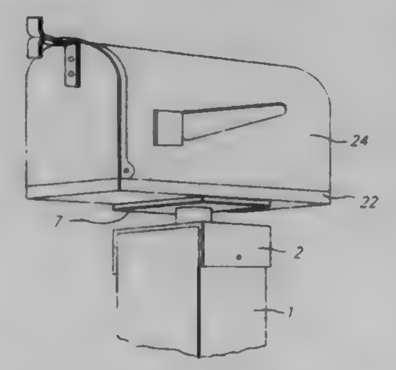

1. A mailbox to post mounting device, comprising:

(a) a horizontal mounting member having a cylindrical pivot shaft on its top;

(b) a base plate mounted upon said cylindrical pivot shaft having a base plate hole through its central axis perpendicular to the top of said base plate sufficient to allow said cylindrical pivot shaft to fit through;

(c) a cylindrical cap mounted upon and permanently attached to said cylindrical pivot shaft having a cap pivot stopping pin extending radially outward;

(d) resilient means, connected between said cylindrical cap and the said base plate, for said base plate from rotating out of position;

(e) a pivot stopping pin attached to the top of said base plate to interact with said cap pivot stopping pin in order to prevent said base plate from rotating more than 360 degrees in relation to said cylindrical cap; and

(f) a spacer mounting plate being permanently attached to the top of said base plate and having a hole of sufficient size that said cylindrical cap, said cap pivot stopping pin, said resilient means, and said pivot stopping pin can all fit through, and having sufficient thickness to provide that said cylindrical pivot shaft, said cylindrical cap, said cap pivot stopping pin, said resilient means and said pivot stopping pin do not protrude beyond the top of said spacer mounting plate, and having a shape which is compatible with said mail box.

5,699,990

HOLDER FOR EYEGLASSES

Eugene Seach, 2379 Hean-Hyde Rd., NE., Warren, Ohio 44484

Filed May 18, 1995, Ser. No. 445,224

Int. Cl.[6] **A47F** *5/00*

U.S. Cl. 248—309.1 **2 Claims**

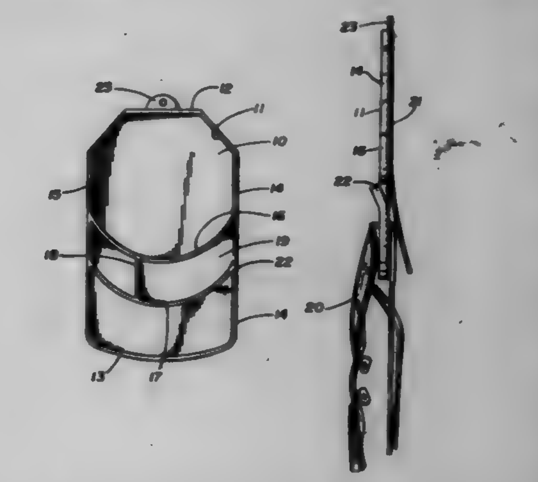

1. An eye glass holder for supporting a pair of eye glasses in a removable secured relation thereto comprises; a generally rectangular substantially rigid planar supporting body member having a perimeter edge, a portion of the perimeter edge defining a notch extending inwardly from adjacent perimeter edge portions, a resilient backing member integrally secured to a portion of said support body member adjacent said notch, said resilient backing member defining selective access to the notch in said supporting body member by deformation of a portion of said resilient backing member overlying said notch, one of said adjacent perimeter edge portions having an angular offset outwardly extending portion therefrom.

5,699,991

PORTABLE CAMPING EQUIPMENT HANGER

Matthew John Melinyshyn, 3892 Brewer's Mills Rd., R.R. #1, Seeley's Bay, Ontario, Canada, K0H 2N0

Continuation of Ser. No. 440,959, May 15, 1995. This application Mar. 25, 1997, Ser. No. 824,214

Claims priority, application Canada, May 30, 1994, 2124632

Int. Cl.[6] **A47H** *1/10*

U.S. Cl. 248—332 **8 Claims**

1. In camping, a method to enable a single individual to raise a payload including camping equipment and/or provisions and store the payload at an elevated height above the ground comprising the steps of:

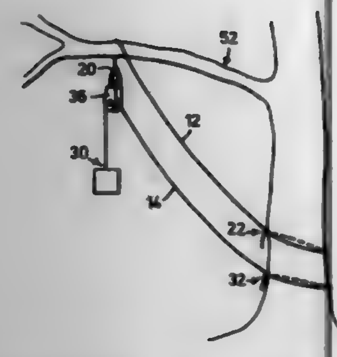

(a) providing first and second flexible elongate line members and a pulley, each of said line members having a first end, a second end and an intermediate portion, said pulley connected only to said first flexible line member, said first flexible line member being secured to said pulley only at said first end;
(b) locating a support member at a camping site at an elevated height;
(c) passing said first line member over said support member so that said intermediate portion of said first line member passes over said support member and said pulley and said second end are each positioned adjacent the ground;
(d) passing said second flexible elongate line member through said pulley such that said intermediate portion of second flexible elongate line member is positioned within said pulley;
(e) raising said pulley to an elevated position above the ground and securing said pulley at said elevated position thereby raising said intermediate portion of said second flexible elongate line member to said elevated position;
(f) securing the payload to said first end of said second elongate flexible member; and,
(g) raising the payload to said elevated position and securing the payload at said elevated position so that wild animals do not have access thereto.

5,699,992
PUMP STAND
Erwin Hauser, Emmendingen-Kollmarsreute, Germany, assignor to KNF Neuberger GmbH, Freiburg-Munzingen, Germany
Filed Jan. 29, 1996, Ser. No. 592,935
Int. Cl.^{6} F16M *7/00*
U.S. Cl. 248—635 **15 Claims**

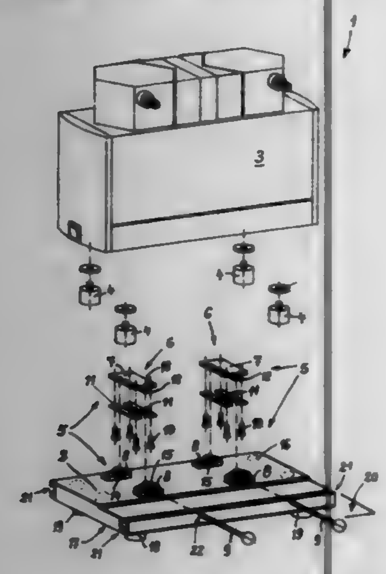

1. A pump stand comprising a base plate (2) and at least one pump (3) capable of being mounted upon the pump stand with supports (4) serving as vibration dampers, wherein the pump (3) has a first coupling element (7) located on the pump and the base plate (2) has a second coupling element (8) located on the base plate upper side, the first and second coupling elements (7,8) being separably attachable to each other on their sides facing each other, said first and second coupling elements (7,8) engaging with each other essentially without locking in an assembled state of the pump and the base plate, the first and second coupling elements (7,8) being arranged at a defined place on the base plate (2) and on the pump (3) such that the first and second coupling elements are adapted to be used in conjunction with pumps of various sizes, the first and second coupling elements (7, 8) including through bores which are arranged approximately in alignment in the assembled state of the pump and the base plate, and a fastening rod (9) being provided for insertion and penetration of the coupling elements (7,8) in a securing position, the first coupling element on the pump underside comprises at least one coupling plate (7) made of a soft elastic material with a sleeve-shaped formation (12) for the through bore (13), and the second coupling element on the base plate upper side comprises bearing block counter elements (8) with through bores (14) spaced at a distance from each other about the length of the coupling plate, and the through bore (13) has a larger diameter than that of the fastening rod (9).

5,699,993
SEISMIC ANCHORING DEVICE FOR EQUIPMENT
Matthew Hill, and N. Michele Hill, both of 5308 Vista Point Ct., Concord, Calif. 94521
Filed Jun. 20, 1995, Ser. No. 492,622
Int. Cl.^{6} F16M *1/00*
U.S. Cl. 248—680 **15 Claims**

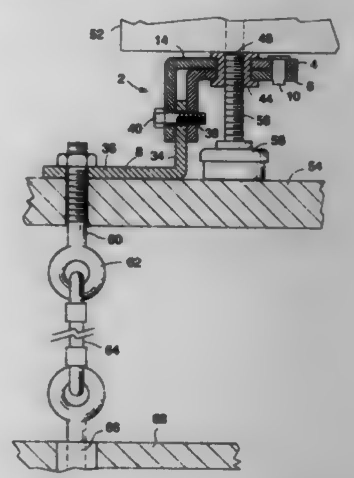

6. A seismic anchoring clip to anchor and provide lateral support for an upright leg of a piece of equipment supported on a floor, said clip comprising:
a first plate member having a first leg engaging portion with a first opening extending therethrough and accessible through one side thereof, whereby the leg of the piece of equipment may be introduced into the first opening, and a first spacing portion extending at ah angle with respect to the leg engaging portion;
a second plate member having a second leg engaging portion with a second opening extending therethrough and accessible through one side thereof, whereby the leg of the piece of equipment may be introduced into the second opening, and a second spacing portion extending at an angle with respect to the leg engaging portion;
means coupling the leg engaging portions of the first and second plate members together in overlapping relationship whereby the members may be rotated between an open condition in which the openings in the leg engaging portions of the plate members are accessible and the spacing portions of the plate members are angularly displaced relative to one another and a closed condition in which the openings are partially aligned to form a closed throughhole having an axis extending through the leg engaging portions of the first and second plate members and the spacing portions are generally angularly aligned; and,
means to secure the spacing portions of the first and second plate members to the floor when aligned to maintain the leg engaging portions in spaced relationship to the floor with the axis of the throughhole disposed upright relative to the floor.

5,699,994
SENSOR-TYPE FLUSH VALVE ASSEMBLY WITH PUSH BUTTON DEVICE FOR OPTIONAL MANUAL OPERATION
Mc-Gavour Wu, Nan-Tou, Taiwan, assignor to Hydrotek Corp., Nan-Tou, Taiwan
Filed Sep. 12, 1996, Ser. No. 713,159
Int. Cl.^{6} F16K *31/06*
U.S. Cl. 251—129.03 **6 Claims**

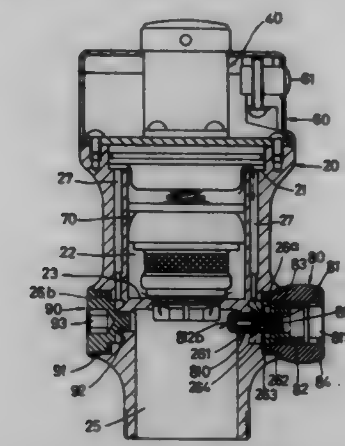

1. A sensor-type flush valve assembly comprising:
a hollow main valve body having a top section and confining an axial space with a top end portion and a lower end portion, said main valve body being formed with an inwardly and radially extending valve seat in said lower end portion of said axial space, a radial inlet port communicated with said axial space and disposed above said valve seat, and a downwardly extending outlet port disposed below said valve seat and provided with a radial first mounting hole which has an axis that is angularly spaced from that of said inlet port, said main valve body being further formed with an axially extending first through-hole which extends from said first mounting hole to said top end portion of said axial space;
a movable valve piece disposed in said axial space and normally blocking said valve seat, said valve piece having top and bottom sides and being formed with an axially extending water hole for guiding water from said bottom side to said top side of said valve piece;
an electromagnet unit mounted on said top section of said main valve body and associated operably with said valve piece so as to move said valve piece away from said valve seat in order to permit water flow from said inlet port to said outlet port when said electromagnet unit is activated;
a casing secured on said top section of said main valve body to house said electromagnet unit therein;
a power supplying unit disposed in said casing and connected electrically to said electromagnet unit;
a sensor unit mounted on said casing and operable so as to activate said power supplying unit to activate in turn said electromagnet unit; and
a push button device mounted in said first mounting hole and operable from a normal state, wherein fluid flow from said first through-hole to said outlet port is blocked, and an operated state, wherein fluid flow from said first through-hole to said outlet port is permitted.

5,699,995
PIVOTING VALVE ASSEMBLY
Walter D. Robertson, III, Harleysville, Pa., assignor to Emerson Electric Co., St. Louis, Mo.
Continuation-in-part of Ser. No. 457,402, Jun. 1, 1995. This application Mar. 13, 1996, Ser. No. 615,078
Int. Cl.^{6} F16K *31/06*
U.S. Cl. 251—129.15 **24 Claims**

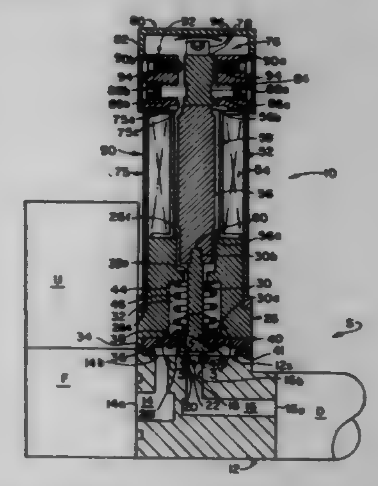

1. A valve assembly for use in a fluid flow system comprising:
a valve body having a fluid flow passage formed therein including an inlet, an outlet, and an orifice interposed between said inlet and outlet;
a freely movable valve member tiltable relative to said orifice between a valve closing position in which said valve member rests upon an edge extending about said orifice and a valve opening position;
lever means supporting and tilting said valve member;
a solenoid pivotally moving said lever means about a pivot for movement of said lever means to tilt said valve member to open a fluid flow path between said inlet and said outlet through said orifice; and,
means contacting said lever means and said valve member and movable by said lever means when said lever means pivotally moves to tilt said valve member.

5,699,996
METHOD FOR PLACING CABLE WITHIN COILED TUBING
Bruce W. Boyle, Sugar Land, and Laurent E. Muller, Stafford, both of Tex., assignors to Schlumberger Technology Corporation, Houston, Tex.
Division of Ser. No. 239,198, May 6, 1994, Pat. No. 5,573,225. This application Mar. 20, 1996, Ser. No. 619,786
Int. Cl.^{6} H02G *1/00*
U.S. Cl. 254—134.4 **11 Claims**

1. A method of installing a cable having a diameter into a length of coiled tubing, a bore therefore having an internal diameter, said method comprising the steps of:
a. providing a pipe having an internal diameter greater than said diameter of said cable and smaller than said internal diameter of said coiled tubing, said pipe including a seal at one end, said seal having an internal passage adapted for allowing said cable to be inserted axially within said pipe, a coupling at the opposite end of said pipe for connection with said coiled tubing and a fluid coupling in fluid communication with an internal bore of said pipe intermediate said ends thereof;

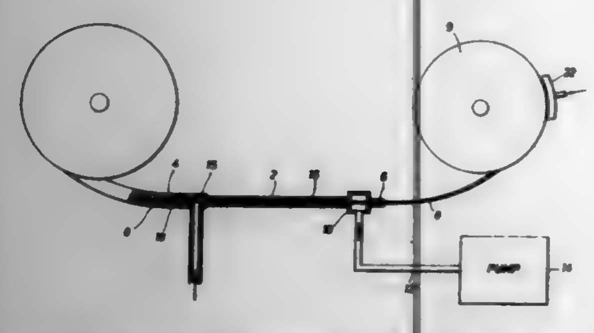

b. providing a fluid pump in fluid communication with said fluid coupling on said pipe;
c. providing a fluid to be pumped;
d. feeding a length of cable through said seal, through said length of said pipe and into said bore of said coiled tubing;
e. pumping said fluid into said pipe, whereby fluid drag on said cable within said pipe overcomes a drag force on said cable through said seal and said cable is caused to be pulled by fluid drag through said length of said coiled tubing; and
f. inserting a free end of said coiled tubing into a wellbore.

5,699,997
FOLDABLE PLAYYARD CONNECTION DEVICE
Li-chu Chen Huang, No. 99, Fuchou 7th St., Chiayi City, Taiwan
Filed Apr. 22, 1996, Ser. No. 636,014
Int. Cl.⁶ E04H *17/16*
U.S. Cl. 256—26 **9 Claims**

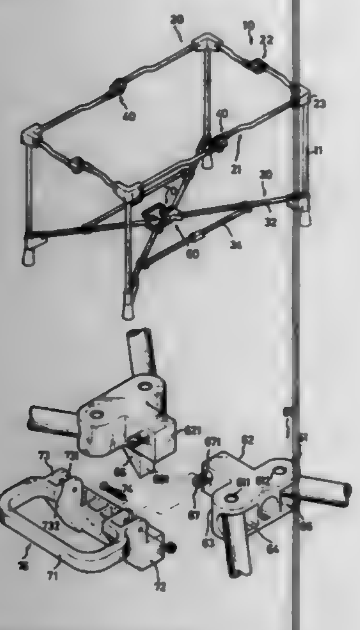

1. A connection device comprising:
a symmetrically opposed pair of connectors having
a long portion with a plurality of recesses defined therein and having a top face, a bottom face, a first side and a second side;
a short portion integrally and perpendicularly extending from said first side of said long portion and having a front surface;
a plurality of first through-holes each extending through a respective end of said long portion from said top face to said bottom face thereof and in communication with said recesses therein;
a handle having a grip portion with two ends, a bar portion and a plurality of pairs of connecting portions extending therebetween;
stop means extending from said long portion; and
retaining means extending from said short portion, said retaining means comprising a pin extending pivotally and perpendicularly from a side face of said short portion;
wherein said connection device is adapted to pivotally receive a plurality of diagonal bars each within one of said recesses via one of said first through-holes; and
wherein said pairs of said connecting portions are U-shaped with two arms each extending in a direction to said bar portion and defining an opening therebetween.

5,699,998
MANUFACTURE OF POCKET SPRING ASSEMBLIES
Milton Zysman, Suite 801, 50 Prince Arthur Avenue, Toronto, Ontario, Canada, M5R 1B5
PCT No. PCT/CA94/00055, § 371 Date Sep. 18, 1995, § 102(e) Date Sep. 18, 1995, PCT Pub. No. WO94/18116, PCT Pub. Date Aug. 18, 1994
PCT Filed Feb. 1, 1994, Ser. No. 500,904
Claims priority, application United Kingdom, Feb. 1, 1993, 9301927
Int. Cl.⁶ F16F *3/00*
U.S. Cl. 267—189 **27 Claims**

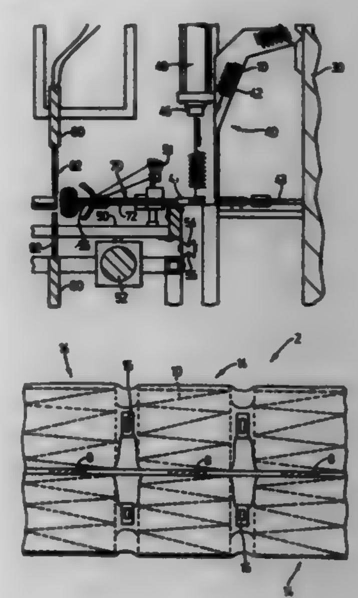

1. A method of producing a pocket spring assembly, wherein two layers of fabric are secured together along multiple parallel seam zones so as to form a quilt defining a plurality of parallel fabric tubes extending longitudinally of a plane of the quilt, the tubes so formed are supported on guides extending longitudinally through the tubes, portions of the tubes formed by the quilt are repeatedly drawn from the guides at their one ends, each layer of fabric in the drawn off portion is pinched to form folds extending oppositely out of the plane of the quilt, the folds are secured to form pockets from the drawn off portions of the quilt, and precompressed coil springs are passed through the guides and released into the pockets between each drawing of the quilt, with their axes perpendicular to both the plane of the quilt and the direction of advancement of the quilt, so that secured folds in the fabric of the tubes in front of and behind the released springs retain them in a two dimensional array of pockets with the axes of the springs perpendicular to the plane of the quilt.

5,699,999
ALIGNED MATTRESS SPRING CORE
Thomas J. Wells, Carthage, Mo., assignor to L&P Property Management Company, Chicago, Ill.
Continuation-in-part of Ser. No. 52,737, Apr. 2, 1996, Pat. No. Des. 382,427. This application May 13, 1996, Ser. No. 645,246
Int. Cl.⁶ F16F *3/06;* **A47C** *25/00*
U.S. Cl. 267—103 **11 Claims**

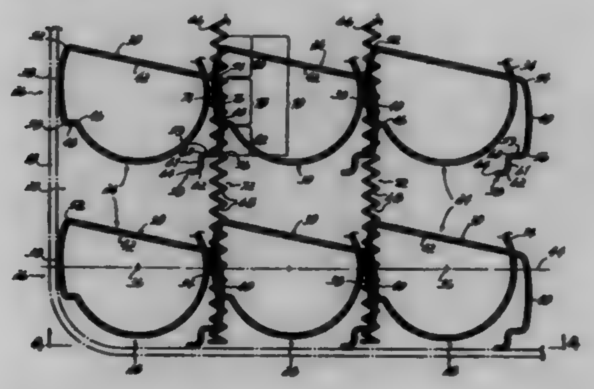

1. A mattress comprising:
an inner spring core comprising a plurality of coil springs arranged in longitudinally extending columns and transversely extending rows,
each coil spring being of a single piece of wire having an upper end turn in a first plane, a lower end turn in a second plane and a plurality of central convolutions between said end turns defining a central spring axis, each end turn having a first and second leg connected by a base web, said end turns being arranged such that a first portion of a first leg of one end turn of one coil spring overlaps a first portion of a second leg of an adjacent end turn of an adjacent coil spring in an overlapping region, each of said first and second legs of each of said end turns also having second portions thereof which are not overlapped,
a plurality of parallel helical lacing wires connecting adjacent rows of said springs of said core, each helical lacing wire comprising multiple revolutions encircling said overlapped region of adjacent end turns of adjacent springs and at least one complete revolution encircling said second portions of said first and second legs,
a mattress pad; and
an upholstered fabric covering encasing said inner spring core and said mattress pad.

5,700,000
TRANSVERSELY COMPLIANT BODY SPRING FOR A HYDRAULIC BEARING
Franz Josef Wolf, Bad Soden-Salmuenster; Martin Mohr, Brachttal-Udenhain, and Stefan Nix, Waechtersbach-Aufenau, all of Germany, assignors to Woco Franz-Josef Wolf & Co., Bad Soden-Salmuenster, Germany
Filed Jun. 7, 1995, Ser. No. 480,749
Claims priority, application Germany, Jul. 27, 1994, 44 26 588.5
Int. Cl.⁶ F16M *5/00*
U.S. Cl. 267—140.13 **8 Claims**

1. A bearing for damping oscillatory masses, comprising:
a rubber-elastic support body (2) including an outer surface;
a receiving device (3) mounted to the support body (2) to connect the bearing to the oscillatory mass; and
a housing (11) bracing the bearing body in frictionally locking manner to a mount;
wherein the support body (2) includes at least one cavity defined by at least one outer wall, wherein the wall extends substantially in an axial direction of the support body such that when

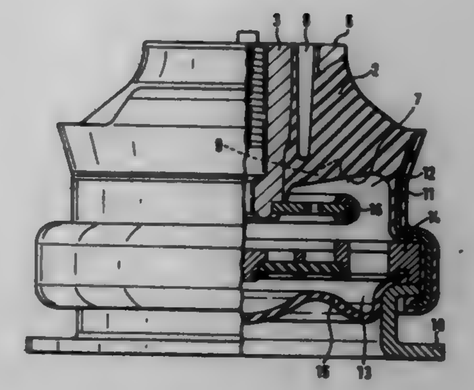

the bearing is loaded statically, the outer wall(s) of the clearance remain mutually apart.

5,700,001
METHOD OF RESIN SEALING AN OBJECT WITH APPARATUS INCLUDING A GAS SPRING
Shunji Yamauchi, Fukuoka, Japan, assignor to Mitsubishi Denki Kabushiki Kaisha, Tokyo, Japan
Division of Ser. No. 16,371, Feb. 11, 1993, Pat. No. 5,413,471. This application Mar. 20, 1995, Ser. No. 407,440
Claims priority, application Japan, May 12, 1992, 4-118731
Int. Cl.⁶ F16F *7/00*
U.S. Cl. 267—224 **7 Claims**

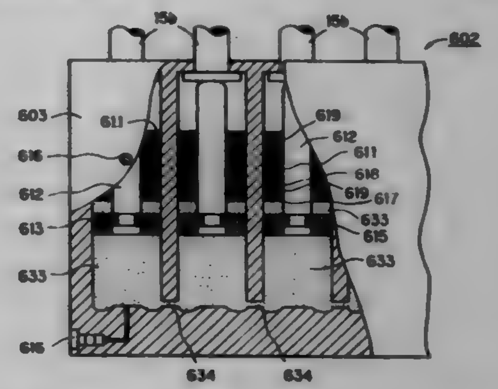

1. A gas spring using a gas as a buffer medium, comprising:
(a) a housing defining a plurality of cylinders respectively having first ends and second ends, said cylinders being arranged in parallel;
(b) a plurality of pistons slidably fitted in said plurality of cylinders respectively for defining spaces therewith and with said cylinders including said second ends which are hermetically sealed relative to an outside of said housing and communicate with each other;
(c) means for limiting a sliding range of each of said plurality of pistons to prevent each of said pistons from projecting out over a predetermined degree from said housing,
wherein said means for limiting a sliding range of said pistons comprises an end wall of said housing at said first ends of said cylinders, and
(d) cartridges airtightly fixed in said cylinders respectively,
wherein each of said pistons is provided with a piston rod and a rod retainer, said piston rods each slidably and airtightly penetrating a corresponding one of said cartridges,
wherein each retainer is fixedly mounted on a bottom of a corresponding piston rod and slidably contacts an inner surface of a corresponding one of said cylinders,
wherein each retainer defining a corresponding vent, and
wherein each of said spaces is defined with a corresponding retainer, a corresponding piston rod, a corresponding cylinder inner surface, and a corresponding one of said second ends.

5,700,002

SHEET-BUNDLE PROCESSING APPARATUS IN WHICH SHEETS ARE ALIGNED USING VARIABLE PRESSING FORCE

Katsuhito Kato, Kawasaki, and Seiichiro Adachi, Yokohama, both of Japan, assignors to Canon Kabushiki Kaisha, Tokyo, Japan

Filed Oct. 31, 1995, Ser. No. 550,784

Claims priority, application Japan, Nov. 11, 1994, 6-277303

Int. Cl.⁶ B65H *39/02*

U.S. Cl. 270—58.12 **40 Claims**

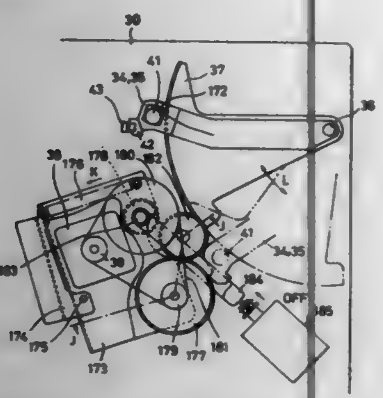

1. A sheet processing apparatus comprising:
at least one sheet receiving tray for accommodating sheets;
sheet discharge means for discharging the sheets onto said at least one sheet receiving tray;
aligning means for pressing end surfaces of the sheets accommodated in said at least one sheet receiving tray to align the sheets;
processing means for processing the sheets accommodated in said at least one sheet receiving tray; and
control means for controlling said aligning means and for changing a pressing force in the widthwise direction of the sheets exerted by said aligning means in accordance with a change in mode of a process performed by processing means.

5,700,003

DEVICE FOR SENSING THE REMAINING AMOUNT OF COPY PAPER

Moo-Kyung Sung, Suwon, Rep. of Korea, assignor to SamSung Electronics Co., Ltd., Kyungki-do, Rep. of Korea

Filed Sep. 27, 1995, Ser. No. 534,785

Claims priority, application Rep. of Korea, Sep. 27, 1994, 24341/1994

Int. Cl.⁶ B65H *7/08*

U.S. Cl. 271—110 **11 Claims**

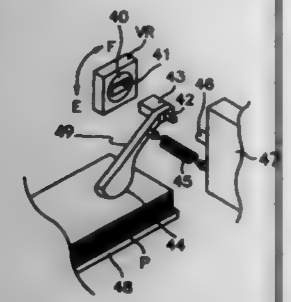

1. An apparatus for sensing a stored amount of paper sheets in a paper storing means and for displaying the sensed amount of paper sheets on a display means, said apparatus comprising:
paper sensing means comprising:
a variable resistor having a first resistance value when said paper storing means is full of paper and a second resistance value when said paper storing means is empty of paper sheets, said variable resistor being connected to a reference potential;
actuator means connected to said variable resistor, said actuator means being in contact with a top most paper sheet of a stack of paper in said paper storing means, said actuator means incrementally changing the resistance value of said variable resistor between said first resistance value and said second resistance value as the amount of paper sheets in said stack of paper decreases;
another resistor connected to a voltage source and connected at a node to said variable resistor; and
analog-to-digital converting means connected to said node for converting an analog voltage signal sensed at said node to a digital signal; and
means connected to said paper sensing means for generating a stored paper amount sensing signal by determining the amount of paper sheets stored in said paper storing means in response to said digital signal.

5,700,004

APPARATUS FOR HANDLING ARTICLES

Mel J. Bahr, Corcoran, and Timothy A. Bahr, Brooklyn Park, both of Minn., assignors to MGS Machine Corporation, Maple Grove, Minn.

Filed Mar. 6, 1996, Ser. No. 611,801

Int. Cl.⁶ B65H *1/02*

U.S. Cl. 271—171 **13 Claims**

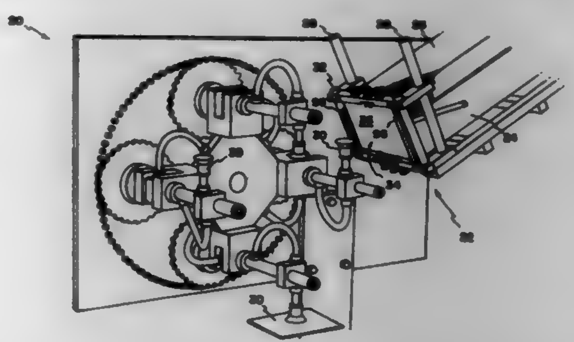

11. A hold-back device configured to be mounted at a mouth of a magazine of an article-handling apparatus, the magazine having a hold-back device receiving means, the hold-back device comprising:
a frame structure defining a feed gap;
a hold-back structure projecting from the frame structure into the feed gap, the hold-back structure being adapted for engaging articles that are fed through the feed gap of the frame structure; and
mounting structure extending from the frame structure, the mounting structure being constructed and arranged to allow the frame structure to be removed from the magazine without requiring the aid of tools, and the mounting structure including means for slidably engaging the mounting structure with the receiving means of the magazine allowing multiple hold back devices having varying preset hold back structure sizes to be efficiently interchanged at the mouth of the magazine to accommodate articles of varying size.

5,700,005

APPARATUS FOR CONTROLLING SHEET FEED-OUT FROM AN AUTOMATIC SHEET FEEDER INTO A RECEIVING TRAY

Hsi-Min Chen, Hsinchu, Taiwan, assignor to Must Systems Inc., Taipei, Taiwan

Filed Apr. 23, 1996, Ser. No. 636,534

Int. Cl.⁶ B65H *29/70*

U.S. Cl. 271—188 **2 Claims**

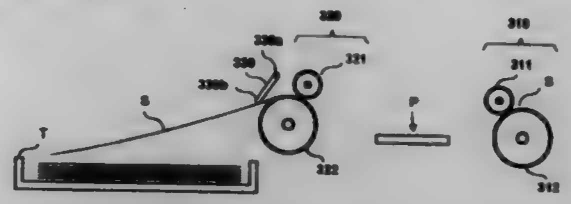

1. An apparatus for feed-out control of a sheet, comprising:
(a) a set of feed-out rollers including at least a top roller and a bottom roller for feeding out the sheet, each of said rollers having a longitudinal dimension; and
(b) a pivotal pressing member having a pivoted end and a free end, said pivotal pressing member being pivotally affixed proximate to said feed-out rollers and above said bottom roller in a direction of gravity in such a way as to allow the free end of said pivotal pressing member to rest on said bottom roller of said feed-out roller set when the sheet is not being fed out of the feed-out roller set and to provide a pressure uniformly along the longitudinal dimension of said bottom roller;
wherein
said pivotal pressing member comprises a substantially U-shaped bar, said U-shaped bar having two pivoted ends at opposite distal ends thereof, said pivoted ends being supported outside of the longitudinal dimension of said bottom roller,
said pivotal pressing member is pivotally turned by the sheet as the sheet is being fed out of said feed-out rollers, and
said pivotal pressing member presses down against the tail edge of the sheet and applies a uniform pressure as the sheet is entirely fed out of the feed-out roller set, thus causing an increased frictional force between the sheet and the bottom roller which allows the sheet to be pushed away by said bottom roller from said feed-out roller set.

5,700,006

SHEET FEEDING APPARATUS WITH SUSPENDED SHEET CARRYING DEVICE AND IMAGE FORMING APPARATUS

Harukazu Sekiya; Jun Saito, both of Kawasaki; Yuzo Isoda, Yokohama; Yasuhiro Uchida, Tokyo; Makoto Izumi, Yokohama, and Takashi Kuwata, Kawasaki, all of Japan, assignors to Canon Kabushiki Kaisha, Tokyo, Japan

Filed Nov. 14, 1995, Ser. No. 557,273

Claims priority, application Japan, Nov. 14, 1994, 6-278800

Int. Cl.⁶ B65H *9/12*

U.S. Cl. 271—241 **14 Claims**

1. A sheet feeding apparatus comprising:
sheet carrying means, suspended on both sides in a direction perpendicular to a sheet feeding direction by suspending means, for carrying sheets;
winding means for winding the suspending means, thereby moving the sheet carrying means up and down;
sheet reference means disposed at one end of the sheets carried on the sheet carrying means in a direction perpendicular to a sheet feeding direction for aligning the sheets; and
sheet feeding means for feeding out a topmost sheet of the sheets on the sheet carrying means along the sheet reference means;
wherein a connection position at an intersection of the suspending means and the sheet carrying means, at a position on a

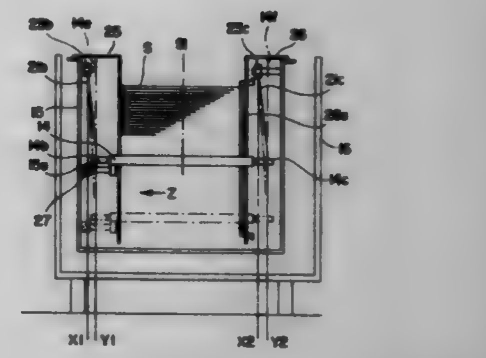

side of the sheet reference means, is located closer to a center of the sheets with respect to a position of a suspending original point of the suspending means located on the same side of the sheet reference means and over the sheet carrying means; and
other connection positions at an intersection of the suspending means and the sheet carrying means at a position on an opposite side of the sheet reference means are located remote from the center of the sheets with respect to a position of a suspending original point on the suspending means located on the opposite side of the sheet reference means and over the sheet carrying means.

5,700,007

TICKET REDEMPTION ARCADE GAME

Bryan M. Kelly, Dublin; Norman B. Petermeier, Saratoga; Matthew F. Kelly, Dublin, all of Calif., and J. Richard Oltmann, Scottsdale, Ariz., assignors to RLT Acquisition, Inc., Pleasanton, Calif.

Continuation of Ser. No. 176,862, Jan. 3, 1994, Pat. No. 5,409,225, which is a continuation of Ser. No. 956,057, Oct. 2, 1992, Pat. No. 5,292,127. This application Apr. 21, 1995, Ser. No. 428,524

Int. Cl.⁶ A63F *7/00*

U.S. Cl. 273—118 A **33 Claims**

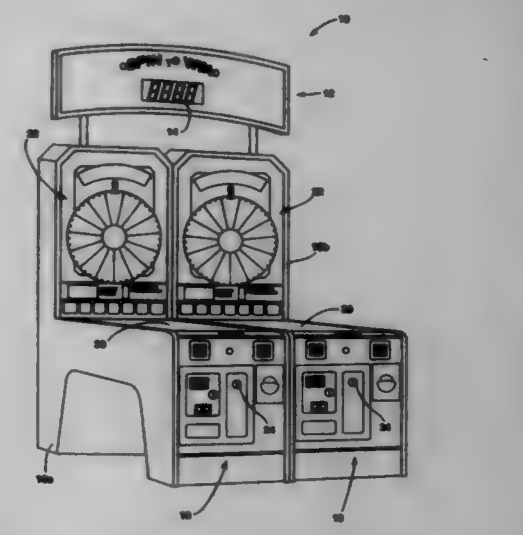

1. A ticket redemption arcade game comprising:
a coin box capable of producing a game-initiating signal in response to the receipt of a token of monetary value;
at least one playing piece provided pursuant to said game-initiating signal;
a playing surface comprising an inclined plane having a first end and a second end, wherein said first end is higher than said second end;

at least one target located proximate said second end, where said target is receptive to said playing piece after said playing piece has been directed by a player in a skilled, manual action;
a detector for detecting the position of said playing piece with respect to said target;
a display area having a plurality of radial segments, where at least some of said radial segments are associated with a score value which may be added to said game score, and wherein a display of said radial segments is moved such that different radial segments are in at least one scoring position at different times;
a controller responsive to said detector and operative to selectively control an indication of at least one of said plurality of segments in a scoring position based on said position of said playing piece with respect to said target;
a scorer operative to influence a game score based, at least in part, upon said score value associated with said indication of said at least one segment; and
a dispenser capable of dispensing a number of redemption tickets based upon said game score.

5,700,008

AMUSEMENT DEVICE INTEGRATING GAMES OF SKILL AND CHANCE

Patrick Lawlor, Marengo, and Matthew C. Coriale, Algonquin, both of Ill., assignors to Williams Electronics Games, Inc., Chicago, Ill.

Continuation of Ser. No. 604,406, Feb. 21, 1996, abandoned. This application Feb. 7, 1997, Ser. No. 796,940

Int. Cl.^{6} A63F *7/00*

U.S. Cl. 273—118 A **13 Claims**

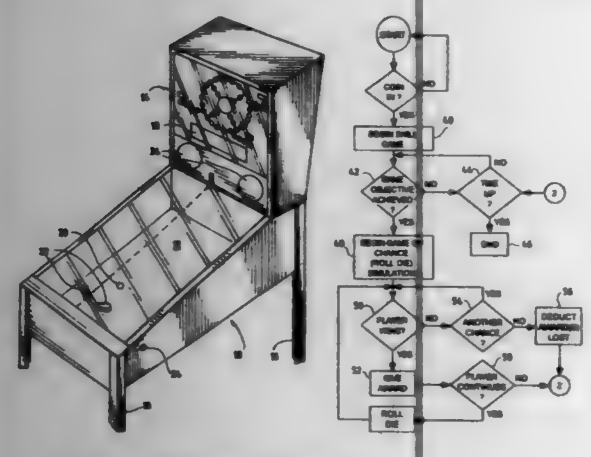

1. An amusement device comprising:
a) a rolling ball game including an inclined playfield, at least one rolling ball for movement on said playfield, scoring features disposed on said playfield activated by said ball and player operated means for controlling the movement of the ball on said playfield;
b) a board game simulation associated with said rolling ball game, said board game simulation including indicator means arranged in patterns to simulate board game paths, each indicator means corresponding to a prize, a penalty or game feature;
c) processor means for: (i) operating the rolling ball game; (ii) initiating operation of said board game simulation; (iii) selecting indicator means along said game paths to award the prize, penalty or game feature associated therewith until a player wins, loses or signals said processor means to terminate the board game simulation.

5,700,009

CASINO RANDOM NUMBER CARD COVERING GAME

Frank Meoni, Henderson, Nev., assignor to Fast Action, Inc., Las Vegas, Nev.

Filed Aug. 6, 1996, Ser. No. 692,705

Int. Cl.^{6} A63F *3/06*

U.S. Cl. 273—269 **9 Claims**

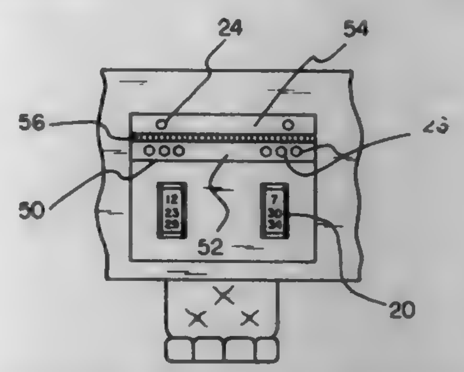

1. A casino random number card covering game kit comprising:
a plurality of player stations including an elongated table having a plurality of chairs situated proximal to each table, wherein each of the player stations includes a playing surface extending along a top portion of the table, the playing surface including a card area and a chip area positioned forwardly of the card area, the chip area being separated from the card area by a first line so as to demarcate the chip area from the card area, the chip area being divided into a rear area positioned adjacent to the card area, and a front area positioned distal to the card area by a second line extending longitudinally through a portion of the chip area;
a random number generating means for generating a random number;
a plurality of cards, each of the cards including a plurality of numbers positioned thereon, the numbers including an upper number printed proximal to a first end of the card, a middle number printed proximal to a center of the card, and a lower number printed proximal to a second end of the card, the numbers being disparate relative to one another such that the upper number is different than the middle number, and the middle number is different than the lower number;
a plurality of tokens including a first token and a second token of disparate shape relative to the first token.

5,700,010

METHOD OF PLAYING A DICE WAGERING GAME

Robert F. Mimier, 915 W. Fifth St., Marshfield, Wis. 54449

Filed Jan. 6, 1997, Ser. No. 778,959

Int. Cl.^{6} A63F *9/04*

U.S. Cl. 273—292 **21 Claims**

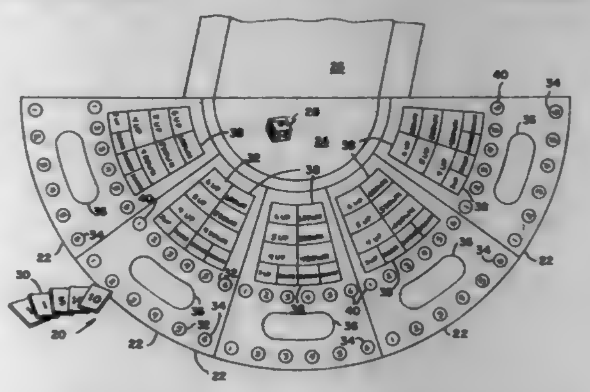

1. A method of playing a dice game comprising the steps of:
providing at least one rolling die having multiple faces, each face having indicia which is different from every other face,

and also providing betting indicators and a playing surface, the playing surface having a betting zone demarcated on it which uniquely identifies a particular face of the die;
placing at least one betting indicator on at least one betting zone;
rolling the die in a sequential manner until one of the following conditions is met, first condition, each face of the die is rolled, second condition, the same die face is rolled twice;
if the first condition is met, paying out winnings based on the number of betting indicators placed on at least one betting zone, times a first return ratio further multiplied by a second return ratio;
if the second condition is met paying out winnings based on the number of betting indicators placed on betting zones which correspond to die rolls which occurred prior to the second condition being met, times the first return ratio.

5,700,011

SEALING UNIT WITH AXIAL BRUSHES CONTROLLED BY STATIC PRESSURE IN AXIAL MOVEMENT

Daniel Olivier Bainachi, Avon; Guy Franck Paul Dusserre-Telmon, Sivry Courtry, and Daniel Georges Plona, Vulaines sur Seine, all of France, assignors to Societe Nationale d'Etude et de Construction de Moteurs d'Aviation "Snecma", Paris, France

Filed Oct. 28, 1996, Ser. No. 738,908

Claims priority, application France, Nov. 15, 1995, 95.13507

Int. Cl.^{6} F16J *15/38*

U.S. Cl. 277—65 **3 Claims**

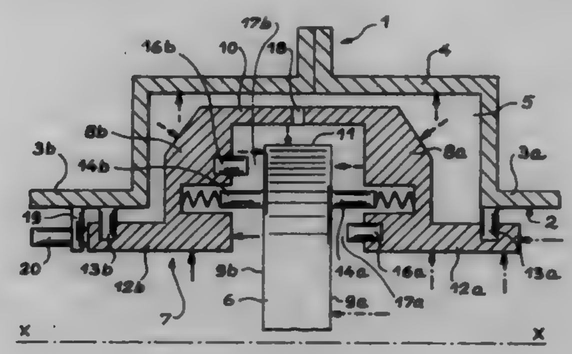

1. A sealing unit between a stator and a rotor carrying a plate and rotating about an axis, the plate separating a low pressure sector and a high pressure sector and having first and second sides respectively facing said sectors, the sealing unit comprising:
a floating body stationary with respect to the stator in rotation about the axis but slidable along the stator in a direction of said axis, the floating body comprising first and second end parts coaxial with the stator and first and second flanges respectively facing the first and second sides of the plate, and circular sealing gaskets comprising first and second planar sliding gaskets respectively provided between the end parts and the stator, first and second cylindrical stop gaskets respectively provided between the first and second flanges and the furst and second sides of the plate, a gap respectively located between the first and second flanges, the first and second sides and between the stop gaskets, and first and second cylindrical elastic gaskets respectively provided and compressed between the first and second flanges and the first and second sides of the plate,
the first and second elastic gaskets having a lesser sealing efficiency than the first and second sliding gaskets and the first and second stop gaskets and yielding when the plate comes nearer to the first and second flanges,
the first stop gaskets surrounding the first elastic gasket in the high pressure sector and the second elastic gasket surrounding the first stop gasket in the low pressure sector.

5,700,012

SEAL INSERT FOR CABLE CONNECTIONS

Franz-Fr Froehlich; Wolf Kluwe, both of Hagen, and Hans-Juergen Meltsch, Schwerte, all of Germany, assignors to RXS Kabelgamituren GmbH, Hagen, Germany

Filed Oct. 4, 1996, Ser. No. 726,391

Claims priority, application Germany, Oct. 4, 1995, 195 36 979.3

Int. Cl.^{6} F16J *15/00;* **H02G** *15/013*

U.S. Cl. 277—66 **10 Claims**

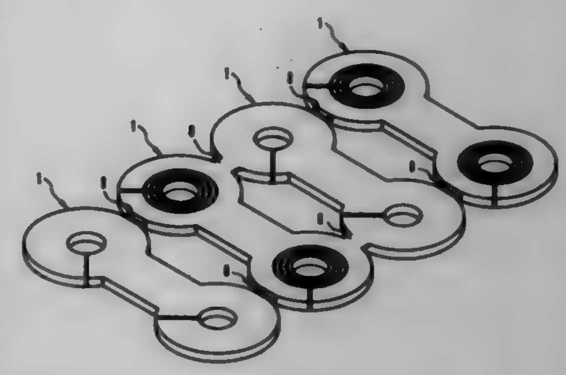

1. A seal insert for providing a seal between a cable sleeve and cable connecting apparatus, the insert comprising:
a plurality of annular, flat, two-sided sealing disks, each of said disks including
a central opening for accommodating the cable, a plurality of spaced concentric grooves disposed on a first side of the disks between the opening and an outer periphery thereof, a second side of the disks having a smooth surface,
the disks being stacked together so that the first side of each disk engages either a smooth side of an adjacent disk or the cable connecting apparatus,
each of said disks further comprising a radially extending slit for permitting the passage of uncut cable therethrough to the central opening, the disks being stacked together so that a radially extending slit of one disk is not in alignment with a radially extending slit of an adjacent disk, and
each of said disks further comprising a pair of solid radially extending segments that interrupts each of the concentric grooves, said segments being disposed on opposing sides of said slits,
wherein the each of said sealing disks is connected to another of said sealing disk to form connected pairs of said sealing disks, and
wherein each of said pairs of sealing disks are connected to another of said pairs of sealing disks by a film hinge to form connected pairs of said sealing disks.

5,700,013

SECONDARY SEAL WITH MECHANICAL GAS SEAL

John David Baty, Arlington Heights, Ill., assignor to John Crane Inc., Morton Grove, Ill.

Filed Jan. 22, 1997, Ser. No. 787,436

Int. Cl.^{6} F16J *15/32*

U.S. Cl. 277—85 **5 Claims**

1. A secondary seal in a rotary mechanical end face seal for use in a high temperature environment, the rotary end face seal comprising a first seal ring sealed against a rotating shaft and having a generally planar annular first seal ring face with spiral grooves extending at least part way across said first seal ring face and a second seal ring sealed against the housing, the second seal ring having a second seal face being generally planar and opposed to said first seal ring face and having a generally radially extending back face, one of said rings being movable axially of the shaft, said seal further comprising a first biasing means adapted to urge the axially movable seal ring toward the other seal ring to bring said

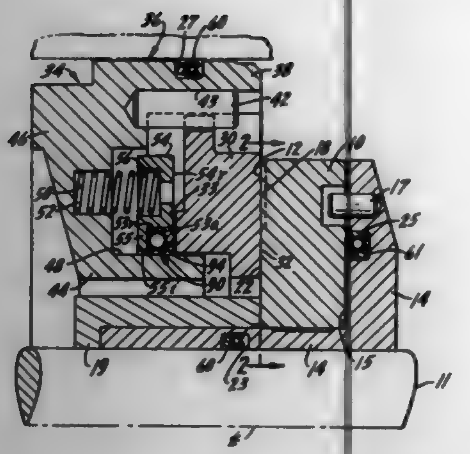

ring seal faces close to one another thereby providing a rotatable sealing engagement relative to one another, a retainer assembly for positioning and orienting said axially movable seal ring generally coaxially of the other ring, the retainer assembly including a retainer and an annularly disposed, radially extending disc having an inner diameter portion defining a notch and further including a secondary seal for providing fluid tight sealing between said axially movable seal ring and an inner diameter portion of said retainer, said secondary seal comprising an annular resilient spring member and a polymer enclosing member, said polymer enclosing member having a heel portion and two lip portions disposed around said annular spring member so as to enclose said annular resilient spring member on three sides while leaving at least an annular portion of said annular resilient spring member exposed for contact with a radial wall of an inner diameter portion of said disc.

5,700,014
VACUUM SEALING STRUCTURE
Shinsaku Morita, Kanagawa, and Yoshiyuki Sato, Tokyo, both of Japan, assignors to Japan Vac's Metal Co., Ltd., Tokyo, Japan
PCT No. PCT/JP95/01629, § 371 Date Jul. 1, 1996, § 102(e) Date Jul. 1, 1996, PCT Pub. No. WO96/04985, PCT Pub. Date Feb. 22, 1996
PCT Filed Aug. 16, 1995, Ser. No. 628,746
Claims priority, application Japan, Aug. 17, 1994, 6/215324
Int. Cl.[6] **F16J** *15/08*
U.S. Cl. 277—167.5 **10 Claims**

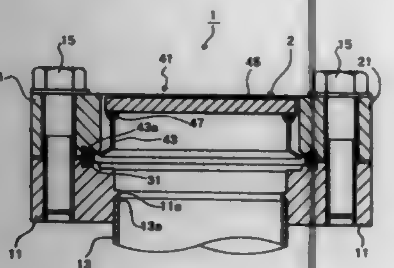

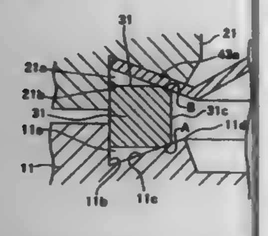

1. A vacuum sealing structure comprising:
a first connection part including a pipe section having an outwardly tapered end portion forming an annular tapered jaw;
a support member defining an annular tapered groove, said support member being independent of said pipe section;
a second connection part connected to said support member;
a metal gasket disposed in said annular tapered groove, wherein said jaw is interposed between a surface of said tapered groove and said gasket; and
a fastening member for tightening said support member so as to press said annular tapered jaw against said gasket so that a portion of said gasket engaging said annular tapered jaw is plastically deformed.

5,700,015
RUBBER/METAL COMBUSTION SEAL
Paul M. Tensor, Lombard, Ill., assignor to Dana Corporation, Toledo, Ohio
Filed Sep. 26, 1996, Ser. No. 721,646
Int. Cl.[6] **F16J** *15/12*
U.S. Cl. 277—180 **21 Claims**

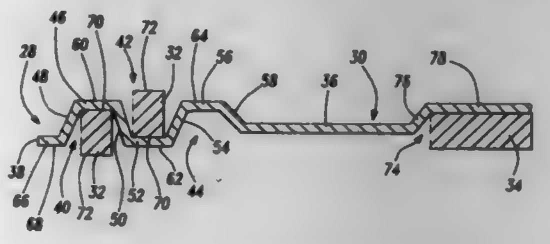

1. A combustion seal for a cylinder head gasket of an internal combustion engine having at least one cylinder bore opening, said seal comprising:
a rigid carrier having a radially extending base portion, a radially innermost peripheral edge defining a portion of said cylinder bore opening, and at least one channel defined radially inwardly of said base portion and radially outwardly of said inner peripheral edge, said channel having a root defined between adjacent walls, wherein said root is axially displaced relative to said base portion; and
an elastomeric ring received in said channel, a first face of said ring in facial contact with said root and an opposing second face defined outwardly of said channel when said seal is in a relaxed state, wherein said ring is sized in said relaxed state to be spaced away from said walls of said channel.

5,700,016
METAL LAMINATE GASKET WITH SURFACE PRESSURE ADJUSTMENT MECHANISM
Yoshio Miyaoh, Tokyo, and Susumu Inamura, Utsunomiya, both of Japan, assignors to Ishikawa Gasket Co., Ltd., Tokyo, Japan
Filed May 21, 1996, Ser. No. 652,030
Claims priority, application Japan, May 31, 1995, 7-133620; May 31, 1995, 7-133621
Int. Cl.[6] **F16J** *15/08*
U.S. Cl. 277—235 B **10 Claims**

1. A metal laminate gasket for an internal combustion engine having a hole to be sealed, comprising:
a first metal plate having a main potion extending substantially throughout an entire area of the gasket, a curved portion extending from the main portion to define a first hole corresponding to the hole of the engine, and a flange extending from the curved portion and situated under a part of the main portion,
a second metal plate situated under the main portion and extending substantially throughout the entire area of the gasket, said second metal plate having a second hole in which said curved portion is located, an inner portion situated around the second

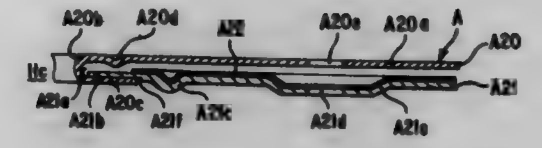

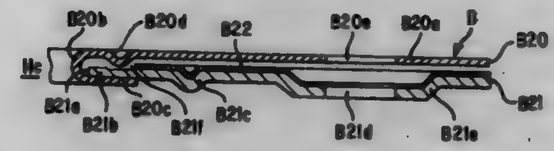

hole and disposed on the flange, and a recess formed in the inner portion around the second hole to form a thin portion, and
at least one bead formed on at least one of the first and second metal plate to surround the hole of the engine to seal the same, said at least one bead including a first bead formed on the first metal plate and extending toward the flange to be located on the inner portion, and a second bead formed on the second metal plate outside the inner portion and extending in a same direction as in the first bead, said first and second beads forming surface pressures to seal around the hole of the engine.

5,700,017
FLANGED RUBBER COMBUSTION SEAL
Paul M. Tensor, Lombard, Ill., assignor to Dana Corporation, Toledo, Ohio
Filed Sep. 26, 1996, Ser. No. 721,605
Int. Cl.[6] **F16J** *15/10*
U.S. Cl. 277—235 B **16 Claims**

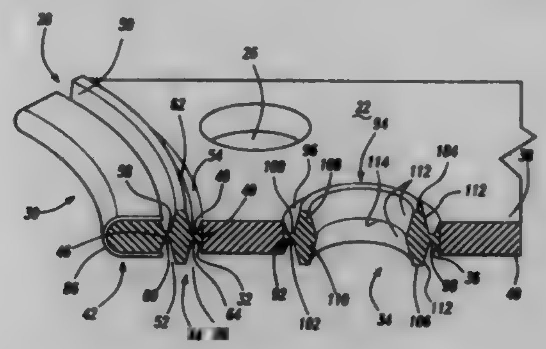

1. An annular elastomeric combustion seal comprising:
a radially innermost sealing section having a first axial thickness;
a radially outer sealing section contiguous with said radially innermost sealing section having a second axial thickness, said second thickness greater than said first thickness;
a first integral cantilevered section disposed between said inner sealing section and said outer sealing section;
a second integral cantilevered section extending radially outwardly from said outer sealing section; and
a plurality of grooves with roots, a first opposing pair of grooves formed between said outer sealing section and said inner sealing section by means of said first cantilevered section, and a second opposing pair of annular grooves formed between said outer sealing section and an outer radial edge of said second cantilevered section.

5,700,018
TOOL BIT CHUCK
Hans-Werner Bongers-Ambrosius, Iffeldorf, and Jörg Eichhorn, München, both of Germany, assignors to Hilti Aktiengesellschaft, Fürstentum, Liechtenstein
Filed Oct. 2, 1996, Ser. No. 724,809
Claims priority, application Germany, Oct. 9, 1995, 195 37 560.2
Int. Cl.[6] **B23B** *31/107;45/16*
U.S. Cl. 279—19.4 **3 Claims**

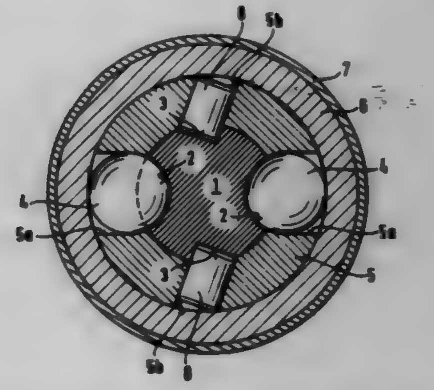

1. A tool bit chuck for an axially extending bit (1, 11) having a trailing end, said bit comprises at least one axially extending latching groove (2, 12) closed at the ends thereof spaced apart in the axial direction, and at least one axially extending rotary entrainment groove (3, 13) open at the trailing end of said bit, at least one latching element (4, 14) for engagement in said at least one latching groove and being supported in an axially extending receiving sleeve (5, 15) for radial displacement relative to said latching groove, at least one rotary entrainment element (8, 18) engageable in said at least one rotary entrainment groove (3, 13) for transferring torque to said bit, and said at least one rotary entrainment element (8, 18) being formed as a cylindrically shaped roll body rollable along a plane extending parallel to the axis of said receiving sleeve.

5,700,019
CHUCKING RING
James J. Anderson, 7336 Kilcullen Dr., Charlotte, N.C. 28270, assignor to James J. Anderson; Charlotte, N.C.
Filed Jun. 21, 1996, Ser. No. 667,641
Int. Cl.[6] **B23B** *31/16;13/12*
U.S. Cl. 279—154 **10 Claims**

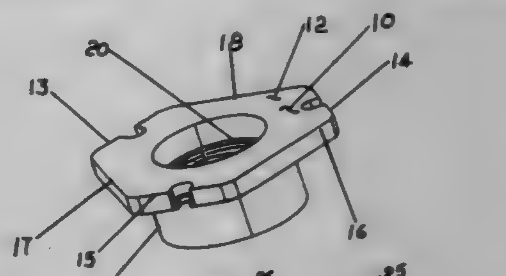

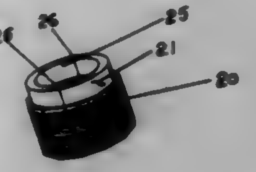

1. A chucking ring for use in a machine tool having a chuck, master jaws, top jaws and means for machining the top jaws preparatory to the top jaws chucking successive workpieces, the chucking ring comprising:
(a) a tubular body portion;

(b) a head at one end of the tubular body portion, the head including:
(i) a plurality of flanges extending radially from the head and
(ii) flat, relatively recessed peripheral portions of the head between the flanges; and
(c) means for attaching the chucking ring to the chuck; whereby the chucking ring may be moved to an active position with the flanges aligned with the master jaws for chucking of the chucking ring by the master jaws and to an inactive position with the flanges spaced from the master jaws.

5,700,020
SNOWMOBILE STEERING SKI
James K. Noble, 743 Iona Rd., Idaho Falls, Id. 83401
Continuation of Ser. No. 106,344, Aug. 12, 1993, abandoned. This application Jun. 17, 1996, Ser. No. 664,808
Int. Cl.⁶ B62B *17/02*
U.S. Cl. 280—28 **20 Claims**

1. An improved snowmobile ski for attachment to the steering mechanism of a snowmobile comprising:
an elongated member having a turned-up front end and an aft end, wherein said member has:
a bottom running surface extending from the turned up front end to the aft end; and
an upper surface having means for attachment directly or indirectly to the steering mechanism of a snowmobile; and
a keel molded as a part of said member and protruding from the bottom running surface of said ski, said keel being substantially the same length as said running surface and having a generally curved shape along its lower edge with its maximum protrusion proximate that portion of the ski which is structured to be below the steering attachment of the snowmobile, said keel protrusion diminishing in both fore and aft directions from said keel maximum protrusion to a substantially zero protrusion at its fore and aft ends.

5,700,021
MOBILE CART
Colin C. Leatherbury, Batesville, Ind., and Donavan O. Kerr, Cincinnati, Ohio, assignors to C.C. Leatherbury, Inc., Batesville, Ind.
Filed Aug. 9, 1995, Ser. No. 513,001
Int. Cl.⁶ B62B *3/00*
U.S. Cl. 280—47.35 **22 Claims**

1. A mobile cart comprising:
a frame including a lower base portion, an upper platform portion vertically spaced from said lower base portion, a connecting portion extending between and attached to said lower base portion and said upper platform portion, and a handle portion attached to said upper platform portion, said handle portion including a generally horizontally extending upper tubular member;
a basket attached to said upper platform portion and vertically spaced from said lower base portion, said basket being operable for receiving articles from an operator of said cart; and
a plurality of casters mounted on said lower base portion; wherein
said connecting portion extends upward solely from a first end of said lower base portion and said platform portion is cantilevered from an upper portion of said connecting portion;

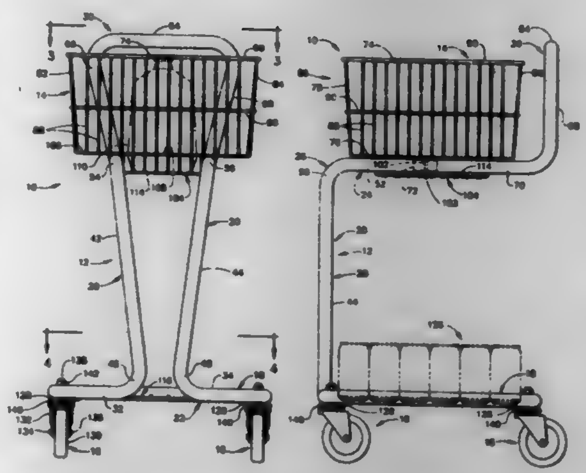

said lower base portion and said upper platform portion are connected solely by said connecting portion;
said connecting portion further includes a substantially vertical riser portion extending between and attached to said lower base portion and said upper portion of said connecting portion;
said riser portion is disposed forward of said basket and said upper tubular member of said handle portion is disposed rearward of said basket;
said frame is configured so as to dispose said basket at a comfortable working height for the operator of the cart, to provide the operator easy access to said lower base portion, and to maximize a space existing between said basket and said lower base portion.

5,700,022
MULTIFUNCTIONAL COLLAPSIBLE SHIELD
Lawrence M. Finnson, 9384 Odell Rd., Blaine, Wash. 98230
Filed Jan. 2, 1996, Ser. No. 581,848
Int. Cl.⁶ B62D *25/16*
U.S. Cl. 280—152.3 **9 Claims**

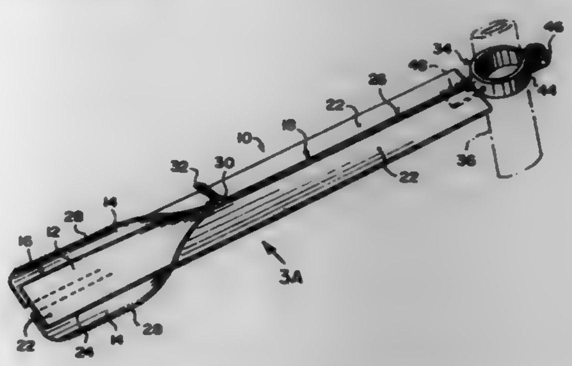

1. A multifunctional collapsible shield comprising:
a) an elongated sheet having opposed longitudinal edges;
b) a pair of elongated panels, each elongated panel having inner and outer longitudinal portions with a longitudinal center therebetween;
c) means for attaching each longitudinal edge of said elongated sheet to the longitudinal center of each said elongated panel;
d) a zipper attached to opposite longitudinal edges of the inner portions of said pair of elongated panels, the inner portions being joined together and the elongated sheet being deformed along it's longitudinal length when the zipper is closed so that the elongated sheet in combination with the inner portions form a structural tube with the outer portions of the elongated panels extending away from the formed structural robe to function as guard members, and the inner portions being

separated when the zipper is opened to permit the elongated sheet and the longitudinal panels to assume a rolled configuration; and
e) means for securing a forward end of the formed structural tube to a seat post of a seat on a bicycle, said formed structural tube being sufficiently rigid when the zipper is closed to permit a rearward end portion of the formed structural tube to extend unsupported over a rear wheel of the bicycle to act as a fender.

5,700,023
VEHICLE FORMED FROM A SERIES OF MODULES INTERCONNECTED BY A COMPOSITE ARTICULATED CONNECTION
Antoine Picard, Obernai, France, assignor to Lohr Industrie, Hangenbieten, France
PCT No. PCT/FR94/00440, § 371 Date Nov. 29, 1995, § 102(e) Date Nov. 29, 1995, PCT Pub. No. WO94/23985, PCT Pub. Date Oct. 27, 1994
PCT Filed Apr. 19, 1994, Ser. No. 532,570
Claims priority, application France, Apr. 19, 1993, 93 04731
Int. Cl.⁶ B62D *53/00*
U.S. Cl. 280—426 **12 Claims**

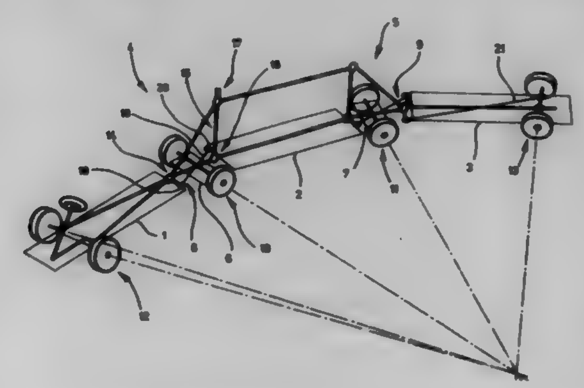

1. An articulated vehicle having a plurality of modules interconnected with one another in an articulated manner, said articulated vehicle comprising:
a leading module (1) having a leading end, a trailing end and a front steering set of wheels (12), a rear module (3) having a leading end, a trailing end and a rear set of follower wheels (13), and at least one intermediate module (2) having a leading end and a trailing end and being located between said leading module (11) and said rear module (3);
wherein each pair of two adjacent modules is interconnected by a composite articulated connection (4, 5); and
each said composite articulated connection (4, 5) comprises:
at least one movable articulation support (6, 7) which is supported by an axle (10, 11), said movable articulation support is connected to a leading one of said pair of adjacent modules by a front connection articulation (14) and a trailing one of said pair of adjacent modules by a rear connection articulation (16) having three degrees of freedom, said front connection articulation (14) is connected at a median position to the trailing end of said leading one of said pair of adjacent modules, and said rear connection articulation (16) is connected at a median position to the leading end of said trailing one of said pair of adjacent modules;
an oblique articulated connection (8, 9) extends obliquely with respect to a longitudinal axis of said articulated vehicle when said pair of adjacent modules are aligned with one another, said oblique articulated connection (8, 9) has a leading end and a trailing end, said oblique articulated connection leading end is connected at position that is offset from the median position of the trailing end of said leading one of said pair of adjacent modules, and said oblique articulated connection trailing end is connected to the leading end of said trailing one of said pair of adjacent modules at a position diagonal opposite offset with respect to said connected position of said oblique articulated connection leading end; and
a double articulated connection (15) is formed by a connection between said rear connection articulation (16) and a top articulation (17) which has limited movement, and said front connection articulation (14) and said top articulation (17) are interconnected with one another by structure of said moveable articulation support (6, 7).

5,700,024
COUPLER LOCKING DEVICE AND METHOD
James W. Upchurch, 26 Harbour La., Ringgold, Ga. 30736
Filed Sep. 22, 1995, Ser. No. 532,085
Int. Cl.⁶ B60D *1/60*
U.S. Cl. 280—507 **14 Claims**

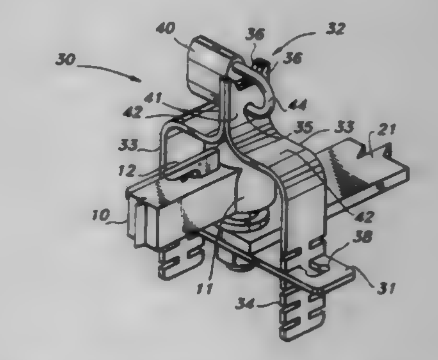

1. A coupler locking device which can be affixed to a coupler mechanism of a trailer of the type having a socket and a stud-type hitch ball inserted therein, and capable of being releasably affixed to a towing platform of a towing vehicle, said coupler locking device comprising;
(a) a bracket member having a medial guarding section and a plurality of distal fastening sections, said bracket member further comprising at least two bracket arms, each having a proximate mating section, a medial guarding section and a distal fastening section;
(b) at least one joining member for releasably connecting the distal fastening sections of said bracket member so that when the joining member is coupled to said distal fastening sections around the coupler mechanism of a trailer, the stud-type hitch ball inserted in the socket of said coupler mechanism is entrapped therein; and
(c) at least one locking device for looking said joining member to said distal fastening sections.

5,700,025
VEHICLE SUSPENSION SYSTEM FOR A STEERABLE WHEEL
Un Koo Lee, Kyungki-do, Rep. of Korea, assignor to Hyundai Motor Company, Seoul, Rep. of Korea
PCT No. PCT/KR95/00062, § 371 Date Dec. 6, 1996, § 102(e) Date Dec. 6, 1996, PCT Pub. No. WO96/37375, PCT Pub. Date Nov. 28, 1996
PCT Filed May 22, 1995, Ser. No. 750,376
Int. Cl.⁶ B62D *17/00*
U.S. Cl. 280—661 **5 Claims**

1. A vehicle suspension system for a steerable wheel comprising:
a wheel carrier rotatably supporting a wheel;
camber regulating means which is disposed on car body side ends of a control arm for pushing or pulling said control arm to a wheel side thereby regulating a camber angle;

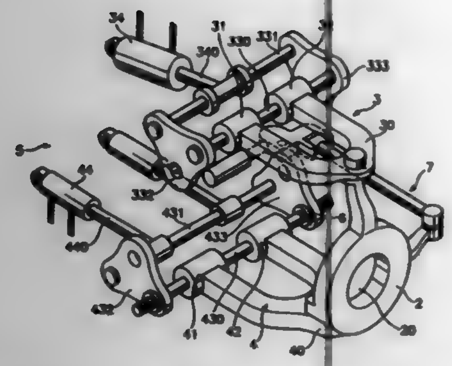

caster regulating means which is disposed on the car body side ends of said control arm for moving said control arm to a front and a rear of the vehicle thereby regulating a caster angle;

toe regulating means which is connected with said wheel carrier thereby regulating a toe;

sensors sensing a driving state of the vehicle; and

an electronic control unit for receiving signals from said sensors and controlling said camber regulating means, said caster regulating means and said toe regulating means.

5,700,026

VEHICLE BODY LOWERING SYSTEM

Wojciech T. Zalewski, Belmont; Guy Steele, Shrewsbury, both of Mass., and Christopher J. MacKenzie, Chandler, Ariz., assignors to Safe-T-Vans, Inc., Cambridge, Mass.

Continuation-in-part of Ser. No. 387,474, Feb. 13, 1995, Pat. No. 5,573,266. This application Nov. 8, 1996, Ser. No. 745,296

Int. Cl.[6] B60G *11/26*

U.S. Cl. 280—704 **20 Claims**

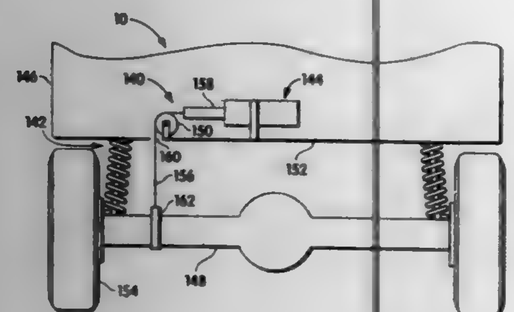

1. In a motor vehicle having a carriage including at least one axle and an axle housing, a load compartment body having a floor, and a spring suspension component at each of said axles for the buoyant support of said body above said carriage between a lower position and an upper position, an assembly for facilitating ingress and egress of a load from said motor vehicle, said assembly comprising:

(a) a hydraulic cylinder having a shell and a piston extending from a first end of said shell, said shell being mounted within said body;

(b) a power source;

(c) a manually actuated control for energizing and deenergizing said power source;

(d) a flexible, substantially constant length line connected at one end to an end of said piston, extending through an opening in said body floor, and attached to said axle housing such that, when said power source is deenergized, said vehicle body is freely subject to said buoyant support; and

(e) whereby, when said assembly is activated, said piston retracts into said shell, pulling said line, and causing said spring suspension component to compress, thus lowering said vehicle body at said axle.

5,700,027

ROTARY ACTUATOR

Stefan Schiffler, Schonungen, Germany, assignor to Fichtel & Sachs AG, Schweinfurt, Germany

Filed Nov. 24, 1995, Ser. No. 562,476

Claims priority, application Germany, Nov. 26, 1994, 44 42 223.7

Int. Cl.[6] B60G *11/26*

U.S. Cl. 280—723 **17 Claims**

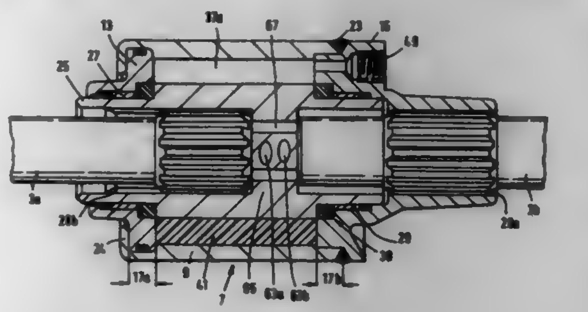

1. A vehicular suspension system comprising:

a hydraulic rotary actuator;

said hydraulic rotary actuator comprising a body;

said body of said hydraulic rotary actuator comprising a first member and a second member;

at least one of said first member and said second member being rotatable with respect to the other of said first member and said second member;

said at least one of said first member and said second member being rotatable about an axis of rotation with respect to the other of said first member and said second member by hydraulic fluid under pressure;

a first stabilizer bar;

a second stabilizer bar;

a first hole and a second hole being disposed substantially within said body;

said first hole comprising means for preventing insertion of said first stabilizer bar into said body beyond a first distance;

said second hole comprising means for preventing insertion of said second stabilizer bar into said body beyond a second distance;

each said means for preventing insertion comprising a substantially continuous bottom in its corresponding hole;

each said first hole and said second hole having a first end and a second end;

each said first end comprising an opening; and

each said second end comprising said substantially continuous bottom disposed opposite said opening of said corresponding first end.

5,700,028

AIR BAG MODULE WITH ENERGY ABSORBING MOUNTING BRACKET

Jeffrey Allen Logan, Union; John Clifford Hattery, Jr., Dublin; John Paul Sparkman, Dayton, and David Allan Pray, Tipp City, all of Ohio, assignors to General Motors Corporation, Detroit, Mich.

Continuation-in-part of Ser. No. 618,322, Mar. 19, 1996. This application May 16, 1996, Ser. No. 649,040

Int. Cl.[6] B60R *21/20*

U.S. Cl. 280—728.2 **14 Claims**

1. An air bag module in a vehicle comprising:

an inflator for generating inflator gas;

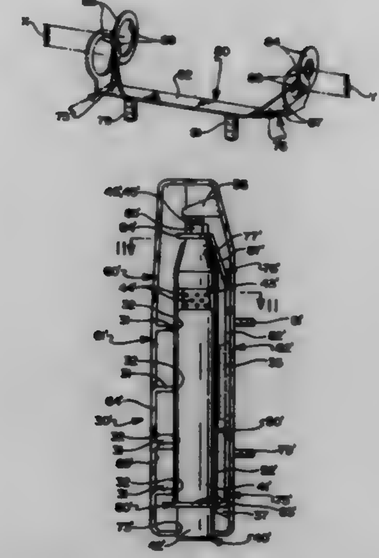

an air bag deployable upon generation of inflator gas, the air bag secured to the inflator;

a mounting bracket attached to the inflator, the mounting bracket adapted to secure the inflator to the vehicle; and

the inflator including opposing ends and the mounting bracket having a central portion secured to the vehicle, the mounting bracket having first and second cantilevered portions, each of the cantilevered portions extending outwardly from the central portion and engaging an end of the inflator, the cantilevered portions each having a predetermined strength such that the cantilevered portions each deform in the direction of the deploying air bag such that the mounting bracket absorbs energy during air bag inflation by predetermined deformation of the cantilevered portions.

5,700,029

AIRBAG MODULE MOUNTING BRACKET WITH BENDABLE MOUNTING ARMS

Mark L. Enders, Ogden, Utah, assignor to Morton International, Inc., Chicago, Ill.

Filed Oct. 1, 1996, Ser. No. 724,444

Int. Cl.[6] B60R *21/22*

U.S. Cl. 280—728.2 **20 Claims**

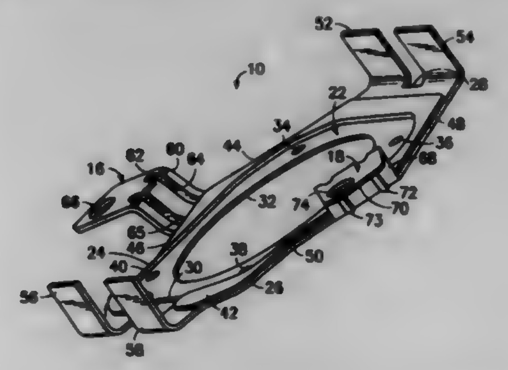

1. An airbag module mounting bracket for mounting an airbag module within a steering wheel assembly in a vehicle, the airbag module having an inflatable airbag cushion and a cylindrical airbag inflator extending out of a bottom surface of the airbag module, the airbag module mounting bracket comprising:

a main body plate securable to the bottom surface of the airbag module and defining a generally circular inflator-receiving aperture for fitting around the cylindrical airbag inflator of the airbag module, the generally circular inflator-receiving aperture having a center point; and

the mounting bracket attachable to the steering wheel assembly at only two spaced-apart, opposing attachment points, with the attachment points positioned so that an imaginary straight line intersecting both attachment points is radially offset from the center point of the inflator-receiving aperture of the main body plate, a portion of the mounting bracket between the imaginary straight line and the center point of the inflator-receiving aperture being rigid yet bendable under torque caused by inflation of the airbag cushion in the airbag module.

5,700,030

INFLATOR WITH COMBUSTION CHAMBER PRESSURE REGULATOR

George W. Goetz, Rochester Hills, Mich., assignor to TRW Vehicle Safety Systems Inc., Lyndhurst, Ohio

Filed Dec. 27, 1995, Ser. No. 580,438

Int. Cl.[6] B60R *21/26*

U.S. Cl. 280—736 **6 Claims**

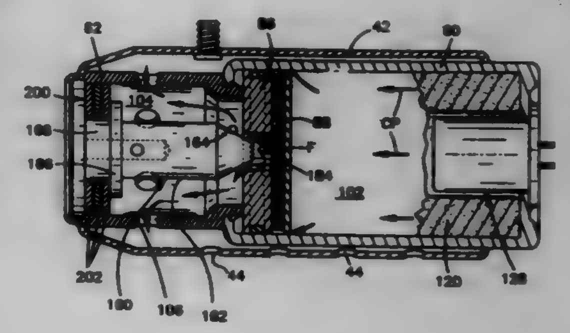

1. An apparatus for inflating an inflatable vehicle occupant protection device, said apparatus comprising:

a housing having a wall at least partially defining a combustion chamber, said wall having an opening through which fluid flows from the combustion chamber to inflate the protection device;

ignitable material located in the combustion chamber to produce, upon ignition, combustion products to increase the pressure in the combustion chamber;

a valve member movable between a first position blocking flow of fluid from the combustion chamber through the opening in said wall and a second position allowing the flow of fluid from the combustion chamber through the opening in said wall;

biasing means urging said valve member toward the first position, said valve member having a portion against which the pressure in the combustion chamber acts to move said valve member from the first position toward the second position in response to pressure in the combustion chamber increasing above a predetermined pressure; and

a flow directing plate and a filter in the combustion chamber between said ignitable material and said wall of said housing, said filter being located between said wall and said plate, said plate having a peripheral edge surface spaced from said housing to define a fluid flow path between said housing and said peripheral edge surface of said plate.

5,700,031
SUBASSEMBLY COMPRISING A STEERING WHEEL, A STEERING SHAFT AND A GAS GENERATOR
Alexander Heilig, Wangoldingen, Germany, and Dante Bigi, Mutlangen, Italy, assignors to TRW Occupant Restraint Systems GmbH, Alfdorf, Germany
Filed Oct. 15, 1996, Ser. No. 729,946
Claims priority, application Germany, Oct. 20, 1995, 29516621 U
Int. Cl.^{6} B60R *21/16*
U.S. Cl. 280—731 **6 Claims**

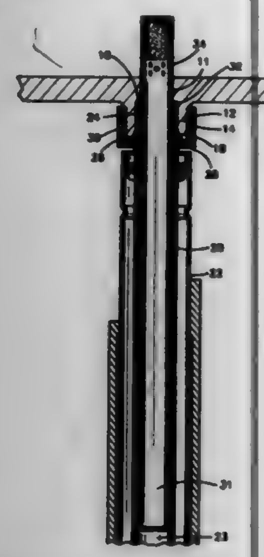

1. A subassembly comprising a steering wheel, a steering shaft connected to said steering wheel for joint rotation, a gas bag accommodated in said steering wheel and a gas generator for inflation of said gas bag;

said steering shaft having a cavity extending along a longitudinal axis of said steering shaft and opening at least at an end thereof which is adjacent to said steering wheel, said steering wheel having a hub and an opening therein through which said cavity is in fluid communication with said opening;

said gas generator being arranged within said cavity and having an elongated housing;

said gas generator being axially held in said cavity;

said steering shaft having an end face forming a support surface on said end thereof adjacent to the steering wheel, a clamping face being formed by a surface which surrounds said opening of said steering wheel on an outer side of said hub, and said gas generator housing being provided with a radially outwardly extending collar which is secured between said clamping face and said support surface.

5,700,032
SUPPORTING APPARATUS FOR A STEERING COLUMN
Yuichiro Fukunaga, Gunma-ken, Japan, assignor to NSK, Ltd., Tokyo, Japan
Filed Dec. 29, 1995, Ser. No. 581,342
Claims priority, application Japan, Feb. 3, 1995, 7-017224
Int. Cl.^{6} B62D *1/18*
U.S. Cl. 280—775 **3 Claims**

1. Steering column supporting apparatus comprising:

a steering column with a steering wheel connection portion provided at a rear end of said steering column;

a fixed bracket supported on and fixed to a vehicle body, said fixed bracket having a pair of left and right support plate portions disposed toward the rear end of said steering column;

a connecting portion connecting lower ends of said support plate portions together; and

a spacer made of synthetic resin which is resiliently pressed between inner sides of said left and right support plate portions and a left and a right side, respectively, of said steering column so as to substantially immovably fix said steering column relative to said fixed bracket.

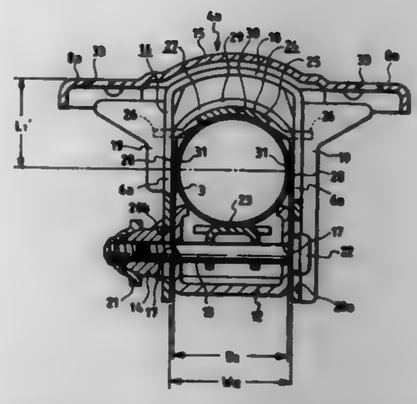

5,700,033
REMOVABLE CROSS MEMBER FOR VEHICLE FRAME
John A. Beckman, Wernersville, Pa., assignor to Dana Corporation, Toledo, Ohio
Filed May 31, 1996, Ser. No. 657,879
Int. Cl.^{6} B62D *21/00*
U.S. Cl. 280—795 **8 Claims**

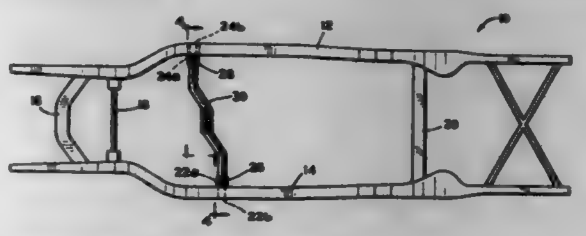

1. A frame for a vehicle comprising:

a first siderail and a second siderail, said first siderail and second siderail extending axially with respect to the length of the vehicle and generally parallel with respect to each other, each of said first siderail and said second siderail having an aperture which extends therethrough from an inner side of each siderail to an outer side of each siderail, said first siderail aperture being located at an axial position which is offset from said second siderail aperture;

at least one cross member, said cross member extending in a generally perpendicular direction between said first and second siderails and being secured to said siderails; and

an auxiliary cross member having a first end and a second end which are parallel, but offset from each other, and a central portion which extends at an angle between said first end and said second end, said first end being positioned in said first siderail aperture and said second end being positioned in said second siderail aperture such that said auxiliary cross member extends between said first siderail and said second siderail.

5,700,034
VEHICLE SAFETY APPARATUS WITH SELECTIVE ENERGY MANAGEMENT
Wendell C. Lane, Jr., Romeo, Mich., assignor to TRW Vehicle Safety Systems Inc., Lyndhurst, Ohio
Filed Sep. 1, 1995, Ser. No. 522,730
Int. Cl.^{6} B60R *22/28*
U.S. Cl. 280—805 **13 Claims**

1. A vehicle occupant safety apparatus comprising:

a length of seat belt webbing extensible about a vehicle occupant to help protect the vehicle occupant;

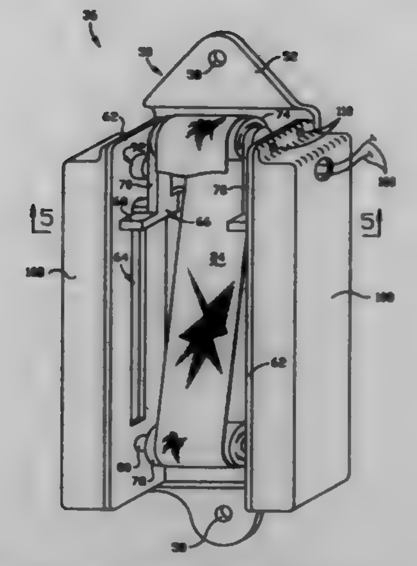

a retractor on which said belt webbing is wound;

a base fixed in position relative to said retractor;;

a first roller supported on said base for rotation relative to said base about a first axis, said first axis being fixed relative to said base;

a second roller supported on said base for rotation relative to said base about a second axis spaced apart from said first axis, said second roller and said second axis being movable along said base in a direction toward said first roller;

said belt webbing extending around said first and second rollers in an S-shaped pattern;

electrically controlled blocking means engageable with said second roller, said blocking means having a first condition blocking movement of said second roller toward said first roller; and

sensor means for detecting a condition indicative of a vehicle collision and for providing an electric release signal to said blocking means in response to sensing the condition;

said blocking means being releasable in response to said electric release signal to enable movement of said second roller along said base toward said first roller to pay out webbing from said first and second rollers.

5,700,035
FORCE LIMITER FOR VEHICLE SAFETY BELT SYSTEMS
Heinz Bock, Heubach, Germany, assignor to TRW Occupant Restraint Systems GmbH, Alfdorf, Germany
Filed Dec. 14, 1995, Ser. No. 572,004
Claims priority, application Germany, Dec. 19, 1994, 44 45 322.1
Int. Cl.^{6} B60R *22/28*
U.S. Cl. 280—805 **6 Claims**

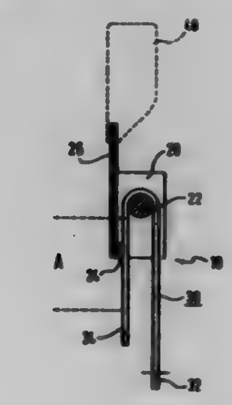

1. An apparatus for limiting a force applied by a seat belt webbing to an occupant of a vehicle which arises in the event of a vehicle collision due to movement of the occupant against the seat belt webbing creating a tensile force in the seat belt webbing, said apparatus comprising:

a metal frame having a U-shape formed by a base plate and a pair of spaced apart side plates, said base plate including first and second end portions;

said base plate including a support which extends adjacent said second end portion of said base plate between said pair of side plates;

a stationary cylindrical deflection pin extending between said pair of side plates, said deflection pin being spaced from said base plate and being located intermediate said first and second end portions of said base plate; and

a metal strip having first and second end portions and opposing first and second flat side surfaces, said strip extending approximately 180° around said deflection pin such that said first and second end portions of said strip lie parallel to one another and are spaced apart, said first flat side surface engaging said deflection pin and said second flat side surface engaging said support on said base plate;

said first end portion of said base plate being connected with the seat belt webbing to transmit the tensile force in the seat belt webbing as well as movement of the seat belt webbing caused by the occupant moving against the seat belt webbing into relative movement between said frame and said strip;

said first flat side surface of said strip being frictionally slidable on said deflection pin in response to relative movement of said frame and said strip to dissipate a portion of the tensile force in the seat belt webbing;

said support on said base plate engaging and guiding said second flat side surface of said strip during relative movement of said frame and said strip;

said strip being plastically deformed upon relative movement of said frame and said strip to further dissipate the tensile force in the seat belt webbing.

5,700,036
IDENTIFICATION PROTECTIVE COVER
Steele C. Smith, III, 17712 Lewis La., Huntington Beach, Calif. 92647
Filed Feb. 26, 1996, Ser. No. 606,962
Int. Cl.^{6} B42D *15/10;* **G11B** *3/00*
U.S. Cl. 283—72 **12 Claims**

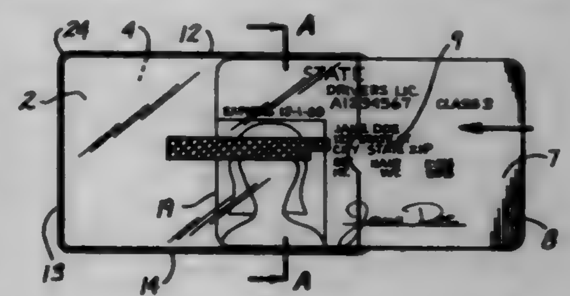

1. An insert identification protective cover in a range of sizes, comprising:

a first flexible conformable polymeric sheet forming a front sheet having a generally planar surface, the front sheet comprising outer peripheral edges;

a second flexible conformable polymeric sheet forming a rear sheet having a generally planar surface, the rear sheet comprising outer peripheral edges, the outer peripheral edges of the rear sheet continuously bonded to the outer peripheral edges of the front sheet, leaving an edge open to form a pocket between the front sheet and rear sheet for receiving an insert; and

an opaque material permanently applied on a planar surface of the protective cover, the opaque material defining a specific

shape, positioned on the planar surface so as to block off from view selected information printed on the insert to prevent public disclosure of information on the insert.

5,700,037
SECURITY IMPROVED CARD
John A. Keller, 37 79th St., Sea Isle, N.J. 08243
Filed Jan. 16, 1996, Ser. No. 587,335
Int. Cl.[6] B42D *15/10*
U.S. Cl. 283—107 32 Claims

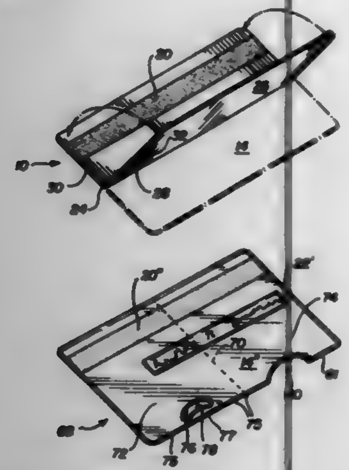

1. A security improved card comprising:
(a) a semirigid plastic card member comprising a length, parallel lengthwise edges, a width, parallel widthwise edges, a front face, and a rear face,
(b) at least one strip on the rear face comprising means to encode a readable message in the strip, and
(c) bending means permanently and integrally formed with the card member and disposed along at least one straight line across a face of the card member parallel with at least one edge, said means providing reduced resistance to bending along said straight line to allow the card to be folded over and cover the strip repeatedly.

5,700,038
PIPE CONNECTION ASSEMBLY
Boyd Greene, and Naji Nassif, both of Memphis, Tenn., assignors to Gaesys, Inc., Memphis, Tenn.
Filed Oct. 18, 1996, Ser. No. 733,794
Int. Cl.[6] F16L *11/12*
U.S. Cl. 285—54 11 Claims

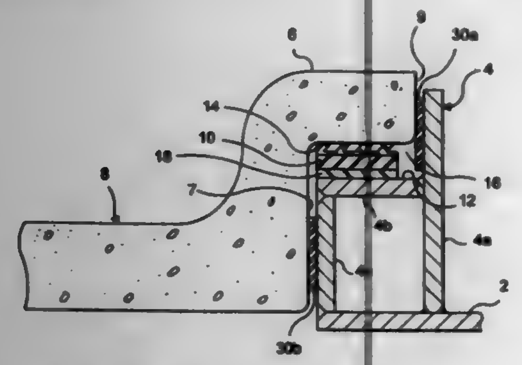

1. A connector assembly for connecting a first end portion of a first pipe to a second end portion of a second pipe, the connector assembly comprising
a mandrill for attachment to the first end portion comprising
a flange extending radially from an outside circumference of the first end portion to face at least a portion of an end face of the second end portion,
an axial tubular extension extending from the flange toward the open end of the first end portion so as to, upon assembly, reach a point approximately equal to an axial end point of the first pipe, and axially overlap at least a portion the second end portion creating an annular space therebetween, and
a sealing gasket, formed of an electrically insulating material, comprising
a base in the form of a tubular collar for residing fittingly and circumferentially about the axial extension, and
at least one annular fin projecting radially from the base at an angle with respect thereto, said fin being rotatable inwardly about said angle towards the base and being biased outwardly about said angle, and said fin being substantially inflexible along its radial width.

5,700,039
EXHAUST PIPE TO HOSE ADAPTER FOR VERMIN EXTERMINATION
Michael J. Manning, P.O. Box 725, Danville, Calif. 94526
Filed Apr. 4, 1996, Ser. No. 627,390
Int. Cl.[6] F16L *19/02*; A01M *13/00*
U.S. Cl. 285—148.23 18 Claims

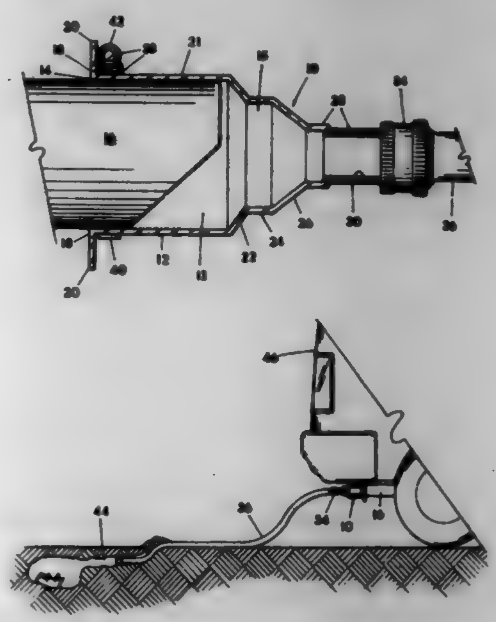

10. An exhaust pipe adapter for connecting a conventional garden water hose to an internal combustion engine exhaust pipe of a vehicle for purposes of exterminating underground dwelling vermin by exhaust fumes directed through the garden water hose into an underground dwelling of the vermin; said adapter comprising;
a tubular body,
said tubular body open therethrough and having
a first end opening and a second end opening oppositely disposed from said first end opening,
said first end opening defined by an open tubular structure having threads properly sized and positioned for cooperative threaded engagement with a conventional threaded fitting on an end of a conventional garden water hose;
said second end opening defined by an annular flexible wall of said tubular body; said second end opening sized for receiving an exhaust pipe terminal end so as to allow placement of the pipe terminal end in said tubular body; said wall being sufficiently flexible to allow said wall to be squeezed inward by adjustable band means encircling an exterior surface of said wall for tightening and securing said tubular body to an exhaust pipe terminal end;
said tubular body including multiple interior diameters defined by diametric changes in said wall with a larger interior diameter adjacent said second end opening, and a smaller interior diameter positioned between said larger interior diameter and said open tubular structure having threads.

5,700,040
FLUID QUICK CONNECTOR
Rick A. Kujawski, Macomb, Mich., assignor to Bundy Corporation, Warren, Mich.
Filed Feb. 23, 1995, Ser. No. 392,498
Int. Cl.[6] F16L *39/00*
U.S. Cl. 285—319 10 Claims

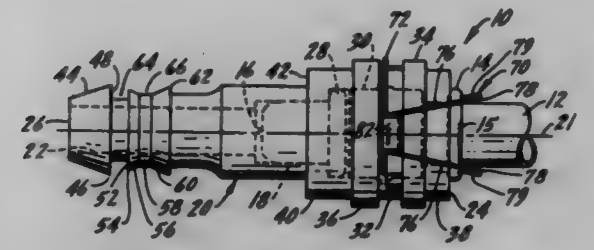

1. A quick connector coupling comprising:
a hollow female connector body extending between a male member connection end and a hose connection end and including an annular groove formed in an exterior surface; a male member received in said connector body and having an enlarged annular upset; a retainer associated with said connector body and securing said male member in said connector body, said retainer including a semi-circular base disposed in said groove to secure said retainer to said connector body and at least one locking loop extending from said base and beyond said male member connection end and encircling a portion of said upset.

5,700,041
RADIALLY ENGAGEABLE LEAKPROOF COUPLING
Michel Andre, Romorantin Lanthenay, and Pascal Detable, Gievres, both of France, assignors to Etablissements Caillau, Issy les Moulineaux, France
Filed Jun. 21, 1996, Ser. No. 668,242
Claims priority, application France, Jun. 30, 1995, 95 07902
Int. Cl.[6] F16L *17/06*
U.S. Cl. 285—325 3 Claims

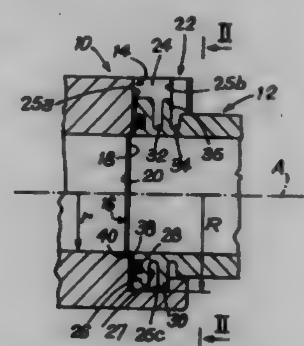

1. A sealed coupling comprising first and second tubular endpieces each having an end provided with an orifice, beyond its own end, the first endpiece has a U-shaped axial extension provided with a transverse groove with a bottom that comprises a semicircular portion of a radius greater than a radius of the orifice of the first endpiece, together with two rectilinear portions situated at opposite ends of said semicircular portion, said groove having a first radial wall situated adjacent to the end of the first endpiece and a second radial wall facing the first, the end of one of the endpieces being provided with a circular sealing gasket that projects axially beyond said end and that comings into sealing contact with the end of the other endpiece, the second endpiece being provided with a substantially circular radially outwardly extending flange and with a radial collar that is resiliently flexible in an axial direction and that has a radial face facing away from the end of said second endpiece, said flange, together with said radial collar, engaged into the groove during relative transverse displacement of the two endpieces for the purpose of coupling said endpieces together, said radial face of the radial collar bearing against the second radial wall of the groove when the flange and the radial collar are engaged in said groove, one of the first and second endpieces having an axial projection situated in the vicinity of the edge of the orifice thereof, while the other of said endpieces has an axial setback situated in the vicinity of the edge of the orifice thereof, said setback receiving said axial projection when the endpieces are in a coupled-together position, said axial projection cooperating with the end of said other endpiece during an engagement stroke of the flange and the radial collar into the groove so that said radial collar is resiliently urged in a direction increasing separation between the ends of the two endpieces and is received in said axial setback under an effect of resilience of the radial collar at the end of said engagement stroke.

5,700,042
TORSIONALLY-BIASED LATCH ARRANGEMENT
Mark W. Weadon, Raleigh, and Gregory S. Patterson, Morrisville, both of N.C., assignors to Ericsson, Inc., Research Triangle Park, N.C.
Filed Jul. 24, 1996, Ser. No. 685,479
Int. Cl.[6] E05C *19/06*
U.S. Cl. 292—80 17 Claims

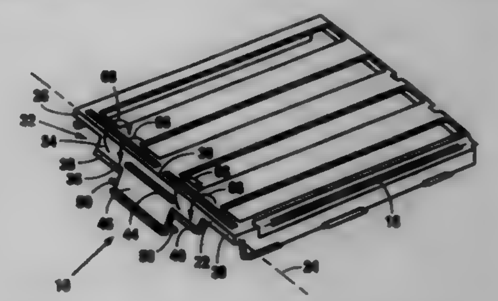

1. A cover having a torsionally-biasable latch adapted to maintain the cover in a fixed relationship with a housing, said latch comprising:
an elongated beam having a predetermined length, a longitudinal axis extending along said length, and spaced apart end portions disposed at opposed ends of said beam and providing separate, spaced apart connection points between said beam and said cover;
a flange integrally formed with said beam and having a first side coterminous with said beam, a second side spaced from said first side and having at least one edge surface adapted to engage a respective mating surface provided on said housing when said cover is assembled with said housing, and an elongated slot disposed between said first and second sides in a direction parallel with the longitudinal axis of said beam;
wherein said flange is predisposed in fixed radial relationship with respect to the longitudinal axis of said elongated beam such that when the cover is assembled with said housing the edge surface disposed on the second side of said flange is displaced by the respective mating surface of said housing by a distance sufficient to cause said beam to twist about said longitudinal axis in a first direction and produce a torsional force in said beam acting in a direction opposite to said first direction, said force being sufficient to forcibly maintain said

at least one edge surface of the flange in engagement with said mating surfaces of the housing when said cover is assembled with said housing.

5,700,043
DISCONNECTABLE CONNECTING DEVICE FOR TWO COMPONENTS WITH A NON-CIRCULAR OUTLINE, PARTICULARLY OVAL

Michel Rohard, Houssay, and Charles Glachet, Vendome, both of France, assignors to La Calhene, Velizy Villacoublay, France

Filed Jun. 5, 1996, Ser. No. 658,347
Claims priority, application France, Jun. 9, 1995, 95 06838
Int. Cl.[6] B65D *45/30*
U.S. Cl. 292—256.6 **10 Claims**

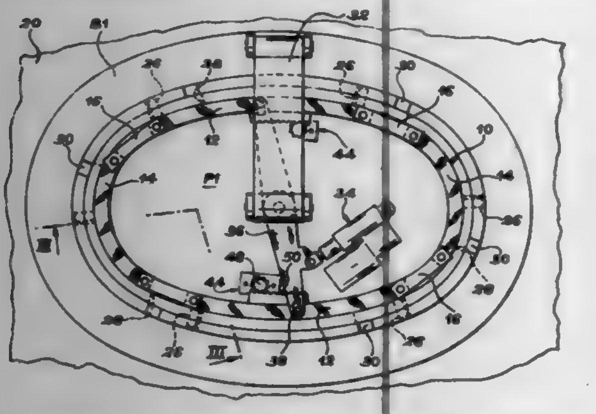

1. A disconnectable connecting device for two components, this device comprising:
a ring having a non-circular shape, said ring including at least three segments arranged in end to end relationship along said non-circular shape, with spaced apart adjacent ends, and linkage components articulated only on said adjacent ends of the consecutive segments, for linking said segments and ensuring a space between said adjacent ends;
linkage and guidance means for having the segments supported by a first of said components, said means guiding the segments along a displacement direction following said non-circular shape, between two extreme positions; and
connecting means for being placed between the ring and a second of said components, capable of being respectively in an interlocking condition and an unlocking condition, when the ring is in said extreme positions.

5,700,044
DOOR LATCH OPERATOR

George Wartian, 34938 Island View Dr., E., Mt. Clemens, Mich. 48045

Filed Sep. 11, 1996, Ser. No. 712,356
Int. Cl.[6] E05B *3/00*
U.S. Cl. 292—336.3 **1 Claim**

1. Door latch operating mechanism for retracting a door latch, comprising:
a solid brass handle having upper and lower end portions formed with front faces attachable to the surface of a door and having a vertical hand grip portion between the upper and lower end portions spaced rearwardly from said front faces and away from the surface of the door,
said upper end portion being in the form of a hollow housing having a chamber therein,
said hand grip portion being generally U-shaped in cross-section defining an elongated vertical channel which opens forwardly and communicates at one end with said chamber,
a solid brass lever adapted to operate said door latch,

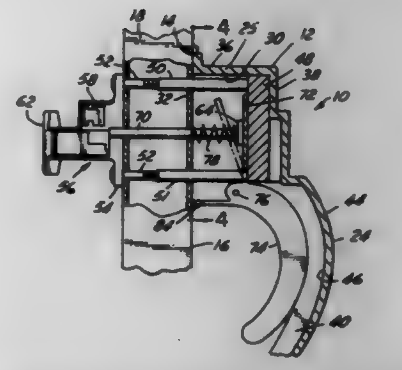

said lever being pivoted in said housing on a pivot pin extending across said chamber whereby said lever extends downwardly from said pivot pin into said channel in said hand grip portion to a position where it may be squeezed and rotated from a withdrawn position to a latch retracting position by a hand on the hand grip portion,
means for securing said housing to the door including a mounting block affixed within said chamber,
means for securing the lower end portion of said handle to the door,
said housing having a bottom wall and said chamber having an opening through said bottom wall which extends in continuation of said channel, and said lever has an integral flange closing said opening in the withdrawn position thereof, and
said mounting block being completely concealed in said housing when said handle is secured to the surface of the door and the lever is in the withdrawn position.

5,700,045
UNIVERSAL QFP TRAY TRANSFER METHOD

David Ganapol, Scotts Valley, and Gary Small, Los Gatos, both of Calif., assignors to VLSI Technology, Inc., San Jose, Calif.
Continuation-in-part of Ser. No. 78,529, Jun. 15, 1993, abandoned. This application Jul. 9, 1996, Ser. No. 677,150
Int. Cl.[6] B66C *1/02*
U.S. Cl. 294—64.1 **6 Claims**

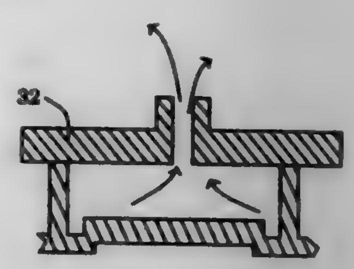

1. A method for transferring a semiconductor carrier tray having individual cups and wells, said semiconductor carrier tray being transferred from a first location to a second location, said method comprising:
(a) positioning a cap member to contact at least one individual cup of a semiconductor carrier tray; wherein said cup includes a base portion, and a plurality of wall portions having upper surfaces, said cap member directly contacting the upper wall surfaces of the individual cup to provide a capped cup;
(b) evacuating atmosphere from the capped cup to provide a partial vacuum within the cup, wherein the partial vacuum within the cup acts to join the cap member and the carrier tray;
(c) moving the cap member and the joined carrier tray to a second location; and
(d) releasing the partial vacuum in the carrier tray cup to separate the carrier tray from the cap member.

5,700,046
WAFER GRIPPER

Matthew J. Van Doren, Pleasanton; Don Sauer, San Jose, both of Calif.; Alexander H. Slocum, Concord, N.H.; David Pap Rocki, Pleasanton, Calif.; Johann Tam, Mountain View, Calif., and Larry Gerszewski, Sunnyvale, Calif., assignors to Silicon Valley Group, Inc., San Jose, Calif.

Filed Sep. 13, 1995, Ser. No. 527,796
Int. Cl.[6] B25J *15/08*
U.S. Cl. 294—119.1 **8 Claims**

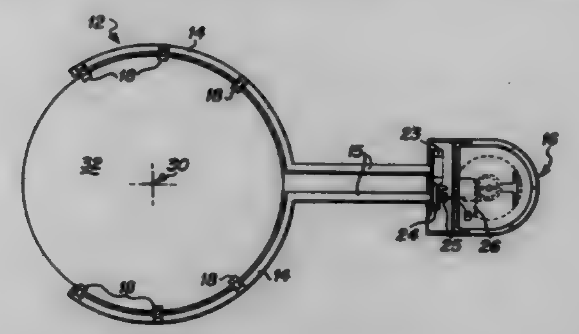

1. A wafer gripper assembly comprising:
a first gripping member having a first gripping face with a plurality of contactor elements thereon;
a second gripping member having a second gripping face with a plurality of contactor elements thereon, the second gripping face opposing the first gripping face, wherein the gripping members are movably mounted for linear movement towards and away from each other; and
a motor connected to both gripping members by a rotary-to-linear movement translator,
wherein the assembly includes six contactor elements, and the contactor elements are means for making point contact with the edge of a wafer.

5,700,047
TRUCK BED EXTENDER

Horst Leitner, 429 Aster St., Laguna Beach, Calif. 92651, and Jonathan E. Weisel, Norco, Calif., assignors to Horst Leitner, Laguna Beach, Calif.

Filed May 21, 1996, Ser. No. 651,921
Int. Cl.[6] B60P *3/40*
U.S. Cl. 296—26 **22 Claims**

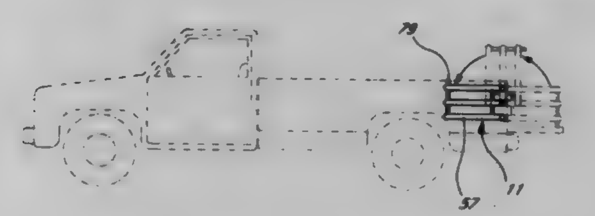

1. A truck bed extender for use with a vehicle having an open storage bed having a rear end, a first upstanding side panel to one side of said bed a second upstanding side panel to an opposite side of said bed and a tailgate, a first mounting station fixed with respect to said first panel and a second mounting station fixed with respect to said second panel, said apparatus comprising:
a first side wall;
a second side wall;
a connecting wall extending between said first side wall and said second side wall, said first side wall, said second side wall and said connecting wall cooperating to form a generally U-shaped frame;
a first mount secured to said first side wall comprising a first interlocking member; and
a second mount secured to said second side wall comprising a second interlocking member, said first interlocking member and said first station, and said second interlocking member and said second station cooperating to secure said apparatus to said vehicle so that said apparatus is rotatable about an axis between a first position wherein said connecting wall is in an upright position over said tailgate rearward of said rear end of said bed and a second position wherein said connecting wall is in an upright position spaced forward from said rear end of said bed, wherein said first station comprises a first aperture and said second station comprises a second aperture, and wherein further said a first interlocking member is a male member sized and shaped to be received by said first aperture and said second interlocking member is a male member sized and shaped to be received by said second aperture, and wherein said first interlocking member is sized and shaped to be manually withdrawn from said first aperture and said second interlocking member is sized and shaped to be manually withdrawn from said second aperture wherein further said connecting wall defines a horizontal span and comprises at least two sections which are slidable relative one another permitting said horizontal span to be adjusted.

5,700,048
VAN CANOPY

D. Scott Wade, and Richard L. Wade, both of 505 Buck Run Rd., Versailles, Ky. 40383

Filed Nov. 21, 1995, Ser. No. 560,797
Int. Cl.[6] E04H *15/06*
U.S. Cl. 296—163 **16 Claims**

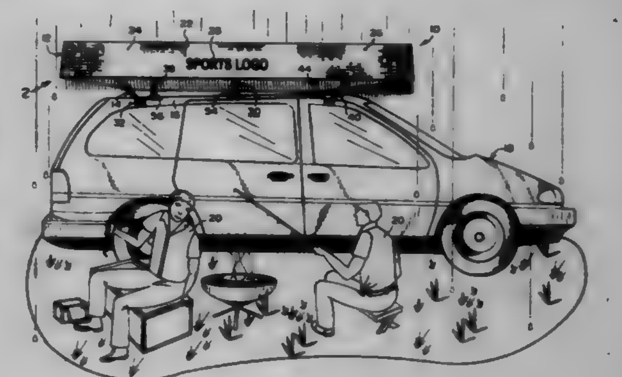

1. A van canopy comprising:
a) a cover; and
b) means for supporting said cover onto a roof of a van, so that said cover will overhang the roof on one side of the van to protect people under said cover from rain and hot sun, said supporting means including a framework and means for maintaining said framework onto the roof of the van, so that said framework will overhang the roof and be held thereto in a removable manner said framework including:
i) three parallel spaced apart horizontal rods;
ii) two crossbars, both extending horizontally across opposite ends of said horizontal rods;
iii) three vertical legs, all extending downwardly from one end of said horizontal rods; and
iv) two suport arms, both pivotally connected at upper ends midway between said two outermost horizontal rods.

5,700,049

BODY STOPPER STRUCTURE OF A CAR

Akinao Shibata, Fujisawa, Japan, assignor to Isuzu Motors Limited, Tokyo, Japan

Filed Aug. 19, 1996, Ser. No. 699,356

Claims priority, application Japan, Aug. 29, 1995, H7-219917

Int. Cl.[6] B62D *25/20;21/00*

U.S. Cl. 296—188 **1 Claim**

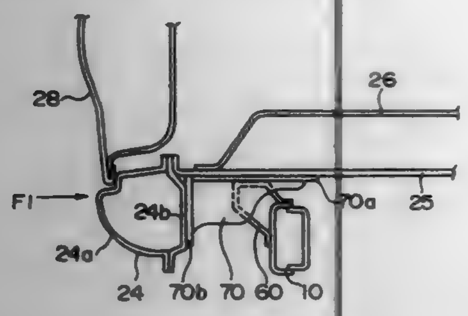

1. A body stopper structure for a vehicle including a pair of frame members extending in the lengthwise direction of the vehicle, a body supported on the frame members, a floor panel forming a floor of the body, a seat cross member provided on the floor panel and adapted to be positioned under front seats in a cabin of the vehicle, and side sills extending along both sides of the floor panel, said body stopper structure comprising:

a plurality of gussets, each gusset secured both to a lower surface of the floor panel and to one of the side sills at a position corresponding to the seat cross member on the floor panel, and each gusset configured to have a closed cross section in cooperation with the floor panel; and

a plurality of stopper members each stopper member secured to one of the frame members at a distance from the front end of one of the gussets, and each stopper member configured to have a closed cross section in cooperation with the associated frame member.

5,700,050

BLOW MOLDED STRUCTURAL INTERIOR AUTOMOTIVE PARTS

Albert J. Gonas, Grosse Pointe Shores, Mich., assignor to Cambridge Industries, Inc., Madison Heights, Mich.

PCT No. PCT/US93/11288, § 371 Date Apr. 17, 1996, § 102(e) Date Apr. 17, 1996, PCT Pub. No. WO95/13938, PCT Pub. Date May 26, 1995

PCT Filed Nov. 19, 1993, Ser. No. 193,012

Int. Cl.[6] B60R *21/04;21/045;* **B60J** *5/04;* **B29C** *67/22*

U.S. Cl. 296—189 **16 Claims**

1. A safety molding for an interior trim piece of an automotive vehicle, said safety molding characterized by:

a blow molded shell of resilient plastic material shaped to have an exterior facing section thereof abuttable against a passenger compartment facing surface of a exterior body of said automotive vehicle;

said blow molded shell having a first interior section that is filled with a structurally engineered foam that is normally rigid to be resistant and with-stand compressive forces under a predetermined amount to provide structural strength to said molding but is compressible under a compressive force over said predetermined amount.

5,700,051

INFORMATION CARD MOUNTED TO A CHAIR

Thomas J. Newhouse, Grand Rapids, Mich., assignor to Herman Miller, Inc., Zeeland, Mich.

Continuation of Ser. No. 259,035, Jun. 13, 1994, abandoned. This application May 21, 1996, Ser. No. 650,970

Int. Cl.[6] A47C *7/62*

U.S. Cl. 297—188.11 **32 Claims**

1. An operational guide for mounting to a chair having a seat and means for adjusting the chair, the operational guide comprising:

a card with a pictorial guide for operating the chair located on the top side of the card;

a holder for slidably mounting the card to the bottom of the seat;

a travel limiting member for moveably securing the card to the holder and for preventing separation of the card from the holder so that the card can only move between an extended position and a retracted position in relation to the holder;

a mounting means for attaching a top side of the holder corresponding to the top side of the card to a bottom of the chair, the mounting means adapted to allow the card to move between the extended position wherein the pictorial guide is visible to an occupant of the chair and the retracted position wherein the pictorial guide is not visible to the occupant of the chair, the mounting means also adapted to hold the holder so that the orientation of the pictorial guide is required to correspond to the orientation of the means for adjusting the chair when the card is in the extended position.

5,700,052

CHAIR FOR AN ACOUSTICALLY DESIGNED BUILDING

Ryokichi Yamazaki, Tokyo; Takeshi Sakai, and Fukushi Kawakami, both of Hamamatsu, all of Japan, assignors to Yamaha Corporation, Hamamatsu, Japan

Filed Nov. 14, 1995, Ser. No. 557,202

Claims priority, application Japan, Nov. 14, 1994, 6-279280; Jun. 26, 1995, 7-159369

Int. Cl.[6] A47C *31/00*

U.S. Cl. 297—217.3 **10 Claims**

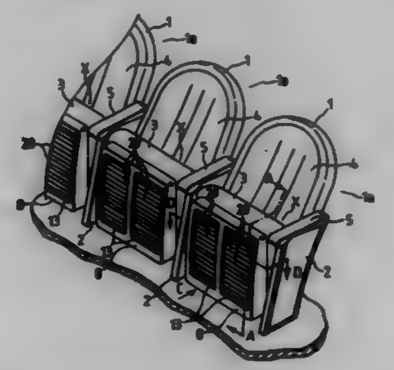

1. A chair for acoustically designed buildings comprising:

a seat having an inner space;

a back located behind the seat;

primary openings formed on a bottom surface of the seat;

a sound absorbing member disposed within the inner space of the seat; and

a louver comprising slats located behind the primary opening and means for adjustably controlling an exposure of the sound absorbing member to sounds in the buildings,

wherein the louver is in an opened state when the seat is in a first position and the louver is in a closed state when the seat is in a second position.

5,700,053

CUSHIONING AND PROTECTION APPARATUS FOR A CHAIR ARMREST

David Downing, 125 W. 400 North, Lindon, Utah 84042

Continuation of Ser. No. 330,295, Oct. 27, 1994, abandoned. This application Oct. 2, 1996, Ser. No. 724,934

Int. Cl.[6] A47C *27/00*

U.S. Cl. 297—227 **6 Claims**

1. A cushioning and protection apparatus for a chair armrest, comprising:

a cylindrical cushion body having a length and a longitudinal axis, the cushion body comprising a moldable, formable, resilient material;

central cavity formed in the cylindrical body to provide the cushion body with a tubular shape, the central cavity being adapted to receive a portion of a chair armrest;

a pair of opposing jaws formed in the cylindrical cushion body, the jaws forming an elongated opening into the central cavity, the jaws being closed due exclusively to the resilient material;

a cover including a pair of pockets into which the jaws of the cushion body age removably inserted, the cover being selectively placeable about and removable from the jaws of the cylindrical cushion body;

wherein the cylindrical cushion body is adapted to be formed about the chair armrest to protect and cushion a person's arm resting on the chair armrest;

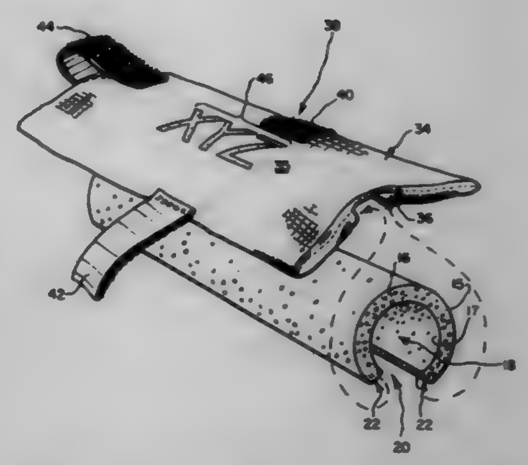

a fastening device coupled to the cylindrical cushion body and adapted to secure the cylindrical cushion body to the chair armrest, the fastening device being attached to one of the jaws, the fastening device spanning the elongated opening and being secure to the opposed jaws in an overlapping manner when secured to the chair armrest;

the cylindrical cushion body being adapted to allow a person to conveniently carry the cylindrical cushion body, the cylindrical cushion body further being adapted to enable rapid installment on and removal from the chair armrest.

5,700,054

VEHICLE SEAT ASSEMBLY INCLUDING INTEGRAL CHILD RESTRAINT SEAT

Ulf Otto Lang, Trollhattan, Sweden, assignor to Lear Corporation, Southfield, Mich.

Filed Jan. 10, 1997, Ser. No. 781,825

Int. Cl.[6] A47C *15/00*

U.S. Cl. 297—238 **20 Claims**

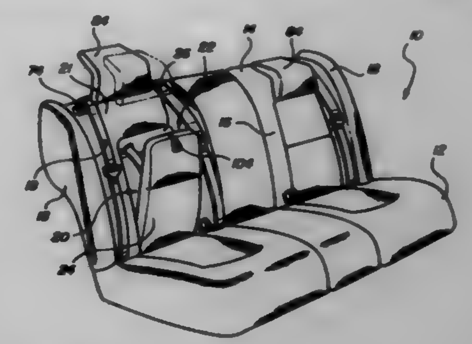

1. A child restraint seat for disposition in the seat back cushion of an adult passenger seat for restraining a child in a vehicle comprising:

an adult passenger seat having a generally horizontal seat bottom portion and a generally upright seat back portion;

a cavity recessed in said adult seat back portion for receiving said child restraint seat;

a child seat portion having a first end pivotally coupled to said adult passenger seat between a folded position recessed in said cavity forming at least a portion of said adult seat back portion and an unfolded use position extending downwardly to a generally horizontal position against said adult seat bottom portion;

a child backrest portion having an upper end and a lower end disposed in said cavity and moveable between a stowed position generally parallel with said adult seat back portion and an inclined position tilted outwardly to a predetermined child backrest angle;

a first hinge interconnecting said first end of said child seat portion and said lower end of said child backrest portion for

automatically pivoting said lower end of said child backrest portion from said stowed position to said inclined position in response to pivotal rotation of said child seat portion from said folded position recessed in said cavity to said unfolded use position against said adult seat portion; and

a second hinge interconnecting said upper end of said child backrest portion and said adult seat back portion for automatically extending said upper end of said child backrest portion from said stowed position stored in said cavity to said inclined position extending outwardly and spaced forward of said cavity in response to said pivotal rotation of said child seat portion from said folded position to said unfolded position.

5,700,055

SEAT BACK AUTOMATIC HEIGHT ADJUSTOR AND RECLINER MECHANISM

Russell K. Davidson, Dearborn; Michael H. J. Heyer, and James C. Masters, both of Farmington Hills, all of Mich., assignors to Lear Corporation, Southfield, Mich.

Filed Feb. 26, 1996, Ser. No. 607,227

Int. Cl.⁶ B60N *2/02*

U.S. Cl. 297—378.12 **21 Claims**

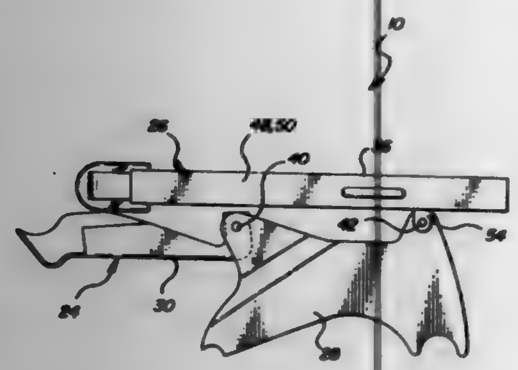

4. A passenger seat assembly for a motor vehicle which can be folded to a stored position for increasing cargo storage capacity, said assembly comprising:

a generally horizontal seat bottom having an upper surface and a lower surface;

a generally upright seat back having a front surface and a back surface;

support means for supporting said seat bottom above a vehicle floor movably between a generally horizontal use position and a folded stowed position with said upper surface adjacent the vehicle floor and for supporting said seat back movably between a generally upright position and a generally horizontal folded position overlaying said folded position of said seat bottom;

recliner means interconnecting said seat back and said support means for providing pivotal movement of said seat back between said upright position and said folded position; and

latch means operatively connected between said seat bottom and said support means for selectively locking said seat bottom in said horizontal use position and said seat back in said upright position, said latch means including blocking means for engaging said recliner means with said seat bottom in said horizontal use position to block said pivotal movement of said seat back from said upright to said horizontal folded position.

5,700,056

SECURABLE LOCKING DEVICE FOR A MOVABLE ELEMENT OF AN AUTOMOBILE VEHICLE SEAT

Vincent Bernard, Anould, France, assignor to Bertrand Faure Equipements S.A., Boulogne Cedex, France

Filed Dec. 9, 1996, Ser. No. 762,243

Claims priority, application France, Dec. 19, 1995, 95 15857

Int. Cl.⁶ B60N *2/20*

U.S. Cl. 297—378.13 **11 Claims**

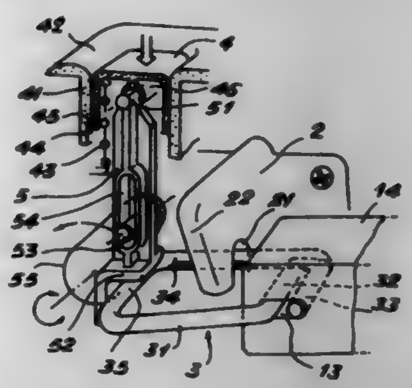

1. Device for locking a movable element of an automobile vehicle seat onto another separate element, said movable elements comprising: a movable lock elastically returned into a locked position, and, an unlocking button equipped with a push rod extending in a movement direction; one end of the push rod, located away from the button, being shaped to act on a movable element of the lock for moving said lock to an unlocking position when the button is pressed; the device further including translation guide means for said rod; and locking securing means connected to said guide means to move the guide means transversely to said movement direction, between a) a first position where said end of the rod is located closely adjacent to said element of the lock, and in which unlocking is possible: and b) a secured position where said end of the rod is spaced apart from said element.

5,700,057

HEADREST FOR MOTOR VEHICLE SEATS AND A METHOD FOR ITS MANUFACTURING

Emilio De Filippo, Bruzolo, Italy, assignor to Gestind-M.B. "Manifattura di Bruzolo" S.p.A., Bruzolo, Italy

Filed Dec. 10, 1996, Ser. No. 763,106

Claims priority, application Italy, Jul. 16, 1996, TO96A0607

Int. Cl.⁶ A47C *7/36*

U.S. Cl. 297—408 **10 Claims**

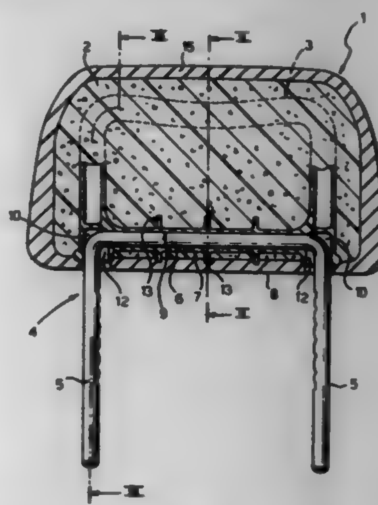

1. A headrest for a motor vehicle seat having a backrest, comprising a resilient body incorporating a moulded plastic material

supporting framework, and a bearing structure including a pair of rods to be connected to said seat backrest and a cylindrical transverse member rigidly interconnecting said rods, wherein frictionally rotatable connecting means are provided between said transverse member and said supporting framework to selectively adjust inclination of said resilient body relative to said rods, said supporting framework having an integral tubular base with a cylindrical cavity which is directly overmoulded onto said transverse member of said bearing structure, upon forming said supporting framework, so as to provide mutual interference rotatable coupling between said tubular base and said transverse member, defining said frictionally rotatable connecting means.

5,700,058

RETENTION FOR VEHICLE SEAT AND METHOD OF ASSEMBLY

Ravichandran Balagurumurthy, Dearborn Heights, and Jon W. Kinsey, Ann Arbor, both of Mich., assignors to Lear Corporation, Southfield, Mich.

Filed Jun. 18, 1996, Ser. No. 665,742

Int. Cl.⁶ B60N *2/20*

U.S. Cl. 297—440.15 **19 Claims**

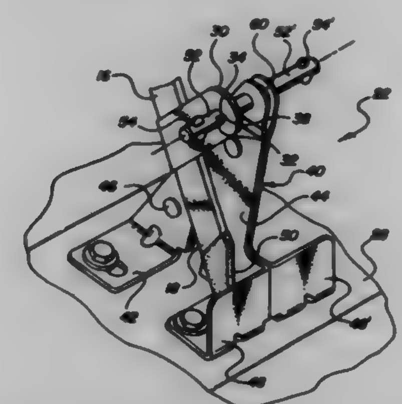

1. A folding backrest for a passenger seat assembly in a motor vehicle, said assembly comprising: a backrest frame having a first end and a second end; a first hinge operatively associated with said first end of said backrest frame and a second hinge operatively associated with said second end of said backrest frame, said first and second hinges pivotally supporting said backrest frame about an imaginary horizontal folding axis for movement between a use position and a folded position; said first hinge including a pivot beating centered along said folding axis and a hinge pin operatively pivotally disposed in said pivot bearing; said hinge pin including a keyed tip and said pivot bearing including a keyway aligned and registerable with said keyed tip when said backrest frame is adjacent said folded position to permit axial sliding connection therebetween during the assembly process and whereby said keyed tip and said keyway are rotated out of registry with one another when said backrest frame is in said use position to prevent disassembly therebetween.

5,700,059

BABY SUPPORT

Betty Lou Moscot, 11 Quaker Ridge Rd., Brookville, N.Y. 11545

Filed Jul. 2, 1996, Ser. No. 674,543

Int. Cl.⁶ A47D *1/00*

U.S. Cl. 297—452.17 **10 Claims**

1. A baby support apparatus for supporting and holding a baby comprising:

a base portion having front and back surfaces, a pair of opposite sides, and a bottom support surface;

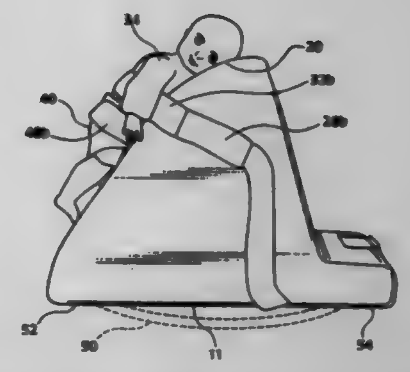

said front surface being inclined between 45°–90° with respect to said bottom surface for holding and supporting a baby in a first downwardly-facing support position;

first fastening means coupled to said base portion for releasably securing the baby on said front surface in a first support position;

a chair disposed on said back surface of said base portion for holding and supporting a baby in a sitting position, said chair comprising a seat extending outward from and integrally formed with said base portion, and a back rest formed by said back surface and extending upward from said seat; and

second fastening means coupled to said seat for releasably securing the baby in the chair in a sitting position.

5,700,060

SEATING SUSPENSION ASSEMBLY

Larry I. Bullard; Allen Sigmon, both of High Point, and Roger Tornero, Greensboro, all of N.C., assignors to Leggett and Platt, Inc., Carthage, Mo.

Filed Aug. 7, 1996, Ser. No. 693,702

Int. Cl.⁶ A47C *7/02*

U.S. Cl. 297—452.63 **7 Claims**

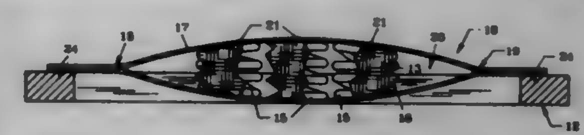

1. A suspension assembly for a seat frame comprising:

a base strap, a top strap, said base strap and siad top strap each formed from an elastomeric fabric, said base strap directly affixed to said top strap in paralled alignment therewith, said base strap and said top strap forming a pocket therebetween, and a plurality of resilient members, each of said plurality of resilient members positioned within said pocket.

5,700,061

GUIDE AND DRIVE ARRANGEMENT FOR THE WINNING MACHINES OF MINERAL WINNING INSTALLATIONS

Gerhard Merten, and Frank Fischer, both of Lünen, Germany, assignors to DBT Deutsche Bergbau-Technik GmbH, Germany

Filed Apr. 15, 1996, Ser. No. 632,110

Claims priority, application Germany, Aug. 30, 1995, 195 31 906.0

Int. Cl.⁶ E21C *29/02*

U.S. Cl. 299—43 **39 Claims**

1. In a mineral winning installation which employs a scraper-chain conveyor composed of individual pans connected end-to-end, each pan being composed of shaped side walls with upper and lower flanges and a floor plate extending between the side walls, the upper and lower flanges of the side walls of each pan projecting

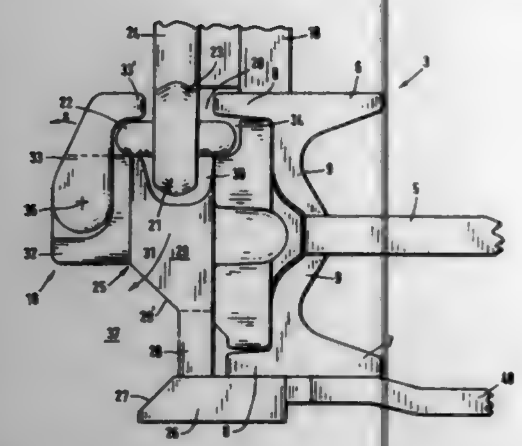

inwardly towards one another and toward the floor plate and strip projections projecting outwardly from the flanges and away from the floor plate and a winning machine extending over the conveyor and movable along the conveyor; an improved guide and drive arrangement for the machine comprising first and second guides disposed adjacent both side walls of the conveyor; and a channel defined adjacent one of the guides which is open from above and serves to receive a chain which acts as a rack abutment for a driven chain wheel mounted on the machine; wherein the channel is delimited from above by means of detachably hold-down strips and by means of the strip projections of the upper flanges of the side walls of the pans adjacent the channel which extend over the arms of horizontal links of the chain and the channel for the chain is disposed below the upper flanges of the side walls of the pans adjacent the channel.

5,700,062
WHEEL COVER ADJUSTABLE IN ITS SIZE
Johnny Wang, No. 190, Shang-Luen Village, Jen-Teh Hsiang, Tainan Hsien, Taiwan
Filed Nov. 13, 1996, Ser. No. 748,535
Int. Cl.⁶ B60B *7/12*
U.S. Cl. 301—37.33 **1 Claim**

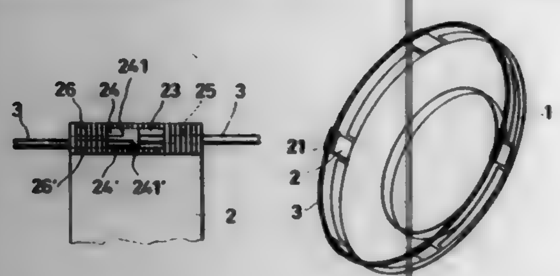

1. A wheel cover adjustable in its size comprising a plurality of securing members formed in a spaced equididstant position on an outer periphery of said wheel cover, each said securing member having a polygonal shape having respective left and right side edges, and an inner wall, said inner wall having an upper portion with a groove formed therein for a steel bar ring to fit tightly therein, one of said securing members having (1) an intermediate portion with a separating wall formed therein, said separating wall having respective right and left sides, (2) a groove formed in said right side of said separating wall, (3) a first through hole communicating with said groove in said right side and opening to said right side edge, (4) at least two grooves of different length formed in said left side of of said separating wall, and (5) at least two second through holes communicating with said grooves of different length in said left side of said separating wall and opening to said left side edge; said steel bar ring being elastically fitted in said grooves of said inner walls of all of said securing members except said one securing member, said steel bar ring having two ends, one of said two ends of said ring being inserted in said first through hole and rested in said groove in said right side of said one securing member for securement thereof, and the other of said two ends of said ring being selectively inserted in one of said second through holes and rested in one of said grooves of different length in said left side of said one securing member to adjust a diameter of said wheel cover.

5,700,063
PRESSURE MEDIUM ACTUATED VEHICLE BRAKING SYSTEM
Bernd Kiel, Wunstorf, and Karl-Heinz Unser, Muggensturm, both of Germany, assignors to Wabco GmbH, Hanover, and Mercedes-Benz AG, Stuttgart, both of Germany
Filed Feb. 5, 1996, Ser. No. 596,833
Claims priority, application Germany, Feb. 10, 1995, 195 04 393.6
Int. Cl.⁶ B60T *13/00*
U.S. Cl. 303—961 **24 Claims**

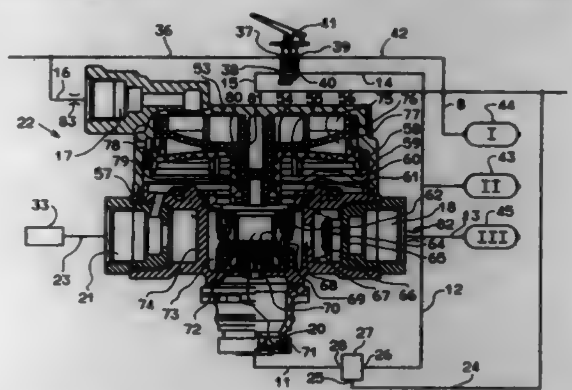

1. Pressure medium actuated braking system, comprising:
a braking power imparting device,
at least first and second braking circuits,
said first braking circuit comprising a first pressure medium storage container, at least a first braking cylinder, and a first control valve system which connects said first braking cylinder of said first braking circuit to said first pressure medium storage container or to a pressure medium sink in dependence on a first control signal produced by said braking power imparting device,
said second braking circuit comprising a second pressure medium storage container, first and second braking cylinders, and a second control valve system which connects said first and second braking cylinders of said second braking circuit to said second pressure medium storage container or to a pressure medium sink in dependence on a second control signal produced by said braking power imparting device,
said second control valve system further comprising a pressure medium input connected to said second pressure medium storage container, and a pressure medium output connected to said first and second brake cylinders of said second braking circuit, and an additional control valve system disposed between said pressure medium output of said second control valve system and said first braking cylinder of said second braking circuit, said additional control valve system connecting said first braking cylinder of said second braking circuit to a third pressure medium storage container which is independent of said second pressure medium storage container as a function of a control signal assigned to a braking circuit other than said second control signal assigned to said second braking circuit.

5,700,064

Patent Not Issued For This Number

5,700,065
PENALTY BRAKE SCHEME FOR STRAIGHT AIR PIPE BRAKE CONTROL EQUIPMENT
Paul E. Jamieson, Greer, S.C., assignor to Westinghouse Air Brake Company, Wilmerding, Pa.
Filed Oct. 24, 1996, Ser. No. 736,292
Int. Cl.⁶ B60T *7/14*
U.S. Cl. 303—19 **16 Claims**

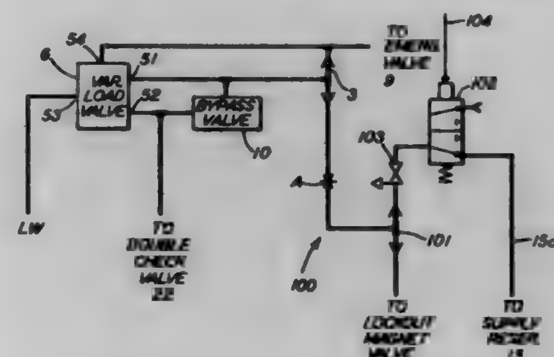

1. A penalty brake scheme for a rail vehicle having a brake control apparatus to apply and release the brakes of said rail vehicle, said brake control apparatus including a first means for providing a service brake control pressure in accordance with a command for a service brake application, a second means for providing an emergency brake control pressure in accordance with a command for an emergency brake application, a standard check valve means for conveying the higher of said service and said emergency brake control pressures received from said first means and said second means, and a standard load valve means for effecting operation of said brake control apparatus in response to whichever of said brake control pressures is received from said standard check valve means, said penalty brake scheme comprising:
(a) a third means for providing a penalty brake control pressure in response to a command for a penalty brake application; and
(b) a penalty check valve means connected between said first means, said third means and said standard check valve means for conveying the higher of said service brake control pressure and said penalty brake control pressure received from said first means and said third means, respectively, to said standard check valve means such that said standard check valve means conveys the higher of said emergency brake control pressure and said service or said penalty brake control pressures received from said second means and said penalty check valve means, respectively, to said standard load valve means so that said standard load valve means effects operation of said brake control apparatus in response to whichever of said brake control pressures is received from said standard check valve means.

5,700,066
PENALTY BRAKE DESIGN FOR STRAIGHT AIR PIPE BRAKE CONTROL EQUIPMENT
Paul E. Jamieson, Greer, S.C., assignor to Westinghouse Air Brake Company, Wilmerding, Pa.
Filed Oct. 24, 1996, Ser. No. 736,576
Int. Cl.⁶ B60T *7/14*
U.S. Cl. 303—19 **11 Claims**

1. A penalty brake design for a rail vehicle having a brake control apparatus to apply and release the brakes of said rail vehicle, said brake control apparatus including a first means for providing a service brake control pressure in accordance with a command for a service brake application, a second means for providing an emergency brake control pressure in accordance with a command for an emergency brake application, a standard check valve means for conveying the higher of said service and said

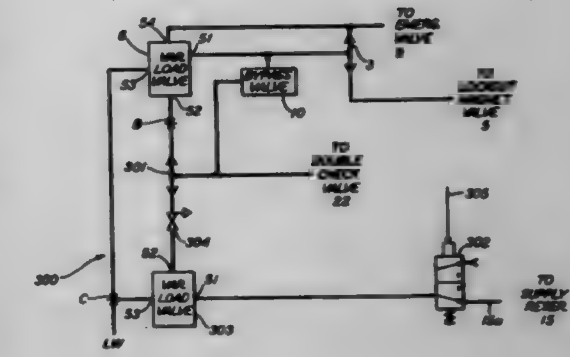

emergency brake control pressures received from said first means and said second means, a standard load valve means for providing in response to whichever of said brake control pressures is received from said standard check valve means a first brake cylinder control pressure that is proportional to weight borne by said rail vehicle, and a relay valve means for effecting operation of said brake control apparatus in response to said first brake cylinder control pressure received from said standard load valve means, said penalty brake design comprising:
(a) a third means for providing a penalty brake control pressure in response to a command for a penalty brake application;
(b) a penalty load valve means for providing in response to said penalty brake control pressure received from said third means a second brake cylinder control pressure that is proportional to weight borne by said rail vehicle; and
(c) a penalty check valve means for conveying the higher of said first brake cylinder control pressure and said second brake cylinder control pressure received from said standard load valve means and said penalty load valve means, respectively, to said relay valve means through which operation of said brake control apparatus is effected.

5,700,067
HYDRAULIC BRAKING SYSTEM, ESPECIALLY FOR MOTOR VEHICLES
Wilhelm Heubner, Wohnsitz Am Gries, Germany, assignor to Fahrzeugtechnik Ebern GmbH, Germany
Filed Sep. 9, 1996, Ser. No. 707,886
Claims priority, application Germany, Sep. 12, 1995, 19533481.7; May 8, 1996, 19618489.4
Int. Cl.⁶ B60T *13/12;* **F16D** *55/224*
U.S. Cl. 303—9 **5 Claims**

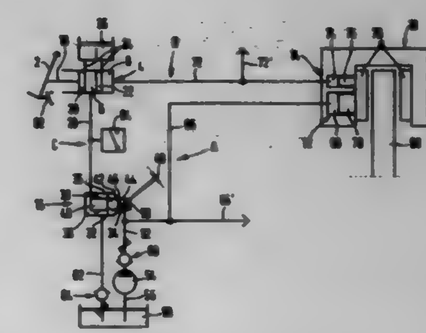

1. A hydraulic braking system, especially for motor vehicles, comprising:
an actuating device;
a master cylinder connected to said actuating device, said master cylinder including a first pressure chamber and a second pressure chamber;

a flow control valve having a regulating cross-section, through which flows a pressure medium during servo-force braking, hydraulically connected to said first pressure chamber so that said first pressure chamber hydraulically controls said flow control valve by adjusting the regulating cross-section to produce a defined dynamic pressure; and

a brake application element constructed and arranged to produce a braking force, said brake application element including a first piston/cylinder arrangement and a second piston/cylinder arrangement, said first piston/cylinder arrangement being hydraulically connected to said flow control valve and being responsive to said defined dynamic pressure received from said flow control valve, said second piston/cylinder arrangement being hydraulically connected to said second pressure chamber to produce a braking force via the brake application element if said servo-force braking fails.

5,700,068

POSITIONING APPARATUS FOR INERTIAL SENSORS

Barry G. Austin, Marshall, Mich., assignor to Tekonsha Engineering Company, Tekonsha, Mich.

Filed Oct. 16, 1995, Ser. No. 543,356

Int. Cl.⁶ B60T *8/18*

U.S. Cl. 303—24.1 **17 Claims**

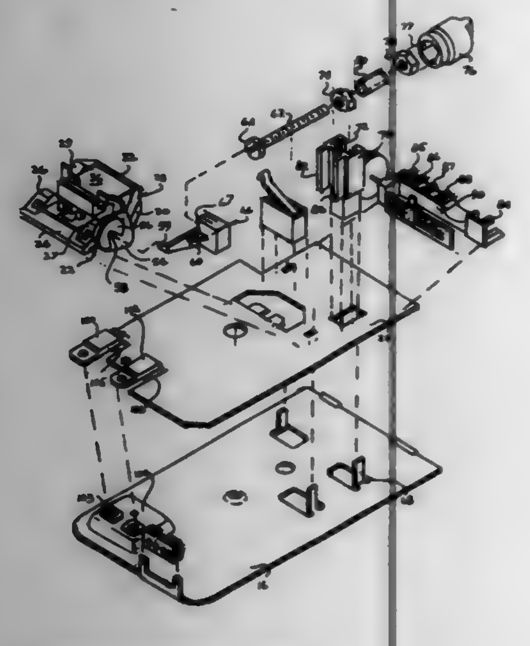

1. An inertial sensor, comprising:

a housing;

a flexible pendulum;

a rigid support structure having a base portion and a pendulum mount portion pivotally attached to said base portion by a torsionally flexible structure, said base portion being secured at a fixed location and at a fixed attitude relative to said housing, said pendulum being attached at one end to said pendulum mount portion, another end of said pendulum being free to move in response to inertial forces; and

a pendulum attitude adjustment assembly which permits precise adjustment of the verticality of said pendulum, said adjustment assembly including an adjustment shaft operably coupled to said pendulum mount portion at a point spaced from said torsionally flexible structure to achieve rotation of said pendulum mount portion with respect to said base portion by torsionally flexing said member through a first angle when said adjustment shaft is rotated through an angle greater than said first angle.

5,700,069

ANTI-SKID CONTROL SYSTEM FOR AN AUTOMOTIVE VEHICLE

Satoshi Yokoyama, Anjo; Shinsuke Sakane, Toyota, and Masaru Kamikado, Kariya, all of Japan, assignors to Aisin Seiki Kabushiki Kaisha, Kariya, Japan

Filed Jul. 8, 1996, Ser. No. 676,836

Claims priority, application Japan, Jul. 6, 1995, 7-171033

Int. Cl.⁶ B60T *8/32*

U.S. Cl. 303—115.2 **9 Claims**

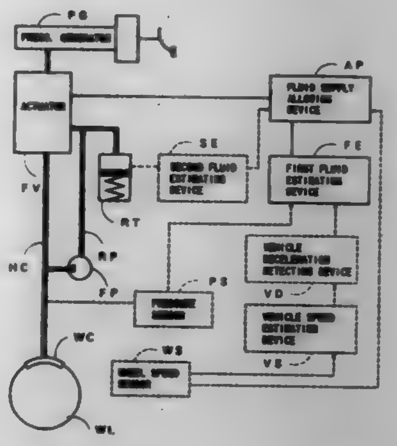

1. An anti-skid control system for controlling a braking force applied to road wheels of an automotive vehicle, comprising:

a wheel brake cylinder operatively connected to a road wheel of said vehicle for applying a braking force thereto;

a hydraulic pressure generator for supplying a pressurized brake fluid to said wheel brake cylinder;

actuating means disposed between said hydraulic pressure generator and said wheel brake cylinder for controlling the hydraulic braking pressure in said wheel brake cylinder;

a reservoir communicated with said actuating means, said reservoir having a capacity for storing a certain amount of brake fluid, and said reservoir storing the brake fluid in said wheel brake cylinder through said actuating means to decrease the pressure in said wheel brake cylinder;

a return passage for communicating said reservoir with said wheel brake cylinder;

a pressure pump disposed in said return passage, said pressure pump having an inlet port communicated with said reservoir and an outlet port communicated with said wheel brake cylinder for discharging a pressurized brake fluid thereinto, said actuating means blocking the communication between said hydraulic pressure generator and said wheel brake cylinder, and then said pressure pump discharging the brake fluid stored in said reservoir into said return passage to gradually increase the pressure in said wheel brake cylinder;

first fluid estimating means for estimating a first amount of brake fluid supplied from said hydraulic pressure generator into a hydraulic circuit disposed downstream of said actuating means and including said wheel brake cylinder and said reservoir; and

fluid supply allowing means for allowing said actuating means to communicate said hydraulic pressure generator with said wheel brake cylinder, when the first amount of brake fluid is smaller than a first predetermined amount.

5,700,070

VEHICLE BRAKE CONTROL DEVICE

Koji Sakai, Hamakita, Japan, assignor to Nisshinbo Industries Inc., Tokyo, Japan

Filed Aug. 11, 1995, Ser. No. 514,296

Claims priority, application Japan, Aug. 16, 1994, 6-214223

Int. Cl.⁶ B60T *8/32*

U.S. Cl. 303—115.4 **9 Claims**

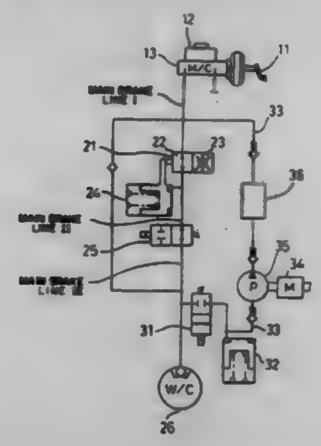

1. A vehicle brake control device used for anti-skid control or traction control, comprising:

a main brake line routed through a master cylinder;

an inlet valve; and

a wheel cylinder;

wherein an accumulator for storing hydraulic pressure is installed in the main brake line between the master cylinder and the wheel cylinder, said accumulator being of an extremely small capacity which varies the brake pressure of the wheel cylinder by at most a few atmospheres.

5,700,071

ELECTROHYDRAULIC PRESSURE CONTROL DEVICE

Helmut Steffes, Hattersheim; Dieter Dinkel, Eppstein/Ts; Gunther Vogel, Dreieich, and Peter Volz, Darmstadt, all of Germany, assignors to ITT Automotive Europe GmbH, Frankfurt, Germany

PCT No. PCT/EP95/00266, § 371 Date Jul. 29, 1996, § 102(e) Date Jul. 29, 1996, PCT Pub. No. WO95/20510, PCT Pub. Date Aug. 3, 1995

PCT Filed Jan. 25, 1995, Ser. No. 687,462

Claims priority, application Germany, Jan. 29, 1994, 44 02 735.4

Int. Cl.⁶ B60T *13/66;* **F15B** *13/08*

U.S. Cl. 303—119.2 **10 Claims**

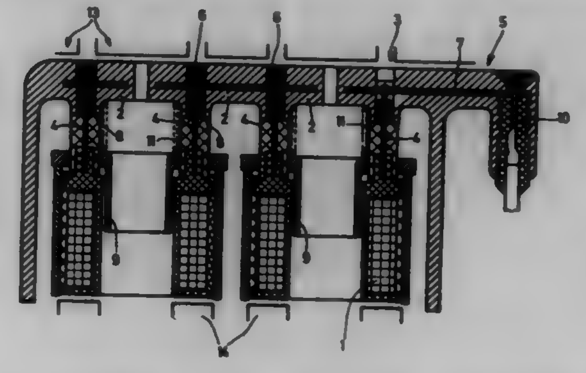

1. Electrohydraulic pressure control device, in particular brake pressure control device including electromagnetically actuated hydraulic valves, which are arranged on a valve-holding element, with coils which extend over the valve-holding element, wherein the coils are provided with electrical contact elements at their parts extending beyond the valve-holding element, with a cover which covers the extending coil parts and the contact elements, with a support element to hold the coils, that are positioned within the cover, wherein the cover or a portion of the cover is designed as electromagnetic controller or for holding the connecting parts of an electronic controller, comprising:

a plate-like carrier element facing the coils includes several slots,

pressure-locking closing devices residing in said slots of said carrier element and which project from the outer surface of the cover.

5,700,072

BRAKE ENERGY BALANCING SYSTEM FOR MULTIPLE BRAKE UNITS

Robert D. Cook, Valencia, and Bijan Salamat, Santa Clarita, both of Calif., assignors to Hydro-Aire Division of Crane Company, Burbank, Calif.

Continuation of Ser. No. 594,862, Jan. 31, 1996, Pat. No. 5,605,387, which is a continuation of Ser. No. 318,470, Oct. 5, 1994, Pat. No. 5,507,568, which is a continuation of Ser. No. 157,692, Nov. 24, 1993, Pat. No. 5,390,990. This application Nov. 26, 1996, Ser. No. 755,838

Int. Cl.⁶ B60T *8/58*

U.S. Cl. 303—135 **10 Claims**

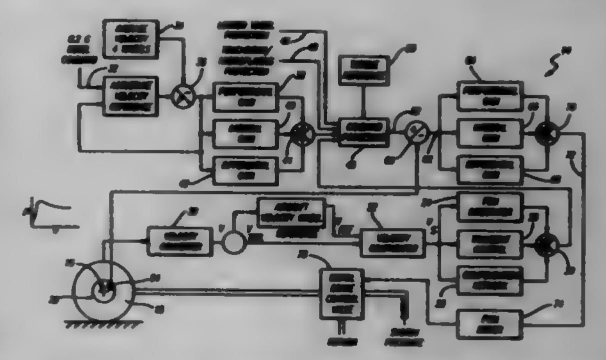

1. A brake energy balancing system for controlling a wheel brake, said system comprising:

a wheel brake assembly having a wheel and a wheel brake;

a brake torquing mechanism for applying brake torque to each said wheel brake;

a torque signal generator for producing brake torque signals that are a function of the brake torque applied to said wheel brake;

a command brake torque signal generator for generating a command brake torque signal;

a torque comparator for generating brake torque difference signals indicative of the difference between said brake torque signals and said command brake torque signal; and

an energy balancing controller for providing an energy balancing control signal to said brake torquing mechanism in response to said brake torque difference signals.

5,700,073

BRAKING FORCE CONTROL SYSTEM AND THE METHOD THEREOF

Yutaka Hiwatashi, Isesaki; Koji Matsuno, Ota; Akira Takahashi, Ota, and Munenori Matsuura, Ota, all of Japan, assignors to Fuji Jukogyo Kabushiki Kaisha, Tokyo, Japan

Filed Jul. 23, 1996, Ser. No. 681,525

Claims priority, application Japan, Sep. 11, 1995, 7-232784

Int. Cl.⁶ B60T *8/58*

U.S. Cl. 303—146 **10 Claims**

1. A braking force control system of a vehicle, having a front wheel, a rear wheel, a front wheel cylinder for said front wheel, a rear wheel cylinder for said rear wheel and a brake drive apparatus

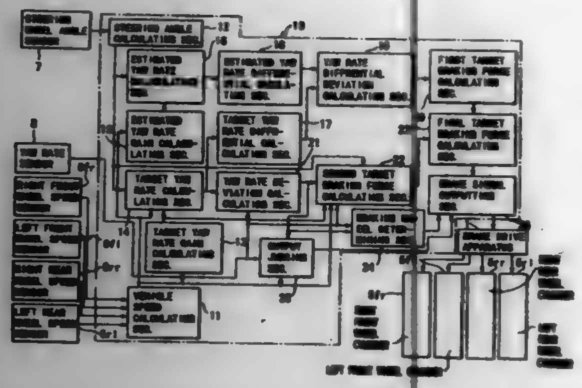

for supplying and controlling a brake pressure to said front wheel cylinder and said rear wheel cylinder, vehicle speed detecting means for detecting a vehicle speed, and steering angle detecting means for detecting a steering angle, comprising:

target yaw rate gain calculating means for calculating a target yaw rate gain based on said vehicle speed;

actual yaw rate detecting means for detecting an actual yaw rate;

target yaw rate calculating means for calculating a target yaw rate based on said vehicle speed, said steering angle and said target yaw rate gain;

estimated yaw rate gain calculating means for calculating an estimated yaw rate gain based on said vehicle speed;

estimated yaw rate calculating means for calculating an estimated yaw rate under an estimated running condition based on said estimated yaw rate gain and said steering angle;

target yaw rate differential calculating means for calculating a target yaw rate differential;

estimated yaw rate differential calculating means for calculating an estimated yaw rate differential;

yaw rate differential deviation calculating means for calculating a yaw rate differential deviation of said target yaw rate differential and said estimated yaw rate differential;

first target braking force calculating means for calculating a first target braking force for said front wheel and a first target braking force for said rear wheel respectively based on said yaw rate differential deviation;

yaw rate deviation calculating means for calculating a yaw rate deviation of said actual yaw rate and said target yaw rate;

second target braking force calculating means for calculating a second target braking force for said front wheel and a second target braking force for said rear wheel respectively based on said yaw rate deviation, said steering angle, said target yaw rate gain, said vehicle speed and said actual yaw rate;

final target braking force calculating means for calculating a final target braking force for said front wheel based on said first target braking force for said front wheel and said second target braking force for said front wheel and for calculating a final target braking force for said rear wheel based on said first target braking force for said rear wheel and second target braking force for said rear wheel;

braking wheel determining means for determining a braking wheel based on said actual yaw rate and said yaw rate deviation such that said rear wheel on the side of a turning center is selected when said actual yaw rate differs from said yaw rate deviation in sign and such that said front wheel on the opposite side of a turning center is selected when said actual yaw rate agrees with said yaw rate deviation in sign;

output judging means for determining a judging threshold value of said yaw rate deviation and for judging whether or not said yaw rate deviation is in a control zone by comparing said yaw rate with said judging threshold value; and

brake signal outputting means for outputting a brake signal to said brake drive apparatus so as to apply said final target braking force to said braking wheel.

5,700,074
BRAKING FORCE DISTRIBUTION CONTROL SYSTEM FOR VEHICLE

Yoichi Sugimoto; Yoshihiro Urai, and Shohei Matsuda, all of Wako, Japan, assignors to Honda Giken Kogyo Kabushiki Kaisha, Tokyo, Japan

Filed Jun. 19, 1996, Ser. No. 667,995

Claims priority, application Japan, Jun. 20, 1995, 7-153648

Int. Cl.[6] B60T *8/26;8/32*

U.S. Cl. 303—186 4 Claims

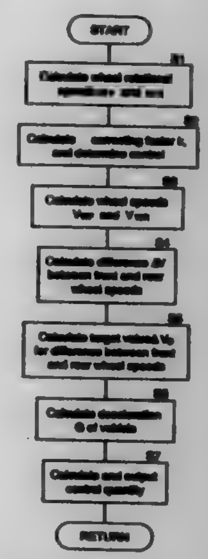

1. A braking force distribution control system for a vehicle having front and rear wheels, comprising:

a front wheel brake for exhibiting a braking force corresponding to a braking liquid pressure;

a rear wheel brake for exhibiting a braking force corresponding to a braking liquid pressure;

a front wheel rotational speed sensor for detecting a front wheel rotational speed;

a rear wheel rotational speed sensor for detecting a rear wheel rotational speed;

a front wheel speed calculating means for calculating a front wheel speed based on the front wheel rotational speed detected by said front wheel rotational speed sensor and based on a front wheel diameter;

a rear wheel speed calculating means for calculating a rear wheel speed based on the rear wheel rotational speed detected by said rear wheel rotational speed sensor and based on a rear wheel diameter;

braking pressure regulating means for regulating a ratio of the braking liquid pressure for the front and rear wheels;

control quantity calculating means for calculating a control quantity for the braking pressure regulating means based on comparison of the front and rear wheel speeds calculated in said front and rear wheel speed calculating means;

correcting-factor calculating means for calculation a correcting factor corresponding to a difference between a preset wheel diameter and an actual wheel diameter, based on a ratio of the front and rear wheel rotational speeds detected by said front and rear wheel rotational speed sensors;

wheel speed correcting means for correcting at least one of the front and rear wheel speeds calculated by said front and rear wheel speed calculating means prior to the calculation of the control quantity by said control quantity calculating means; and

control determining means for determining whether a range of variation in the correcting factor calculated by said correcting factor calculating means is equal to or larger than a preset value, and for outputting a signal indicative of a command to prohibit the calculation of the control quantity based on comparison of the front and rear wheel speeds in said control quantity calculating means when the range of variation in the correcting factor is equal to or larger than the preset value.

5,700,075
BATTERY STORAGE AND DISPENSER APPARATUS

Robert N. Perone, 109 Nowlin Dr., Highland Village, Tex. 75067

Filed Jul. 1, 1996, Ser. No. 673,025

Int. Cl.[6] B65D *83/02;* B65G *57/20*

U.S. Cl. 312—45 3 Claims

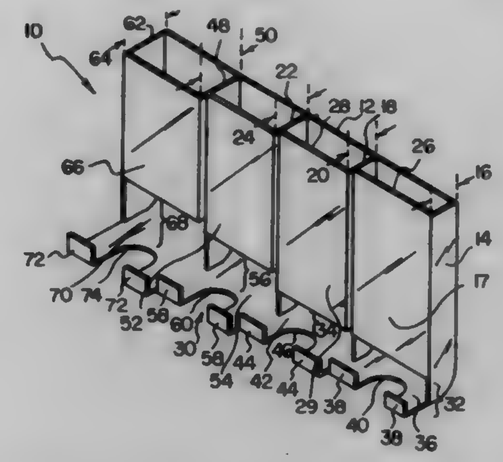

1. A storage and dispenser apparatus comprising:

a back wall panel;

a transparent first side wall panel projecting outward from said back wall panel, said first side wall panel having a first side wall outer edge and a first side wall panel width;

a transparent second side wall panel projecting outward from said back wall panel, said second side wall panel having a second side wall outer edge and a second side wall panel width which is greater than said first side wall panel width;

a transparent third side wall panel projecting outward from said back wall panel, said third side wall panel having a third wall outer edge and a third side wall panel width, wherein said third side wall panel width is greater than said second side wall panel width;

a transparent fourth side wall panel projecting outward from said back wall panel, said fourth side wall panel having a fourth side wall outer edge and a fourth side wall panel width, wherein said fourth side wall panel width is greater than said second side wall panel width;

a transparent first front wall panel extending between said first side wall panel and said second side wall panel, said first front wall panel being coupled to said first side wall outer edge of said first side wall panel, said first front wall panel being coupled to said second side wall panel at a point spaced from said second side wall outer edge to define an exterior second side wall viewing window and an interior second side wall viewing window separated by said first front wall panel;

a transparent second front wall panel extending between said second side wall panel and said third side wall panel, said second front wall panel being coupled to said second side wall outer edge of said second side wall panel, said second front wall panel being coupled to said third side wall panel at a point spaced from said third side wall outer edge to define an exterior third side wall viewing window and an interior third side wall viewing window separated by said second front wall panel;

a transparent third front wall panel extending between said third side wall panel and said fourth side wall panel, said third front wall panel being coupled to said third side wall outer edge of said third side wall panel;

a bottom portion connected to said back wall panel, wherein said bottom portion extends below said respective front wall panels to define a first dispensing gap between said first front wall panel and said bottom portion, a second dispensing gap between said second front wall panel and said bottom portion, and a third dispensing gap between said third front wall panel and said bottom portion.

5,700,076
LASER ILLUMINATED IMAGE PRODUCING SYSTEM AND METHOD OF USING SAME

Arthur P. Minich; David W. Kappel, both of San Diego; David E. Hargis, La Jolla, and Shlomo Assa, Encinitas, all of Calif., assignors to Proxima Corporation, San Diego, Calif.

Continuation-in-part of Ser. No. 279,943, Jul. 25, 1994, Pat. No. 5,517,263. This application Aug. 18, 1994, Ser. No. 292,619

Int. Cl.[6] G03B *21/00*

U.S. Cl. 353—31 21 Claims

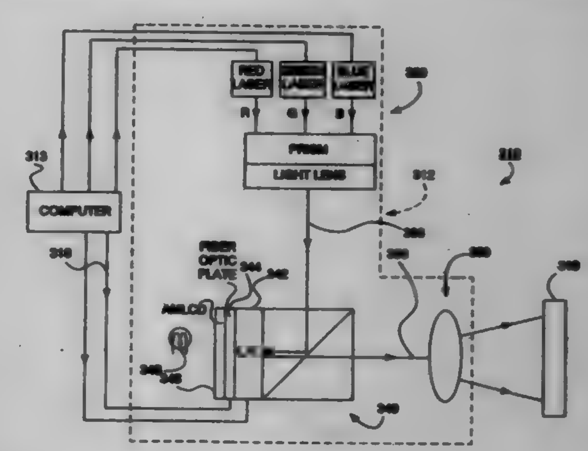

1. An image producing system, comprising:

light source means including at least one laser device switchable between an on state and an off state for generating pulses of coherent projection light along an input optical path, wherein said coherent projection light is generated at a maximum luminosity level when said laser device is switched to said on state;

spatial light modulator means disposed in said input optical path for modulating said coherent projection light to produce output light representative of the image along an output optical path for facilitating the projection of the image onto a remote surface, wherein substantially all of said output light produced by said spatial light modulator means is projected onto said remote surface;

said spatial light modulator means includes a light valve for controlling the luminosity of said output light produced by said spatial light modulator means to facilitate reproducing the image with varying shades on said remote surface; and

wherein said light source means includes at least three laser devices, said laser devices including a red laser device, a green laser device, and a blue laser device which are each switched between their on and off states to generate sequential mono-colored pulses of coherent projection light for facilitating the reproduction of the image in full color.

5,700,077
LINE LIGHT SOURCE INCLUDING FLUORESCENT COLORANT

John F. Dreyer, Jr., North Oaks; Thomas I. Bradshaw, Afton; David M. Burns, Woodbury; Lee A. Pavelka, Cottage Grove, and Bruce D. Orensteen, St. Paul, all of Minn., assignors to Minnesota Mining and Manufacturing Company, St. Paul, Minn.

Continuation of Ser. No. 409,332, Mar. 23, 1995, abandoned. This application Jun. 7, 1995, Ser. No. 474,726

Int. Cl.[6] F21V *7/04*

U.S. Cl. 362—32 10 Claims

1. A line light source comprising:

a light source;

a light distribution assembly optically coupled to said light source and including:

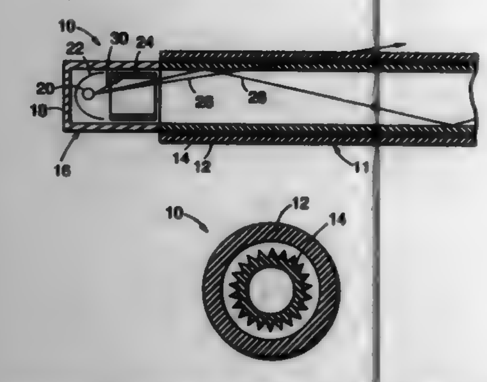

(a) a hollow, tubular housing having a first end and a second end and having a length extending along a major axis of said housing, at least a portion of said housing comprising a substantially optically transparent material; and
(b) a light conduit disposed substantially entirely within and extending along at least a portion of the length of said housing, said light conduit consisting essentially of a thin film of a totally internally reflecting material,

wherein at least one of the tubular housing and the light conduit comprises a polymeric matrix, and a fluorescent colorant, and wherein the fluorescent colorant contains a dye selected from the group of dyes consisting of thioxanthone, perylene imide and thioindigoid compounds and wherein the fluorescent colorant is present in an amount sufficient generate fluorescent light detectable to the naked eye in response to ambient daytime lighting conditions.

5,700,078
LASER ILLUMINATED LIGHTING SYSTEM
Timothy Fohl, Carlisle, Mass.; Michael Anthony Marinelli, Northville, and Jeffrey Thomas Remillard, Ypsilanti, both of Mich., assignors to Ford Global Technologies, Inc., Dearborn, Mich.
Filed Dec. 23, 1996, Ser. No. 780,034
Int. Cl.⁶ F21V *7/04;8/00*
U.S. Cl. 362—32 **17 Claims**

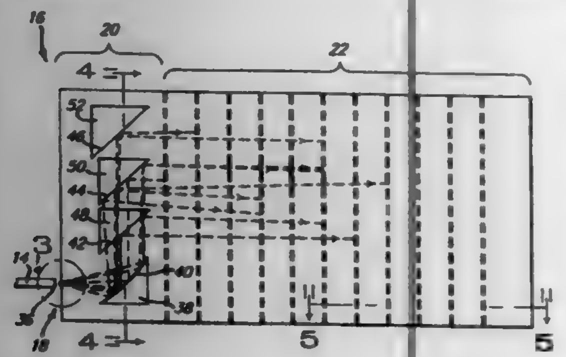

1. A lamp assembly for use in an automotive vehicle, said lamp assembly comprising:
(a) a laser light source for transmitting light;
(b) a unitary optical element adjacent said laser light source for receiving light therefrom, said unitary optical element comprising:
(i) a front surface;
(ii) an input portion, with a first light collimator;
(iii) a manifold portion having an aperture defining a second light collimator along an edge thereof normal to said front surface, said second light collimator positioned so as to direct collimated light in a predetermined direction, said manifold portion further having a plurality of recesses defining reflective surfaces normal to said front surface aligned along said predetermined direction, said plurality of recesses having a depth increasing a predetermined increment along said predetermined direction; and,
(iv) a kicker portion having a plurality of reflective facets extending a length of said unitary optical element, each of said reflective facets being skewed with respect to said front surface.

5,700,079
HEADLIGHT FOR VEHICLE
Bernhard Woerner; Kurt Haug, both of Reutlingen; Thomas Fabry, Neckartenzlingen; Peter Kusserow, Sonnenbuehl, and Bert Jenner, Hamburg, all of Germany, assignors to Robert Bosch GmbH, Stuttgart, Germany
Filed Sep. 28, 1994, Ser. No. 314,195
Claims priority, application Germany, Oct. 12, 1993, 43 34 721.5
Int. Cl.⁶ B60Q *1/04*
U.S. Cl. 362—80 **6 Claims**

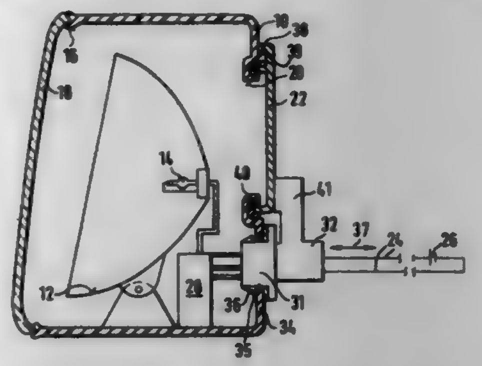

1. A headlight for a vehicle, comprising a housing having an opening; a gas discharge lamp arranged in said housing; a closing part which closes said opening; a voltage source with which said gas discharge lamp is connectable; connecting means for connecting said gas discharge lamp with said voltage source and including a plug connection with a releasable plug part arranged outside said housing, said closing part being removable from outside of said housing for releasing said opening, said releasable plug part blocking said closing part in a position in which said closing part closes said opening.

5,700,080
VEHICULAR LAMP
Tadayuki Okuda, Shizuoka, Japan, assignor to Koito Manufacturing Co., Ltd., Tokyo, Japan
Filed Dec. 28, 1995, Ser. No. 580,185
Claims priority, application Japan, Jan. 10, 1995, P.HEI.7-017431
Int. Cl.⁶ F21V *29/00*
U.S. Cl. 362—80 **22 Claims**

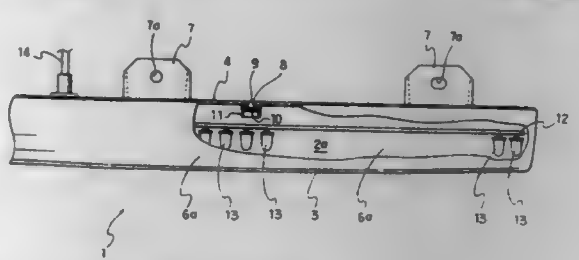

1. A vehicular lamp, comprising:
a lamp body including a wall;
a lamp chamber defined by said lamp body;
a light source disposed in said lamp chamber;

an encircle wall formed on said wall of said lamp body, said encircle wall opening to said lamp chamber and to air outside of the lamp, said encircle wall projecting inward with respect to said lamp chamber, with no portion of said encircle wall projecting exteriorly beyond said wall of said lamp body; and
an air communication path defined by said encircle wall communicating said lamp chamber with the air outside of the lamp,
wherein said encircle wall comprises an outer peripheral wall projecting frontwardly from the wall of said lamp body toward a lens part of said lamp body, and an inner peripheral wall which is integrally formed with said outer peripheral wall by bending a front edge thereof inwardly to be directed rearward away from said lens part.

5,700,081
DECORATIVE LIGHT ASSEMBLY
Jay S. Mengle; Baker A. Mitchell, Jr., and Marsha A. Mengle, all of Houston, Tex., assignors to Holiday Innovations, Inc., Houston, Tex.
Filed Apr. 26, 1996, Ser. No. 638,356
Int. Cl.⁶ F21P *1/02*
U.S. Cl. 362—123 **9 Claims**

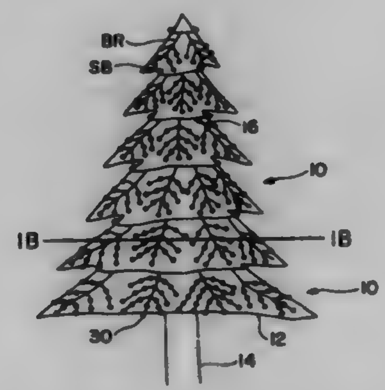

1. A decorative light assembly for illuminating a tree having a trunk, branches stemming from the trunk, and subbranches stemming from the branches, comprising:
an electrical cable having primary input and output conductors with a plug at one end thereof and adapted for placement within the tree about the trunk thereof; and
a plurality of light string clusters spaced along said cable, each of said clusters including
central portion extending from said cable for placement generally along the longitudinal length of a branch of the tree,
a plurality of looped components that extend generally laterally from and return to locations spaced along the central portion for placement generally along the subbranches of the branch, the looped components being electrically connected to the central portion, whereby the central portion and looped components are prearranged generally to mimic the shape of the branch and subbranches, and
a plurality of bulb sockets electrically connected at spaced intervals in series along the respective looped components,
the looped components and bulb sockets together creating a distribution of lights in the tree when the central portion and the looped components are extended along the branches and subbranches of the tree.

5,700,082
CHRISTMAS LIGHT ASSEMBLY
Juei-Tang Peng, No. 312, Yen Ping Road, Sec. 3, Hsinchu City, Taiwan
Filed Oct. 29, 1996, Ser. No. 739,208
Int. Cl.⁶ H01R *33/00*
U.S. Cl. 362—226 **1 Claim**

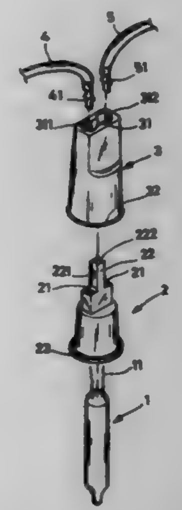

1. A Christmas light assembly comprising:
a tapered, cylindrical, bottom-opened lamp holder having an axial insertion hole at a top side thereof;
a tapered, cylindrical, bottom-opened lamp base fit into said lamp holder and having two axial through holes;
a bulb press-fit into said lamp base and having two conductor wires inserted through the axial through holes of said lamp base and bilaterally retained between said lamp base and said lamp holder; and,
two electrical wires respectively inserted into the axial insertion hole of said lamp holder and having a respective conductor terminal respectively disposed in contact with the conductor wires of said bulb;
wherein the axial insertion hole of said lamp holder includes two circular axial wire holes linked in parallel;
said lamp holder including a rim raised around a periphery of a bottom open end of the lamp holder press-fit into engagement with a peripheral bottom flange of said lamp base;
said lamp base including an upright rod axially raised from a top side of the lamp base between said axial through holes and inserted into the axial insertion hole of said lamp holder between said circular axial wire holes to separate said electrical wires from each other, said upright rod having two longitudinal grooves at two opposite sides of said rod which receive said electrical wires respectively, and the peripheral bottom flange being raised around a periphery of a bottom open end of the lamp base.

5,700,083
DEVICE FOR DISPLAYING ELECTRIC LAMPS
Thomas E. Boechel, 4210 Mundy St., Blasdell, N.Y. 14219
Filed Nov. 25, 1996, Ser. No. 756,177
Int. Cl.⁶ F21V *21/00*
U.S. Cl. 362—249 **19 Claims**

1. A device for displaying electric lamps in a window frame and the like, the display device comprising:
a) at least a first rod means, including:
i) a first intermediate member having a length nearly equal to but somewhat less than a first distance between spaced apart surfaces of the window frame;
ii) a plurality of first lamp retaining means provided as clip means at spaced intervals along the length of the first intermediate member; and

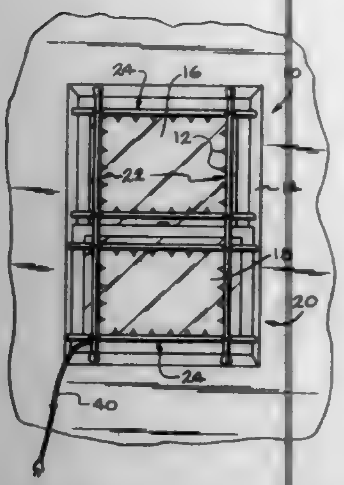

iii) first end members provided at opposed terminal ends of the first intermediate member to fit between the spaced apart surfaces defining the first distance of the window frame;

b) a plurality of electric lamps supported by respective ones of the plurality of lamp retaining means; and

c) an electric cord adapted to be connected to an electric power source to power the electric lamps.

5,700,084

OPTICAL SOURCE POSITION ADJUSTMENT DEVICE

Manabu Yasukawa; Chiyoharu Horiguchi, and Musubu Koishi, all of Hamamatsu, Japan, assignors to Hamamatsu Photonics K.K., Shizuoka-ken, Japan

Filed Aug. 22, 1996, Ser. No. 697,351

Claims priority, application Japan, Aug. 22, 1995, P7-213581

Int. Cl.^{6} **F21V** *21/28*

U.S. Cl. 362—275 **8 Claims**

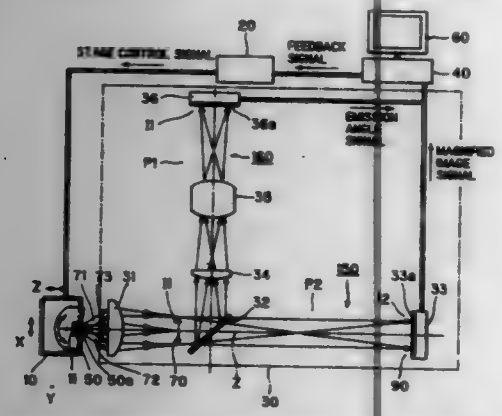

1. A light-source position adjustment device for aligning, with a predetermined standard direction, a direction in which a light source emits light and for positioning a light emission point on a predetermined standard position, the device comprising:

a magnification lens system for magnifying a light bundle emitted from a light source;

first optical path setting means for guiding a light bundle magnified at the magnification lens system toward first and second optical paths;

angular shift measuring means disposed in the first optical path and for detecting emission angle intensity distribution of the light source;

position shift measuring means disposed in the second optical path and for detecting a magnification image of the light source produced on an image plane of the magnification lens;

a multi-axes stage unit including means for producing parallel movement and swinging movement of the light source;

stage drive means for transmitting a drive signal to the multi-axes stage unit; and

control means for determining, based on an output signal from the angular shift measuring means, an amount that a direction in which the light source emits light shifts from the predetermined standard direction and for determining, based on an output signal from the position shift measuring means, an amount that a light-generating point of the light source is displaced from the standard position, the control means outputting control signals to the stage drive means.

5,700,085

SURGICAL OR CLINICAL LAMP HANDLE SHIELD OR PROPHYLACTIC

Mitchell C. Calderwood, 1801 State St., Suite D, Santa Barbara, Calif. 93101

Continuation of Ser. No. 368,838, Jan. 5, 1995, abandoned. This application Jun. 10, 1996, Ser. No. 660,838

Int. Cl.^{6} **F21L** *15/12*

U.S. Cl. 362—399 **11 Claims**

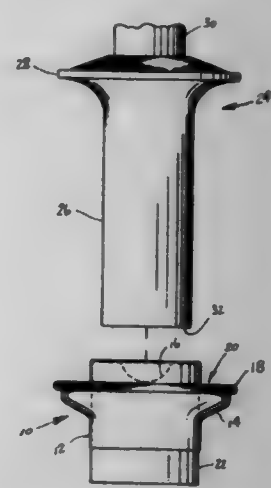

1. A disposable sterile surgical lamp shield for placement over and in proximate contact with a means for adjusting a surgical lamp in order to control an illuminated focal point produced by said lamp which significantly reduces the spread of communicable and infectious diseases which may be transmitted through contact with human body fluids and tissues during a first and subsequent use of said surgical lamp and said surgical lamp adjusting means in conjunction with the treatment of a plurality of patients eliminating the need for repeated sterilization of said surgical lamp and said surgical lamp adjusting means between such uses for the plurality of patients comprising an elongated substantially cylindrical lower gripping portion conjoined to an inverted conically shaped upper flange portion terminating in a stiffening radial rib means surrounding a substantially circular aperture defined by said upper flange portion, said radial rib means being expandable, for fitting over surgical lamp adjusting means of various sizes and surgical lamp adjusting means supports of various sizes, which connect said surgical lamp adjusting means to said surgical lamp; to provide a gripping portion of the surgical lamp adjusting means without contamination of said surgical lamp, said surgical lamp shield having sufficient elastic material memory to maintain itself in position covering said surgical lamp adjusting means without slippage until manual removal.

5,700,086

MIXING DEVICE WITH AXIALLY MOVABLE SHAFT FOR MAINTENANCE PURPOSES

Kjell Forslund, Sundsbruk, Sweden, assignor to Sunds Defibrator Industries AB, Sweden

Filed Nov. 2, 1995, Ser. No. 552,273

Claims priority, application Sweden, Nov. 3, 1994, 9403761

Int. Cl.^{6} **B01F** *7/00*

U.S. Cl. 366—172.2 **16 Claims**

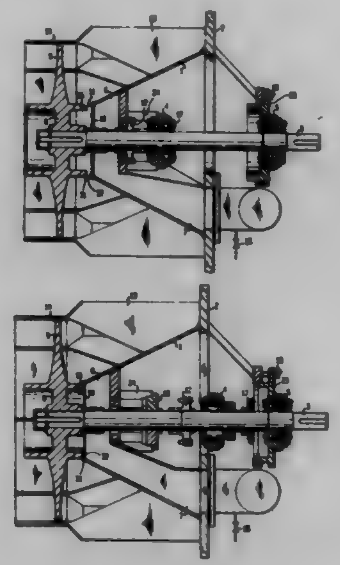

1. An apparatus for mixing a processing medium with a suspension contained in a vessel comprising: a housing adapted for attachment to a wall of said vessel, said housing including an opening, a rotary shaft extending through said opening in said housing into said vessel, bearing means supporting said rotary shaft within said housing, sealing means for sealing said rotary shaft within said housing, a propeller including a hub attached to said rotary shaft within said vessel, said hub including a sealing portion adopted for sealingly engaging said opening in said housing, said rotary shaft being axially movable between a normal operating position wherein said hub and said opening in said housing are separated by a gap and a sealed position wherein said gap is closed and said sealing portion of said hub sealingly engages said opening in said housing, and locking means for locking said rotary shaft in said sealed position, said locking means comprising a split cylindrical ring for guiding and locking said rotary shaft whereby said locking means can support said rotary shaft in place of said bearing means when said rotary shaft is in said sealed position and whereby when said rotary shaft is locked in said sealed position, said housing is accessible and said bearing means and said sealing means may be maintained or replaced while said vessel remains filled with said suspension.

5,700,087

DEVICE MAXIMIZING DISPERSION OF AGGREGATE IN LIQUID DILUENT

Arnold H. Beckett, 20 Braybrooke Gardens, Fox Hill, Upper Norwood, London, England, SE19 2UN; James E. Swon, 12 Twin Park Dr., Brookside, N.J. 07926, and Henry Z. Hofer, 30 Bruce Dr., East Hanover, N.J. 07936

Filed Oct. 6, 1995, Ser. No. 540,022

Int. Cl.^{6} **B01F** *7/16*

U.S. Cl. 366—241 **20 Claims**

1. A standardized uniform-distribution mixing device for mixing a liquid diluent suspension or a dissolution of aggregate comprising in combination:

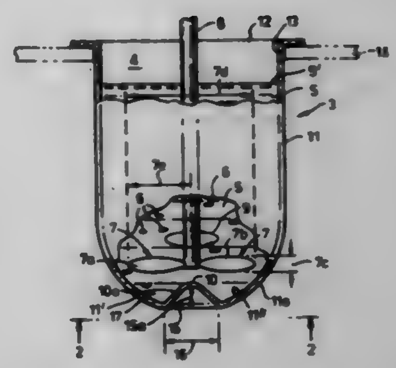

1) a vessel-mounted, substantially centered, vertical, revolvable, elongated linear shaft having distally-mounted, radially-outwardly extending, substantially equally-balanced blade portions,

said blade portions mounted around and extending substantially radially-outwardly from one another and being positioned in a downwardly positioned state when immersed within a liquid diluent contained within a liquid-containable vessel;

2) a liquid-containable vessel having a substantially hemispherical interior concave bottom,

said hemispherical interior concave bottom having a substantially centered, upwardly-extending, inverted substantially conically-shaped vessel bottom member and upwardly extending walls forming an interior liquid containable vessel-space of substantially circular cross-section,

said substantially hemispherical interior concave bottom and said substantially centered, upwardly-extending, inverted substantially conically-shaped vessel bottom member jointly in combination being sufficiently arcuate as to substantially avert any non-circulation dead-volume of any accumulated portion of either or both liquid diluent and dissolved or suspended aggregate contained by said liquid-containable vessel when said elongated linear shaft is driven at a predetermined rate and positioned in said interior liquid containable vessel space;

3) said elongated linear shaft having a longitudinal axis and being stably mounted with the blade portions positioned within and substantially centrally of and sufficiently downwardly extending into said interior liquid containable vessel-space

such that said blade portions are substantially immersed in sufficiently close proximity to and substantially space-above said substantially centered, upwardly-extending, inverted, substantially conically-shaped vessel bottom member when liquid diluent with dissolvable or suspendable aggregate is contained within said predetermined liquid-containable vessel

and whereby dissolved or suspended aggregate in said liquid diluent is substantially uniformly circulatable around said substantially centered, upwardly-extending, inverted, substantially conically-shaped vessel bottom member; and

4) a shaft driving means for revolvably driving said elongated linear shaft at said predetermined rate of revolvable mixing when said blade portions are mounted to be substantially mixably immersed within said liquid diluent containing therein aggregate dissolvable or suspendable therein, and said blade portions being substantially positioned spaced-above said substantially centered, upwardly-extending, inverted, substantially conically shaped vessel bottom member and

whereby said shaft is revolved by said shaft driving means at said predetermined rate sufficiently to achieve and maintain a substantially uniform and substantially homogenous distribution of suspendable aggregate within and throughout said liquid diluent contained in and substantially throughout said interior liquid containable vessel-space.

5,700,088
AMMUNITION PROPELLANT TEMPERATURE MEASURING ASSEMBLY

Robert A. Piacente, Schenectady; Karol Anne Liu Madulka, Ballston Spa, and John M. Kenna, Rensselaer, all of N.Y., assignors to The United States of America as represented by the Secretary of the Army, Washington, D.C.

Filed Oct. 6, 1995, Ser. No. 540,605

Int. Cl.⁶ G01K *1/16;13/00;* **G01J** *5/00;* **F41A** *31/00*

U.S. Cl. 374—141 **10 Claims**

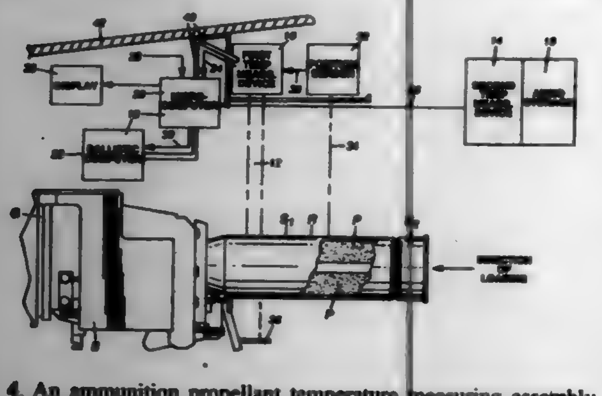

4. An ammunition propellant temperature measuring assembly comprising:

a first temperature measuring device for determining at least two surface temperatures of a round of ammunition and for transmitting a first signal indicative of said at least two surface temperatures;

a second temperature measuring device for determining ambient temperature in a storage area for said round of ammunition and for transmitting a second signal indicative of said ambient temperature; and

a computer for receiving said first and second signal and a temperature profile for said round of ammunition corresponding to a relationship between said at least two surface temperatures, said ambient temperature, and the propellant temperature, for computing therefrom the propellant temperature of said round.

5,700,089
BATTERY TESTER WITH LOAD TEMPERATURE DETECTION

Donald C. McKinnon, Cheboygan, Mich., assignor to Ferret Instruments, Inc., Cheboygan, Mich.

Filed May 8, 1996, Ser. No. 646,943

Int. Cl.⁶ G01J *5/00*

U.S. Cl. 374—142 **7 Claims**

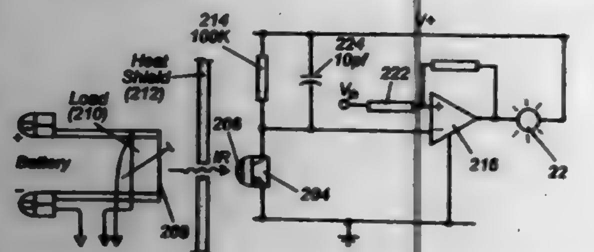

1. A battery load temperature monitoring system, comprising:

a resistive load;

means for coupling a battery to the load to perform a test on the battery;

an optical sensor supported to receive thermal radiation from the resistive load and output an electrical signal representative of the level of radiation emitted by the load; and

means connected to receive the electrical signal from the optical sensor and perform an operational function if the level of radiation emitted by the load exceeds a predetermined value.

5,700,090
TEMPERATURE SENSOR TRANSMITTER WITH SENSOR SHEATH LEAD

Evren Eryurek, Eden Prairie, Minn., assignor to Rosemount Inc., Eden Prairie, Minn.

Filed Jan. 3, 1996, Ser. No. 582,515

Int. Cl.⁶ G01K *1/08*

U.S. Cl. 374—210 **20 Claims**

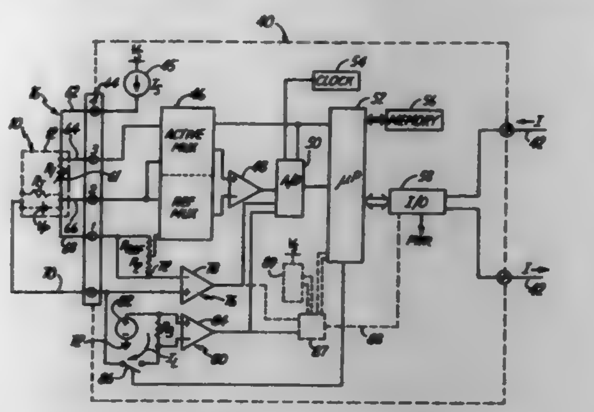

1. A temperature transmitter in a process control comprising:

a temperature sensor comprising:

a sensor sheath;

a sensor element positioned within the sensor sheath;

an element lead coupled to the sensor element and extending from the sensor sheath; and

a sheath lead coupled to the sensor sheath and extending from the sensor sheath, wherein the element lead and the sheath lead provide signals to be measured; and

a transmitter circuit comprising:

an A/D converter coupled to receive the signals from the element lead and the sheath lead;

a microprocessor coupled to the A/D converter; and

an input-output circuit coupled to the microprocessor for communication with the process control loop.

5,700,091
SNAP FASTENER AND A BAG FOR PACKAGING WITH A SNAP FASTENER

Kenichi Tanaka, and Masao Takashige, both of Himeji, Japan, assignors to Idemitsu Petrochemical Co., Ltd., Tokyo, Japan

Filed Sep. 4, 1996, Ser. No. 707,521

Claims priority, application Japan, Sep. 4, 1995, 7-226416

Int. Cl.⁶ B65D *33/24*

U.S. Cl. 383—63 **5 Claims**

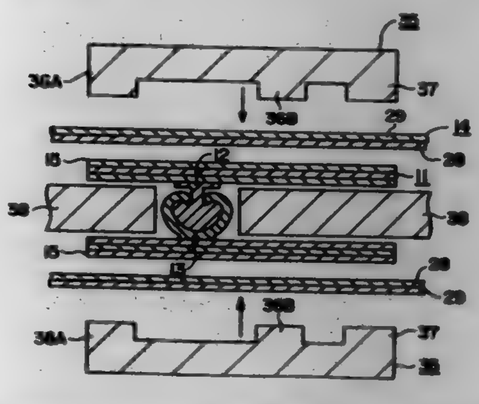

1. A snap fastener, having a male strip member and a female strip member which are mutually engaged and each has a band-like base portion and a snapping portion having a snapping function, the improvement comprising:

a first layer forming in the band-like base portion to be fused onto a bag body;

a second layer forming in the band-like base portion to be laminated onto said first layer; and

a third layer forming in the band-like base portion to be laminated onto said second layer, said first layer consisting of a resin film fusing the inner-most layer of the bag body, said second layer consisting of a biaxially oriented film, said third layer consisting of a resin film fusing the snapping portion, and the snapping portion consisting of synthetic resin having a melt index (MI) of 1–20 g/10 min.

5,700,092
INTEGRATED SHAFT SELF-COMPENSATING HYDROSTATIC BEARING

Kevin Lee Wasson, Enfield, and Alexander Henry Slocum, Concord, both of N.H., assignors to Aesop, Inc., Concord, N.H.

Continuation-in-part of Ser. No. 237,852, May 4, 1994, abandoned. This application Aug. 23, 1995, Ser. No. 518,265

Int. Cl.⁶ F16C *17/02*

U.S. Cl. 384—115 **21 Claims**

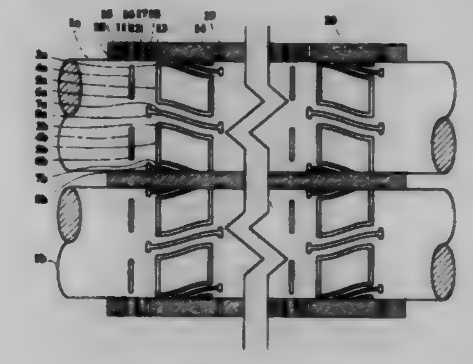

1. A self compensating hydrostatic bearing for shafts having, in combination, a cylindrical bearing bore provided with a plurality of circumferential grooves, each connected by radial hole means to pressure supply and drain systems; said grooves comprising pressure supply grooves and drain grooves axially spaced from the pressure supply grooves, and arranged in said bearing bore to serve as fluid supply and fluid drain grooves; a bearing shaft fitted into said bearing bore with a radial clearance that allows for normal shaft deflection and for a radial bearing gap for hydrostatic support action between the said bore and the said shaft; circumferential collector groove means on the surface of said shaft, comprising a plurality of grooves equally spaced around the shaft, such that when the shaft is placed in the bore, the collector grooves in the shaft are axially adjacent to the pressure supply grooves; pockets circumferentially spaced and equal in number, and axially displaced from said collector grooves such that the pockets are located between the drain grooves in said bore when said shaft is inserted therein; flow channels traversing the shaft to connect the collector grooves to the pockets and route the fluid therealong, such that when the fluid flows axially from said pressure grooves across the shaft into said collector grooves, in proportion to the radial clearance between the surface of said shaft and said bore, it can flow to the pocket opposite to the collector, and thus act to provide a restoring force in proportion to the radial displacement of the shaft.

5,700,093
BEARING STRUCTURE

Nobutaka Hiramatsu; Mitsuru Sugita; Yoshikazu Mizuno, and Takayuki Shibayama, all of Nagoya, Japan, assignors to Daido Metal Company Ltd., Nagoya, Japan

Filed Feb. 7, 1997, Ser. No. 797,245

Claims priority, application Japan, Feb. 29, 1996, 8-071268

Int. Cl.⁶ F16C *9/04*

U.S. Cl. 384—276 **5 Claims**

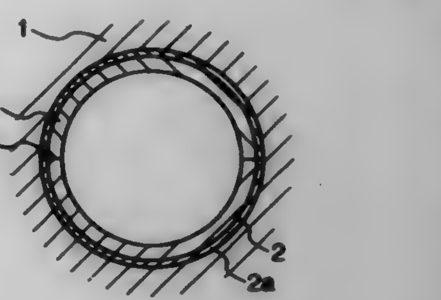

1. A bearing structure of a sliding bearing which is held in a housing and which rotatably supports a rotary shaft, wherein at least one of the outer surface of said sliding bearing and the inner surface of said housing is covered with a coating layer which essentially consists of, by weight, a total amount of not more than 90% of solid lubricant and hard particles wherein the solid lubricant is of 3 to 50% and the hard particles are of 1 to 50%, and the balance of polyamide-imide resin.

5,700,094
BEARING ASSEMBLY HAVING IMPROVED FRETTING AND ABRASION RESISTANCE

Chuong Q. Dam, Peoria; Gregory G. Hafner, Normal, and Kenneth W. Burris, Peoria, all of Ill., assignors to Caterpillar, Inc., Peoria, Ill.

Filed Jan. 25, 1996, Ser. No. 591,060

Int. Cl.⁶ F16C *33/30*

U.S. Cl. 384—569 **10 Claims**

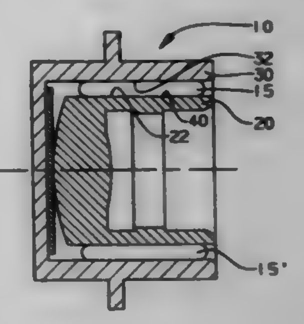

1. A needle bearing assembly for an axial piston pump, comprising:

an inner race having a first planar surface;

an outer race having a second planar surface, said outer race being spaced apart from said inner race;

a plurality of rolling elements disposed in the space between said inner race and said outer race, said rolling elements being in oscillatory rolling contact with said first planar surface and said second planar surface; and

an abrasion resistant coating deposited on at least one of said first planar surface and said second planar surface, said coating being one of chromium nitride, chromium carbonitride, or mixtures thereof, and said coating having a thickness in the range of about 0.001 mm to about 0.01 mm.

5,700,095
PRINT GAP ADJUSTOR IN A SERIAL PRINTER
Wataru Sugiyama, Nagoya, Japan, assignor to Brother Kogyo Kabushiki Kaisha, Nagoya, Japan
Filed Dec. 27, 1995, Ser. No. 579,157
Claims priority, application Japan, Feb. 3, 1995, 7-039032
Int. Cl.^{6} B41J *25/308*
U.S. Cl. 400—55 **18 Claims**

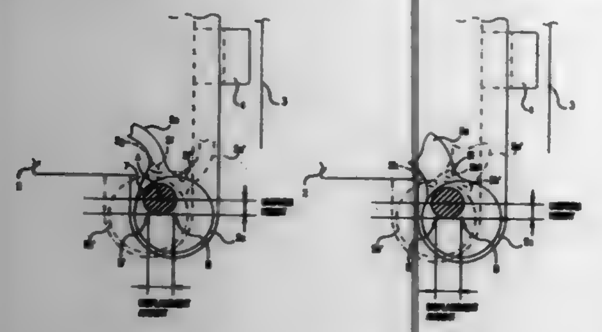

1. A printer of the type of printers capable of adjusting the interval between a print paper and a print head of the printer which prints on the print paper according to the thickness of the print paper, comprising:

a carriage holding the print head and for moving linearly back and forth along the print line of the print paper;

a guide member to guide the carriage to move linearly back and forth;

a decentering collar fitted on the external surface of the guide member in such manner that the collar is allowed to slide along and rotate on the guide member, the decentering collar holds the carriage in such manner that the decentering collar rotates within a cylindrical opening in the carriage, an axis of the decentering collar is offset by predetermined decentering amount with respect to an axis of the guide member; and

a positioning member to position the decentering collar in at least one of two rotational positions by rotating on the external surface of the guide member such that heights of the shifted positions in the direction of feed the print paper are the same so that the pitch of the print head relative to the print paper is unchanged, the positioning member including a position determining member to determine a relative position between the decentering collar and the carriage, wherein adjustment of the interval between the print paper and the print head is enabled by moving the carriage toward or away from the print paper through rotation of the decentering collar around the guide member, and the shift mount of the center of rotation to hold the carriage can be determined by the position determining member.

5,700,096
PRINTER AND METHOD OF PRINTING USING THE SAME
Mitsuyoshi Satoh; Hideo Numabe, and Hideaki Matsuda, all of Miyagi-ken, Japan, assignors to Tohoku Ricoh Co., Ltd., Miyagi-ken, Japan
Filed Jan. 26, 1994, Ser. No. 187,344
Claims priority, application Japan, Jan. 29, 1993, 5-013553; Apr. 15, 1993, 5-088848
Int. Cl.^{6} B41J *33/44*
U.S. Cl. 400—225 **18 Claims**

1. A printer for printing on a recording medium using a transfer medium comprising:

a recording means for recording on said recording medium by supplying energy to said transfer medium;

a transfer medium reversely conveying amount information management means for managing the conveying amount information of said transfer medium in the direction reverse to the normal direction toward said recording means; and

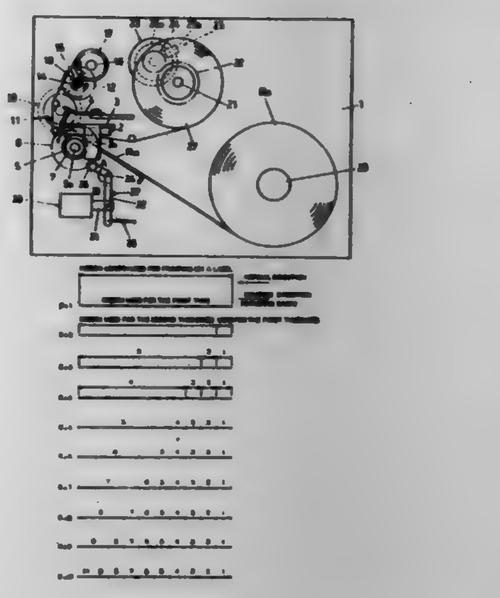

a transfer medium conveying means which conveys said transfer medium in said normal direction and reverse direction and conveys said transfer medium based on the reversely conveying amount information managed by said transfer medium reversely conveying amount information management means when said transfer medium is conveyed in the reverse direction, wherein the conveying amount of the transfer medium in the reverse direction is performed to an extent such that previously used portions of the transfer medium are conveyed past said recording means in the reverse direction.

5,700,097
CHILDREN'S COMPUTER KEYBOARD
Richard E. Kuhlenschmidt, 620 Via de la Paz, Pacific Palisades, Calif. 90272
Continuation-in-part of Ser. No. 500,452, Jul. 10, 1995, abandoned. This application May 20, 1996, Ser. No. 650,301
Int. Cl.^{6} B41J *5/10*
U.S. Cl. 400—487 **3 Claims**

1. An improved children's computer keyboard comprising:

a numerical key group, an alphabetical key group, a programmable function key group, a punctuation and text-editing key group, and a cursor control key group, each of said groups of keys being a different color;

each of said key groups consisting of square or rectangular keys with enlarged top surface and base dimension relative to those of conventional keyboards wherein

a.) said top surface of rich said key being ¾" from end to end along a line that is parallel to at least one top surface edge; and

b.) said base dimension of each said key being 1" from end to end along a line that is parallel to at least one base dimension edge.

5,700,098
PRINTING DEVICE
Michael Andrew Beadman, and Ian Thompson-Bell, both of Herts, United Kingdom, assignors to Esselte N.V., St. Niklaas, Belgium
Continuation of Ser. No. 94,660, Jul. 20, 1993, abandoned. This application Oct. 24, 1995, Ser. No. 545,446
Claims priority, application United Kingdom, Jul. 24, 1992, 9215740
Int. Cl.^{6} B41J *11/44*
U.S. Cl. 400—615.2 **20 Claims**

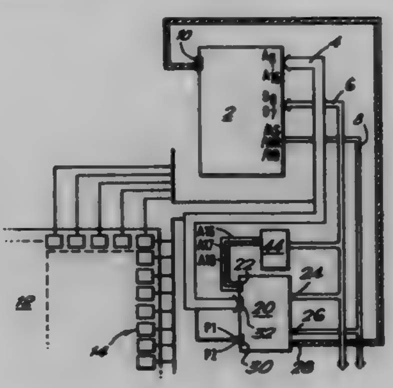

1. A printing device comprising:

a printing mechanism for printing characters onto an image receiving tape;

an input device for inputting information for controlling operations of the printing device;

a controller coupled to the input device to receive control signals therefrom and operable to utilize the control signals to provide address signals for accessing data items for defining said characters to be printed and control data for controlling operations of the printing mechanism;

an address bus coupled to said controller;

a data bus for supplying said data items to the printing mechanism;

a control bus for supplying the control data to the printing mechanism; and

an interface connected to the address bus, the data bus and the control bus and having an address connection port, a data connection port and a control connection port adapted for connection to the respective corresponding ports of an external cartridge, whereby said external cartridge can supplement the operations of the controller,

said data bus and said control bus being additionally coupled to said controller, with said input device and said external cartridge being contemporaneously usable with said controller, whereby said controller selectively supplies said data items and said control data to said printing mechanism.

5,700,099
INK JET PRINTER
Yoichi Kobayashi, and Kiyoto Komuro, both of Nagano, Japan, assignors to Seiko Epson Corporation, Tokyo, Japan
Filed Apr. 19, 1996, Ser. No. 635,317
Claims priority, application Japan, Apr. 21, 1995, 7-120762
Int. Cl.^{6} B41J *11/58*
U.S. Cl. 400—625 **38 Claims**

1. A paper discharge section for a printer having a printer body, said discharge section comprising:

a first support assembly mounted on said printer body and a second support assembly mounted on said printer body and spaced apart from said first support assembly, said first support assembly supporting a respective first bottom side portion of a sheet of paper discharged from said printer body and said second support assembly supporting a respective second bottom side portion of a sheet of paper, at least said first support

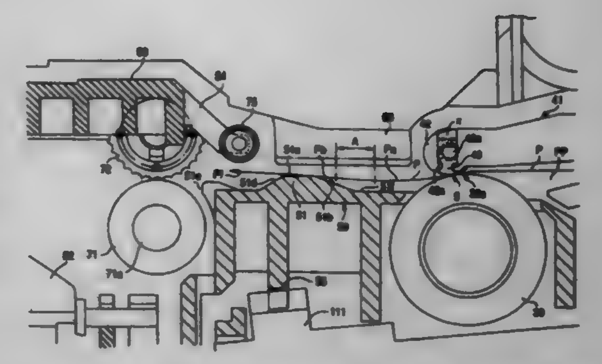

assembly being a slidable support assembly slidable in a first direction along a slide path toward said second support assembly and a second direction away from said second support assembly;

said first support assembly including a first support member rotatable between a first position for supporting a first bottom side portion of a sheet of paper with a first support surface and at least a second position in which said first support member does not support said first bottom side portion of a sheet of paper;

a switch mounted on said printer body, said switch selectively causing said first support member to rotate between a first position for supporting a first bottom side portion of a sheet of paper to a second position in which said first support member does not support a first bottom side portion of a sheet of paper and from said second position to said first position.

5,700,100
MASCARA CONTAINER HAVING A STIRRER AND A SEPARATE WIPER
Walter T. Ackermann, Watertown, Conn., assignor to Risdon Corporation, Naugatuck, Conn.
Filed Feb. 20, 1997, Ser. No. 803,000
Int. Cl.^{6} A45D *40/00*
U.S. Cl. 401—4 **6 Claims**

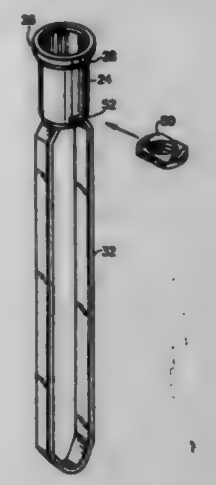

1. In a mascara container having a cylindrical body comprising a side wall and a circular bottom end wall and an externally threaded reduced neck at the upper end, a stirrer for said container comprising a molded plastic hub rotatably secured in the neck and a collapsible agitator within the container and secured to and integrally molded with the hub, the agitator being in the form of an oblong open frame of uniform cross-section and having straight parallel side elements and semicircular ends, the hub having an opening therethrough, an internally threaded cap for the container and an elongate mascara applier secured to and extending axially from the cap through the opening in the hub, the end of the applier proximate the cap being keyed for rotation with the hub; the

improvement of the hub having a transverse slot with parallel edges extending therethrough and being wider than and intercepting the opening in the hub, and an annular wiper having outer portions of the same outside diameter as the outside of the hub, the wiper receiving the applier through its opening.

5,700,101
WRITING TOOL

Shuhei Kageyama; Toshihiko Kageyama; Youichi Nakazato, and Yoshihide Mitsuya, all of Saitama-ken, Japan, assignors to Kotobuki & Co., Ltd., Kyoto, Japan

Division of Ser. No. 69,518, Jun. 1, 1993, abandoned, which is a division of Ser. No. 924,854, Aug. 4, 1992, Pat. No, 5,236,270, which is a division of Ser. No. 696,197, May 6, 1991, Pat. No. 5,207,522, which is a division of Ser. No. 274,297, Nov. 21, 1988, Pat. No. 5,062,727, which is a division of Ser. No. 255,101, Oct. 7, 1988, Pat. No. 5,022,774. This application Feb. 17, 1994, Ser. No. 198,150

Claims priority, application Japan, Oct. 19, 1987, 62-155300; Oct. 19, 1987, 62-155301; Oct. 19, 1987, 62-155302; Nov. 19, 1987, 62-170189; Nov. 19, 1987, 62-1701090; May 19, 1988, 63-66194

Int. Cl.⁶ B43K *25/00;21/10*

U.S. Cl. 401—52 **3 Claims**

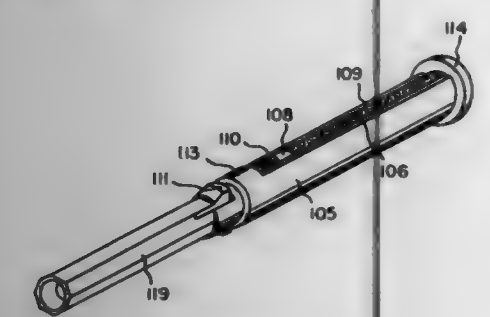

1. A writing instrument comprising;
a tubular body containing a writing refill;
propelling means detachably disposed on a rear end of said tubular body for spirally propelling a stick-shaped object therefrom;
said stick-shaped object propelling means comprising;
an outer tubular member having a spiral groove and an annular projection formed on an interior surface thereof;
holding means for holding said stick-shaped object inside said outer tubular member, said holding means having one or more projections;
a guide member having engaging portions at rear and intermediate portions thereof to engage and hold said outer tubular member rotatable relative to said guide member,
said engaging portions comprising one or more projections formed on an intermediate portion of said guide member by a stepped section cut into an outer surface of said guide member, said projections having a forward sloping surface and a slit formed around the forward sloping surface to facilitate installation and assembly by allowing said projections to easily deform radially over said annular projection on said outer tubular member;
said guide member having at least one lengthwise slit for receiving said one or more projections on said holding means to slidably retain said holding means in said guide member;
said one or more projections on said holding means engaging said spiral groove in said outer tubular member;
whereby a stick-shaped member in said holding means is spirally propelled into or out of said detachable means.

5,700,102
SHELTER FRAME CONNECTOR SYSTEM

Richard Feleppa, 1971 NW. 35th Terrace, Coconut Creek, Fla. 33066

Filed Feb. 20, 1996, Ser. No. 604,151

Int. Cl.⁶ F16B *7/10*

U.S. Cl. 403—170 **18 Claims**

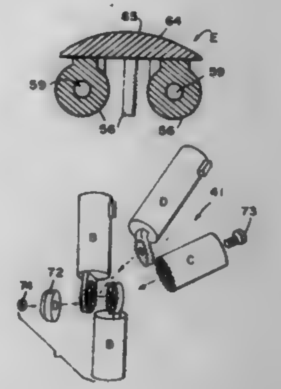

11. A system of modules having different structures which are removably joinable together by a bolt or screw fastener to form a plurality of connectors having different configurations, the connectors adapted for connecting elongate rigid cylindrical elements together to form a variety of different frame shapes, the modules comprising:
a) a first module having a tubular member with a long axis and a circular cross section, an open first end and a second end, the tubular member adapted for receiving through the first end an elongate rigid cylindrical element; screw means connected to the member for effecting a binding action on the rigid element; a lug attached to the second end,
the lug having two parallel, broad faces, the broad faces each seing provided with intermeshing means arranged contiguously and continuously through 360° in a circular annulus about a center to mate with similar intermeshing means at adjustable angles, the faces being disposed in planes parallel to said long axis on opposite sides thereof; and a bolt hole passing through both faces at the center of the annulus; and
b) a second module having a tubular member with a long axis and a circular cross section an open first end and a second end, the tubular member adapted for receiving through the first end an elongate rigid cylindrical element; screw means connected to the member for effecting a binding action on the rigid element; a lug attached to the second end, the lug having two parallel, broad faces, the broad faces each being provided with intermeshing means arranged contiguously and continuously through 360° in a circular annulus about a center to mate with similar intermeshing means at adjustable angles, the faces being disposed in planes parallel to one another, with one of the planes substantially in common with said long axis: and a bolt hole passing through both faces at the center of the annulus.

5,700,103
MOUNTING STRUCTURE

Chun-Hsin Tsai, NO. 38, Lane 49, Chien Fu Rd., Hsin Chuang City, Taipei Hsien, Taiwan

Filed Jul. 8, 1996, Ser. No. 676,922

Int. Cl.⁶ F16B *5/02;37/04*

U.S. Cl. 403—260 **1 Claim**

1. A mounting structure, comprising:
a locking plate that is substantially a plate-like structure having a locking hole at a central position, said locking hole being obliquely cut so that an inner ring thereof forms a spiral shape to facilitate driving of a screw thereinto, said locking plate having three substantially L-shaped pawls at its outer edge,

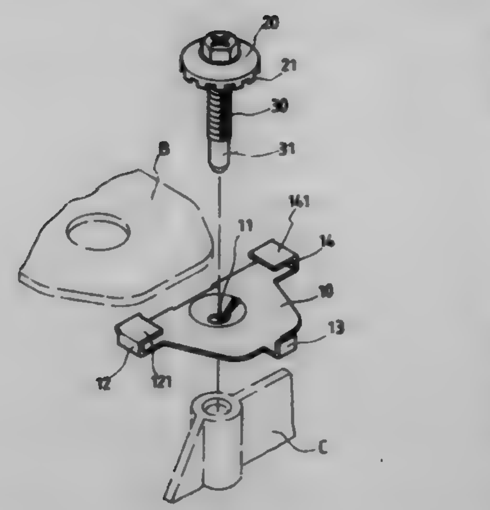

said pawls being spaced apart with two of said pawls opposite each other and one of said pawls facing an open end, a distance from each of said pawls to the center of said locking hole being equivalent to a distance from the center of a through hole of a mount to an outer periphery of said mount, said opposite pawls each having a plate portion at a top side thereof such that said locking plate may firmly retain said mount, said plate portions of said two opposite pawls and a bottom plate of said locking plate flaring slightly outwardly in the direction of said open end so that said mount may be smoothly fitted into said locking plate; and a screw with a washer, said screw having an elongated tip forming a guide portion, said washer having a bottom side with an outer periphery having a plurality of tooth-like portions.

5,700,104
SYSTEM OF FIXATING A SHAFT

Thomas Hehl, Bietigheim-Bissingen, and Hans Prohaska, Rottenburg, both of Germany, assignors to ITT Automotive Europe GmbH, Germany

Continuation of Ser. No. 367,345, Apr. 24, 1995, abandoned. This application Oct. 31, 1996, Ser. No. 742,275

Claims priority, application Germany, Sep. 4, 1992, 42 29 496.7

Int. Cl.⁶ B25G *3/34*

U.S. Cl. 403—265 **8 Claims**

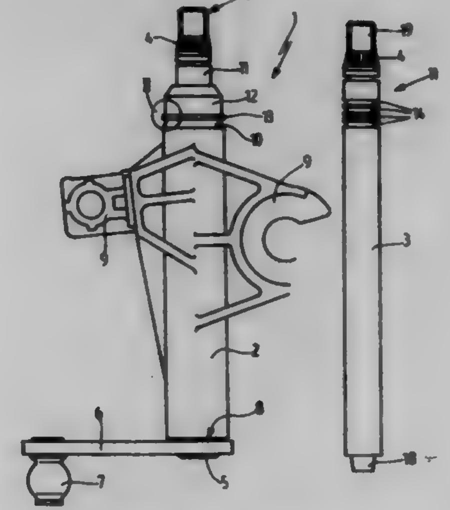

1. A method of fixating a shaft axially in its bearing casing in wiper installations, said shaft having a portion which axially projects from an axial end of the bearing casing wherein said axially projecting portion includes an annular groove, comprising the steps of:
inserting and aligning the shaft in its bearing casing, and
molding plastic or metal around said annular groove wherein the shaft is heated to 200° C. ±30° C. prior to injection molding.

5,700,105
MOUNTING PLATE PAIR FOR THE FASTENING OF HINGE ARMS OF FURNITURE HINGES OR SIMILAR

Luciano Salice, Carimate, Italy, assignor to Arturo Salice S.p.A., Novedrate, Italy

Filed May 15, 1996, Ser. No. 647,808

Claims priority, application Germany, May 18, 1995, 29508286 U

Int. Cl.⁶ A47B *96/00;* **E05D** *5/00*

U.S. Cl. 403—408.1 **20 Claims**

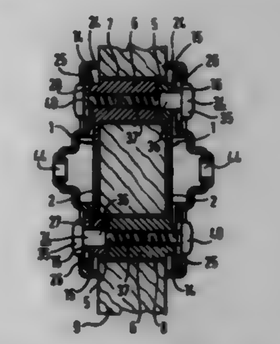

1. A mounting plate pair for the fastening of hinge arms of furniture hinges or similar, comprising
two base plates (1) with cylindrical extensions (5, 6) standing at right-angles on these and provided with boreholes (3, 4) and able to be fitted from opposite sides into through-holes (7, 8) of a wall (9), and
two top plates (20) overlapping or covering at least in part each of the base plates (1), the top plates (20) being provided with fastening means (44) for securing the hinge arms, the top plates (20) each comprising oblong fastening holes (27, 28) arranged lengthways on a common center line (29) and into which screws (34, 40) comprising a longer screw (34) and a shorter screw (40) gripping in the boreholes (3, 4) of the extensions (5, 6) can be screwed, of which the longer screw (34) in each case penetrates through one of the boreholes (3) of the first base plate (1) and enters the other of the boreholes (4) of the oppositely-arranged second base plate (1) in the screwed-in state,
wherein in the screwed-in state, one of the extensions (5, 6) of the first base plate (1) and one of the extensions (6, 5) of the oppositely-arranged second base plate (1) are in alignment in one of said through-holes (7, 8), thus forming an extension-pair, and
the extensions (5, 6) of each extension-pair are braceable to one another by means of the first, longer screw (34) inserted from the side of the first base plate (1), while the second, shorter screw (40) inserted from the side of the oppositely-arranged second base plate (1) serves to fix the therewith associated top plate (20) to the second base plate (1).

5,700,106
ISLAND FORM

James E. Young, 406 Inglenook Pl., and Roy A. Meyer, 1000 Crestview Dr., both of Angola, Ind. 46703

Filed Mar. 12, 1996, Ser. No. 614,283

Int. Cl.⁶ E01C *11/22*

U.S. Cl. 404—8 **4 Claims**

1. A form for receiving liquid concrete therein comprising:

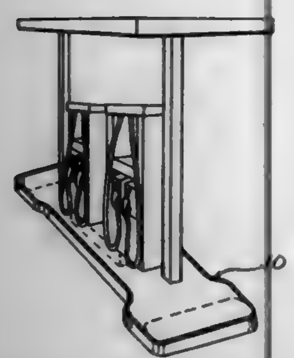

a plurality of elongated wall members each wall member having first and second ends and an inner surface wherein the elongated wall members are contiguously positioned in end to end alignment to form an enclosure, wherein a first end of one elongated wall member is adjacent a second end of an adjacent wall member;

means for connecting adjacent wall members wherein the connecting means includes a key attached to the inner surface of the wall proximate to the first end and extending beyond the first end and an interlocking bracket attached to the inner surface at the second end for receiving said key; and

further including a support brace having flanged ends, said support brace extending to opposing wall members, wherein the inner surfaces of the opposing wall members have locking shelves for receiving the flanged ends of the support brace.

5,700,107

METHOD OF SOIL REMEDIATION

Jeffrey P. Newton, Ithaca, N.Y., assignor to Habour Remediation and Transfer Inc. (HR&T), Toronto, Canada

Filed Jul. 25, 1995, Ser. No. 507,802

Int. Cl.⁶ A62D *3/00;* **B09C** *1/06;1/08*

U.S. Cl. 405—128 **16 Claims**

8. A method of treating material contaminated with organic pollutants, the method comprising providing material contaminated with organic pollutants, contacting the material with a matrix-generating agent capable of generating with the material a catalytically active alumino-silicate matrix, intimately mixing the material and matrix-generating agent, and maintaining the temperature of the resultant mixture at a level sufficiently high for a sufficient period to produce kerogenic compounds within said mixture.

16. A method of remediating soil contaminated with organic or inorganic pollutants, the method comprising contacting the soil with a complexing agent and a matrix-generating agent capable of authigenically generating within the soil a silicate matrix, the matrix having a plurality of catalytically active sites adapted for bonding of the pollutants, and intimately mixing the complexing agent and the matrix-generating agent with the contaminated soil to thereby authigenically generate said silicate matrix and bond said pollutants at said catalytically active sites in said matrix.

5,700,108

DYNAMIC REEF, METHOD OF USE, AND SHORELINE EROSION CONTROL SYSTEM EMPLOYING SAME

Robert J. Bishop, and Justin D. Bishop, both of 1083 Bloomfield Ave., West Caldwell, N.J. 07006

Filed Jun. 7, 1995, Ser. No. 481,615

Int. Cl.⁶ E02B *3/04*

U.S. Cl. 405—26 **19 Claims**

1. A dynamic reef comprising:

an elongated elastic member; and

a plurality of flotation collars rotatable about the elastic member, each rotation collar adapted for independent movement with respect to the elastic member and other of the plurality of flotation collars,

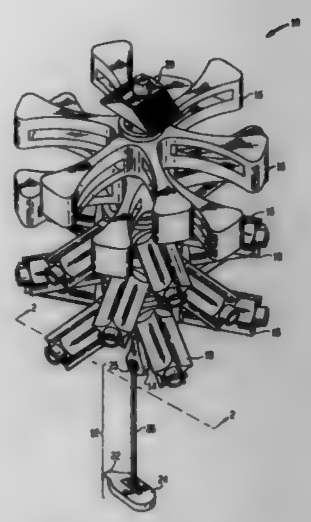

the plurality of flotation collars coacting during independent movement to dissipate wave energy.

5,700,109

TRAVELING MULTI-FUNCTIONAL DISPOSAL SIMULATION INSTALLATION

Kerstin Hund, Schmallenberg/Gleidorf; Werner Klein, Schmallenberg; Werner Kördel, Schmallenberg; Theo Görtz, Schmallenberg, and Norbert Schwarzer, Lennestadt, all of Germany, assignors to Fraunhofer-Gesellschaft zur Forderung dër Angewandten Forschung e.V., Munich, Germany

Filed Mar. 22, 1996, Ser. No. 620,569

Claims priority, application Germany, Mar. 24, 1995, 195 10 917.1

Int. Cl.⁶ B09C *1/02;1/06*

U.S. Cl. 405—128 **13 Claims**

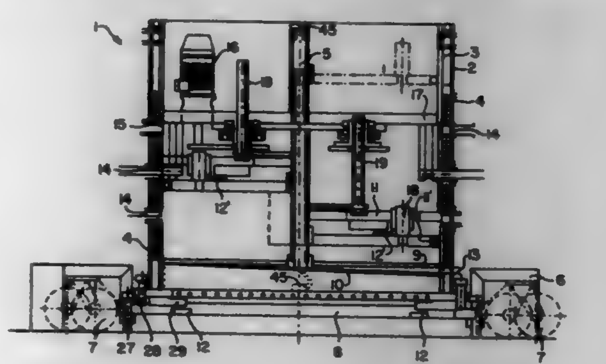

1. A movable multi-functional waste disposal simulation installation for simulating long-term behavior of disposable materials including organic components such as household rubbish, of contaminated soil and its recultivation, and of compost, said installation comprising:

a container including an inner and outer wall;

an internal base plate fixedly mounted within said container;

a horizontal base plate positioned above said internal base plate to form a support for a fill material, said horizontal base plate including a screen member, said internal base plate being positioned at a slight angle relative to said horizontal base plate;

at least one opening in said container for communicating with said internal base plate at a lowest point;

a lid extending in a gas-tight manner over an internal area formed by said inner wall and vertically positionable relative to said horizontal base plate;

a travelling undercarriage for receiving said container; and

weighing devices positioned between said undercarriage and said container.

5,700,110

METHOD FOR LINING A BENT PIPE

Takao Kamiyama, Hiratsuka, and Yasuhiro Yokoshima, Ibaraki-ken, both of Japan, assignors to Shonan Gosei-Jushi Seisakusho K.K., Kanagawa-ken, and Yokoshima & Company, Ibaraki-ken, both of Japan

Filed Jan. 22, 1996, Ser. No. 589,688

Claims priority, application Japan, Jul. 7, 1995, 7-171916

Int. Cl.⁶ F16L *55/16*

U.S. Cl. 405—154 **10 Claims**

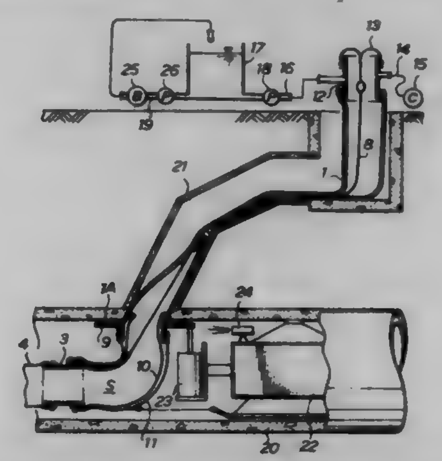

1. A method for lining a bent pipe with a tubular liner bag made of a nonwoven fabric impregnated with a hardenable liquid resin, one end of said tubular liner bag being closed, comprising the steps of:

(a) fixing one end of a flat belt at said closed end of the tubular liner bag;

(b) everting said tubular liner bag into the bent pipe;

(c) stretching said flat belt;

(d) inflating the everted tubular liner bar to press against the inner wall of the bent pipe by increasing the pressure inside the everted tubular liner bag; and

(e) hardening said hardenable liquid resin impregnated in the tubular liner bag while keeping the tubular liner bag pressed against the inner wall of the bent pipe and keeping said flat belt stretched;

wherein at said step (a) fixing the other end of said flat belt outside that end of the bent pipe from which the tubular liner bag is everted into the bent pipe; and at said step (c) before stretching the flat belt, opening said closed end of the tubular liner bag and untying the flat belt from said tubular liner bag. and retying the untied end of the flat belt to an eversion tube configured to close the opened end of the tubular liner bag.

5,700,111

APPARATUS FOR APPLYING SYNTHETIC ROVING MATERIALS AND METHOD FOR CONTROLLING THE BUILD UP OF STATIC ELECTRICITY

Randall Eugene Johnson, Ringgold, and Marcus N. Sparks, Flintstone, both of Ga., assignors to Synthetic Industries, Inc., Chickamauga, Ga.

Filed Jan. 24, 1996, Ser. No. 590,915

Int. Cl.⁶ B05B *7/04;* **C09K** *17/04;* **E02D** *17/20*

U.S. Cl. 405—258 **10 Claims**

1. A cannon for applying synthetic roving materials comprising:

feeder means for receiving and delivering a plurality of strands of synthetic roving material;

a barrel assembly having a discharge opening at one end;

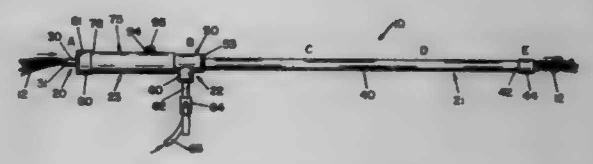

an air chamber assembly interposed between said feeder means and said barrel assembly providing air under pressure, said roving material being directed therethrough to combine with said air, whereby said air and said roving material are forcibly expelled from said barrel assembly;

a fluid housing interposed around said feeder means and carrying a volume of fluid; and

means for directing and controlling the passage of said fluid from said fluid housing into said feeder means into contact with said roving material as it passes therethrough.

5,700,112

PNEUMATIC BLOW-OFF SYSTEM AND METHOD OF OPERATION THEREOF

Richard M. Lamm, Johnstown, Pa., and Ronald Lefebvre, Hove, Belgium, assignors to Gary A. Poborsky, Johnstown, Pa.

Filed Apr. 30, 1996, Ser. No. 640,329

Int. Cl.⁶ B65G *53/28*

U.S. Cl. 406—93 **15 Claims**

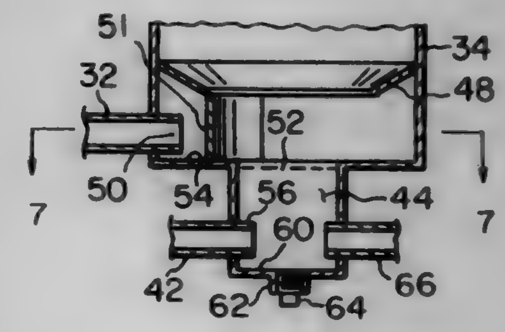

1. A pneumatic blow-off system for a tank comprising:

a three-way valve having an inlet adapted to be in flow communication with a blower, a first outlet, and a second outlet;

a fluidizing bin adapted to be in flow connection with a tank and a mixing bin in flow connection with said fluidizing bin;

a primary air conduit having a first end connected to said first outlet of said three-way valve and a distal end connected to said fluidizing bin;

a mixing air conduit having a first end connected to said primary air conduit and a second end connected to said mixing bin;

a discharge conduit in flow communication with said mixing bin;

a venturi assembly;

a distal end of said discharge conduit being in flow communication with said venturi assembly; and

a secondary air conduit in flow communication with said second outlet of said three-way valve and a distal end of said secondary air conduit connected to said venturi assembly;

wherein said fluidizing bin includes a semicylindrical baffle having a curved surface which curves away from said distal end of said primary air conduit, wherein air passing through said primary air conduit is directed against the curved surface which imparts a swirling motion thereto.

5,700,113
SPADE-TYPE BORING BIT AND AN ASSOCIATED METHOD AND APPARATUS FOR FORMING METALLIC PARTS
Paul Andrew Stone, York County, Pa., and Rickey James Thomas, Caroll County, Md., assignors to Black & Decker Inc., Newark, Del.
Filed Dec. 30, 1994, Ser. No. 366,986
Int. Cl.[6] B23B *35/00; 51/02*
U.S. Cl. 408—1 R **56 Claims**

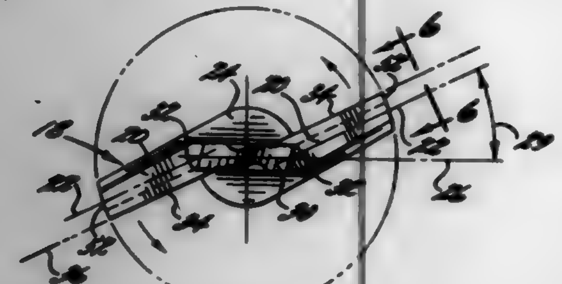

50. A method of drilling a hole in a workpiece comprising the steps of:
providing a spade-type boring bit having an elongate shank defining a central longitudinal axis, a blade portion joined to one end of the elongate shank and a spur joined to and extending axially from the blade portion wherein the blade portion includes a pair of side segments extending laterally in opposite directions from the central longitudinal axis to define respective lateral planes which are parallel to each other and the central longitudinal axis, the pair of side segments also including respective forward cutting edges, at least one forward cutting edge lying along a centerline which passes through the central longitudinal axis;
entering the workpiece with the spade-type drill bit such that the spur guides the spade-type drill bit into the workpiece;
rotating the spade-type drill bit in a predetermined direction to form a hole in the workpiece wherein said rotating step comprises the steps of engaging and removing portions of the workpiece with the forward cutting edges of the blade portion of the spade-type drill bit, thereby creating chip swarf; and
directing the chip swarf created during said rotating step in a direction perpendicular to the respective forward cutting edges;
while preventing chip swarf from migrating radially outward in the hole and binding between the spade-type drill bit and the peripheral wall of the hole created in the workpiece.

5,700,114

Patent Not Issued For This Number

5,700,115
SPEED-INCREASING SPINDLE DEVICE
Akira Chikamori, Kitakatsuragi-gun, and Shinji Yasuhara, Kashiwara, both of Japan, assignors to Koyo Machine Industries Co., Ltd., and Koyo Seiko Co., Ltd., both of Osaka, Japan
Filed Jan. 31, 1996, Ser. No. 594,849
Claims priority, application Japan, Feb. 7, 1995, 7-043547; Jan. 18, 1996, 8-024969
Int. Cl.[6] B23C *9/00*
U.S. Cl. 408—126 **16 Claims**
1. A speed-increasing spindle device comprising:
a device main body incorporating a planet speed increasing mechanism;

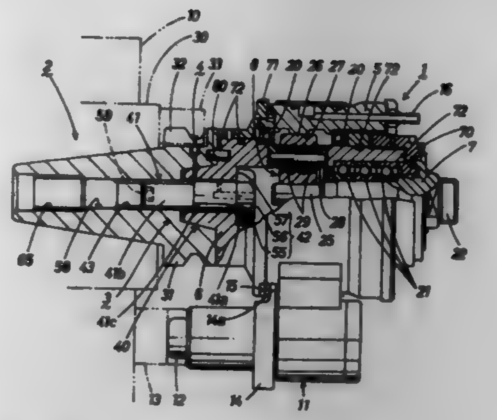

a shank detachably mounted on a main shaft of a machine tool; and
a coupling bolt means for assembling and coupling the device main body and the shank separably in the axial direction; wherein
the coupling bolt means comprises a coupling bolt, a bolt head engaging part provided at one side of the device main body, with the head of the coupling bolt engaged in the axial direction, and a screw hole provided at the other side of the device main body, in which the coupling bolt is screwed and engaged; and, further, wherein
the bolt head engaging part possesses a bolt head accommodating space larger than the maximum hole diameter permitted in the shank in terms of strength, and
the coupling bolt has an engaging part for a rotary operation tool at its outer end in the axial direction, whereby access to said engaging part is provided through an insertion hole in the shank; and wherein
the coupling bolt has its head rotatably engaged with the bolt head engaging part provided in the base end portion of the input shaft of the device main body, and its threaded part is screwed and fitted into the screw hole provided along the axial center of the shank, and the engaging part for the rotary operation tool is provided in the screw part end surface of the coupling bolt; and wherein
the bolt head engaging part comprises a bolt insertion hole communicating with the base end side of the input shaft from the accommodating space, and a coupling support part for engaging and supporting the head of the coupling bolt in the axial direction, being provided in a boundary area of the accommodating space and insertion hole.

5,700,116
TUNED DAMPING SYSTEM FOR SUPPRESSING VIBRATIONS DURING MACHINING
William T. Cobb, Jr., St. Petersburg, Fla., assignor to Design & Manufacturing Solutions, Inc., Lutz, Fla.
Continuation of Ser. No. 447,939, May 23, 1995, Pat. No. 5,518,347. This application Mar. 1, 1996, Ser. No. 609,858
Int. Cl.[6] B23Q *17/12;* **F16F** *7/108;* **G01M** *7/02;* **B23B** *25/06*
U.S. Cl. 409—141 **20 Claims**
1. A tunable damping system for use in machining apparatus, said tunable system comprising:
a) a cutting tool holder assembly including a damper mass and an adjustable mount resiliently supporting said damper mass;
b) a tuning device for adjusting the resilience of said supporting mount;
c) a lock for temporarily locking said damper mass to facilitate the determination of damping mode parameters; and
d) a tuner aid assembly including a a microprocessor, an A/D converter electrically coupled to said microprocessor, a vibration sensor mounted on said cutting tool holder assembly, said sensor being electrically coupled to said A/D converter, and an impact device for vibrating said cutting tool holder assem-

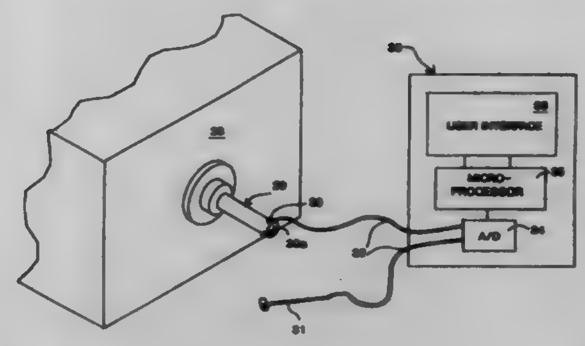

bly, said impact device being electrically coupled to said A/D converter, and programming means;
e) said programming means causing said microprocessor to evaluate the relationship between the force delivered to said cutting tool holder by said impact device and the signals from the A/D converter representing the vibrations of said cutting tool holder caused by said impact device when said damper mass is locked, and based on that evaluation to determine the most dynamically flexible mode of vibration of said cutting tool assembly;
f) said programming means further causing said microprocessor to evaluate the relationship between the force delivered to said cutting tool holder by said impact device and the signals from the A/D converter representing the vibrations of said cutting tool holder caused by said impact device when said damper mass is unlocked, and based on both said evaluations to determine what corrective adjustment of said tuning device is required to minimize vibration of said cutting tool holder assembly, whereby said tuner assembly facilitates the control of the tuning procedure.

5,700,117
MACHINE TOOL FOR MACHINING PANELS AND PLATES
Giovanni Sella, Thiene, Italy, assignor to Essetre di Sella Giovanni, Thiene, Italy
Filed Apr. 30, 1996, Ser. No. 640,167
Int. Cl.[6] B23B *35/00*
U.S. Cl. 409—164 **9 Claims**

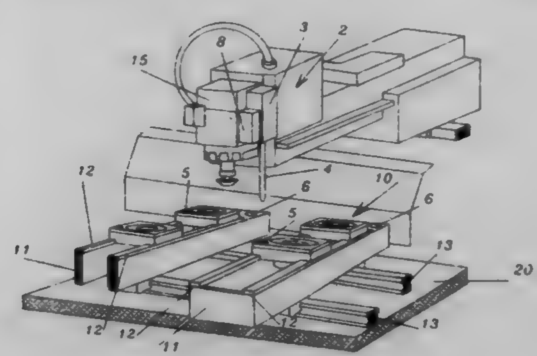

1. A machine tool for machining panels, plates and discs, the machine tool having a plurality of workpiece clamping devices (**10**) that move along a work bench (**20**) of the machine tool, the machine tool comprising:
orthogonal means (**12**, **13**) for movement of the clamping devices (**10**) over the work bench (**20**);
an operating head (**15**) mounted over the orthogonal means;
sensor means (**8**) for detecting the position of said clamping devices (**10**); and
a unit (**2**) built into the operating head (**15**) of said machine tool, which engages said clamping devices (**10**) and to move said clamping devices to preset positions on the work bench (**20**) by means of at least one relative movement between the operating head (**15**) and the work bench (**20**).

5,700,118
WALL AND LOGISTICS TRACK CONSTRUCTION FOR A REFRIGERATED VEHICLE
Paul F. Bennett; John P. Adams, and Arturo C. Gomez, all of City of Industry, Calif., assignors to Utility Trailer Manufacturing Company, City of Industry, Calif.
Filed Mar. 21, 1996, Ser. No. 619,173
Int. Cl.[6] B60P *7/135*
U.S. Cl. 410—113 **23 Claims**

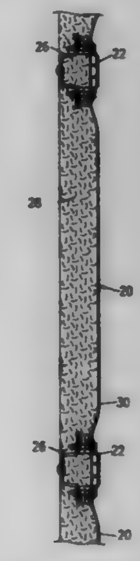

1. A wall and logistics track construction for a wall of a refrigerated vehicle, the construction comprising:
a plurality of substantially vertical posts spaced along a length of the wall,
an exterior sheet connected to said posts and extending along said length of the wall,
an interior sheet extending along said length of the wall and spaced from said exterior sheet to form a space between said interior and exterior sheets,
an elongated logistics track extending vertically for at least a portion of at least one of said posts and mounted on an interior side of said one post with said interior sheet fixed between said track and said one post, and
insulating foam filling said space between said exterior sheet and said interior sheet and causing said interior sheet to be expanded inwardly on both lateral sides of said track in an amount substantially equal to a depth of said track in a direction toward said one post, said interior sheet being substantially flat between said logistics track and an adjacent said logistics track.

5,700,119
NAIL WITH SPREADABLE LEGS
Takao Wakai, Osaka, Japan, assignor to Wakai & Co., Ltd., Osaka, Japan
Filed Aug. 1, 1996, Ser. No. 686,865
Claims priority, application Japan, Sep. 8, 1995, 7-231498
Int. Cl.[6] F16B *13/04; 15/00*
U.S. Cl. 411—78 **20 Claims**
1. A nail comprising:
two leg members made of wire, each of said two leg members having a section having a flat surface on an outer periphery thereof, and each of said two leg members having a head at one end thereof and a tip at the other end thereof; and

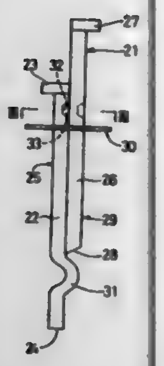

a washer adapted to be mounted on said leg members to bind said leg members together with said flat surfaces of said two leg members abutting each other;

wherein a first of said two leg members comprises a protrusion that protrudes from said flat surface of the first of said two leg members toward the second of said two leg members at a position adjacent said tip of the first of said two leg members;

wherein one of said two leg members comprises a recess formed in said flat surface thereof and an other of said two leg members comprises a projection formed in said flat surface thereof, said projection being adapted to be engaged in said recess with the respective said flat surfaces thereof abutted against each other;

wherein said recess and said projection are positioned such that when said projection is engaged with said recess, said flat surface of the second of said two leg members adjacent said tip of the second of said two leg members is positioned out of contact with said protrusion and said head of the second of said two leg members is positioned further away from said recess and said projection than said head of the first of said two leg members.

5,700,120

THREADED FASTENER AND METHOD OF IMPROVING THE FATIGUE LIFE THEREOF

Michael Patrick Manning, Watervliet, and Peter William Schilke, Scotia, both of N.Y., assignors to General Electric Co., Schenectady, N.Y.

Filed Aug. 1, 1996, Ser. No. 691,277

Int. Cl.⁶ F16B *35/00;35/04*

U.S. Cl. 411—309 **20 Claims**

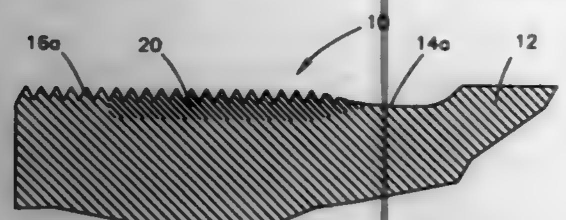

1. A martensitic stainless steel fastener that exhibits enhanced fatigue strength, the fastener comprising:

an unthreaded portion;

a transition region adjacent the unthreaded portion, the transition region having a first portion spaced apart from the unthreaded portion and a second portion immediately adjacent the unthreaded portion so as to be between the first portion and the unthreaded portion; and

a threaded portion disposed adjacent the first portion of the transition region such that the transition region is disposed between the unthreaded portion and the threaded portion, the threaded portion comprising a plurality of threads, a first set of the threads being disposed nearest the transition region and a second set of the threads being disposed furthest from the transition region, the threaded portion being characterized by a root diameter corresponding to roots of the threads; and

wherein the first set of threads are characterized as having a case-hardened region to depth below the root diameter of the threaded portion, and wherein the unthreaded portion is free of a case-hardened region.

5,700,121

SELF-LOCKING NUT

Antonio Minola, Via Castello, 24 20040, Bellusco (MI), Italy

Filed Aug. 7, 1996, Ser. No. 689,246

Int. Cl.⁶ F16B *37/08;37/16*

U.S. Cl. 411—432 **12 Claims**

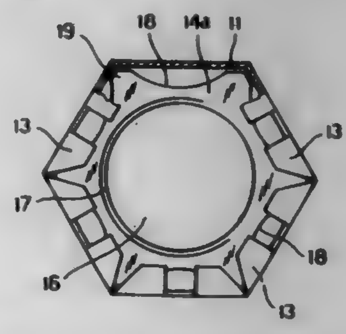

1. A self-locking nut comprising an outer case having open front and rear sides, and peripherally-arranged side walls, a set of tapered spring members, each having a threaded central bore, being stacked inside the case, and lugs inwardly bent from the side walls to retain the spring members in the outer case, wherein said set of spring members includes at least one first spring member comprising inwardly rounded peripheral edges and angularly spaced deflection legs, each of said legs radially protruding from each first spring member to engage a corresponding corner of the peripheral walls of the case.

5,700,122

QUICK TIGHTENING FASTENER

John G. Korpi, 14399 Ramblewood, Livonia, Wayne County, Mich. 48154

Filed Nov. 29, 1996, Ser. No. 758,271

Int. Cl.⁶ F16B *21/00*

U.S. Cl. 411—551 **3 Claims**

1. A quick attachment threaded fastener assembly for attaching

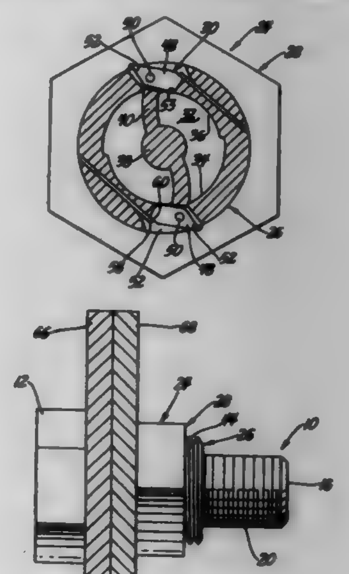

two or more pieces together comprising:

a shaped externally threaded fastener having an enlarged head portion and an elongated body portion, having a longitudinal axis, extending from said head, the body portion being formed from a plurality of spaced arcuately cross sectioned leg members, said leg members having shaped inner surfaces which define a shaped inner bore which extends along the body portion of the longitudinal axis of the externally threaded fastener, and thread segments formed on the outer surface of said legs;

a first barrel shaped engaging means having an internal surface defining an internal cavity a portion of the inner surface of the cavity being sufficiently large to allow easy longitudinal movement of the threaded fastener legs there through and a portion of the inner surface of the cavity having thread segments complimentary to the thread segments of the threaded fastener and adapted to engage the threaded fastener when the first engaging means is rotated, the engaging means having a shaped core member having an outer surface sized to engage the shaped inner bore formed by the inner surfaces of said legs to prevent said legs from collapsing inward radially, a plurality of radially disposed arms corresponding in number to the number of legs formed in the threaded fastener, the arms being attached to the inner surface of the enaging means and the outer surface of the core member, the arms holding the core member axially aligned within the bore and the arms serving to spread and maintain the legs open during longitudinal movement of the engaging means along the threaded fastener, said engaging means having a threaded outer surface;

a torque application member associated with the engaging member, the torque application member having an internally threaded bore engaging the outer threaded surface of the engaging means; and

at least one locking means associated with the engaging means, and torque application member, the locking means serving to keep the engaging member and torque application member joined until the thread segments of the engaging member have been rotated into the thread segments on the threaded fastener and then disengaging to allow the torque application member to rotate relative to the engaging member applying additional pressure to the pieces being joined.

5,700,123

DEVICE FOR HOISTING DRYWALL SHEETS WITH AUTOMATED DECK LOADING

Thaddeus Jerome Rokosh, 406 Silverthorn Close, Olds, Alberta, Canada, T4H 1B3, and Joseph Matthew Rokosh, 1411 Craig Road, Calgary, Alberta, Canada, T2V 2S9

Filed Jun. 17, 1996, Ser. No. 665,305

Int. Cl.⁶ E04G *21/14*

U.S. Cl. 414—11 **1 Claim**

1. A device for positioning drywall comprising:

a stand having a leading leg;

a main stem mounted at its bottom to the stand and having pockets at its top;

an inner pipe located inside the main stem and having pockets at its top;

an elevated horizontal hoisting deck attached to the inner pipe;

a yoke with a first end positionable in either the pockets of the stand or the pockets of the inner pipe;

a hoist for raising the inner pipe relative to the main stem;

an oblique slider attached to a second end of the yoke; and

a winch attached to the main stem, the winch having a cable;

whereby the cable may be attached to a piece of drywall and

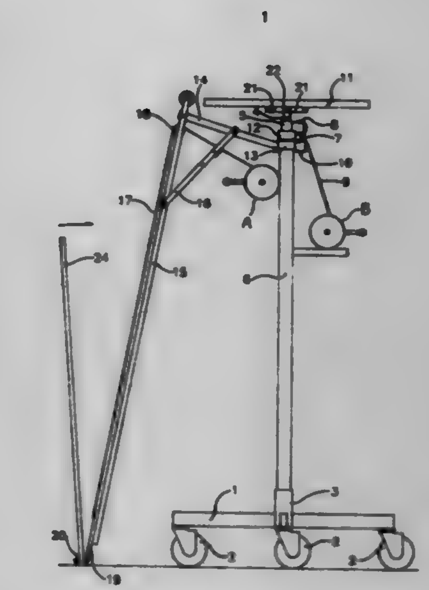

drawn in by the winch, sliding the drywall along the oblique sliders to lift the drywall to the elevated horizontal hoisting deck.

5,700,124

APPARATUS FOR COLLECTING AND TRANSPORTING BALES AND FOR FEEDING A BALE WRAPPING MACHINE

Charles Dufraisse, Thiviers Eyzerac, France, assignor to Societe C.G.A.O., La Coquille, France

Filed Jul. 27, 1995, Ser. No. 508,267

Claims priority, application France, Jul. 27, 1994, 94 09406; Mar. 24, 1995, 95 03734

Int. Cl.⁶ B60P *1/36*

U.S. Cl. 414—111 **18 Claims**

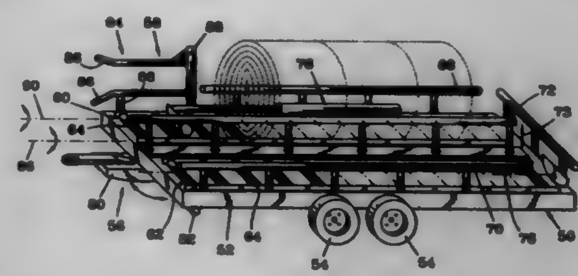

1. An agricultural apparatus for collecting and transporting bales and for feeding collected bales to a machine for wrapping the bales, said apparatus comprising:

a trailer for being moved by a tractor;

a device for connecting said trailer to the tractor for enabling said trailer to be pulled by the tractor;

at least one guideway for receiving and supporting the bales on said trailer;

a device for loading bales onto said trailer and into said at least one guideway;

said at least one guideway having an outlet for enabling unloading of the bales directly to the bale wrapping machine;

a device mounted on said trailer for moving the bales along said at least one guideway; and

means for connecting said trailer to the bale wrapping machine and for aligning said at least one guideway with a platform of the bale wrapping machine for facilitating transfer of the bales directly to the bale wrapping machine from said trailer.

5,700,125

GRAVITY FEED PASS-THRU PORT FOR AUTOMATED CARTRIDGE LIBRARY

Joseph Philip Falace, Louisville, and John David Miller, Arvada, both of Colo., assignors to Storage Technology Corporation, Louisville, Colo.

Filed Mar. 27, 1996, Ser. No. 622,306

Int. Cl.⁶ B65G *1/06*

U.S. Cl. 414—276 **24 Claims**

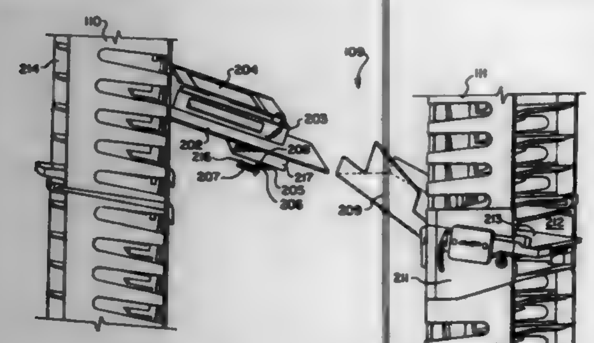

1. A pass thru port for transferring a cartridge, using only the effect of gravitational force, from an originating storage module wherein said cartridge resides at a first orientation and a first angle to a receiving storage module wherein said cartridge resides at a second orientation and a second angle, comprising:
conveying means for conveying said cartridge from said originating storage module to a rotating means,
said rotating means operable to turn said cartridge from said first orientation to said second orientation and deliver said cartridge to a pivoting means,
said pivoting means operable for receiving said cartridge from said rotating means and pivoting said cartridge from said first angle to said second angle.

5,700,126

SPOOL FEEDING METHOD AND SPOOL FEEDER

Masahiko Sekine; Osamu Zushi, both of Hiratsuka; Kenji Machijima, and Hisao Tsutsumi, both of Tokyo, all of Japan, assignors to The Yokohama Rubber Co., Ltd., and Tokyo Rope Mfg. Co., Ltd., both of Tokyo, Japan

Filed Dec. 9, 1994, Ser. No. 354,259

Claims priority, application Japan, Dec. 28, 1993, 5-335961

Int. Cl.⁶ B65G *60/00*

U.S. Cl. 414—416 **16 Claims**

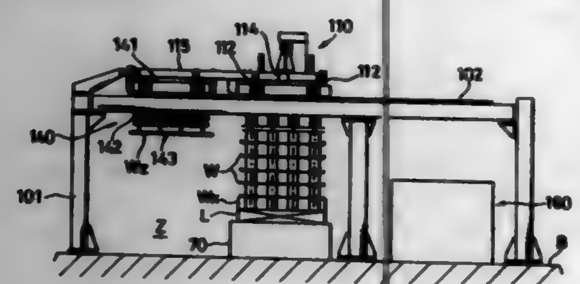

1. A spool feeder for feeding spools comprising:
at least one transferring means for transferring in a transfer direction to a spool takeout position a spool box having a plurality of spools with a cord wound on each of them, said spools being arranged with the axial direction of these spools kept in a height direction;
first holding means at the takeout position;
at least one loading means for unloading the spools from the spool box and loading the spools on said first holding means at the takeout position so that the axial direction of the spools is changed laterally from the height direction;
at least one moving means having said first holding means thereon for moving between a spool-receiving position and at least one creel stand; and
setting means for setting the spools held by the first holding means on the moving means to creel shafts laterally set on the creel stand:
wherein the moving means has at least one first moving means running in a direction perpendicular to the transfer direction of the transferring means and at least second moving means for mounting the first moving means thereon and running in the transfer direction of the transferring means, the first moving means runs between a spool receiving position facing the loading means and a mounting position mounted on the second moving means and between a sending position for sending spools from the second moving means to the creel stand and a delivery position for delivering spools to the creel stand, and the second moving means runs between the mounting position and the sending position.

5,700,127

SUBSTRATE PROCESSING METHOD AND SUBSTRATE PROCESSING APPARATUS

Junji Harada; Ichiro Harada, and Koji Nakamura, all of Kumamoto, Japan, assignors to Tokyo Electron Limited, Tokyo, Japan

Filed Jun. 21, 1996, Ser. No. 667,712

Claims priority, application Japan, Jun. 27, 1995, 7-183539; Jun. 27, 1995, 7-183540

Int. Cl.⁶ H01L *21/68*

U.S. Cl. 414—416 **21 Claims**

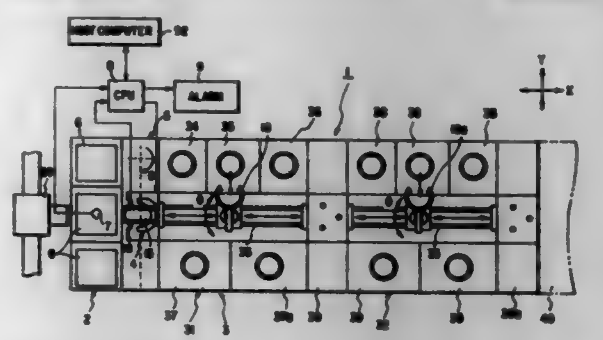

15. A substrate processing apparatus in which substrates are extracted from a supply cassette of a loading/unloading section, the extracted substrates are loaded in a processing section and sequentially processed, the processed substrates are stored in a recovery cassette of said loading/unloading section, comprising:
means for predetermining initial conditions of cassettes and substrates before processing is started;
said loading/unloading section having a placing table on which the supply and recovery cassettes are placed;
a processing section having a plurality of processing units for processing the substrates;
means for setting the supply and recovery cassettes in said loading/unloading section on the basis of the initial conditions;
a substrate transferring device for extracting substrates from the cassettes set in said loading/unloading section and conveying the substrates to said processing section;
a first sensor for detecting the substrates which are present in the cassettes set in said loading/unloading section;
means for forming mapping data of the substrates in the cassettes on the basis of the detection results from said first sensor and storing the mapping data;
control means for calling the mapping data from said data storing means and controlling said substrate transferring device on the basis of the mapping data and the initial conditions;
a second sensor for detecting the states of the supply and recovery cassettes set in said loading/unloading section; and
display means for detecting the states of the cassettes detected by said second sensor,
characterized in that said control means causes said setting means to reset the supply and recovery cassettes on the placing table according to the initial states when the states of the cassettes detected by said second sensor do not satisfy the initial conditions.

5,700,128

FEEDING OR STACKING DEVICE FOR SLAB-SHAPED WORKPIECES

Bodo Tönnigs, Lichtenberg, and Dietmar Kaden, Mulda, both of Germany, assignors to Lignatech Maschinenbau GmbH, Lichtenberg, Germany

Filed Sep. 30, 1996, Ser. No. 723,126

Claims priority, application European Pat. Off., Sep. 29, 1995, 95115457.4

Int. Cl.⁶ B65G *60/00*

U.S. Cl. 414—789.1 **10 Claims**

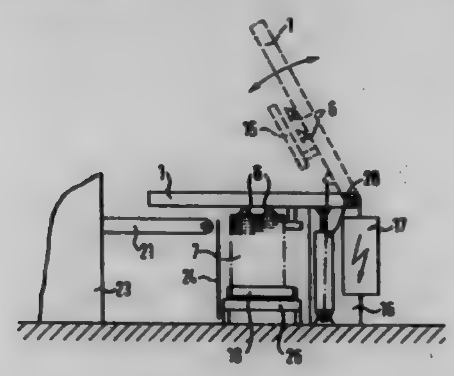

1. A feeding or stacking device for slab-shaped workpieces comprising:
a base stand,
a rigid frame pivotally mounted on said base stand for pivotal movement about a pivot axis between a horizontal position and a raised position,
a support bar movably mounted on said frame for movement along said frame toward and away from said pivot axis,
first actuator means mounted on said frame for moving said support bar,
workpiece handling means movably mounted on said support bar for movement perpendicular to said support bar,
second actuator means carried by said support bar for moving said handling means,
third actuator means mounted on said base stand for pivoting said frame about said pivot axis and
alignment means mounted on said frame for aligning a workpiece disposed in a horizontal plane.

5,700,129

TEMPERATURE-ADJUSTABLE COMPRESSOR GUIDE VANE RING

Frank Kocian, Neckartailfingen, Germany, assignor to Deutsche Forschungsanstalt fuer Luft- und Raumfahrt e.V., Bonn, Germany

Filed May 3, 1996, Ser. No. 642,340

Claims priority, application Germany, May 4, 1995, 195 16 382.6

Int. Cl.⁶ F01D *9/04;25/26*

U.S. Cl. 415—138 **22 Claims**

22. A compressor with a compressor housing, guide vanes, and an adjusting ring for the synchronous alteration of the angle of pitch of the guide vanes, wherein said adjusting ring comprises:

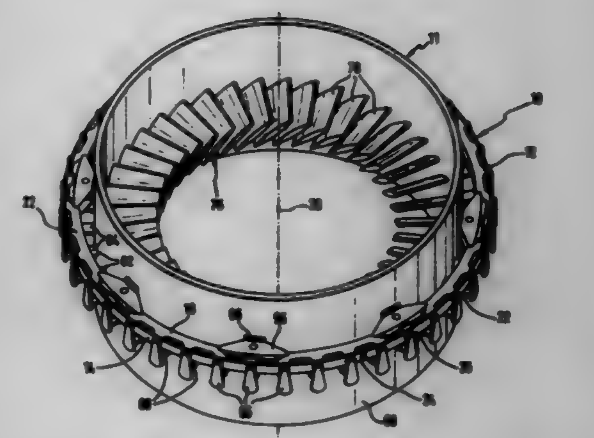

a plurality of bearing points for mounting said adjusting ring on said compressor housing;
said bearing points defining circumferentially extending curved regions of said adjusting ring such that each curved region is arranged between two adjacent bearing points; wherein:
the curvature of the curved regions decreases during an increase in the temperature of the curved regions so that the bearing points are displaced outwards in a radial direction to maintain a desired clearance between the adjusting ring and the compressor housing.

5,700,130

DEVICE FOR COOLING AND GAS TURBINE ROTOR

André M. Barbot, Cesson; Jacques E. J. Caruel, Maincy, and Marcel R. Soligny, Chevilly-Larue, all of France, assignors to Societe National d'Etude et de Construction de Moteurs d'Aviation S.N.E.C.M.A., Paris Cedex, France

Filed Mar. 9, 1983, Ser. No. 474,526

Claims priority, application France, Mar. 23, 1982, 82 04873

Int. Cl.⁶ F01D *5/08*

U.S. Cl. 416—95 **11 Claims**

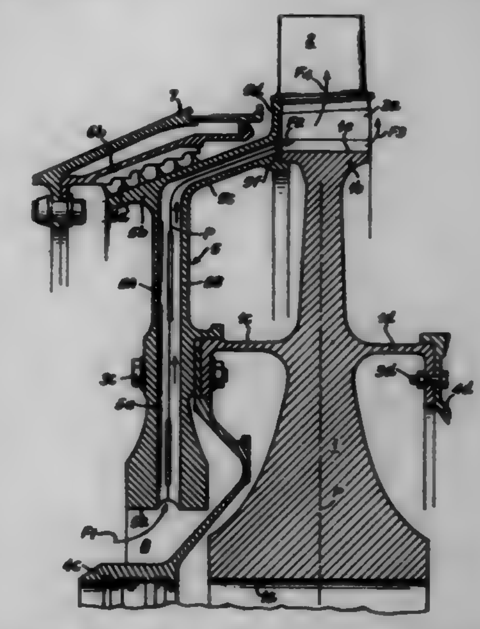

1. A device for cooling the rotor of a gas turbine rotatable about a rotor axis, the gas turbine having a compressor, with relatively low pressure air taken from the compressor and supplied to the turbine through a common shaft, said device including means for compressing the cooling air comprising a disk forming an airtight circuit integral and rotatable with the rotor, the disk having an air intake adjacent to the rotor axis and cooling air ejection orifices,

the airtight circuit communicating with the air intake and ejection orifices without a discontinuity for directing air to parts to be cooled while compressing the air, the disk further comprising a labyrinth joint, and being secured to an annular flange of the rotor on one side of the rotor, wherein the airtight circuit comprises radial passages inside the disk.

5,700,131
COOLED BLADES FOR A GAS TURBINE ENGINE
Kenneth B. Hall, Jupiter; Robert J. McClelland, and Thomas A. Auxier, both of Palm Beach Gardens, all of Fla., assignors to United Technologies Corporation, Hartford, Conn.
Filed Aug. 24, 1988, Ser. No. 236,093
Int. Cl.⁶ F01D *5/18*
U.S. Cl. 416—97 R **5 Claims**

1. A turbine blade surface for a gas turbine engine having internal passages for flowing cooling air therein, the blade having an airfoil surface defining a root section, a leading edge section, a trailing edge section, a mid chord section, and a tip section, a plurality of radial internal passages defined by internal wall means formed adjacent said trailing edge section and leading edge section extending from said root section to said tip section defining a feed channel, a plurality of radially spaced film cooling holes in said airfoil surface communicating with said feed channel to flow a film of cooling air adjacent said airfoil surface, a plurality of replenishment holes spaced radially in said wall means for flowing cooling air from said mid cord section to said feed channel to replenish the cooling air in said feed channel that is otherwise lost in supplying cooling air to said film cooling holes, and means for communicating cooling air from said root section to discharge from an orifice in said airfoil surface at said tip section, and a source of cooling air for feeding cooling air to said root section.

5,700,132
TURBINE BLADE HAVING OPPOSING WALL TURBULATORS
Elias Harry Lampes, Lynn; Craig Robert Jacobson, Peabody, and Robert Francis Manning, Newburyport, all of Mass., assignors to General Electric Company
Filed Dec. 17, 1991, Ser. No. 809,604
Int. Cl.⁶ F01D *5/18*
U.S. Cl. 416—97 R **12 Claims**

1. A turbine blade having a longitudinal axis comprising:
an airfoil having a first side and an opposite second side joined together at a leading edge and a trailing edge and extending longitudinally from a root to a tip, and an internal passage extending longitudinally between said first and second sides for channeling air to cool said airfoil;
a plurality of parallel first turbulator ribs extending from said first side into said passage and having substantially identical configurations including a first height, a first width, and being

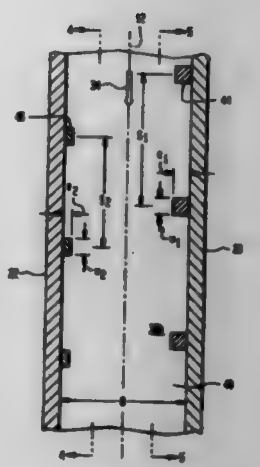

longitudinally spaced apart at a first longitudinal spacing for providing a first heat transfer enhancement for said first side;
a plurality of parallel second turbulator ribs extending from said second side into said passage toward said first ribs and having substantially identical configurations including a second height, a second width, and being longitudinally spaced apart at a second longitudinal spacing for providing a second heat transfer enhancement for said second side; and
said first and second ribs being different in configuration from each other so that said first and second enhancements are different.

5,700,133
DAMPER DISPOSITION MOUNTED BETWEEN ROTOR VANES
Jean Marc Surdi, Rubelles, France, assignor to Societe Nationale d'etude et de Construction de Moteurs d'Aviation SNECMA, Paris, France
Filed Sep. 17, 1996, Ser. No. 714,978
Claims priority, application France, Sep. 21, 1995, 95 11079
Int. Cl.⁶ F01D *5/10*
U.S. Cl. 416—248 **3 Claims**

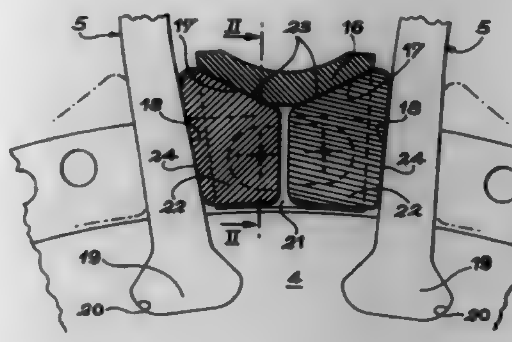

1. Damper disposition mounted between two neighbouring vanes attached to a rotor disk and including a receptacle integral with the disk and fitted with housings opening towards the lateral faces of the vanes, and inners disposed in the housings, wherein the housings are delimited radially outwardly by portions of the receptacle on which the inners slide under the effect of centrifugal forces and which are slanted radially outwardly in the direction of the vanes where the housings open.

5,700,134
DIFFUSION PUMPS
Graeme Huntley, Crawley, England, assignor to The BOC Group plc, Windlesham, England
Filed Mar. 1, 1996, Ser. No. 609,805
Claims priority, application United Kingdom, Mar. 3, 1995, 9504260
Int. Cl.⁶ F04F *9/00*
U.S. Cl. 417—153 **7 Claims**

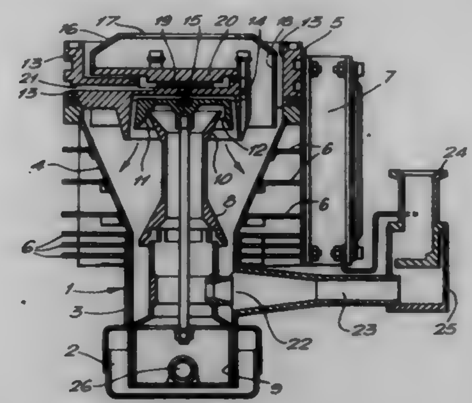

1. A diffusion pump comprising:
an outer body;
means for cooling the outer body;
chimney means positioned within the outer body;
a top cap positioned about the top of the chimney means to form at least one annular passageway therebetween;
a guard ring positioned generally above the top cap;
means for cooling the guard ring;
heater means for heating working fluid present in the base of the outer body, thereby causing evaporated oil to pass up the chimney; and
baffle means, substantially thermally isolated from the guard ring and contained within the outer body.

5,700,135
BELLOWS CAM PLATE PUMP
Iwane Inokuchi; Shigeru Kamegaya; Toshikazu Oshidari, and Atsuhiro Sakamoto, all of Yokohama, Japan, assignors to Nissan Motor Co., LTD., Kanagawa, Japan
Filed Feb. 12, 1996, Ser. No. 598,580
Claims priority, application Japan, Feb. 24, 1995, 7-037201
Int. Cl.⁶ F04B *43/00*
U.S. Cl. 417—269 **12 Claims**

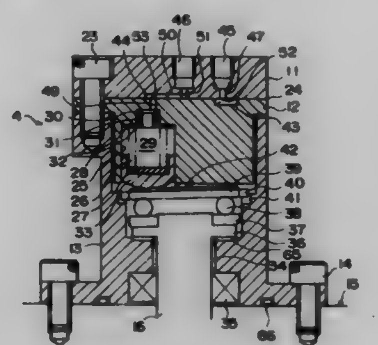

1. A bellows cam plate pump comprising
an input shaft,
a pressurizing chamber formed by a bellows that elongates and contracts along a center axis parallel to said input shaft,
a cam plate fixed at an inclination to said input shaft,
an inlet port for supplying fluid to said pressurizing chamber according to an expansion of said chamber,
an outlet port for discharging fluid from said pressurizing chamber according to a contraction of said chamber,
a piston for compressing said bellows by a displacement according to a rotation of said cam plate, said piston including a depression for accommodating one end of said bellows, and
a cylindrical means disposed substantially coaxial with said bellows for guiding the displacement of said bellows along the center axis of said bellows.

5,700,136
DIGITAL PUMP WITH BYPASS INLET VALVE
Oded E. Sturman, Woodland Park, Colo., assignor to Sturman Industries, Woodland Park, Colo.
Filed Jul. 23, 1996, Ser. No. 685,146
Int. Cl.⁶ F04B *1/26*
U.S. Cl. 417—270 **18 Claims**

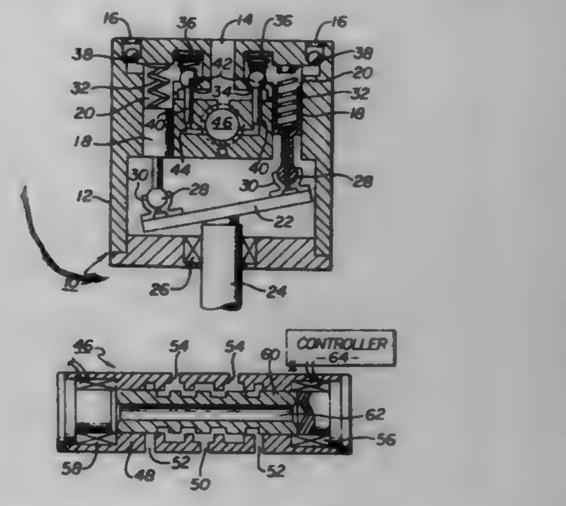

1. A pump that pumps a fluid, comprising:
a housing which has an inlet port, an outlet port and a pumping chamber;
a piston that is located within said pumping chamber and which pumps the fluid from said inlet port to said outlet port;
an intake valve that controls a flow of the fluid from said inlet port to said pumping chamber, wherein said intake valve provides fluid communication between said pumping chamber and said inlet port when in an open position; and,
a solenoid control valve which controls and provides fluid to said intake valve to move and maintain said intake valve in the open position.

5,700,137
LOW PROFILE POSITIVE DISPLACEMENT PUMP SYSTEM
Dallas W. Simonette, Andover, Minn., assignor to GP Companies, Inc., Mendota Heights, Minn.
Continuation-in-part of Ser. No. 508,586, Jul. 28, 1995, Pat. No. 5,556,264. This application Nov. 28, 1995, Ser. No. 566,369
Int. Cl.⁶ F04B *17/00*
U.S. Cl. 417—364 **18 Claims**

1. A low profile positive displacement pump, suitable for being driven by a gasoline powered engine with a rotational shaft on a first axis, comprising:
a pump housing including a fluid inlet, a fluid outlet and at least one bore fluidly connected to the fluid inlet and outlet for receiving a plunger;
at least one plunger, each plunger positioned in the bore for reciprocating movement, each plunger having a driven end and located on an axis perpendicular to the rotational shaft axis;

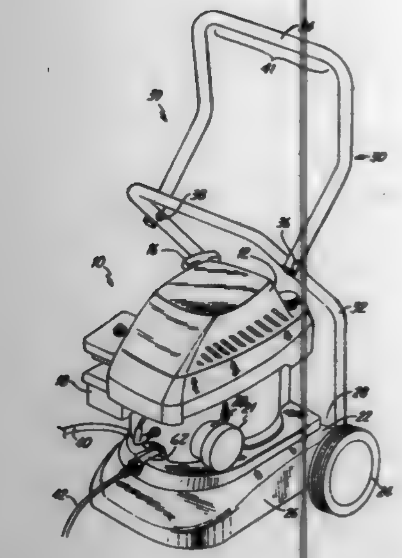

a base including a cavity for retaining the pump housing having connecting means for mounting an engine directly to the pump housing;
a heat deflecting shield attached to the base and positioned adjacent to the engine for deflecting heat produced by the engine away from the base;
a rotational pump shaft adapted for coupling to an engine shaft, the pump shaft having a central rotational axis parallel to the rotational shaft axis;
at least one eccentric camming surface on the pump shaft for contacting the driven end of the plunger and for causing the plunger to move in a first direction perpendicular to the central axis of the pump shaft;
a spring positioned in the bore for causing the plunger to move in a second direction opposite the first direction;
at least one inlet check valve mounted in the pump housing and fluidly connected to the fluid inlet;
at least one outlet check valve mounted in the pump housing and fluidly connected to the fluid outlet; and
an unloader valve mounted in the pump housing and fluidly connected to the fluid outlet and fluid inlet; and
wherein the base is adapted for mounting directly to a mounting flange of a gasoline powered engine and wherein the base fixes the position of each eccentric camming surface with respect to each driven end.

5,700,138
CENTRIFUGAL PUMP
Jack T. Bevington, Ashland, Ohio, assignor to McNeil (Ohio) Corporation, St. Paul, Minn.
Continuation-in-part of Ser. No. 517,341, Aug. 21, 1995, Pat. No. 5,549,447. This application Dec. 26, 1995, Ser. No. 578,739
Int. Cl.⁶ F04B *17/00*
U.S. Cl. 417—366 **19 Claims**

1. Apparatus adapted to be submersed in a fluid and to pump the fluid to a remote location comprising a casing, a discharge bowl at the top of said casing through which the fluid may pass to the remote location, a pump assembly within the casing, said pump assembly having an inlet area on one side thereof and a discharge area on the other side thereof adjacent to said discharge bowl, a motor within said casing, a shaft driven by said motor and carrying a portion of said pump assembly, fluid inlet openings formed through said discharge bowl, and passageways between said inlet openings and said inlet area of said pump assembly so that fluid

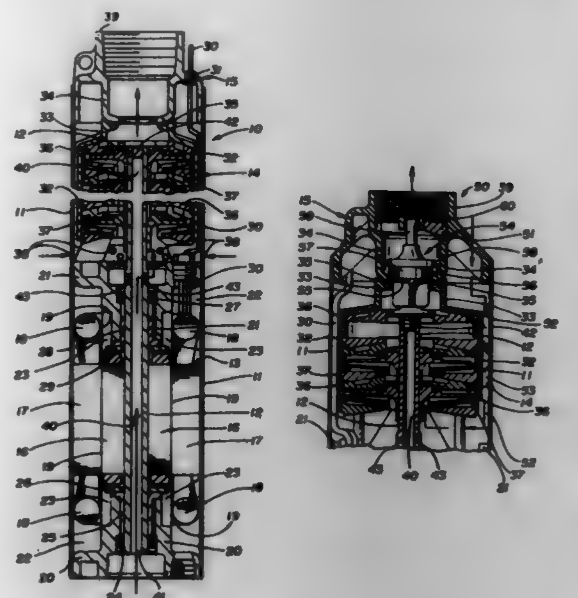

passes downwardly through said openings and said passageways to said inlet area to be pumped by said pump assembly through said discharge bowl to the remote location.

5,700,139
FUEL INJECTION PUMP OF THE DISTRIBUTOR TYPE WITH A MAGNETICALLY ACTUATED VALVE MEMBER OF A SWITCHING VALVE CONNECTED TO A LOW-PRESSURE PISTON
Nestor Rodriguez-Amaya, Stuttgart, Germany, assignor to Robert Bosch GmbH, Stuttgart, Germany
PCT No. PCT/DE94/00695, § 371 Date Mar. 15, 1996, § 102(e) Date Mar. 15, 1996, PCT Pub. No. WO95/02760, PCT Pub. Date Jan. 26, 1995
PCT Filed Jun. 18, 1994, Ser. No. 581,579
Claims priority, application Germany, Jul. 15, 1993, 43 23 683.9
Int. Cl.⁶ F04B *37/00;* **F02M** *41/00*
U.S. Cl. 417—462 **6 Claims**

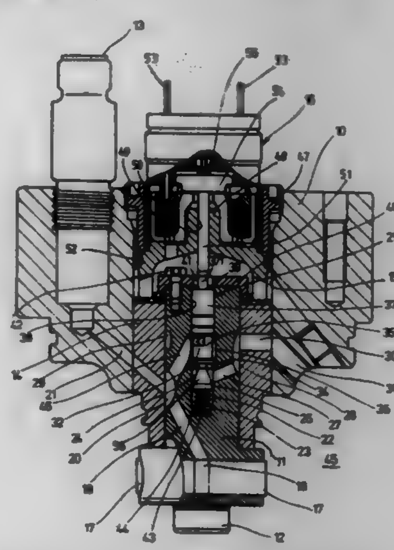

1. A fuel injection pump of the distributor type for supplying at least one injection nozzle of an internal combustion engine, comprising, at least one pump piston (17), driven in a reciprocating stroke motion, which defines a pump work chamber (18) that is connected to a fuel inlet and upon each pumping stroke, pumps fuel at injection pressure to one of the plurality of injection

nozzles; a rotating distributor shaft (11), which upon its rotation, via a distributor bore (19), establishes a communication between the pump work chamber (18) and the plurality of injection nozzles; and having a switching valve (25) for metering the fuel injection quantity, a valve member (35) which controls a valve opening (33), a valve seat (34) between a first valve chamber (36) that communicates with the distributor bore (19), and a second valve chamber (24) that communicates with a relief bore (27), said valve member lifted away from the valve seat (34) by means of a valve spring (44) acting in the valve opening direction and is displaced upon valve opening counter to the flow of fuel flowing out via the valve opening (33), further comprising an electromagnet (16) with a magnet armature (54) for actuating the valve member (35) in the valve closing direction, and a low-pressure piston (43) coaxial with the valve member (35) is rigidly connected to said valve member via a reduced-diameter tang (56), which protrudes into the second valve chamber (24) and is axially guided with minimal radial play, by its end remote from the valve opening (33), in a cylindrical wall segment (26) adjoining the second wall chamber (24), the valve spring (44) is received in a leakage fluid collecting chamber (23) connected to a fuel return line, which has a spring on its face end adjoining the low-pressure piston (43) following the cylindrical wall segment (26), where one end of the spring is braced against the bottom of the leakage fluid collecting chamber (23) and with another end against the face end of the low-pressure piston (43), and the two valve chambers (36, 24), the valve opening (33) with the valve seat (34), and the cylindrical wall segment (26), as well as the leakage fluid collecting chamber (23) together with the valve member (35) and the low-pressure piston are embodied in a central blind bore (22) in the distributor shaft (11), which blind bore is closed from an outside by the valve member, and the magnet armature (54) of the electromagnet (16) comes to act upon an outward-pointing face end of the valve member (35).

5,700,140
PUMP WITH IMPROVED BEARING ARRANGEMENT FOR AXIAL POSITION CONTROL
James Delwin Gray, Bethany; Michael Franklin Hughes, Oklahoma City, and Paul Joseph Lutes, Edmond, all of Okla., assignors to Corken, Inc., Oklahoma City, Okla.
Filed May 3, 1996, Ser. No. 642,678
Int. Cl.⁶ F04C *2/344;15/00*
U.S. Cl. 418—104 **23 Claims**

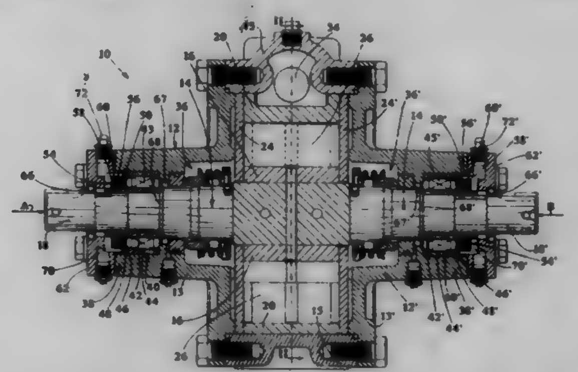

1. An improved pump of the type having a housing, a shaft rotationally disposed within the housing having first and second shaft ends, a pumping component secured between the first and second shaft ends, the improvement comprising:
first and second bearing caps, the bearing caps being secured to the housing; and
first and second bearing assemblies rotationally supporting the first and second shaft ends, respectively, each bearing assembly having:
a main radial bearing having an inner race integral or secured to the shaft;
a mounting ring around the shaft adjacently contacting the inner race;
a thrust bearing assembly having a rotatable inner thrust washer contacting the mounting ring, a static outer thrust washer supported by an associated one of the bearing caps in a fixed manner relative to said housing, and a thrust bearing disposed between the inner and outer thrust washers, each bearing cap retaining supporting the respective thrust bearing against outer race toward the respective mounting ring.

5,700,141
PILOT MODULE ASSEMBLY
Scott Miller, Butler; Don Brady; Steven Williamson, both of Wayne; Steven Luftig, Oakland, and Dominick Musto, Middlesex, all of N.J., assignors to Symtron Systems, Inc., Fair Lawn, N.J.
Filed Oct. 30, 1995, Ser. No. 549,955
Int. Cl.⁶ F23Q *2/32*
U.S. Cl. 431—125 **12 Claims**

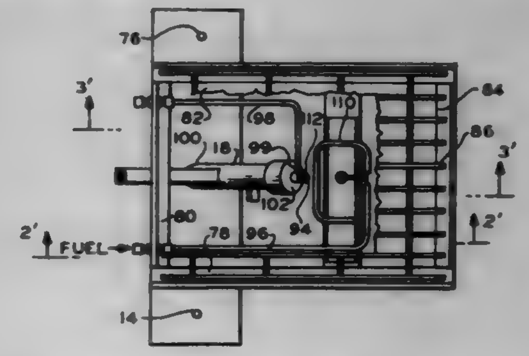

1. An igniter assembly for an aircraft fuel spill simulator comprising:
a reservoir to receive a volume of dispersion medium on the surface of which fuel burns;
an igniter unit located within the reservoir comprising
a closed end cylinder positioned at an angle of from about 15 to 80 degrees from the horizontal having a top end wall and a peripheral wall;
an igniter sparkplug without an air gap;
a hole located in the top end wall of the closed end cylinder for receiving the igniter sparkplug;
a fuel line having an orifice element with a plurality of outlet holes disposed near the igniter spark plug to allow a spray of fuel towards the igniter sparkplug; and
an air line having an outlet orifice disposed adjacent to the igniter sparkplug for allowing the blowing of air on the outlet orifice to keep extinguishment clear of the area of ignition and control the fuel-air mixture.

5,700,142
LIQUID PILOT ASSEMBLY
Scott Miller, Butler; Don Brady; Steven Williamson, both of Wayne; Steven Luftig, Oakland, and Dominick Musto, Middlesex, all of N.J., assignors to Symtron Systems, Inc., Fair Lawn, N.J.
Filed Jun. 6, 1996, Ser. No. 660,096
Int. Cl.⁶ F23Q *2/32*
U.S. Cl. 431—125 **9 Claims**

1. A liquid pilot assembly for use in a fuel pit for igniting combustible fuel in the pit comprising:
a housing forming a chamber for retaining a mixture of liquid fuel and water, the chamber containing an upper ignition zone for receiving a mixture of ambient air and fuel vapor produced from the liquid fuel;
an igniter unit means located in the chamber and adjacent to the ignition zone for providing as required electronically igniting of the fuel vapor in the ignition zone;

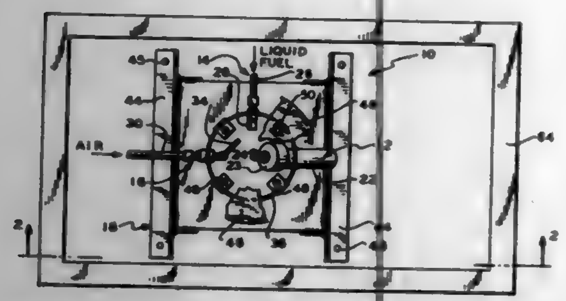

a fuel system means for supplying said liquid fuel to the chamber; and
a vaporization subassembly comprising an air distribution system for continuously supplying compressed air to prevent the ambient air and fuel vapor mixture from becoming too rich, assisting in the changing of liquid fuel to fuel vapor and for swirling the fuel vapor from the fuel in the ignition zone.

5,700,143
COMBINATION BURNER WITH PRIMARY AND SECONDARY FUEL INJECTION
Bruce C. Irwin, Palmyra; Edward E. Moore, Hummelstown, and Raymond F. Baum, Lebanon, all of Pa., assignors to Hauck Manufacturing Company, Lebanon, Pa.
Continuation-in-part of Ser. No. 188,406, Jan. 24, 1994, Pat. No. 5,511,970. This application May 12, 1995, Ser. No. 439,944
Int. Cl.^{6} F23D *17/00*
U.S. Cl. 431—284 **9 Claims**

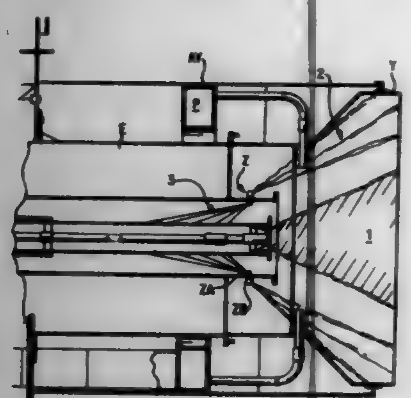

1. A combination burner, comprising
a primary air supply conduit having a central axis;
an atomizing nozzle operatively arranged inside the primary air supply conduit;
a secondary swirl air supply conduit arranged to permit secondary swirl air to exit past the atomizing nozzle and to shape a flame;
an annulus defined, in part, by the primary air supply conduit for selectively injecting primary gas into the secondary swirl air conduit when the burner is in a gas firing state;
a tertiary air supply conduit surrounding and partially defined by the secondary swirl air conduit for providing swirling tertiary air flow;
means for selectively supplying oil to the atomizing nozzle when the burner is in an oil firing state;
secondary gas supply nozzles for injecting secondary gas radially inwardly toward a centerline of the burner in the gas firing state to form a secondary gas flame stability zone;
injectors arranged selectively in relation to the secondary swirl air supply conduit to inject two streams of fuel, the first of the two streams converging toward the central axis of the primary air supply conduit as viewed in an upstream direction in the secondary swirl air conduit and the second of two streams diverging away from the central axis in a downstream direction in the secondary swirl air conduit with the burner in a firing state for firing the two streams of fuel;
and means for selectively swirling the second of the two streams.

5,700,144
METHOD AND APPARATUS FOR THERMAL TREATMENT OF SOLIDS
Friedrich Schleimer, Köln, and Dieter Ameis, Dormagen, both of Germany, assignors to Klockner-Humboldt-Deutz AG, Cologne, Germany
Filed Feb. 7, 1996, Ser. No. 598,032
Claims priority, application Germany, Feb. 8, 1995, 195 04 082.1
Int. Cl.^{6} F27B *3/18*
U.S. Cl. 432—161 **16 Claims**

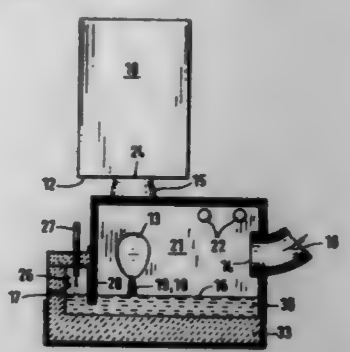

1. An apparatus for high-temperature treatment of fine-grained solids having a melting cyclone, and a separating chamber in which the reaction products obtained in the melting cyclone are introduced and separated from one another, comprising:
a separating chamber having a lateral admission opening;
a transfer element; and
a melting cyclone arranged such that the transfer element leads from an underside of the melting cyclone vertically obliquely downward in a curved path to the lateral admission opening of the separating chamber; and said separating chamber is fashioned cyclone-like forming a curved exhaust gas path and with a lower region for holding a molten bath of liquid reaction product, said lateral admission opening adapted for receiving the reaction products immediately above a surface of the molten bath contained within said lower region, and having an axial discharge opening for the exhaust gas, and a discharge opening for the liquid reactions product.

5,700,145
LINGUAL BRACKET WITH HINGED CAMMING CLOSURE AND RELEASABLE LOCK
Alexander J. Wildman, 2440 Willamette St., Eugene, Oreg. 97405
Continuation-in-part of Ser. No. 473,117, Jun. 5, 1995, Pat. No. 5,511,976. This application Feb. 16, 1996, Ser. No. 602,577
Int. Cl.^{6} A61C *7/00*
U.S. Cl. 433—10 **19 Claims**

1. An improved lingual orthodontic bracket comprising:
a bracket body having a three-sided archwire slot for receiving an archwire and a hinge formed on a side of the archwire slot; and
a closure member pivotally connected to the hinge to rotate through a rotational plane across the archwire slot;
the closure member including a first distal end connected pivotally by the hinge to the bracket body, a second distal end, and a central portion convexly shaped to extend across the archwire slot to retain the archwire seated in shear in the archwire slot;

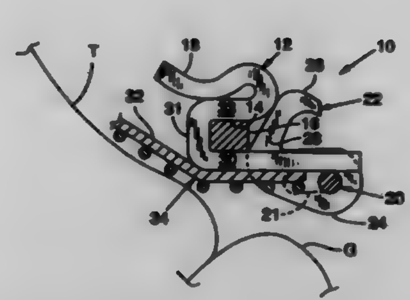

the bracket body including a closure member slot oriented in the rotational plane of the closure member to receive a retainer portion of the second distal end of the closure member when the closure member is in a closed position;
the closure member slot and the retainer portion being mutually arranged to interengage a side of the retainer portion with a side of the closure member slot.

5,700,146
DENTAL HYGIENE CLEANING TOOL
Smiljana Kucar, 222 Ocean Ave., Northport, N.Y. 11768
Filed Dec. 7, 1995, Ser. No. 568,535
Int. Cl.^{6} A61C *1/10;1/12;17/02*
U.S. Cl. 433—82 **28 Claims**

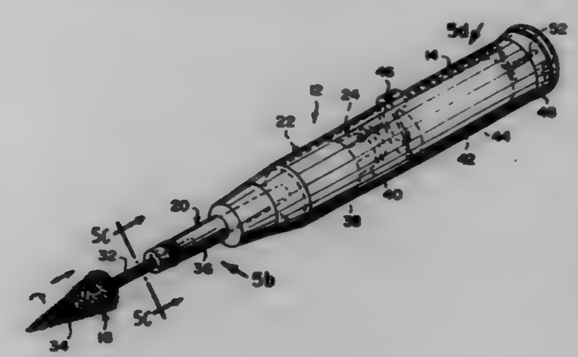

1. A dental hygiene cleaning tool comprising:
a) an elongated generally cylindrical housing to be grasped by a hand of a person;
b) a brush bit having a shank and a brush head;
c) means for coupling said brush bit to a first end of said housing, said coupling means being a chuck spindle extending longitudinally from said first end of said enlongated housing which will engage with a shank of said brush bit;
d) means within said housing, for rotating said brush bit;
e) means within said housing, for reciprocating said brush bit back and forth, so as to clean plaque build up on teeth and gums of a person, to remove bacteria which causes periodontal disease to the gums; and
f) means within said housing for applying a liquid antiseptic through said brush bit, for distribution onto the teeth and gums to help destroy bacteria which causes periodontal disease, said applying means including;
i) a compressible cartridge filled with the liquid antiseptic;
ii) a side access opening in said housing, with a longitudinal chamber therein, to receive said compressible cartridge;
iii) a hollow passageway through said chuck spindle;
iv) a hollow conduit in said shank of said brush bit;
v) release holes in said brush head of said brush bit;
vi) a puncture membrane on a forward end of said compressible cartridge;
vii) a puncture pin on a rearward end of said chuck spindle to puncture said puncture membrane, so that the liquid antiseptic can be released from said compressible cartridge; and
viii) means in said housing for forcing the liquid antiseptic out of said compressible cartridge, through said hollow passageway in said chuck spindle and past said hollow conduit in said shank and out said release holes at said brush head of said brush bit.

5,700,147
AIR CONTROLLED STERILE IRRIGATION SYSTEM (ACSIS)
Shannon E. Mills; Randy Shaffer; Michael T. Freeman; Thomas J. Plamondon, and Barry L. Oakes, Jr., all of San Antonio, Tex., assignors to The United States of America as represented by the Secretary of the Air Force, Washington, D.C.
Filed Jul. 6, 1995, Ser. No. 498,831
Int. Cl.^{6} A61C *1/02*
U.S. Cl. 433—98 **9 Claims**

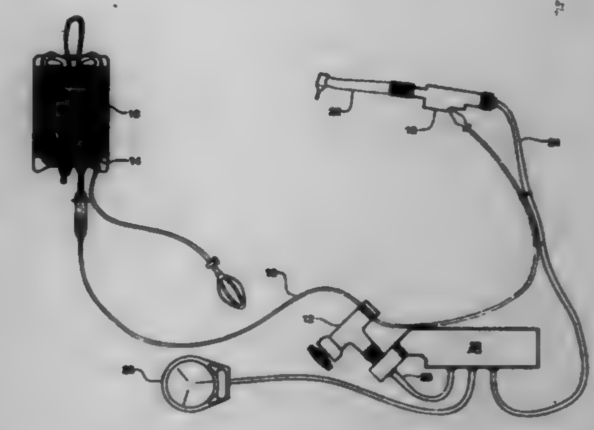

1. An air controlled sterile irrigation system for providing sterile irrigating solution for dental procedures, comprising:
(a) a sterilizable in-line adapter for connecting between an unmodified standard dental handpiece and a dental handpiece hose, the in-line adapter including an inlet port structurally adapted for receiving sterile irrigating solution from the dental handpiece hose and an outlet port structurally adapted for delivering sterile irrigating solution to the dental handpiece; and,
(b) an air operated pinch valve for controlling the flow of sterile irrigating solution through an irrigating solution hose connected between a source of sterile irrigating solution and the inlet port for the sterilizable in-line adapter.

5,700,148
SYRINGE-DELIVERABLE NEUTRALIZING BARRIER
Dan E. Fischer, Sandy, and Steven D. Jensen, Midvale, both of Utah, assignors to Ultradent Products? Inc., South Jordan, Utah
Filed Mar. 21, 1995, Ser. No. 408,812
Int. Cl.^{6} A61K *6/08*
U.S. Cl. 433—217.1 **32 Claims**

1. A caulking-type material for application to an acid etchable dental substrate to form a neutralizing barrier that confines an etching composition to a defined area on the dental substrate during an etching procedure, the caulking-type material comprising a mixture product of a matrix material and an acid neutralizing agent, the caulking-type material having a viscosity and rheology such that during the acid etching procedure the caulking-type material (a) will reliably adhere to the dental substrate where it is applied in a desired configuration of the neutralizing barrier, (b)

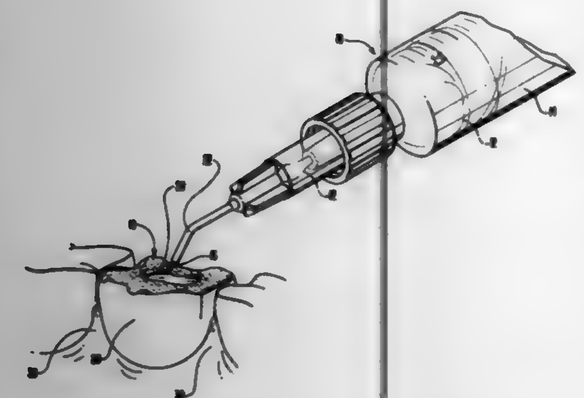

will substantially remain in the desired configuration, and (c) will prevent significant migration of the etching composition from the defined area.

5,700,149
METHOD OF PERSONAL VERIFICATION FOR AN IN-RESIDENT SYSTEM FOR ADMINISTRATING COURSE MATERIAL
Oscar R. Johnson, III, 3100 Jeanetta #1406, Houston, Tex. 77063, and Marschall S. Owens, 8607 Shadowcrest, Houston, Tex. 77074
Filed Jun. 3, 1994, Ser. No. 254,006
Int. Cl.[6] G09B 7/00
U.S. Cl. 434—322 16 Claims

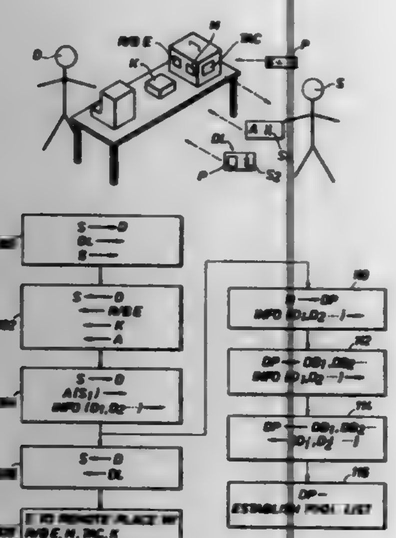

1. A method for personal validation of a remote student comprising:
soliciting a first datum of information from a student by an equipment distributor at a first place and time;
communicating with at least one database, created by a person/agency independent of the equipment distributor before the step of soliciting, to determine an independent preexisting correlation of the first datum with at least one second datum of information contained in database;
formulating a question based upon the second datum;
communicating the question to a student at a second place and time;
receiving an answer to the question in a data processor;
predicting, based upon the answer, whether the student at the second place and time is the student at the first place and time.

5,700,150
ELECTRICAL OUTLET TYPE EXTENSION CORD REEL WITH AUXILIARY OUTLET
Aurele Morin, 8635 Marjolaine St., Montreal Quebec, Canada, H1R 2H4
Filed Mar. 1, 1996, Ser. No. 609,616
Int. Cl.[6] H01R *13/72*
U.S. Cl. 439—4 10 Claims

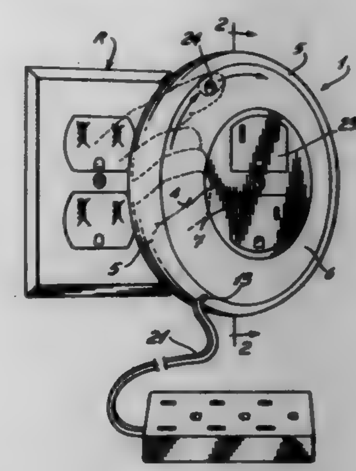

1. An electrical device for connection to an electrical wall outlet, comprising housing means having at least one set of electrical prongs extending rearwardly therefrom for insertion into the wall outlet for detachably mounting said electrical device to the wall outlet, one electrical socket being fixedly provided in a front surface of said housing means for each said set of electrical prongs and being electrically coupled to said electrical prongs, and an electrical extension cord electrically connected to said electrical prongs and displaceable between a retracted and an extended position relative to said housing means, said electrical socket being adapted for receiving the electrical prongs of another similar electrical device in a stacked relationship, whereby a desired number of additional extension cords can be added to the wall outlet by matingly connecting an appropriate number of said electrical devices.

5,700,151
ADJUSTABLE HEIGHT SEALED ELECTRICAL CONNECTOR
Iosif Korsunsky, Harrisburg; Dimitry Grabbe, Middletown, and Richard C. Schroepfer, Thompsontown, all of Pa., assignors to The Whitaker Corporation, Wilmington, Del.
Filed Jul. 14, 1995, Ser. No. 502,786
Int. Cl.[6] H01R *9/09*
U.S. Cl. 439—74 5 Claims

1. An electrical connector comprising a plug connector manufacturable in different heights to mate with a universal receptacle connector, so that parallel printed circuit boards can be interconnected by mating plug and receptacle connectors of similar construction differing only in the height of the plug connector, the plug connector comprising:
a plug connector housing having a mating section and a contact retention section, the plug housing having two side walls extending between the mating section and the contact retention section with a central web joining the two side walls, the central web forming the base of the mating section with the height of the side wall in the mating section being constant regardless of the height of the plug connector, the height of the side wall between the central web and the contact retention section changing for plug connectors having different heights, the contact retention section including retention members on the exterior of the side walls defining a plurality of contact retention windows; and

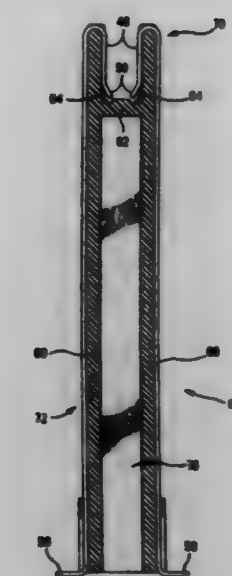

stamped and formed plug contacts comprising a mating contact section and a surface mount solder tail joined by a central section, the length of the central section being changed for plug contacts of different length with the size of the mating contact section remaining the same, the mating section including a portion secured to the inside housing wall in the housing mating section and with each contact extending through a corresponding contact retention window before being bent outwardly to form the surface mount solder tail.

5,700,152
ELECTRICAL TERMINAL APPARATUS
Leon P. Niedzwiecki, Romeo, Mich., assignor to TRW Vehicle Safety Systems Inc., Lyndhurst, Ohio
Filed Jul. 30, 1996, Ser. No. 688,302
Int. Cl.[6] H01R *9/09*
U.S. Cl. 439—78 13 Claims

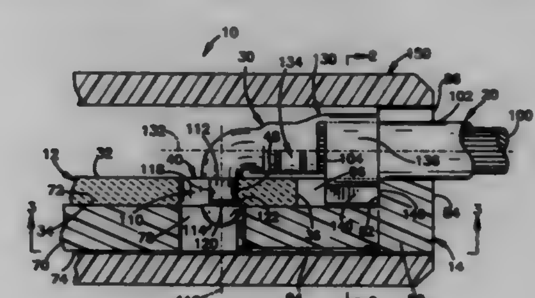

1. An apparatus comprising;
a circuit board having an opening;
an electrical conductor;
a conductor terminal on said electrical conductor for providing a mechanical connection and an electrical connection between said circuit board and said electrical conductor;
said conductor terminal having a connector section which is extensible through said opening in said circuit board, said conductor terminal having a first axis extending through said connector section and through said opening in said circuit board;
said conductor terminal having a body portion connected with said electrical conductor, said conductor terminal having a second axis extending through said body portion in a direction transverse to said first axis;
said connector section of said conductor terminal being movable in said opening, in a direction parallel to said second axis, from an insertion position to an attachment position in which said connector section is electrically connected with said circuit board;
said circuit board having a portion which overlies a surface on said connector section of said conductor terminal to block movement of said conductor terminal in a direction parallel to said first axis; and
said body portion of said conductor terminal including a strain relief member for blocking movement of said conductor terminal relative to said circuit board in a direction parallel to said second axis when said connector section is in the attachment position.

5,700,153
RELAY DEVICE FOR ROTATING MEMBERS
Akihisa Kawamura; Satoshi Ishikawa, and Hiroaki Ikuta, all of Shizuoka, Japan, assignors to Yazaki Corporation, Tokyo, Japan
Filed Jan. 3, 1996, Ser. No. 582,260
Claims priority, application Japan, Jan. 12, 1995, 7-003399
Int. Cl.[6] H01R *35/04*
U.S. Cl. 439—164 5 Claims

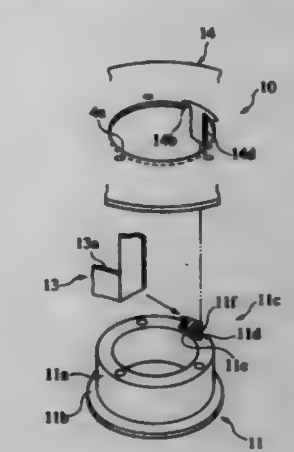

1. A relay device comprising:
a first rotor having an inner cylinder with an axial end;
a second rotor having an outer cylinder surrounding said inner cylinder at a distance to provide an annular space between the inner and outer cylinders, one of said first and second rotors being immovable while the other of said first and second rotors is rotatable within a predetermined rotational span;
a flexible flat cable accommodated in the annular space, said flexible flat cable being spirally wound and having one end portion carried by said inner cylinder and another end portion carried by said outer cylinder; and
a cover attachable to the axial end of said inner cylinder so that the one end of said flexible flat cable is drawn out of said annular space;
said inner cylinder having shroud part for retaining said one end portion of said flexible flat cable therein; and
skid cover having a press part engageable with said shroud part to force said one end portion of said flexible flat cable against said inner cylinder when said cover is attached to said inner cylinder.

5,700,154
MULTI-COMPONENT LAMP ADAPTOR ASSEMBLY
Brian P. Geary, Holland, Mich., assignor to Progressive Technology in Lighting, Inc., Holland, Mich.
Filed Nov. 14, 1995, Ser. No. 557,520
Int. Cl.[6] H01R *33/02*
U.S. Cl. 439—236 **18 Claims**

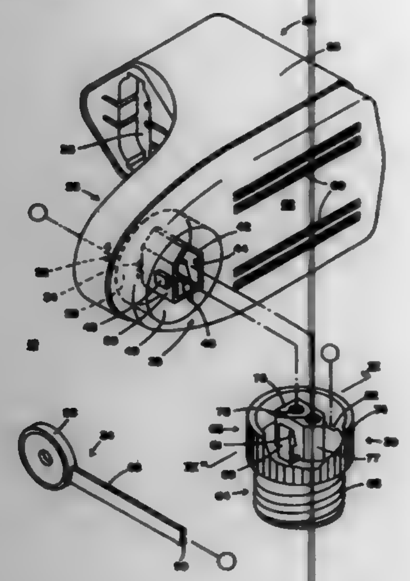

1. A lamp adaptor assembly for adapting an internally threaded electrical socket for use with a lamp, comprising:
a connecting assembly having a top, a base, and a first connector on said top electrically interconnected with said base, said base configured for inserting within and electrically engaging a threaded electrical socket; and
an adaptor having an irregularly shaped housing, a second connector for receiving a lamp, a third connector for engaging said first connector of said connecting assembly, and a ballast in said housing electrically interconnected with said second and third connectors, wherein said housing extends laterally irregularly from said third connector;
wherein said adaptor is rotationally movable with respect to said base when said adaptor is engaged with said connecting assembly, wherein said adaptor assembly can be mounted in locations too restricted for rotation of said irregularly shaped housing by engaging said connecting assembly with an internally threaded electrical socket, and engaging said second and third connectors and rotating said irregularly shaped housing to a desired orientation.

5,700,155
SOCKET FOR IC PACKAGE
Noriyuki Matsuoka, Yokohama, Japan, assignor to Yamaichi Electronics Co., Ltd., Tokyo, Japan
Filed Dec. 20, 1995, Ser. No. 580,055
Claims priority, application Japan, Dec. 21, 1994, 6-336151
Int. Cl.[6] H01R *11/22*
U.S. Cl. 439—266 **6 Claims**

1. A socket for an IC package, said socket comprising:
a socket body;
a plurality of contacts provided on said socket body for contacting leads of an IC package, said plurality of contacts being movable between a contacting position and a release position;
a contact shutter cover movably mounted on an upper surface of said socket body, said contact shutter cover being upwardly and downwardly movable relative to said socket body; and
a positioning means provided on said contact shutter cover and being disposed relative to said socket body such that, when an IC package is inserted in said socket body, said positioning

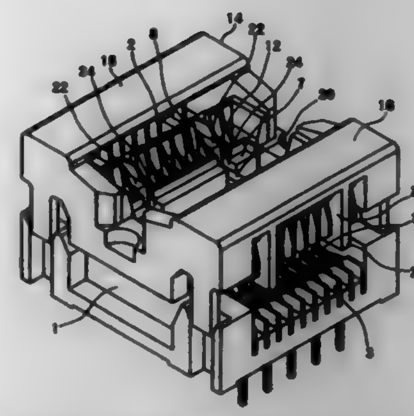

means can be located adjacent side surfaces of IC package leads on the IC package in order to restrict movement thereof,
wherein upon upward movement of said contact shutter cover, said contacts move into said contacting position to contact the leads of the IC package at a lead contact location and said positioning means is moved upwardly from a position below said lead contact location to a position adjacent the side surfaces of the IC package leads.

5,700,156
ELECTRICAL CONNECTOR WITH WIRE RESTRAINT
John Rudell Bussard, Kernersville, and Garold Michael Yurko, Greensboro, both of N.C., assignors to The Whitaker Corporation, Delaware, Del.
Filed Jul. 31, 1996, Ser. No. 690,684
Int. Cl.[6] H01R *13/58*
U.S. Cl. 439—471 **18 Claims**

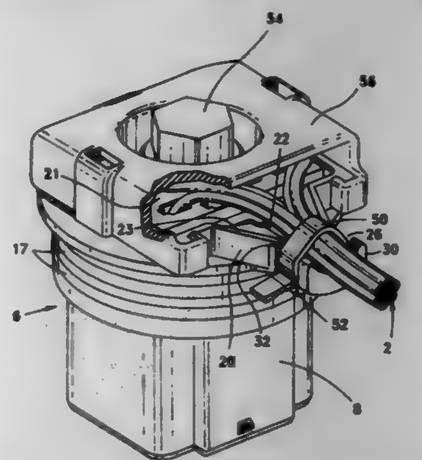

1. A wire restraint on an electrical connector for securing wires extending from the electrical connector, the wire restraint comprising:
an arm extending in a first direction from a connector body, the arm including a central section having a concave surface to engage the wires therein, the concave surface having at least one rib extending transverse to the first direction, the concave surface on the central section having a V-shape;
a first lip between the connector body and the central section, the first lip extending transversely beyond the central section, the first lip including a first surface merging with the concave surface on the central section; and
a second lip at an opposite end of the central section from the first lip, the second lip extending laterally beyond the central section so that a gap is formed between the first and second lips on at least one side of the central section, the second lip also including a second surface merging with the concave surface of the central section, whereby

wires extending from the connector can be positioned along the concave surface and along the first and second merging surfaces on the first and second lip and a wire tie encircling the central section and wires located on the concave surface is positioned in the gap between the first and second lips with each rib on the concave surface engaging wires positioned in contact therewith so that the ribs and the wire tie prevent movement of the wires relative to the connector when the portion of the wires extending beyond the wire restraint is vibrated or when an external force is applied to the wires.

5,700,157
ELECTRIC JACK WITH DISPLAY MEANS
Yu-Ping Chung, Hsinchu, Taiwan, assignor to D-Link Corporation, Hsinchu, Taiwan
Filed Jun. 5, 1996, Ser. No. 659,670
Int. Cl.[6] H01R *3/00*
U.S. Cl. 439—490 **3 Claims**

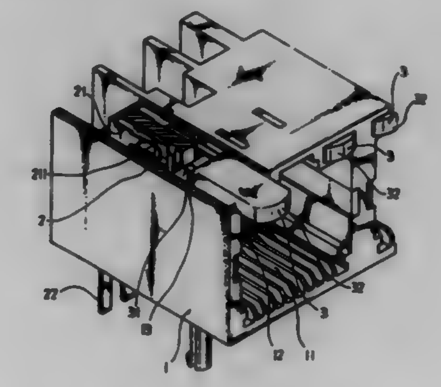

1. An electric jack for the connection of an electric connector, comprising at least one plug hole disposed on a side wall of the jack for the installation of display means, a plurality of terminals respectively disposed in said at least one plug hole at one end, each of said terminals having a receiving section, said receiving section having a clamp portion at one end facing the respective plug hole and a mounting tail end extending out of the jack and adapted for connection to a circuit board, and at least one display means respectively mounted in said at least one plug hole and detachably connected to said terminals, each of said at least one display means having a plurality of electrically conductive pins respectively plugged into the receiving section of the terminals in the respective plug hole.

5,700,158
CORD-REEL ASSEMBLY MOUNTED WITHIN A WALL
Gabe Neiser, 12 Gray Ave.; Theodore Simon, 35 Melrose Rd., both of Dix Hills, N.Y. 11746, and Barry Schweiger, 9 Richborne La., Melville, N.Y. 11747
Filed Mar. 6, 1996, Ser. No. 611,370
Int. Cl.[6] H01R *13/72*
U.S. Cl. 439—501 **10 Claims**

1. An apparatus for electrically coupling to a wall socket mounted within a wall and having an outlet comprising:
a cord-reel assembly adapted for mounting within the wall adjacent the wall socket and including a retractable extension cord with an accessible electrical socket on one end of said extension cord; and

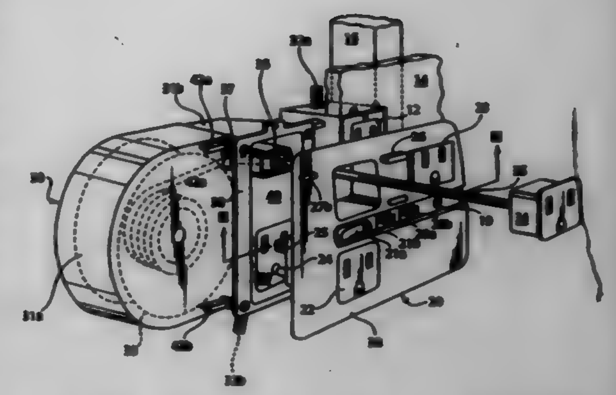

cover plate means adapted for jointly and at least partially covering said cord-reel assembly and the wall socket and adapted for electrically coupling said cord-reel assembly to the wall socket.

5,700,159
ELECTRICAL CONNECTION ELEMENT
Bernhard Albeck, Lorch-Waldhausen, Germany, assignor to Vossloh-Schwabe GmbH, Urbach, Germany
Filed Mar. 27, 1996, Ser. No. 624,800
Claims priority, application Germany, Mar. 30, 1995, 195 11 655.0
Int. Cl.[6] H01R *13/74*
U.S. Cl. 439—571 **20 Claims**

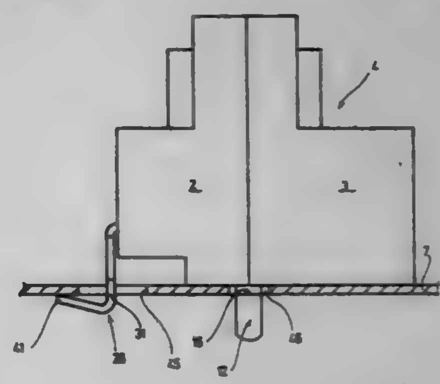

1. Electrical connection element (1) to provide an electrical connection between an electrically conductive element (28) and an electrically conductive plate-like support (7) formed with at least one aperture (45) therein, especially to provide a connection for a protective, optionally grounding conductor,
said connection element comprising
a housing (4) of insulating material formed with an essentially flat engagement surface (9), adapted to be placed against the plate-like support (7);
at least one attachment means (12) carried by said housing and for attaching said housing to said support (7);
at least one contact element (5) located within said housing (4) for connection to at least one electrical line; and
a metallic strip (28) electrically connected to said contact element (5) within the housing (5), said metallic strip (28) being formed with a bend or crease line (34) separating said strip into a neck portion (31) extending from said housing (4) and a hook portion (36) angled off from said neck portion (31) at an angle with respect to said neck portion in a direction essentially parallel to, or acutely angled with respect to said essentially flat engagement surface (9),
wherein said neck portion (31) and said hook portion (36) of said metallic strip (28), together with said insulated housing (4), form a lever (48) in which the hook portion, upon insertion thereof through said aperture (45), passes beneath,

becomes located under the plate-like, conductive support (7), engages thereagainst at least with an end of the hook portion and is supported by said plate-like support (7), to permit at least part of the neck portion (31) to be passed, by lever action, through said aperture (45).

5,700,160
ELECTRICAL CONNECTOR FOR INTERCONNECTING FEMALE AND MALE CONTACTS OF CABLES
Chun-Te Lee, Taichung City, Taiwan, assignor to Super Group Co., Ltd., Taichung City, Taiwan
Filed Nov. 19, 1996, Ser. No. 752,557
Int. Cl.⁶ H01R *9/05;17/04*
U.S. Cl. 439—578 **5 Claims**

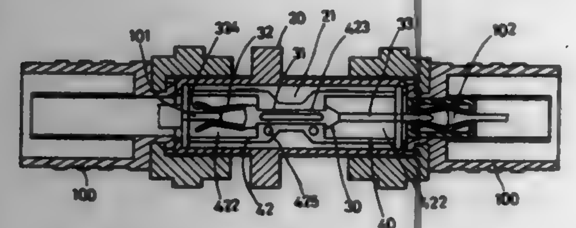

1. A coaxial electrical connector, comprising:
a generally cylindrical conductive housing;
a conductive cable-engaging member having an elongated intermediate section with two ends, two engaging units extending lengthwise from said ends of said intermediate section, and two first shoulder portions, each of said first shoulder portions being formed adjacent to a respective one of said ends of said intermediate section; and
a hollow, elongated insulating member fitted in said conductive housing and having two closed ends, two receiving spaces for receiving said engaging units of said cable-engaging member, and a restricted space interconnecting said receiving spaces for receiving said intermediate section of said cable-engaging member, each of said closed ends of said insulating member having a through-hole formed therein, each of said receiving spaces being adjacent to and communicating with a respective one of said through-holes, said restricted space and each of said receiving spaces having a second shoulder portion formed therebetween for engaging a respective one of said first shoulder portions of said cable-engaging member in order to prevent said cable-engaging member from moving lengthwise relative to said insulating member.

5,700,161
TWO-PIECE LEAD SEAL POTHEAD CONNECTOR
Leonard M. Plummer; Bertolo L. Leyva, both of Midland, Tex., and Richard T. Rentzel, Broken Arrow, Okla., assignors to Baker Hughes Incorporated, Houston, Tex.
Filed Oct. 13, 1995, Ser. No. 542,585
Int. Cl.⁶ H01R *13/40*
U.S. Cl. 439—587 **19 Claims**

1. In an electric submersible pump assembly of the type having a downhole pump section, an electric pump motor and a pothead connector for connecting a downhole cable to the electric pump motor, wherein the pothead connector has a tubular housing and fasteners for securing the tubular housing to the electric pump motor, the tubular housing including an inner end into which the downhole cable extends and an outer end through which electrical conductors of the downhole cable are electrically connected to the electric pump motor, and wherein the downhole cable has insulation layers disposed around each of the electrical conductors and protective lead sheaths extending around the insulation layers to separately encase the electrical conductors, the improvement comprising:

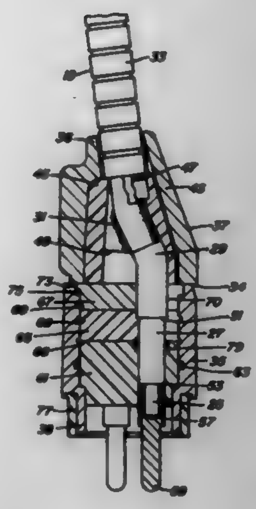

an insulator disk disposed within the tubular housing at the outer end, separating the electrical conductors in alignment for electrically connecting to the electric pump motor;
a lead based alloy solder layer disposed within the tubular housing intermediately between the inner and outer ends, wetted against an interior perimeter of the tubular housing and against the protective lead sheaths to seal therebetween; and
an epoxy layer disposed within the tubular housing between the solder layer and the insulator disk and extending from the insulation layers to the interior perimeter of the tubular body.

5,700,162
CONNECTOR
Yuji Hatagishi; Toshihiko Yamamoto; Kimihiro Abe, and Toshiaki Okabe, all of Shizuoka-ken, Japan, assignors to Yazaki Corporation, Tokyo, Japan
Filed Jun. 5, 1996, Ser. No. 658,413
Claims priority, application Japan, Jun. 6, 1995, 7-139275
Int. Cl.⁶ H01R *13/40*
U.S. Cl. 439—595 **4 Claims**

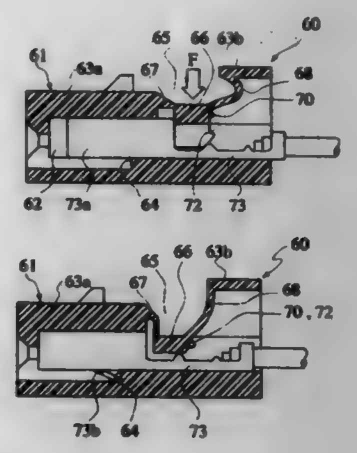

1. A connector comprising:
an opening formed in an outer peripheral wall of a connector housing facing a terminal storage chamber;
a rear holder arranged in said opening and inserted into said terminal storage chamber to be engaged with an engagement portion of a terminal inserted into said terminal storage chamber from a rear thereof so as to prevent removal of said terminal to the rear; and
front and rear bands for connecting front and rear edges of said rear holder to front and rear edges of said opening,

wherein a curved spring portion for pivotally holding said rear holder on a front end of said front band while keeping a posture of said rear holder constant is formed on said rear band.

5,700,163
PRESS-CONNECTING CONNECTOR WITH INTEGRAL COVER
Toshiaki Okabe, Shizuoka, Japan, assignor to Yazaki Corporation, Tokyo, Japan
Filed May 9, 1996, Ser. No. 647,042
Claims priority, application Japan, May 12, 1995, 7-114747
Int. Cl.⁶ H01R *13/40*
U.S. Cl. 439—596 **6 Claims**

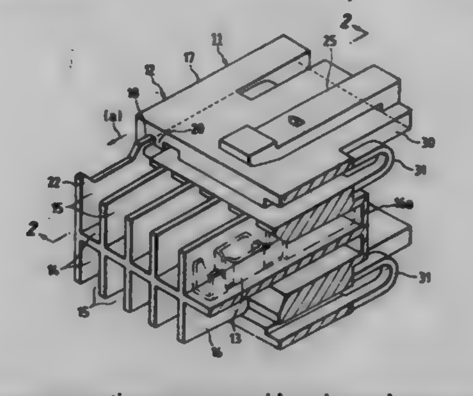

1. A press-connecting connector with an integral cover comprising:
a housing body which has a predetermined number of terminal receiving chambers for respectively receiving press-connecting terminals, said terminal receiving chambers having open sides directed towards an outer periphery of said housing body; and
a housing cover fitted on the outer periphery of said housing body to cover the open sides of said terminal receiving chambers,
wherein said housing body and said housing cover are molded integrally with each other through connecting piece portions which are cut off when said housing cover is to be completely fitted on said housing body, and elastic bands are integrally connected to said housing body and said housing cover, and are disposed in respective spaces provided between a front end portion of said housing body and said housing cover.

5,700,164
ELECTRICAL CONNECTOR WITH SHIELD
Charles Harry Weidler, Lancaster; Michael David Long, and Hurley Chester Moll, Jr., both of Harrisburg, all of Pa., assignors to The Whitaker Corporation, Wilmington, Del.
Filed Apr. 10, 1996, Ser. No. 629,485
Int. Cl.⁶ H01R *13/00*
U.S. Cl. 439—607 **4 Claims**

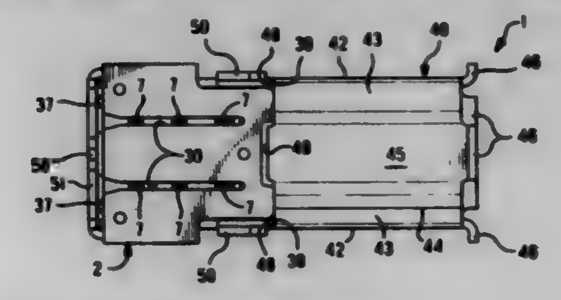

1. An electrical connector comprising:
conductive electrical contacts within an insulating housing, and a conductive shield encircling the housing,
the shield having a rear wall movable into position opposite a rear face of the housing and spaced a small distance therefrom upon being affixed to side walls of the shield, the housing rear face including at least one projecting housing portion of the same material as the housing, at least one said projecting housing portion being impinged compressively against a forwardly facing major surface of said rear wall on the shield, at least one said projecting housing portion dimensioned to slightly exceed said small distance between the rear shield wall and the housing rear face and adapted to be compressively deflected, and
said at least one projecting housing portion upon engagement by said rear wall biasing the housing forwardly until forwardly facing surfaces of the housing abut against rearwardly facing surfaces of the shield to position a mating front end of the housing at a desired immobile position relative to a mating end of the shield, whereafter said rear shield wall becomes affixed in position and at least one said projecting housing portion is and remains compressively deflected by said rear wall major surface.

5,700,165
FUSED HIGH AMPACITY ELECTRICAL QUICK DISCONNECT
Brent Alan Harris, Alexandria; Shawn Daren Drew, and Arnold Carl Rybolt, both of Anderson, all of Ind., assignors to General Motors Corporation, Detroit, Mich.
Filed Dec. 11, 1995, Ser. No. 570,385
Int. Cl.⁶ H01R *33/95*
U.S. Cl. 439—621 **20 Claims**

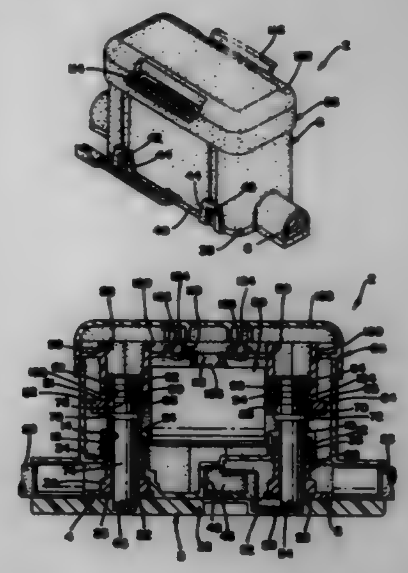

1. A high voltage, high ampacity, fused quick disconnect for alternately connecting and disconnecting an electrical power supply to/from an electrical load comprising:
an input terminal receiving electrical current from said supply, said terminal having a first electrically conductive sleeve defining a first opening adapted to snugly receive a first electrically conductive rod;
an output terminal receiving electrical current from said input terminal for delivering said current to said load, said output terminal having a second electrically conductive sleeve defining a second opening adapted to snugly receive a second electrically conductive rod;
an insulated housing holding said terminals side-by-side and apart from each other;
a cover for said housing;

a first electrically conductive rod secured to said cover and conforming substantially to said first opening for engaging and disengaging said first sleeve;

a second electrically conductive rod secured to said cover and conforming substantially to said second opening for engaging and disengaging said second sleeve; and

a replaceable, current sensitive fuse having a first terminus detachably secured to said first rod in said cover, and a second terminus detachably secured to said second rod in said cover to conduct electrical current between said rods under normal current load conditions, and to fail open under overload current conditions;

whereby placement of said cover on said housing electrically couples said terminals together and removal of said cover electrically disconnects said terminals one from the other when said fuse is intact, and permits ready replacement of said fuse off-line from said power supply when said fuse has failed.

5,700,166

Patent Not Issued For This Number

5,700,167

CONNECTOR CROSS-TALK COMPENSATION

Julian Robert Pharney, and William Tracy Spitz, both of Indianapolis, Ind., assignors to Lucent Technologies, Murray Hill, N.J.

Filed Sep. 6, 1996, Ser. No. 711,699

Int. Cl.⁶ H01R *23/02*

U.S. Cl. 439—676 **16 Claims**

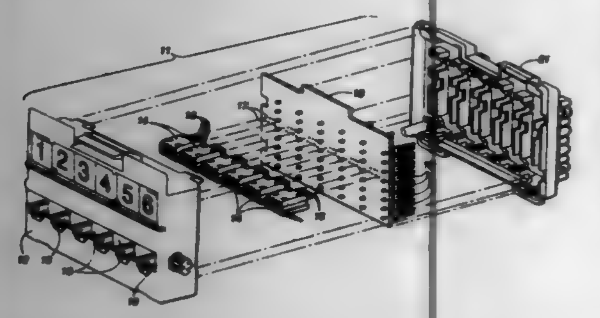

1. For use in a connector arrangement in a communication system, a cross-talk compensaring member comprising:

a planar substrate (18) having first and second surfaces (41,42);

connector members (1–8) on said substrate for conductively receiving the first and second leads of at least two conductor pairs;

said substrate having conductive paths thereon connecring each of the connector members to output members (47, 49, 53, 56, 59, 63, 67, 68) wherein the conductive paths (51, 54) connected to the first (4) and second (5) connector members of a first conductor pair (R_1, T_1) and the conductive paths (57, 61) connected to the first (6) and second (3) connector members of a second conductor pair (R_3, T_3) form first and second facing planar inductive loop portions, said first and second loop portions lying in planes parallel to and facing each other, said planes being normal to the plane of said substrate, and adapted to interact with each other to induce compensaring cross-talk between said first and second conductor pairs.

5,700,168

ELECTRONIC IGNITION INTERRUPTION APPARATUS

Martin J. Mondek, Wonder Lake, and James C. Kantola, Waukegan, both of Ill., assignors to Outboard Marine Corporation, Waukegan, Ill.

Filed Aug. 19, 1996, Ser. No. 697,061

Int. Cl.⁶ B63H 23/08

U.S. Cl. 440—1 **6 Claims**

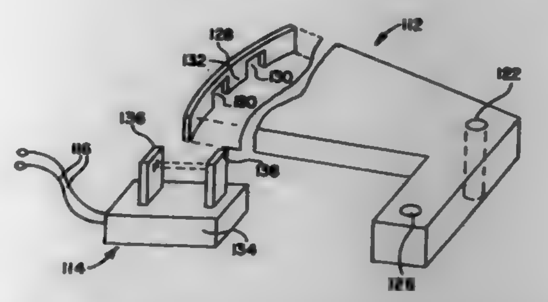

1. In a marine propulsion device including an internal combustion engine, a propulsion unit, a propeller shaft rotatably mounted in said propulsion unit and carrying a propeller, a drive shaft rotatably mounted in said propulsion unit and driven by said internal combustion engine, a transmission drivingly connecting said drive shaft with said propeller shaft and movable between forward drive, reverse drive and neutral positions, shift means including a rotatable member operably connected to said transmission for moving said transmission between the forward drive, reverse drive and neutral positions in response to rotation of said member, said shift means further including a shift lever mounted on said rotatable member for rotation in common therewith, and shift assistance means including an element adapted for movement by an operator to effect shifting and carried by said shift lever for common movement therewith and for translatory movement relative to said shift lever when shift resistance to movement of said transmission from either the forward drive position or the reverse drive position to the neutral position is greater than a predetermined level, the improvement comprising interruption means for interrupting engine ignition in response to movement of said element relative to said shift lever, said interruption means including an encoder and a detector, said encoder being movably mounted on said shift lever and connected to said element for movement in response to translatory movement of said element relative to the shift lever, said detector being mounted on said shift lever and adapted to generate a signal in response to movement of said encoder for interrupting engine ignition.

5,700,169

INLET ADAPTER FOR A PERSONAL WATERCRAFT

James R. Jones, Neosho, Wis., assignor to Brunswick Corporation, Lake Forest, Ill.

Filed Sep. 23, 1996, Ser. No. 717,915

Int. Cl.⁶ B63H *11/01*

U.S. Cl. 440—46 **7 Claims**

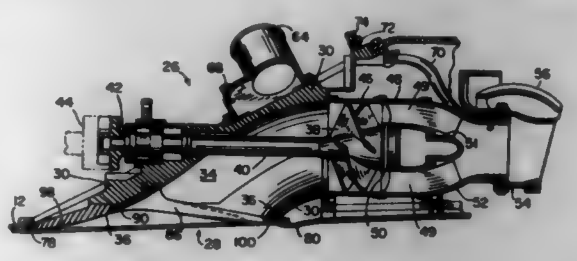

1. In a jet propelled watercraft having a pump and an impeller, an inlet opening through the underside of the watercraft that allows seawater to flow to the pump, and a rudder outlet that allows sea

water to flow from the after the impeller has provided energy to the flow of sea water through the pump, an inlet adapter system comprising:

an inlet adapter base attached to the underside of the watercraft;

a plurality of tines extending longitudinally from the inlet adapter base and covering the inlet opening, each tine having a face that is exposed to the flow of sea water flowing into the inlet opening and a pair of converging side surfaces extending generally upward from the tine face, wherein each exposed face is rounded near upstream edge of the inlet opening and is flat near a downstream edge of the inlet opening.

5,700,170

VARIABLE DIAMETER JET PROPULSION UNIT

Robert F. Mataya, 614 Coles Loop, Post Falls, Id. 83854

Filed Dec. 8, 1995, Ser. No. 568,150

Int. Cl.⁶ B63H *11/103*

U.S. Cl. 440—47 **19 Claims**

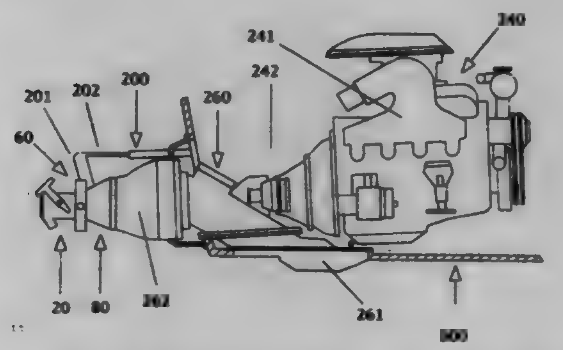

1. A variable diameter jet propulsion unit for a marine craft, comprising:

(a) a nozzle housing, defining an annular bladder recess;

(b) at least three nozzle cone plates, pivotally mounted within the nozzle housing;

(c) an annular bladder, carried by the bladder recess and in contact with the nozzle cone plates; and

(d) a source of hydraulic power, attached to the annular bladder.

5,700,171

SPEED CONTROL SYSTEM

Eric P. Horton, Fall River, Canada, assignor to Perfect Pass Control Systems Incorporation, Dartmouth, Canada

Filed Oct. 27, 1995, Ser. No. 549,283

Int. Cl.⁶ B60K *41/00*

U.S. Cl. 440—87 **14 Claims**

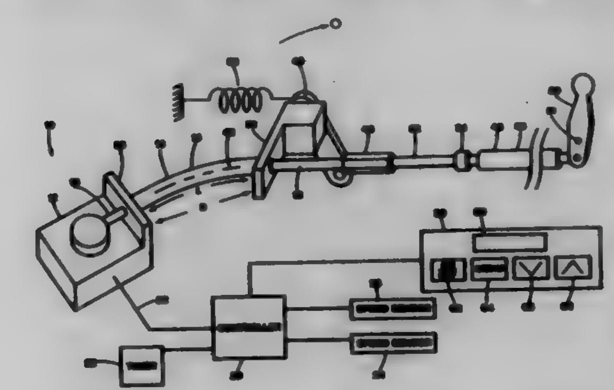

1. Apparatus for use in a vehicle speed controller, comprising:

an actuator;

a co-axial cable having an outer sheath for extending between a buttress and an engine throttle lever and an inner cable operatively associated with said actuator and extending through said sheath to a support positioned beyond said engine throttle lever; said outer sheath being relatively incompressible along its longitudinal axis and relatively flexible transversely of its longitudinal axis, said sheath having a length greater than the distance between said buttress and said engine throttle lever, at least when said engine throttle lever is in a closed throttle position; and

a controller for receiving an input by a speed sensor and outputting a control signal to said actuator.

5,700,172

SUBMERGED MARINE EXHAUST SYSTEM

Frank Benson Ousley, II, Cocoa, and Douglas Allen Kocha, Jr., Merritt Island, both of Fla., assignors to Ray Industries, Inc., Knoxville, Tenn.

Continuation-in-part of Ser. No. 374,228, Jan. 18, 1996, Pat. No. 5,505,644. This application Apr. 8, 1996, Ser. No. 629,212

Int. Cl.⁶ B63H *21/32*

U.S. Cl. 440—88 **7 Claims**

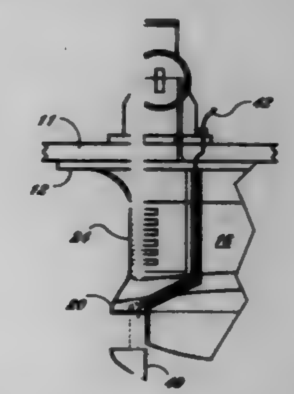

1. A submerged exhaust device for use with a marine engine mounted in a vessel, said vessel having a hull with an undersurface that is submerged when said vessel is placed within a body of water, said exhaust device comprising:

a submerged hydrodynamic exhaust outlet means fixed to said hull undersurface;

said hydrodynamic exhaust outlet means defining an exhaust chamber and including a downwardly extending streamlined first section having a low coefficient of drag for minimizing turbulent wake, said first section terminating in a second section having a higher coefficient of drag for generating a submerged layer of turbulent wake separated from the bottom of the hull by a region of substantially less turbulence created by said first section, said second section incorporating a submerged exhaust outlet, for discharging exhaust in said submerged turbulent layer such that said exhaust remains submerged until said vessel has cleared the vicinity;

said submerged hydrodynamic exhaust outlet means defining at least one auxiliary internal chamber.

5,700,173

SWIMMING INSTRUCTIONAL DEVICE

Sam M. Lerro, 8 Fountain of Youth Blvd., St. Augustine, Fla. 32084

Filed Feb. 1, 1996, Ser. No. 595,177

Int. Cl.⁶ A63B *31/02*

U.S. Cl. 441—57 **20 Claims**

1. A swimming instructional and training device worn on an individual body joint chosen from the group of body joints consisting of the knee joint, the ankle/foot joint, the elbow joint and the wrist/hand joint, said device comprising in combination flotation means and positioning means, said positioning means restrictively positioning the body joint in the angular alignment equal to

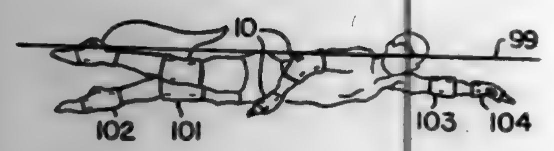

the technically correct angular alignment for proper execution of a standard swimming stroke in the absence of said device, said floatation means simultaneously lifting said body joint to the water surface to properly position the body joint in the water, and where said positioning means is flexible to the extent that the body joint can be flexed.

5,700,174
KNEEBOARD
Robert Lee Churchill, Redlands, and Douglas Geller, Arcadia, both of Calif., assignors to Swimways Corporation, Virginia Beach, Va.
Filed Sep. 19, 1996, Ser. No. 710,583
Int. Cl.[6] B63B *35/81*
U.S. Cl. 441—65 **9 Claims**

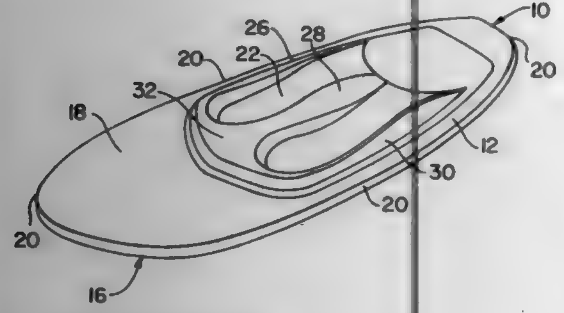

1. A kneeboard comprising:
(a) a core having a dorsal and a ventral surface; and
(b) a shell surrounding the core, said shell comprising:
i. a hull adjoining the ventral surface of the core, said hull having a ventral surface;
ii. a deck adjoining the dorsal surface of the core; said deck comprising a passenger contact area; the passenger contact area having a first lateral side, a middle lateral area, a second lateral side, a front transverse portion, and a most dorsal portion; the passenger contact area comprising means for strengthening integrated into the passenger contact area, said strengthening means forming a plurality of contours in the passenger contact area; and
iii. a lip connecting the hull to the deck, said lip having a dorsal surface and a ventral surface; wherein the thickness between the dorsal surface of the lip and the ventral surface of the lip is less than the average thickness of the shell measured between the dorsal portion of the passenger contact area and the ventral surface of the hull.

5,700,175
FIELD EMISSION DEVICE WITH AUTO-ACTIVATION FEATURE
Wen Chun Wang, and Tzung-Zu Yang, both of Hsinchu, Taiwan, assignors to Industrial Technology Research Institute, Hsinchu, Taiwan
Filed Apr. 8, 1996, Ser. No. 629,157
Int. Cl.[6] H01J *1/30;9/18*
U.S. Cl. 445—24 **5 Claims**

1. A method for manufacturing a cold cathode array comprising:
(a) providing an insulating first substrate having an upper surface;

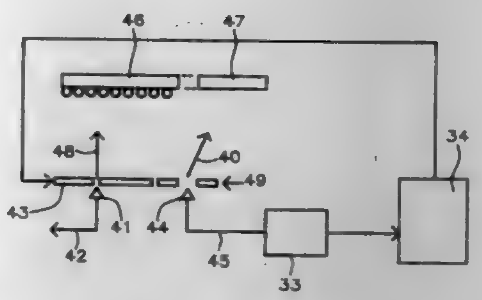

(b) forming a main array of field emission devices on part of said upper surface and providing gate lines;
(c) forming an additional group of field emission devices on part said upper surface, separated from said main array;
(d) positioning a conductive phosphor screen a short distance directly above said main array;
(e) positioning a transparent anode above said additional group;
(f) providing first circuitry for driving said main array, including means for applying a variable voltage to the gate lines;
(g) providing second circuitry for detecting emission current in said additional group of field emission devices; and
(h) connecting said second circuitry to said means for applying variable voltage, thereby causing the gate voltage to vary in inverse proportion to the emission current of said group of field emission devices.

5,700,176
METHOD OF GETTERING AND SEALING AN EVACUATED CHAMBER OF A SUBSTRATE
Michael D. Potter, Grand Isle, Vt., assignor to Advanced Vision Technologies, Inc., Rochester, N.Y.
Division of Ser. No. 459,033, Jun. 2, 1995, Pat. No. 5,618,216. This application Oct. 22, 1996, Ser. No. 735,042
Int. Cl.[6] H01J *9/40*
U.S. Cl. 445—25 **29 Claims**

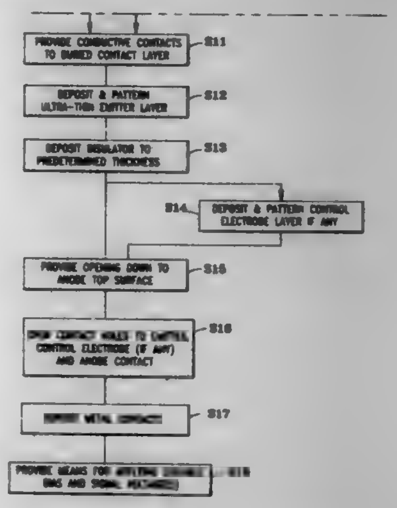

1. A process for forming an evacuated chamber in a substrate having an upper surface, comprising the steps of:
(a) providing a first opening in said upper surface of the substrate, said opening having a first predetermined depth and a predetermined volume, to form a main cavity;
(b) providing a second opening, communicating with said first opening provided in step (a), said second opening having a second predetermined depth;
(c) temporarily filling both said first and second openings with a sacrificial first material;
(d) planarizing said sacrificial first material to form a planar surface;

(e) disposing a second material over said upper surface of the substrate and said planar surface to form a chamber ceiling;
(f) providing a third opening in said chamber ceiling only over said second opening;
(g) removing said sacrificial first material from beneath said chamber ceiling through said third opening to form a chamber;
(h) removing any atmosphere surrounding and within said chamber formed in step (g) to evacuate said chamber;
(i) introducing a gettering material into said third opening; and
(j) then immediately introducing a third material into said second and third openings, while plugging said third opening and while sealing said third material to said second material, thereby enclosing said evacuated chamber.

5,700,177
STACKED COMPONENTS ASSEMBLY TOY
Jerome H. Lemelson, Suite 286, Unit 802, 930 Tahoe Blvd., Incline Village, Nev. 89451
Filed Aug. 7, 1996, Ser. No. 689,228
Int. Cl.[6] A63H *03/16*
U.S. Cl. 446—117 **20 Claims**

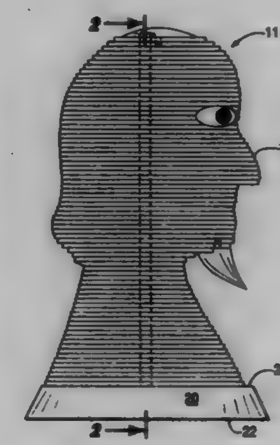

1. An assembly toy comprising:
a plurality of planar members having opposite faces and a circumscribing edge, each member having at least one aperture passing therethrough;
an axial structure attached to a base and extending vertically therefrom, said axial structure being shaped to pass through the apertures of said planar members as said members are stacked upon said base in face-wise abutment to align the apertures and thereby constrain the orientation of said members;
wherein said planar members are individually shaped such that when said members are stacked upon one another; in a particular order and fixed in position and orientation by said axial structure, the circumscribing edges of the successive stacked members define a predetermined composite three-dimensional object; and
further wherein two or more of said planar members have one or more notches in the circumscribing edges thereof so that said two or more planar members may be stacked and oriented to align said notches to thereby define a slot for frictionally retaining protrusions of ornamental articles to be mounted on the composite three-dimensional object.

5,700,178
EMOTIONAL EXPRESSION CHARACTER
Christopher D. Cimerman, Depew, and Jennifer M. Long, East Aurora, both of N.Y., assignors to Fisher-Price, Inc., East Aurora, N.Y.
Filed Aug. 14, 1996, Ser. No. 696,639
Int. Cl.[6] A63H *3/20;3/33*
U.S. Cl. 446—301 **14 Claims**

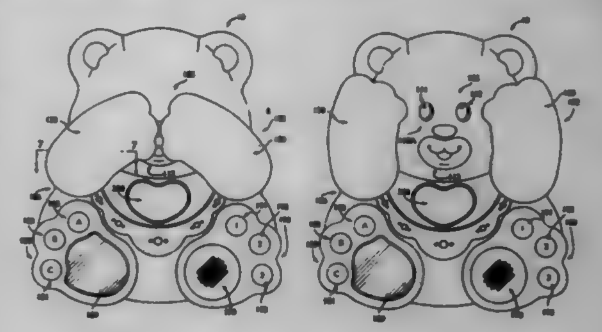

1. A toy comprising:
a housing having a viewing window formed therein;
an indicia-bearing member disposed within said housing and bearing a first visual indicium expressive of a first emotional state and a second visual indicium expressive of a second emotional state, said indicia bearing member being mounted for movement between a first position in which said first visual indicium is visible from outside said housing via said viewing window and a second position in which said second visual indicium is visible from outside said housing via said viewing window;
means for generating a first audible output expressive of said first emotional state when said indicia bearing member is in said first position and a second audible output expressive of said second emotional state when said indicia bearing member is in said second position.

5,700,179
METHOD OF MANUFACTURING SEMICONDUCTOR WAFERS AND PROCESS OF AND APPARATUS FOR GRINDING USED FOR THE SAME METHOD OF MANUFACTURE
Fumihiko Hasegawa; Makoto Kobayashi, both of Nishishirakawa-gun, and Tameyoshi Hirano, Hiroshima, all of Japan, assignors to Shin-Etsu Handotai Co., Ltd., Tokyo, Japan
Filed Jul. 29, 1996, Ser. No. 688,173
Claims priority, application Japan, Jul. 28, 1996, 7-212508
Int. Cl.[6] B24B *1/00*
U.S. Cl. 451—41 **20 Claims**

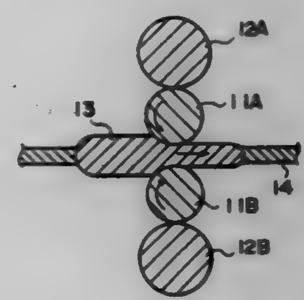

1. A method of processing a semiconductor wafer comprising the steps of:
flattening a thin, disc-like, sliced wafer by simultaneously grinding both sides of the wafer by passing the wafer between paired cylindrical grinding rolls supported at both ends in bearings, and

thereafter polishing the flattened wafer on at least one side to obtain a polished wafer.

5,700,180
SYSTEM FOR REAL-TIME CONTROL OF SEMICONDUCTOR WAFER POLISHING
Gurtej S. Sandhu, and Trung Tri Doan, both of Boise, Id., assignors to Micron Technology, Inc., Boise, Id.
Continuation-in-part of Ser. No. 112,759, Aug. 25, 1993, Pat. No. 5,486,129. This application Oct. 24, 1995, Ser. No. 547,529
Int. Cl.⁶ B24B *17/00*
U.S. Cl. 451—5 **21 Claims**

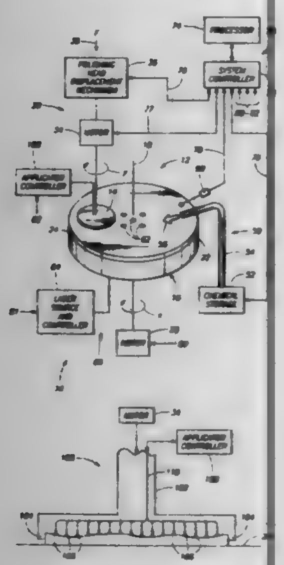

1. A system for polishing a semiconductor wafer, the system comprising:
a wafer polishing assembly for polishing a face of a semiconductor wafer at a polishing rate and a polishing uniformity, the wafer polishing assembly including a platen subassembly defining a polishing area, and a polishing head configured to support a semiconductor wafer relative to the platen subassembly under an adjustable polishing force to polish the wafer face;
a controller selectively adjusting the polishing force during polishing of the wafer; and
a plurality of pressure applicators supported by the polishing head and disposed to alter the contour of the wafer, the pressure applicators being individually controllable to move between retracted positions and extended positions to alter the contour of the wafer.

5,700,181
ABRASIVE-LIQUID POLISHING AND COMPENSATING NOZZLE
Mohamed Ahmed Hashish, Bellevue, Wash.; David Arthur Crowe, Webster, and Neil Dean Armstrong, Greece, both of N.Y., assignors to Eastman Kodak Company, Rochester, N.Y.
Continuation of Ser. No. 126,296, Sep. 24, 1993, abandoned. This application Jan. 2, 1996, Ser. No. 581,880
Int. Cl.⁶ B24B *1/00;* **B24C** *1/00*
U.S. Cl. 451—40 **11 Claims**

1. A method of polishing a glass surface; comprising the steps of:
delivering a high-pressure abrasive fluid through a nozzle exit to the glass surface; and
maintaining the nozzle exit in sufficiently close proximity to the glass surface to constrain and accelerate the fluid between the

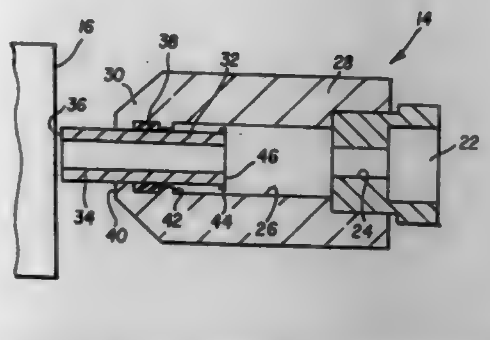

nozzle and the surface tangential to the surface such that only polishing and not cutting of the glass occurs.

5,700,182
APPARATUS AND METHOD FOR AUTOMATED HONING OF ELONGATED STRAIGHT-EDGED CUTTING BLADES
Lance A. Dunbar, Thomasville, and E. Anthony Miller, Spring Grove, both of Pa., assignors to Dunbar & Miller, Thomasville, Pa.
Filed May 25, 1995, Ser. No. 449,885
Int. Cl.⁶ B24B *3/38*
U.S. Cl. 451—45 **18 Claims**

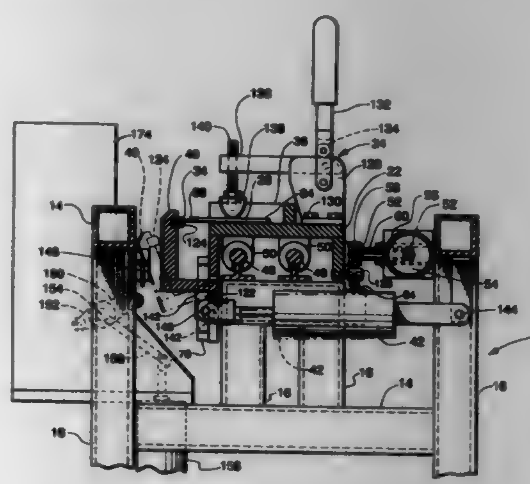

1. An apparatus for automated honing of elongated straight-edged cutting blades said apparatus comprising in combination, a support frame having assembled thereto a moveable blade holder support provided with a blade set jig pivotally assembled to said support frame for registering a cutting edge of said blade, said jig cooperative with a blade register end stop at a honing head station infeed end thereof said end stop bring perpendicularly positioned to a longitudinal axis of said apparatus, a plurality of regularly spaced clamp means assembled to said blade holder support being adapted to registrably secure by means of said jig and said blade register end stop at least one sharpened straight-edged cutting blade compressivly thereto for automated honing, a pneumatic drive piston assembly for cyclicly displacing said moveable blade holder support from a place of beginning linearly along the longitudinal axis of said apparatus, a blade honing station longitudinally displaced from the place of beginning along said longitudinal axis having a cooperative plurality of orbitally driven blade honing heads adapted to sequentially engage and progressively hone a cutting edge of said sharpened straight-edged cutting blade to a finished honed state on a single longitudinally displaced cycle therethrough, and a recycle switch assembly to automatically return said moveable blade holder support to said place of beginning at the end of said single longitudinally displaced cycle.

5,700,183
SANDING WHEEL ASSEMBLY
M. Ray Fletcher, Lexington, N.C., assignor to Fletcher Machine, Inc., Lexington, N.C.
Filed Apr. 22, 1996, Ser. No. 635,494
Int. Cl.⁶ B24B *19/24*
U.S. Cl. 451—182 **14 Claims**

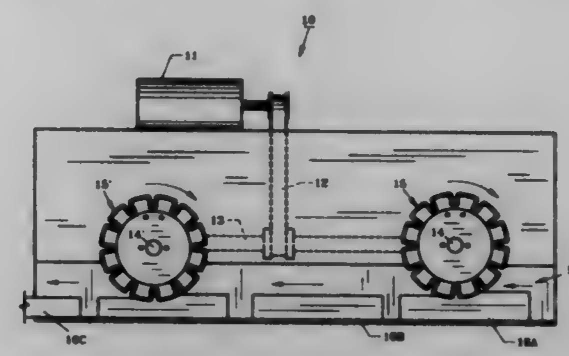

1. A sanding wheel assembly utilizing an endless sanding belt comprising: a sanding ring, said sanding ring defining a notch, a rachet wheel, said rachet wheel defining an arcuate slot, a belt tensioning lever, said tensioning lever contiguous to said rachet wheel, a guide plate being mounted between said sanding ring and said rachet wheel, said guide plate defining a pinion aperture, a ratchet wheel cover plate being positioned contiguous to said rachet wheel, said ratchet wheel cover plate defining a pinion aperture, a pinion engaging said rachet wheel and being positioned in the apertures defined by said guide wheel and said ratchet wheel cover plate, whereby rotating said rachet wheel relative to said sanding ring will cause said tensioning lever to urge said sanding belt into said notch to tighten said sanding belt on said sanding ring.

5,700,184
DENTAL INSTRUMENT SHARPENING SYSTEM
David D. Domenella, 9716 Rte. 12, Richmond, Ill. 60071
Division of Ser. No. 231,147, Apr. 22, 1994, Pat. No. 5,584,691, which is a continuation-in-part of Ser. No. 908,038, Jul. 9, 1992, Pat. No. 5,331,774. This application Jun. 19, 1996, Ser. No. 668,656
Int. Cl.⁶ B24B *3/60*
U.S. Cl. 451—194 **8 Claims**

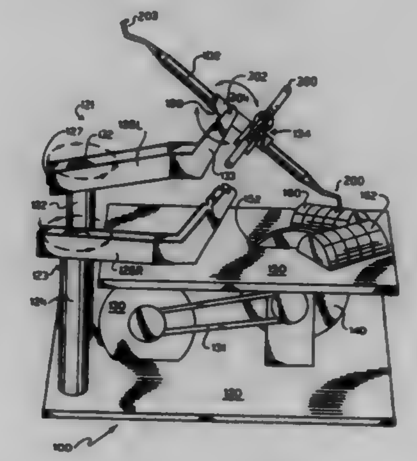

1. A sharpening device for accurately sharpening chiral blades of a dental instrument, the device comprising:
housing means for holding a rotatable sharpening stone;
dental instrument holding means, operatively connected to said housing means, for securing at least one of the chiral blades in a predetermined position;
positioning guide means, operatively coupled to said housing, and having empirically determined indicia thereon representing a tangential position between the at least one chiral blade and said positioning guide means to facilitate repetitive positioning of said at least one of the chiral blades in said predetermined position;
said dental instrument holding means being pivotal for moving the at least one chiral blade between said indicia on said positioning guide means and said rotatable sharpening stone to facilitate placing of the at least one chiral blade on the empirically determined indicia to position the at least one chiral blade, and for subsequently moving the positioned chiral blade in desired contact with said sharpening stone.

5,700,185
PIN VISE
Dean Halonie, 5435 Austin Lake Rd., Webster, Wis. 54893
Filed Aug. 12, 1996, Ser. No. 689,598
Int. Cl.⁶ B25B *5/04*
U.S. Cl. 451—365 **11 Claims**

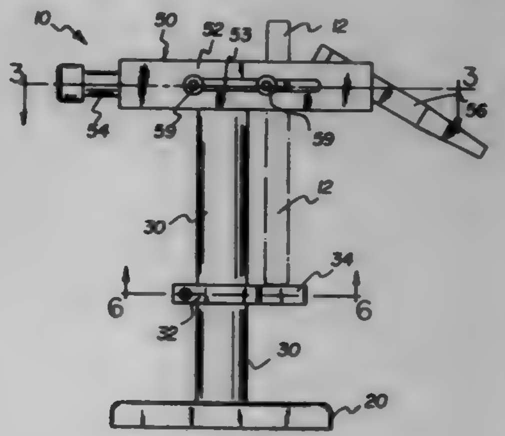

1. A Pin Vise comprising
a base member;
a support shaft having one end secured to the base member;
a top member secured to the support shaft above the base member in a substantially parallel relationship to the base member, said top member having a cylindrical spring recess at one end of the top member and a substantially V-shaped notch at the opposite end of said top member; and
a spring-loaded pin retaining means slidably secured to the top member for removably retaining various sizes of pins between said pin retaining means and the top member for grinding to a specified length,
wherein the spring-loaded pin retaining means includes an L-shaped member having a longer leg and a shorter leg, said L-shaped member having an aligning slot in the longer leg; and
at least two aligning bolts slidably projecting through the aligning slot of said L-shaped member and being secured to the top member to permit the L-shaped member to slide in the plane of the cylidical spacing recess and the V-shaped notch of said top member.

5,700,186
MOTORIZED SPINDLE WITH INDEXING FIXTURE
Timothy W. Hykes, and Joel Metzler, both of Greencastle, Pa., assignors to Western Atlas Inc., Waynesboro, Pa.
Filed Dec. 4, 1995, Ser. No. 566,967
Int. Cl.^{6} B24B *41/06*
U.S. Cl. 451—406 **9 Claims**

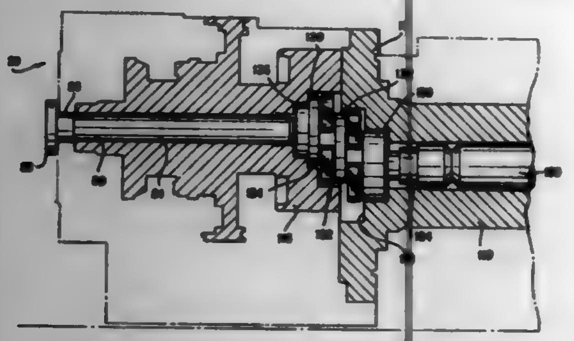

1. A motorized spindle for rotatively driving and indexing a workpiece with spaced bearing shafts at opposite ends, relative to a grinding tool, said motorized spindle comprising:
a) a spindle body including:
1) a primary drive shaft extending longitudinally along a first axis through the center line of said body,
2) a secondary drive shaft extending longitudinally through said body along a second axis, said secondary drive shaft being located parallel to, and offset from, said primary drive shaft,
3) a motor secured to said primary drive shaft to rotatatively drive said shaft,
4) coupling means for connecting said primary drive shaft to said secondary drive for delivering torque from said motor,
b) an indexing fixture including:
1) means for securing said indexing fixture to said secondary drive shaft,
2) clamping means adapted to receive the workpiece, and retain same in operative position relative to said grinding tool,
c) locking means interposed between said spindle body and indexing fixture, and
d) means for biasing said locking means into an engaged position so that said spindle body and said indexing fixture are driven in a unitary manner, by said motor through said primary and secondary drive shafts and said coupling means.

5,700,187
TOOL TO STOPPER AND ABRADE CONCAVE AND CONVEX SURFACES
Gaetano Balbi, Via R. Quartini n. 5/4, I-16019 Ronco Scrivia-Genova, Italy
Filed Sep. 26, 1996, Ser. No. 721,102
Int. Cl.^{6} B24D *17/00*
U.S. Cl. 451—495 **6 Claims**

1. Tool for stoppering and abrasion of concave and convex surfaces characterized in that it consists of:
a usually rectangular supporting base plate (1) in elastic deformable material, the short sides of which are deemed to be the transverse legs and the longer sides are deemed to be the longitudinal legs of the rectangle,
two upwards slanting interconnecting elements (2) in plates having a low deformability index, their lower ends being rigidly secured to the transverse ends of the supporting base (1);
two rotating cross journals (6) each fixed to the upper end of the interconnecting elements (2), each journal (6) featuring at both ends threaded holes (9') as well as a a respectively right and left-handed threaded through-hole (3',4') drilled in the center of the journal (6),

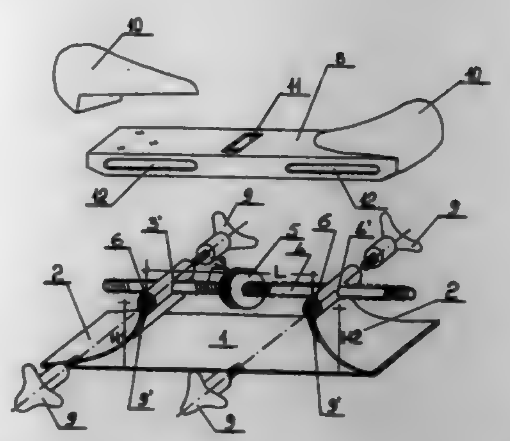

a screw (3,4,), half of which is left-threaded (3) and the other half is right-threaded (4) separated by a small control wheel (5) so that the threads (3,4) are meshing with corresponding central threads of the respective through-hole (3', 4') of the two cross journals (6),
a guide (8) bearing the handgrip (10) usually having an upside-down U-shape, featuring a central hole (11) through which the control wheel (5) protrudes and lateral slots (12) through which to fit the screws (9) into the borings in the cross journals (6), thus blocking these journals (6) to the supporting guide (8).

5,700,188
COATED ABRASIVE BELT
Eckart Uhlmann, Kiebietzreihe, and Gerhard Struth, Hamburg, both of Germany, assignors to Hermes Schleifmittel GmbH, Hamburg, Germany
Filed Nov. 26, 1996, Ser. No. 756,481
Claims priority, application Germany, Nov. 29, 1995, 295 18 953 U
Int. Cl.^{6} B24D *11/00*
U.S. Cl. 451—532 **21 Claims**

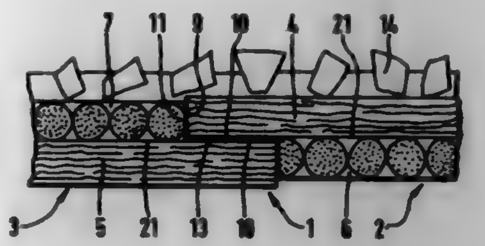

1. A coated abrasive belt comprising a flexible substrate and an abrasive grain layer on one side thereof, said abrasive belt having a belt running direction, said substrate comprising a longitudinal strength layer (4,5), designed for absorbing the largest part of the forces appearing in the belt running direction, and a transverse strength layer (6, 7), designed for absorbing the larger part of the forces extending transversely relative to the belt running direction; said belt having at least two end portions (2,3) connected to one another by means of at least one adhesive seam (1) extending transversely relative to the belt running direction; each of said end portions having a recess on the side of the transverse strength layer (6, 7), said recess (8) forming a connecting seam face (10) which extends approximately in said belt running direction and reaches at least near to the longitudinal strength layer (4, 5) to define a seam strip of the longitudinal strength layer (4, 5), each of said seam strips being complementary to and projecting into the recess (8) of the other end portion, the connecting faces (10) of the two recesses being adhesively bonded directly to one another, one of said two portions (2) carrying said grain layer (14) on its longitudinal strength layer (4) and the other portion (3) carrying it on its transverse strength layer (7).

5,700,189
KNIFE-BLADE SHARPENING APPARATUS
Jimmie L. Farris, 37106 Lake Rd., Shawnee, Okla. 74801
Filed Jul. 8, 1996, Ser. No. 678,578
Int. Cl.^{6} B24D *15/08*
U.S. Cl. 451—555 **26 Claims**

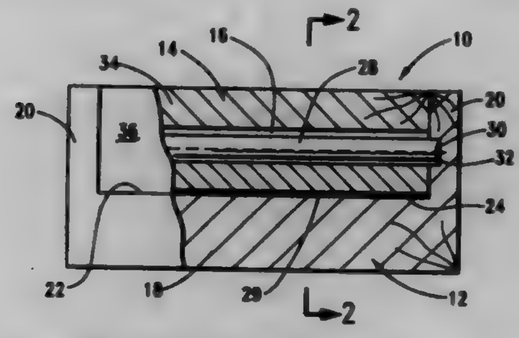

1. A blade-sharpening apparatus comprising:
a sharpening element comprising a ceramic tube subjected to heat expansion and contraction cycles such that the surface thereof is made porous; and
support means for supporting said sharpening element during a sharpening operation in which a blade is moved across an outer surface of the sharpening element.

5,700,190
FLOWHOOD WORK STATION
Roy P. Johnson, Yacolt, and Donald L. Wilkinson, Camas, both of Wash., assignors to SEH America, Inc., Vancouver, Wash.
Filed Aug. 28, 1996, Ser. No. 704,268
Int. Cl.^{6} B08B *15/02*
U.S. Cl. 454—57 **6 Claims**

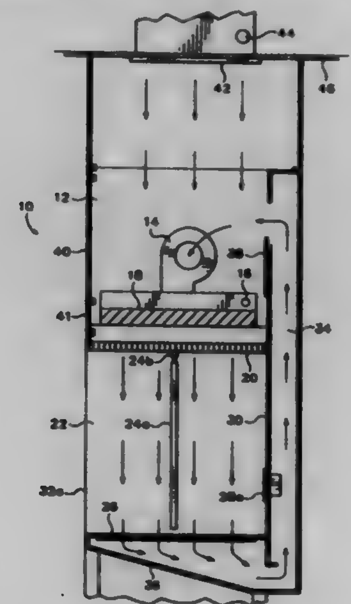

1. A flowhood work station in a clean room having a ceiling-mounted air vent, comprising:
(a) an inspection chamber having a vertical back wall and two vertical side walls and a perforated inspection surface, said inspection chamber further defining a front opening opposite said back wall to allow access from said clean room to said perforated inspection surface;
(b) an air filtration housing in fluid communication with said ceiling mounted air vent and said perforated inspection surface;
(c) a blower within said housing capable of directing air downwardly through said perforated inspection surface; and
(d) a return air plenum in fluid communication with said perforated inspection surface and with said air filtration housing that captures a substantial portion of said air passing through said perforated inspection surface and directs said air to said air filtration housing.

5,700,191
OPERATING PANEL FOR A MOTOR VEHICLE AIR-CONDITIONING SYSTEM
Andreas Nieling, Asperg; Wolfgang Frank, Ditzingen; Holger Kissel, Griesheim; Reinhard Koehler, Riedstadt, and Werner Mueller, Otzberg, all of Germany, assignors to Behr GmbH & Co., Stuttgart, Germany
Filed Apr. 12, 1996, Ser. No. 631,194
Claims priority, application Germany, Apr. 13, 1995, 195 13 478.8
Int. Cl.^{6} B60H *1/32*
U.S. Cl. 454—69 **6 Claims**

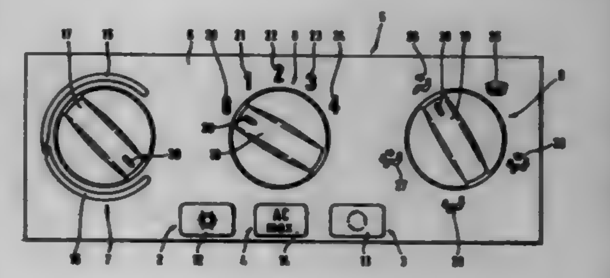

1. An operating panel for a motor vehicle air-conditioning system, comprising:
a heating device;
a cooling unit with a switch for switching the cooling unit on and off;
an air blower with a speed control device for setting the blower speed;
a damper with a damper movement controller for moving the damper between a fresh air position and an air recirculating position, wherein the damper movement controller is an electromechanical actuating member;
a blower speed actuating element connected to the speed control device for selectively setting the blower speed;
an air temperature actuating element for selectively setting the incoming-air temperature;
an air distribution actuating element for selectively setting air distribution in a vehicle passenger compartment;
a damper actuating element for selectively actuating the damper;
a maximum air cooling actuating element for maximum air cooling of the air in a vehicle passenger compartment; and
a coupler connecting the maximum air cooling actuating element to the damper movement controller, to the blower speed control device, and to the cooling unit switch so that actuation of the maximum air cooling actuating element sets the damper to the air recirculating position, the blower to a predetermined speed, and the cooling unit to a maximum output,
wherein the coupler comprises at least one electric switch actuated by the maximum air cooling actuating element and electric connecting lines to the blower speed control device and the damper controller, the electric switch being provided with a contact for switching the electromechanical actuating member for moving the damper to the air recirculating position.

5,700,192
REGISTER WITH INJECTOR NOZZLE
Martin Rump, 1550 Glen Abbey Dr., Burnabyn, B. Co, Canada, V5A4C8
Filed Jul. 30, 1996, Ser. No. 681,955
Int. Cl.⁶ F24F *11/053*
U.S. Cl. 454—258 **1 Claim**

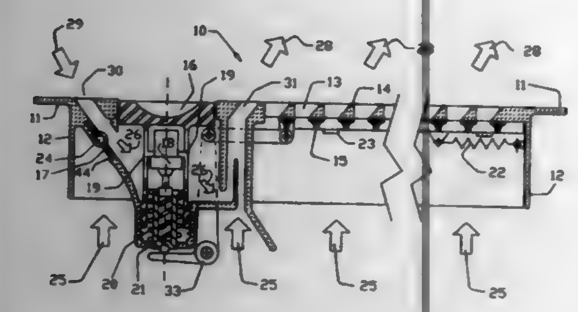

1. A heating and cooling register for admitting forced air into the room from a forced air system, comprising:
a housing, said housing defining a top flanged having an opening disposed generally centrally therein;
a first plurality of elongated ribs extending parallel to each other across said opening and spaced apart from each other to define spaces therebetween, each rib having a bottom edge;
a second plurality of elongated ribs extending parallel to each other and spaced apart from each other to define spaces therebetween; said second elongated ribs being disposed adjacent said bottom edge of the first elongated ribs, means for sliding said second elongated fibs with respect to said first elongated ribs for opening and closing said opening;
said means for sliding including a lever assembly pivotably attached to said second elongated ribs for the movement thereof, said lever assembly being L-shaped with a long arm and a short arm, said lever assembly being pivotably attached to the housing at the junction of the L-shape, and actuating means for moving said second elongated fibs via said lever assembly, said actuating means being a thermostatic element having it plunger for engaging said short arm, said long arm being pivotably attached to said second elongated ribs; and
means for alternatively supplying said forced air, room air, or forced air and room air to said thermostatic whereby the flow of air through said opening is controlled.

5,700,193
VIRTUAL PINBALL/VIDEO ARCADE GAMES
Johannes F. M. d'Achard Van Enschut, Eindhoven, Netherlands, assignor to U.S. Philips Corporation, New York, N.Y.
Filed Mar. 28, 1996, Ser. No. 623,646
Claims priority, application European Pat. Off., Apr. 18, 1995, 95200968
Int. Cl.⁶ A63F *7/24*
U.S. Cl. 463—3 **11 Claims**

1. A virtual pinball/video arcade game comprising housing means with a display field for displaying one or more computer-generated runner elements, runner inject elements, and runner interactivity elements, and furthermore programmed computer means for simulating movement of said one or more runner elements interfered with by simulated mechanical interactions between said inject and interactivity elements, the simulated movement of said one or more runner elements, and user actions on a user interface,

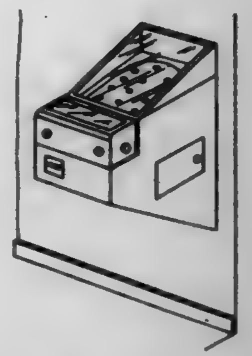

characterized in that said computer means furthermore have feedback actuator means controlled by said programmed computer means for imparting low-frequency primary physical interactions to said housing means as a reaction on selected ones of said simulated mechanical interactions.

5,700,194
JOYPAD CIRCUIT FOR PLAYING PC GAMES
Ming-kun Hsien, No. 53, Chungcheng Rd., Hsitzu Chen, Taipei Hsien, Taiwan
Filed May 6, 1996, Ser. No. 642,862
Int. Cl.⁶ A63F *9/24*
U.S. Cl. 463—37 **4 Claims**

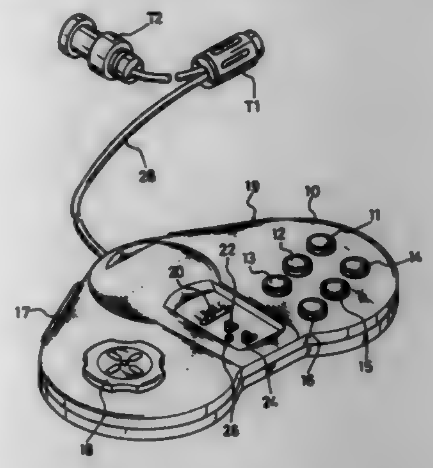

1. A programmable joypad for playing PC games comprising:
a panel having a plurality of control buttons, a directional button, a switching button, a mode selecting switch, a four/eight direction mode switch, a setting switch; and
a control circuit having a microprocessor, a memory, a switching circuit, and a parallel/serial conversion circuit, wherein
said microprocessor has a plurality of input and output pins respectively coupled with said control buttons, said directional button, said switching button, and mode selecting switch, and setting switch, a data input pin coupled to the PC, a clock pin coupled to the PC, a set pin coupled to said parallel/serial conversion circuit via the direction mode switch, the setting switch, and a control pin coupled to the switch circuit, which is composed of a first transistor having a collector connected to a clock pin of a keyboard, an emitter connected the clock pin of the microprocessor, and a base respectively connected to the control pin of the microprocessor and a clock line of the keyboard via a diode and a second transistor having a collector connected to the data line of the keyboard, a base connected to the base of the first transistor, and an emitter connected to the data pin of the microprocessor.

5,700,195
SLOT MACHINES HAVING SECURITY FOR BILL VALIDATOR AND BILL STACKER
Vladimir Halic, Wollongong, Australia, assignor to Aristocrat Leisure Industries, Sydney, Australia
Filed Apr. 3, 1996, Ser. No. 626,816
Int. Cl.⁶ G07F *17/34;7/04*
U.S. Cl. 463—29 **3 Claims**

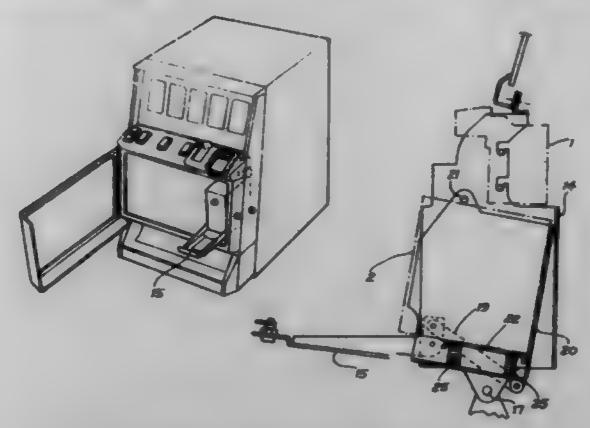

1. A slot machine comprising a cabinet, a first lockable door giving access to the interior of the cabinet, a second lockable door hingedly mounted in the first, a bill validator associated with a bill stacker arranged within the cabinet and supported in a housing, the housing having a lockable means controlling removal of the bill stacker from the housing, the said lockable means being accessible only through said second lockable door, the bill validator being accessible only through first lockable door for servicing or replacement.

5,700,196
OVERLOAD CLUTCH
Reiner Banemann, Rheine; Bernd Tenfelde, Spelle, and Reinhard Wibbeling, Hörstel, all of Germany, assignors to KTR Kupplungstechnik GmbH, Rheine, Germany
Filed Oct. 24, 1995, Ser. No. 547,241
Claims priority, application Germany, Dec. 16, 1994, 44 45 017.6
Int. Cl.⁶ F16D *7/08;43/20*
U.S. Cl. 464—36 **7 Claims**

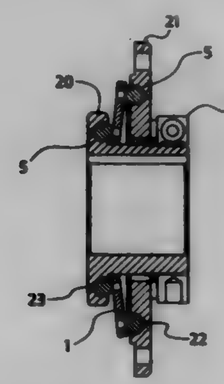

1. A clutch for transmitting and limiting torque from a driving machine with a hub comprising a driving side, to a driven device comprising a driven side, said clutch comprising:
a pair of pressure rings, one on the driving side and one on the driven side, each ring having a lateral surface facing the other ring;
a ring-shaped plate spring surrounding the hub of the driving machine and located in between said pressure rings, said plate spring having an inner circumference and an outer circumference;
a plurality of force-transmitting elements arranged on the pressure rings;
means for detachably engaging the force-transmitting elements from torque transmission with the plate spring, said means located only at the inner and outer circumferential portions of the plate spring and selected from the group consisting of bores and depressions;
wherein said force-transmitting elements create a detachable connection between said plate spring and the pressure rings and wherein said connection engages to transmit torque between said pressure rings, and detaches to limit the torque and allow said pressure rings to turn relative to one another until another connection is formed.

5,700,197
FLEXIBLE SHAFT COUPLING HAVING A PLURALITY OF DRIVING SIDE LEAF SPRING MEMBERS, A PLURALITY OF DRIVEN SIDE LEAF SPRING MEMBERS AND ONE RELAY MEMBER
Sadatomo Kuribayashi, Tokyo, Japan, assignor to Kay Seven Co., Ltd., Tokyo, Japan
Continuation of Ser. No. 279,567, Jul. 25, 1994, abandoned. This application Apr. 24, 1997, Ser. No. 847,285
Claims priority, application Japan, Jul. 28, 1993, 5-205726; Oct. 4, 1993, 5-269447
Int. Cl.⁶ F16D *3/62*
U.S. Cl. 464—69 **5 Claims**

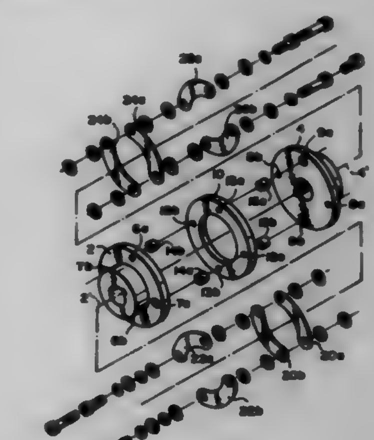

1. A flexible shaft coupling, comprising:
a driving side flange portion having a first front surface and a first rear surface;
a driven side flange portion having a second front surface and a second rear surface;
a relay member for relaying torque from said driving side flange portion to said driven side flange portion, said relay member being disposed between said first front surface of the driving side flange portion and said second front surface of the driven side flange portion;
four driving side leaf spring members arranged circumferentially on said first rear surface of the driving side flange portion, each of said driving side leaf spring members having a first end portion and a second end portion, wherein said first end portion of each of said driving side leaf spring members overlaps on the first end portion of one of two neighboring driving side leaf spring members and is secured to said first rear surface of the driving side flange portion, and said second end portion of each of said driving side leaf spring members overlaps on the second end portion of the other of two neighboring driving side leaf spring members and is secured to said relay member, so that said driving side leaf spring members are connected to said relay member at two first circumferential positions located opposite to each other, relative to a rotational axis of the driving side flange portion and

are connected to said driving side flange portion at two second circumferential positions located opposite to each other relative to the rotational axis of the driving side flange portion, said two first circumferential positions and said two second circumferential positions being disposed evenly in circumferential direction; and

four driven side leaf spring members arranged circumferentially on said second rear surface of the driven side flange portion, each of said driven side leaf spring members having a third end portion and a fourth end portion, wherein said third end portion of each of said driven side leaf spring members overlaps on the third end portion of one of two neighboring driven side leaf spring members and is secured to said second rear surface of the driven side flange portion, and said fourth end portion of each of said driven side leaf spring members overlaps on the fourth end portion of the other of two neighboring driven side leaf spring members and is secured to said relay member, so that said driven side leaf spring members are connected to said relay member at two third circumferential positions located opposite to each other relative to a rotational axis of the driven side flange portion and are connected to said driven side flange portion at two fourth circumferential positions located opposite to each other relative to the rotational axis of the driven side flange portion, said two third circumferential positions and said two fourth circumferential positions being disposed evenly in circumferential direction,

said two first circumferential positions and said two third circumferential positions being disposed evenly in circumferential direction.

5,700,198

ELASTIC COUPLING WITH SHAPED ELASTIC MEMBERS FOR SETTING A CIRCUMFERENTIAL/AXIAL ELASTICITY RATIO

Kazuya Takano, Kanagawa-ken, Japan, assignor to Bridgestone Corporation, Tokyo, Japan

Filed Jan. 30, 1995, Ser. No. 380,897

Claims priority, application Japan, Feb. 7, 1994, 6-034184

Int. Cl.⁶ F16D *3/28;3/70*

U.S. Cl. 464—71 **4 Claims**

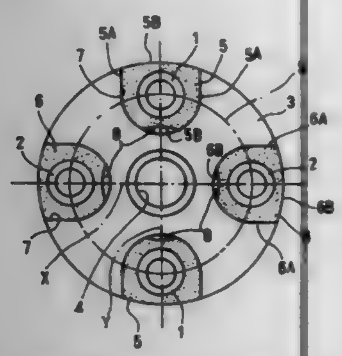

1. An elastic coupling for connecting a driving shaft and a driven shaft to transmit power from one shaft to the other shaft, comprising:

a disc member having a central hole formed therein;

the disc member having recesses opening outwardly to a periphery of said disc member and extending through said disc member in directions parallel an axis of said central hole to open at opposing surfaces of said disc member;

elastic members disposed in the recesses;

first connecting members for connection to the driving shaft, disposed diametrically in the disc member on a circle concentric with the central hole and within alternate ones of said elastic members;

other connecting members for connection to the driven shaft, disposed diametrically in the disc member on the concentric circle and within other alternate ones of said elastic members,

the driving and driven connecting members being alternately and regularly spaced from one another; and

said elastic members surrounding the circumferences of the first connecting members and the other connecting members;

each of the elastic members defining a gap between an inner side portion of each elastic member facing the center of the concentric circle and the bottom of the respective recess in the disc member to avoid joining each elastic member to the disc member at the gap;

the elastic members being exposed at respective outermost end portions thereof away from the center of the concentric circle, where the recesses open outwardly, to avoid joining the elastic members to the disc member at the outermost end portion of each elastic member; and

the elastic members being joined to the disc member only at portions other than their respective innermost and outermost portions, whereby the elastic member is elastically harder in a direction circumferentially thereof than axially thereof.

5,700,199

METHOD FOR SIZING A LOCK NUT

Ned J. Gruca, St. Charles, and Michael E. Ward, Geneva, both of Ill., assignors to Illinois Tool Works Inc., Glenview, Ill.

Filed Apr. 8, 1996, Ser. No. 628,982

Int. Cl.⁶ B21D *53/24*

U.S. Cl. 470—19 **10 Claims**

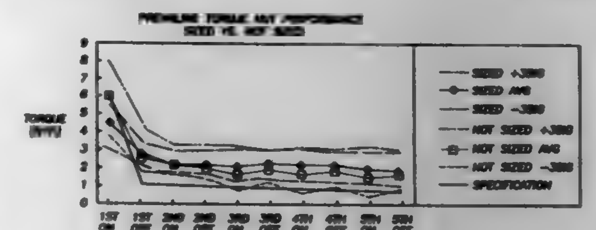

1. A method for making a lock nut engagable and retainable about a threaded shaft, the method comprising steps of:

threading a bore of a body member for receiving a threaded shaft;

deforming at least a portion of the bore to provide a shaft engaging means engagable with a threaded shaft disposed in the deformed bore;

sizing the deformed portion of the threaded bore with a threaded sizing tool by threading the sizing tool through at least the deformed portion of the threaded bore, the threaded sizing tool oversized relative to the deformed portion of the bore and undersized relative to any undeformed portion of the bore,

wherein the sized lock nut has a relatively consistent torque performance and a reduced statistical spread over several installation and removal cycles of the nut about the threaded shaft.

5,700,200

SAFETY PLAYING WHEEL MEANS

Shan-Nan Su, 26, Lane 143, Hsin-Sheng S. Rd., Sec. 1, Taipei (106), Taiwan

Filed Oct. 21, 1996, Ser. No. 734,752

Int. Cl.⁶ A63G *1/12*

U.S. Cl. 472—26 **2 Claims**

1. A playing wheel means comprising:

a playing wheel rotatably mounted on a base secured on a fixture in a playground; said playing wheel including a central hub portion rotatably mounted on the base by a shaft fixed in the base, a solid spoke portion diverging radially outwardly from said central hub portion having a spoke periphery portion annularly formed on an outer periphery of said spoke portion,

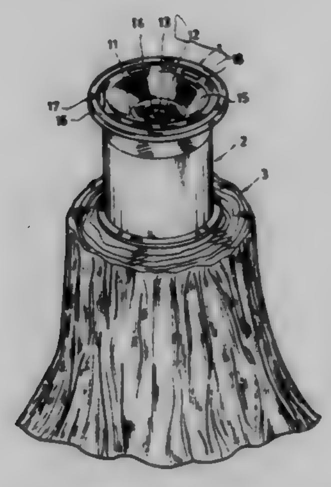

a plurality of finger slots intermittently formed in the spoke periphery portion for inserting the four fingers of index, middle, ring and little fingers of a child's hand into each said finger slot, and an outermost rim portion circumferentially formed on an outermost portion of said wheel adjacent to said spoke periphery portion to be grasped by one thumb and the four fingers of one said child's hand for rotating said wheel for playing.

5,700,201

CHILD ENTERTAINMENT DEVICE WITH FLEXIBLE SUPPORT LEGS

William Bellows, Sinking Springs; Paul Nelson, Elverson, and Mark Messner, Reading, all of Pa., assignors to Grace Children's Products Inc., Elverson, Pa.

Filed Nov. 9, 1995, Ser. No. 555,531

Int. Cl.⁶ A63G *13/08*

U.S. Cl. 472—103 **16 Claims**

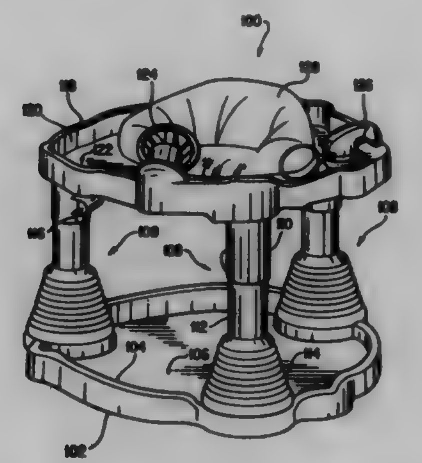

1. A child entertainment device with an improved range of motion comprising:

a base structure;

a plurality of support legs connected to the base structure, each support leg having a rigid section and a flexible section, the flexible section disposed proximate to the base structure and disposed below the rigid section, the flexible section of the support leg including a spring connected to the rigid section and to the base structure and a motion limiting device to prevent excessive expansion of the spring; and

a child support structure including a child seat connected to the plurality of support legs.

5,700,202

GOLF SWING TRAINING DEVICE

Edwin L. Tucker, 4801 Laurel Oaks Dr., Greensboro, N.C. 27406

Filed Aug. 19, 1996, Ser. No. 699,575

Int. Cl.⁶ A63B *69/36*

U.S. Cl. 473—142 **19 Claims**

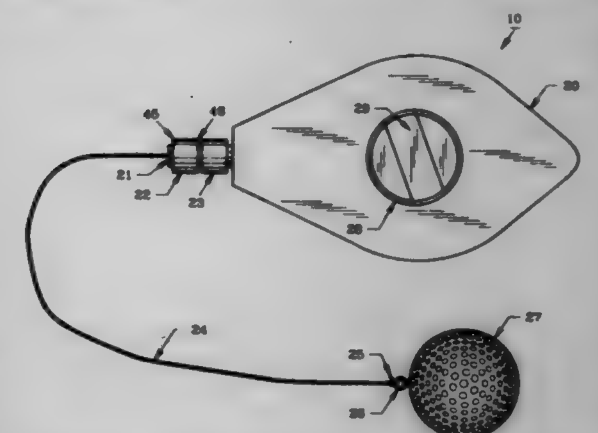

1. A device to retard the flight of a ball, said device comprising:

(a) a ball;

(b) a line, said line attached to said ball;

(c) a weight, said weight slidably positioned on said line, said weight having mass sufficient to dampen substantially the flight of said ball;

(d) a reel, said line connected to said reel; and

(e) a weight retainer, said weight retainer connected to said reel, said weight retainer defining an aperture, said line passing through said weight retainer aperture.

5,700,203

GOLF TRAINING DEVICE

Frank Shieh, 1F, No. 19, SzuWei Street, ChuNan, MiaoLi Hsien, Taiwan

Filed Dec. 6, 1996, Ser. No. 761,524

Int. Cl.⁶ A63B *69/36*

U.S. Cl. 473—139 **11 Claims**

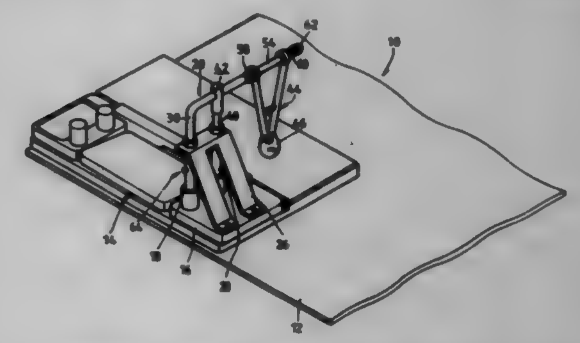

1. A golf training device comprising an anchoring base having a primary column extending upright therefrom and having an axially extending first bore, a support comprising a first section having a lower end movably received within the first bore of the primary column and an upper end extending a distance out of the first bore and a second section extending transversely from the upper end of the first section to define a cantilever configuration and a dummy ball assembly comprising a spherical member and two spaced suspension rods having lower ends connected to and extending from the spherical member in an inclined, diverging manner to upper ends that are spaced from each other with a tubular member connecting between the upper ends, the tubular member having a central bore to slidably fit onto the second section of the support so as to rotatably suspend the spherical member under the second

section of the support and to allow relative moment of the dummy ball assembly with respect to the support, each of the suspension rods having biasing means associated therewith for counteracting a component of an external force applied to the spherical member along a direction parallel with the second section.

5,700,204
PROJECTILE MOTION PARAMETER DETERMINATION DEVICE USING SUCCESSIVE APPROXIMATION AND HIGH MEASUREMENT ANGLE SPEED SENSOR
Rein S. Teder, 9401 Xylon Ave. S., Bloomington, Minn. 55438
Filed Jun. 17, 1996, Ser. No. 668,431
Int. Cl.⁶ A63B *69/36*
U.S. Cl. 473—199 **31 Claims**

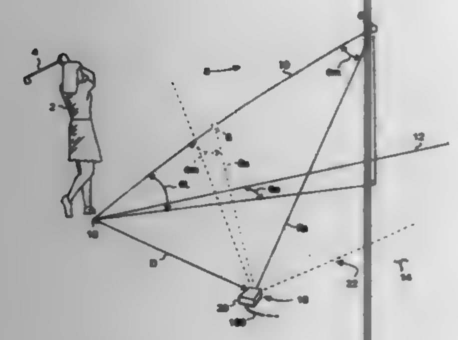

1. An apparatus for determining at least one parameter regarding the motion of a projectile struck by a piece of sporting equipment, said apparatus comprising:
a) a radial speed measuring device, wherein said radial speed measuring device measures a component of the true speed of said projectile subtending a radial from said radial speed measuring device to said projectile, whereby said component forms an apparent speed of said projectile;
b) memory means for storing data;
c) acquisition means, operatively coupled to said radial speed measuring device and to said memory means, for acquiring a plurality of apparent speeds of said projectile, wherein at least some of the plurality of apparent speeds differs substantially from the corresponding true speeds of said projectile; and
d) computing means for determining the parameter, said computing means using at least some of the acquired plurality of apparent speeds differing substantially from the corresponding true speeds of said projectile to determine the parameter.

5,700,205
SPORTS TRAINING SYSTEM
James Robert Markus Sanford, Mauriceville, Tex., assignor to Helena Laboratories Corporation, Beaumont, Tex.
Filed May 30, 1996, Ser. No. 655,377
Int. Cl.⁶ A63B *69/36*
U.S. Cl. 473—232 **14 Claims**

1. Apparatus for recording deflection of a golf club shaft having a first axis, comprising:
deflection detecting means adapted to be mounted to said golf club shaft and to provide outputs indicative of the deflection of said golf club shaft during a golf club swing, including a back swing and a forward swing; and
recording means adapted to be mounted to said golf club shaft and positioned to receive an input from said deflection detecting means indicative of the deflection of said golf club shaft during a golf club swing, including a back swing and a forward swing; and

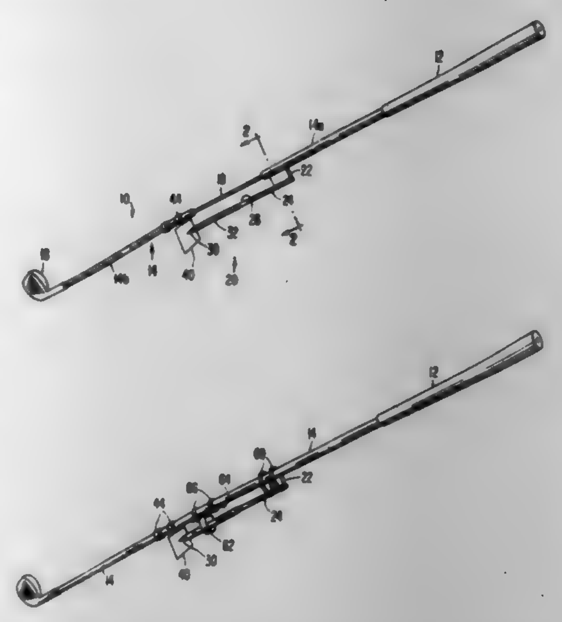

mean for biasing said deflection detecting means into contact with said recording means.

5,700,206
GOLF PUTTER STRUCTURE
Shen-Ju Lin, 2F, No. 11-1, Hsin-Shin Street, Pei-Tou, Taipei, Taiwan
Filed Dec. 6, 1996, Ser. No. 761,523
Int. Cl.⁶ A63B *53/04*
U.S. Cl. 473—293 **3 Claims**

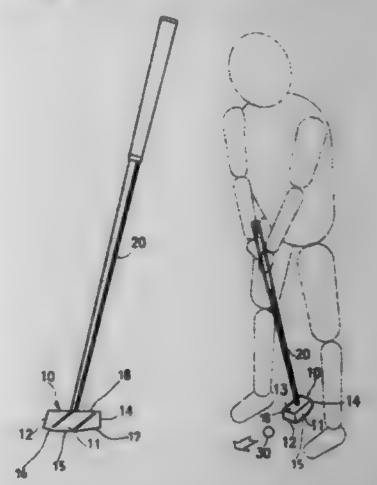

1. A golf putter structure comprising a handle having a lower end to which a head is mounted, the head comprising a top face attached to the lower end of the handle, a bottom face opposite to the top face, a front face which is substantially parallel with the handle, serving as a primary golf ball hitting face, a rear face which is inclined toward the handle as extending from the bottom face to the top face, a left side face and a right side face which is opposite to and symmetrical to the left side face, both the left and right side faces also serving as ball hitting faces, the bottom face comprising a front section that is inclined toward the front face and a rear section that is inclined toward the rear section, the front section and the rear section of the bottom face being configured so that the front face of the head has a bottom to top dimension greater than that of the rear face, the handle being attached to approximately a center of the top face and defining an angle rather than a right angle with respect to the top face, the handle having a length so as to allow the putter to be adapted to swing under the

crotch and between the legs by a golf player, wherein the putter is movable as a pendulum by the player to have the front face thereof to contact and drive a golf ball toward a front direction relative to the player so as to allow the player to control direction and magnitude of force applied by the player to putt the ball.

5,700,207
GOLF PUTTER WITH COUNTERBALANCED PUTTER HEAD
Dale Guthrie, #602, 12831-66 St., Edmonton, Alberta, Canada, T5C 0A4, and Tom Bennett, 17204-91 St., Edmonton, Alberta, Canada, T5Z 2M9
Filed Jul. 3, 1996, Ser. No. 675,057
Int. Cl.⁶ A63B *53/04*
U.S. Cl. 473—313 **6 Claims**

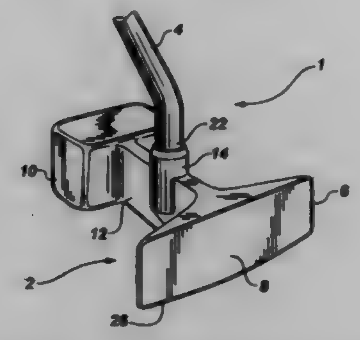

1. A golf putter counterbalanced about the base of the putter shaft which comprises:
a putter head, said putter head having a forward striking section with a striking surface thereon and a counterbalancing rearward section at the rear thereof, said forward and rearward sections being interconnected by a web to thereby form an integral putter head wherein said web is joined to said striking section at an apex of said striking section;
an elongate shaft mounted in association with said web at substantially the centre of gravity of said putter head;
a lower edge of said striking section being curved in both vertical and horizontal planes when said putter is in a use position; and
said forward striking section having a triangular cross section and said rearward counterbalancing section being generally rectangular in cross section.

5,700,208
GOLF CLUB HEAD
Kevin Nelms, 3824 Diamond Loch W., Forth Worth, Tex. 76180
Filed Aug. 13, 1996, Ser. No. 696,175
Int. Cl.⁶ A63B *53/04*
U.S. Cl. 473—324 **17 Claims**

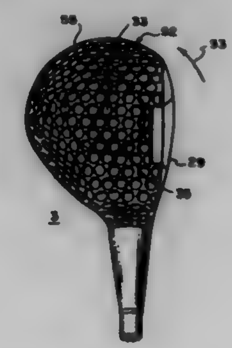

1. A golf club head comprising:
a face portion;
a body portion to which the face portion is connected and said body portion including a surface portion other than the face portion having a plurality of spaced indentations, wherein the golf club head has an axis centered around a center of mass, the axis having a first coordinate that is normal to the face portion and a second coordinate that is in parallel alignment with the face portion, the plurality of spaced indentations being aligned in a pattern that is in parallel alignment with the face portion, the first coordinate and the second coordinate and no member of the plurality or spaced indentations coincides with the first and second coordinate.

5,700,209
GOLF BALL
Michihiko Sugiura, Hiratsuka, Japan, assignor to The Yokohama Rubber Co., Ltd., Japan
Division of Ser. No. 503,923, Jul. 19, 1995, Pat. No. 5,586,951. This application Aug. 28, 1996, Ser. No. 705,863
Claims priority, application Japan, Jul. 21, 1994, 6-169704
Int. Cl.⁶ A63B *37/14*
U.S. Cl. 473—380 **11 Claims**

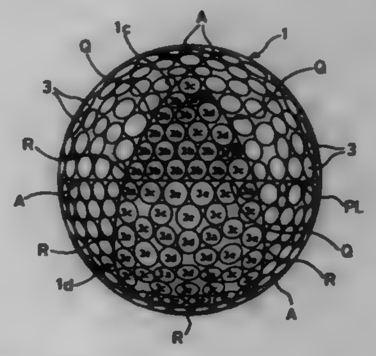

1. A golf ball, comprising:
a substantially spherical surface having a plurality of dimples of differing diameter arranged thereon;
eight spherical regular triangles and six spherical regular rectangles arranged on the spherical surface, each triangle sharing a same asymmetrical dimple pattern thereon, such that an arrangement of dimples extending across the triangle from each of three sides of each triangle differs from the arrangement of dimples extending from each of the two other sides thereof, all of the triangles sharing the same three differing side arrangements; and
four great circle paths arranged about the spherical surface, each great circle path being bounded on one side thereof by a series of three adjacent triangles, one of which is a reference triangle and the other two of which are respectively and angularly displaced at angles of 120° and 240° with respect to the reference triangle, and wherein a sequence of angular displacement of the series is consistent along all four great circle paths.

5,700,210
RACKET FRAME AND PROCESS FOR PRODUCING THE SAME
Kenjiro Takechi; Yasuhiro Ishigaki, and Hitomi Kojo, all of Hamamatsu, Japan, assignors to Yamaha Corporation, Japan
Filed Apr. 10, 1996, Ser. No. 629,498
Claims priority, application Japan, Apr. 20, 1995, 7-095418
Int. Cl.⁶ A63B *49/10*
U.S. Cl. 473—535 **1 Claim**

1. A racket frame having a frame main body, an ionomer film covering the frame main body, and a coating film formed over the ionomer film; the frame main body containing a fiber reinforced

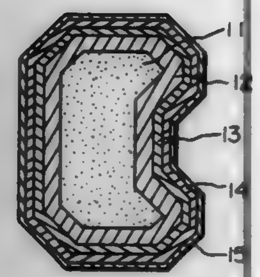

plastic; the racket frame comprising a gas permeable porous material film interposed between the ionomer film and the coating film.

5,700,211
BALL FOR THROWING IN PATTERNS IN WHICH A BASEBALL CAN BE THROWN
Christopher Jon Mackie, 7174 Spring Hill Rd., Lewisville, N.C. 27023
Filed Apr. 26, 1996, Ser. No. 639,126
Int. Cl.⁶ A63B *39/08*
U.S. Cl. 473—613 **15 Claims**

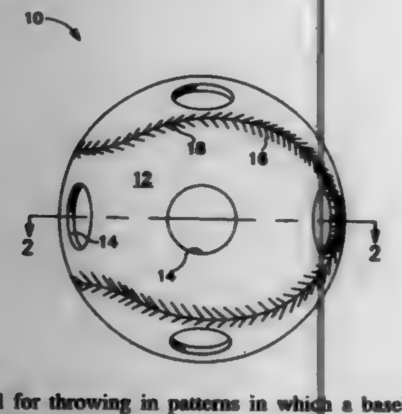

1. A ball for throwing in patterns in which a baseball can be thrown, said ball comprising:
(A) a hollow, round sphere defining a plurality of holes therethrough; and
(B) said sphere having an outer surface with a series of ridges thereon wherein said series of ridges is structured, raised from and forms a curved loop on said outer surface substantially similar to stitches on a baseball, said curved loop having a path which is substantially uninterrupted by said holes;
whereby said sphere can be thrown in patterns similar to patterns in which a baseball can be thrown.

5,700,212
SYSTEM FOR POWERING ROTATING ACCESSORIES OF AN INTERNAL COMBUSTION ENGINE
Richard J. Meckstroth, Northville, Mich., assignor to Ford Global Technologies, Inc., Dearborn, Mich.
Filed Jun. 3, 1996, Ser. No. 657,072
Int. Cl.⁶ F16H *9/00; 59/00; 61/00*
U.S. Cl. 474—70 **11 Claims**

1. A system for powering rotating accessories from a rotating shaft on an internal combustion engine, the system comprising:
a drive unit rotatably connected to said rotating shaft;
a drive unit clutch mounted to said drive unit;
an overrunning clutch mounted directly to said rotating shaft; and,
a plurality of rotating accessories rotatably connected to said drive unit through said drive unit clutch and rotatably connected to said rotating shaft through said overrunning clutch such that said accessories are driven by said drive unit at a

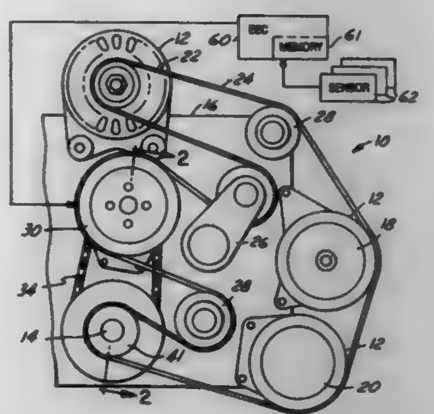

first speed ratio and driven directly by said rotating shaft at a second speed ratio, with said drive unit clutch operating at a predetermined threshold value of an engine operating condition thereby defining the transition between said first and second speed ratios, with said drive unit clutch being initially disengaged at engine start and engages at a predetermined time after engine start.

5,700,213
INTEGRAL INLET AND PRESSURE RELIEF VALVE FOR AN AUTOMOTIVE TENSIONER
Roger T. Simpson, Ithaca, and Kevin B. Todd, Freeville, both of N.Y., assignors to Borg-Warner Automotive, Inc., Sterling Heights, Mich.
Filed Aug. 18, 1995, Ser. No. 516,919
Int. Cl.⁶ F16H *7/08*
U.S. Cl. 474—110 **20 Claims**

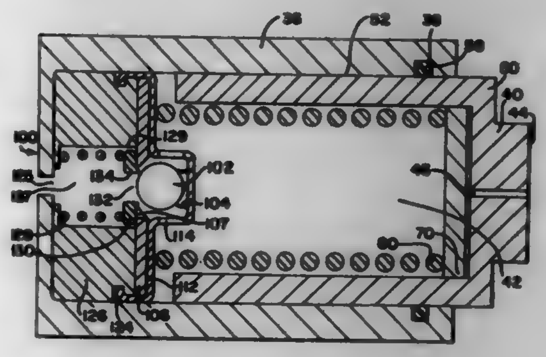

9. A hydraulic chain tensioner comprising:
a housing having a fluid chamber;
a plunger slidably received within the fluid chamber;
a spring biasing the plunger in a first direction extending from the fluid chamber; and
an integral inlet check and pressure relief valve disposed in the fluid chamber including an inlet check valve member, a check spring biasing said valve member in a second direction, said second direction opposite of said first direction, a pressure relief disk disposed proximate to said valve member, and a pressure relief spring biasing said relief disk in the first direction toward said valve member.

5,700,214
HYDRAULIC TENSIONER WITH LOCKING MECHANISM
Sam A. Kuznets, Burdett, and John Mortellaro, Jr., Ithaca, both of N.Y., assignors to Borg-Warner Automotive, Inc., Sterling Heights, Mich.
Filed Mar. 20, 1996, Ser. No. 618,966
Int. Cl.⁶ F16H *7/08*
U.S. Cl. 474—110 **6 Claims**

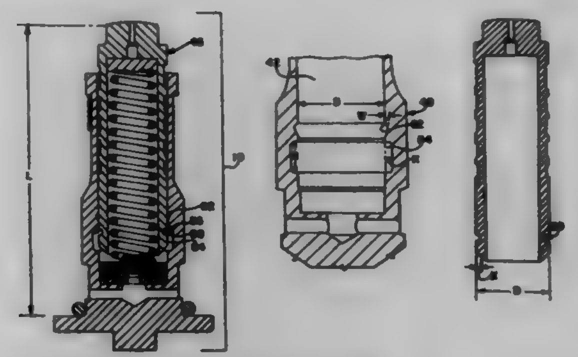

1. A hydraulic chain tensioner comprising:
a housing having a generally cylindrical bore;
a hollow piston slidably received within said bore to define a fluid chamber with said bore;
a spring biasing the piston in the protruding direction from said bore;
a first groove formed in the outside of said piston;
a second groove and a third groove each formed in said housing; and
a retainer ring located along said piston, application of external force to said piston being effective to move said piston inward to a first locked position having said ring in both said first groove and said second groove and restricting further movement of said piston, and application of additional external force to said piston being effective to move said piston inward to a second position to release said ring into said third groove, said ring in said third groove being radially outward of said piston to permit unrestricted movement of said piston.

5,700,215
HYDRAULIC TENSIONER WITH PISTON RETENTION STOP
Naosumi Tada, and Nauji Sakamoto, both of Nabari, Japan, assignors to Borg-Warner Automotive, K.K., Nabari, Japan
Filed Jul. 2, 1996, Ser. No. 675,389
Claims priority, application Japan, Aug. 11, 1995, 7-227263
Int. Cl.⁶ F16H *7/08*
U.S. Cl. 474—110 **4 Claims**

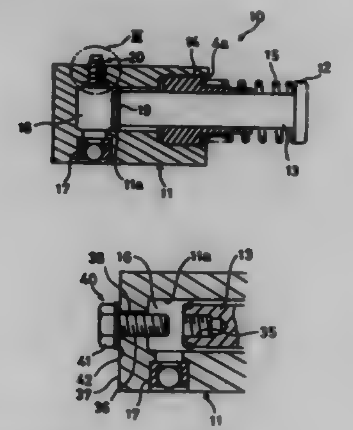

1. A hydraulic tensioner comprising:
a housing having an oil chamber formed in a bore in said housing;
a plunger inserted in said oil chamber and biased by a spring toward the protruding direction of said housing;
an engagement part located at the rear-end of said plunger;
a stopper screw for engagement with said engagement part when said plunger is retracted into said oil chamber in the plunger retraction position, said stopper screw being fastened to said housing;
a sealing member for sealing a clearance between said stopper screw and said housing when the stopper screw is fastened onto said housing.

5,700,216
HYDRAULIC TENSIONER FOR DUAL CHAIN SYSTEM
Roger T. Simpson, Ithaca, and Philip J. Mott, Dryden, both of N.Y., assignors to Borg-Warner Automotive, Inc., Sterling Heights, Mich.
Filed Dec. 5, 1996, Ser. No. 760,834
Int. Cl.⁶ F16H *7/08*
U.S. Cl. 474—110 **5 Claims**

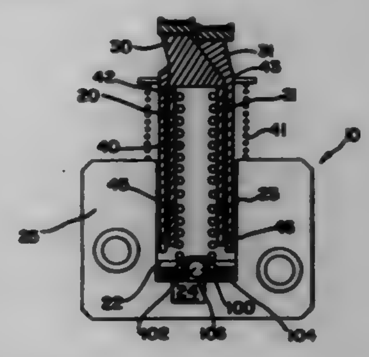

1. A hydraulic tensioner comprising:
a housing having a bore, said bore defining a fluid chamber;
inner and outer hollow pistons slidably received within one another within the bore, said inner piston pushing on a first tensioner arm and said outer piston pushing on a second tensioner arm;
a first spring located within the bore, said first spring biasing the inner piston in a protruding direction from said bore;
a second spring located at the top of the housing circumferentially outside of said inner and outer pistons, said second spring biasing the outer piston in a protruding direction from said bore;
a check valve provided between the chamber and a source of pressurized fluid to permit fluid flow from an oil supply inlet into the chamber while blocking flow in the reverse direction; and
a passage in the housing to connect the chamber with the source of pressurized fluid, the flow of fluid into said chamber causing outward movement of said inner piston and said outer piston from said bore.

5,700,217
POWER TRANSMISSION CHAIN WITH FORMED BUSHING AND ASSOCIATED APERTURE
Shozo Wakabayashi, Hirakata, Japan, assignor to Borg-Warner Automotive, K.K., Nabari, Japan
Filed May 16, 1996, Ser. No. 648,587
Int. Cl.⁶ F16G *13/04*
U.S. Cl. 474—217 **6 Claims**

1. A power transmission chain comprising a plurality of rows of interleaved links, each of said links having a pair of apertures, said links being interconnected pin by pivot members extending through aligned apertures of adjacent links, said pivot members

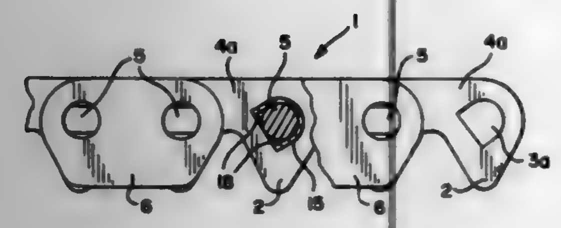

having a substantially circular cross-sectional shape, some of said rows of links being guide rows having guide links on the outermost sides of the said rows of links, said guide rows alternating with nonguide link rows,

said apertures in each link of at least one link row of a guide link row and a nonguide link row having a nearly D-shaped cross-section, said D-shaped cross-section including a near semicircular surface and a flat surface that connects both ends of the semicircular surface and,

said D-shaped apertures having a near semicircular cross-sectioned bushing inserted in said aperture, said semi-circular bushing coinciding with the said near semicircular surface of said D-shaped aperture, both ends of said bushing contacting the flat surface of said D-shaped aperture.

5,700,218

TWO-SPEED PLANETARY GEARSET HAVING LOCKING PLANTETARY PINIONS

Joseph S. VanSelous, Highland; Judith F. Haggerty, Novi, and Kevin E. Norris, Farmington Hills, all of Mich., assignors to Ford Global Technologies, Inc., Dearborn, Mich.

Filed Jun. 6, 1996, Ser. No. 659,553

Int. Cl.^{6} F16H *57/08*

U.S. Cl. 475—12 **5 Claims**

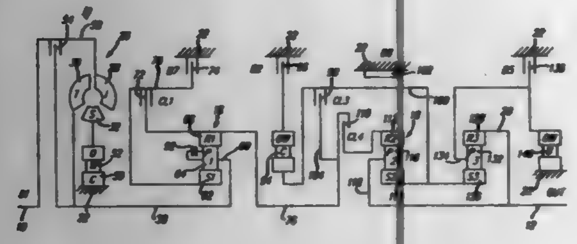

1. In an automatic transmission, a device for controlling a gear unit, comprising:

a planetary gear unit supported on a first axis comprising a sun gear, a ring gear surrounding the sun gear, a carrier, and planet pinions supported for rotation on the carrier, spaced mutually about the axis and continually driveably engaged with the sun gear and ring gear;

an overrunning coupling providing a one-way drive connection between the carrier and a planet pinion;

pinion shafts located at mutually spaced locations on the carrier and fixed to the carrier against displacement and rotation relative thereto, the location of each pinion shaft corresponding to a location of a pinion; a bearing surrounding each pinion shaft, located to support a pinion rotatably on the corresponding pinion shaft;

the carrier is formed with holes directed transversely to said axis at mutually spaced locations on the carrier corresponding to the locations of the pinions; and each pinion shaft has a hole therethrough directed transverse to said axis and aligned with said holes of the carrier, further comprising;

a pin located in mutually aligned holes of the carrier and pinion shaft at each mutually spaced location, whereby the pinion shafts are fixed to the carrier.

5,700,219

VEHICLE POWER TRANSMISSION MECHANISM

Masahiro Ohkubo, Kyoto, Japan, assignor to Exedy Corporation, Osaka, Japan

Filed Jul. 10, 1996, Ser. No. 678,027

Claims priority, application Japan, Jul. 21, 1995, 7-186040

Int. Cl.^{6} F16H *47/08*

U.S. Cl. 475—47 **17 Claims**

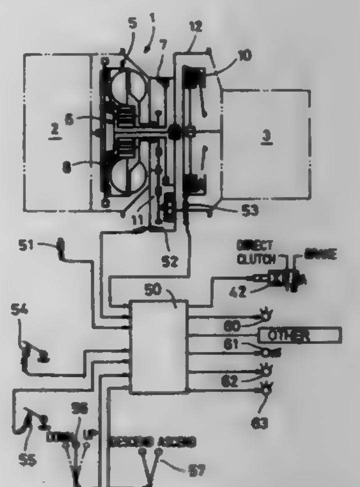

1. A vehicle power transmission mechanism, comprising:

a hydraulic coupling unit having a turbine and an impeller, said impeller configured to transmit torque to said turbine from an engine coupled to said impeller via a hydraulic fluid;

a planetary gear unit connected to said turbine, said planetary gear unit couplable to a transmission, said planetary gear unit configured to decrease an output rotating speed of said turbine and transmit the rotating speed to said transmission, wherein said planetary gear unit comprises:

a ring gear connected to said turbine, a plurality of planetary gears which are meshed with said ring gear radially within said ring gear, a carrier that supports said plurality of planetary gears and is coupled to said transmission, and a sun gear which is meshed with said plurality of planetary gears radially within said plurality of planetary gears; and

a brake unit configured to selectively brake the rotation of said sun gear.

5,700,220

POWER-SHIFTABLE GEAR, ESPECIALLY TWO-SPEED PLANET GEAR

Jürgen Legner, Friedrichshafen, Germany, assignor to ZF Friedrichshafen AG, Friedrichshafen, Germany

PCT No. PCT/EP95/00531, § 371 Date Aug. 1, 1996, § 102(e) Date Aug. 1, 1996, PCT Pub. No. WO95/22705, PCT Pub. Date Aug. 24, 1995

PCT Filed Feb. 14, 1995, Ser. No. 687,356

Claims priority, application Germany, Feb. 19, 1994, 44 05 299.5

Int. Cl.^{6} F16H *61/06*

U.S. Cl. 475—129 **6 Claims**

1. A power-shiftable gear, especially two-speed gear designed as planet gear (3), having at least one friction clutch (9 and 10) the friction components of which (13, 14 and 19, 20) are engaged by spring tension (16, 22) and disengaged by oil pressure, having a line (18 and 24) which leads to a pressure chamber (17 and 23) and

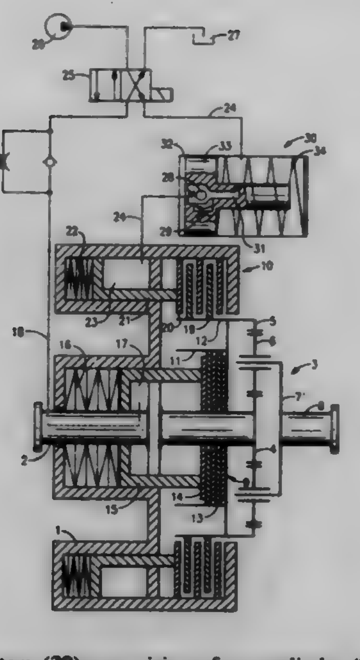

in which is a store (30) comprising of one cylinder (32) and one spring-loaded piston (33) with a non-return valve (28) and a choke (29) in parallel with it.

5,700,221

COOLING STRUCTURE OF AUTOMATIC TRANSMISSION

Muneo Mizuta, Fuji, Japan, assignor to Jatco Corporation, Fuji, Japan

Filed Jul. 23, 1996, Ser. No. 681,427

Claims priority, application Japan, Jul. 24, 1995, 7-186851

Int. Cl.^{6} F16H *45/00;* **F16D** *13/20;13/52;13/64*

U.S. Cl. 475—146 **2 Claims**

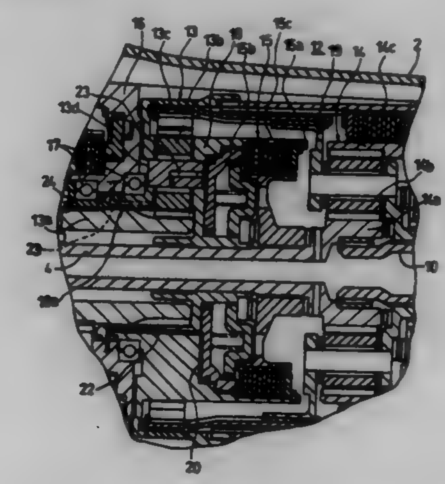

1. A cooling structure of an automatic transmission comprising:

a multiple-plate clutch device disposed between a first planetary gear train and a second planetary gear train, said second planetary gear train being parallelly disposed in a direction of a rotation axis of said first planetary gear train, said multiple-plate clutch device including:

a cylindrical clutch drum;

a clutch piston which slides in said clutch drum in the direction of said rotation axis of said first planetary gear train and forms a piston-operating oil hydraulic chamber between said clutch piston and said clutch drum; and

a plurality of clutch plates which are pressed by said clutch piston and laminated in the direction of said rotation axis;

wherein said clutch drum is formed integrally with a planetary carrier of said first planetary gear train.

5,700,222

FULL-TIME TRANSFER CASE WITH INTEGRATED PLANETARY GEAR ASSEMBLY

Thomas Bowen, Santa Rosa, Calif., assignor to New Venture Gear, Inc., Troy, Mich.

Filed Jun. 19, 1996, Ser. No. 666,191

Int. Cl.^{6} F16H *37/08*

U.S. Cl. 475—204 **17 Claims**

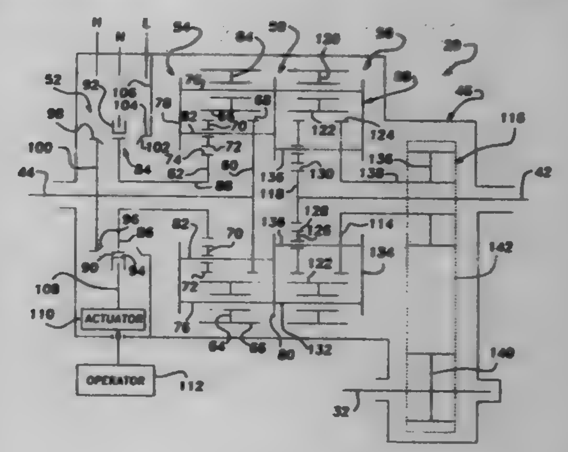

1. A transfer case for use in a four-wheel drive vehicle having a power source and front and rear drivelines, comprising:

a housing;

an input shaft rotatably supported by said housing and driven by the power source;

a front output shaft rotatably supported by said housing and connected to the front driveline;

a rear output shaft rotatably supported in said housing and connected to the rear driveline;

a planetary gear assembly interconnecting said input shaft to said front and rear output shafts for delivering drive torque from the power source to the front and rear drivelines while permitting speed differentiation therebetween, said planetary gear assembly having first and second dual-planetary gearsets sharing a common carrier assembly, said first dual-planetary gearset including a first sun gear fixed for rotation with said input shaft, a second sun gear supported for rotation relative to said input shaft, a first planet gear rotatably supported by said carrier assembly and meshed with said first sun gear, and a second planet gear rotatably supported by said carrier assembly and meshed with said second sun gear and said first planet gear, said second dual-planetary gearset including a third sun gear fixed for rotation with said front output shaft, a fourth sun gear fixed for rotation with said rear output shaft, a third planet gear rotatably supported by said carrier assembly and meshed with said third sun gear, and a fourth planet gear rotatably supported by said carrier assembly and meshed with said fourth sun gear and said third planet gear; and

a clutch apparatus for selectively coupling one of said second sun gear and said carrier assembly to said input shaft for driving said carrier assembly at a direct speed ratio relative to said input shaft for establishing a full-time four-wheel high-range drive mode, and said clutch apparatus is further operable for selectively coupling said second sun gear to said housing for driving said carrier assembly at a reduced speed ratio relative to said input shaft for establishing a full-time four-wheel low-range drive mode.

5,700,223
POWER TRAIN OF FIVE-SPEED AUTOMATIC TRANSMISSION FOR VEHICLE

Seonghyon Park; Jinseong Kim, and Donghoun Park, all of Kyungki-do, Rep. of Korea, assignors to Hyundai Motor Co., Seoul, Rep. of Korea

PCT No. PCT/KR94/00057, § 371 Date Mar. 1, 1996, § 102(e) Date Mar. 1, 1996, PCT Pub. No. WO95/32101, PCT Pub. Date Nov. 30, 1995

PCT Filed May 25, 1995, Ser. No. 592,382

Claims priority, application Rep. of Korea, Dec. 30, 1992, 92-26759; Dec. 30, 1992, 92-26760

Int. Cl.^{6} F16H *3/44*

U.S. Cl. 475—269 **20 Claims**

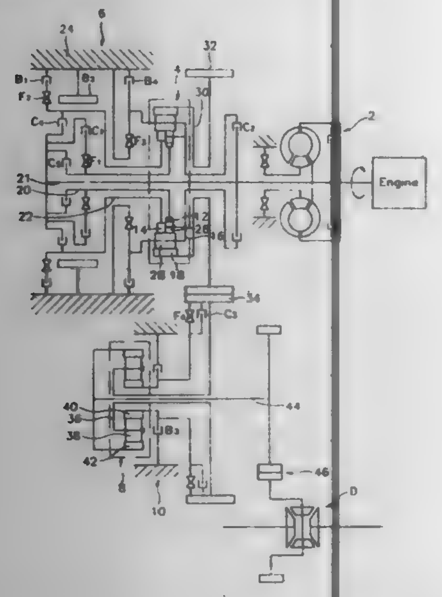

1. A power train for an automatic transmission of a vehicle, comprising:
an input axle for delivering power from an engine;
a main-transmission mechanism selectively operatively connected to the input axle and having a compound planetary gear unit for outputting the power as four speed ratios;
a sub-transmission mechanism operatively connected to the main-transmission mechanism and having a simple planetary gear unit for increasing a speed ratio which is output from the main-transmission mechanism;
the main-transmission mechanism including a first friction element for selectively transmitting the power from the input axle to a first sun gear of the compound planetary gear unit, a second friction element for selectively making a second sun gear of the compound planetary gear unit an idling element, a third friction element for selectively transmitting the power from the input axle to a planetary carrier of the compound planetary gear unit, and a fourth friction element for selectively operating the first sun gear as a reacting force element.

5,700,224
CVT CONTROL SYSTEM FOR VEHICLE DRIVETRAIN

Akito Suzuki, and Tatsuo Ochiai, both of Fujisawa, Japan, assignors to Nissan Motor Co., Ltd., Yokohama, Japan

Filed Jan. 31, 1996, Ser. No. 594,992

Claims priority, application Japan, Feb. 1, 1995, 7-014969

Int. Cl.^{6} B60K *41/04*

U.S. Cl. 477—45 **12 Claims**

1. A CVT control system for a vehicle drivetrain, comprising:
a CVT having an input pulley and an output pulley drivingly connected to the input pulley by a power transmission belt, each of the input and output pulleys having an axially positionable pulley half and an axially stationary pulley half;

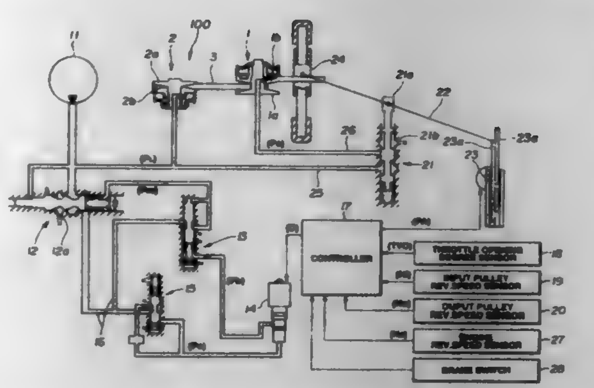

a ratio control unit operable to establish various positions of the axially positionable pulley half of the input pulley relative to the axially stationary pulley half of the input pulley to establish various CVT ratios between the input pulley and the output pulley;
a line pressure control unit having an actuator operable in response to a control signal to establish various line pressure levels applied to the output pulley to create force required for the output pulley to hold the power transmission belt between the axially positionable pulley half of the output pulley and the axially stationary pulley half of the output pulley; and
a controller for developing the control signal in response to an operator brake demand for deceleration of the output pulley, wherein the controller:
develops various desired line pressure levels in response to the presence of the operator brake demand,
develops the control signal in a manner determined as a function of the desired line pressure levels, and
applies the control signal to the line pressure control to adjust an actual line pressure toward the desired line pressure level.

5,700,225
METHOD AND APPARATUS FOR CONTROLLING THE TRANSMISSION RATIO OF A CONTINUOUSLY VARIABLE TRANSMISSION

Wilhelmus Cornelus Waltherus Maria Roovers, Prinsenbeek, and Chi Chung Choi, Eindhoven, both of Netherlands, assignors to Van Doorne's Transmissie B.V., Tilburg, Netherlands

Filed Aug. 15, 1995, Ser. No. 515,531

Claims priority, application Netherlands, Oct. 21, 1994, 9401747

Int. Cl.^{6} B60K *41/12*

U.S. Cl. 477—46 **11 Claims**

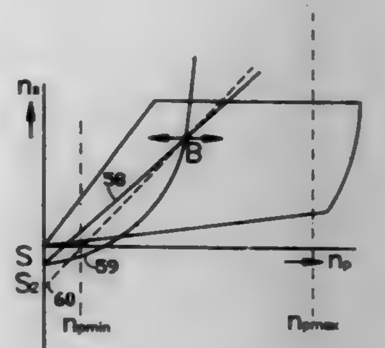

1. A method for controlling a transmission ratio (input speed/output speed) of a continuously variable transmission in a vehicle, said method setting said transmission ratio from a first operational

state to a second operational state as a result of energization by an activation signal, said second operational state causing said transmission ratio to increase when an output speed of said transmission decreases and to decrease when said output speed of said transmission increases, comprising the steps of:
controlling said transmission ratio in said second operational state using a control line, which intersects a point determined by an instantaneous input speed and an instantaneous output speed of said transmission at an instant of commencement of said second operational state and intersects a starting point determined by an input speed equal to zero and said output speed notionally less than zero, at least one of said control line and said starting point being variable and being determined as a function of at least one of a nature and a magnitude of said activation signal.

5,700,226
HYDRAULIC LUBRICATION CONTROL SYSTEM FOR AN AUTOMATIC TRANSMISSION

Timothy A. Droste, Howell, Mich., assignor to Ford Global Technologies, Inc., Dearborn, Mich.

Filed Feb. 20, 1996, Ser. No. 602,533

Int. Cl.^{6} F16H *47/00*

U.S. Cl. 477—156 **10 Claims**

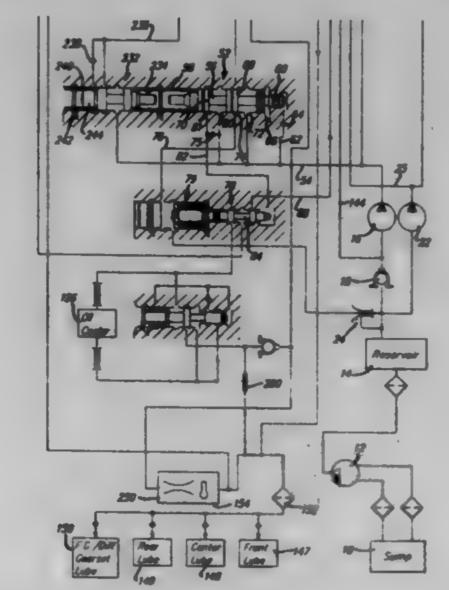

1. A system for supplying hydraulic fluid to a lubrication circuit of a multiple-speed ratio transmission, comprising:
a source of fluid at regulated pressure;
a first orifice located between the fluid source and lubrication system, producing a pressure difference thereacross due to flow through the orifice;
flow control valve means having an outlet port, for alternately opening and closing a connection between the fluid source and a first side of the first orifice in response to the magnitude of said pressure difference;
valve means responsive to the current speed ratio of the transmission for alternately opening and closing a connection between said outlet port and a second side of the first orifice between the first orifice and lubrication circuit.

5,700,227
AUTOMATIC CLUTCH CONTROL

Franz Kosik, Ostfildern, and Günter Wömer, Kernen, both of Germany, assignors to Mercedes-Benz AG, Stuttgart, Germany

Filed Aug. 19, 1996, Ser. No. 699,667

Claims priority, application Germany, Aug. 21, 1995, 195 30 612.0

Int. Cl.^{6} B60K *41/24*

U.S. Cl. 477—171 **5 Claims**

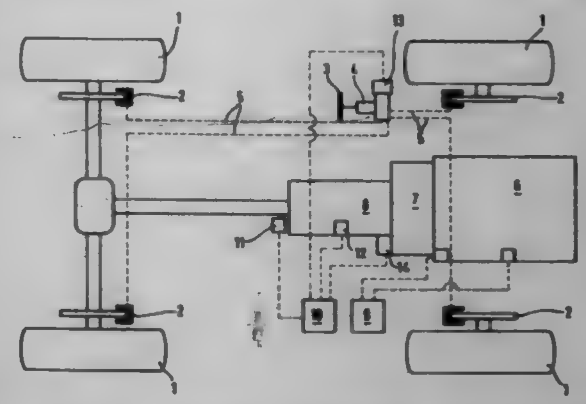

1. A method of operating an automatic clutch arranged between a motor, especially an internal combustion engine, and a drive train of vehicle during creeping phases of said vehicle such as vehicle starts or during transition periods between low speeds and stops, said vehicle having a brake system, a clutch control unit for controlling said clutch, sensor means for determining the vehicle speed and sensor means for determining actuation of said brake system, wherein, below a threshold value of said vehicle speed and at low engine speed, said clutch is controlled so as to transmit only a limited torque to said drive train and, with an actuation of said brake system of the vehicle, said clutch is controlled dependent on signals provided by said sensor means for determining the vehicle speed and by said means for determining actuation of said brake system, such that the torque transmitted to the drive train decreases with increasing effectiveness of said brake system.

5,700,228
GYROCYCLE

Miro James, 4503 Kinmount Rd., Lanham, Md. 20706

Filed Nov. 6, 1995, Ser. No. 553,858

Int. Cl.^{6} A63B *22/12;* **B62M** *1/06*

U.S. Cl. 482—62 **23 Claims**

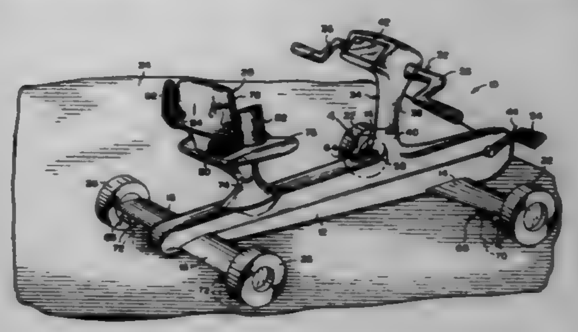

1. A gyrocycle comprising:
a) an elongated main body;
b) a pair of front wings extending from said main body;
c) a pair of rear wings extending from said main body;
d) a front axle extending transversely through said main body and through said front wings;
e) a rear axle extending transversely through said main body and through said rear wings;

f) a pair of front wheels, in which each said front wheel is mounted in a rotatable manner to one end of said front axle, so that said front wheels can rest upon a flat horizontal surface;
g) a pair of rear wheels, in which each said rear wheel is mounted in a rotatable manner to one end of said rear axle, so that said front wheels can rest upon the flat horizontal surface;
h) a chair mounted onto said main body adjacent said rear wings, so that a person can sit in said chair;
i) means built into said main body for exercising, so that the person sitting in said chair can strengthen the triceps, biceps and abdominal muscles; and
j) means for elevating said front wheels and said rear wheels off of the flat horizontal surface, so as to keep said main body in a stationary position upon the flat horizontal surface, said elevating means including:
  i) a pair of front folding braces, in which each said front folding brace is pivotally mounted to the underside of One said front wing adjacent one said front wheel, so that when said front folding braces are folded down, said front wheels will be lifted up off of the flat horizontal surface; and
  ii) a pair of rear folding braces, in which each said rear folding brace is pivotally mounted to the underside of one said rear wing adjacent one said rear wheel, so that when said rear folding braces are folded down said rear wheels will be lifted up off of the flat horizontal surface.

5,700,229
MARTIAL ARTS TARGET
Glenn Karnofsky, P.O. Box 667, Carnelian Bay, Calif. 96140
Filed Mar. 4, 1996, Ser. No. 607,992
Int. Cl.[6] A63B *21/00*
U.S. Cl. 482—83 **7 Claims**

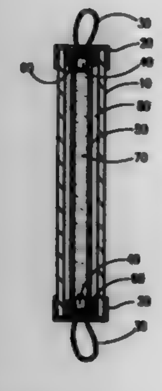

1. A martial arts target comprising:
an outer tube having a length and having two ends;
an inner tube having a length and having two ends which is inserted inside the outer tube; wherein a gap exit between an outer diameter of the inner tube and an inner diameter of the outer tube substantially along the length of the inner and outer tube;
a quantity of granular substance located inside of the inner tube which occupies essentially the entire volume of the inner tube;
an inner tube cap member attached to each of the respective ends of the inner tube;
an outer tube cap member attached to each end of the outer tube, thereby covering the inner tube and the inner tube caps and;
looped attaching means attached to and protruding through at least one of the inner tube caps and at least one of the outer tube caps on each end of the target.

5,700,230
MARTIAL ARTS TRAINING DEVICE
Alfred M. Cardona, 3 Crugers Rd., Montrose, N.Y. 10548
Filed May 20, 1996, Ser. No. 650,878
Int. Cl.[6] A63B *21/00*
U.S. Cl. 482—83 **16 Claims**

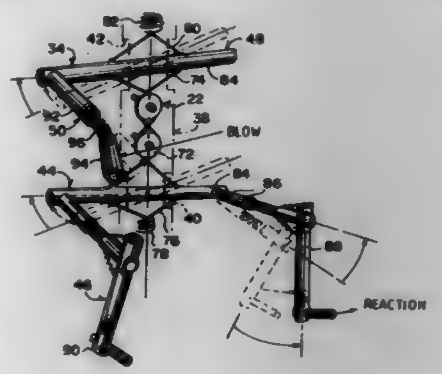

1. A martial arts training device which comprises:
a) a movable mannequin having a human appearance;
b) means for supporting said mannequin in a generally upright position from a floor, said supporting means including:
  i) a base adapted to rest upon the floor;
  ii) a stanchion extending between said base and a bottom end of a torso of said mannequin, whereby said mannequin can rotate about on said stanchion; and
  iii) means for rocking a bottom end of said stanchion with said mannequin back and forth upon Said base in any direction, when said mannequin receives a blow from the martial artist; and
c) means within said mannequin, for showing a reaction movement of a portion of said mannequin, when another portion of said mannequin receives a blow thereto from a martial artist.

5,700,231
WEIGHT LOSS GARMENT
William T. Wilkinson, P.O. Box 73, Salem, N.J. 08079
Filed Apr. 4, 1996, Ser. No. 627,426
Int. Cl.[6] A63B *21/02*
U.S. Cl. 482—124 **19 Claims**

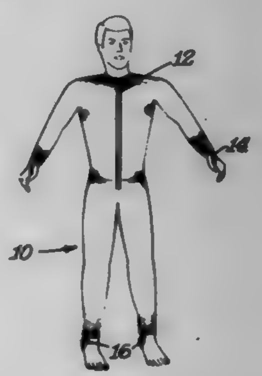

1. A process for creating conditions for burning calories comprising placing on a user a resistance garment having elongated elastic resistance elements which offer resistance to the movement of portions of a user's body, the elongated elements having resistance characteristics which differ from other portions of the garment, placing outer clothing on the user over the resistance garment, the user performing physical activities while wearing the clothing and the resistance garment wherein the physical activities include movement of at least some portion of the body having the resistance garment thereon, the resistance elements providing resistance to the movement during the physical activities to tend to burn

calories in excess of the calories that are burned during the same physical activities when only the clothing is worn, wearing the clothing and resistance garment continuously for an extended period of time, and the elongated resistance elements being located longitudinally on the arm portions of the garment and being anchored to hand stirrups.

5,700,232
EXERCISE APPARATUS
Anthony Robin Clausen, 7 Klip Street, Observatory, Johannesburg, and Albert Norman Wesson, Germiston, both of South Africa, assignors to Anthony Robin Clausen, Johannesburg, South Africa
PCT No. PCT/GB95/01178, § 371 Date Nov. 22, 1996, § 102(e) Date Nov. 22, 1996, PCT Pub. No. WO95/32027, PCT Pub. Date Nov. 30, 1995
PCT Filed May 23, 1995, Ser. No. 737,915
Claims priority, application South Africa, May 23, 1994, 94/0655; Apr. 4, 1995, 95/2738
Int. Cl.[6] A63B *21/02*
U.S. Cl. 482—125 **14 Claims**

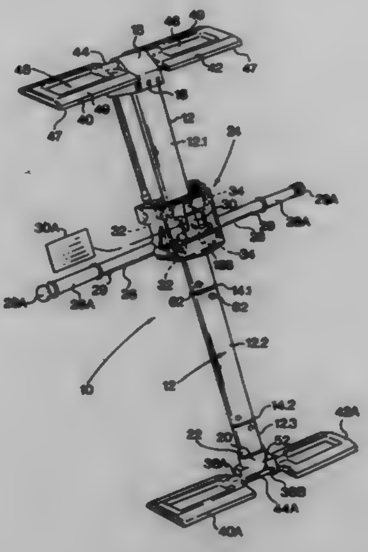

1. An exercise apparatus comprising an elongate spacer element having first and second ends, guide means extending along the length of the spacer element, a carriage mounted slidably to the spacer element for movement between the first and second ends along the guide means, at least one handlebar supported on the carriage, resistance means for applying a resistive force against movement of the carriage as it is displaced long the spacer element in a first direction, the resistance means comprising a plurality of elastic resistance elements extending between the carriage and a fixture on the spacer element, varying means for varying the resistance of the resistive force, and anchoring means mountable to either of the first and second ends for enabling either a pushing or a pulling force to be applied to the handlebar against the variable resistive force when moving the carriage in the first direction characterised in that selector means are mounted on the carriage for selectively engaging with or disengaging from the carriage a preselected number of resistance elements, the anchoring means include at least one footrest extending transversely relative to the spacer element from whichever of the first and second ends is selected, and the footrest or footrests define a pivot axis and are arranged to provide a temporary anchoring support against movement of the handlebar when the feet of a user are positioned over the footrest or footrests, so as to allow the elongate spacer element to pivot in a substantially vertical plane about the pivot axis at its first or second ends, as the handlebar is moved in the first direction against the variable resistive force.

5,700,233
SLEEVELESS CANTILEVER DRIVE FOR HIGH TORQUE APPLICATIONS
Mario Fabris, 188 North Service Road, Grimsby, Ontario, Canada, L3M 4E8
Filed Nov. 27, 1995, Ser. No. 562,743
Int. Cl.[6] B21B *27/03*
U.S. Cl. 492—1 **10 Claims**

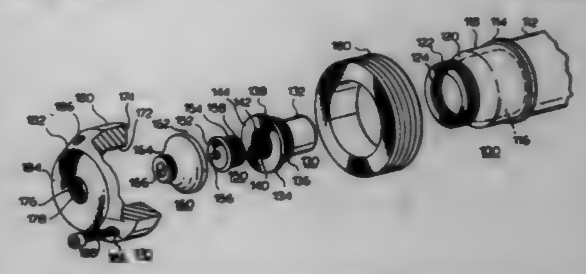

1. A cantilevered drive shaft for a rolling mill comprising a shaft having suitable means to drive said shaft about its axis from one end thereof,
said shaft being mounted in suitable bearings for rotation therein,
said shaft housing a hollow closed cylinder in the end of said shaft opposite said drive means,
said closed cylinder having walls of a predetermined thickness,
said shaft having an exterior raised abutment adjacent one end of said cylinder,
said shaft having access means in the end thereof for communication with said closed cylinder housed in the end of said shaft,
shaft expanding means housed in said cylinder.

5,700,234
MAGNETIC THERAPEUTIC APPARATUS
Isamu Masuda, Fukuoka, Japan, assignor to Nihon Kenko Zoushin Kenkyukai Corporation, Fukuoka, Japan
PCT No. PCT/JP94/00183, § 371 Date Aug. 30, 1995, § 102(e) Date Aug. 30, 1995, PCT Pub. No. WO95/20994, PCT Pub. Date Aug. 10, 1995
PCT Filed Feb. 7, 1994, Ser. No. 505,358
Int. Cl.[6] A61N *1/00*
U.S. Cl. 600—15 **2 Claims**

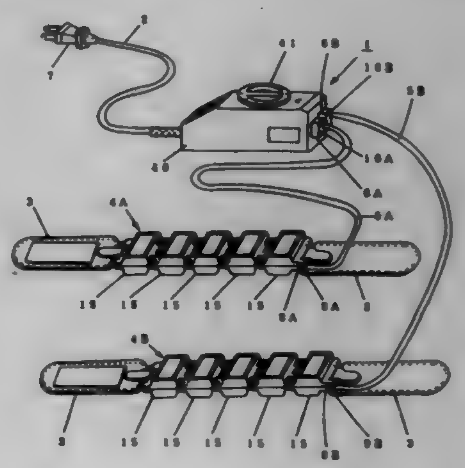

1. A magnetic therapeutic apparatus comprising:
a plurality of magnetic therapeutic units each including one or more electromagnetic solenoids for generating magnetic fields:
a timer unit for applying power to said plurality of magnetic therapeutic units during a selectable time period:
each of said plurality of magnetic therapeutic units having an electric cord with a plug at a distal end thereof for connection

to said timer unit: and said timer unit having a plurality of sockets for accepting the plugs of the magnetic therapeutic units.

5,700,235

Patent Not Issued For This Number

5,700,236

ENDOSCOPE ATTACHMENT FOR CHANGING ANGLE OF VIEW

Jude S. Sauer, Pittsford; Roger J. Greenwald, Holley; Michael G. Oravecz, Rochester, and Alex Kobilansky, Pittsford, all of N.Y., assignors to United States Surgical Corporation, Norwalk, Conn.

Division of Ser. No. 488,268, Jun. 7, 1995, Pat. No. 5,584,793, which is a division of Ser. No. 134,536, Oct. 8, 1993, Pat. No. 5,573,493. This application Jul. 29, 1996, Ser. No. 681,743

Int. Cl.^{6} A61B *1/06*

U.S. Cl. 600—175 **7 Claims**

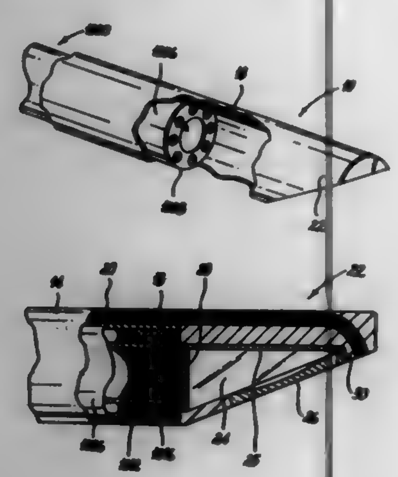

1. An attachment for changing the angle of view of an endoscope, the endoscope including a proximal end and a distal end and having an imaging portion and an illumination portion, the imaging and illumination portions each having a defined angle of view, the attachment comprising:
a support member including a proximal end portion and a distal end portion, the distal end portion configured to be positioned adjacent the distal end of the endoscope;
an integral illumination system associated with the support member and independent of the illumination portion of the endoscope for transferring illuminating light in a longitudinal direction from the proximal end portion of the support member to the distal end portion of the support member;
first means for changing the angle of view of the imaging portion of the endoscope to provide an oblique angle of view, the first means comprising a prism;
second means for directing the illuminating light transferred by the illumination system into alignment with the inclined angle of view of the imaging portion, the second means selected from the group consisting of a prism, a mirror, a curved fiber and a light guide; and
the first and second means being disposed within the distal end portion of the support member, and the first means being aligned with the imaging portion of the endoscope.

5,700,237

DEVICE FOR CORRECTING ANKLE CONTRACTURES

Clarence E. Hess, Safety Harbor, Fla., assignor to Restorative Care of America Incorporated, Clearwater, Fla.

Continuation of Ser. No. 209,242, Mar. 14, 1994, abandoned. This application Nov. 16, 1995, Ser. No. 558,199

Int. Cl.^{6} A61F *5/00*

U.S. Cl. 602—27 **30 Claims**

1. A therapeutic leg and foot device, comprising:
a two-piece substantially L-shaped member including a leg portion and a foot portion;
the leg portion having upper and lower ends and opposite sides with a pair of tabs extending forwardly from the respective sides;
the foot portion having forward and rearward ends and opposite sides with a pair of tabs extending upwardly from the respective sides;
the tabs on each side of the foot and leg portions being in overlapping orientation to one another;
a pin extending through the overlapped tabs on each side of the foot and leg portions so as to define a pivot axis about which the foot and leg portions are pivotal and an adjustable angle between the foot and leg portions;
an anklet attached to the foot and leg portions and being adapted to receive a patient's foot and lower leg and retain the foot and lower leg in position relative to the foot and leg portions; and
tension members operatively extending between the foot and leg portions to limit the angle therebetween.

5,700,238

DEVICE AND METHOD FOR TREATMENT OF HEADACHE

Morton Isaac Hyson, 2020 Goldring #402, Las Vegas, Nev. 89106

Filed Jul. 25, 1996, Ser. No. 686,019

Int. Cl.^{6} A61F *13/12;* **A61M** *35/00*

U.S. Cl. 602—74 **11 Claims**

1. A device to be disposed about the head and over the eyes,

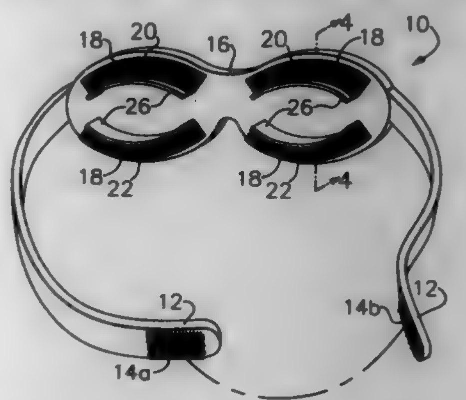

supraorbital and infraorbital areas and nose bridge for treating human ailments comprising:

a wrap adapted to be disposed around the head, said wrap including an opaque, flexible segment adapted to be positioned to substantially overlay the eyes, bridge of the nose, the supraorbital region and infraorbital region;
means for tightening and securing the wrap about the head with said segment in said position;
a pair of absorbent first regions secured to said segment to project therefrom and each located, when the wrap is secured to the head, to contact said areas proximate the supraorbital region over each eye, each region adapted to be loaded with a medicament, tightening of the wrap causing said regions to exert pressure on and dispense medicament to treat the contacted area; and
a barrier raised from the segment and located proximate the margin of each first region nearest the eyes, each barrier adapted to seal against the skin to resist medicament dispensed from the first region from contacting the eyes.

5,700,239

MULTIFUNCTIONAL DEVICES FOR USE IN ENDOSCOPIC SURGICAL PROCEDURES AND METHOD THEREFOR

InBae Yoon, 2101 Highland Ridge Dr., Phoenix, Md. 21131

Continuation of Ser. No. 487,215, Jun. 7, 1995, abandoned, which is a continuation of Ser. No. 130,484, Oct. 1, 1993, Pat. No. 5,484,426, which is a division of Ser. No. 600,775, Oct. 23, 1990, Pat. No. 5,374,261, which is a continuation-in-part of Ser. No. 556,081, Jul. 24, 1990, Pat. No. 5,074,840. This application Jun. 5, 1996, Ser. No. 659,784

Int. Cl.^{6} A61M *35/00*

U.S. Cl. 604—2 **9 Claims**

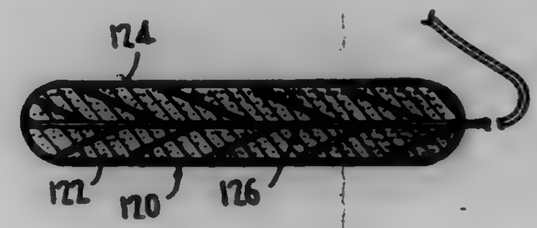

1. A multifunctional device for use in an endoscopically performed procedure of the type where a narrow portal in a body is utilized to access an internal operative site in the body and the device is introduced to the operative site through the narrow portal, said device comprising a length of absorbent material capable of expanding upon absorbing body fluids, said absorbent material having a rigid dry state prior to introduction at the operative site and an expanded, soft wet state after absorbing body fluids at the operative site, a tubular spine extending through said absorbent material, a tubular connector having a distal end connected to said spine and a proximal end for being disposed externally of the body and a medicament for being supplied to said absorbent material through said spine, from externally of the body, after said absorbent material has been introduced at the operative site, said spine having a predetermined non-straight configuration, being maintained in a straight configuration by said absorbent material in said rigid dry state and returning to said predetermined non-straight configuration when said absorbent material is in said soft wet state.

5,700,240

PHACOEMULSIFICATION SYSTEM HAVING ULTRASONIC POWER CONTROLLED BY ASPIRATION VACUUM SENSOR

Billie John Barwick, Jr., 85 Hull St., Beverly, Mass. 01915, and James H. Little, 6601 S. Country Club Dr., Oklahoma City, Okla. 73159

Continuation-in-part of Ser. No. 188,188, Jan. 28, 1994, abandoned. This application Jan. 24, 1995, Ser. No. 378,533

Int. Cl.^{6} A61B *17/20*

U.S. Cl. 604—22 **8 Claims**

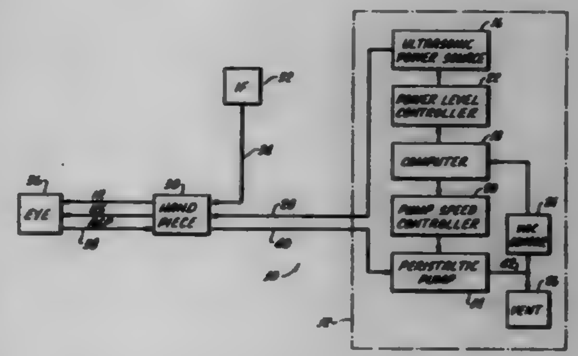

5. Phacoemulsification apparatus which comprises:
a phacoemulsification handpiece;
means for providing irrigation fluid to the handpiece;
a variable speed pump connected in fluid communication with said handpiece for aspirating, by vacuum, irrigation fluid from said handpiece;
a power source connected for providing ultrasonic power to said handpiece;
a sensor connected in fluid communication with said handpiece for sending vacuum levels in said handpiece; an
a control unit, responsive to the sensed vacuum levels in said handpiece, for varying the ultrasonic power level provided to said handpiece by said power source.

5,700,241

CROSS-SECTIONAL TISSUE TEXTURED SURFACES

Steven L. Goodman, Madison, Wis., assignor to Wisconsin Alumni Foundation, Madison, Wis.

Filed Apr. 4, 1996, Ser. No. 628,591

Int. Cl.^{6} A61M *11/00*

U.S. Cl. 604—93 **13 Claims**

1. A percutaneous access device of a type suitable to be inserted through human skin, the device comprising a housing having (a) a through bore, and (b) a peripheral outer surface that essentially replicates a portion of a transverse mammalian epithelial surface.

5,700,242
BALLOON CATHETER AND METHOD FOR FACILITATING INCREASED RADIAL EXPANSION
Hugo Mulder, Groningen, Netherlands, assignor to Cordis Corporation, Miami Lakes, Fla.
Filed Nov. 22, 1995, Ser. No. 562,307
Claims priority, application Netherlands, Nov. 22, 1994, 9401951
Int. Cl.[6] A61M *29/00*
U.S. Cl. 604—96 14 Claims

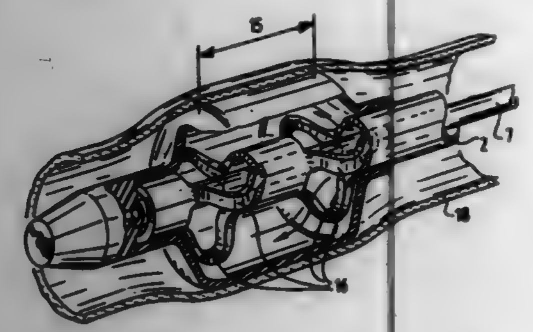

1. A balloon catheter for use by a health care professional in performing a medical procedure, comprising:
a tubular shaft having proximal and distal ends and defining an inflation lumen;
a substantially inelastic balloon having an initial length and being disposed near said tubular shaft distal end;
wherein said inflation lumen is in fluid communication with the interior of said balloon to conduct a pressurized fluid into the interior of said balloon to inflate said balloon;
wherein said tubular shaft defines at least two elongated openings disposed on said shaft member within said balloon, whereby said openings define at least a first and second strip member adapted to collapse and bow outwardly and to longitudinally shorten said shaft member during inflation of said balloon; and
wherein said balloon is adapted to expand to a first inflated profile while said balloon is said initial length, and is adapted to longitudinally shorten upon inflation, thereby allowing a portion of said balloon to radially expand wider said first inflated profile.

5,700,243
BALLOON PERFUSION CATHETER
Hugh L. Narciso, Jr., Santa Barbara, Calif., assignor to PDT Systems, Inc., Santa Barbara, Calif.
Continuation of Ser. No. 378,392, Jan. 26, 1995, abandoned, which is a continuation of Ser. No. 145,292, Oct. 29, 1993, abandoned, which is a continuation of Ser. No. 969,106, Oct. 30, 1992, abandoned. This application May 24, 1996, Ser. No. 653,461
Int. Cl.[6] A61M *29/00*
U.S. Cl. 604—102 2 Claims

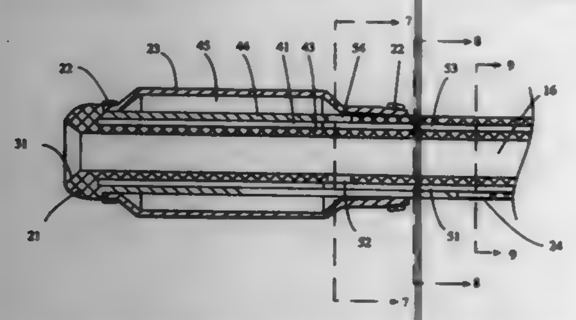

1. An intravascular balloon catheter operable for administering a dosage of diffuse therapeutic light to uniformly illuminate the inner surface of a cylindrical portion of a blood vessel without interrupting the flow of blood through the blood vessel, said balloon catheter comprising:
(a) a flexible elongate catheter body having a non-invasive proximal portion, a non-shadowing invasive distal portion terminating distally in a tip opening and a central lumen terminating at said tip opening, said catheter body being made from an outer sheath, a portion of which is optically transparent at said invasive distal portion, and an inner sheath disposed coaxially within said outer sheath; said catheter body further having an optically transparent inflatable balloon concentrically overlying said optically transparent portion of said outer sheath and affixed to said outer sheath to form a fluid-tight connection therewith, said balloon comprising an inflatable optically transparent outer shell enclosing an inner chamber;
(b) a cylindrical light diffuser element disposed between said optically transparent portion of said outer sheath and said inner sheath under said balloon, said cylindrical light diffuser element having a proximal end adapted to receive light, said light diffuser element providing means operable for delivering treatment light to uniformly illuminate a circumferential portion of a blood vessel adjacent to and encircling said outer shell of said balloon;
(c) multiple channels located between said inner and outer sheaths, said multiple channels extending from said proximal portion to said cylindrical light diffuser element, each of said channels being separate from each other and parallel to said central lumen, one of said channels being an inflation lumen in fluid communication with said inner chamber of said balloon for conducting the flow of an optically transparent fluid inflation medium therethrough;
(d) an inflation fluid injection port mounted on said exterior surface of said non-invasive portion of said catheter body, said fluid injection port operable for introducing an optically transparent inflation medium into said inflation lumen;
(e) a fiber optic array disposed within another one of said multiple channels, said fiber optic array having a proximal end adapted to receive treatment light from a light source, and a distal end operatively connected to said cylindrical light diffuser element, said fiber optic array operable for conducting treatment light from said proximal end to said diffuser element;
(f) a first opening in said outer sheath of said invasive distal end of said catheter body proximal to said balloon and a second opening in said inner sheath proximal to said diffuser element, said first and second openings being in fluid communication with one of said multiple channels, said second opening further in fluid communication with said central lumen, said openings and said multiple channel forming a perfusion channel providing fluid communication between the exterior of said catheter body and said central lumen operable for continued blood flow through a blood vessel during treatment even though the blood vessel may be occluded by said balloon when said balloon is inflated.

5,700,244
FLUID DISPENSER WITH FILL ADAPTER
Marshall S. Kriesel, Saint Paul, Minn., assignor to Science Incorporated, Bloomington, Minn.
Continuation-in-part of Ser. No. 192,031, Feb. 3, 1994, Pat. No. 5,484,415, which is a continuation-in-part of Ser. No. 156,685, Nov. 22, 1993, Pat. No. 5,433,709, which is a continuation-in-part of Ser. No. 53,723, Apr. 26, 1993, Pat. No. 5,354,278, which is a continuation-in-part of Ser. No. 870,521, Apr. 17, 1992, Pat. No. 5,263,940. This application Dec. 22, 1995, Ser. No. 577,496
Int. Cl.[6] A61M *37/00*
U.S. Cl. 604—132 15 Claims

1. A fluid delivery apparatus comprising:
(a) a fluid delivery assembly comprising:

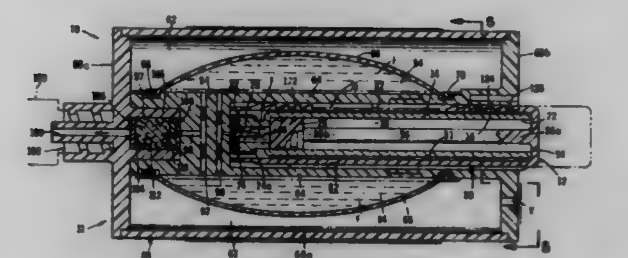

(i) an elongated housing having walls defining an internal chamber, one of said walls having an outlet passageway;
(ii) a support assembly connected to said housing, said support assembly including:
a. an elongated body portion having a receiving chamber and an end wall portion having first and second fluid passageways each having an open end; and
b. a hollow cannula connected to said end wall portion and extending into said receiving chamber, said hollow cannula being in communication with said first fluid passageway formed in said end wall portion of said elongated body; and
(iii) an elongated tubular shaped elastomeric member connected proximate its ends to said support, said elastomeric member having a central portion disposed within said internal chamber of said housing and overlaying said open ends of said first and second fluid passageways, said central portion of said elastomeric member being distendable by fluid flowing through said first fluid passageway from a first position in proximity with said support to a second position; and
(b) a fill assembly interconnected with said fluid delivery assembly comprising:
(i) a container assembly including:
a. a container having a body portion, a fluid chamber, and first and second open ends;
b. closure means for sealably closing said first end of said container, said closure means being pierceable by said hollow cannula;
c. a plunger telescopically movable within said container from a first location proximate said open end to a second spaced apart location to cause fluid flow into said hollow cannula;
(ii) an adapter assembly receivable within said receiving chamber of said support assembly, said adapter assembly comprising a hollow housing having a first open end for telescopically receiving a part of said body portion of said container of said container assembly and including a second end.

5,700,245
APPARATUS FOR THE GENERATION OF GAS PRESSURE FOR CONTROLLED FLUID DELIVERY
Gregory E. Sancoff, Windham, N.H.; Mark C. Doyle, San Diego, and Frederic P. Field, Solana Beach, both of Calif., assignors to Winfield Medical, San Diego, Calif.
Filed Jul. 13, 1995, Ser. No. 501,948
Int. Cl.[6] A61M *37/00*
U.S. Cl. 604—145 43 Claims

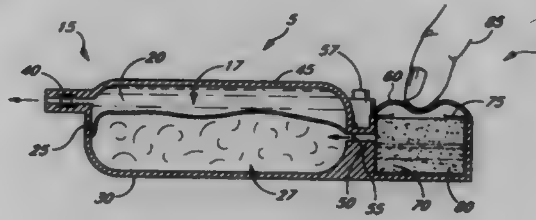

1. An apparatus for delivering a fluid, comprising:
a first compartment containing said fluid and having a fluid delivery outlet;
a second compartment in pressure-transferring communication with said first compartment such that gas pressure in said second compartment serves to pressurize said fluid in said first compartment;
a third compartment initially separately containing a solid and a liquid reactant, wherein said liquid reactant and said solid reactant generate a gas when combined together;
a wicking material adapted to carry said liquid reactant into contact with said solid reactant, wherein a first portion of said wicking material is in contact with said solid reactant and a second portion is adapted to contact said liquid reactant;
an openable barrier interposed between said wicking material and said liquid reactant such that upon opening said barrier, said liquid reactant contacts said second portion of wicking material, which in turn carries said liquid reactant into contact with said solid reactant, whereupon a gas is generated, pressurizing said fluid to deliver said fluid out of said outlet.

5,700,246
HOLDER FOR CARTRIDGE-NEEDLE UNIT
Mark A. Stiehl, Rochester; William A. Bergstresser, Prattsburgh, both of N.Y., and John J. Niedospial, Princeton Junction, N.J., assignors to Abbott Laboratories, Abbott Park, Ill.
Continuation of Ser. No. 610,511, Mar. 4, 1996, Pat. No. 5,573,514, which is a continuation of Ser. No. 128,934, Sep. 29, 1993, abandoned. This application Sep. 26, 1996, Ser. No. [illegible]
Int. Cl.[6] A61M *5/32*
U.S. Cl. 604—198 3 Claims

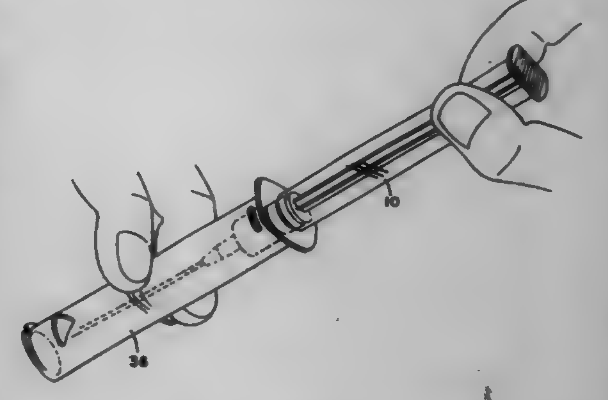

1. A holder for use in combination with a pre-filled cartridge-needle unit having a circumferential ring, said holder comprising:
a hollow body sized for housing the cartridge-needle unit therein having proximal and distal ends, said body comprising a pair of squeeze pads disposed on the distal end thereof; and
means for permitting the body to move axially relative to the cartridge-needle unit between use and safe positions;
the improvement wherein said body comprises a pair of cam slots at the distal end thereof and a pair of retaining slots at the proximal end thereof, said slots being sized to accept said circumferential ring and positioned to hold said cartridge-needle unit in use and safe positions
and wherein the distal end of said body is elliptical in cross section, said ellipse having a major axis substantially longer than its minor axis and the proximal end of said body is circular in cross section and said body is tapered from said distal elliptical end to said proximal circular end.

5,700,247
BACKSTOP DEVICE FOR A FLANGELESS SYRINGE
Jean Pierre Grimard, Vif, and Eric Olive, Lyons, both of France, assignors to Becton Dickinson France S.A., Le Pont de Claix, France
Division of Ser. No. 532,444, Sep. 22, 1995, Pat. No. 5,607,399. This application Dec. 18, 1996, Ser. No. 769,014
Int. Cl.⁶ A61M *5/315*
U.S. Cl. 604—220 **7 Claims**

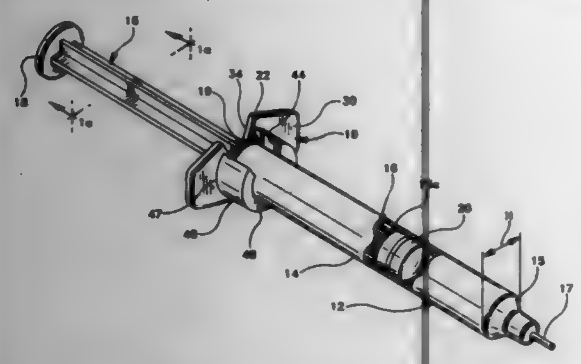

1. A backstop device for preventing inadvertent removal of a stopper or plunger rod from the open proximal end of a flangeless syringe, said flangeless syringe having a barrel adapted to retain said stopper or said plunger rod, said barrel having an outside circumference, an outside diameter, an inside diameter, and an open proximal end, said plunger rod having a minimum width and a maximum width, comprising:
a retaining wall attachable adjacent the open proximal end of said flangeless syringe, said retaining wall having proximal and distal ends and defining an opening having a width not greater than the outside diameter of said syringe barrel;
a finger plate affixed to the proximal end of the retaining wall, said finger plate defining an aperture therethrough in communication with the open proximal end of the flangeless syringe, said aperture having a width at least equal to the maximum width of the plunger rod, and a lead opening communicating with said aperture, said lead opening having a width at least equal to the minimum width of the plunger rod; and
means for securing the retaining wall adjacent the open proximal end of the flangeless syringe.

5,700,248
MEDICAL VALVE WITH TIRE SEAL
George A. Lopez, Laguna Beach, Calif., assignor to ICU Medical, Inc., San Clemente, Calif.
Filed Dec. 15, 1995, Ser. No. 573,964
Int. Cl.⁶ A61M *5/00;5/14*
U.S. Cl. 604—249 **7 Claims**

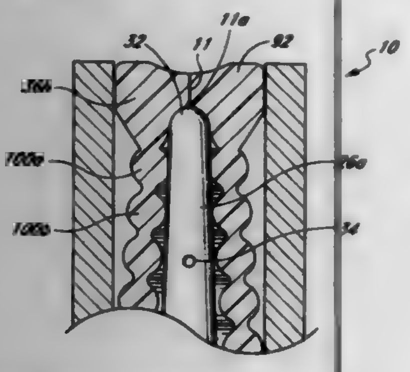

1. A medical valve comprising:
a body including a wall structure defining an internal cavity, said body having a proximal end and a distal end, said proximal end having an opening sufficiently large to receive a tip of a delivery end of a medical implement which transfers fluid through said delivery end;
a spike having a tip contained with said cavity, said spike having at least one hole located distal said tip, and a passageway in communication with the hole that allows fluid to flow through said spike; and
a resilient seal in said cavity surrounding said spike, said seal having at least two tire elements along a length thereof, said seal adapted to be moved into a compressed state upon insertion of the tip of the medical implement into said opening, said seal being sufficiently resilient to return to a decompressed state upon removal of the tip of the medical implement from said opening, said seal having at least two tires in contact with said spike proximal said hole preventing flow of the fluid through said valve when said seal is in a decompressed state.

5,700,249
NEEDLE POINT PROTECTOR
David Howell Jenkins, 1 Langton Place, Charlton Kings, Cheltenham, Gls., United Kingdom, GL51 8HW
PCT No. PCT/GB94/02372, § 371 Date Apr. 9, 1996, § 102(e) Date Apr. 9, 1996, PCT Pub. No. WO95/12426, PCT Pub. Date May 11, 1995
PCT Filed Oct. 31, 1994, Ser. No. 628,619
Claims priority, application United Kingdom, Nov. 4, 1993, 9322786; Jul. 27, 1994, 9415157
Int. Cl.⁶ A61M *5/00*
U.S. Cl. 604—263 **7 Claims**

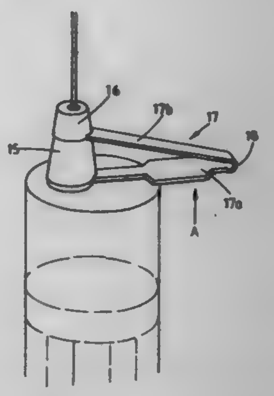

1. A needle point protector comprising a protective element (16) movable along the needle (11) from an inoperative position in which it exposes the pointed end of the needle to an operative position in which it covers the pointed end of the needle, a holder (15) which can be fixed with respect to the needle at a position remote from the pointed end of the needle, and a single elongate arm (17) connecting the protective element to the holder, the protective dement having an internal cavity (22) in which the pointed end of the needle is disposed when in use the protective element is in its operative position and an aperture (23) through which the pointed end of the needle can pass in order to move into said internal cavity as the protective element is moved from its inoperative to its operative position, the single elongate arm having a hinge intermediate (18) its ends and being movable from a folded condition in which the arm extends in use transversely to the longitudinal extent of the needle and in which the protective cap is in its inoperative position to an extended condition in which the protective cap is moved to its operative position by applying manual pressure to the part of the arm between the holder and the hinge, and the elongate arm being connected to the protective cap in such a way that when in use the protective cap is moved to its operative position the angle between the protective cap and the elongate arm changes and stores energy so that when the pointed end of the needle passes into the cavity the protective cap flips into a tilted position as some of the stored energy is released and the aperture is moved out of alignment with the pointed end of the needle.

5,700,250
CATHETER-ADVANCEMENT ACTUATED NEEDLE RETRACTION SYSTEM
Timothy J. Erskine, Sandy, Utah, assignor to Becton Dickinson and Company, Franklin Lakes, N.J.
Continuation of Ser. No. 483,438, Jun. 7, 1995, abandoned, which is a division of Ser. No. 400,150, Mar. 7, 1995, abandoned. This application Oct. 24, 1996, Ser. No. 736,615
Int. Cl.⁶ A61M *5/00*
U.S. Cl. 604—263 **9 Claims**

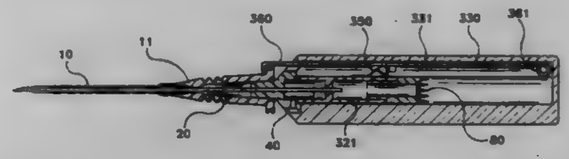

1. A catheter and needle introducer assembly, comprising:
a barrel defining a barrel lumen with an inwardly radially extending shoulder therein, the barrel having a proximal end and a distal end, the distal end defining a distal wall with an opening extending therethrough;
a catheter having a proximal end and a distal end;
a catheter hub affixed to the proximal end of the catheter and located adjacent to the distal end of the barrel;
a needle having a sharp distal tip and a proximal end;
a needle hub having a proximal end and a distal end affixed to the proximal end of the needle, the needle hub being disposed in the barrel lumen such that the sharp distal tip of the needle initially extends distally of the distal wall of the barrel through the opening coaxially within the catheter;
a spring cooperating with the needle hub to urge the needle hub toward the proximal end of the barrel;
a latch mounted to the needle hub and having an abutment at one end to engage the shoulder in the barrel when the needle hub is adjacent the distal end of the barrel; and
a latch actuator movably mounted with respect to the barrel to cooperate with the latch when the latch actuator is moved distally with respect to the barrel to move the latch away from the shoulder to disengage the latch from the shoulder and allow the spring to urge the needle hub toward the proximal end of the barrel.

5,700,251
EPIDURAL CATHETER
Hidekazu Miyauchi, Kusatsu, and Katsuhiro Hiejima, Ootsu, both of Japan, assignors to Nissho Corporation, Osaka, Japan
Filed Dec. 1, 1995, Ser. No. 567,390
Claims priority, application Japan, Dec. 2, 1994, 6-299420
Int. Cl.⁶ A61M *5/00*
U.S. Cl. 604—264 **13 Claims**

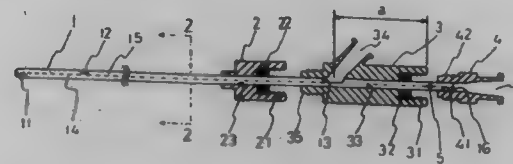

1. An epidural catheter comprising:
a catheter body having a distal end and a proximal end and having formed therein a main lumen and at least one auxiliary lumen, the main lumen and auxiliary lumen extending side by side and in parallel with each other, the main lumen having an outlet opening at the distal end and an inlet opening at the proximal end, the auxiliary lumen having an outlet opening spaced a predetermined distance from the outlet opening in the main lumen and an inlet lateral opening located toward the proximal end;
an adapter detachably disposed on the catheter body, the adapter comprising forward, middle and rearward members that are detachably connected to one another, each member having an axial bore therethrough to tightly receive the catheter body, the rearward member having a first inlet port formed therein and communicating with the inlet opening of the main lumen, the middle member having a second inlet port formed therein and communicating with the inlet opening of the auxiliary lumen; and
seals disposed between the forward and middle members and between the middle and rearward members.

5,700,252
LUMEN-SEEKING NASOGASTRIC TUBE AND METHOD
Ralph James Klingenstein, 151 Tremont St., Apt. 23E., Boston, Mass. 02111
Filed Nov. 1, 1995, Ser. No. 551,453
Int. Cl.⁶ A61M *25/00*
U.S. Cl. 604—280 **23 Claims**

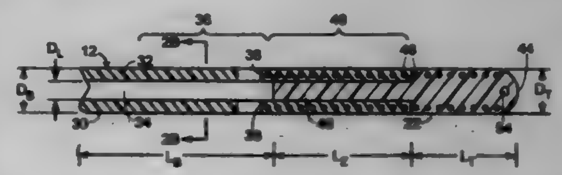

1. A nasogastric tube for insertion into a digestive system of a patient via a nasal cavity comprising:
a flexible tube body configured to provide a first column strength, said tube body comprising:
a sidewall defining a lumen; and
a distal end portion;
a tip coupled to said distal end portion along a transition zone, said tip configured to provide a second column strength, wherein said first column strength is greater than said second column strength so that said tip preferentially buckles before said tube body upon encountering body structure during insertion of said nasogastric tube to provide a lumen seeking function; and
an aperture transecting at least one of said sidewall and said tip, said aperture being in fluid communication with said lumen.

5,700,253
FLEXIBLE, KINK-RESISTANT, INTRODUCER SHEATH AND METHOD OF MANUFACTURE
Fred T. Parker, Bloomington, Ind., assignor to Cook Incorporated, Bloomington, Ind.
Division of Ser. No. 21,398, Feb. 23, 1993, Pat. No. 5,380,304, and a continuation-in-part of Ser. No. 741,689, Aug. 7, 1991, abandoned. This application Jan. 10, 1995, Ser. No. 370,926
Int. Cl.⁶ A61M *25/00*
U.S. Cl. 604—282 **20 Claims**

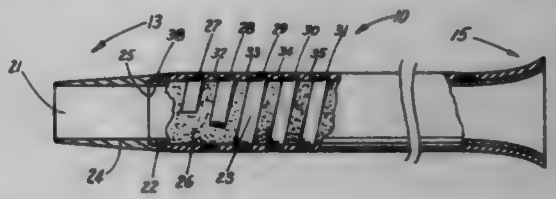

1. The method of manufacturing a flexible, kink-resistant, introducer sheath comprising the steps of:
providing an inner tube having an outer diameter and a passageway extending longitudinally therethrough;
providing a coil having a plurality of turns and an inner diameter less than said outer diameter of said inner tube;

providing an outer tube;
winding said coil around said inner tube;
longitudinally positioning said outer tube around said coil and said inner tube; and
connecting said outer tube to said inner tube through spaces between said turns.

5,700,254
LIQUID DISTRIBUTION LAYER FOR ABSORBENT ARTICLES

Debra Jean McDowall; Lawrence Howell Sawyer, both of Roswell; Robert David Wright, Peachtree City, and Eugenio Varona, Marietta, all of Ga., assignors to Kimberly-Clark Worldwide, Inc., Neenah, Wis.

Division of Ser. No. 220,892, Mar. 31, 1994, abandoned. This application May 22, 1995, Ser. No. 447,338
Int. Cl.⁶ A61F *13/15*
U.S. Cl. 604—378 **6 Claims**

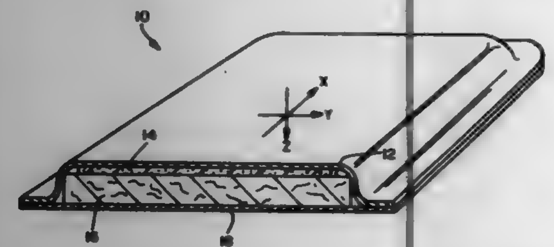

1. A liquid distribution layer for absorbent articles comprising first, second and third sub-layers of nonwoven webs of substantially continuous microfibers,
said microfibers of each of said sub-layers having a fiber alignment ratio of at least about 4:1;
said microfibers comprising a fiber-forming polymer selected from the group consisting of hydrophilically modified polymers and hydrophilic polymers,
wherein said first sub-layer comprises microfibers having a thicker average fiber diameter and a lower fiber alignment ratio than the microfibers of said second sub-layer, and said second sub-layer comprises microfibers having a thicker average fiber diameter and a lower fiber alignment ratio than the microfibers of said third sub-layer.

5,700,255
ABSORBENT ARTICLE HAVING COMPOSITE ELASTICIZED MEMBER

John Joseph Curro; Scot G. Wolf, both of Cincinnati, and Willie King, Wyoming, all of Ohio, assignors to The Procter & Gamble Company, Cincinnati, Ohio

Continuation of Ser. No. 112,014, Aug. 25, 1993, abandoned. This application Nov. 20, 1996, Ser. No. 747,427
Int. Cl.⁶ A61F *13/15*
U.S. Cl. 604—385.2 **19 Claims**

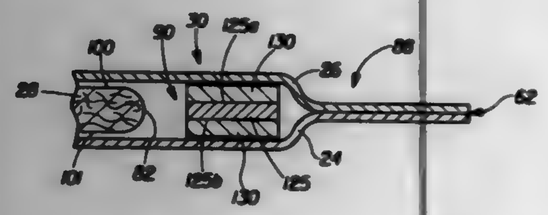

1. A disposable absorbent article, said disposable absorbent article comprising:
(a) a containment assembly including a liquid pervious topsheet, a liquid impervious backsheet joined with said topsheet, and an absorbent core positioned between said topsheet and said backsheet, said absorbent core having side edges and waist edges;
(b) an elasticized side panel extending laterally outward from at least one of said side edges of said absorbent core; and
(c) a composite member extending laterally outward from at least one of said side edges of said absorbent core forming a portion of said elasticized side panel, said composite member including an elastomeric member having a first surface and a second surface and a resilient, three-dimensional, macroscopically expanded, formed-film member secured to said first surface of said elastomeric member, said formed-film member having a first surface and a second surface and exhibiting a multiplicity of apertures formed by a multiplicity of intersecting fiber-like elements interconnected to one another in said first surface of said formed-film member, each of said fiber-like elements having a base portion located in said first surface and side wall portions attached to said base portion and extending generally in the direction of said second surface of said formed-film member, said side wall portions of said fiber-like elements being interconnected to one another intermediate said first and second surfaces of said formed-film member and terminating substantially concurrently with one another in said second surface of said formed film member, said formed film member exhibiting a caliper significantly greater than the thickness of material from which said formed-film member is made and exhibiting a high degree of resiliency, such that said formed-film member imparts a significant degree of stiffness and resilience to said composite member.

5,700,256
DISPOSABLE ABSORBENT PAD

Masamitsu Yamamoto, and Rumi Yamaki, both of Kawanoe, Japan, assignors to Uni-Charm Corporation, Ehime-ken, Japan

Continuation of Ser. No. 321,956, Oct. 12, 1994, abandoned. This application Jul. 8, 1996, Ser. No. 676,995
Claims priority, application Japan, Oct. 13, 1993, 5-255887
Int. Cl.⁶ A61F *13/15;13/20*
U.S. Cl. 604—397 **4 Claims**

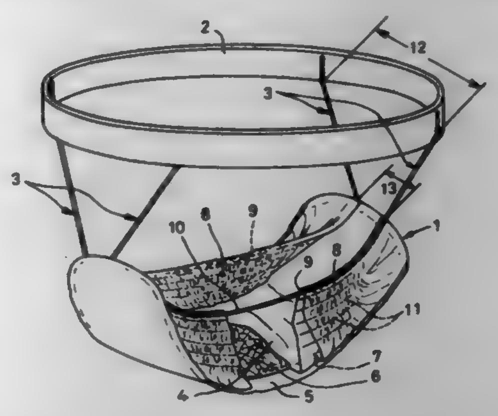

1. A disposable absorbent pad comprising a pad, an annular elastic waist band and two pairs of elastic suspending straps bonded to said waist band, said pad comprising a liquid-permeable topsheet, a liquid-impermeable backsheet and an absorbent core sandwiched between said topsheet and said backsheet, wherein side flaps extend outward from laterally opposite side edges of said core, said side flaps having sleeves at their outer side edges, said sleeves each containing elastic members being longitudinally stretchable, said elastic members extending beyond longitudinally opposite ends of the respective sleeves and these elastic members further defining said pairs of suspending straps, said side flaps are folded inward, and longitudinally opposite ends of said side flaps thus folded inward are fixed to said pad, and wherein a longitudinally front end of said pad is connected to a front side of said waist band by one of said two pairs of suspending straps and a longitudinally rear end of said pad is connected to a rear side of said waist band by the other of said two pairs of suspending straps.

5,700,257
AMBULATORY IV PUMP TRANSPORT APPARATUS

Steven E. Minick, San Diego; Judith A. Segerson, La Jolla, and William C. Rednour, San Diego, all of Calif., assignors to Abbott Laboratories, Abbott Park, Ill.

Filed Dec. 19, 1995, Ser. No. 574,672
Int. Cl.⁶ A61B *19/00*
U.S. Cl. 604—408 **20 Claims**

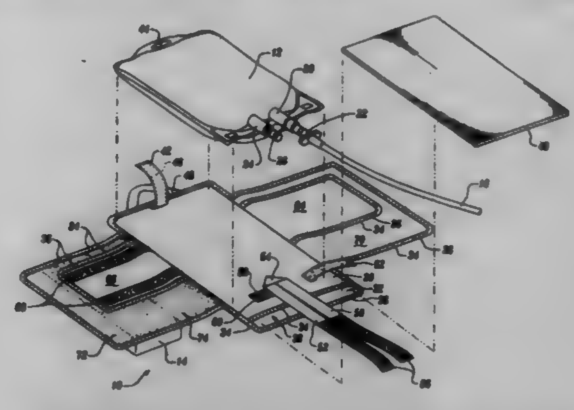

1. A pack for transporting an ambulatory IV pump and an IV bag while a medicinal fluid in the IV bag is infused into a patient by the pump, comprising:
(a) a pack board sized to support the IV bag when one side of the IV bag is in contact with the pack board;
(b) a plurality of flaps and a plurality of straps connected to the pack board, securing the IV bag to the pack board both laterally and transversely; and
(c) a pouch flexibly connected to the pack board and sized to hold the ambulatory IV pump, so that said pump may be coupled to the IV bag while said pump is disposed within said pouch.

5,700,258
COMPLEX COILS HAVING FIBERED CENTERS

Gregory E. Mirigian, Fremont; Nga Thi Van, Santa Clara, and Son M. Gia, San Jose, all of Calif., assignors to Target Therapeutics, Inc., Fremont, Calif.

Continuation-in-part of Ser. No. 265,188, Jun. 24, 1994, Pat. No. 5,549,624. This application Sep. 29, 1995, Ser. No. 540,354
Int. Cl.⁶ A61B *17/00*
U.S. Cl. 606—1 **14 Claims**

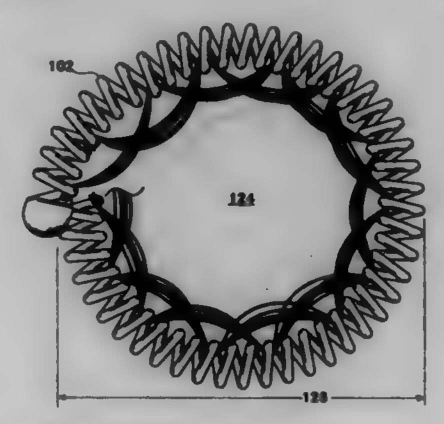

1. A vasoocclusive device comprising:
(a) a coil having helical windings extending between a first end and a second end, a primary coil axis extending between said first end and a second end, and defining a primary coil form, said primary coil form being self-forming into a selected secondary coil form with a secondary coil form interior, and
(b) at least one fibrous element affixed to said coil and located with respect to said primary coil form so that upon said self-forming into said selected secondary coil form, the majority of said at least one fibrous element resides within said secondary coil form interior.

5,700,259
THORACOSCOPIC TRANSMYOCARDIAL REVASCULARIZATION HANDPIECE ASSEMBLY

Charles Christopher Negus, and Stephen J. Linhares, both of Taunton, Mass., assignors to PLC Medical Systems, Inc., Franklin, Mass.

Continuation-in-part of Ser. No. 190,950, Feb. 3, 1994, which is a continuation-in-part of Ser. No. 201,052, Feb. 24, 1994, which is a continuation of Ser. No. 14,363, Feb. 5, 1993, abandoned, which is a continuation of Ser. No. 928,531, Aug. 13, 1992, abandoned, which is a continuation of Ser. No. 586,891, Sep. 24, 1990, abandoned. This application Oct. 10, 1995, Ser. No. 541,793
Int. Cl.⁶ A61B *17/36*
U.S. Cl. 606—14 **19 Claims**

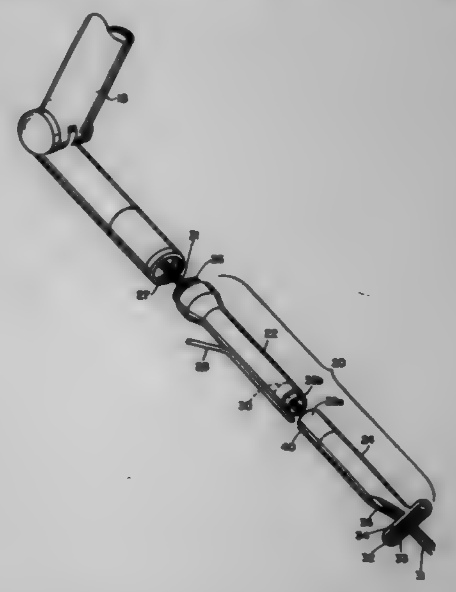

1. A thoracoscopic transmyocardial revascularization handpiece assembly for a medical laser system, comprising:
an elongate barrel having a narrow width sized to fit between the ribs of a patient and having a first passage therethrough for conducting a surgical laser beam;
an elongate handpiece extending from said barrel and having a similarly narrow width commensurate with said barrel and having a second passage therethrough connecting with said first passage for conducting a surgical laser beam;
a contacting surface on a distal end of said handpiece for contacting the wall of the patient's heart; said contacting surface having a width in a first dimension which is approximately that of said handpiece for fitting between the ribs of a patient and having a width in a second dimension which is larger to effect an area of said contacting surface which is substantially larger than the cross-sectional area of said handpiece to provide a more stable platform to maintain perpendicularity between the laser beam and the wall of the heart;
an aperture substantially centered in said contacting surface communicating with said second passage for transmitting the laser beam; and

focusing means in said barrel for focusing the laser beam proximate to the aperture to ablate the tissue of the heart wall and create a hole to the interior heart chamber.

5,700,260
ENDOSCOPIC LIGHT DELIVERY SYSTEM
George Cho, Hopkinton, and Ying Hsaing Cho, Sudbury, both of Mass., assignors to Cynosure, Inc., Bedford, Mass.
Continuation of Ser. No. 242,308, May 13, 1994, Pat. No. 5,476,461. This application Jun. 7, 1995, Ser. No. 479,677
Int. Cl.[6] A61B *17/36*
U.S. Cl. 606—15 **9 Claims**

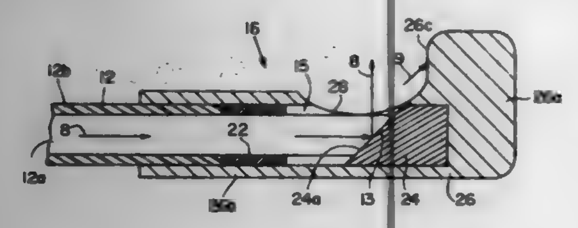

1. An endoscopic light delivery system comprising:
fiber optics for conveying light, the fiber optics having a light delivery end for delivering the conveyed light;
a sheath encasing the fiber optics, the sheath having a terminal end near the light delivery end of the fiber optics;
a mirror positioned adjacent to the light delivery end of the fiber optics for redirecting light conveyed by the fiber optics in a direction lateral to the fiber optics;
a tip member positioning the mirror adjacent to the light delivery end of the fiber optics, the tip member surrounding and extending from the sheath and having an optical window through which redirected light passes; and
a heat resistant ring positioned within the tip member distally from the sheath and encircling only the fiber optics near the light delivery end for shielding the terminal end of the sheath from exposure to heat caused by the delivered light, both the heat resistant ring and the sheath being in substantial contact with the tip member.

5,700,261
BIPOLAR SCISSORS
Ronald J. Brinkerhoff, New Richmond, Ohio, assignor to Ethicon Endo-Surgery, Inc., Cincinnati, Ohio
Filed Mar. 29, 1996, Ser. No. 624,237
Int. Cl.[6] A61B *17/36*
U.S. Cl. 606—41 **4 Claims**

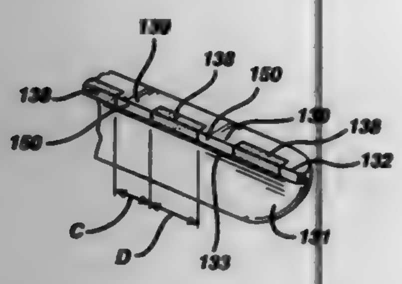

1. An electrosurgical instrument comprising:
a first scissor member including a first shearing member, a first shelf on said first shearing member, a first cutting edge on said first shelf, wherein at least a portion of said first shelf surface includes a plurality of first electrically insulated regions and a plurality of first electrode regions;
a second scissor member pivotally coupled to said first scissor member and including a second shearing member, a second shelf on said second shearing member, a second cutting edge on said second shelf, wherein at least a portion of said second shelf includes a plurality of second electrically insulated regions and a plurality of second electrode regions, said second insulated regions being arranged opposite said second electrode regions.

5,700,262
BIPOLAR ELECTRODE WITH FLUID CHANNELS FOR LESS INVASIVE NEUROSURGERY
George M. Acosta, Long Beach, and Lance Kumm, Tustin, both of Calif., assignors to Neuro Navigational, L.L.C., San Diego, Calif.
Filed Oct. 16, 1995, Ser. No. 543,604
Int. Cl.[6] A61B *17/39*
U.S. Cl. 606—48 **18 Claims**

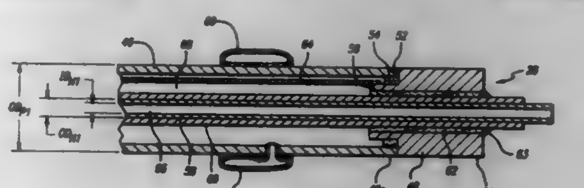

1. A coagulation instrument for less invasive neurosurgery, comprising:
a flexible probe defining a distal end and a proximal end, the probe including:
an outer insulative sheath defining a distal end segment;
an outer hollow cylindrical electrode engaged with the distal end segments of the outer sheath and coaxially disposed therewith; and
an outer hollow electrode assembly defining a fluid pathway therethrough, the inner electrode assembly including an inner electrode established by a hypotube defining an outside diameter of less than about twenty thousandths of an inch (0.020"), the inner electrode assembly being dispopsed within the outer electrode and coaxially oriented therewith such that a substantially empyt void is establihed between the inner electrode assembly and the outer electrode.

5,700,263
BONE DISTRACTION APPARATUS
Stephen A. Schendel, 1001 Hermosa Way, Menlo Park, Calif. 94025
Filed Jun. 17, 1996, Ser. No. 664,398
Int. Cl.[6] A61B *17/58*
U.S. Cl. 606—57 **9 Claims**

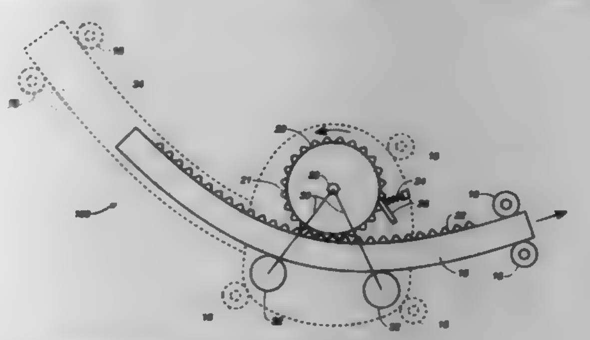

1. A bone distraction device comprising:
a first member for attachment to a first bone segment;
a second member, telescopically interrelated with said first member, for attachment to a second bone segment; and

a mechanism for moving said first member relative to said second member, wherein movement of said first member relative to said second member defines an arcuate path.

5,700,264
APPARATUS AND METHOD FOR PREPARING A SITE FOR AN INTERBODY FUSION IMPLANT
James F. Zucherman, 3035 Price St., San Francisco, Calif. 94123, and Ken Y. Hsu, 52 Clarendon Ave., San Francisco, Calif. 94114
Filed Jul. 1, 1996, Ser. No. 673,127
Int. Cl.[6] A61B *17/14*
U.S. Cl. 606—79 **36 Claims**

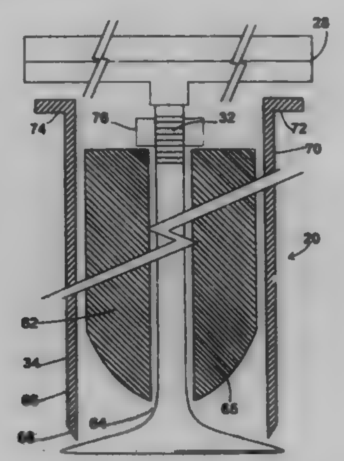

1. An instrument set for forming a bore between adjacent spaced bones comprising:
an alignment probe with a head end mounted on a post;
said head end including a first arm and a second arm;
said first arm having first and second lateral sides, and said second arm having third and fourth lateral sides;
wherein said first lateral side of said first arm is on the same side of the head end as said third lateral side of said second arm, and said second lateral side of said first arm is on the same side of the head end as said fourth lateral side of said second arm;
wherein said first lateral side is sharpened and said fourth lateral side is sharpened;
a cutter which fits over said post and which has a distal cutting edge;
said cutting edge describes a width; and
said width is less than the combined length of said first arm and said second arm such that said first arm and said second arm provide a stop for said cutter.

5,700,265
METHOD AND APPARATUS FOR DRILLING A CURVED BORE IN AN OBJECT
Jack W. Romano, 3931 Whitman Ave. North, Apartment 6, Seattle, Wash. 98103
Division of Ser. No. 59,834, May 11, 1993, Pat. No. 5,509,918. This application Apr. 11, 1996, Ser. No. 630,847
Int. Cl.[6] A61B *17/56*
U.S. Cl. 606—80 **35 Claims**

1. Apparatus for drilling a curved bore in a object, comprising:
(a) a housing having a distal end and a proximal end, the distal end being adapted to position adjacent an object to be drilled, the proximal end being adapted to couple with a drive housing;
(b) opposed first and second cutting bits, each coupled to a corresponding first and second flexible cable, said first and

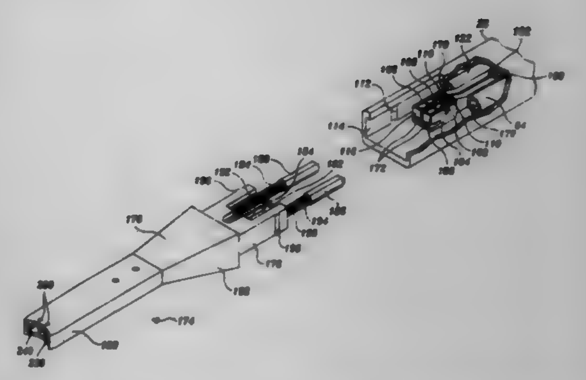

second cutting bits being disposed adjacent the distal end of the housing and rotated by the first and second flexible cables, said first and second flexible cables extending through the housing and terminating in disconnectable drive couplings adjacent the proximal end of said housing, rotation of the drive couplings by an externally applied rotational force being transmitted through the first and second flexible cables to rotatably drive the first and second cutting bits;
(c) a first and a second curved guide supporting the corresponding first and second flexible cables and corresponding first and second cutting bits, said first and second curved guides being pivotally mounted adjacent the distal end of the housing and swingable about a pivot in opposed, intersecting coplanar arcs along a path that defines the bore in the object; and
(d) first and second links having proximal and distal ends, the first and second links being mounted in the housing for movement independently of each other such that one link can be moved without equal and corresponding movement of the other link, the distal ends of said first and second links being coupled mechanically to the corresponding first and second curved guides, independently of the coupling of the first and second flexible cables to the first and second cutting bits, for controlling swinging of the first and second curved guides about the pivot, the proximal ends of said first and second links being attachable to disconnectable fittings, so that an external force applied to the first and second links is transmitted through the first and second links to swing the first and second curved guides and the first and second cutting bits outwardly from the distal end of the housing to produce the curved bore.

5,700,266
SYSTEM FOR REPAIR OF CAPSULO-LABRAL SEPARATIONS
Douglas T. Harryman, II, Bellevue, Wash., assignor to The University of Washington, Seattle, Wash.
Division of Ser. No. 288,629, Aug. 10, 1994, Pat. No. 5,624,446, which is a continuation-in-part of Ser. No. 943,814, Sep. 11, 1992, Pat. No. 5,342,369. This application Mar. 25, 1997, Ser. No. 824,255
Int. Cl.[6] A61B *17/56*
U.S. Cl. 606—80 **3 Claims**

1. The method of repairing a capsulo-labral separation which comprises opening a posterior portal for access to the shoulder joint affected by the separation, inserting a drill guide through the posterior portal and between the affected glenoid cavity and humeral ball, fitting a transverse of the drill guide over the rim of the glenoid cavity at the side of the glenoid cavity generally opposite from the portal, passing a drilling implement through a longitudinal bore of the drill guide for bridging across the recess and for penetrating through the portion of the rim received in the

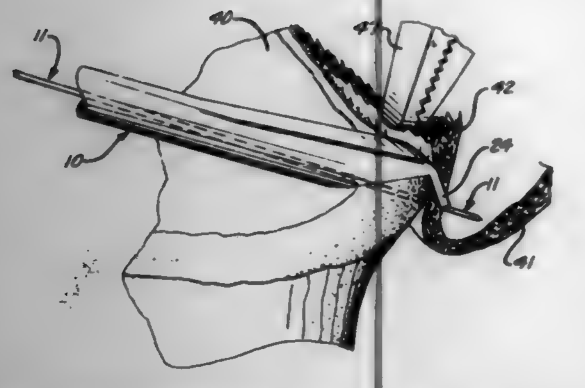

recess to form a hole therethrough, and suturing the separated labrum in the area of the lesion to such hole.

5,700,267
METHOD FOR REPAIRING BONE FRACTURES USING BONE-LOCK SYSTEM
Mark Gerald Urbanski, San Diego, Calif., assignor to Kinetikos Medical Incorporated, San Diego, Calif.
Filed Aug. 15, 1996, Ser. No. 704,463
Int. Cl.⁶ A61B *17/88*
U.S. Cl. 606—86 **28 Claims**

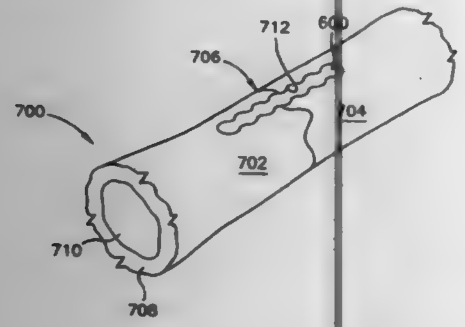

16. A method for joining first and second bone members, said bone members having been previously joined at a fracture site to form a unitary piece of bone, said method comprising the steps of:
uniting the first and second bone members at the fracture site;
holding the fractured bone members together at the fracture site while performing steps comprising:
defining a gripping socket from the first bone member to the second bone member across a fracture site, the gripping socket having multiple gripping features;
placing a shapeable mending material into the gripping socket; and
hardening the mending material in place to form a rigid mending key having gripping protrusions complimentarily engaging the gripping socket.

5,700,268
DEVICE FOR MEASURING LEG LENGTH AND OFF-SET FOR A TOTAL HIP REPLACEMENT
Kim C. Bertin, Salt Lake City, Utah, assignor to Zimmer, Inc., Warsaw, Ind.
Filed Jan. 6, 1997, Ser. No. 778,848
Int. Cl.⁶ A61B *17/56*
U.S. Cl. 606—102 **11 Claims**

1. A device for use in an orthopedic surgical procedure for a replacement of a patient's hip for measuring the length of the patient's leg and displacement prior to dislocation of the pathologic hip comprising, an ilium pin to be driven into a patient's

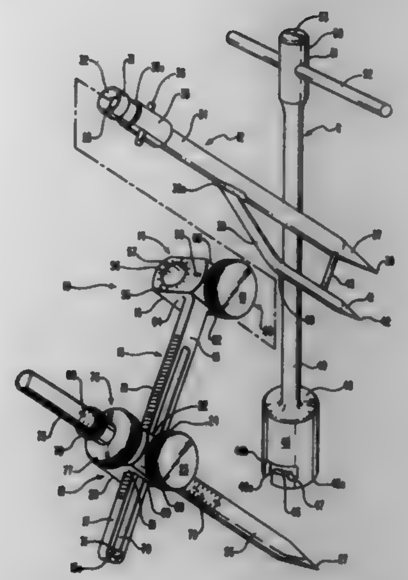

ilium, an indicator means formed on said ilium pin that further includes an upper section for mounting an ilium pin mount of a measuring bar; a measuring bar with a straight member having scale markings scribed therealong, with an ilium pin mount formed in one end and including an angular measuring means for determining a relative position of said ilium pin to said ilium pin mount for determining angular displacement; a femoral slide arranged for travel along said measuring bar straight member; a femoral pin means for extension at a right angle from said femoral slide and having an end for positioning on a location on the patient's proximal femur; and means on said femoral slide for comparison with said measuring bar scale markings for determining distance of said femoral slide from said measuring bar ilium pin mount.

5,700,269
ENDOLUMINAL PROSTHESIS DEPLOYMENT DEVICE FOR USE WITH PROSTHESES OF VARIABLE LENGTH AND HAVING RETRACTION ABILITY
Leonard Pinchuk, Miami, and Kevin J. Clair, Pembroke Pines, both of Fla., assignors to Corvita Corporation, Miami, Fla.
Continuation-in-part of Ser. No. 466,934, Jun. 6, 1995. This application Nov. 13, 1995, Ser. No. 556,408
Int. Cl.⁶ A61B *19/00*
U.S. Cl. 606—108 **15 Claims**

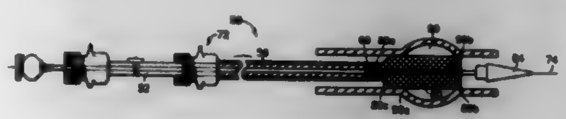

1. An endoluminal prosthesis deployment device for use with an endoluminal prosthesis, said device comprising:
a) an outer sheath having a proximal end and a distal end;
b) an inner plunger having a proximal end and a distal end, said inner plunger slideably disposed within said outer sheath; and
c) prosthesis gripping means on said distal end of said inner plunger for engaging a proximal end of a prosthesis and drawing the prosthesis into said distal end of said outer sheath without engaining the distal end of the prosthesis when the prothesis is completely drawn into said outer sheath, said prosthesis gripping means comprises a soft tear-resistant bulb.

5,700,270
SURGICAL CLIP APPLIER
Mark S. Peyser, Easton; Douglas J. Cuny, Bethel; Douglas W. Strauss, Hamden; Scott W. Reed, Shelton; Csaba L. Rethy, Fairfield, and Ernie Aranyi, Easton, all of Conn., assignors to United States Surgical Corporation, Norwalk, Conn.
Filed Oct. 20, 1995, Ser. No. 546,484
Int. Cl.⁶ A61B *17/10*
U.S. Cl. 606—142 **21 Claims**

1. A surgical clip applier comprising:
a housing;
a pair of handles pivotably connected to opposite sides of said housing;
an elongate body portion fixedly secured to and extending from said housing and carrying a plurality of clips;
a jaw assembly fixedly secured to and extending from an end of said body portion opposite said housing, said jaw assembly adapted to accommodate a clip therein; and
a cam plate slidably positioned in said body portion, said cam plate being operatively connected at a first end to at least one of said handles and at a second end to said jaw assembly, such that moving said handles from an open position to a closed position causes a sliding movement of said cam plate with respect to said body portion and said jaw assembly to effect closure of a clip in said jaw assembly.

5,700,271
APPARATUS FOR APPLYING SURGICAL CLIPS
Kenneth H. Whitfield, New Haven, and Ernie Aranyi, Easton, both of Conn., assignors to United States Surgical Corporation, Norwalk, Conn.
Filed Oct. 20, 1995, Ser. No. 546,430
Int. Cl.⁶ A61B *17/00*
U.S. Cl. 606—143 **25 Claims**

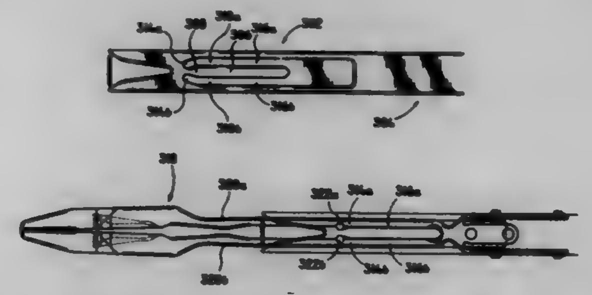

1. An apparatus for endoscopic application of surgical clips to body tissue, which comprises:
a) a handle portion including a first handle and a second handle mounted for relative movement and defining a single closing stroke between an open position and a closed position, the closing stroke including an initial throw, an intermediate throw, and a final throw;
b) a body portion extending distally from the handle portion and defining a longitudinal axis;
c) a plurality of surgical clips disposed within the body portion;
d) a jaw assembly including first and second jaw portions mounted at the distal end portion of the body portion and movable between an approximated position and a spaced position;
e) a jaw control mechanism operatively connected to the jaw assembly and configured to move the first and second jaw portions to the spaced position for reception of a distalmost clip in response to the initial throw of the handles, the jaw control mechanism configured to maintain the jaw portions in the spaced position during the intermediate throw of the handles, the jaw control mechanism configured to move the jaw assembly to the approximated position to deform the distalmost clip in response to the final throw of the handles; and
f) a clip advancer mounted for operative association with the jaw control mechanism and configured to individually distally advance the distalmost clip to the jaw assembly during the intermediate throw of the handles.

5,700,272
ENDOSCOPIC SUTURE SYSTEM
Norman S. Gordon, Irvine; Robert P. Cooper, Yorba Linda, and Richard L. Quick, Trabuco Canyon, all of Calif., assignors to Laurus Medical Corporation, Irvine, Calif.
Division of Ser. No. 57,699, May 4, 1993, Pat. No. 5,458,609, which is a continuation-in-part of Ser. No. 941,382, Sep. 4, 1992, Pat. No. 5,364,408. This application Sep. 27, 1995, Ser. No. 534,501
Int. Cl.⁶ A61B *17/00*
U.S. Cl. 606—144 **9 Claims**

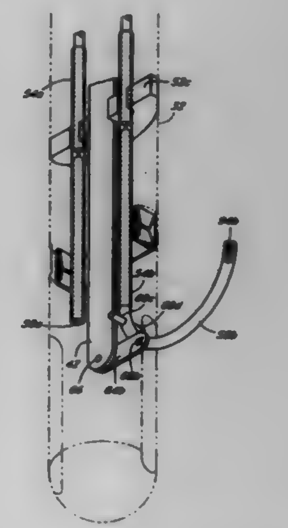

1. A suture device comprising:
an elongate cannular body member having a longitudinal axis and an internal chamber with a first lateral exit port near a distal end of said elongate cannular body member;
a first actuator located near a proximal end of said elongate cannular body member and extending into said internal chamber, said first actuator having a retracted position and a deployed position; and
a first needle deployment mechanism comprising a first needle carrier pivotally mounted within said internal chamber near said distal end of said elongate cannular body member, said first needle deployment mechanism connected to said first actuator and having a retracted configuration when said first actuator is in said retracted position wherein substantially all of said first needle deployment mechanism is contained within said internal chamber and a deployed configuration when said first actuator is in said deployed position, said first needle deployment mechanism includes means for transporting said first needle carrier outside of said internal chamber through

said first lateral exit port along a path having an initial direction away from said elongate cannular body member longitudinal axis as said first actuator begins to move from said retracted position toward said deployed position followed by a direction toward said elongate cannular body member longitudinal axis as said first actuator approaches said deployed position.

5,700,273
WOUND CLOSURE APPARATUS AND METHOD
Terrence J. Buelna, Laguna Beach; Wayne A. Noda, Mission Viejo, and Paul Lubock, Laguna Niguel, all of Calif., assignors to C.R. Bard, Inc., Murray Hill, N.J.
Filed Jul. 14, 1995, Ser. No. 502,482
Int. Cl.⁶ A61B *17/04*
U.S. Cl. 606—148 **12 Claims**

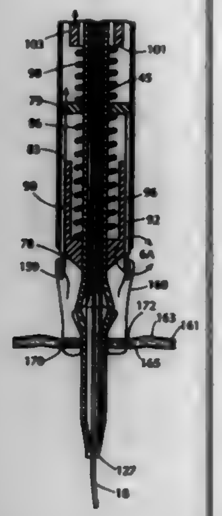

3. A wound closure apparatus for suturing a wound in a body wall, comprising:
a cannula having an axis extending between a proximal end and a distal end;
a handle disposed at the proximal end of the cannula;
a catheter coupled to the distal end of the cannula, the catheter being sized and configured to extend through the wound in the body wall;
a suture extending at least partially through the cannula and the catheter;
a suture manipulator associated with the catheter and operable to manipulate the suture relative to the catheter;
a pair of needles extendable from the cannula into proximity with the catheter; and
a finger tab movable relative to the handle to operate the suture manipulator in order to move the suture into threading engagement with the needles.

5,700,274
REFRACTIVE SURGERY KNIFE
Fred T. Feaster, 4417 Overton Crest, Fort Worth, Tex. 76109
Continuation-in-part of Ser. No. 127,821, Sep. 28, 1993, Pat. No. 5,458,610. This application Oct. 13, 1995, Ser. No. 543,213
Int. Cl.⁶ A61B *17/32*
U.S. Cl. 606—167 **9 Claims**

1. A refractive surgery keratotomy knife, comprising:
a support body having a footplate with first and second opposite facing sides,
said footplate having a bottom surface on said second side to be place against the cornea of the eye,
a thin planar blade having a main cutting edge which is substantially straight and which has a given length,

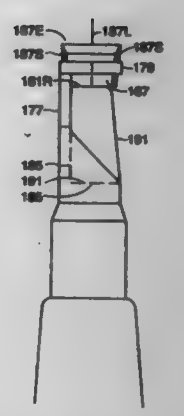

said blade has an attachment portion and two opposite side edges extending from said attachment portion,
each of said side edges has a substantially straight side cutting edge which forms an acute angle relative to the length of said main cutting edge,
said opposite side edges extend away from each other from said attachment portion to said main cutting edge,
a blade holding member coupled to said attachment portion of said blade for supporting said blade in a position to extend from said first side beyond said second side of said footplate with said main cutting edge being located on said second side spaced from said bottom surface of said footplate for surgery incision purposes.

5,700,275
ARTICULATING ENDOSCOPIC SURGICAL INSTRUMENT
Mace H. Bell, Rowayton, and Henry R. Sienkiewicz, Stamford, both of Conn., assignors to United States Surgical Corporation, Norwalk, Conn.
Filed Apr. 25, 1996, Ser. No. 637,883
Int. Cl.⁶ A61B *17/28*
U.S. Cl. 606—208 **29 Claims**

1. A surgical apparatus, which comprises:
a) a housing defining a longitudinal axis;
b) a handle having a first configuration and operably connected to the housing, the handle defining a longitudinal axis angularly disposed relative to the longitudinal axis of the housing;
c) a fixed support having a second configuration substantially different from the first configuration and depending from the housing, the fixed support defining a longitudinal axis angularly disposed relative to the longitudinal axis of the housing, the support extending from the housing at a position rotated about the longitudinal axis of the housing with respect to the handle;
d) a body portion extending distally from the housing; and
e) a tool assembly operably associated with a distal end portion of the body portion and remotely actuable by the handle.

5,700,276
SURGICAL FORCEPS
Rainer Benecke, Todendorf, Germany, assignor to Olympus Winter & Ibe GmbH, Hamburg, Germany
Filed Jun. 7, 1996, Ser. No. 660,485
Claims priority, application Germany, Jun. 10, 1995, 195 21 257.6
Int. Cl.⁶ A61B *17/28*
U.S. Cl. 606—208 **6 Claims**

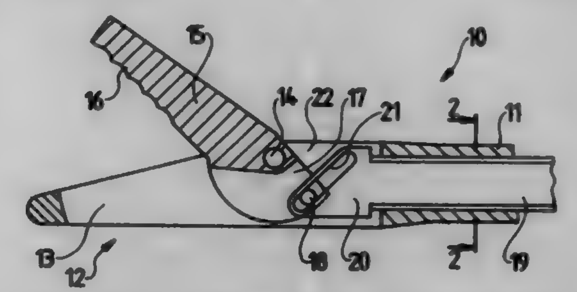

1. A surgical forceps assembly for endoscopic and arthroscopic interventions, comprising
a stem (11) having a longitudinal, axially extending passage therein;
a forceps (12) at a distal end of said stem, said forceps comprising a first jaw (13) fixedly carried by said stem and a second jaw (15) pivotably mounted on said stem;
actuator means (23) at a proximal end of said stem;
a force transmitting element (19) passing axially through said stem, said force transmitting element being displaceable along a central longitudinal axis of said stem and connected at a proximal end to said actuator means;
a coupling (20) at a distal end of said force transmitting element, said coupling comprising an elongated slot (21) extending obliquely to the axis of said stem (11); and
said second jaw (15) including an actuating lever comprising two projections (17*a*, 17*b*) defining a cavity receiving said coupling (20) and said elongated slot (21), and a pin (18) extending between said projections, opposite ends of said pin (18) being attached to said projections (17*a*, 17*b*) and laterally projecting into said elongated slot (21) in a sliding relationship, said pin and slot forming a cam drive whereby, when said force transmitting element is displaced axially, said actuating lever is pivoted to move said second jaw toward and away from said first jaw between open and closed positions.

5,700,277
HEMOSTATIC VESSEL PUNCTURE CLOSURE WITH FILAMENT LOCK
John Nash, Downingtown, and Douglas Evans, Devon, both of Pa., assignors to Kensey Nash Corporation, Exton, Pa.
Continuation of Ser. No. 72,293, Jun. 4, 1993, abandoned. This application May 12, 1995, Ser. No. 439,895
Int. Cl.⁶ A61B *17/00*
U.S. Cl. 606—213 **43 Claims**

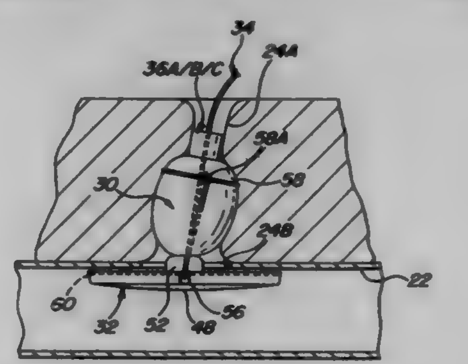

1. A closure device for sealing a percutaneous puncture in the wall of a blood vessel, the puncture being an opening in the wall of the blood vessel and a tract contiguous with the opening and extending through tissue overlying the vessel, said closure device comprising anchoring means, sealing means, filament means having a longitudinal axis, and locking means, said anchoring means being adapted to be brought into engagement with interior tissue of the vessel contiguous with the opening for anchoring therein and with said sealing means adapted to be inserted within the tract, said filament means including a portion connected to said sealing means and extending along a portion thereof so as to be through the tract to said anchoring means and being coupled to said anchoring means in such a manner that said sealing means may be moved in the tract toward said anchoring means to a puncture sealing position by the application of a pulling force on said filament means, whereupon said portion of said filament means is placed in tension, said anchoring means adapted to be in engagement with the interior tissue of the vessel contiguous with the opening when said sealing means is in the puncture sealing position, said locking means comprising a member temporarily slidably mounted on said filament means and actuatable within the tract so that when actuated it is permanently fixedly secured to said filament means to maintain tension in said portion of said filament means and to permanently engage said sealing means to hold said sealing means in the puncture sealing position and thereby prevent said sealing means from moving away from said anchoring means.

5,700,278

Patent Not Issued For This Number

5,700,279
APPETIZING PACIFIER
Charles Blando, 15 Fletcher St., Brentwood, N.Y. 11717
Filed Mar. 27, 1996, Ser. No. 624,813
Int. Cl.⁶ A61J *7/00;17/00*
U.S. Cl. 606—236 **17 Claims**

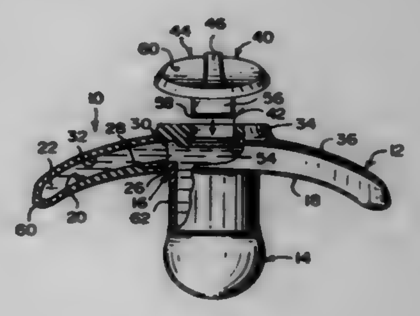

1. An appetizing pacifier comprising:
a) a curved mouth guard;
b) a nipple;
c) means for attaching said nipple centrally to a concave side of said curved mouth guard, so that said nipple will extend from said curved mouth guard; and
d) means within said curved mouth guard and communicating with said nipple, for holding a flavored liquid, so that when said nipple is inserted into a mouth of a baby and the baby sucks on said nipple, the baby will self feed on the flavored liquid, said holding means comprising a chamber completely formed within said curved mouth guard, said chamber being fluidly connected to said nipple, whereby said chamber will retain the flavored liquid therein, until the baby sucks on said nipple and removes the flavored liquid.

5,700,280
METHOD AND APPARATUS FOR CONTROLLING THE CHARGING PHASE OF AN IMPLANTABLE CARDIOVERTER-DEFIBRILLATOR
Sergiu Silvian, La Crescenta, Calif., assignor to Pacesetter, Inc., Sylmar, Calif.
Filed May 3, 1996, Ser. No. 642,546
Int. Cl.[6] A61N *1/39*
U.S. Cl. 607—5 **13 Claims**

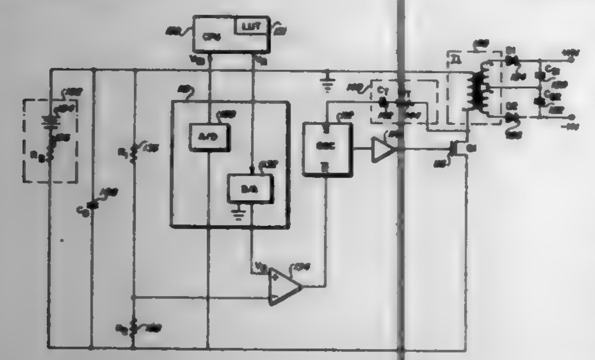

1. An implantable cardioverter-defibrillator having a shocking capacitor chargeable during a conversion phase, comprising:
a battery having an internal battery resistance and a battery voltage that decreases as a function of current drain from the battery due to the internal battery resistance;
flyback transformer means for charging the shocking capacitor during the conversion phase, said conversion phase comprising a series of charging cycles, the flyback transformer means including a primary coil;
charging control means including comparator means for outputting a first reset signal when the battery voltage V_B falls below a predetermined reference voltage V_R, wherein $V_R=V_{B1}-\Delta V_B$, where V_{B1} represents the battery voltage before the conversion phase, and ΔV_B represents a maximum drop in battery voltage from V_{B1} when the battery current drain exceeds a predetermined maximum current, the charging control means comprising:
voltage measuring means for measuring V_{B1} before the conversion phase; and
processing logic means for computing $V_R=V_{B1}-\Delta V_B$ and for providing V_R to the comparator means;
primary switching means for coupling the primary coil of the flyback transformer to the battery during an on time of a charging cycle and uncoupling the primary coil from the battery during an off time of a charging cycle; and wherein
the primary switching means includes a reset input for receiving the first reset signal, wherein the primary switching means terminates the on time in response to the received first reset signal.

5,700,281
STAGE AND STATE MONITORING AUTOMATED EXTERNAL DEFIBRILLATOR
James E. Brewer, St. Paul; Kenneth F. Olson, Edina; John F. Stolte, Burnsville; Nora J. Utke, Minneapolis, and Gary B. Stendahl, Crystal, all of Minn., assignors to SurVivaLink Corporation, Minneapolis, Minn.
Continuation-in-part of Ser. No. 658,200, Jun. 4, 1996. This application Jun. 17, 1996, Ser. No. 668,117
Int. Cl.[6] A61N *1/39;1/04;1/08*
U.S. Cl. 607—5 **31 Claims**

27. A method of monitoring the stage of a rescue procedure utilizing an automated external defibrillator (AED) having rescue stage monitoring means wherein the AED has a case, an electrode terminal mounted to the case, a high voltage circuit contained in the case and electrically connected to the electrode terminal, and a control system coupled to the electrode terminal and the high voltage circuit wherein the control system includes the stage monitoring means, and wherein the control system contains an internal clock and memory means, the method including the steps of:
(a) polling the AED to determine if the AED is on;
(b) using the internal clock to identify when the AED is turned on;
(c) storing in the memory means the time from the internal clock when the AED is turned on;
(d) measuring the resistance at the electrode terminal;
(e) determining a rescue stage from the measured resistance;
(f) identifying the time the rescue stage began with the internal clock; and
(g) recording in the memory means the time of the rescue stage.

5,700,282
HEART RHYTHM STABILIZATION USING A NEUROCYBERNETIC PROSTHESIS
Jacob Zabara, 200 Locust, Apt. 22D, Philadelphia, Pa. 19106
Filed Oct. 13, 1995, Ser. No. 542,759
Int. Cl.[6] A61N *1/36*
U.S. Cl. 607—9 **20 Claims**

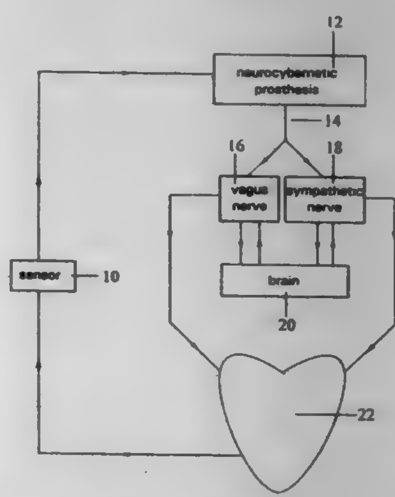

15. An apparatus for restoring a human's heart rhythm to the heart's free running cycle comprising means for detecting a human's arrhythmia, said means in electronic communication with a neurocybernetic prosthesis, and means for sending at least one electronic signal simultaneously to the human's vagus nerves and cardiac sympathetic nerves from the neurocybernetic prosthesis.

5,700,283
METHOD AND APPARATUS FOR PACING PATIENTS WITH SEVERE CONGESTIVE HEART FAILURE
Rodney W. Salo, Fridley, Minn., assignor to Cardiac Pacemakers, Inc., St. Paul, Minn.
Filed Nov. 25, 1996, Ser. No. 754,932
Int. Cl.[6] A61N *1/365;1/368;1/362*
U.S. Cl. 607—17 **4 Claims**

1. A method of treating patients having congestive heart failure comprising the steps of:
(a) providing a dual-chamber cardiac pacemaker of the type having means for sensing atrial depolarization signals, means for sensing ventricular depolarization signals, means for generating ventricular stimulating signals, an accelerometer for sensing heart sounds and a programmable AV delay interval between the sensing of an atrial depolarizing signal and the sensing of a next succeeding ventricular depolarizing signal;
(b) deriving from the heart sounds a measure of an interval between the onset of atrial ejection and of aortic ejection in the patient's heart; and

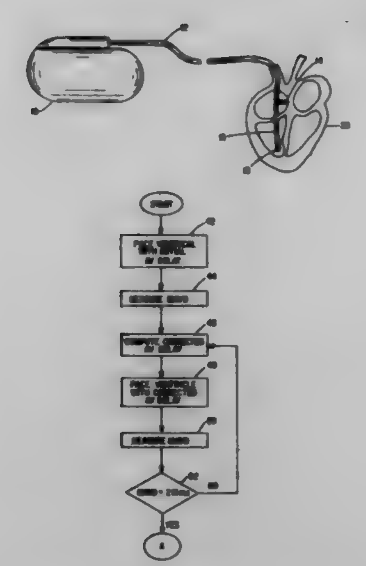

(c) adjusting the AV delay interval of the pacemaker until the interval measured in step (b) falls in the range of from about 180 ms to 250 ms.

5,700,284
HEAT APPLICATION METHOD
Byron C. Owens, Asheboro, N.C., assignor to Vesture Corporation, Asheboro, N.C.
Continuation of Ser. No. 426,987, Apr. 24, 1995, Pat. No. 5,575,812, which is a continuation of Ser. No. 136,021, Oct. 14, 1993, Pat. No. 5,500,010, which is a continuation of Ser. No. 85,570, Jun. 30, 1993, Pat. No. 5,300,105, which is a continuation of Ser. No. 871,826, Apr. 21, 1992, abandoned, which is a continuation of Ser. No. 643,344, Jan. 22, 1991, abandoned, which is a continuation-in-part of Ser. No. 486,806, Feb. 26, 1990, abandoned. This application Oct. 15, 1996, Ser. No. 695,589
Int. Cl.[6] A61F *7/00*
U.S. Cl. 607—114 **10 Claims**

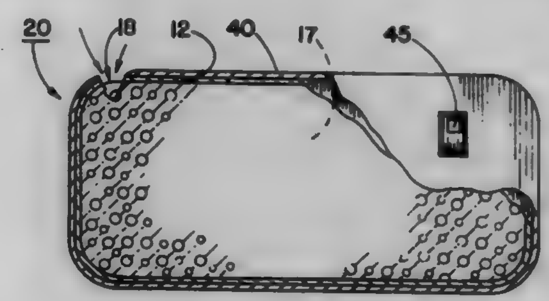

1. A method of applying heat to a selected object, comprising the steps of:
(a) forming a heatable pad having a liquid and a liquid absorbing means sealed within an envelope in which the absorbing means is compressed within the envelope to less than its non-compressed size;
(b) heating the pad; and
(c) placing the heated pad proximate said object to heat said object.

5,700,285
INTRALUMINAL STENT GRAFT
David J. Myers, Camp Verde; James D. Lewis, Flagstaff; Wayne D. House, Flagstaff, and Karl E. Schwarz, Flagstaff, all of Ariz., assignors to W. L. Gore & Associates, Inc., Newark, Del.
Division of Ser. No. 109,214, Aug. 18, 1993, abandoned. This application Jun. 7, 1995, Ser. No. 477,051
Int. Cl.[6] A61F *2/06;2/04*
U.S. Cl. 623—1 **18 Claims**

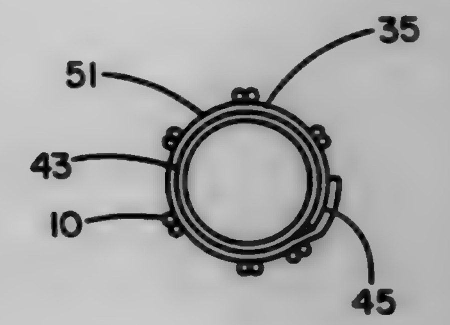

1. A tubular intraluminal graft comprising:
a) a tubular diametrically adjustable stent having an exterior surface, a luminal surface and a wall and having a multiplicity of openings through the wall of the stent;
b) a tubular covering of porous expanded polytetrafluoroethylene affixed to the luminal surface of the tubular, diametrically adjustable stent, said tubular covering being less than about 0.10 mm thick and said tubular covering having an exterior surface, a luminal surface and a seam extending from the exterior surface, through the luminal surface of the tubular covering; and
wherein said intraluminal graft is adapted for implantation in a body conduit.

5,700,286
POLYMER FILM FOR WRAPPING A STENT STRUCTURE
Joseph M. Tartaglia, Redwood City; Joseph P. Loeffler, and Todd H. Turnlund, both of Mountain View, all of Calif., assignors to Advanced Cardiovascular Systems, Inc., Santa Clara, Calif.
Continuation of Ser. No. 355,402, Dec. 13, 1994, abandoned. This application Aug. 22, 1996, Ser. No. 701,405
Int. Cl.[6] A61F *2/06*
U.S. Cl. 623—1 **9 Claims**

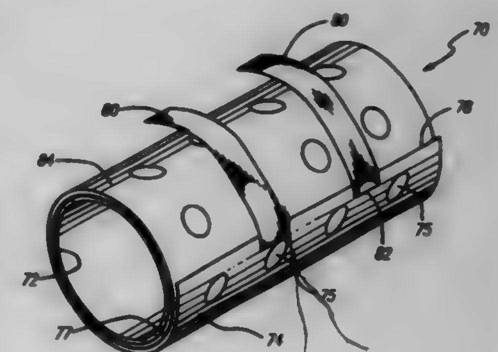

1. A drug loaded stent, comprising:
an expandable stent structural member;

a sheet of polymeric material disposed on the stent structural member, said sheet of polymeric material being wrapped about the stent structural member at least one time to form a coil having an interior portion, an exterior portion, and an exterior end portion, said sheet of polymeric material being loaded with a therapeutic agent; and

at least one strip of elastic material, one end of said at least one strip of elastic material being attached to the exterior portion of the coil, and an opposing end of the strip of elastic material being attached to another portion of the exterior of the coil, said strip of elastic material extending across the exterior end portion of the coil, to secure the coil on the stent, and such that said sheet of polymeric material is free to uncoil when said stent structural member is expanded, to substantially match the expansion of said stent structural member.

5,700,287

PROSTHETIC VASCULAR GRAFT WITH DEFLECTABLY SECURED FIBERS

David J. Myers, Camp Verde; James D. Lewis, and Carey V. Campbell, both of Flagstaff, all of Ariz., assignors to W. L. Gore & Associates, Inc., Newark, Del.

Division of Ser. No. 88,599, Aug. 17, 1993, Pat. No. 5,628,782, which is a continuation-in-part of Ser. No. 989,442, Dec. 11, 1992, abandoned. This application Oct. 29, 1996, Ser. No. 743,954

Int. Cl.[6] A61F *2/06; 2/04*

U.S. Cl. 623—1 **66 Claims**

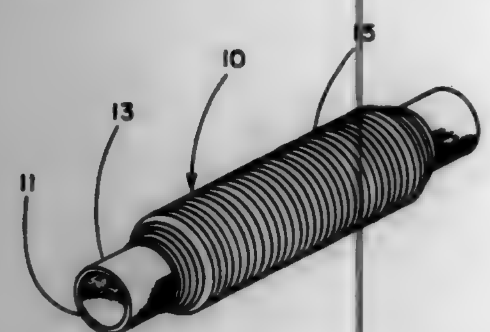

1. A prosthetic vascular graft comprising a base substrate of biocompatible material having an ablumenal surface wherein a substantial portion of the ablumenal surface is provided with an outer covering of deflectably secured material that is capable of being deflected with respect to the ablumenal surface of the base substrate, wherein said deflectably secured material is at least two different types of fibers and, wherein the deflectably secured material is secured to the base substrate in such a manner that a substantial portion of the deflectably secured material is not directly secured to the base substrate and a substantial portion of adjacent surfaces of the deflectably secured material are not directly secured to each other wherein said fibers are free to move with respect to each other within a length of the graft.

5,700,288

BREAST PROSTHESIS

L. Daniel Eaton, Little Rock, Ark., assignor to The Board of Trustees of the University of Arkansas, Little Rock, Ark.

Filed Jul. 18, 1996, Ser. No. 683,816

Int. Cl.[6] A61F *2/52;* **A41C** *3/10*

U.S. Cl. 623—7 **12 Claims**

1. In combination, a breast prosthesis and a bra adapted to be worn with the breast prosthesis by a mastectomy patient, comprising:

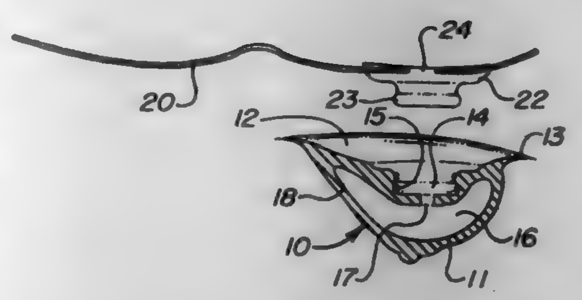

a breast prosthesis having first attachment means; and

a bra having second attachment means, said first and second attachment means being adapted for releasible interconnection one to the other; and

wherein said bra further comprises an underwire and further wherein said second attachment means is affixed to said underwire;

wherein said underwire further comprises a loop portion and further wherein said second attachment means is affixed to said loop portion.

5,700,289

TISSUE-ENGINEERED BONE REPAIR USING CULTURED PERIOSTEAL CELLS

Arnold S. Breitbart, Great Neck, and Daniel A. Grande, Sea Cliff, both of N.Y., assignors to North Shore University Hospital Research Corporation, Manhasset, N.Y.

Filed Oct. 20, 1995, Ser. No. 545,988

Int. Cl.[6] A61F *2/28; 2/54*

U.S. Cl. 623—16 **15 Claims**

1. A method for making a composition for repair of bone defects comprising

obtaining periosteal tissue,

dissociating the cells in the periosteal tissue, and

culturing the cells on and in a biocompatible matrix suitable for repair of the defect under conditions inducing the periosteal cells to form bone.

5,700,290

Patent Not Issued For This Number

5,700,291

LAPAROSCOPIC SPINAL STABILIZATION METHOD

Stephen D. Kuslich, Minneapolis, and Douglas W. Kohrs, Edina, both of Minn., assignors to Spine-Tech, Inc., Minneapolis, Minn.

Continuation of Ser. No. 299,807, Sep. 1, 1994, Pat. No. 5,489,307, which is a continuation of Ser. No. 15,863, Feb. 10, 1993, abandoned. This application Jun. 7, 1995, Ser. No. 488,375

Int. Cl.[6] A61F *2/44;* **A61B** *17/17*

U.S. Cl. 623—17 **2 Claims**

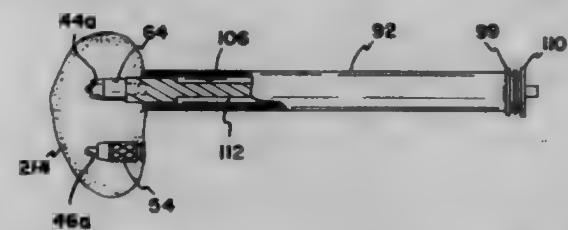

2. A method for placement of an implant into a disk space separating a first vertebra and a second vertebra, said method comprising:

laparoscopically placing a hollow tube having an open first end and an open second end with said tube placed with said first end positioned against said disc space at a desired implant location;

selecting a boring tool having a guide pin on a distal end thereof with said guide pin having a radial dimension sized to approximate a desired distraction of said disc space and smaller than a radial dimension of a cutting portion of said tool at said distal end, said guide pin attached to said boring tool for movement therewith and prevented from movement independent from said boring tool;

simultaneously inserting said distal end and said attached guide pin into said second end of said tube and passing said distal end and said attached guide pin through said tube to said desired implant location;

advancing said guide pin into said disc space with said pin urging against opposing surfaces of said first vertebra and said second vertebra;

rotating a proximal end of said boring tool external of said tube to cause rotation of said cutting portion with said cutting portion boring into said opposing surfaces;

advancing said distal end into said disc space while continuing said rotation and with said guide pin guiding said distal end by advancing into said disk space simultaneous with an advancement of said cutting portion to maintain an axis of said distal end in parallel and equidistant spacing between said opposing surfaces.

5,700,292

SPINAL STABILIZATION SYSTEM AND METHOD

Joseph Y. Margulies, Pleasantville, N.Y., assignor to Hospital for Joint Diseases, New York, N.Y.

Continuation of Ser. No. 273,371, Jul. 11, 1994, abandoned, which is a continuation of Ser. No. 973,294, Nov. 9, 1992, abandoned. This application Sep. 15, 1995, Ser. No. 528,801

Int. Cl.[6] A61F *2/10*

U.S. Cl. 623—17 **17 Claims**

1. A spinal stabilization system for fixing vertebrae and sacrum

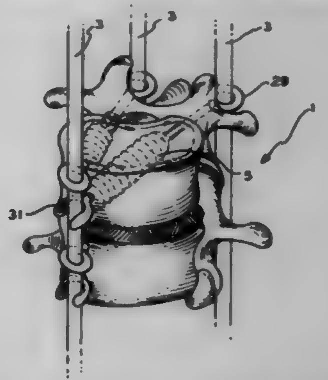

bodies having anterior and posterior aspects, said system comprising:

a plurality of substantially rigid, elongated column means for being disposed over the vertebrae or sacrum bodies, at least one of said column means for being disposed over an anterior aspect of said bodies and at least another of said column means for being disposed over a posterior aspect of said bodies; and

a plurality of substantially rigid, elongated beam means, each of said beam means having a length for and extending through said bodies, each of said beam means including an attachment means on each end thereof for attaching each of said ends to said column means.

5,700,293

LAUNDRY SORTING AND STORAGE DEVICE AND METHOD

Susan M. Rydell, 8062 Charlecot Dr., Indianapolis, Ind. 46268

Division of Ser. No. 61,351, May 13, 1993, Pat. No. 5,547,271.
This application Jul. 23, 1996, Ser. No. 685,171
Int. Cl.^{6} A47B *81/00;* D06F *93/00;95/00*
U.S. Cl. 8—137 5 Claims

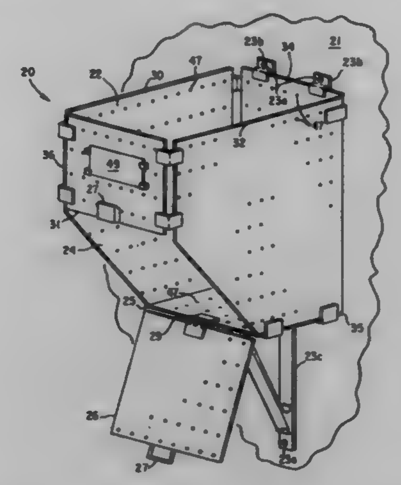

1. A method for preparing laundry for laundering comprising:
mounting a laundry bin to a wall adjacent to a washing machine, said laundry bin having a rear mounting surface for attachment to the wall, a top end opening and a normally-closed drop bottom positioned above said washing machine when said bin is mounted to said wall, wherein said drop bottom is remote from said rear mounting surface;
collecting laundry periodically in said bin through said top end opening until said bin is full; and
emptying laundry from said bin to said washing machine by opening said drop bottom.

5,700,294

METHOD OF WASHING WITH DETERGENT COMPOSITIONS COMPRISING AMORPHOUS SILICOALUMINATE SCAVENGERS OF CALCIUM PRECIPITATES

Patrick Boittiaux, Saint Mande; Virginie Couvret, Paris, and Daniel Joubert, Vineuil Saint Firmin, all of France, assignors to Rhone-Poulenc Chimie, Courbevoie Cedex, France

Continuation of Ser. No. 405,932, Mar. 17, 1995, abandoned, which is a continuation of Ser. No. 67,011, May 26, 1993, abandoned. This application Jan. 11, 1996, Ser. No. 584,244
Claims priority, application France, May 26, 1992, 92 06419
Int. Cl.^{6} B08B *3/08;* C11D *7/20;7/60;* D06F *35/00*
U.S. Cl. 8—137 4 Claims

1. A method of washing fabrics in a washing machine or dishes in a dishwasher wherein said fabrics or said dishes are contacted with a phosphate free detergent powder, said detergent powder comprising as a precipitate scavenging agent a mixture comprising:
an amorphous alkali metal silicoaluminate having the general formula:
$xM_2O \cdot yAl_2O_3 \cdot zSiO_2 \cdot wH_2O$, in which M is an alkali metal, x is a number ranging from 0.2 to 2, y is equal to 1, z is a number ranging from 8 to 15, and w is a real positive number other than 0, the mixture further comprising an alkali metal carbonate and an alkali metal silicate,
wherein the quantity of amorphous alkali metal silicoaluminate represents from 2 to 10% of the weight of the powder, the metal silicate represents about 21% of the powder, and the quantity of the alkali metal carbonate corresponds at least to that necessary to precipitate ionic calcium.

5,700,295

UV ABSORBERS, THEIR PREPARATION AND THE USE THEREOF

Francesco Fuso, Therwil, and Gerhard Reinert, Allschwil, both of Switzerland, assignors to Ciba Specialty Chemicals Corporation, Tarrytown, N.Y.

Filed Oct. 11, 1995, Ser. No. 541,007
Claims priority, application Switzerland, Oct. 13, 1994, 3088/94
Int. Cl.^{6} D06M *13/358;* C07D *251/52;239/48;239/50*
U.S. Cl. 8—189 14 Claims

1. A compound of formula

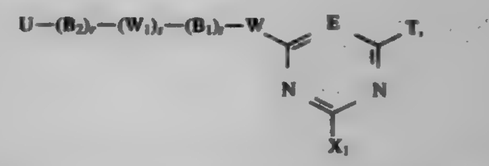

(1)

wherein

B_1 and B_2 are each independently of the other an aliphatic linking group,

U is the radical of formula

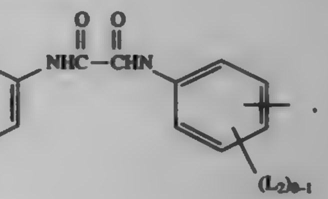

(5a')

wherein

$(L_1)_{1-3}$ is 1 to 3 radicals L_1 selected from the group consisting of sulfo, hydroxy, C_1–C_4alkyl and C_1–C_{12}alkoxy and $(L_2)_{0-1}$ is 0 to 1 substituents L_2 selected from the group consisting of sulfo, C_1–C_4alkyl and C_1–C_{12}alkoxy,

W is a group —NR_2—, —O— or —S—,

R_2 is hydrogen or unsubstituted or substituted C_1–C_4alkyl,

W_1 is a radical —C(O)O—, —O(O)C—, —C(O)NH— or —HN(O)C—,

=E— is a group =N— or =$C(T_1)$—, and T_1 is halogen, C_1–C_4alkylsulfonyl, formyl, C_2–C_4alkoxycarbonyl or cyano,

X_1 is halogen, hydroxy, sulfo, C_1–C_4alkylsulfonyl, phenylsulfonyl, unsubstituted or substituted amino, 3-carboxypyridin-1-yl or 3-carbamoylpyridin-1-yl,

T independently has one of the meanings given for X_1 or is an alkoxy, aryloxy, alkylthio or arylthio radical, or is a nitrogen-containing heterocyclic radical or is a reactive radical of formula

$$-\underset{\underset{R_1}{|}}{N}-\overset{\overset{R_4}{|}}{alk}-SO_2-Y, \qquad (2a)$$

$$-\underset{\underset{R_3}{|}}{N}-alk-W_2-alk'-SO_2-Y, \qquad (2b)$$

$$-\underset{\underset{R_3}{|}}{N}-arylene-SO_2-Y, \qquad (2c)$$

$$-\underset{\underset{R_3}{|}}{N}-arylene-(alk)_n-W_3-alk'-SO_2-Y \text{ or} \qquad (2d)$$

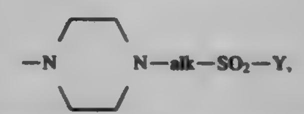

(2e)

R_1 is hydrogen, C_1–C_4alkyl which is unsubstituted or substituted by hydroxy, sulfo, sulfato, carboxy or cyano, or is a radical

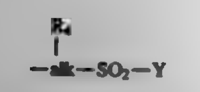

R_3 is hydrogen or C_1–C_4alkyl,

R_4 is hydrogen, hydroxy, sulfo, sulfato, carboxy, cyano, halogen, C_1–C_4alkoxycarbonyl, C_1–C_4alkanoyloxy, carbamoyl or the group —SO_2—Y,

alk and alk' are each independently of the other C_1–C_6alkylene,

arylene is a phenylene or naphthylene radical which is unsubstituted or substituted by sulfo, carboxy, C_1–C_4alkyl, C_1–C_4alkoxy or halogen,

Y is vinyl or a radical —CH_2—CH_2—Z and Z is a leaving group,

W_2 is —O— or —NR_3—,

W_3 is a group —SO_2—NR_1—, —$CONR_1$— or —NR_1CO—, and

r, s, t and u are each independently of one another 0 or 1, s being 0 when t is 0,

with the proviso that the compound of formula (1) carry at least one sulfo or sulfato group and at least one group which is removable under alkaline conditions.

5,700,296
AZO COMPOUND AND A POLARIZING FILM CONTAINING THE SAME

Kazuya Ogino, Minoo; Kaneo Yokoyama, Nara; Narutoshi Hayashi, Niihama; Takashi Omura, Kobe, and Setsuko Yamamoto, Toyonaka, all of Japan, assignors to Sumitomo Chemical Company, Limited, Osaka, Japan

Filed Feb. 20, 1996, Ser. No. 603,107

Claims priority, application Japan, Feb. 20, 1995, 7-030902; Nov. 28, 1995, 7-309339

Int. Cl.[6] C09B *31/068;* G02B *5/30;* D06P *3/00*

U.S. Cl. 8—409 **26 Claims**

15. An azo compound represented by the following formulae (I) or (II):

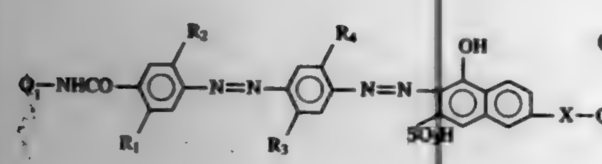

(I)

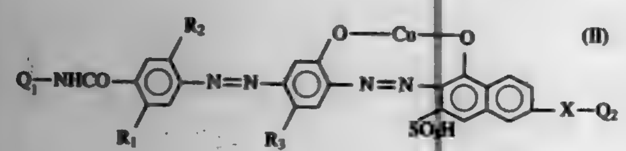

(II)

wherein Q_1 represents a substituted or unsubstituted phenyl group or a substituted or unsubstituted naphthyl group, Q_2 represents a substituted or unsubstituted phenyl group; R_1 and R_2 each independently represent a hydrogen atom, a hydroxy group, a C_1–C_4 alkyl group, a C_1–C_4 alkoxy group or a halogen atom; R_3 and R_4 each independently represent a hydrogen atom, a hydroxy group, a C_1–C_4 alkyl group, a C_1–C_4 alkoxy group or a substituted amino group; and X represents —N=N—; or a salt thereof.

5,700,297
APPARATUS FOR PROVIDING CONSISTENT, NON-JAMMING REGISTRATION OF NOTCHED SEMICONDUCTOR WAFERS

Joseph F. Vollaro, Pleasantville, N.Y., assignor to IPEC Precision, Inc., Bethel, Conn.

Continuation of Ser. No. 258,138, Jun. 10, 1994, abandoned, which is a continuation of Ser. No. 46,053, Apr. 12, 1993, abandoned, which is a continuation-in-part of Ser. No. 937,793, Aug. 28, 1992, Pat. No. 5,352,249. This application Feb. 20, 1996, Ser. No. 602,263

Int. Cl.[6] B23Q *3/18*

U.S. Cl. 29—25.01 **5 Claims**

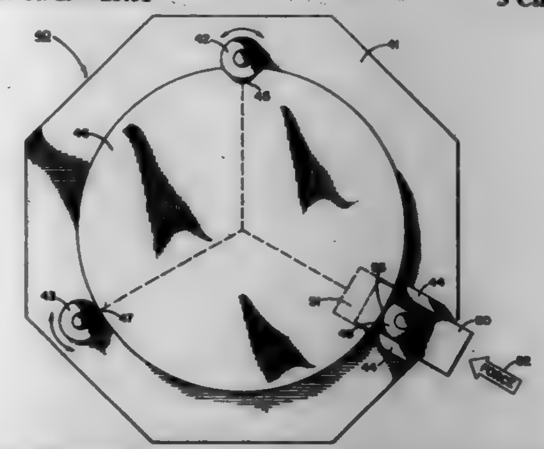

1. Apparatus for providing consistent orientation of a semiconductor wafer having a notch in the circumference thereof, said apparatus comprising:

a support for said wafer including a flat portion directly underlying and contacting said wafer;

a first rotatable roller fixedly attached to said support, said first roller touching both walls of said notch when a wafer is correctly oriented in said apparatus;

a second rotatable roller fixedly attached to said support, said second roller touching the circumference of said water at a first position approximately 120 degrees from said notch; and

a third rotatable roller movably attached to said support to move in a direction approximately along a radius of said wafer, said third roller contacting said wafer approximately 120 degrees each from said notch and from said first position when said third rotatable roller is moved to contact said wafer, whereby said wafer can rotate as said first roller abuts both walls of said notch and said second roller simultaneously abuts said wafer.

5,700,298
CARBON ANODE FOR LITHIUM ION ELECTROCHEMICAL CELL

Hang Shi; Jeremy Barker, and Rene Koksbang, all of Henderson, Nev., assignors to Valence Technology, Inc., Henderson, Nev.

Filed Mar. 15, 1996, Ser. No. 616,826

Int. Cl.[6] H01M *6/00;4/62;* C01B *31/04;* C25B *11/12*

U.S. Cl. 29—623.1 **20 Claims**

1. A method of preparing an electrochemical cell and controlling the first cycle capacity loss of said electrochemical cell, which method comprises the steps of:

(a) forming an intercalation based anode comprising graphite particles by a process comprising:

(i) providing an initial graphite composition;

(ii) measuring the percentage of 3R phase graphite present in said initial graphite composition;

(iii) increasing the percentage of 3R phase graphite in said initial graphite composition to form a second graphite composition which comprises graphite particles having an average diameter of less than 75 μm;

(b) providing a cathode; and

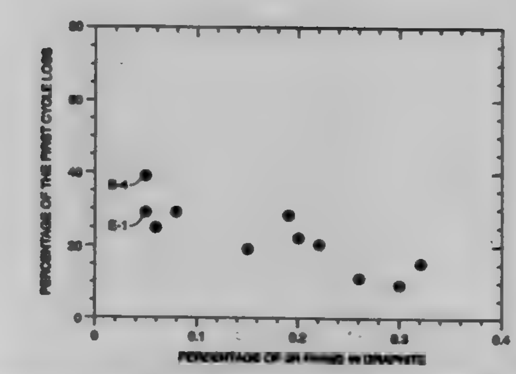

(c) interposing a non-aqueous electrolyte containing a solvent and lithium salt between the anode and cathode.

5,700,299
BATTERY CORE WINDER AND METHOD OF WINDING A BATTERY CORE

Thomas C. Clark, Hampton Lake, Fla., assignor to Eveready Battery Company, Inc., St. Louis, Mo.

Filed Dec. 12, 1996, Ser. No. 764,740

Int. Cl.[6] H01M *6/00;* B23P *19/04*

U.S. Cl. 29—623.1 **11 Claims**

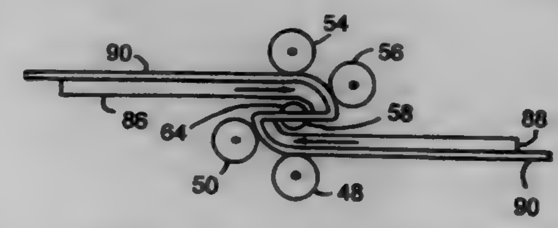

9. A method for winding a plurality of flexible strip members into a coil comprising a first conducting flexible electrode having a first leading edge, a second conducting flexible electrode having a second leading edge, and a separator, said method comprising the steps, performed in the sequence listed, of:

positioning the first conducting flexible electrode on a first feeder bed, the first leading edge proximate to a first edge of a first arbor half having a first generally flat surface and a first curvilinear driving surface;

positioning the separator generally on the first conducting flexible electrode, on said first generally flat surface, and on a second feeder bed in line with said first feeder bed;

positioning the second conducting flexible electrode on the separator on said second feeder bed, the second leading edge proximate to a second edge of said first arbor half;

registering a second arbor half having a second generally flat surface and a second curvilinear driving surface to an engagement position over said first arbor half, such that said first and second generally flat surfaces are facing each other thereby interposing the separator between said first and said second flat surfaces;

positioning a first pair of forming rollers proximate to said first curvilinear surface forming a first gap between said first curvilinear surface and said first roller pair and a second pair of forming rollers proximate to said second curvilinear surface forming a second gap between said second curvilinear surface and said second roller pair, said first and second forming roller pairs for forming the electrodes about said first and said second curvilinear surfaces;

rotating said first and second arbor halves to begin winding the separator about said and first and said second arbor halves;

capturing the first leading edge between the separator and the first curvilinear surface and capturing the second leading edge between the separator and the second curvilinear surface by continued rotation of said first and said second arbor halves; and

rotating said first and second arbor halves until the coil is completely formed.

5,700,300
ELECTROLYTE COATING SYSTEM FOR POROUS ELECTRODES

Gert Jensen, Boulder City, Nev., and Dale Shackle, Morgan Hill, Calif., assignors to Valence Technology, Inc., Henderson, Nev.

Filed Aug. 12, 1996, Ser. No. 689,586

Int. Cl.[6] H01M *6/00*

U.S. Cl. 29—623.5 **14 Claims**

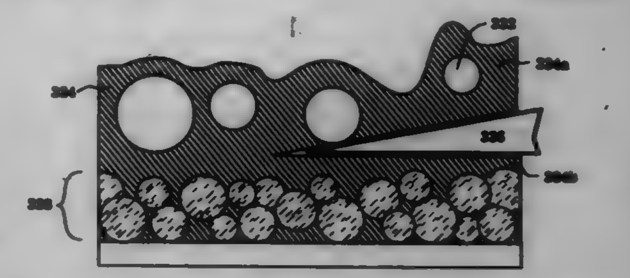

1. A method of preparing a porous electrode structure having an electrolyte layer thereupon, said method comprising:

(a) preparing a porous electrode structure;

(b) layering excess low-viscosity electrolyte pre-wet material upon an electrode surface of the porous electrode;

(c) removing excess low-viscosity electrolyte pre-wet material to remove bubbles and form a scraped pre-wet material;

(d) allowing the scraped pre-wet material to absorb into the porous electrode structure; and

(e) applying a viscous electrolyte precursor material to the surface of the porous electrode structure with absorbed pre-wet material.

5,700,301
FUEL ADDITIVES AND METHOD

Syed Habib Ahmed, London, Great Britain, assignor to Chemadd Limited, London, England

Continuation of Ser. No. 266,955, Jun. 27, 1994, Pat. No. 5,538,522. This application Apr. 30, 1996, Ser. No. 641,189

Claims priority, application United Kingdom, Jun. 28, 1993, 9313326

Int. Cl.[6] C10L *1/22*

U.S. Cl. 44—412 **5 Claims**

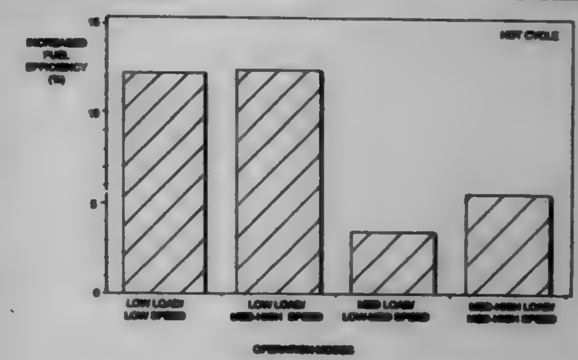

1. A method of improving the combustion efficiency and fuel economy, and reducing the amount of harmful pollutants formed in the combustion process of a combustion system, comprising the step of operating the system with a fuel composition which includes a fuel additive, the additive comprising a liquid solution of from 1 to 20% by volume of the additive, of at least one aliphatic amine selected from the group consisting of diamines and diamine and monoamine combinations; from 2.5 to 20% by volume of the additive of, at least one aliphatic alcohol; and at least

one paraffin having a boiling point no greater than 300° C., wherein said paraffin is present in at least 40% by volume of the additive; said aliphatic amine and said aliphatic alcohol having boiling points less than that of said paraffin.

5,700,302

RADIATION CURABLE ABRASIVE ARTICLE WITH TIE COAT AND METHOD

William L. Stoetzel, Lakeland, and Scott R. Culler, Burnsville, both of Minn., assignors to Minnesota Mining and Manufacturing Company, St. Paul, Minn.

Filed Mar. 15, 1996, Ser. No. 616,544

Int. Cl.[6] **B24D** *3/34*

U.S. Cl. 51—295 **30 Claims**

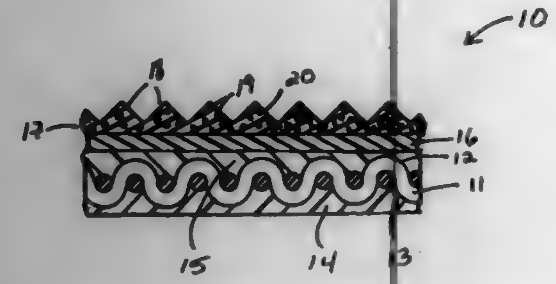

1. A method of preparing an abrasive article, the method comprising:
(a) providing a backing having a first major surface;
(b) coating the first major surface of the backing with a tie coat precursor, wherein the fie coat precursor comprises a first radiation curable component;
(c) applying an abrasive slurry to the first major surface of the backing after coating the fie coat precursor thereon, wherein the abrasive slurry comprises a plurality of abrasive particles and a binder precursor, and further wherein the binder precursor comprises a second radiation curable component;
(d) at least partially curing the tie coat precursor; and
(e) at least partially curing the binder precursor to form an abrasive article.

5,700,303

CHROME POLISH/EXHAUST PIPE DE-BLUER

Richard A. Zander, and Jeffrey S. McKenzie, both of 10507 Gravelly Lk Dr. SW. Ste. 15A-235, Tacoma, Wash. 98499

Filed Oct. 31, 1996, Ser. No. 742,204

Int. Cl.[6] **C09G** *1/02*

U.S. Cl. 51—309 **1 Claim**

1. A chrome polish/exhaust pipe de-bluer consisting of a mixture of 20 lbs. aluminum oxide powder and 8 oz. walnut shell powder.

5,700,304

FILTER WITH PROTECTIVE SHIELD

Chong-Kim Foo, Wavre, Belgium, assignor to Donaldson Company, Inc., Minneapolis, Minn.

Filed Feb. 29, 1996, Ser. No. 610,116

Int. Cl.[6] **B01D** *27/06*

U.S. Cl. 55—337 **11 Claims**

1. A filter arrangement comprising:
(a) a housing;
(b) a removable and replaceable cylindrical filter element operably positioned in said housing for filtering of air passing therethrough; said filter element comprising:
(i) a first liner having regions open to passage of air therethrough; said first liner having an upstream surface and a downstream surface;

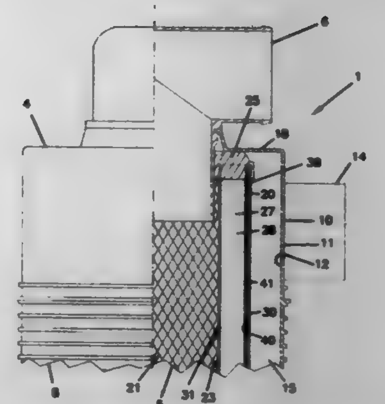

(ii) a region of filter media positioned downstream from said first liner; and
(iii) a screen arrangement positioned along a portion of said first liner downstream surface; said screen arrangement being substantially impervious to air flow through any portion thereof; and said screen arrangement being positioned to block said portion of said first liner to air flow therethrough and into a portion of said region of filter media; and,
(c) a precleaner arrangement including:
(i) a tangential air inlet constructed and arranged to direct air flow into said housing in a circular pattern around said filter element; and,
(ii) a particulate collection chamber;
(d) said screen arrangement including a portion aligned with said tangential air inlet to inhibit air from passing into said air filter element without first passing in a circular flow at least partially around said filter element.

5,700,305

METHOD OF PRODUCING HEATABLE MIRRORS BY DEPOSITING COATINGS ON GLASS

Martin Lowe, and Timothy Jenkinson, both of Greater Manchester, United Kingdom, assignors to Pilkington Glass Limited, United Kingdom

Division of Ser. No. 370,410, Jan. 9, 1995, Pat. No. 5,576,885. This application Jul. 30, 1996, Ser. No. 681,914

Claims priority, application United Kingdom, Jan. 10, 1994, 9400323

Int. Cl.[6] **C03C** *17/00;25/02;* **C03B** *13/00;18/02*

U.S. Cl. 65—60.1 **12 Claims**

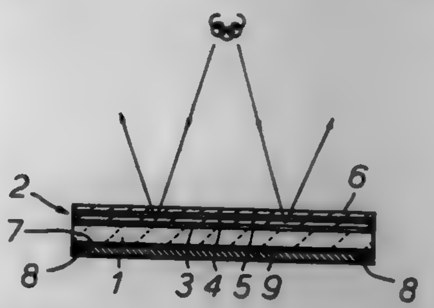

1. A method of producing heatable mirrors comprising depositing onto a ribbon of hot glass during the production process a non-metallic reflecting coating comprising a reflecting layer and at least two reflection enhancing layers, the reflection enhancing layers comprising an intermediate layer of the coating of relatively low refractive index and a layer adjacent to the intermediate layer of relatively high refractive index, the two layers other than the intermediate layer being outer and inner layers of the coating each having a refractive index of at least 1.6, the intermediate layer having a refractive index less than the refractive index of either said inner layer or said outer layer and less than 3, at least one of said inner and outer layers being of silicon, the aggregate refractive index of the inner and outer layers being at least 5.5, whereby the mirrors so formed have a visible light reflection in the range of 70% to 90%, and depositing an electroconductive heating layer onto the mirrors.

5,700,306

GLASS SHEET STRIP FORMING SYSTEM INCLUDING ANNEALING LEHR

Robert E. Maltby, Jr., Wayne; Harold A. McMaster, Perrysburg; Philip J. Breno, Oregon; James W. Buckingham, Pemberville, and Michael J. Vild, Toledo, all of Ohio, assignors to Glasstech, Inc., Perrysburg, Ohio

Continuation of Ser. No. 212,556, Mar. 11, 1994, abandoned, which is a continuation of Ser. No. 992,169, Dec. 17, 1992, abandoned, which is a continuation of Ser. No. 671,505, Mar. 19, 1991, Pat. No. 5,209,767. This application Jan. 31, 1995, Ser. No. 383,602

Int. Cl.[6] **C03B** *18/00;25/06*

U.S. Cl. 65—182.2 **14 Claims**

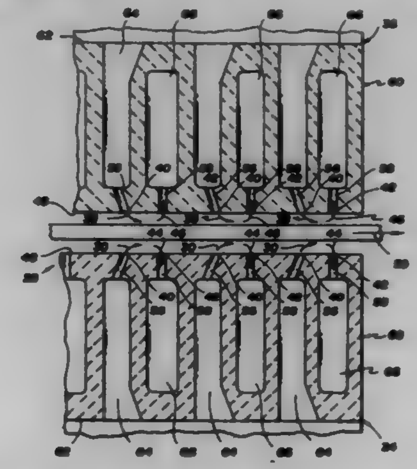

1. A glass sheet strip forming system comprising:
a forming station for forming a continuous hot glass sheet strip having oppositely facing lower and upper surfaces, the forming station including a bath of hot molten tin on which the strip is floated and delivered from the forming station horizontally; and
a glass sheet strip annealing lehr including:
(a) a housing defining a heated chamber and having an entry end for horizontally receiving the continuous hot glass sheet strip from the forming station prior to cooling below the annealing point, said housing having an exit end from which the strip exits the heated chamber, and the heated chamber having a decreasing temperature from the entry end of the housing toward the exit end thereof to provide relatively slow cooling that anneals the strip; and
(b) a conveyor including a gas support including a plurality of sets of lower and upper manifolds between the entry and exit ends of the housing, the lower manifolds each delivering an upward gas flow to provide the sole support of the glass sheet strip within the housing until the surfaces of the strip are cooled below the strain point of the strip, the upper manifolds each delivering a downward gas flow that impinges on the glass sheet strip to cooperate with the upward gas flow from the lower manifolds in providing uniform forced convection heat transfer with the lower and upper surfaces of the strip, each of the manifolds including supply openings through which the gas flow of the manifold is fed for impingement on the glass sheet strip, each of the manifolds including exhaust openings through which the gas flow is exhausted after impingement on the glass sheet strip, each manifold having the supply and exhaust openings thereof provided with elongated shapes that extend transversely in a horizontal direction to the direction of movement of the glass sheet strip, the supply and exhaust openings of each manifold being in an alternating relationship along the direction of movement of the glass sheet strip, each manifold also including a gas burner and at least one gas jet pump for receiving pressurized gas and heated products of combustion from the gas burner for mixing with the gas flow from the exhaust openings for recirculating gas flow back to the supply openings, and the conveyor including a drive for engaging the strip after the surfaces thereof are cooled below the strain point of the strip to pull the strip from the entry end of the housing toward the exit end thereof over the gas support.

5,700,307

DIE FOR PRESS-MOLDING OPTICAL ELEMENTS

Yoshinari Kashiwagi, Neyagawa; Makoto Umetani, Izumi; Hidenao Kataoka, Hirakata; Kenji Inoue, Nishinomiya; Shoji Nakamura, Hirakata, and Satoru Morimoto, Tondabayashi, all of Japan, assignors to Matsushita Electric Industrial Co., Ltd., Osaka, Japan

Filed Jul. 28, 1994, Ser. No. 281,690

Claims priority, application Japan, Jul. 28, 1993, 5-186047; Nov. 4, 1993, 5-275623; Dec. 16, 1993, 5-316188; Jun. 2, 1994, 6-121207

Int. Cl.[6] **C03B** *11/06*

U.S. Cl. 65—374.1 **6 Claims**

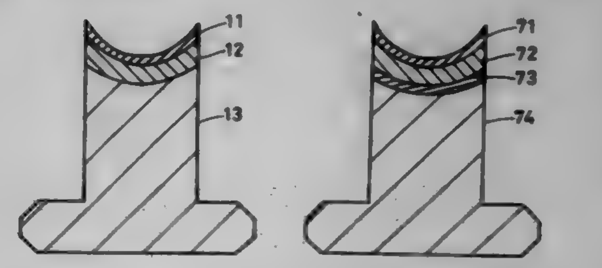

1. A die for press-molding glass optical elements, comprising:
(a) a base material having heat resistance and sufficient strength to withstand press-molding of optical glass elements;
(b) at least one film on said base material comprising an alloy film containing P and one metal selected from the group consisting of Ni, Co, and Fe, and one metal selected from the group consisting of Si, Ti, Cu, Zr, Nb, Mo, Ru, Rh, Pd, Hf, Ta, W, Re, Os, and Ir, to form a cutting layer; and
(c) a surface protective layer on top of said cutting layer made of an alloy film comprising at least one metal selected from the group consisting of Pt, Pd, Ir, Rh, Os, Ru, Re, W, and Ta.

5,700,308

METHOD FOR ENHANCING REACTION RATES IN METALS REFINING EXTRACTION, AND RECYCLING OPERATIONS INVOLVING MELTS CONTAINING IONIC SPECIES SUCH AS SLAGS, MATTES, FLUXES

Uday B. Pal, Needham, and Julian Szekely, Weston, both of Mass., assignors to Massachusetts Institute of Technology, Cambridge, Mass.

Filed Jan. 20, 1995, Ser. No. 375,866

Int. Cl.[6] **C21B** *13/13*

U.S. Cl. 75—10.1 **75 Claims**

1. A process for enhancing reactions between a molten metal and a slag comprising:
contacting the slag and the molten metal such that at least a portion of the metal is dispersed in the slag, thereby generating a slag-metal dispersion;
discharging space charge within the slag-metal dispersion by contacting the slag-metal dispersion with arc means; and

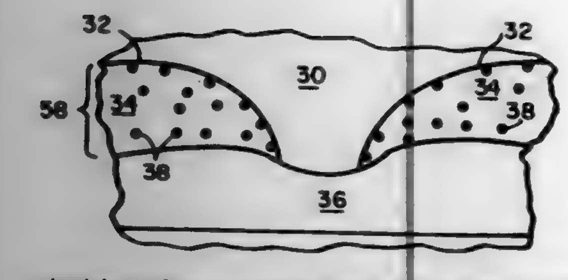

maintaining and regenerating the slag-metal dispersion such that additional space charges in the slag-metal dispersion are discharged.

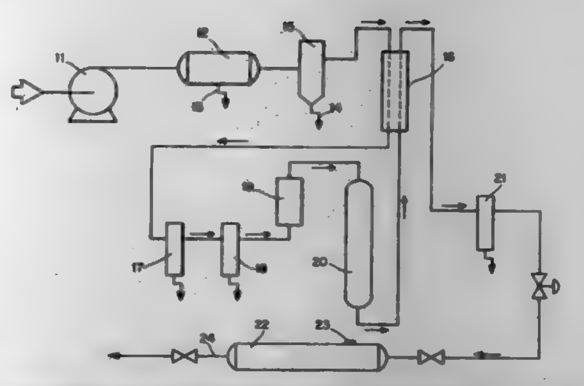

(c) passing the substantially oil-free compressed gas stream through a gas separation membrane system.

5,700,309
METHOD AND POWDER MIXTURE FOR REPAIRING OXIDE BASED REFRACTORY BODIES
Alexandre Zivkovic, Brussels; Jean-Pierre Meynckens, Villers-Perwin, and Bernard Somerhausen, Nivelles, all of Belgium, assignors to Glaverbel, Brussels, Belgium
Continuation of Ser. No. 357,549, Dec. 15, 1994, abandoned, which is a continuation-in-part of Ser. No. 350,974, Nov. 29, 1994, abandoned. This application Dec. 26, 1996, Ser. No. 772,868
Claims priority, application United Kingdom, Dec. 1, 1993, 93-24-655.1
Int. Cl.^{6} B22F *1/00*
U.S. Cl. 75—252 **18 Claims**

1. A method of repairing an oxide-based refractory body by projecting a powder mixture against a hot surface of the body and in the presence of oxygen to provide a refractory repair mass, the method comprising:

a. providing a powder mixture comprised of:
from 80% to 95% by weight of refractory particles comprised of at least one refractory oxide; and
from 5% to 20% by weight of fuel particles which react in an exothermic manner with oxygen to form a refractory oxide and which are particles selected from the group consisting of magnesium, aluminum, silicon, and mixtures thereof,
wherein the refractory particles further comprise particles of silicon carbide in an amount which is effective to provide a reduced porosity of a refractory repair mass produced from the powder mixture and which ranges from at least 1% by weight but does not exceed 10% by weight based on the total weight of the powder mixture; and
b. projecting the powder mixture against a hot surface of the oxide-based refractory body and in the presence of oxygen.

5,700,310
REMOVAL OF OIL FROM COMPRESSED GAS WITH MACROPOROUS POLYMERIC ADSORBENT
Reid Henry Bowman, Walnut Creek, Calif., and H. Robert Goltz, Midland, Mich., assignors to MG Generon, Inc., Malvern, Pa.
Filed Dec. 29, 1995, Ser. No. 566,374
Int. Cl.^{6} B01D *53/22*
U.S. Cl. 95—45 **27 Claims**

1. A process for separating a gas mixture into components by permeation through a membrane, the process comprising:

(a) compressing the gas mixture in oil-lubricated compression means to form an oil-mist-containing compressed gas stream, the compressed gas stream having a relative humidity of any value up to 100%, wherein the compressed gas stream contains oil havinq a molecular weight of at least about 300;
(b) passing the oil-mist-containing compressed gas stream through a macroporous polymeric adsorbent, without previously reducing the relative humidity of the compressed gas stream, to form a substantially oil-free compressed gas stream; and

---

5,700,311
METHODS OF SELECTIVELY SEPARATING CO_2 FROM A MULTICOMPONENT GASEOUS STREAM
Dwain F. Spencer, 24 Fairway Pl., Half Moon Bay, Calif. 94019
Filed Apr. 30, 1996, Ser. No. 643,151
Int. Cl.^{6} B01D *53/78*
U.S. Cl. 95—236 **10 Claims**

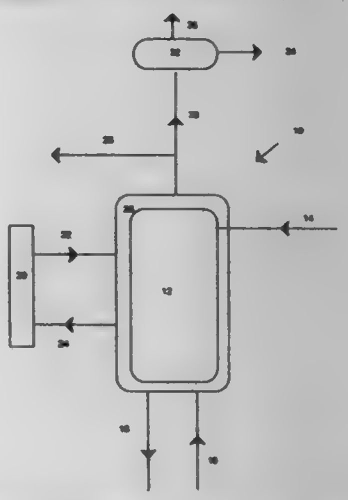

1. A method for removing CO_2 from the multicomponent gaseous stream to produce a CO_2 depleted gaseous stream, said method comprising:
contacting said multicomponent gaseous stream with CO_2 nucleated water under conditions of CO_2 clathrate formation wherein the temperature ranging from −1.5° to 10° C. and the pressure ranges from at least about 6 atm to 20 atm, whereby CO_2 is absorbed from said gaseous stream by said CO_2 nucleated water and concomitantly fixed as CO_2 clathrates upon said contacting, whereby a CO_2 depleted gaseous stream and a CO_2 clathrate slurry are produced; and
separating said CO_2 depleted gaseous stream from said CO_2 clathrate slurry.

5,700,312
UNIVERSAL AUTO LOTION
Ronald L. Fausnight, North Canton, and David A. Lupyan, Chagrin Falls, both of Ohio, assignors to Blue Coral, Inc., Cleveland, Ohio
Continuation of Ser. No. 517,906, Aug. 22, 1995, abandoned. This application Mar. 6, 1997, Ser. No. 812,179
Int. Cl.^{6} C09G *1/10*
U.S. Cl. 106—10 **28 Claims**

1. A finish-treating composition for enhancing the appearance of the external surfaces of an automobile or other vehicle, said composition comprising a dispersion of

(a) micronized wax,
(b) water,
(c) an organic solvent having a vapor pressure of no more than 6 mm Hg at 20° C., and
(d) a silicone liquid is selected from a substituted or unsubstituted dimethylpolysiloxane emulsified in both said water and said organic solvent.

5,700,313
INK FOR INK JET PRINTING
Richard J. Larson, Jr., Walpole, N.H., assignor to Markem Corporation, Keene, N.H.
Continuation of Ser. No. 403,268, Mar. 13, 1995, abandoned. This application Oct. 29, 1996, Ser. No. 742,262
Int. Cl.^{6} C09D *11/02;11/12*
U.S. Cl. 106—22 A **26 Claims**

9. A hot melt ink composition that is solid at ambient temperature but melts at an elevated temperature, said hot melt ink composition being suitable for use in ink jet printing, said ink composition comprising a non-polar vehicle and an oil-soluble dye that is substantially soluble in said vehicle at said elevated condition but is relatively insoluble in said vehicle at ambient conditions, wherein said dye, if said ink composition is ejected as droplets onto a polypropylene film with a polyamide surface, migrates and locks to said polypropylene film with a polyamide surface to provide a substantially permanent readable color.

5,700,314
IMAGE FORMING METHOD, AND INK SET AND INK-JET MACHINERY USED THEREIN
Yutaka Kurabayashi, Tokorozawa; Katsuhiro Shirota, Inagi, and Katsuhiko Takahashi, Yokohama, all of Japan, assignors to Canon Kabushiki Kaisha, Tokyo, Japan
Filed Mar. 28, 1995, Ser. No. 411,963
Claims priority, application Japan, Mar. 30, 1994, 6-060915
Int. Cl.^{6} C09D *11/02*
U.S. Cl. 106—31.27 **30 Claims**

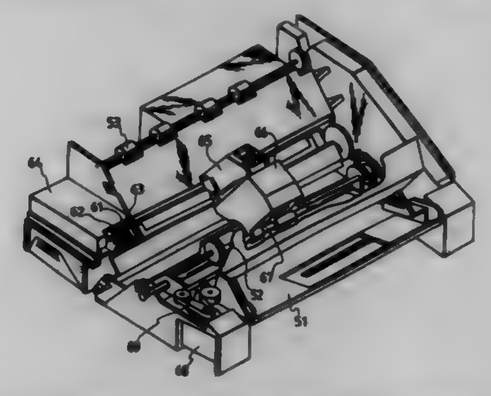

1. An ink set comprising a combination of a liquid composition comprising a low-molecular weight cationic substance and a high-molecular weight cationic substance in combination, with a yellow ink, a cyan ink and a magenta ink,
wherein said three inks each contain a water-soluble anionic dye and are capable of affording a chromaticity CIE L*a*b* to a black image presented on a recording medium by using these inks in combination within the range of the numerical expressions:

$$10 \leq L^* \leq 30,$$

$$0 \leq a^* \leq 7,$$

and

$$-10 \leq b^* \leq 0.$$

5,700,315
ANTI-OUTGASSING INK COMPOSITION AND METHOD FOR USING THE SAME
Donald E. Wenzel, Albany, Oreg., assignor to Hewlett-Packard Company, Palo Alto, Calif.
Filed Feb. 29, 1996, Ser. No. 608,922
Int. Cl.^{6} C09D *11/00*
U.S. Cl. 106—31.58 **1 Claim**

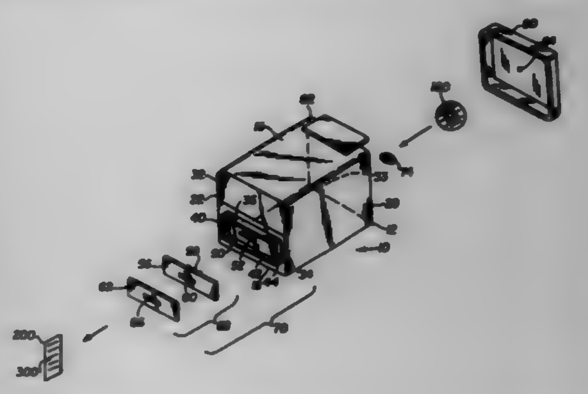

1. A method for preventing outgassing in an ink composition which is used in a thermal printing apparatus, said method comprising the steps of:
combining an ink vehicle with at least one coloring agent to form an ink composition, wherein said ink composition comprises at least one gas dissolved therein; and
adding to said ink composition an anti-outgassing additive which causes said gas to experience an increase in solubility within said ink composition in order to prevent said gas from outgassing and forming gas bubbles in said ink composition when said ink composition is heated to a temperature of about 25°–80° C. in said printing apparatus.

5,700,316
ACOUSTIC INK COMPOSITIONS
Fatima M. Pontes, Mississauga; Guerino G. Sacripante, Oakville; Stephan V. Drappel, Toronto; Anthony J. Paine, and Gregory J. Kovacs, both of Mississauga, all of Canada, assignors to Xerox Corporation, Stamford, Conn.
Filed Mar. 29, 1996, Ser. No. 624,156
Int. Cl.^{6} C09D *11/02*
U.S. Cl. 106—31.58 **38 Claims**

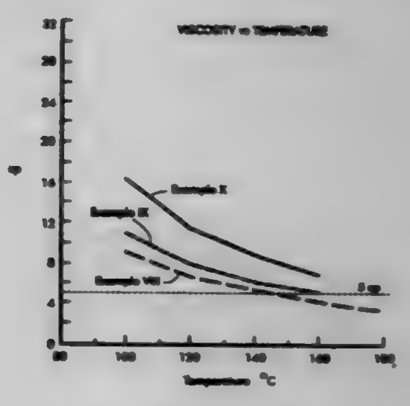

1. An ink composition comprised of a colorant and a vehicle of a poly(alkylene oxide)-alkylate (I), a poly(alkylene oxide)-dialkylate (II), a polyoxa-alkanoic ester (III), or a polyoxa-alkaneoic diester (IV), and which ink possesses a viscosity of from about 1 centipoise to about 15 centipoise at a temperature of from about 125° C. to about 165° C., and which vehicle is of the formulas

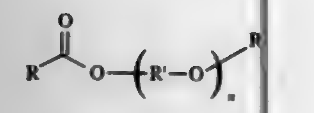
I

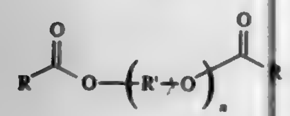
II

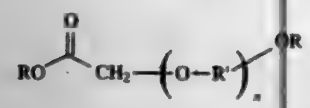
III

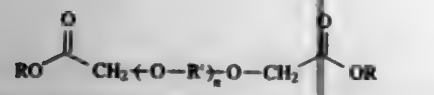
IV

wherein R is alkyl, R' is an alkylene, or arylene, and n is an integer of from about 2 to about 20.

5,700,317
BLEED CONTROL IN INK-JET INKS VIA AQUEOUS PHASE SEPARATION
Raymond J. Adamic, Corvallis, Oreg., assignor to Hewlett-Packard Company, Palo Alto, Calif.
Filed Apr. 25, 1996, Ser. No. 641,995
Int. Cl.[6] C09D *11/02*
U.S. Cl. 106—31.58 **30 Claims**

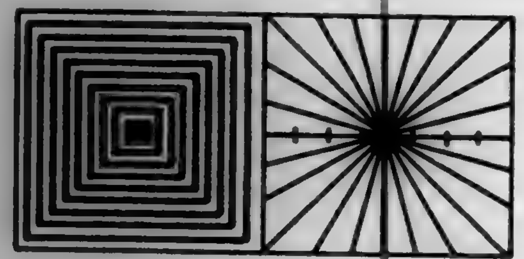

1. An ink-jet ink set for ink-jet priming including a first ink-jet ink comprising a first colorant and a first aqueous vehicle and a second ink-jet ink comprising a second colorant and a second aqueous vehicle, said first aqueous vehicle including a first polymer and said second aqueous vehicle including a second species capable of inducing aqueous phase separation of said first and second aqueous vehicles in the event of contact therebetween, said first and second ink-jet inks having sufficiently low viscosities such that said first and second ink-jet inks are capable of being readily jetted from an ink-jet pen.

5,700,318
DURABLE PIGMENTS FOR PLASTIC
John R. Brand, Oklahoma City, and Kelly A. Green, Edmond, both of Okla., assignors to Kerr-McGee Chemical Corporation, Oklahoma City, Okla.
Filed Apr. 16, 1996, Ser. No. 632,993
Int. Cl.[6] C09C *1/36*
U.S. Cl. 106—442 **48 Claims**

1. An alumina-coated inorganic pigment comprising an inorganic pigment material containing at least about 0.75 percent alumina by weight based upon the weight of said pigment material having a first coating of predominantly boehmite alumina on said inorganic pigment, a second coating of predominantly amorphous alumina over said first coating, and a third coating of predominantly boehmite alumina over said second coating; said first coating being achieved in a discrete interval and said second and third coatings being achieved continuously.

5,700,319
METHOD FOR EXTENDING PIGMENTS
Carl J. Bauer, and Benjamin W. Knesek, both of Gonzales, Tex., assignors to Southern Clay Products, Inc., Gonzales, Tex.
Filed Sep. 28, 1995, Ser. No. 535,374
Int. Cl.[6] C04B *14/10*
U.S. Cl. 106—486 **6 Claims**

1. A method for extending the ability of a pigment which is suspended in an aqueous carrier of a coating composition, to obscure an underlying surface upon which said composition has dried to a film, comprising:

admixing with said composition a particulate water swellable smectite in an amount of between 0.5 to 1.5% by weight based on the weight of the total composition, wherein said smectite; has a gelling efficiency such that a dispersion of 5% by weight of the smectite in water at 25° C. displays a 20 rpm Brookfield viscosity of less than 900 cps.

5,700,320
GROWTH OF SILICON SINGLE CRYSTAL HAVING UNIFORM IMPURITY DISTRIBUTION ALONG LENGTHWISE OR RADIAL DIRECTION
Koji Izunome, Ami-machi; Souroku Kawanishi, Tsukuba; Shinji Togawa, Tsukuba; Atsushi Ikari, Tsukuba; Hitoshi Sasaki, Omiya, and Shigeyuki Kimura, Tsukuba, all of Japan, assignors to Research Development Corporation of Japan, Saitama-ken; Sumitomo Sitix Corporation, Hyogo-ken; Toshiba Ceramics Co., Ltd.; Nippon Steel Corporation, both of Tokyo; Komatsu Electronic Metals Co., Ltd., Kanagawa-ken, and Mitsubishi Materials Corporation, Tokyo, all of Japan
Filed Mar. 22, 1996, Ser. No. 620,391
Claims priority, application Japan, Mar. 24, 1995, 7-091430; Mar. 24, 1995, 7-091431
Int. Cl.[6] C30B *15/04*
U.S. Cl. 117—19 **4 Claims**

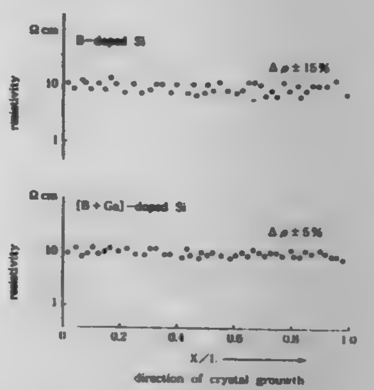

1. A method of pulling up an at least one of B and P-doped Si single crystal from a melt, comprising the steps of:

preparing an at least one of B and P-doped Si melt,

adding an element to reduce a heat expansion coefficient of said melt to said melt, and

pulling up a Si single crystal from said melt, whereby an impurity distribution of said single crystal is substantially uniform along a direction of crystal growth.

5,700,321
METHOD OF FEEDING A DOPANT IN A CONTINUOUSLY CHARGING METHOD
Keishi Niikura, Hiratsuka, Japan, assignor to Komatsu Electronic Metals Co., Ltd., Kanagawa, Japan
Filed Jul. 26, 1996, Ser. No. 687,690
Int. Cl.[6] C30B *15/04*
U.S. Cl. 117—19 **3 Claims**

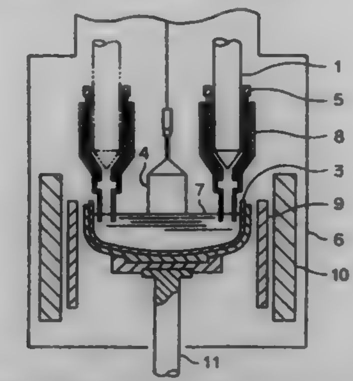

1. A method of feeding a dopant for use with a continuously-charged method, pulling single crystals out from a crucible which contains melted semiconductor material and continuously supplying polysilicon, comprising:

using colloidal silica as a solvent;

adding a water-soluble compound containing a dopant-element as a solute into the solvent to form a solution;

coating the solution onto the polysilicon, thereby feeding the dopant to the melting solution.

5,700,322
CONTINUOUS HOT MELT ADHESIVE APPLICATOR
Wesley C. Fort, Norcross, Ga., assignor to Nordson Corporation, Westlake, Ohio
Continuation of Ser. No. 128,872, Sep. 29, 1993, abandoned. This application Oct. 12, 1994, Ser. No. 322,034
Int. Cl.[6] C23C *14/00*
U.S. Cl. 118—50 **12 Claims**

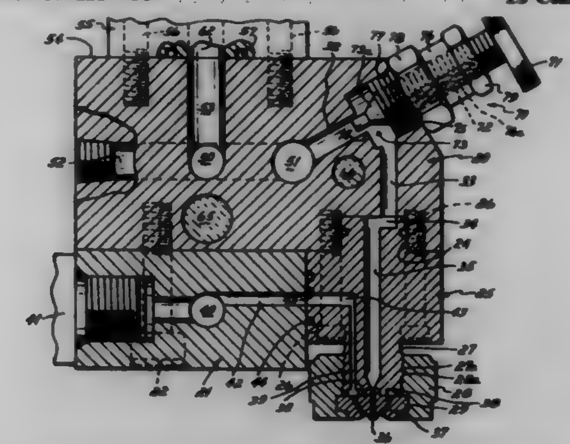

1. Apparatus for dispensing hot melt adhesive comprising:

an adhesive manifold including an adhesive input port for supplying adhesive to a series of adhesive passageways in said adhesive manifold;

a plurality of nozzles attached to said adhesive manifold, each nozzle including an adhesive passageway communicating with the adhesive passageways of said adhesive manifold;

a plurality of valve seats formed as part of said manifold and disposed between respective adhesive passageways in said manifold and said nozzles; and,

a plurality of needle valves extending into said adhesive manifold, each needle valve including a valve stem extending into said adhesive manifold and including a portion thereof which is adjustable relative to one of said valve seats formed as part of the adhesive passageways of said adhesive manifold for controlling the flow of adhesive to a nozzle.

5,700,323
ANTI-CONTAMINATION VALVE FOR POWDER DELIVERY SYSTEM
Dean Koch, Amherst, and Jeff Shutic, Wakeman, both of Ohio, assignors to Nordson Corporation, Westlake, Ohio
Filed Nov. 6, 1995, Ser. No. 553,970
Int. Cl.[6] B05C *19/00*
U.S. Cl. 118—308 **6 Claims**

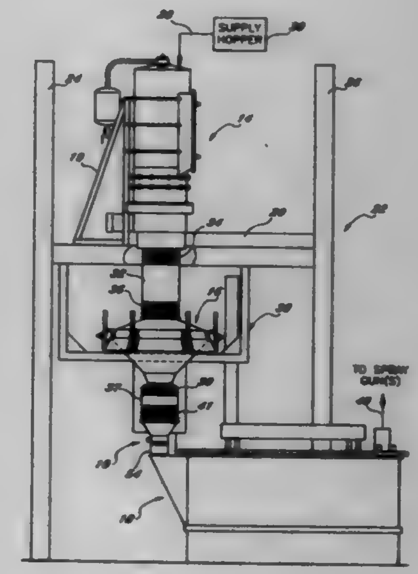

1. A system for delivering powder coating material, comprising:

a source of virgin powder coating material;

a sieve having an inlet communicating with said source, and an outlet;

a powder transfer device having an inlet for receiving powder coating material, and an outlet adapted to communicate with at least one powder spray gun;

a valve connected between said outlet of said sieve and said inlet of said powder transfer device, said valve comprising:

(i) a valve body having an interior including an inlet adapted to communicate with a source of powder coating material, and an outlet adapted to communicate with at least one powder spray gun;

(ii) a closure member carried within said interior of said valve body between said inlet and said outlet, said closure member being movable between an open position and a closed position;

(iii) a sealing member mounted to one of said valve body and said closure member, said sealing member being effective to create a seal between said closure member and said valve body in said closed position of said closure member to substantially isolate said inlet of said valve body from said outlet thereof; and

said valve, with said closure member in said closed position, being effective to isolate said sieve from powder coating material within said powder transfer device and downstream therefrom to avoid contamination of such powder coating material during cleaning of said sieve.

5,700,324
MANUFACTURING APPARATUS OF COMPOSITE FILTER
Chang Sik Kim, Kyongki-Do, Rep. of Korea, assignor to Samsung Electro-Mechanics Co., Ltd., Kyongki-do, Rep. of Korea
Filed Nov. 21, 1995, Ser. No. 561,186
Claims priority, application Rep. of Korea, Nov. 22, 1994, 1994-30932
Int. Cl.^{6} B05C *19/00*
U.S. Cl. 118—407 **6 Claims**

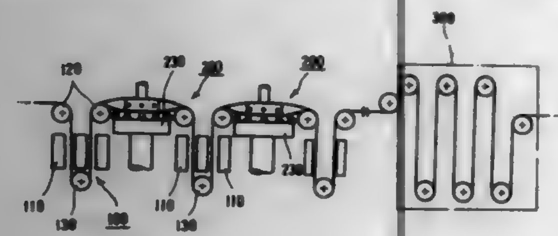

1. An apparatus for treating an electrical bead core element, comprising:
an elongated support strap for supporting at least one bead core element adhered thereto;
a pre-heating section including plural heaters disposed in a vertical arrangement having top rollers and a bottom guide roller disposed therein to enable a continuously fed strap supported bead core element to be passed between said heaters and thereby be preheated;
a coating section disposed adjacent said pre-heating section including a coating tank for containing a powder coating material; a guide shaft disposed above said coating tank; and
a hardening section disposed adjacent said coating section including plural top and bottom rollers so that said strap supported bead core element is moved in a wave form past said pre-heating section and the coating section alternately.

5,700,325
COATING DEVICE AND A METHOD OF COATING
Masaru Watanabe, Nishinomiya, Japan, assignor to Matsushita Electric Industrial Co., Ltd., Kadoma, Japan
Filed Jul. 31, 1995, Ser. No. 509,166
Claims priority, application Japan, Aug. 3, 1994, 6-182289
Int. Cl.^{6} B05C *3/02*
U.S. Cl. 118—411 **16 Claims**

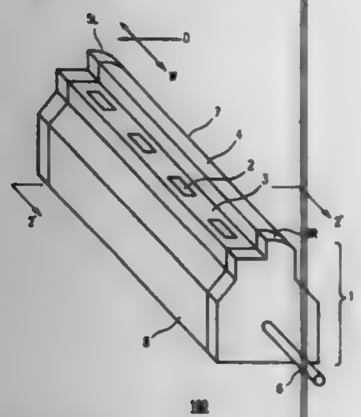

1. A coating device for forming a coating film in a predetermined pattern by applying a coating material from a nozzle to a surface of a base material which continuously travels, the nozzle comprising:
a front block provided upstream with respect to a traveling direction of the base material, a top face of the front block opposing to the traveling base material being a curved face which has a predetermined curvature radius; and
a back block provided downstream with respect to the traveling direction of the base material, a top face of the back block opposing to the traveling base material being a flat face,
wherein the front block is provided so as to project toward the base material with respect to the back block, and
a plurality of discharging openings are provided on the flat face of the back block for discharging the coating material therethrough.

5,700,326
MICROWAVE PLASMA PROCESSING APPARATUS
Kazumasa Takatsu, Yokohama; Takashi Kurokawa, Kawasaki; Hiroshi Echizen, Nagahama; Akio Koganei, Ichikawa; Shuichiro Sugiyama, Nagahama, and Toshio Adachi, Inagi, all of Japan, assignors to Canon Kabushiki Kaisha, Tokyo, Japan
Continuation of Ser. No. 21,859, Feb. 24, 1993, abandoned. This application Feb. 27, 1995, Ser. No. 395,191
Claims priority, application Japan, Feb. 27, 1992, 4-41472
Int. Cl.^{6} C23C *16/00*
U.S. Cl. 118—723 MW **18 Claims**

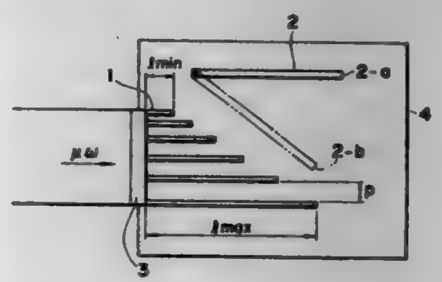

1. A microwave plasma processing apparatus comprising:
a vacuum processing chamber which can contain a substrate having at least a surface to be processed;
a microwave introducing aperture for introducing a microwave into said vacuum processing chamber; and
at least two fins each fin having two ends one end of each fin being arranged adjacent to said microwave introducing aperture at an inner side of said vacuum processing chamber, said fins being arranged in a row which extends from the microwave introducing aperture in a direction parallel to the propagation of the microwave with a space between each fin to divide the microwaves introduced through said microwave introducing aperture;
wherein the lengths of the fins measured from the ends adjacent to the microwave introducing aperture to the ends furthest from the microwave introducing aperture, are different, and a plane defined at least by the ends of two fins furthest from said microwave introducing aperture is not perpendicular and not parallel to a plane of said microwave introducing aperture.

5,700,327
METHOD FOR CLEANING HOLLOW ARTICLES WITH PLASMA
Robert J. Babacz, Hellertown, Pa.; Kadthala R. Narendrnath, Newfield, N.J.; Kevin Frake, Bristol, and Melissa A. Baylog, Easton, both of Pa., assignors to Polar Materials, Incorporated, Pennsville, N.J., by said M. Baylog, R. Babacz and K. Narendrnath
Filed Mar. 10, 1995, Ser. No. 402,091
Int. Cl.^{6} B08B *7/00*
U.S. Cl. 134—1.1 **24 Claims**

1. A method of removing organic compounds from an interior portion of a hollow container having interior and exterior portions and having organic compounds in said interior portion, said method comprising the steps of:

(a) introducing an oxidizing, working gas within an interior portion of said container having organic compounds therein, while maintaining sub-atmosphere pressure therein; and
(b) applying an electric field for converting said working gas within at least said interior portion into a low temperature plasma, and maintaining said plasma so that said plasma oxidizes substantially all of the organic compounds situated within said interior portion of the container.

5,700,328
METHOD OF WASHING A BLIND
Norio Kawanobe, Mito, Japan, assignor to Daitoh System Company, Ltd., Hitachinaka, Japan
Filed Apr. 10, 1996, Ser. No. 630,778
Claims priority, application Japan, May 13, 1995, HEI7-138731
Int. Cl.^{6} B08B *3/12*
U.S. Cl. 134—1 **6 Claims**

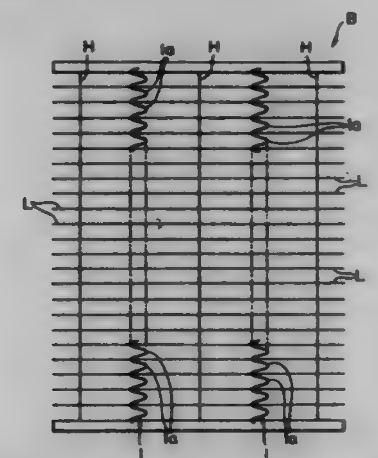

1. A method of washing a blind, said method comprising:
enlarging a distance between adjacent louvers of a blind to be washed, each of said louvers being held in a horizontal orientation;
pressing a coil spring spacer member against said blind so as to insert offset ring portions of said coil spring spacer member between said adjacent louvers, wherein said coil spring spacer member is disposed at a right angle relative to said louvers and is formed of a wire having a diameter;
reducing the distance between adjacent louvers of said blind so as to hold said offset ring portions in a clamped state such that a gap, corresponding to said wire diameter, is formed between said adjacent louvers;
washing said blind while maintaining said gap between said adjacent louvers;
removing said coil spring spacer member from said blind; and
drying said blind.

5,700,329
FILTER STANDPIPE FOR DISHWASHER
James M. Edwards, Kinston, and John E. Dries, Goldsboro, both of N.C., assignors to White Consolidated Industries, Inc., Cleveland, Ohio
Filed May 22, 1996, Ser. No. 653,942
Int. Cl.^{6} B08B *3/02*
U.S. Cl. 134—10 **13 Claims**

13. A method of operating a washer having a tub adapted for retaining articles to be washed therein; a sump container in fluid communication with said tub; a circulation pump having a pump inlet in fluid communication with at least one of said tub and said sump container and a pump outlet in fluid communication with said tub; an annular-shaped filter disposed in a flow path extending between said pump inlet and at least one of said tub and said sump

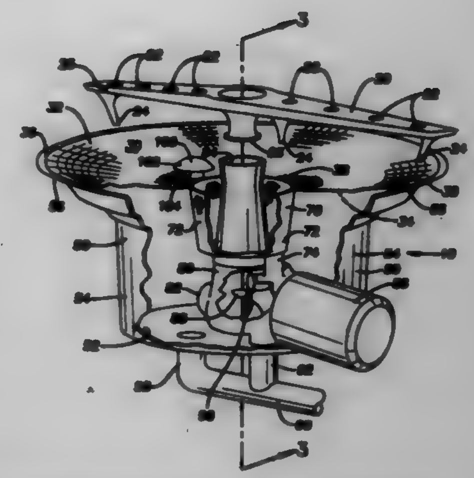

container, said filter providing an outer circular edge and an inner circular edge disposed below said outer edge; and a filter standpipe disposed proximate said inner edge of said filter and further disposed in said flow path parallel to said filter and having an inlet upstream of said filter, said inlet disposed at a height approximately the same as said outer edge of said filter, said method comprising the steps of:
filling liquid into the sump;
applying the liquid on the articles in the tub;
returning the liquid to the sump by flow of the liquid through the filter; and
returning the liquid to the sump by flow of the liquid through the standpipe when blockage of the filter causes a level of the liquid to rise above the filter to the standpipe inlet.

5,700,330
PROCESS FOR CLEANING WATER AND ORGANIC SOLVENT BASED LACQUER FROM EQUIPMENT USING A SINGLE SOLVENT MIXTURE
Wolfgang Stricker; Udo Hellmann, both of Remscheid, and Werner Stephan, Wuppertal, all of Germany, assignors to Herberts Gesellschaft mit beschrankter Haftung, Germany
Filed Jan. 11, 1996, Ser. No. 585,295
Claims priority, application Germany, Jan. 20, 1995, 195 01 661.0
Int. Cl.^{6} B08B *3/08;* **C11D** *7/50;* **C09D** *9/00*
U.S. Cl. 134—22.19 **4 Claims**

1. A process for cleaning equipment contaminated with a lacquer residue, comprising:
contacting the equipment, which has been contaminated with either an organic solvent-based lacquer residue or an aqueous-based lacquer residue, with a solvent mixture to remove the lacquer residue, wherein the solvent mixture consists essentially of:
A) 15–35 wt. % of one or more glycol ethers of the general formula I

$$OH-(CH_2-CH_2-O)_m-R_1 \qquad I$$

wherein R_1=C_{1-4}-alkyl and m= 1 or 2 and
B) 65–85 wt. % of one or more aliphatic ketones of the general formula II

$$R_2-\underset{\underset{O}{\|}}{C}-R_3 \qquad II$$

wherein R_2= C_{1-3}-alkyl and R_3= C_{1-3}=alkyl and R_2 and R_3 may be identical or different, and wherein the A)+B) wt. %'s add up to 100 wt. %.

5,700,331

THICKENED CLEANING COMPOSITION

Barbara Thomas, Princeton, and Karen Wisniewski, Bound Brook, both of N.J., assignors to Colgate-Palmolive Co., Piscataway, N.J.

Filed Jun. 14, 1996, Ser. No. 664,458

Int. Cl.^{6} B08B *3/04;* **C11D** *1/24;1/72;3/50*

U.S. Cl. 134—29 **3 Claims**

1. A cleaning composition which comprises by weight:

(a) about 1% to about 10% of an alkyl polyglucoside surfactant;
(b) about 4% to about 30% of a magnesium salt of a C_8–C_{16} alkyl benzene surfactant;
(c) about 0.1% to about 10% of an abrasive;
(d) about 1% to about 15% of a cosurfactant;
(e) about 0.2% to about 8% of a water insoluble organic compound selected from the group consisting of perfumes, essential oils and water insoluble hydrocarbons having about 8 to about 18 carbon atoms; and
(f) 0.1% to 4% of a polymeric thickener;
(g) 1% to 14% of an ethoxylated alkyl ether sulfate;
(h) the balance being water.

5,700,332

SEGREGATED TANDEM FILTER FOR ENHANCED CONVERSION EFFICIENCY IN A THERMOPHOTOVOLTAIC ENERGY CONVERSION SYSTEM

Edward J. Brown; Paul F. Baldasaro, both of Clifton Park, and Randolph J. Dziendziel, Middlegrove, all of N.Y., assignors to The United States of America as represented by the United States Department of Energy, Washington, D.C.

Filed Jul. 11, 1996, Ser. No. 678,741

Int. Cl.^{6} H02N *6/00;* **G02B** *5/28*

U.S. Cl. 136—253 **15 Claims**

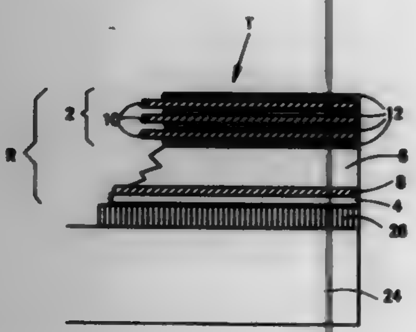

13. A thermophotovoltaic system, comprising:

a) a thermophotovoltaic cell;
b) a high mobility plasma filter bonded onto said thermophotovoltaic cell, said plasma filter being adapted to start to become reflecting at a wavelength of about $1.5\lambda_{IIF}$, where λ_{IIF} is approximately equal to said thermophotovoltaic cell bandgap wavelength λ_g;
c) an optically transparent substrate segregation layer disposed on top of said plasma filter, said segregation layer having at least one coherence length in optical thickness; and
d) a dielectric interference filter deposited on top of said substrate segregation layer, said interference filter being disposed toward the source of radiation, said interference filter including a plurality of alternating layers of high and low optical index materials adapted to change from transmitting to reflecting at a nominal wavelength λ_{IIF}, said interference filter being adapted to transmit incident radiation from about $0.5\lambda_{IIF}$ to λ_{IIF} and reflect from λ_{IIF} to about $2\lambda_{IIF}$.

5,700,333

THIN-FILM PHOTOELECTRIC CONVERSION DEVICE AND A METHOD OF MANUFACTURING THE SAME

Shunpei Yamazaki, Tokyo, and Yasuyuki Arai, Kanagawa, both of Japan, assignors to Semiconductor Energy Laboratory Co., Ltd., Kanagawa-ken, Japan

Filed Mar. 27, 1996, Ser. No. 623,336

Claims priority, application Japan, Mar. 27, 1995, 7-129864; Mar. 27, 1995, 7-129865; Apr. 11, 1995, 7-110121

Int. Cl.^{6} H01L *31/04;31/0368;31/18*

U.S. Cl. 136—258 **31 Claims**

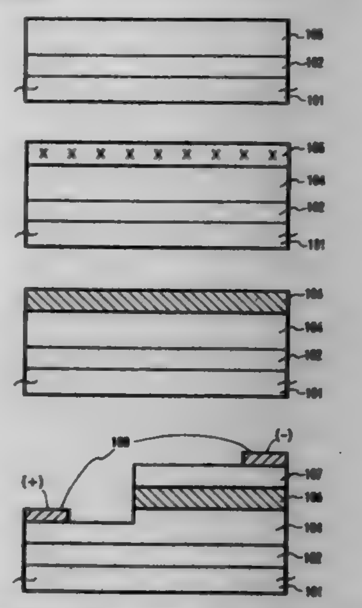

18. A method of manufacturing a photoelectric conversion device, comprising:

forming a metal layer on a substrate, said metal being a catalyst to promote crystallization of silicon;
depositing a non-single crystalline silicon semiconductor layer on said metal layer;
crystallizing said semiconductor layer by a heating process wherein said metal functions to promote crystallization of said semiconductor layer;
forming a phosphorus containing layer or region on or within said semiconductor layer after said crystallizing; and
heating said phosphorus containing layer or region and said crystallized semiconductor layer so that said phosphorus is activated to getter said metal.

21. A solar cell comprising:

a substrate;
a first crystalline silicon film of a first conductivity type on said substrate, having a metal catalyst element for promoting crystallization of silicon at a concentration not higher than 5×10^{18} atoms/cm^3; and
a second crystalline silicon film a second conductivity type that is different from said first conductivity type, said second crystalline silicon film being adjacent to said first crystalline silicon film.

5,700,334

COMPOSITION AND PROCESS FOR IMPARTING A BRIGHT BLUE COLOR TO ZINC/ALUMINUM ALLOY

Hitoshi Ishii, and Takao Ogino, both of Kanagawa-Ken, Japan, assignors to Henkel Corporation, Plymouth Meeting, Pa.

PCT No. PCT/US94/03691, § 371 Date Nov. 28, 1995, § 102(e) Date Nov. 28, 1995, PCT Pub. No. WO94/25640, PCT Pub. Date Nov. 10, 1994

PCT Filed Apr. 8, 1994, Ser. No. 535,253

Claims priority, application Japan, Apr. 28, 1993, 5-102824

Int. Cl.^{6} C23C *22/44*

U.S. Cl. 148—273 **17 Claims**

1. A process for imparting a bright blue color to a zinc/aluminum alloy surface that contains 0.1 to 60 weight % aluminum by treatment of the surface with an aqueous liquid treatment composition that has a pH of 3.5 to 6, that does not contain chromium, and that contains a molybdenum compound content of 0.2 to 3.0 weight % calculated as molybdenum and a fluoride content of 0.1 to 2.0 weight % calculated as fluorine.

5,700,335

PROCESS AND DEVICE FOR REGULATING THE CALORIFIC OUTPUT IN A CONTINUOUS ANNEALING AND PROCESSING LINE FOR CONTINUOUSLY CAST METAL PRODUCTS

Günther Phillip, Erlangen, Germany, assignor to Maschinenfabrik Niehoff GmbH & Co. KG, Schwabach, Germany

PCT No. PCT/EP93/02222, § 371 Date Apr. 5, 1995, § 102(e) Date Apr. 5, 1995, PCT Pub. No. WO94/04708, PCT Pub. Date Mar. 3, 1994

PCT Filed Aug. 19, 1993, Ser. No. 387,799

Claims priority, application Germany, Aug. 21, 1992, 42 27 812.0

Int. Cl.^{6} C21D *9/62*

U.S. Cl. 148—508 **22 Claims**

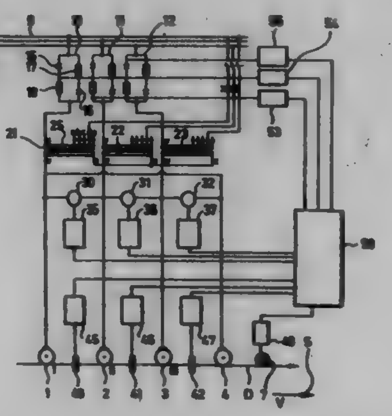

1. A process for regulating an annealing power in at least one annealing section of a continuous annealing and processing line for continuously cast metal products, comprising the steps of:

measuring a passing speed of the continuously cast metal products (D) passing through the continuous annealing and processing line and outputting a representative electrical signal by means of a first measuring system (7),
measuring an instantaneous voltage value on the annealing section and outputting a representative electrical signal by means of a second measuring system (30, 31, 32),
transforming the measured instantaneous voltage value into an effective voltage value (U_e), and
forming a control signal on the basis of the effective voltage value by means of a control unit (50) for changing a voltage supplied to the annealing section in order to obtain a predetermined annealing power value which is dependent on the speed measured,
characterized by the steps of
detecting a current flowing in at least one annealing section by means of a third measuring system (40, 41, 42),
digitizing and integrating the instantaneous voltage value or values at the annealing section in order to determine the effective voltage value for a respective short period of time each,
digitizing and integrating a measured instantaneous value of the annealing current in order to determine the corresponding effective value for the same respective short period of time as in the case of the annealing voltage, and
providing the control unit as a processor for multiplying the calculated effective values of the annealing voltage and the annealing current in order to calculate the annealing power actually supplied to the individual annealing section and to compare it with the predetermined annealing power.

5,700,336

BEAD CORE FOR A PNEUMATIC TIRE

Manfred Gerresheim, Obertshausen, Germany, assignor to SP Reifenwerke GmbH, Hanau, Germany

Filed Nov. 21, 1995, Ser. No. 561,025

Claims priority, application Germany, Nov. 25, 1994, 44 42 068.4

Int. Cl.^{6} B60C *15/04;15/05*

U.S. Cl. 152—540 **13 Claims**

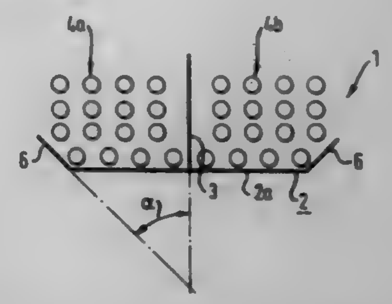

1. A bead core for a pneumatic tire, the bead core comprising a ring element and a reinforcement element wound onto the ring element to provide a load carrying winding, wherein the ring element includes a base and a stabilizing support wall extending substantially radially outwardly from the base to subdivide the load carrying winding into only two regions, wherein the base of the ring element has boundary walls at its axially outer regions, said boundary walls extending radially outwardly from the base and inclining axially outwardly so that each forms an included angle α between 0° and 90° exclusive with the support wall.

5,700,337

FABRICATION METHOD FOR COMPOSITE STRUCTURE ADAPTED FOR CONTROLLED STRUCTURAL DEFORMATION

Jack H. Jacobs, St. Louis, Mo.; Matthew M. Thomas, Madison, Ill.; Duane D. Grosskrueger, Highlands Ranch; Bernie F. Carpenter, Littleton, both of Colo., and Alan R. Perry, Morrison, Colo., assignors to McDonnell Douglas Corporation, St. Louis, Mo., and Lockheed Martin Corporation, Bethesda, Md.

Filed Mar. 1, 1996, Ser. No. 609,468

Int. Cl.^{6} B32B *31/00*

U.S. Cl. 156—64 **10 Claims**

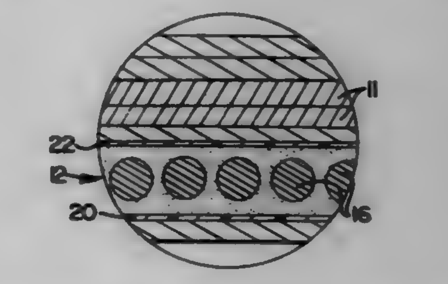

1. A method of fabricating a composite structure adapted for controlled structural deformation, the method comprising the steps of:

forming a shape memory alloy component, wherein said forming step comprises the step of adhering a shape memory alloy tendon between a pair of electrically insulating face sheets, and wherein the shape memory alloy tendon has a relaxed shape at temperatures below a predetermined transition temperature and a contracted shape at temperatures above the predetermined transition temperature;
embedding the shape memory alloy component within a plurality of composite material layers such that the shape memory

alloy tendon is electrically isolated from the surrounding composite material layers; and
establishing electrical communication with the shape memory alloy tendon of the embedded shape memory alloy component such that subsequent actuation of the shape memory alloy tendon by raising the temperature of the shape memory alloy tendon above the predetermined transition temperature creates a controlled structural deformation of both the embedded shape memory alloy component and the surrounding composite material layers.

5,700,338

METHOD OF MANUFACTURING RESISTOR INTEGRATED IN SINTERED BODY AND METHOD OF MANUFACTURING MULTILAYER CERAMIC ELECTRONIC COMPONENT

Noriyuki Kubodera, Shiga-ken, and Yoshiaki Kouno, Moriyama, both of Japan, assignors to Murata Manufacturing Co., Ltd., Nagaokakyo, Japan

Filed Jun. 13, 1995, Ser. No. 490,089

Claims priority, application Japan, Jun. 14, 1994, 6-131900

Int. Cl.⁶ B32B *31/26;31/12;* **H05K** *3/20*

U.S. Cl. 156—89 **16 Claims**

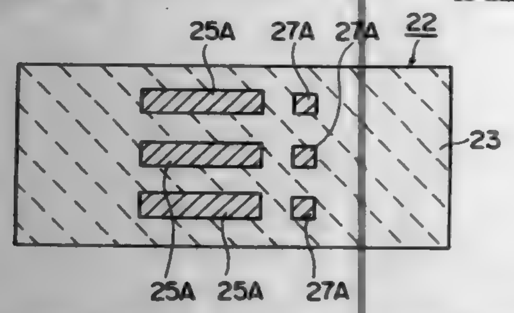

1. A method of manufacturing a resistor integrated in a sintered body, comprising the steps of:
preparing a metal thin film transfer material having a carrier substrate and a plurality of metal thin films formed on said carrier substrate to be in a prescribed pattern;
obtaining a laminate of said metal thin films obtained from said metal thin film transfer material and ceramic green sheets; and
firing said laminate for obtaining a sintered body and forming a resistor consisting of said metal thin films in said sintered body, wherein said plurality of metal thin films are alloyed during the firing of said laminate, for forming said resistor.

5,700,339

PROCESS FOR THE MANUFACTURE OF A TIRE HAVING A CARCASS REINFORCEMENT WHICH IS FORMED OF AT LEAST ONE PLY OF CORDS OR CABLES

Jean Billieres, Clermont-Ferrand, France, assignor to Compagnie Generale des Etablissements Michelin - MICHELIN & CIE, Clermont-Ferrand Cedex, France

PCT No. PCT/EP94/01841, § 371 Date Dec. 21, 1995, § 102(e) Date Dec. 21, 1995, PCT Pub. No. WO95/00322, PCT Pub. Date Jan. 5, 1995

PCT Filed Jun. 7, 1994, Ser. No. 569,103

Claims priority, application France, Jun. 25, 1993, 93 07879

Int. Cl.⁶ B29D *30/16*

U.S. Cl. 156—117 **11 Claims**

1. A process for manufacturing a tire having a carcass reinforcement formed of at least one ply comprising helically winding a cord or cable around a non-deformable, non-disassemblable annular monobloc core having a meridian section the profile of which, in its sidewall and bead portions, is parallel to the meridian profile of the innermost carcass ply as it is in the vulcanization mold for the tire, circumferentially cutting the at least one ply of carcass

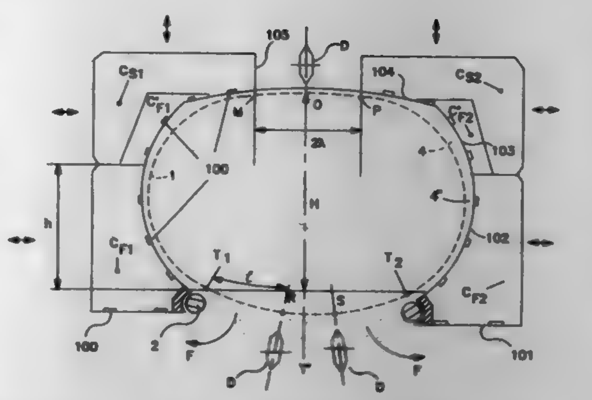

reinforcement to obtain two blank halves, separating axially the two blank halves by moving apart coaxial metal shells having inner walls with means for grasping, supporting and handling the carcass reinforcement in the region of the sidewalls and which inner walls present a meridian profile of the outermost carcass reinforcement ply, the axial separation permitting removal of the core, and displacing the two blank halves axially towards each other for connection after removal of the core.

5,700,340

METHOD OF MANUFACTURING A TAPE HAVING A SUCCESSION OF SURFACE-TYPE FASTENER PIECES

David Johnson, St. Helens, and James Ashman, Runcorn, both of England, assignors to YKK Corporation, Tokyo, Japan

Filed Oct. 20, 1994, Ser. No. 326,364

Claims priority, application United Kingdom, Oct. 22, 1993, 9321858

Int. Cl.⁶ B32B *31/00*

U.S. Cl. 156—152 **8 Claims**

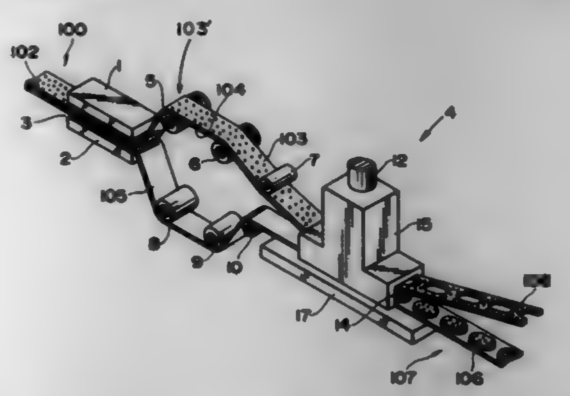

1. A method of manufacturing a continuous elongated tape having a succession of surface type fastener pieces of a desired contour adhered thereto from a continuous elongated surface-type fastener tape blank comprising an elongated release sheet and an elongated surface-type fastener tape adhered to the release sheet by an adhesive layer, the elongated surface-type fastener tape having a multiplicity of fastening elements provided on one surface; the method comprising the steps of:
(a) intermittently feeding the continuous elongated surface-type fastener tape blank along a feed path to a cutting station;
(b) progressively separating the continuous elongated surface-type fastener tape blank into the elongated surface-type fastener tape having the adhesive layer on one surface thereof and the release sheet immediately before the cutting station;
(c) repeatedly severing the elongated surface-type fastener tape having the adhesive layer on said one surface into a multiplicity of surface-type fastener pieces of desired contour having an adhesive layer on one surface thereof at the cutting station, and simultaneously separating said surface type fastener pieces from a remaining scrap tape while intermittently feeding the elongated surface-type fastener tape through the cutting station; and
(d) repeatedly applying the thus provided multiplicity of surface-type fastener pieces of desired contour to the release sheet by the adhesive layers, while intermittently feeding the elongated release sheet.

5,700,341

METHODS FOR REDUCING SURFACE FRICTION IN FIBER OPTIC DISPENSERS

Michael L. Steelman, Fayetteville, and Calvin W. Long, Tullahoma, both of Tenn., assignors to The United States of America as represented by the Secretary of the Army, Washington, D.C.

Filed Dec. 23, 1996, Ser. No. 778,062

Int. Cl.⁶ B65H *81/00;55/04*

U.S. Cl. 156—172 **1 Claim**

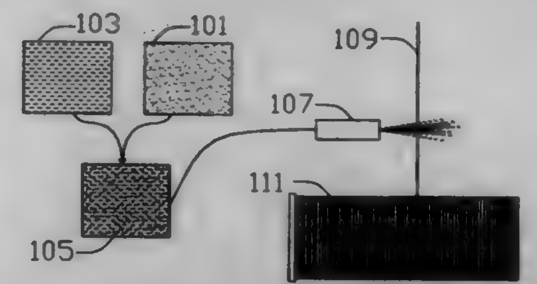

1. A method for reducing surface friction in a fiber optic dispenser during payout, said method being practiced while the fiber is initially being wound onto the dispenser and comprising the steps of:
a) coating hexagonal boron nitride powder with a pre-selected surfactant;
b) mixing the coated hexagonal boron nitride powder with an uncured, pressure-sensitive adhesive solution to create a composite sprayable solution, said coating step promoting bonding between the boron nitride powder and the adhesive solution;
c) spraying the composite solution onto each successive layer of fiber optic as the fiber is wound onto the dispenser; and
d) curing the fiber optic dispenser upon completion of the winding of the fiber onto the dispenser.

5,700,342

COMPOSITE ENCLOSURE FOR ELECTRONIC HARDWARE

William Bernard Giannetti, Fall River, Mass., assignor to Simmonds Precision Products Inc., Richfield, Ohio

Division of Ser. No. 86,273, Jun. 30, 1993, abandoned. This application Jun. 6, 1995, Ser. No. 469,944

Int. Cl.⁶ B29C *69/00;70/00;* **B32B** *31/18*

U.S. Cl. 156—245 **8 Claims**

1. A method for making a unibody enclosure for electronic modules comprising the steps of:
a. laying up uncured carbon and resin layers in a mold;
b. laying up additional uncured carbon and resin layers in the mold;
c. performing a single step cure by applying heat and pressure to the materials in the mold to form said enclosure;
d. laying up a plurality of carbon and resin laminates to form a first composite block and then curing said first composite block;
e. cutting said block into a plurality of segments,
f. joining said segments together to form a second block;
g. cutting said second block to form a plurality of guide ribs integral with a cold wall; and

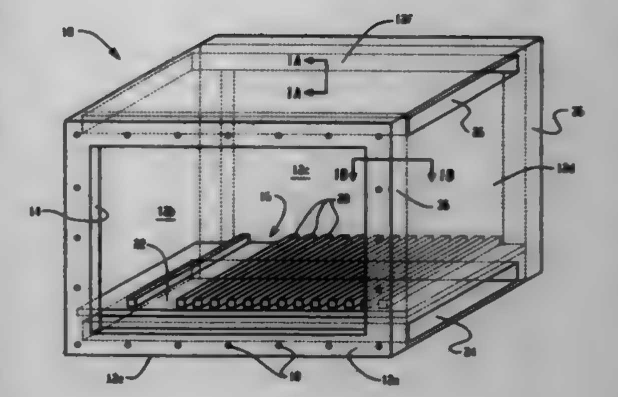

h. mounting the finished cold wall and ribs in said enclosure.

5,700,343

PREPARATION OF CYLINDRICAL BLANKET BY SPREADING OF COMPRESSIBLE LAYER

Francesco Castelli, and Gianpiero Invernizzi, both of Lodi, Italy, assignors to Reeves Brothers, Inc., Spartanburg, S.C.

Filed Jan. 16, 1996, Ser. No. 586,516

Int. Cl.⁶ B05D *3/06*

U.S. Cl. 156—295 **19 Claims**

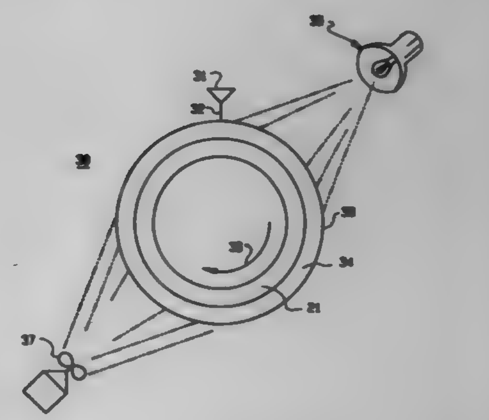

1. A method of manufacturing a cylindrical, compressible laminate, which comprises,
applying a first reinforcing layer onto a cylindrical sleeve;
spreading a compressible layer onto the first reinforcing layer by rotating the sleeve under a coating system, which system includes a coating head and a knife blade, by applying an elastomeric matrix coating containing a plurality of open or closed cells onto the first reinforcing layer of the laminate via the coating head as the sleeve is rotating while utilizing the knife blade to control the thickness and uniformity of the applied elastomeric matrix coating to form the compressible layer thereon, wherein the compressible layer is applied in portions by incrementally raising the knife blade on each rotation of the sleeve until a compressible layer of a desired thickness is obtained;
heating that portion of compressible layer which is applied during one rotation of the sleeve before subsequent portions are applied to at least partially cure the elastomeric matrix coating;
applying a surface layer; and
curing the layers to form a cured cylindrical compressible laminate on the sleeve.

5,700,344
BIODEGRADABLE/COMPOSTABLE HOT MELT ADHESIVES COMPRISING POLYESTER OF LACTIC ACID

Garry J. Edgington, White Bear Lake, and Christopher M. Ryan, Dayton, both of Minn., assignors to H. B. Fuller Licensing & Financing Inc., St. Paul, Minn.

Continuation of Ser. No. 632,918, Apr. 16, 1996, abandoned, which is a continuation of Ser. No. 136,670, Oct. 15, 1993, abandoned. This application Jan. 21, 1997, Ser. No. 779,291
Int. Cl.[6] C09J *167/04;* **C08L** *67/04;* **C08K** *5/12;* **C08F** *120/26*
U.S. Cl. 156—336 **25 Claims**

1. A method of using a biodegradable/compostable composition as a hot melt adhesive comprising the steps of:
I. providing a composition comprising:
a) about 10–50 wt-% of biodegradable/compostable thermoplastic resin having a molecular weight (Mn) greater than about 30,000 grams per mole; and
b) about 20–90 wt-% of a biodegradable tackifying resin composition comprising a polylactic acid composition having a molecular weight (Mn) of less than about 20,000 grams per mole and a T_g of less than about 60° C.
II. applying the adhesive to at least one substrate; and
III. forming a bond among the substrates.

5,700,345
CONTINUOUS STRUCTURE FORMING APPARATUS

LeRoy Payne, 3300 Nicholas La., Molt, Mont. 59057

Division of Ser. No. 345,565, Nov. 25, 1994, Pat. No. 5,543,006, which is a continuation-in-part of Ser. No. 239,540, May 9, 1994, Pat. No. 5,496,434, which is a continuation-in-part of Ser. No. 870,927, Apr. 20, 1992, Pat. No. 5,330,603, which is a continuation-in-part of Ser. No. 753,344, Aug. 30, 1991, Pat. No. 5,145,282, which is a continuation-in-part of Ser. No. 521,442, May 10, 1990, Pat. No. 5,049,006, which is a continuation-in-part of Ser. No. 417,501, Oct. 5, 1989, Pat. No. 4,955,760, which is a continuation-in-part of Ser. No. 235,205, Aug. 23, 1988, Pat. No. 4,872,784. This application Aug. 5, 1996, Ser. No. 691,904
Int. Cl.[6] B32B *31/06;31/12*
U.S. Cl. 156—356 **5 Claims**

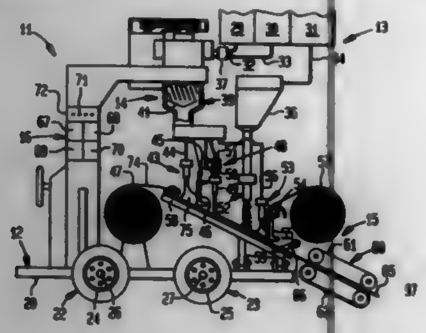

1. Mobile continuous structure forming apparatus including a supporting portion, a raw material supplying portion, a mixing portion, a matrix forming portion and a control portion; said supporting portion including at least one base section, carriage means operatively associated with said base section; said raw material supplying portion including a plurality of reservoirs operatively connected with said supporting portion, said reservoirs being connected independently with said mixing portion through flexible conduit means; said mixing portion including a generally vertically oriented elongated mixing chamber mounted on said base section, a rotatable mixing element disposed within said mixing chamber; said matrix forming portion including first mixture distributing means disposed below a first outlet of said mixing chamber including a first elongated barrier member disposed closely adjacent to a matrix forming path through said apparatus and substantially perpendicular thereto, filament distributing means including an orifice disposed below a second outlet of said mixing chamber and operatively connected thereto, additive particle distributing means disposed subsequent to said filament distributing means, second mixture distributing means including a second elongated barrier member disposed below a third outlet of said mixing chamber, a shallow tray member disposed below said distributing means and below said matrix forming path through said apparatus, pressure applying means disposed subsequent to said second mixture distributing means; said control portion including programmable memory means, coordinating means, sensing means, actuating means and circuitry transmitting signals from said sensing means to said coordinating means for comparison with said memory means and activation of said actuating means to form a continuous resin structure.

5,700,346
AUTOMATED SLIDE STAINING SYSTEM

Peter S. Edwards, 2464 Elfinwing La., Tallahassee, Fla. 32308

Filed Jul. 19, 1994, Ser. No. 277,170
Int. Cl.[6] B05B *12/02*
U.S. Cl. 156—357 **28 Claims**

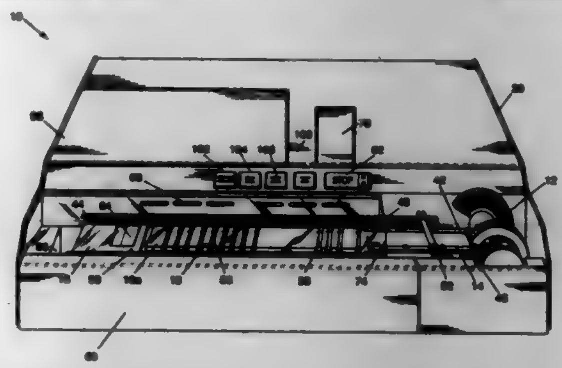

1. An automated slide staining system comprising in combination:
a slide storage device for holding a plurality of slides with each slide having a tissue specimen thereon, the slide storage device being acurate in shape and having a horizontally disposed central axis, the slide storage device further having a plurality of radially oriented walls for forming a plurality of compartments, each compartment for holding a slide for subsequent individual transfer;
a plurality of slide staining stations offset from the slide storage device and being horizontally disposed in a single file relationship for urging sequential capillary communication with each transferred slide, each staining station further having an aperture for dispensing a staining fluid into a capillary formed between an underside of the slide and upper surface of each staining station;
a slide receptacle for receiving a stained slide after a complete transverse of the slide staining stations;
a slide transport apparatus therebetween, the apparatus being adapted for receiving and removing an individual unstained slide from the compartment and further, for transporting the unstained slide horizontally on a belt for urging approximate capillary communication between an underside of each slide and an upper surface of each staining station;
a plurality of containers for storing the respective staining fluids, each container being in hydraulic communication with a cannula tube for urging withdrawal by the cannula tube, each container further being box-like in shape for forming a rectangular carton for urging easy changing of the staining fluids after a preselected number of slides have been stained;
an exhaust fan disposed rearwardly and adjacent to the slide transport apparatus for removing fumes generated by the staining fluids during the dispensing cycle; and
the slide transport apparatus further includes a speed controller to vary the time a slide takes to traverse each staining station for changing the intensity and contrast of the stain with respect to the tissue specimen.

5,700,347
THERMOPLASTIC MULTI-TAPE APPLICATION HEAD

Peter D. McCowin, Enumclaw, Wash., assignor to The Boeing Company, Seattle, Wash.

Filed Jan. 11, 1996, Ser. No. 585,362
Int. Cl.[6] B65H *81/00*
U.S. Cl. 156—425 **18 Claims**

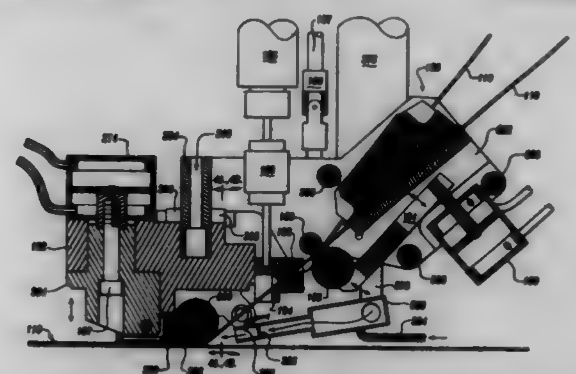

1. A thermoplastic head for simultaneously laying down thermoplastic resin-impregnated tape from at least two spools of tape to form a composite, the head comprising:
(a) a mandrel requiring a force for rotation, the force controlled by a clutch, the force sufficient to controlledly tension tape unwound from at least two spools of tape rotatably mounted on the mandrel;
(b) a tape guide assembly, the assembly comprising at least two side-by-side guide channels, the channels sized to match the width of tape supplied from the at least two spools of tape on the mandrel, the assembly comprising spacing adjusters for adjusting spacings between the guide channels;
(c) a compression roller assembly comprising a rotatable compression roller mounted with a longitudinal axis thereof transverse to a direction of lay down of tape from the guide assembly, the rotatable compression roller comprising an axial shaft having first and second ends extending outwardly from each end of the roller, the first end of the shaft being smooth, and the second end comprising a circumferential ring the roller urged toward a workpiece whereon tape is laid down so that tape passing beneath the roller is urged towards the workpiece;
(d) a pneumatic cylinder in communication with the compression roller for controlledly urging the roller toward the workpiece;
(e) a heater assembly comprising an electrical resistance heater for heating an inert gas, and a plenum in fluid communication therewith, the plenum having a transverse nozzle therein approximating the length of the compression roller, the heater assembly mounted near the compression roller so that hot air exiting from the nozzle of the heater impinges on and heats tapes being laid down by the compression roller; and
(f) a post-compression foot behind the compression roller to apply pressure to laid down tape.

5,700,348
METHOD OF POLISHING SEMICONDUCTOR SUBSTRATE

Michio Sakurai, Tokyo, Japan, assignor to NEC Corporation, Japan

Continuation of Ser. No. 354,284, Dec. 12, 1994, abandoned. This application Dec. 3, 1996, Ser. No. 758,761
Claims priority, application Japan, Dec. 15, 1993, 5-342852
Int. Cl.[6] H01L *21/00;* **B24B** *1/00*
U.S. Cl. 156—636.1 **7 Claims**

1. A polishing method of chemically and mechanically polishing an insulating film of a silicon semiconductor substrate which comprises the insulating film on one surface thereof and silicon exposed to the outside at the other surface thereof, comprising the steps of:

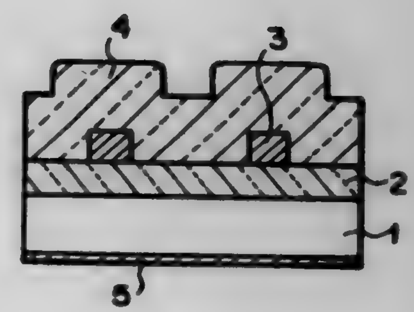

forming a hydrophilic thin film by O_2-plasma treatment on the silicon surface exposed to the outside;
polishing said insulating film by a chemical and mechanical polishing treatment after said hydrophilic thin film is formed; and
removing abrasive grains adhering to the surface of the substrate by a scrubbing treatment.

5,700,349
METHOD FOR FORMING MULTI-LAYER INTERCONNECTIONS

Masanori Tsukamoto, and Tetsuo Gocho, both of Kanagawa, Japan, assignors to Sony Corporation, Tokyo, Japan

Filed Jan. 16, 1996, Ser. No. 585,772
Claims priority, application Japan, Jan. 20, 1995, 7-007072
Int. Cl.[6] H01L *21/00*
U.S. Cl. 156—657.1 **16 Claims**

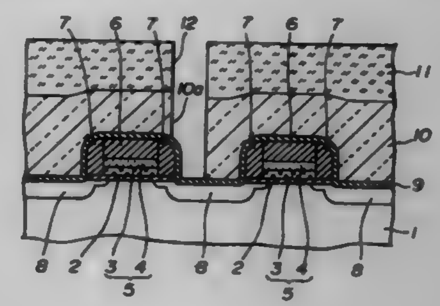

1. A method of forming a semiconductor device having a multilayer interconnection in which through-holes are formed in an interlayer insulating layer positioned between two neighboring mid interconnection layers, which through-holes are used for establishing an electrical interconnection between upper and lower interconnection layers, comprising the steps of:
forming an offset insulating film on said mid interconnection layer such that the patterns of the mid interconnection layer and the offset insulating film are the same;
forming a sidewall insulating film on a lateral wall surface of a pattern made up of said mid interconnection layer and the offset insulating film;
substantially conformally forming an etching stop layer covering the entire surface of the semiconductor device, said etching stop layer being slower in etch rate than said interlayer insulating layer;
forming the insulating film so as to be substantially planer and so as to cover the entire surface of said semiconductor device for completing a through hole; and
anisotropically etching said interlayer insulating layer in a region having an opening size smaller than the spacing between the interconnecting layers;
selectively removing the etching stop layer exposed on the bottom surface of said region for completing the through-hole; and
filling said through-hole with an electrically conductive material.

5,700,350

PROCESSES OF RETAINING CHELANT-CONTAINING EFFLUENT WITHIN PULP BLEACH PLANTS

Ruijin Guo, Vancouver, Canada, assignor to Chemetics International Company Ltd., Vancouver, Canada

Filed Mar. 28, 1996, Ser. No. 623,360

Int. Cl.[6] D21C *11/00*

U.S. Cl. 162—29 5 Claims

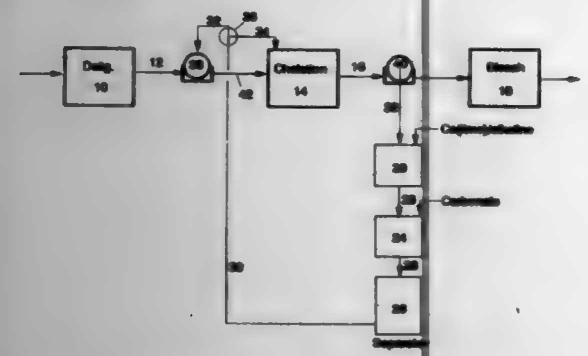

1. A method of removing transition metals from a transition metal-containing digested pulp slurry wherein said digested pulp is to be bleached in a subsequent bleaching step, and wherein said metals are removed by a chelating agent in a chelating agent closed re-cycle process; said method comprising

(a) treating a pulp slurry in an acidic or near neutral stage with an effective chelating amount of a chelating agent to form a soluble, chelated metal species;
(b) removing said pulp to provide a chelated metal species-containing solution;
(c) treating said solution in an alkaline stage in the presence of sufficient Ca ions with an effective amount of an alkaline liquor to effect displacement of said metals from said chelated metal species and precipitation of said metals as solids in said alkaline solution;
(d) removing said solids from said alkaline solution to provide a metal-free, chelating agent-containing solution; and
(e) recycling said chelating agent-containing solution to said pulp slurry of step (a), wherein said sufficient calcium is, at least, an amount equimolar to said chelating agent in said metal species containing solution, and provided by Ca-containing chemicals.

5,700,351

ANTIFOAMS BASED ON OIL-IN-WATER EMULSIONS FOR THE PAPER INDUSTRY

Rudolf Schuhmacher, Boehl-Iggelheim; Gabriele Dralle-Voss, Darmstadt; Knut Oppenlaender, Ludwigshafen; Brigitte Wegner, Roemerberg, and Andreas Hohmann, Ludwigshafen, all of Germany, assignors to BASF Aktiengesellschaft, Ludwigshafen, Germany

PCT No. PCT/EP93/02531, § 371 Date Feb. 6, 1995, § 102(e) Date Feb. 6, 1995, PCT Pub. No. WO94/08091, PCT Pub. Date Apr. 14, 1994

PCT Filed Sep. 18, 1993, Ser. No. 379,442

Claims priority, application Germany, Sep. 28, 1992, 42 32 415.7

Int. Cl.[6] D21H *21/12;* B01D *19/04*

U.S. Cl. 162—75 15 Claims

1. An oil-in-water emulsion comprising an oil phase and an aqueous phase in which the oil phase accounts for from 5 to 50% by weight of the emulsion and said oil phase consists essentially of a mixture of

(a) fatty esters of C_{12}–C_{22}-carboxylic acids with monohydric to trihydric C_1–C_{22}-alcohols,
(b) polyglyceryl esters which are obtainable by at least 20% esterification of polyglycerols which contain at least 2 glyceryl units with at least one C_{12}–C_{36}-fatty acid and
(c) fatty esters of C_{12}–C_{22}-carboxylic acids and polyalkylene glycols, the molecular weight of the polyalkylene glycols being up to 5,000 g/mol, and, if required,
(d) alcohols of at least 12 carbon atoms, fatty esters of alcohols of at least 22 carbon atoms and C_1–C_{36}-carboxylic acids, distillation residues which are obtainable in the preparation of alcohols having a relatively large number of carbon atoms by oxo synthesis or by the Ziegler process and which may be alkoxylated, or a mixture of the stated compounds or
(e) hydrocarbons having a boiling point above 200° C. or fatty acids of 12 to 22 carbon atoms.

2. A method for foam control in pulp digestion, in the beating of paper stock, in papermaking and in dispersing pigments for papermaking, comprising:

adding the oil-in-water emulsion of claim 1 in an amount of from 0.02 to 0.5 part by weight per 100 parts by weight of a foam-forming medium.

5,700,352

PROCESS FOR INCLUDING A FINE PARTICULATE FILLER INTO TISSUE PAPER USING AN ANIONIC POLYELECTROLYTE

Kenneth Douglas Vinson, Cincinnati, and Howard Thomas Deason, Hamilton, both of Ohio, assignors to The Procter & Gamble Company, Cincinnati, Ohio

Filed Apr. 3, 1996, Ser. No. 627,855

Int. Cl.[6] D21H *17/67*

U.S. Cl. 162—111 23 Claims

1. A process for incorporating a fine non-cellulosic particulate filler into a creped tissue paper, said process comprising the steps of:

a) contacting an aqueous dispersion of a non-cellulosic particulate filler with an aqueous dispersion of an anionic polyelectrolyte polymer,
b) mixing the aqueous dispersion of polymer-contacted filler with papermaking fibers forming an aqueous papermaking furnish comprising polymer-contacted filler and papermaking fibers,
c) contacting said aqueous papermaking furnish with a cationic retention aid,
d) forming an embryonic paper web from the aqueous papermaking furnish on foraminous papermaking clothing,
e) removing water from said embryonic web to form a semi-dry papermaking web,
f) adhering the semi-dry papermaking web to a Yankee dryer and drying said web to a substantially dry condition,
g) creping the substantially dry web from the Yankee dryer by means of a flexible creping blade, thereby forming a creped tissue paper.

wherein said particulate filler comprises from about 1% to about 50% of the total weight of said creped tissue paper, said particulate filler selected from the group consisting of clay, calcium carbonate, titanium dioxide, talc, aluminum silicate, calcium silicate, alumina trihydrate, activated carbon, calcium sulfate, glass microspheres, diatomaceous earth, and mixtures thereof; and

wherein said anionic polyelectrolyte polymer comprises from about 0.05% to about 2% by weight based on the weight of said particulate filler, and wherein said anionic polyelectrolyte polymer has a charge density of from about 0.2 to about 7 milliequivalents per gram of polymer.

5,700,353

PAPER STRENGTHENED WITH SOLUBILIZED COLLAGEN AND METHOD

Kenneth E. Hughes, Gahanna; David C. Masterson, Grove City; David J. Fink, Shaker Heights; Barbara A. Metz, Baltimore; Gordon E. Pickett, Reynoldsburg; Paul M. Gemmer, Columbus, and Richard S. Brody, Worthington, all of Ohio, assignors to Ranpak Corporation, Concord, Ohio

Division of Ser. No. 250,806, May 27, 1994, abandoned, which is a continuation-in-part of Ser. No. 78,932, Jun. 16, 1993, Pat. No. 5,316,942. This application Jun. 7, 1995, Ser. No. 477,256

Int. Cl.[6] D21H *17/00;17/22*

U.S. Cl. 162—143 19 Claims

1. A paper product comprising soluble collagen, said product being formed by a process comprising the steps of:

a. reacting insoluble collagen with a proteolytic enzyme to produce a solution including soluble collagen having a number average weight of at least 300,000 daltons:
b. withdrawing the soluble collagen as product; and
c. using said soluble collagen in a paper-making process.

5,700,354

PAPER STRENGTHENED WITH SOLUBILIZED COLLAGEN AND METHOD

Kevin M. Virnelson, Mayfield Hts.; Kenneth E. Hughes, Gahanna; David C. Masterson, Grove City; David J. Fink, Shaker Hts.; Barbara A. Metz, Baltimore; Gordon E. Pickett, Reynoldsburg; Paul M. Gemmer, Port Clinton, and Richard S. Brody, Worthington, all of Ohio, assignors to Ranpak Corp., Concord Township, Ohio

Continuation-in-part of Ser. No. 250,806, May 27, 1994, abandoned, and Ser. No. 78,932, Jun. 16, 1993, Pat. No. 5,316,942. This application Jun. 7, 1995, Ser. No. 479,175

Int. Cl.[6] D21H *17/22;17/00*

U.S. Cl. 162—143 10 Claims

1. A collagen strengthened cellulosic product made by a process comprising:

a. adding soluble collagen solids having a number average molecular weight of at least 300,000 daltons to a cellulosic pulp slurry in a paper machine in an amount of about 0.2% to about 1.0% soluble collagen solids as compared to pulp solids and at a pH of addition of about 4.0 to 7.0 based on the final pulp slurry pH;
b. mixing said soluble collagen and said slurry to form a collagen/pulp slurry;
c. forming a cellulosic product of desired shape from said collagen/pulp slurry; and
d. drying said product.

5,700,355

CHIP FEEDING FOR A CONTINUOUS DIGESTER

J. Robert Prough, Queensbury, N.Y., assignor to Ahlstrom Machinery Inc., Glens Falls, N.Y.

Division of Ser. No. 267,171, Jun. 16, 1994, Pat. No. 5,476,572. This application Oct. 24, 1995, Ser. No. 547,159

Int. Cl.[6] D21C *7/06;7/08;* B65D *88/26*

U.S. Cl. 162—246 11 Claims

1. A feed chute assembly for a slurry of comminuted cellulosic fibrous material composing:

a vessel having a top section which is basically circular in cross-section, a tapered converting area that has a generally racetrack oval-type configuration and extends from said top section to a bottom section having a bottom opening generally circular in cross-section with a diameter of about 10–40% the diameter of the top section, and a bottom section transition between said tapered converting area and said bottom opening;

said bottom opening directly connected to an inlet for a pump for pumping the slurry; and

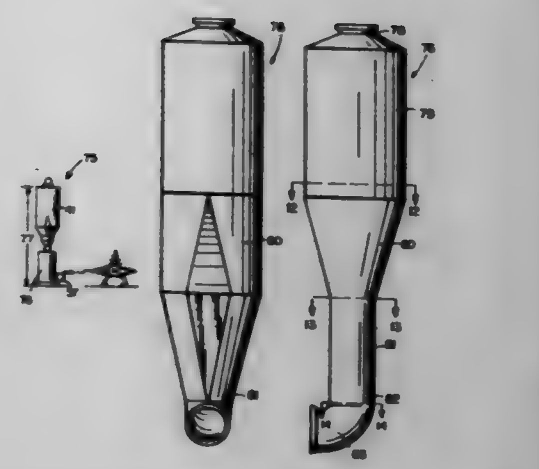

wherein said vessel has one dimensional convergence and side relief.

5,700,356

AIR PERMEABLE BELT FOR DEWATERING WEB IN PRESS NIP

Leonard R. Lefkowitz, 14 Alpine Dr., Latham, N.Y. 12110

Filed Jan. 19, 1996, Ser. No. 582,345

Int. Cl.[6] D21F *3/00*

U.S. Cl. 162—358.1 15 Claims

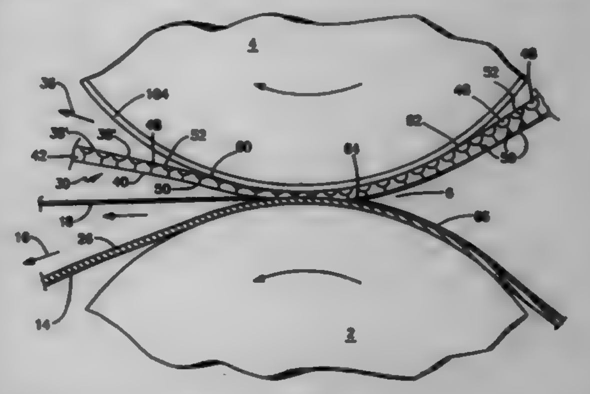

1. An endless belt for a press section, consisting essentially of a first surface an opposite second surface, and a body portion, said body portion being permeable to pressurized gas and substantially impermeable to liquid, said body portion having a first portion adjacent said first surface and a second portion adjacent said second surface, said first portion comprising a plurality of air cavities adjacent and exposed to said first surface, and said second portion comprising a plurality of passageways, each passageway of said plurality of passageways being dimensioned to be permeable to pressurized gas and substantially impermeable to liquid, and extending from said second surface to a select air cavity of said plurality of air cavities.

5,700,357

MECHANICAL BLANKET CLAMP IN ROTATING HEAD ASSEMBLY

James J. Didier, Beloit, Wis., assignor to Beloit Technologies, Inc., Wilmington, Del.

Filed Oct. 16, 1996, Ser. No. 733,045

Int. Cl.[6] D21F *3/02*

U.S. Cl. 162—358.3 34 Claims

1. A press apparatus for a papermaking machine comprising:

a rotatably mounted backing roll;

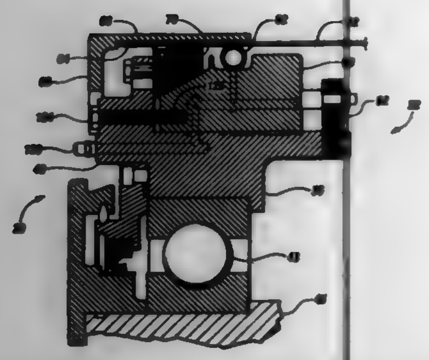

an elongated concave shoe, the shoe being urged toward the backing roll to define an extended nip therebetween for the passage therethrough of a paper web;
a blanket defining an endless loop, wherein the blanket extends through the nip such that the web is disposed between the blanket and the backing roll, the blanket having a first lateral edge and a second lateral edge spaced in the cross machine direction from the first lateral edge;
at least one head mounted for rotation about an axis with respect to the shoe, wherein the head has an outwardly facing generally cylindrical surface;
a clamp ring having an inwardly facing generally cylindrical surface adjacent the head outwardly facing cylindrical surface, the clamp ring being coaxial with the head, and mounted on the head for axial displacement thereon;
portions of the clamp ring which define a generally frustoconical wedge surface spaced radially outwardly from the clamp ring inwardly facing surface;
a plurality of wedge segments engaged with the clamp ring wedge surface, wherein each wedge segment has an inclined surface which engages with the clamp ring wedge surface such that axial displacement of the clamp ring with respect to the head causes the simultaneous radial displacement of all wedge segments; and
a generally cylindrical head ring which is substantially coaxial with the head and which has portions which encircle the wedge segments, and which is fixed to the head, wherein portions of the blanket extend between the wedge segments and the head ring, and wherein the clamp ring is selectably positionable to alternatively cause the wedge segments to fixedly clamp the blanket to the head, and to release the blanket from engagement with the head for removal from the apparatus.

5,700,358
RECOVERY OF CAPROLACTAM FROM OLIGOMERS AND/OR POLYMERS OF CAPROLACTAM
Hugo Fuchs; Josef Ritz, both of Ludwigshafen, and Gerald Neubauer, Weinheim, all of Germany, assignors to BASF Aktiengesellschaft, Ludwigshafen, Germany
Filed Mar. 1, 1995, Ser. No. 396,623
Claims priority, application Germany, Mar. 4, 1994, 44 07 222.8
Int. Cl.⁶ B01D *3/34;* **C07D** *201/16*
U.S. Cl. 203—31 **6 Claims**

1. A process for recovering caprolactam from oligomers or polymers of caprolactam by cleavage of oligomers or polymers of caprolactam and subsequent working up by distillation of the caprolactam obtained in the cleavage, which comprises
(a) cleaving oligomers or polymers of caprolactam to obtain an aqueous reaction mixture which contains caprolactam,
(b) removing water from the reaction mixture obtained under (a) to obtain a residue,
(c) distilling the residue obtained under (b) in an acidic medium and
(d) then distilling distillate obtained in (c) in an alkaline medium to obtain caprolactam, or
(c') distilling the residue obtained under (b) in an alkaline medium and
(d') then distilling distillate obtained in (c') in an acidic medium to obtain caprolactam;
wherein forerunnings are taken off in the distillation in the acidic or alkaline medium and are separated by distillation into a low-boiling fraction, which is fed to an incineration plant, and a bottom fraction, which is recycled to the distillation (c) or (d') in acidic medium; and wherein residue obtained in the distillation in the alkaline medium is separated by distillation and distillate obtained here in (c') being recycled to the distillation (d') in the acidic medium.

5,700,359
METHOD OF POLARIZING AT LEAST ONE LARGE AREA SHEET OF FERROELECTRIC MATERIAL
François Bauer, Saint-Louis, France, assignor to Institut Franco Allemand de Recherches de Saint-Louis, Saint-Louis Cedex, France
Filed Feb. 20, 1996, Ser. No. 604,027
Claims priority, application France, Feb. 17, 1995, 95 01868
Int. Cl.⁶ H04R *17/00*
U.S. Cl. 204—164 **14 Claims**

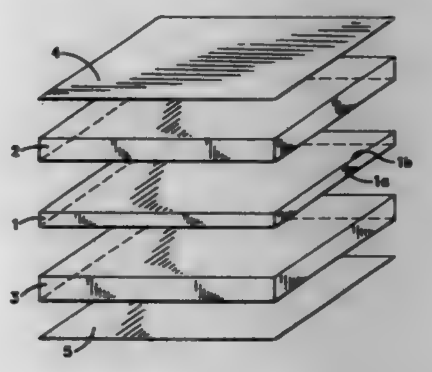

1. A method of polarizing at least one sheet of ferroelectric material having an area, the method comprising the following successive steps:
placing a film of ferroelectric material of film thickness e_1 against each of opposite faces of the sheet of sheet thickness e_2, the film thickness e_1 being a function of the sheet thickness e_2 and of a coercive field of each material of the sheet and of the films, the sheet of ferroelectric material and the films of ferroelectric material being made of different substances;
placing an electrode against a side of each film of ferroelectric material remote from said sheet to form an assemembly;
compressing the assembly; and
applying a cyclical electric voltage between the two electrodes to polarize said sheet of ferroelectric material.

5,700,360
FLUOROELASTOMER GASKET FOR BLOOD SENSORS
Andy D. C. Chan, Franklin; Mark W. Boden, Millbury; John S. Benco, Holliston; Robert A. Bergquist, Middleboro, and Donna S. Orvedahl, Medfield, all of Mass., assignors to Chiron Diagnostics Corporation, E. Walpole, Mass.
Filed Oct. 31, 1995, Ser. No. 550,884
Int. Cl.⁶ G01N *27/26*
U.S. Cl. 204—400 **75 Claims**

1. An electrochemical analyzer comprising:
an electrochemical sensor having a surface, a portion of the surface defining a sensing area; and

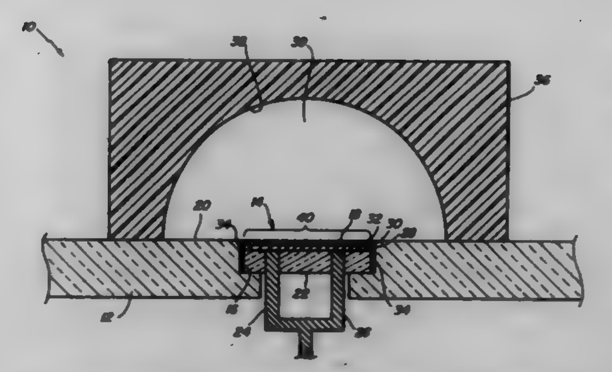

a sample container which positions a sample at the sensing area, at least a portion of the container defined by an elastomeric fluoropolymer.

5,700,361
METHOD FOR MANUFACTURING THIN ZIRCONIA FILM
Tohru Shiomitsu; Yasuhiko Manabe; Takashi Ogawa, all of Kawasaki; Yosaku Takita, Miyazakidai 3-4-33, Oita 870-11, and Tatsumi Ishihara, Oita, all of Japan, assignors to NKK Corporation, Tokyo, and Yusaku Takita, Oita, both of Japan
Filed Sep. 26, 1995, Ser. No. 533,946
Claims priority, application Japan, Nov. 24, 1994, 6-312333
Int. Cl.⁶ C25D *13/02*
U.S. Cl. 204—491 **21 Claims**

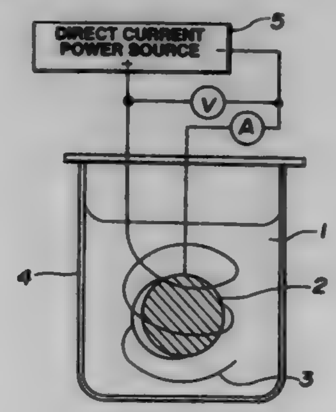

1. A method for manufacturing a thin zirconia film comprising the steps:
preparing a suspension in which partially-stabilized or stabilized zirconia particles having electric charges are dispersed in an organic solvent consisting of ketone or alcohol;
adjusting an electric conductivity of the suspension by adding iodine to the suspension;
positioning a pair of electrodes in the suspension first of said electrodes being made of a perovskite oxide represented by the formula $(Ln_{1-x}A_x)_yDO_3$ where Ln is at least one lanthanide, A is at least one selected from a group consisting of Ca, Sr and Ba, D is at least one selected from a group consisting of Mn, Cr and Co, and X and Y respectively satisfy $0 \leqq X \leqq 1$ and $0.8 \leqq Y \leqq 1$;
applying an electric field between the electrodes, said zirconia particles moving to a first electrode of said pair of electrodes and said zirconia particles being electrophoretically deposited on the first electrode electrochemically, to form a zirconia film; and
sintering the zirconia film to form a partially-stabilized or stabilized thin zirconia film.

5,700,362
METHOD OF TREATING COPPER FOIL FOR PRINTED CIRCUITS
Masami Yano, Kyoto, and Masato Takami, Uji, both of Japan, assignors to Fukuda Metal Foil and Powder Co., Ltd., Kyoto, Japan
Division of Ser. No. 417,873, Apr. 7, 1995, Pat. No. 5,567,534. This application Jun. 19, 1996, Ser. No. 666,030
Claims priority, application Japan, Apr. 15, 1994, 6-77158
Int. Cl.⁶ C23C *28/00;* **C25D** *3/56*
U.S. Cl. 205—191 **22 Claims**

1. A method for surface treating cooper foil having a shiny side for printed circuits comprising:
a step of forming a first layer of a zinc alloy of zinc and nickel and cobalt by electroplating the shiny side surface of said copper foil, and
a step of forming a second layer by immersing the first layer in an aqueous solution bath containing benzotriazole derivative and a phosphorus compound.

5,700,363
POROUS NICKEL ELECTRODE SUBSTRATE
Victor Alexander Ettel, Mississauga; John Ambrose, Burlington; Kirt Kenneth Cushnie, Walker's Line; James Alexander E. Bell, Oakville; Vladimir Paserin, and Peter Joseph Kalal, both of Mississauga, all of Canada, assignors to Inco Limited, Toronto, Canada
Filed Feb. 15, 1996, Ser. No. 601,738
Int. Cl.⁶ C25D *3/12*
U.S. Cl. 205—271 **4 Claims**

1. A process for varying the conductivity of an electrode substrate, the process comprising:
1) providing an electrically conductive core having opposing sides,
2) affixing at least one porous layer to each side of the core, the porous layer selected from the group consisting of foam and felt,
3) depositing nickel from the decomposition of nickel tetracarbonyl directly onto each porous layer,
4) causing the concentration of the nickel deposit from step 3) to vary along the substrate, and
5) sintering the nickel deposit.

5,700,364
ELECTROCHEMICAL OXIDATION
Kai Rossen, Westfield, N.J., assignor to Merck & Co., Inc., Rahway, N.J.
Filed Oct. 30, 1996, Ser. No. 742,430
Int. Cl.⁶ C25B *3/00;* **C07D** *263/52;263/60;413/00*
U.S. Cl. 205—425 **14 Claims**

1. A process for synthesizing an epoxide of formula,

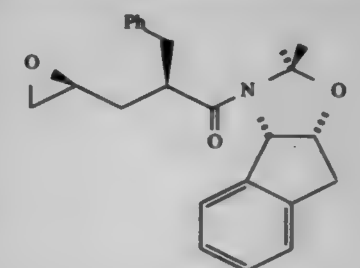

comprising the steps of:

(a) providing a quantity of allyl acetonide having a structure

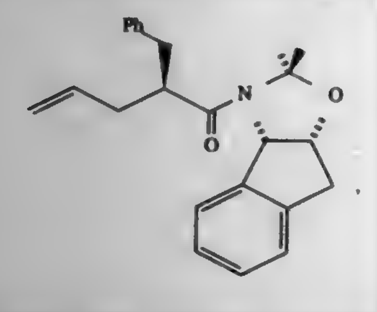

in aqueous mixture with between about 0.2 to about 2.0 equivalents of halide salt, and a water miscible cosolvent;

(b) subjecting said mixture to an electric current density of between about 0.01 A/cm^2 and about 0.5 A/cm^2 at a temperature of between about −40° C. and about 100° C.;

(c) to give the desired epoxide.

5,700,365
CROSSLINKED POLYACRYLAMIDE GELS WITH HIGH MONOMER: CROSSLINKER RATIOS
Timothy J. Highman, North Royalton; Michael E. Smerdel, Shaker Hts., and Stephen M. Behm, Avon, all of Ohio, assignors to Amresco Inc., Solon, Ohio
Filed Apr. 4, 1995, Ser. No. 416,347
Int. Cl.⁶ C25B *9/00*
U.S. Cl. 204—469 **14 Claims**

1. A composition for separating and detecting molecules comprising a gel which comprises an acrylamide monomer crosslinked with an amine acryloyl derivative of an amino compound having at least one secondary amine group, said derivative also having at least one tertiary amide group, wherein the ratio of acrylamide monomer:acryloyl derivative ranges from 40:1 to about 150:1, and wherein the concentration of the gel in the composition is between 3.0% and 25.0% by weight of the composition.

5,700,366
ELECTROLYTIC PROCESS FOR CLEANING AND COATING ELECTRICALLY CONDUCTING SURFACES
Valerij Leontievich Steblianko, Magnitogorsk, and Vitalij Makrovich Riabkov, Moscow, both of Russian Federation, assignors to Metal Technology, Inc., Mandeville, La.
Filed Sep. 3, 1996, Ser. No. 706,914
Claims priority, application Russian Federation, Mar. 20, 1996, 96104583
Int. Cl.⁶ C25D *5/08*
U.S. Cl. 205—87 **23 Claims**

1. An electrolytic process for simultaneously cleaning and metal-coating the surface of a workpiece of an electrically conducting material, which process comprises:

i) providing an electrolytic cell with a cathode comprising the surface of the workpiece and an anode comprising the metal for metal-coating of the surface of the workpiece;

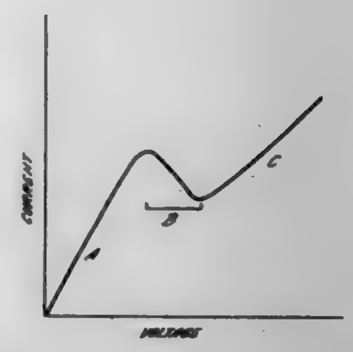

ii) introducing an electrolyte into the zone created between the anode and the cathode by causing it to flow under pressure through at least one opening in the anode and impinge on the cathode; and

iii) applying a voltage between the anode and the cathode and operating in a regime in which the electrical current decreases or remains substantially constant with increase in the voltage applied between the anode and the cathode, and in a regime in which discrete gas bubbles are present on the surface of the workpiece during treatment.

5,700,367
METHOD AND APPARATUS FOR CONTROLLING THE ENERGIZING OF A HEATER IN AN OXYGEN SENSOR
Tessho Yamada; Katsuhisa Yabuta; Takeshi Kawai, and Hideki Toyoda, all of Aichi, Japan, assignors to NGK Spark Plug Co., Ltd., Nagoya, Japan
Filed Apr. 23, 1996, Ser. No. 636,401
Claims priority, application Japan, Apr. 28, 1995, 7-105719
Int. Cl.⁶ G01N *27/409*
U.S. Cl. 205—785 **13 Claims**

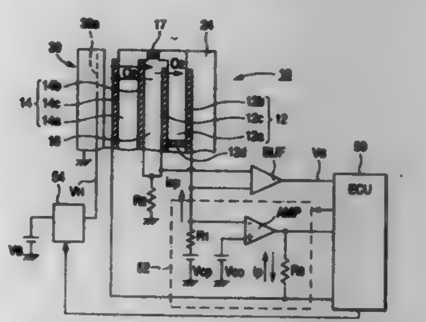

1. A method of controlling the energizing of a heater for an oxygen sensor, said oxygen sensor including a first sensor element having a pair of porous electrodes disposed on both faces of a solid electrolyte, said solid electrolyte being oxygen-ion-conductive, and a heater being disposed in the vicinity of said first sensor element and being energized to heat said first sensor element, said method comprising the steps of:

starting to energize said heater to heat said first sensor element;

measuring at least one of a time period from the start of energizing until an interelectrode voltage, generated between said pair of porous electrodes, reaches a predetermined voltage which is higher than an activation judging voltage, and a time period during which said interelectrode voltage maintains a voltage value which lies in a predetermined range of voltage values, each of which is greater than said activation judging voltage;

judging whether said first sensor element is activated based on a length of said at least one time period; and

setting an energizing condition of said heater based on said length of said time period.

5,700,368
TREATMENTS TO REDUCE ALDOL CONDENSATION AND SUBSEQUENT POLYMERIZATION IN CAUSTIC ACID GAS SCRUBBERS
Glenn L. Roof, Sugar Land, Tex., assignor to Baker Hughes Incorporated, Houston, Tex.
Filed May 25, 1995, Ser. No. 450,366
The portion of the term of this patent subsequent to May 25, 2015, has been disclaimed.
Int. Cl.⁶ C10G *9/16*
U.S. Cl. 208—48 AA **21 Claims**

1. A method for inhibiting aldol condensation in caustic scrubbers comprising the step of treating a caustic scrubbing solution comprising hydrocarbons with an inhibiting agent in an amount sufficient to inhibit said aldol condensation, wherein said inhibiting agent is selected from the group consisting of benzoic hydrazide, hydroperoxides, hydrogen peroxide, salts of hypochlorous acid, nitroalkanes, monoethanolamine, peroxyesters, and N,N-dialkylhydroxylamines.

5,700,369
PROCESS FOR ADSORBOAGGREGATIONAL FLOTATION OF CARLIN TYPE NATURAL GOLD ORE DRESSING
Zheng Zhou, and Zailan Zou, both of Guangzhou, China, assignors to Guangzhou Institute of Geochemistry Chinese Academy of Sciences, Guangzhou, China
Filed Jan. 14, 1997, Ser. No. 783,012
Int. Cl.⁶ B03D *1/02;1/01*
U.S. Cl. 209—166 **9 Claims**

1. A novel process for adsorptive aggregation and floatation of Carling type mine natural gold ores, comprising the following procedures:

(1) above 80% mineral ores are finely ground to smaller than 200 mesh;

(2) the mineral ores after being ground are first sluiced;

(3) then the sluiced ores are carried out a floatation which comprises coarse screening and sweep screenings, wherein the following preparations are sequentially added:

a. a stfficient amount of "the stripping agent" is added, the composition (weight percentage) of which is: 0.025–1 fluorosodium silicate, 0.03–1 lactic acid, 0.03–1.6 lead nitrate, 0.4–5 acid, and the rest water;

b. a sufficient amount of "the adsorptive aggregation agent" wherein the composition (weight percentage) is: 5–20 coal oil, 0. 1–3 machine oil, 0.1–2 turpentine oil, 0.1–1 ethyl xanthine, 0.05–0.5 dodecylamine and the rest water;

c. a sufficient amount of "xanthine collecting agent";

d. a sufficient amount of "flocculant".

5,700,370
BIOLOGICAL TREATMENT PLANT CONTROLLED BY FLUORESCENCE SENSORS
Kim Helme, Karlslunde, Denmark, assignor to BioBalance A/S, Brondby, Denmark
Continuation of Ser. No. 299,543, Sep. 1, 1994, Pat. No. 5,506,096, which is a continuation of Ser. No. 63,356, May 18, 1993, abandoned, which is a continuation of Ser. No. 461,088, Jan. 4, 1990, abandoned. This application Sep. 22, 1995, Ser. No. 532,849
Claims priority, application Denmark, Feb. 28, 1989, 0969/89
Int. Cl.⁶ B01D *17/12;* **C02F** *3/00*
U.S. Cl. 210—94 **6 Claims**

1. A waste water purification plant operable for biological treatment and optionally for mechanical and/or chemical treatment of biodegradable material present in an aqueous environment, which plant in a biological treatment part contains at least one first sensor which is operable for measuring fluorescent emission and/or variations therein of at least one characteristic biogenic fluorophore

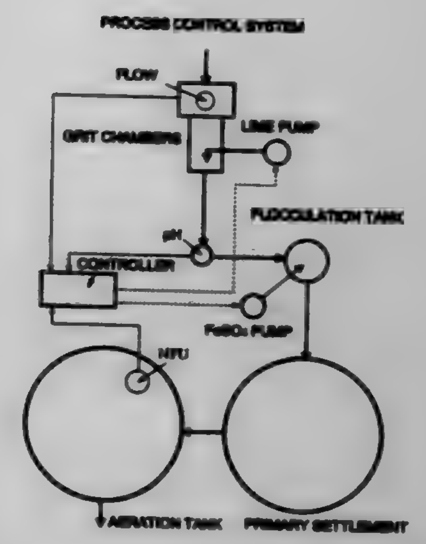

present in the biological treatment part which comprises a first mixed culture of microorganisms, and which plant further comprises:

a first data processing means connected to the at least one first sensor, which first data processing means is operable for converting a recording fluorescent emission signal to a measurement value and comparing said measurement value to a predetermined set point which indicates optimum or near optimum conditions for the first mixed culture of microorganisms with respect to the biodegradation of the biodegradable material.

a first control means connected to the first data processing means, which first control means is adapted to control the biological and optionally mechanical and/or chemical treatment of the biodegradable material on the basis of the signal obtained from the first data processing means as the result of the comparison performed therein, so as to move subsequent fluorescence measurements toward the pre-determined set point, whereby conditions in the biological treatment part are adapted in the direction of optimum or near optimum conditions for the first mixed culture of microorganisms with respect to biodegradation of the biodegradable material,

said at least one characteristic biogenic fluorophore being one which is present in the first mixed culture of microorganisms and acts as indicator of the metabolic activity of the first mixed culture of microorganisms; and

a portion for determining quality and/or quantity of the biodegradable material which is to be treated in the plant, which portion comprises a biological system comprising a second mixed culture of microorganisms and a sample of the biodegradable material and at least one second sensor which is operable for measuring fluorescent emission and/or variations therein of at least one characteristic biogenic fluorophore present in the biological system.

5,700,371
WATER TREATMENT CARTRIDGE AND BASE
Evan E. Koslow, Weston, Conn., assignor to KX Industries, L.P., Orange, Conn.
Filed Apr. 24, 1996, Ser. No. 637,231
Int. Cl.⁶ B01D *27/08;27/04;27/14;35/30*
U.S. Cl. 210—232 **16 Claims**

1. Liquid treating apparatus which comprises:

A. a housing carrying a key member and containing at least two treatment elements, each of said treatment elements being substantially in the form of a solid porous cylinder having a bore therethrough along its longitudinal axis, the exteriors of said treatment elements and the interior of said housing forming a liquid reservoir;

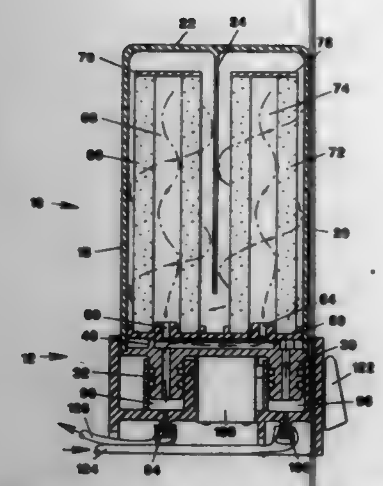

B. a base member releasably receiving said housing, said base member including
  i. means for supplying a liquid to be treated to one of said bores and said reservoir, said liquid passing radially through each of said porous cylinders;
  ii. means for delivering treated liquid from the other of said bores and reservoir; and
  iii. a latch for receiving said key member, wherein said key member includes a detent and said latch comprises a spring clip engageable with said detent; and
C. said base member defining first and second sockets therein and said housing carrying first and second hollow studs insertable in said sockets to form, when so inserted, a liquid supplying channel and a liquid delivery channel.

5,700,372
DIALYZER WITH A CONSTRICTED PART MADE OF A MATERIAL CAPABLE OF SWELLED BY DIALIZING LIQUID

Shingo Takesawa, Tokyo; Noriyuki Hosoya, Kanagawa, and Masatomi Sasaki, Kanagawa, all of Japan, assignors to Terumo Kabushiki Kaisha, Tokyo, Japan
Filed Sep. 1, 1995, Ser. No. 523,526
Claims priority, application Japan, Sep. 2, 1994, 6-234373
Int. Cl.[6] B01D *63/02*
U.S. Cl. 210—321.81 **8 Claims**

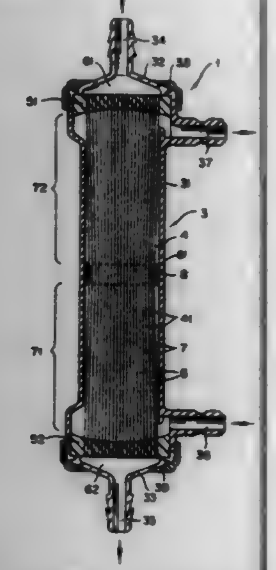

1. A dialyzer comprising a cylindrical housing in which is positioned a bundle of hollow fiber membranes, first flow paths and second flow paths separated from each other by said hollow fiber membranes for effecting dialysis and ultrafiltration through the medium of said hollow fiber membranes between a body liquid flowing through said first flow paths and a dialyzing liquid flowing through said second flow paths, a body liquid inlet and body liquid outlet in fluid communication with the first flow paths, a dialyzing liquid inlet and a dialyzing liquid outlet in fluid communication with the second flow paths, and a constricted part formed halfway along the length of said second flow paths with a material capable of being swelled by said dialyzing liquid so as to confer a difference of pressure on said dialyzing liquid on an upstream side and a downstream side of said dialyzing liquid relative to said constricted part.

5,700,373
METHOD FOR SEALING A FILTER

Marcus A. Ritland, Golden; Dennis W. Readey, Lakewood; Richard N. Kleiner, Englewood, and Jack D. Sibold, Golden, all of Colo., assignors to Coors Ceramics Company, Golden, Colo.
Continuation-in-part of Ser. No. 946,972, Sep. 17, 1992, abandoned. This application Mar. 31, 1994, Ser. No. 220,558
Int. Cl.[6] B01D *35/00;* **B23K** *1/19;31/02;103/16*
U.S. Cl. 210—323.2 **21 Claims**

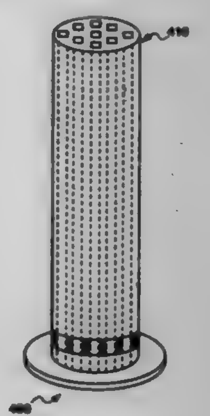

1. A method for sealing an end of a ceramic filter element, comprising the steps of:
a) providing a porous ceramic filter element comprising a first portion and a second end portion and comprising filtering channels therethrough wherein said filter element comprises a substantially continuous network of open porosity;
b) contacting a portion of said first end of said filter element with a molten metal to infiltrate said metal into the continuous network of open porosity in said first end portion of said filter element without substantially infiltrating said filtering channels;
c) cooling said infiltrated portion to form a filter element having an internally sealed end comprising a ceramic-metal composite portion; and
d) attaching a metal seal ring to said ceramic-metal composite portion.

5,700,374
PERVAPORATION MEMBRANES AND USE THEREOF

Hermann A. Steinhauser, Friedrichshafen, and Hartmut E. A. Brüschke, Nussloch, both of Germany, assignors to Deutsche Carbone AG, Frankfurt, Germany
Filed Mar. 23, 1995, Ser. No. 409,701
Claims priority, application Germany, Mar. 28, 1994, 44 10 763.3
Int. Cl.[6] B01D *15/00;29/00*
U.S. Cl. 210—640 **12 Claims**

1. A method of separating one or more alcohols from a mixture with other organic fluids by pervaporation or vapor permeation utilizing a membrane with a pore-free separation layer, said layer

selected from the group consisting of poly-dimethyl aminoethyl methacrylate homopolymers, N-vinylpyrrolidone dim ethyl aminoethyl methacrylate copolymers, N-vinylcaprolactam dimethyl aminoethyl methacrylate copolymers, or N-vinylcaprolactam N-vinylpyrrolidone dimethyl aminoethyl methacrylate terpolymers.

5,700,375
PARTICLE LOADED MEMBRANES AS OXIDANT SCAVENGERS

Donald F. Hagen, Woodbury; Kenneth M. Hart, Oakdale, and Glenn D. Johnson, Mahtomedi, all of Minn., assignors to Minnesota Mining and Manufacturing Company, St. Paul, Minn.
Filed Apr. 29, 1996, Ser. No. 639,591
Int. Cl.[6] B01D *61/00*
U.S. Cl. 210—651 **23 Claims**

1. A method for removing an oxidant from a fluid comprising the step of passing a fluid including said oxidant through at least one solid phase reaction article comprising a porous membrane having incorporated therein an antioxidant, said antioxidant consisting essentially of oxidant scavenger particulates which react chemically in an oxidation-reduction reaction with said oxidant, said oxidant scavenger particulates being selected from the group consisting of 1) polymeric organic particulates or derivatives thereof having readily oxidizable sites, and inert particulates coated with said polymers, and 2) inorganic coated particulates having coatings selected from the group consisting of potassium iodide, sodium thiosulfate, potassium iodide+sodium thiosulfate, and Indigo Blue, said oxidant being active towards organic compounds.

5,700,376
METHOD AND APPARATUS FOR MAGNETICALLY TREATING FLOWING LIQUIDS

Roland K. Carpenter, 251 W. Canal Dr., Palm Harbor, Fla. 34684
PCT No. PCT/US94/12014, § 371 Date Mar. 1, 1996, § 102(e) Date Mar. 1, 1996, PCT Pub. No. WO95/11198, PCT Pub. Date Apr. 20, 1995
PCT Filed Oct. 20, 1994, Ser. No. 605,193
Int. Cl.[6] E21B *37/00;* **C02F** *1/48*
U.S. Cl. 210—695 **23 Claims**

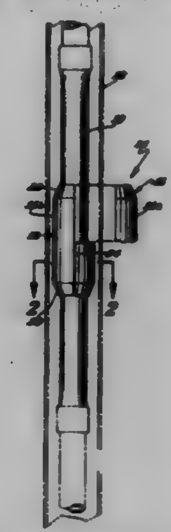

1. Apparatus for magnetically treating flowing liquids through a pipe, with the pipe having an outer surface having a circular cross section of a diameter, comprising, in combination: a housing including a cylindrical portion, with the cylindrical portion having inside and outside surfaces having circular cross sections of diameters larger than the diameter of the outer surface of the pipe, with the housing further including a plurality of parallel spacers secured at circumferentially spaced locations to the inside surface of the cylindrical portion and having axial lengths generally equal to the axial length of the cylindrical portion, with the spacers having free edges which terminate in a cylinder having a diameter generally equal to the diameter of the outer surface of the pipe; and means for producing a magnetic field for a liquid flowing through the pipe comprising, in combination: a series of first magnets sandwiched between the inside surface of the cylindrical portion and the outer surface of the pipe, with the first magnets being circumferentially spaced from each other and from the spacers; and a series of second magnets sandwiched between the inside surface of the cylindrical portion and the outer surface of the pipe and axially spaced from the first magnets, with the second magnets being circumferentially spaced from each other and from the spacers, with the first and second magnets each having north and south poles, with the first magnets having the north poles located radially outward of the south poles and the second magnets having the south poles located radially outward of the north poles.

12. Method for magnetically treating flowing liquids comprising the steps of: providing a pipe including an outer surface having a circular cross section of a diameter; providing a magnetic apparatus producing a magnetic field and including a housing having a cylindrical portion, with the cylindrical portion including an outside surface having generally circular cross sections of a diameter larger than the diameter of the pipe, with the outside surface of the cylindrical portion of the housing having a radial size larger than the remaining portions of the housing, with the magnetic apparatus including the housing being divided into first and second longitudinal portions which are radially separable from the pipe; attaching the first and second longitudinal portions together to secure the magnetic apparatus to the pipe generally by frictional forces between the first and second longitudinal portions and the pipe and being free of attachment of the first and second longitudinal portions to the pipe; and flowing the liquid through the pipe after the magnetic apparatus is secured to the pipe characterized in that the attaching step comprises the steps of: clamping the first and second longitudinal portions on the pipe with sufficient force to secure the magnetic apparatus to the pipe generally by frictional forces between the first and second longitudinal portions and the pipe; attaching the first and second longitudinal portions together generally without exceeding the diameter of the cylindrical portion; and removing the clamping force from the first and second longitudinal portions after the first and second longitudinal portions are attached together.

5,700,377
PURIFICATION OF WATER

Peter Glen Cox, P.O. Box 497, Linkhills, 3652, South Africa
Filed Jun. 18, 1996, Ser. No. 668,966
Int. Cl.[6] C02F *1/50;1/72*
U.S. Cl. 210—724 **18 Claims**

1. A chemical composition for the purification of water for use in non-porous swimming pools, which comprises a primary mixture of a peroxide compound in the form of an alkaline persulphate, an acidic compound in the form of sodium bisulphate, an ammonium-based biocidal compound, a basic compound in the form of sodium bicarbonate, a calcium-releasing basic compound and ethylendiamine tetra acetic acid (abbreviated EDTA), the mixture containing 45 to 55% (m/m) alkaline persulphate, 8 to 16% (m/m) sodium bisulphate, 8 to 12% (m/m) ammonium-based biocidal compound, 8 to 12% (m/m) sodium bicarbonate, 8 to 12% (m/m) calcium-releasing basic compound, and 2 to 6% (m/m) EDTA, the alkaline persulphate and the biocidal compound being effective in disinfecting water to be purified and in eradicating algae and bacteria therein, with the sodium bisulphate, the sodium bicarbonate and the calcium-releasing basic compound being effective in balancing the pH of water to be purified to a pH value within an optimum range between 7.2 and 7.6, and the EDTA being effective to complex heavy metals in the water to be purified.

5,700,378
METHOD AND APPARATUS FOR GRAVITATIONAL SEPARATION OF FINE ARTICLES FROM A LIQUID
Hyoseong Lee, Tumba, and Lars Ehnström, Tullinge, both of Sweden, assignors to Vivex AB, Norsborg, Sweden
Filed Mar. 19, 1996, Ser. No. 617,601
Claims priority, application Sweden, Mar. 20, 1995, 9500966
Int. Cl.⁶ G01D *71/02*
U.S. Cl. 210—771 **32 Claims**

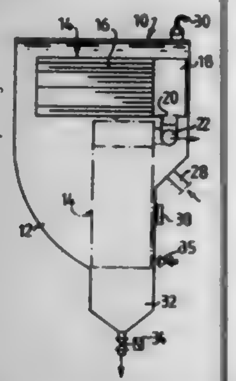

1. A method for the gravitational separation of fine particles from a liquid, comprising the steps of conducting the liquid containing the particles in a unidirectional laminar flow through spaces defined by a plurality of adjacent, essentially horizontally oriented, channel-forming elements in a box-shaped separation unit, interrupting the liquid flow through the spaces when the particle concentration in the liquid, which has passed through the spaces, exceeds a predetermined value, tilting the channel-forming elements to an essentially vertical position about an axis transverse to the direction of the liquid flow for removal of the particles on the channel-forming elements, and returning the channel-forming elements to essentially horizontal working position after cleaning for the commencement of a new gravitational separation cycle.

5,700,379
METHOD FOR DRYING MICROMECHANICAL COMPONENTS
Markus Biebl, Augsburg, Germany, assignor to Siemens Aktiengesellschaft, Munich, Germany
Filed Feb. 14, 1996, Ser. No. 601,612
Claims priority, application Germany, Feb. 23, 1995, 195 06 404.6
Int. Cl.⁶ H01L *21/306;* **B01D** *7/00;12/00*
U.S. Cl. 216—2 **15 Claims**

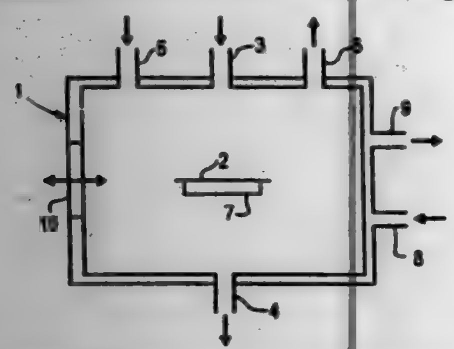

1. A method for separating micromechanical function elements on a semiconductor component, comprising the steps of:
manufacturing and wet-chemically etching free a micromechanical function element in an interior of the container;
for the wet-chemical etching, employing a liquid etching chemical which is bled from the container and admitting a liquid into the container as a rinsing agent;
bleeding downwardly the liquid admitted as a rinsing agent from the container and simultaneously admitting a liquid having a relatively lower density than the rinsing agent liquid into the container from above until the lower density liquid completely replaces the rinsing agent liquid;
completely converting the lower density liquid admitted into the container into a gaseous aggregate state by changing at least one of pressure and temperature in an interior of the container; and
matching a pressure in the container to an outside air pressure and removing the etched component from the container.

5,700,380
SIMPLIFIED METHOD OF MAKING VIAS FOR MERGED MR HEAD
Mohamad Towfik Krounbi, and James Hsi-Tang Lee, both of San Jose, Calif., assignors to International Business Machines Corporation, Armonk, N.Y.
Division of Ser. No. 205,006, Mar. 2, 1994, Pat. No. 5,435,053. This application Jun. 7, 1995, Ser. No. 476,241
Int. Cl.⁶ G11B *5/187;* **B44C** *1/22*
U.S. Cl. 216—22 **27 Claims**

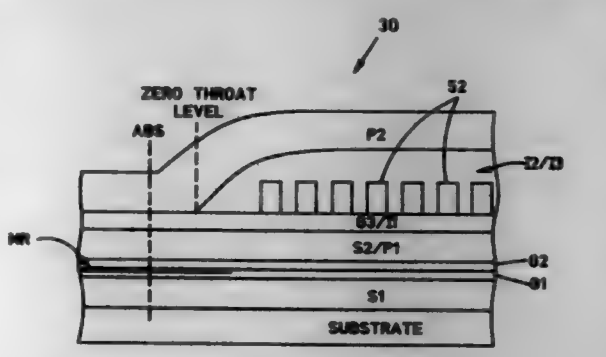

6. A method of making a thin film structure comprising the steps of:
forming first and second electrically conductive layers between first and second non-magnetic layers and forming the first and second non-magnetic layers between first and second magnetic layers;
forming a third non-magnetic layer on top of the second magnetic layer;
forming a photoresist layer with at least first, second and third openings on top of the third non-magnetic layer for making first, second and third vias, each of the second and third vias being through the third and second non-magnetic layers to the first and second electrically conductive layers and the first via being through the third non-magnetic layer to the second magnetic layer;
simultaneously introducing an etchant into the first, second and third openings to etch through the third and second non-magnetic layers to the first and second electrically conductive layers and to the second magnetic layer, the etchant in the first opening reaching the second magnetic layer before the etchant in the second and third openings reaches the first and second electrically conductive layers; and
downsizing a lateral dimension of the first opening with respect to lateral dimensions of the second and third openings so that the etchant in the first opening will etch the first via with a desired lateral configuration upon the occurrence of the etchant in the second and third openings first reaching the first and second electrically conductive layers.

5,700,381
METHOD FOR MANUFACTURING THIN FILM MAGNETIC HEAD
Fujimi Kimura, Kitasaku-gun; Toyoaki Tanaka, Saku; Akihiko Dobashi, Saku, and Takashi Abe, Saku, all of Japan, assignors to TDK Corporation, Tokyo, Japan
Filed Sep. 7, 1995, Ser. No. 526,498
Int. Cl.⁶ B44C *1/22*
U.S. Cl. 216—22 **4 Claims**

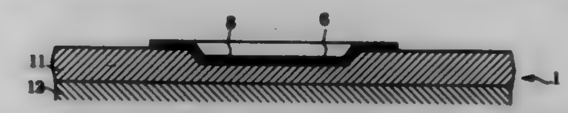

1. A method for manufacturing a thin film magnetic head with a magnetic transducer or a component thereof on an indented portion provided in one surface of a substrate, the method comprising the steps of:
applying a metal film to the surface of said substrate;
patterning said metal film in such a manner that said surface of said substrate will be exposed in a pattern corresponding to a pattern of said indented portion; and
immersing said substrate in an etching solution that etches said substrate selectively to form said indented portion in said surface with said metal film as a mask;
wherein:
an internal side surface of said indented portion is a bevelled surface with an inclination of 5° to 90°.

5,700,382
METHOD FOR FABRICATING A SILICON SEMICONDUCTOR SUBSTRATE HAVING AN INTEGRATED WAVEGUIDE AND AN OPTICAL FIBER COUPLED THERETO
Armin Splett, München, Germany, assignor to Siemens Aktiengesellschaft, München, Germany
PCT No. PCT/DE94/00867, § 371 Date Apr. 1, 1996, § 102(e) Date Apr. 1, 1996, PCT Pub. No. WO95/04296, PCT Pub. Date Feb. 9, 1995
PCT Filed Jul. 15, 1994, Ser. No. 591,619
Claims priority, application Germany, Jul. 27, 1993, 4325955.3
Int. Cl.⁶ H01L *21/00;* **B44C** *1/22*
U.S. Cl. 216—24 **4 Claims**

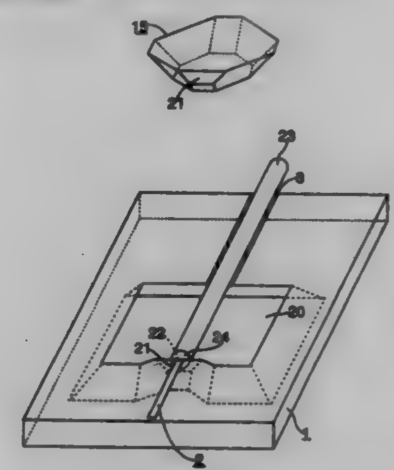

1. A method for fabricating a silicon semiconductor substrate having an integrated waveguide and an optical fiber coupled thereto, comprising the steps of:
a) providing an integrated waveguide in a silicon semiconductor substrate;
b) anisotropically etching a V-shaped groove into said silicon semiconductor substrate aligned with said waveguide;
c) providing said integrated waveguide with a freely accessible end surface situated opposite the end of the V-shaped groove by producing a recess in the silicon semiconductor substrate, the formation of said recess comprising the steps of:
1) anisotropically etching a piece of the semiconductor substrate from the surface of said silicon semiconductor substrate opposite the surface bearing said V-shaped groove, wherein said piece is bared down to a region surrounding said integrated waveguide, and wherein said piece remains connected to said waveguide by a V-shaped notch;
2) exerting pressure on said piece, causing it to break off at said V-shaped notch, forming said freely accessible end surface of said integrated waveguide as a fracture surface;
d) inserting an optical fiber into the V-shaped groove, said optical fiber extending up to said freely accessible end surface.

5,700,383
SLURRIES AND METHODS FOR CHEMICAL MECHANICAL POLISH OF ALUMINUM AND TITANIUM ALUMINIDE
A. Daniel Feller, and Kenneth C. Cadien, both of Portland, Oreg., assignors to Intel Corporation, Santa Clara, Calif.
Filed Dec. 21, 1995, Ser. No. 577,243
Int. Cl.⁶ C23F *3/00;1/44*
U.S. Cl. 216—88 **42 Claims**

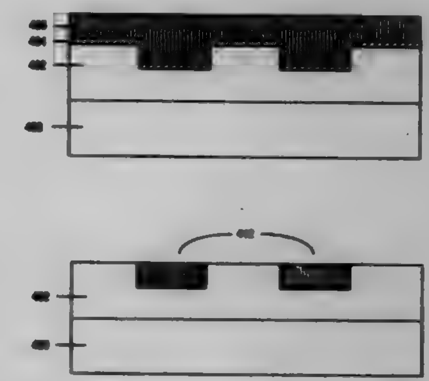

1. A method of polishing comprising the steps of:
placing a metal surface in contact with a polishing pad;
delivering a slurry comprising an oxidant, a halogen, an abrasive, and a chelating agent to said metal surface; and
chemically mechanically polishing said metal surface with said slurry.

5,700,384
METHOD OF MANUFACTURING A SPLIT MASTER LINK BY ELECTRICAL DISCHARGE MACHINING
Jean-Louis Marchand, Veurey; Michel Palomera, Echirolles; Michel Peeters, Bernin, and Jean-Paul Salomon, Tullins, all of France, assignors to Caterpillar Inc., Peoria, Ill.
Filed Nov. 9, 1995, Ser. No. 554,923
Int. Cl.⁶ B23H *9/00*
U.S. Cl. 219—69.12 **17 Claims**

1. A method of manufacturing a split master link for use in an endless track, the method comprised of:
forming a split master link process blank;
securing the split master link process blank in an electrical discharge cutting machine; and

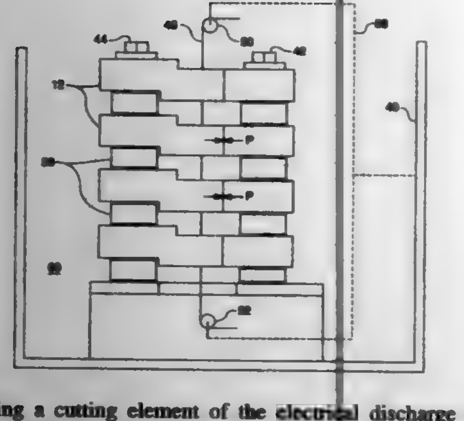

actuating a cutting element of the electrical discharge cutting machine along a cutting path to generate complimentary fit-up faces in the split master link process blank.

5,700,385

APPARATUS FOR SUPPORTING AND LOCATING BURIED CABLE AND SIMILAR DEVICES

Thaddeus M. Jones, 1302 High St., South Bend, Ind. 46601

Filed Jan. 4, 1996, Ser. No. 582,927

Int. Cl.^{6} E04C *5/18;* **E01C** *23/04*

U.S. Cl. 249—91 **1 Claim**

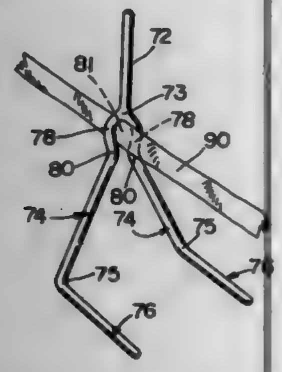

1. A clip apparatus for use in supporting and affixing a buried cable at a desired depth while being buried or embedded within earth, asphalt or concrete, the improvement comprising said clip apparatus having magnetic properties for allowing said clip apparatus once buried with said buried cable to be located by a magnetic field, said clip apparatus includes an elongated upright neck part, two upright leg segments diverging from the lower end of said neck part, a horizontal foot segment integrally extending from the lower end of each said leg segment, and means for supporting said buried cable between said leg segments at a height above said horizontal foot segments wherein each said leg segment has a curved segment adjacent said neck part defining an opening for restrictively receiving said buried cable therein.

5,700,386

PROCESS FOR MAKING SOIL RELEASE POLYMER GRANULES

Benjamin Edgar Chapman, and Michael Timothy Creedon, both of Cincinnati, Ohio, assignors to The Procter & Gamble Company, Cincinnati, Ohio

Filed Aug. 8, 1996, Ser. No. 694,133

Int. Cl.^{6} C11D *1/722;* **C08K** *5/06;31/06*

U.S. Cl. 252—8.62 **12 Claims**

1. A process for making granular compositions comprising soil release polymers, the polymers comprising at least about 10% of substantially linear esters having a backbone; the esters being uncapped or end-capped on one or both ends of the backbone; the esters comprising in their backbones oxyalkyleneoxy units and hydrophobic aryldicarbonyl units; the esters having a molecular weight of from about 500 to about 20,000; the polymers if in solid state having the tendency when exposed to moisture to spontaneously rearrange from an amorphous form which is readily soluble in water to a crystalline form which is relatively insoluble in water; the process comprising the following steps:

a) taking the soil release polymers, in which are dispersed from 0% to about 25% alkylaryl or alkyl sulfonate crystallization-reducing stabilizers, in molten state at a temperature of at least about 180° C., and rapidly dissolving the molten polymers in water, forming an aqueous polymer solution having a polymer concentration of up to about 50%, the average temperature of the solution being maintained below about 50° C.;

b) dispersing a nonionic surfactant in the molten polymers or in the water prior to step a), the surfactant being an alkylethoxy alcohol nonionic surfactant which is a condensation product of alkylalcohol and ethylene oxide, the alkyl portion being linear or branched, saturated or unsaturated, having from about 8 to about 22 carbon atoms, there being an average of from about 10 to about 100 moles ethoxy per mole surfactant, the nonionic surfactant being from about 2% to about 20% of the aqueous polymer solution, on a dry weight basis; and

c) drying the aqueous polymer solution of b), thereby producing a granular composition having a water content of less than about 3%.

5,700,387

FABRIC SOFTENING COMPOSITION

Ziya Haq, Wirral; Abid Nadim Khan-Lodhi, Chester, and Philip John Sams, South Wirral, all of United Kingdom, assignors to Lever Brothers Company, Division of Conopco, Inc., New York, N.Y.

Filed Apr. 6, 1995, Ser. No. 418,043

Claims priority, application United Kingdom, Apr. 7, 1994, 9406824

Int. Cl.^{6} B01F *3/00*

U.S. Cl. 252—8.63 **12 Claims**

1. A fabric softening composition for coating or impregnating a substrate comprising

i) a substantially water insoluble fabric softening compound comprising a cationic head group and two alkyl or alkenyl chains each having an average chain length greater than or equal to or greater than C_{14} or a single alkyl or alkenyl chain with an average chain length greater than or equal to C_{20}; and,

ii) a solubilizing agent comprising a nonionic or amphoteric surfactant or mixture thereof and optionally a non-surfactant cosolubilizer;

characterized in that the weight ratio of solubilizing agent (ii) to fabric softening (i) compound is greater than 1:6 and when the fabric softening composition is diluted in water to a concentration of 5 wt. % of (i) and (ii), at least 70 wt. % of the fabric softening compound is in solution.

5,700,388

AZEOTROPIC OR AZEOTROPE-LIKE COMPOSITIONS OF AMMONIA AND TETRAFLUOROETHANE

Mark Brandon Shiflett, Newark, and Akimichi Yokozeki, Wilmington, both of Del., assignors to E. I. du Pont de Nemours and Company, Wilmington, Del.

Division of Ser. No. 951,734, Sep. 25, 1992, Pat. No. 5,387,357. This application Oct. 28, 1994, Ser. No. 330,453

Int. Cl.^{6} C09K *5/04;3/30*

U.S. Cl. 252—67 **4 Claims**

1. A mixture consisting essentially of an azeotropic or azeotrope-like composition consisting of either (a) 20 to 99 weight percent ammonia and about 1 to 80 weight percent 1,1,1,2-tetrafluoroethane, wherein said composition boils at about 0° C. when the pressure is adjusted to about 62.2 to 70.4 psia; or (b) about 40 to 99 weight percent ammonia and about 1 to 60 weight percent 1,1,2,2-tetrafluoroethane, wherein said composition boils at about 0° C. when the pressure is adjusted to about 58.1 to 61.9 psia.

4. A process for producing heat which comprises condensing a composition of claim 1 in the vicinity of a body to be heated and thereafter evaporating said composition.

5,700,389

ETCHING SOLUTION FOR COPPER OR COPPER ALLOY

Toshiko Nakagawa, Amagasaki, Japan, assignor to MEC Co., Ltd., Amagasaki, Japan

Filed Aug. 2, 1995, Ser. No. 510,299

Claims priority, application Japan, Aug. 12, 1994, 6-210732

Int. Cl.^{6} C23F *3/00;1/00*

U.S. Cl. 252—79.2 **13 Claims**

1. An etching solution for copper or copper alloys comprising:

(a) sulfuric acid,

(b) a persulfate,

(c) at least one compound selected from the group consisting of imidazole, imidazole derivatives, pyridine derivatives in which the 2-position or 4-position thereof is substituted with an alkyl group, an amino group or a carboxyl group, triazine, and triazine derivatives,

(d) water, and

(e) amidosulfuric acid or an aliphatic sulfonic acid.

5,700,390

POLYOL COMPOSITIONS HAVING INTERNAL MOLD RELEASE PROPERTIES

James Turnbach, Madison Heights, Mich., assignor to BASF Corporation, Mt. Olive, N.J.

Filed Dec. 14, 1995, Ser. No. 572,565

Int. Cl.^{6} C08K *5/12;5/04;5/54;* **B28B** *7/36*

U.S. Cl. 252—182.24 **23 Claims**

1. A polyol composition capable of providing internal mold release properties to a polyurethane system, comprising:

A.) an isocyanate-reactive polyol having a number average molecular weight from 100 to about 10,000; and

B.) an effective mount of an internal mold release composition, comprising:

a.) a polymeric dimethylsiloxane compound; and,

b.) a diester functional compound comprising the reaction product of:

(i) an aromatic dicarboxylic acid; and

(ii) a monofunctional alcohol having from 2 to 30 carbons.

5,700,391

LIQUID COATING COMPOSITION FORMING A LIQUID CRYSTAL DISPLAY ELEMENT INSULATING FILM

Tatsuya Nogami; Rie Sakai, and Takeshi Hosoya, all of Funabashi, Japan, assignors to Nissan Chemical Industries, Ltd., Tokyo, Japan

Filed Feb. 15, 1994, Ser. No. 196,444

Claims priority, application Japan, Feb. 18, 1993, 5-029213

Int. Cl.^{6} C09K *19/52;19/00*

U.S. Cl. 252—299.01 **13 Claims**

1. A liquid coating composition for the formation of a liquid crystal display element insulating film, which comprises:

(a) a solution obtained by hydrolyzing a tetraalkoxysilane of the general formula (1):

$$Si(OR)_4 \qquad (1)$$

wherein R represents an alkyl group having from 1 to 5 carbon atoms,

in an organic solvent in the presence of an alkaline catalyst, said solution containing particles having a particle size of from 10 nm to 80 nm;

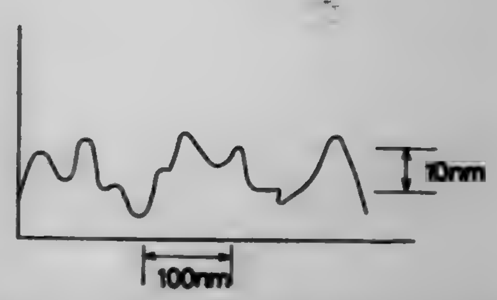

(b) at least one member selected from the group consisting of:

(i) a hydrolyzed product, formed in the presence of an acid catalyst, of an alkoxysilane of the general formula (2):

$$R^1{}_nSi(OR^2)_{4-n} \qquad (2)$$

wherein R^1 represents a group having 1 to 18 carbon atoms, said group being an alkyl group, an alkenyl group or an aryl group, R^2 represents an alkyl group having from 1 to 5 carbon atoms, and n represents an integer of from 0 to 2, and

(ii) a hydrolyzed product, formed in the presence of an acid catalyst, of a tetraalkoxy titanium of the general formula (3):

$$Ti(OR^3)_4 \qquad (3)$$

wherein R^3 represents an alkyl group having from 1 to 5 carbon atoms;

(c) an aluminum salt; and

(d) a deposition inhibitor,

all having been uniformly mixed in an organic solvent.

5,700,392

ANTIFERROELECTRIC LIQUID CRYSTAL COMPOSITION

Katsuhide Kikuchi, Kariya; Hitoshi Hayashi, Okazaki; Akira Takeuchi, and Kenji Takigawa, both of Nishio, all of Japan, assignors to Nippon Soken, Inc., Aichi, Japan

Filed Mar. 16, 1995, Ser. No. 406,326

Claims priority, application Japan, Mar. 16, 1994, 6-045902

Int. Cl.^{6} C09K *19/12;19/20;19/52;19/34*

U.S. Cl. 252—299.01 **5 Claims**

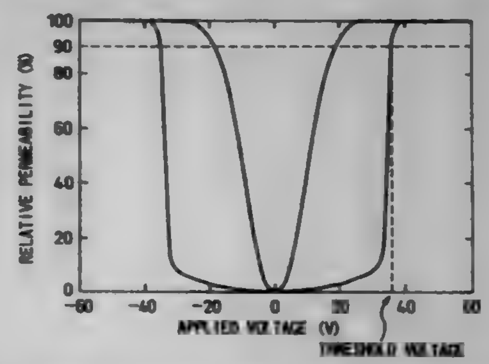

1. An antiferroelectric liquid crystal composition consisting essentially of:

50 to 99 wt % of a liquid crystal composition having an antiferroelectric phase and containing at least one compound represented by the formula (II) shown below:

$$R^3{-}Y'{-}A^4{-}A^5{-}COO{-}A^6{-}COO{-}\underset{*}{\overset{\overset{X'}{|}}{C}}H{-}R^4 \qquad (II)$$

wherein X' is $-CH_3$, $-CF_3$ or $-C_2H_5$; R^3 and R^4 are straight chain or branched alkyl radicals having 3 to 14 and 3 to 10 carbon atoms respectively; Y' represents a single bond, or —O—, —CO—, —COO— or —OCO— radical; and A^4, A^5 and A^6 independently represent a six membered ring selected from the

group consisting of benzene rings, cyclohexane rings, pyridine rings and pyrimidine rings, at least one hydrogen of which six membered ring may be replaced by a fluorine atom, chlorine atom, bromine atom, cyano group, nitro group, methyl group, ethyl group or methoxy group; and

1 to 50 wt % of a compound represented by the formula (I) shown below:

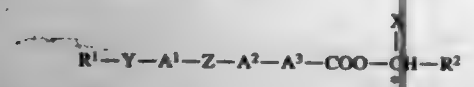

(I)

wherein the wt % is based on the total weight of the liquid crystal composition having the antiferroelectric phase and the compound represented by the formula (I); X is —CH_3, —CF_3 or —C_2H_5; R^1 and R^2 are straight chain or branched alkyl radicals having 3 to 14 and 3 to 10 carbon atoms respectively; Y represents a single bond, or —O—, —CO—, — COO— or —OCO— radical; Z represents —COO—, —C≡C— or —CH_2CH_2— radical; and A^1, A^2 and A^3 independently represent a six membered ring selected from the group consisting of benzene rings, cyclohexane rings, pyridine rings and pyrimidine rings, at least one hydrogen of which six membered ring may be replaced by a fluorine atom, chlorine atom, bromine atom, cyano group, nitro group, methyl group, ethyl group or methoxy group.

5,700,393

LIQUID CRYSTALLINE COMPOUNDS

Stephen Kelly, Beverley, England, assignor to Rolic AG, Basel, Switzerland

Filed Jul. 26, 1996, Ser. No. 687,869

Claims priority, application Switzerland, Jul. 28, 1995, 2220/95; European Pat. Off., May 9, 1996, 96107333

Int. Cl.[6] C09K *19/30;19/52;19/20;* **C07C** *69/76*

U.S. Cl. 252—299.63 **10 Claims**

1. A compound of the general formula

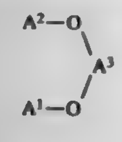

I

wherein

A^1 and A^2 each are a cross-linkable mesogenic residue; and

A^3 is (R,R)- or (S,S)-trans-1,2-cyclohexyl-diyl.

5,700,394

METHOD FOR THE TREATMENT OF TEXTILE FIBERS

Jayanti V. Isharani, Greensboro, N.C.; William M. Hung, and Kai C. Su, both of Alpharetta, Ga., assignors to Ciba Specialty Chemicals Corporation, Tarrytown, N.Y.

Filed Jan. 13, 1995, Ser. No. 372,636

Int. Cl.[6] C09K *11/06*

U.S. Cl. 252—301.21 **16 Claims**

1. A method of improving the tear resistance of a textile fiber material, which comprises treating the textile fiber material with 0.1 to 6.0% based on the weight of the textile fiber material, of a compound of the formula (1)

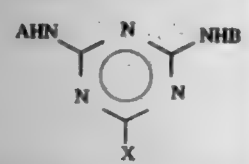

(1)

wherein A is the radical of a UV absorber B is the radical of a UV absorber and X is F or Cl,

with the proviso that at least one of A and B is substituted by at least one SO_3H or COOH group or a salt thereof which is bonded directly to an aromatic ring.

5,700,395

DISPERSANTS

Dean Thetford, Rochdale, and John David Schofield, Bury, both of United Kingdom, assignors to Zeneca Limited, London, England

PCT No. PCT/GB94/00379, § 371 Date Sep. 25, 1995, § 102(e) Date Sep. 25, 1995, PCT Pub. No. WO94/21368, PCT Pub. Date Sep. 29, 1994

PCT Filed Feb. 25, 1994, Ser. No. 525,725

Claims priority, application United Kingdom, Mar. 25, 1993, 9306222

Int. Cl.[6] B01J *13/00;* **B01F** *17/16*

U.S. Cl. 252—309 **10 Claims**

1. A dispersant comprising a polyethyleneimine residue carrying a plurality of poly(carbonylalkyleneoxy) chains each chain containing a plurality of repeat units derivable from 6-hydroxyhexanoic acid and at least one other hydroxycarboxylic acid selected from the group consisting of ricinoleic acid, 12-hydroxystearic acid, 12-hydroxydodecanoic acid, 5-hydroxydodecanoic acid, 5-hydroxydecanoic acid and 4-hydroxydecanoic acid; the weight ratio of units derivable from 6-hydroxyhexanoic acid to units derivable from the other hydroxycarboxylic acid or acids being in the range from 90:10 to 10:90, or a salt of said polyethyleneimine residue with an acid.

5,700,396

COSMETIC COMPOSITIONS AND AN EMULSION COMPOSITION

Masao Suzuki, Nara-ken; Koichi Saito, Amagasaki, and Masahide Nakata, Nishinomiya, all of Japan, assignors to NOF Corporation, Tokyo, Japan

Division of Ser. No. 66,017, May 27, 1993, Pat. No. 5,589,515. This application Oct. 18, 1996, Ser. No. 734,014

Claims priority, application Japan, Sep. 27, 1991, 3-276697; Dec. 11, 1991, 3-351403

Int. Cl.[6] B01J *13/00;* **A61K** *7/00;31/185*

U.S. Cl. 252—309 **12 Claims**

1. An emulsion composition which comprises 0.1 to 99 weight % of a first component and 99.9 to 1 weight % of a second component which is water soluble, the first component comprising 85 or more weight % of a cis-Δ9-octadecenoic acid or a derivative thereof, included within 90 weight % or more of a cis-Δ9-alkenoic acid or a derivative thereof, wherein the first component is either insoluble in the second component, dissolved in the second component or emulsified in the second component.

5,700,397

EMULSIFIER, EMULSION COMPOSITION, AND POWDER COMPOSITION

Hirokazu Maeda; Hitoshi Furuta; Taro Takahashi; Chiemi Takei; Hiroko Kurita, all of Kitasoma-gun, and Yoko Sato, Tsukuba-gun, all of Japan, assignors to Fuji Oil Co., Ltd., Osaka, Japan

PCT No. PCT/JP93/00793, § 371 Date Feb. 9, 1994, § 102(e) Date Feb. 9, 1994, PCT Pub. No. WO93/25302, PCT Pub. Date Dec. 23, 1993

PCT Filed Jun. 14, 1993, Ser. No. 193,105

Claims priority, application Japan, Jun. 16, 1992, 4-221879; Jun. 16, 1992, 4-221880; Nov. 20, 1992, 4-335267

Int. Cl.[6] B01J *13/00;* **A23L** *1/035;* **B01F** *17/00*

U.S. Cl. 252—312 **8 Claims**

1. An emulsifier comprising as an active ingredient a water-soluble hemicellulose obtained by heat-degradation of a soybean cotyledon in an acidic region followed by extraction, the water-soluble hemicellulose having a molecular weight from 5,000 to 1,000,000.

5,700,398

COMPOSITION CONTAINING A POLYMER AND CONDUCTIVE FILLER AND USE THEREOF

Marie Angelopoulos, Cortlandt Manor; Vlasta A. Brusic, Amawalk; Teresita Ordonez Graham, Irvington; Sampath Purushothaman, Yorktown Heights; Ravi F. Saraf, Briarcliff Manor, all of N.Y.; Jane Margaret Shaw, Ridgefield, Conn.; Judith Marie Roldan, Ossining, and Alfred Viehbeck, Fishkill, both of N.Y., assignors to International Business Machines Corporation, Armonk, N.Y.

Filed Dec. 14, 1994, Ser. No. 356,026

Int. Cl.[6] H01B *1/06*

U.S. Cl. 252—500 **13 Claims**

1. A composition comprising a thermoset or thermoplastic polymeric matrix, and a conductive filler component, wherein said filler component comprises electrically conductive metal particles and at least one conducting polymer selected from the group consisting of substituted and unsubstituted polyparaphenylenevinylenes, substituted and unsubstituted polyanilines, substituted and unsubstituted polyazines, substituted and unsubstituted polythiophenes, substituted and unsubstituted polyparaphenylenes, substituted and unsubstituted poly-p-phenylene sulfides, substituted and unsubstituted polyfuranes, substituted and unsubstituted polypyrroles, substituted and unsubstituted polyselenophene, substituted and unsubstituted polyacetylenes, mixtures thereof, and copolymers thereof.

5,700,399

SOLUBLE ALKOXY-GROUP SUBSTITUTED AMINOBENZENESULFONIC ACID ANILINE CONDUCTING POLYMERS

Shigeru Shimizu; Takashi Saitoh; Masashi Uzawa, and Yasuyuki Takayanagi, all of Yokohama, Japan, assignors to Nitto Chemical Industry Co., Ltd., Tokyo, Japan

Division of Ser. No. 361,577, Dec. 22, 1994, Pat. No. 5,589,108. This application Aug. 21, 1996, Ser. No. 700,994

Claims priority, application Japan, Dec. 29, 1993, 5-353698; Apr. 4, 1994, 6-089091; Jul. 13, 1994, 6-183882; Aug. 1, 1994, 6-199851

Int. Cl.[6] H01B *1/00;* **D02G** *3/00;* **B05D** *5/12*

U.S. Cl. 252—500 **9 Claims**

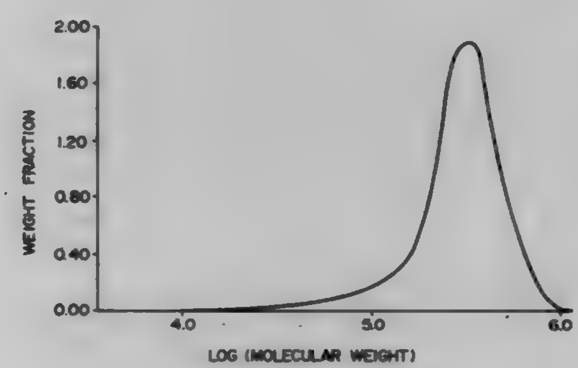

1. An electric conductor comprising a transparent conducting polymer film comprising an aniline conducting polymer (a) which comprises, as a repeating unit, at least one member selected from the group consisting of an alkoxy group-substituted aminobenzenesulfonic acid, an alkali metal salt of alkoxy group-substituted aminobenzenesulfonic acid, an ammonium salt of alkoxy group-substituted aminobenzenesulfonic acid and a substituted ammonium salt of alkoxy group-substituted aminobenzenesulfonic acid in an amount of about 100%, and is a solid having a weight average molecular weight of about 1900 or more at room temperature and being soluble in acidic, basic and neutral aqueous solutions and organic solvents.

5,700,400

METHOD FOR PRODUCING A SEMICONDUCTING MATERIAL

Keizo Ikai; Masaki Minami, and Mitsuo Matsuno, all of Yokohama, Japan, assignors to Nippon Oil Co., Ltd., Tokyo, Japan

Continuation-in-part of Ser. No. 260,195, Jun. 15, 1994, abandoned. This application Aug. 14, 1995, Ser. No. 514,580

Claims priority, application Japan, Jun. 15, 1994, 5-160651

Int. Cl.[6] H01B *1/04;1/02;* **C23C** *16/24;16/32*

U.S. Cl. 252—513 **13 Claims**

1. A method for producing a semiconducting material which comprises subjecting a hydrosilane monomer to dehydrogenative condensation followed by thermal decomposition to provide a semiconducting material containing silicon in an amount of 60 atomic % or more, where the hydrosilane monomer is selected from the group consisting of hydromonosilane, hydrodisilane and hydrotrisilane, and the hydromonosilane has the formula (I)

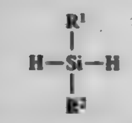

(I)

wherein R^1 and R^2 each are independently selected from the group consisting of hydrogen, C_1–C_{12} alkyl, C_3–C_{12} cycloalkyl, C_1–C_{12} halogenated alkyl, C_7–C_{12} aralkyl, C_7–C_{12} halogenated aralkyl, C_6–C_{12} aryl, C_7–C_{12} alkyl substituted aryl, and silyl groups of the formula (I')

$R^3R^4R^5Si$— (I')

wherein R^3, R^4 and R^5 each are independently selected from the group consisting of C_1–C_8 alkyl, C_3–C_{10} aryl and C_7–C_{10} alkyl-substituted aryl;

the hydrodisilane has the formula (II)

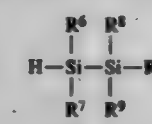

(II)

wherein R^6–R^{10} are independently selected from the group consisting of hydrogen, C_1–C_{12} alkyl, C_3–C_{12} cycloalkyl, C_1–C_{12} halogenated alkyl, C_7–C_{12} aralkyl, C_7–C_{12} halogenated aralkyl, C_6–C_{12} aryl, C_7–C_{12} alkyl substituted aryl, and silyl groups of the formula (I'), wherein at least one of R_6–R_{10} is hydrogen;

and the hydrotrisilane has the formula (III)

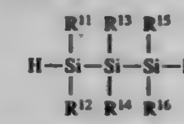

(III)

wherein R^{11}–R^{17} each are independently selected from the group consisting of hydrogen, C_1–C_{12} alkyl, C_3–C_{12} cycloalkyl, C_1–C_{12} halogenated alkyl, C_7–C_{12} aralkyl, C_7–C_{12} halogenated aralkyl, C_6–C_{12} aryl, C_7–C_{12} alkyl substituted aryl, and silyl groups of the formula (I'), wherein at least one of R^{11}–R^{17} is hydrogen.

wherein said dehydrogenative condensation occurs upon contacting the hydrosilane monomer with a catalyst comprising at least one metal or metal compound of Groups 3B, 4B and 8 of the Periodic Table, in an amount of 0.01–10 moles of catalyst per 100 moles of the hydrosilane monomer, under conditions including a temperature of 0° C.–400° C. and a pressure of 1 mmHg to 200 kg/cm^2 for a time of 5 minutes to 72 hours, to provide a condensate; and

said thermal decomposition results upon exposing the condensate to a temperature of 200° C.–1000° C. in an atmosphere selected from the group consisting of an inert gas, a reducing atmosphere or a vacuum of 10^{-5}–10^{-4} pa.

13. The method according to claim 1, wherein said semiconducting material has an optical band-gap (EO) of 0.1–2.0 eV.

5,700,401

LIQUID AUTO-LEVEL APPARATUS AND METHOD

Richard S. Weinberg, Palo Alto, and James W. Thomas, Los Altos, both of Calif., assignors to Microbar Systems, Inc., Santa Clara, Calif.

Filed Dec. 22, 1995, Ser. No. 577,560
Int. Cl.[6] B67D *5/08;* **B01D** *47/00*
U.S. Cl. 261—27 **20 Claims**

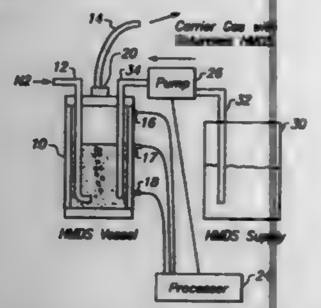

1. A tank apparatus for use in an integrated circuit fabrication process, comprising:
a tank configured to hold a liquid, said tank having a first inlet port configured to receive a carrier gas below a liquid surface level, an outlet port configured to release said carrier gas saturated with said liquid above said liquid surface level and a second inlet port configured to receive said liquid;
a sensor positioned in said tank at a predetermined liquid level, and configured to generate a fill sensor signal when said liquid surface level falls below said predetermined liquid level; and
a processor coupled to said sensor and configured to generate a fill signal in response to said fill sensor signal to initiate introduction of said liquid into said tank through said second inlet port to maintain said liquid surface level at a substantially constant level and to provide a substantially constant path length for said carrier gas in said liquid in order to maintain a substantially constant concentration of said liquid in said carrier gas.

5,700,402

CRANKCASE FUEL INJECTION SYSTEM FOR TWO-CYCLE INTERNAL COMBUSTION ENGINES

James S. Jones, 45 Crown Pl., Richardson, Tex. 75080, and James M. Jones, 413 W. Jefferson, Waxahachie, Tex. 75165

Filed Nov. 8, 1996, Ser. No. 747,035
Int. Cl.[6] F02M *59/14*
U.S. Cl. 261—35 **25 Claims**

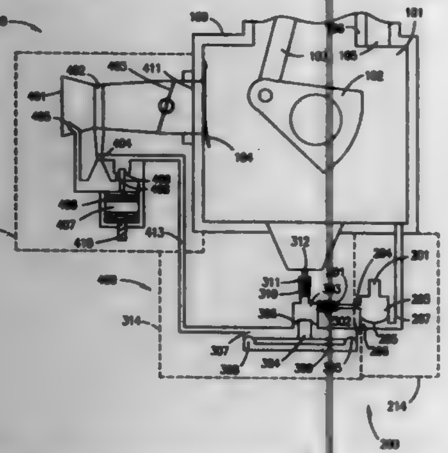

1. An injector system for use with an engine, said system comprising:
an air inlet body including:
a main air inlet,
a main air venturi in fluid communication with the main air inlet,
a main air outlet for allowing air passing through the main air inlet and the main air venturi to enter the crankcase of the engine,
a booster venturi in fluid communication with the main air venturi,
a booster venturi inlet for allowing the passage of air through the booster venturi to the main air venturi, and
a venturi signal passage in fluid communication with the booster venturi;
an injector assembly body including:
an ambient air chamber,
a venturi signal chamber in fluid communication with the venturi signal passage, and
an injector fuel chamber having an injector fuel chamber inlet and an injector fuel chamber outlet for allowing the passage of fluid from the injector fuel chamber into the engine;
a compound diaphragm having a first diaphragm separating the ambient air chamber from the venturi signal chamber, and a second diaphragm connected to the first diaphragm and separating the injector fuel chamber from the venturi signal chamber;
an injector fuel check valve for inhibiting the flow of fluid out of the injector fuel chamber inlet; and
a fuel pump for providing fluid to injector fuel chamber inlet.

5,700,403

DISTILLATION COLUMN EMPLOYING STRUCTURED PACKING WHICH REDUCES WALL FLOW

John Fredric Billingham, Tonawanda, and Michael James Lockett, Grand Island, both of N.Y., assignors to Praxair Technology, Inc., Danbury, Conn.

Filed Jan. 24, 1996, Ser. No. 590,663
Int. Cl.[6] B01F *3/04*
U.S. Cl. 261—112.2 **6 Claims**

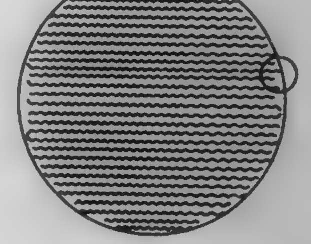

1. A heat and/or mass exchange structure comprising:
a shell including an outer vertical wall having an interior surface said shell containing a packing arrangement comprising:
a plurality of first corrugated heat and/or mass transfer sheets having corrugations angled to as to carry downward flowing liquid towards an interior region of said packing arrangement and away from an external periphery thereof, said external periphery being spaced away from said interior surface; and
a second corrugated heat and/or mass transfer sheet sandwiched between each pair of said first corrugated heat and/or mass transfer sheets and having corrugations angled so as to carry downward flowing fluid towards said external periphery, said second heat and/or mass transfer sheet having an outer edge which is spaced further away from said external periphery than co-located outer edges of said pair of said first corrugated heat and/or mass transfer sheets which sandwich said second corrugated heat and/or mass transfer sheet so as to be recessed from both said co-located outer edges.

5,700,404

PROCESS AND DEVICE FOR CASTING A LARGE-AREA CRYSTALLINE SALT BODY

Thomas Berthold, München, Germany, assignor to Siemens Aktiengesellschaft, Munich, Germany

PCT No. PCT/DE94/00567, § 371 Date Nov. 22, 1995, § 102(e) Date Nov. 22, 1995, PCT Pub. No. WO94/28205, PCT Pub. Date Dec. 8, 1994
PCT Filed May 16, 1994, Ser. No. 553,404
Claims priority, application Germany, May 25, 1993, 43 17 379.9; Sep. 22, 1993, 43 32 535.1
Int. Cl.[6] B29D *11/00;* **G02B** *1/00*
U.S. Cl. 264—1.21 **18 Claims**

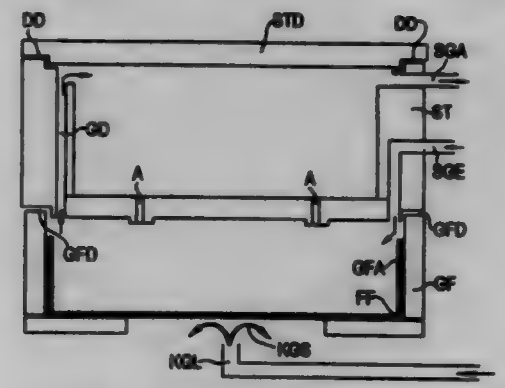

1. A process for the production of a polycrystalline salt body comprising the steps of:
providing a furnace having a single chamber heated to a uniform temperature for melting a starting material with a composition intended for the salt body;
providing a melting crucible which is inert to the salt melt,
providing a casting mould with a base,
producing a salt melt by inserting the crucible with the starting material and the casting mould into the chamber,
introducing the salt melt into the casting mould and directly cooling only the base to keep the base at a temperature which is 1°–50° C. below a solidification point of the salt melt to form a solid salt crust directly on the base of the casting mould,
maintaining the casting mould at a temperature below the solidification point until the supernatant salt melt has solidified completely into a polycrystalline salt body and then cooling the salt body.

5,700,405

METHOD OF LINING THE INTERNAL SURFACE OF A PIPE

Shigeru Toyoda, Saitama-ken; Shuichi Yagi, and Masaaki Itagaki, both of Kanagawa-ken, all of Japan, assignors to Tokyo Gas Co., Ltd., Tokyo, Japan

Filed Nov. 20, 1995, Ser. No. 560,928
Claims priority, application Japan, Nov. 28, 1994, 6-293500; Nov. 28, 1994, 6-293501; Nov. 29, 1994, 6-294734; Nov. 29, 1994, 6-294735
Int. Cl.[6] E04B *1/16*
U.S. Cl. 264—35 **1 Claim**

1. A method of lining an internal surface of a pipe, said method comprising the steps of:
inserting at least two lining pigs into the pipe from an open end thereof;
introducing an amount of a resin, necessary to line the internal surface of the pipe, into the pipe from the open end subsequent to the insertion of the at least two lining pigs;
inserting into the pipe behind the resin a) a resin transporting pig for pushing the resin through the pipe, b) a liquid absorbing material for absorbing liquid remaining on the pipe internal surface and c) a liquid blocking pig for blocking a liquid to prevent the resin from mixing with the liquid;

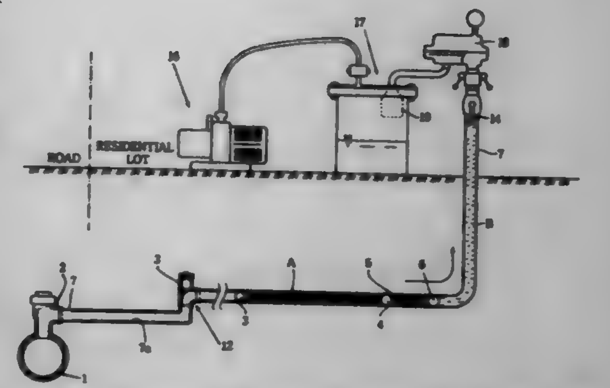

injecting an amount of pressurized liquid into the pipe subsequent to the insertion of the liquid blocking pig;
forcing the at least two lining pigs, the resin, the resin transporting pig, the liquid absorbing material and the liquid blocking pig to move forwardly through the pipe by the pressurized liquid until a front end of the resin reaches an inner end of the pipe;
sucking back the injected pressurized liquid such that the liquid blocking pig, the liquid absorbing material, the resin transporting pig, the resin and at least one of the at least two lining pigs are moved backwardly through the pipe so as to line the internal surface of the pipe with the resin wherein the liquid absorbing material absorbs the liquid remaining on the pipe internal surface, and a resin lining layer is evenly applied to the internal surface of the pipe by means of the at least one lining pig moving backwardly through the pipe, and
wherein at least one other of the lining pigs enters into a recess portion in the pipe during the forward or backward movement of the at least two lining pigs through the pipe, and is trapped in the recess portion, such that the resin lining layer is evenly applied to the internal surface of the pipe by means of the at least one lining pig which remains movable backwardly through the pipe.

5,700,406

PROCESS OF AND APPARATUS FOR MAKING A THREE-DIMENSIONAL ARTICLE

Herbert E. Menhennett; William Berdell Barlage, III, both of Easley, and Michael T. Nowak, Simpsonville, all of S.C., assignors to BPM Technology, Inc., Greenville, S.C.

Filed Apr. 26, 1996, Ser. No. 639,223
Int. Cl.[6] B29C *33/38;41/02;41/52*
U.S. Cl. 264—40.4 **70 Claims**

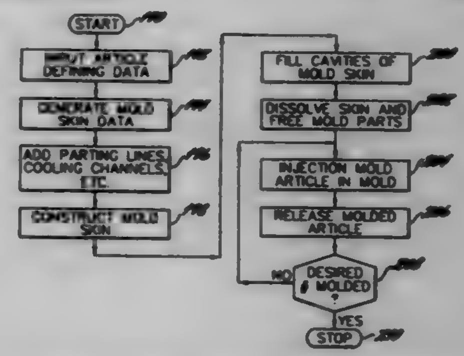

48. A method for making a three-dimensional article based upon article defining data, the method comprising the steps of:
providing a base having a penetrable surface;
dispensing build material based upon the article defining data to construct wall portions extending outwardly from the base and defining at least one cavity; and
penetrating the penetrable surface of the base and introducing fill material therethrough and into the at least one cavity so that the fill material defines at least a portion of the three-

dimensional article or defines at least one mold portion for facilitating molding of the three-dimensional article.

5,700,407

MOLDED POLYMERIC FOAM PREPARATION METHOD

Robert Michael Branger, P.O. Box 30444, Jackson, Wyo. 83001

Continuation of Ser. No. 389,462, Feb. 14, 1995, abandoned. This application Apr. 29, 1996, Ser. No. 639,717

Int. Cl.⁶ B29C *44/10*

U.S. Cl. 264—54 **9 Claims**

1. A process for the preparation of foamed polymeric articles consisting essentially of:

(a) formulating a foamable polymer composition comprising polymer, crosslinking agent and blowing agent, the blowing agent having a decomposition temperature;

(b) heating a mold to a temperature higher than the decomposition temperature of the blowing agent;

(c) filling less than about 25% of the volume of the mold with the foamable composition, sealing the mold and pressurizing the sealed mold with inert gas to a pressure of at least about 500 psi;

(d) heating the foamable polymer composition to above the decomposition temperature of the blowing agent and above the activation temperature of the crosslinking agent;

(e) maintaining the pressure within the mold to maintain the resulting decomposed blowing agent substantially in solution within the foamable polymer composition until the polymer in the foamable polymer composition is at least partially crosslinked; and

(f) releasing the pressure within the mold.

5,700,408

METHOD OF PRODUCING A CERAMIC COMPONENT BY SINTERING

Bernard Serole, Peyrins, France, assignor to W.C. Heraeus GmbH, Germany

Filed Sep. 5, 1995, Ser. No. 523,813

Claims priority, application France, Sep. 7, 1994, 94 10875

Int. Cl.⁶ C04B *33/32*

U.S. Cl. 264—65 **9 Claims**

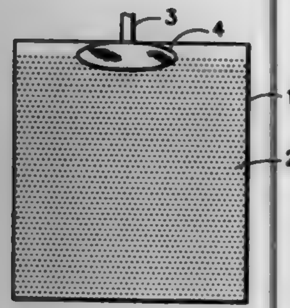

1. A method of producing a ceramic component by sintering, in which an oxygenous ceramic powder is formed into a green body which is introduced into a sintering chamber, heated in there, and dense sintered under application of a halogen-containing sintering auxiliary agent, characterized in that at a given sintering temperature the sintering auxiliary agent is released from a reservoir arranged separately from the green body, the halogen superficially reacting with the ceramic powder separating oxygen, and that the separated oxygen or a defined part of the separated oxygen is caught by means of an oxygen getter.

5,700,409

METHOD OF MOLDING AN ARTICLE

Arthur A. Corry, 6832 Trail Blvd., Naples, Fla. 34108

Filed Nov. 13, 1996, Ser. No. 748,397

Int. Cl.⁶ B28B *1/26;* **C04B** *33/28*

U.S. Cl. 264—87 **4 Claims**

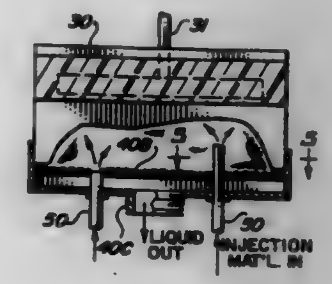

1. A method of molding an article capable of enduring temperatures of at least 1250° F. without deformation or deterioration composed of a compact mixture of fibers capable of enduring temperatures of at least 1250° F. comprising

cutting the fibers into lengths of not more than one eighth of an inch;

rapidly mixing the cut fibers with a liquid to form a pool of slurry;

providing a flexible mold having a flat planar bottom with an article-forming cavity opening along the bottom of the flexible mold;

providing a suction chamber having a plurality of entry ports for the flow of slurry into the mold cavity, an exit port for the flow of water from the slurry within the cavity and a perforated plate which prevents the flow of fibers from the cavity;

coupling the flexible mold to the suction chamber so that the article-forming cavity will receive slurry from the chamber's entry ports and expel water through the exit port;

submersing the suction chamber and flexible mold into the pool of slurry;

creating a vacuum within the suction chamber to cause slurry to flow into the article-forming cavity and expel water from the cavity thereby to form within the cavity an article of tightly compacted fibers;

removing the suction chamber and flexible mold from the pool of slurry;

uncoupling the mold from the suction chamber; and

flexing the flexible mold to cause the molded article to drop out of the bottom of the mold.

5,700,410

METHOD OF MANUFACTURING WAX MATRICES

Kouichi Nakamichi, Koga-gun; Shougo Izumi, Kameoka, and Hiroyuki Yasuura, Kusatsu, all of Japan, assignors to Nippon Shinyaku Co., Ltd., Japan

PCT No. PCT/JP93/01472, § 371 Date Jun. 7, 1995, § 102(e) Date Jun. 7, 1995, PCT Pub. No. WO94/08568, PCT Pub. Date Apr. 28, 1994

PCT Filed Oct. 14, 1993, Ser. No. 416,816

Claims priority, application Japan, Oct. 16, 1992, HEI-4-304986

Int. Cl.⁶ A61K *9/26;* **B29B** *7/46*

U.S. Cl. 264—122 **15 Claims**

1. A method of producing a wax matrix for controlling release of a pharmaceutically active material contained therein, said method comprising the steps of feeding a wax and the pharmaceutically active ingredient into a multi-screw extruder and thoroughly mixing the wax with the pharmaceutically active material using the multi-screw extruder, which is maintained at a temperature below

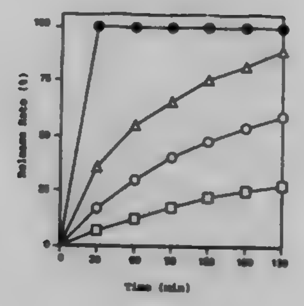

the melting point of the wax during the mixing, to form a wax matrix, wherein the wax matrix thus produced provides a controlled release of the active ingredient.

5,700,411

METHOD FOR THE FABRICATION OF THREADED CERAMIC PARTS

Edward P. Furlani, Lancaster; Dilip K. Chatterjee, and Syamal K. Ghosh, both of Rochester, all of N.Y., assignors to Eastman Kodak Company, Rochester, N.Y.

Filed Nov. 21, 1996, Ser. No. 752,133

Int. Cl.⁶ B29C *67/00*

U.S. Cl. 264—125 **7 Claims**

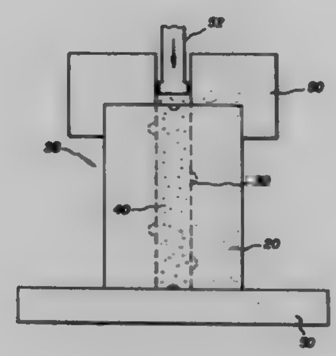

1. A method of fabricating a threaded micro-ceramic part, comprising the steps of:

a) forming a sacrificial fiber having a melting temperature;

b) winding the sacrificial fiber about a sintered ceramic plug generally in a shape of the threaded micro-ceramic part with the wound fiber corresponding to threads;

c) providing a green ceramic housing formed with a passage and placing the plug with the wound sacrificial fiber within the passage;

d) sintering at a temperature the green ceramic housing containing plug with the wound sacrificial fiber whereby the ceramic housing shrinks thereby converting the passage to a threaded cavity, wherein said sintering temperature is lower than the melting temperature of the sacrificial fiber;

e) removing the wound sacrificial fiber from the sintered housing;

f) removing the plug leaving behind a threaded mold which is adapted to form the threaded micro-ceramic part;

g) compressing ceramic powder within the threaded mold; and

h) sintering the compressed ceramic powder within said threaded mold to harden the ceramic powder to form the threaded micro-ceramic part whereby during sintering the formed threaded micro-ceramic part shrinks to permit its removal from the threaded mold.

5,700,412

PROCESS FOR MAKING LAMINAR ARTICLES

Vinodkumar Mehra, Wilmington, Del., and Robert Benham Fish, Jr., Parkersburg, W. Va., assignors to E. I. du Pont de Nemours and Company, Wilmington, Del.

Continuation-in-part of Ser. No. 277,814, Jul. 20, 1994, abandoned, which is a division of Ser. No. 143,764, Nov. 1, 1993, abandoned. This application Jan. 17, 1996, Ser. No. 587,693

Int. Cl.⁶ B29B *9/06;* **B29C** *47/06*

U.S. Cl. 264—143 **2 Claims**

1. A process for making a laminar, shaped article having improved fluid barrier and mechanical properties, that article comprising (i) polyolefin from the group consisting of polyethylenes, polypropylenes, polybutylenes, copolymers thereof, and mixtures thereof, said polyolefin being in the form of a continuous, matrix phase; and (ii) a barrier polymer, incompatible with polyolefin (i), in the form of a discontinuous distribution of thin, substantially two-dimensional, parallel and overlapping layers within said polyolefin matrix; said process comprising the steps of:

(a) producing coextruded heterogeneous pellets by melting in a first extruder a barrier polymer; and melting in a second extruder a compatibilizer (iii) for said polyolefin (i) and said barrier polymer (ii), said compatibilizer being an alkylcarbonyl substituted polyolefin, thereby producing two melt streams; combining said melt streams in a spin head to produce a coextruded strand having said compatibilizer (iii) as a sheath layer and said barrier polymer (ii) as a core; and cutting said strand into pellets;

(b) heterogeneously blending particles of a polyolefin (i) and said pellets (a); and heating the resultant blend to a temperature above the melting point of the highest melting component to form a heterogeneous melt;

(c) stretching the resultant heterogeneous melt 100–500 percent in at least one direction to form a stretched body; and

(d) cooling the resultant stretched body to a temperature below the melting point of the lowest melting component.

5,700,413

EXTRUDER DIE PLATE WITH REMOVABLE SPLITTERS

Fumii Higuchi, Mississauga, Canada; John J. Ianni, Medina, N.Y.; Fraser S. Smith, Burlington, Canada; Michael G. Hawkins, Rochester, and Joseph L. Leonardo, Penfield, both of N.Y., assignors to Xerox Corporation, Stamford, Conn.

Filed Mar. 27, 1996, Ser. No. 622,295

Int. Cl.⁶ B29B *9/06*

U.S. Cl. 264—145 **20 Claims**

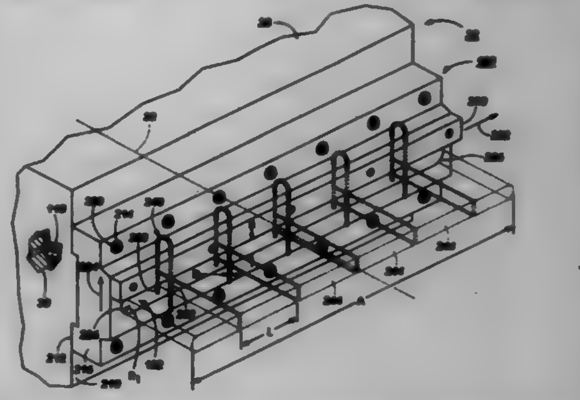

2. A die for the preparation of a toner resin in an extruder having a housing defining a housing aperture and a conveyor for conveying the resin through the housing aperture to form a stream of resin therein, the die comprising a member connected to a first end of said housing, said member including a body defining an opening therethrough and a splitter connected to the body, disposed adjacent said opening, and extending across the opening, for splitting a stream of resin passing through the opening in a first direction into two separate streams of resin, said splitter having a cross sectional

area in a plane normal to the flow of the toner resin substantially smaller than the cross sectional area of the opening so that stream may be split without a significant increase in the pressure within the extruder.

13. A method for preparing a toner resin, comprising:
adding base resin and chemical initiator to a toner extruder;
mixing the base resin and the chemical initiator within an opening formed in the extruder to form the mixed resin;
selecting a splitting die for use in the extruder so that the cross sectional area of the die in a direction normal to the flow of the resin is minimal with respect to that of the opening;
locating the splitting die at an end of the extruder and extending the die across the opening;
conveying the mixed resin within the extruder to the splitting die; and
drawing the mixed resin through the splitting die to form two separate streams of resin.

5,700,414

HEAT-INSULATING PANEL SERVING AS CONCRETE FORM AND METHOD OF MANUFACTURING THE SAME

Yuukou Ishikawa; Noboru Nishimoto, both of Tokyo; Michio Ootani, Matsudo; Tooru Tanibe, Funabashi; Kazushige Suzuki, Tokyo, and Kanesuke Kasahara, Atsugi, all of Japan, assignors to Nihon Cement Co. Ltd., and Fuji Kasei Kogyo Kabushiki Kaisha, both of Japan

Division of Ser. No. 331,715, Oct. 31, 1994, Pat. No. 5,631,075. This application Nov. 3, 1995, Ser. No. 552,600

Claims priority, application Japan, Mar. 23, 1994, 6-51718

Int. Cl.^{6} B29C *70/02;70/04*

U.S. Cl. 264—247 **2 Claims**

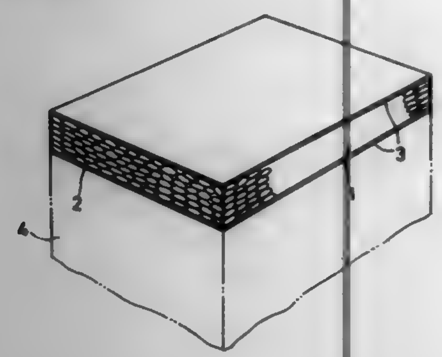

1. A method of manufacturing a heat-insulating panel serving as a concrete frame comprising the steps of:
cutting or shredding magnetic tapes, such as video tapes or cassette tapes, in lengths of 20 mm or less;
heating said cut or shredded pieces of magnetic tapes at a temperature from 100° to 200° C., thereby obtaining curled contracted pieces of magnetic tapes;
adding a thermosetting resin binder to said curled contracted pieces of magnetic tapes; and
compression-molding said curled contracted pieces of magnetic tapes mixed with said binder at a temperature from 100° to 200° C.

5,700,415

METHOD OF MOLDING SYNTHETIC RESIN AND APPARATUS FOR USE THEREIN

Toyohisa Hiroki, Chiba, and Tadashi Suzuki, Saitama-ken, both of Japan, assignors to Toska Co., Ltd., Tokyo, and Optec Co., Ltd., Saitama-ken, both of Japan

Filed Oct. 10, 1995, Ser. No. 541,724

Claims priority, application Japan, Oct. 19, 1994, 6-253281

Int. Cl.^{6} B29C *45/44*

U.S. Cl. 264—318 **5 Claims**

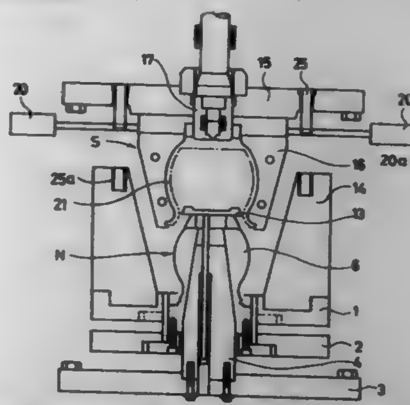

1. A method of molding a synthetic resin with the use of an apparatus comprising an outer mold (S) and an inner mold (N) arranged so as to form a cavity (C) inside the outer mold (S); said inner mold (N) comprising a central mold segment (4) having a part whose size is reduced toward its head and mold segments (6, 7) supported in a manner capable of being brought altogether around said central mold segment (4) to a size-reduced condition, and a cover plate (13) disposed to cover head ends of said central mold segment (4) and said mold segments (6, 7) in said size-reduced condition, the cover plate (13) together with said mold segments (6, 7) forming the inner surface of an article to be molded; said mold segments (6, 7) comprising side mold segments (6) and corner mold segments (7) each arranged between each adjacent side mold segments (6); said side mold segments (6) being slidably mounted on rail members (9) which are in turn slidably engaged in engagement channels (8) formed in side walls of said central mold segment (4); said corner mold segments (7) being applied with elastic force in directions toward the center of the apparatus:
the method including the steps of moving said central mold segments (4) to cause mold segments (6, 7) to be movable toward the center of the apparatus, and in a condition of said inner mold (N) of being reduced in its overall size, withdrawing the inner mold (N) out of a molded article supported in position by said outer mold (S).

5,700,416

PRESS MOLDING OF THERMOPLASTIC RESINS

Shohei Masui, Osaka; Kanemitsu Oishi, Shiga, and Kiyoshi Mitsui, Osaka, all of Japan, assignors to Sumitomo Chemical Company, Limited, Osaka, Japan

Continuation of Ser. No. 206,304, Jun. 14, 1988, abandoned, which is a continuation of Ser. No. 829,114, Feb. 14, 1986, abandoned. This application Nov. 15, 1991, Ser. No. 793,329

Int. Cl.^{6} B29C *43/34*

U.S. Cl. 264—325 **9 Claims**

1. A method for press molding a thermoplastic resin to produce a molded article comprising:
providing an unclosed mold having upper and lower halves,
initiating closing of said upper and lower halves of said mold,
decelerating said mold closing to a rate of less than 30 mm/sec.,
supplying a resin melt of said thermoplastic resin to a cavity of said unclosed mold comprising said upper and lower halves through at least one passage formed in a wall of said mold, said upper and lower halves being respectively attached to upper and lower platens of a vertically movable press such

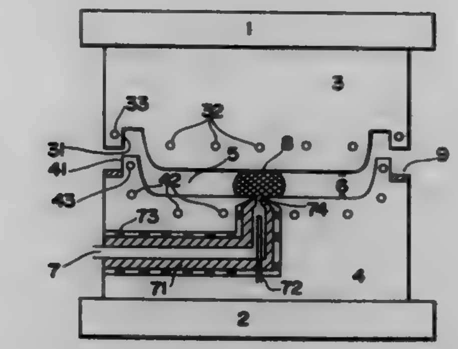

that introduction of said resin melt to said cavity is started when clearance of said cavity is not greater than 50 mm and completed when the clearance reaches a distance of (t+0.1) mm or larger when t is not less than 5.0 mm, or (t+1/2t) mm or larger when t is less than 5.0 mm and not less than 1.0 mm, or 1.5 mm or larger when t is less than 1.0 mm, "t" being the thickness of said molded article,
pressing said resin melt in said mold by closing said upper and lower halves of said mold without interruption of said closing of said mold from the completion of supply of said resin melt until completion of said mold closing, and
cooling the molded resin in said mold.

5,700,417

PULTRUSION PROCESS FOR PREPARING FIBER-REINFORCED COMPOSITE ROD

Alan Fernyhough, Walton On Thames, and Michael Fryars, Southampton, both of United Kingdom, assignors to Kabushiki Kaisha Kobe Seiko Sho, Kobe, Japan

Filed Jan. 26, 1996, Ser. No. 592,642

Claims priority, application United Kingdom, Jan. 27, 1995, 9301605

Int. Cl.^{6} B29C *35/10;* **C08J** *5/08;5/10;5/24*

U.S. Cl. 264—477 **18 Claims**

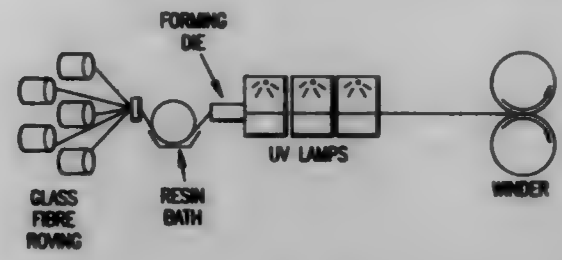

1. A process for preparing a fiber-reinforced composite rod, for use as a strength member, which comprises:
(a) pulling continuous reinforcing fibers through a bath containing a radiation-curable composition so as to impregnate the fibers with the composition, wherein the composition comprises a monomer which is polymerizable under the effect of ultraviolet (UV) radiation, a polymer which is dissolved or dispersed in the monomer and a photoinitiator;
(b) pulling the impregnated fibers through a die downstream of the bath; and
(c) exposing the impregnated fibers to UV radiation to effect polymerization of the monomer thereby producing a fiber reinforced composite.

5,700,418

METHOD OF MANUFACTURE OF COMPONENTS MADE OF SINTERED INDIUM-TIN-OXIDE SOLID-SOLUTION CRYSTALS

Michael Hörmann, Mömbris; David Francis Lupton, Gelnhausen; Jörg Schielke, Bruchköbel, and Friedhold Schölz, Rodenbach, all of Germany, assignors to W.C. Heraeus GmbH, Hanau, Germany

Filed Jul. 19, 1995, Ser. No. 504,334

Claims priority, application Germany, Jul. 29, 1994, 44 27 060.7

Int. Cl.^{6} C04B *33/34;37/00;* **A61K** *33/36;* **B29B** *35/71*

U.S. Cl. 264—604 **11 Claims**

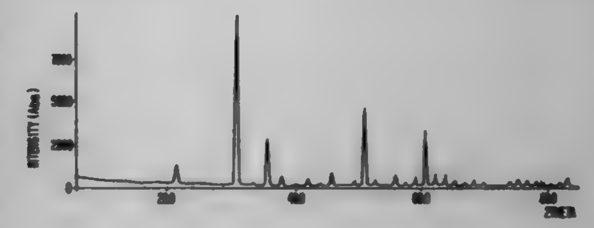

1. A method of manufacturing components from oxides of indium and tin comprising:
molding a green body from particles of a powder, wherein at least 97% by weight of the particles comprise indium-tin-oxide solid-solution crystals with a crystalline matrix of indium oxide, and
sintering the green body at a temperature of 800° to 1100° C., while the green body is compressed hot.

5,700,419

PROCESS FOR PRODUCING SINTERED ITO COMPACT

Osamu Matsunaga, Yokohama, and Akio Kondo, Kohnan, both of Japan, assignors to Tosoh Corporation, Japan

Filed Nov. 8, 1996, Ser. No. 745,625

Claims priority, application Japan, Nov. 8, 1995, 7-290080

Int. Cl.^{6} C04B *35/457*

U.S. Cl. 264—656 **8 Claims**

1. A process for producing a sintered ITO compact wherein an aqueous slurry comprised of indium oxide, tin oxide, a binder, a dispersant and an aqueous medium is cast in a mold, and the thus-obtained cast green body is sintered; said aqueous slurry being prepared by the steps of:
dispersing uniformly a tin oxide powder and a dispersant in an aqueous medium to give an aqueous slurry;
allowing the aqueous slurry to stand whereby coarse particles of tin oxide are sedimented;
separating by decantation an upper liquid layer of the aqueous slurry containing finely divided particles of tin oxide and the dispersant from a lower liquid layer containing the sedimented coarse particles; and then,
incorporating an indium oxide powder and a binder in the separated upper liquid layer containing finely divided tin oxide particles and the dispersant to give an aqueous slurry.

5,700,420
NON-OXIDIZING HEATING METHOD AND APPARATUS
Tsuguhiko Nakagawa; Ryosuke Yamaguchi; Hisashi Osanai; Junichi Hasunuma, and Takemi Yamamoto, all of Kurashiki, Japan, assignors to Kawasaki Steel Corporation, Kobe, Japan
PCT No. PCT/JP95/02470, § 371 Date Apr. 8, 1996, § 102(e) Date Apr. 8, 1996, PCT Pub. No. WO96/17215, PCT Pub. Date Jun. 6, 1996
PCT Filed Dec. 4, 1995, Ser. No. 624,642
Claims priority, application Japan, Dec. 2, 1994, 6-300044; Dec. 2, 1994, 6-300045; Jun. 30, 1995, 7-166207
Int. Cl.[6] F27D *7/02;* **B22D** *11/10*
U.S. Cl. 266—44 **14 Claims**

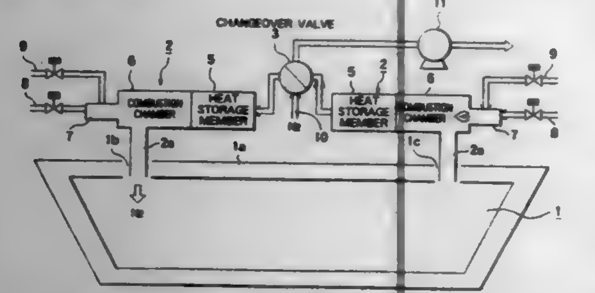

1. A non-oxidizing heating method characterized in that in heating the inside of a furnace which requires a non-oxidizing atmosphere by a high temperature non-oxidizing gas, an operation to heat a non-oxidizing gas to between 1200° to 1300° C. is repeated while changing over a plurality of heat storage type heaters alternately, and the obtained high temperature non-oxidizing gas is continuously supplied.

5,700,421
CUTTING NOZZLE ASSEMBLY FOR A POSTMIXED OXY-FUEL GAS TORCH
Claude Bissonnette, 232 11 St. West, Cornwall, Ontario, Canada, K6H 3B2
Filed Nov. 25, 1992, Ser. No. 981,352
Int. Cl.[6] B23K *7/00*
U.S. Cl. 266—48 **15 Claims**

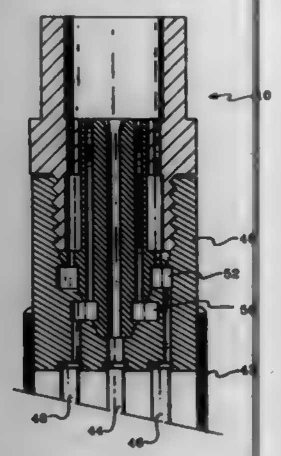

4. A cutting nozzle assembly for a postmixed oxy-fuel gas torch, comprising:

a nozzle having an inner end adapted for being received in a head of the torch and an outer end for discharging oxygen and fuel gases, an axial bore that extends between the inner and outer discharge end for discharging cutting oxygen gas, and a first and second plurality of spaced-apart gas discharge bores arranged in an inner and outer concentric ring around the axial bore, the inner ring of bores being in fluid communication with a fuel gas conduit of the torch and extending through the nozzle to the discharge end thereof, and the outer ring being in fluid communication with a preheat oxygen gas conduit of the torch and extending through the inner end of the nozzle to a hollow chamber defined by a side wall of a retainer nut for coupling the nozzle to the torch;

a side wall of the retainer nut including a spiral thread on an outer periphery thereof and an annular flange on an inner periphery thereof, the annular flange including a plurality of spaced-apart preheat oxygen discharge bores which communicate with the cavity; and

a shroud affixed to the retainer nut, the shroud defining a cylindrical passage which surrounds the discharge orifices for preheat oxygen, fuel gas and cutting oxygen whereby a more narrow cut is achieved to conserve metal at the cut and increase efficiency of cutting as compared with a similar nozzle not having a shroud.

5,700,422
MOLTEN METAL SUPPLY DEVICE
Hirotake Usui; Kazuya Matsuura, and Shin Nitta, all of Tokyo, Japan, assignors to Ryobi Ltd., Hiroshima-ken, Japan
Filed Apr. 10, 1996, Ser. No. 630,747
Claims priority, application Japan, Apr. 14, 1995, P7-113866; Apr. 14, 1995, P7-113867
Int. Cl.[6] C21D *11/00*
U.S. Cl. 266—94 **14 Claims**

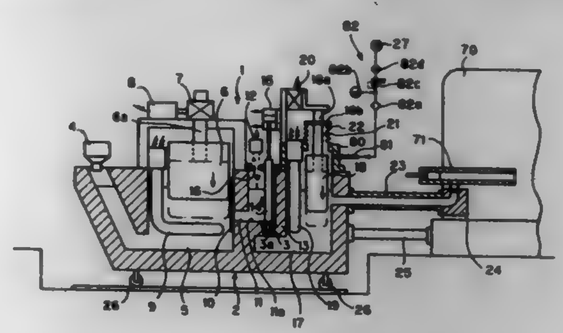

1. A molten metal supply device for supplying a molten metal to an injection sleeve of a die-casting machine, the molten metal supplying device including:

a holding furnace for holding the molten metal;

a partition wall provided in the holding furnace so as to divide the holding furnace into a holding chamber and a supply chamber and to provide fluid communication between the holding chamber and the supply chamber;

and the improvement comprising:

blocking means movable between a fluid communication position and a blocking position for selectively blocking fluid communication between the holding chamber and the supply chamber;

supply conduit means provided between the supply chamber and the injection sleeve for supplying the molten metal from the supply chamber to the injection sleeve, the supply conduit means having a duct connected to the holding furnace and a mouthpiece connecting the duct to the injection sleeve;

an injection port through which the molten metal is introduced into the injection sleeve;

surface level detection means for detecting a surface level of the molten metal within the mouthpiece at a position immediately below the injection port in the holding furnace; a first immersion body vertically movably provided in the holding chamber;

first drive means for moving the first immersion body downwardly to introduce the molten metal from the holding chamber to the supply chamber until the liquid surface level is detected by the detection means when the blocking means is in the communication position; a second immersion body vertically movably provided in the supply chamber; and

second drive means for moving the second immersion body downwardly to supply the molten metal from the holding chamber to the injection sleeve when the blocking means is in the blocking position.

5,700,423
HEARTH ROLL WITH SUPERIOR ENDURANCE CAPACITY
Yang Gao, Saitama-ken, Japan, assignor to Praxair S.T. Technology, Inc., Danbury, Conn.
Filed Aug. 23, 1995, Ser. No. 518,350
Claims priority, application Japan, Aug. 26, 1994, 6-225590
Int. Cl.[6] C21D *1/00;* **C23C** *4/10*
U.S. Cl. 266—103 **5 Claims**

1. A continuous annealing furnace for annealing sheet strips which employs a hearth roll characterized by a cermet thermal spray layer on the surface of the roll body where the thermal spray layer is composed of (1) a heat resistant MCrAlY alloy where M is at least one metallic element from the group of Fe, Ni, and Co, with the amount of Al to be below 10 at. % and the combined amount of Al and Cr between 13 at. % and 31 at. % combined with (2) an oxide ceramic constituting between 5–90 wt. % of the thermal spray coating which has low reactivity with manganese oxide.

5,700,424
SYSTEM FOR PREPARING ALUMINUM ALLOY STRIP HAVING IMPROVED FORMABILITY AND BAKE HARDENABILITY
Mamoru Matsuo, and Zhu Yan, both of Tokyo, Japan, assignors to Sky Aluminium Co., Ltd., Tokyo, Japan
Filed Mar. 6, 1996, Ser. No. 610,547
Int. Cl.[6] C21D *9/56*
U.S. Cl. 266—108 **7 Claims**

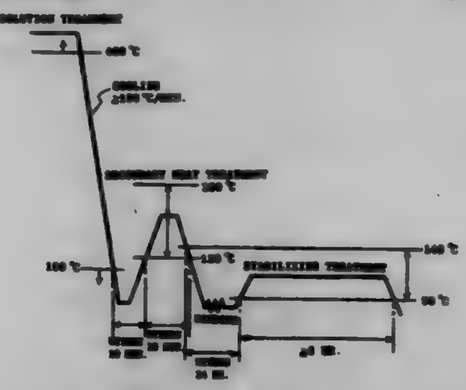

1. A system for preparing an aluminum alloy strip having improved formability and bake hardenability and a minimized secular change at room temperature, the aluminum alloy consisting essentially of in % by weight, 0.3 to 1.5% of Mg, 0.5 to 2.5% of Si, and the balance of aluminum, said system comprising

means for continuously unraveling a rolled strip of the aluminum alloy from its coil,

a continuous heat treatment section for continuously receiving the rolled strip from said unraveling means, heat treating it, and delivering it outward,

means for continuously winding up the rolled strip exiting from the continuous heat treatment section into a coil form, and

means for holding the coil of rolled strip at a temperature in the range of 50° to 140° C. for at least 3 hours,

said continuous heat treatment section including

a first accumulator for continuously receiving the strip from said unraveling means and feeding it downstream,

a primary heating zone disposed downstream of said first accumulator for continuously receiving the strip therefrom and heating it to a temperature of at least 480° C.,

a first cooling zone disposed downstream of said primary heating zone for continuously receiving the strip therefrom and cooling it at a rate of at least 100° C./min. to a temperature of not greater than 100° C., and

a secondary heating zone disposed downstream of said first cooling zone for continuously receiving the strip therefrom and heating it to a temperature in the range of 120° to 250° C. within 10 minutes from the end of cooling.

5,700,425
DEVICE FOR THE PRETREATMENT OF ELECTRONIC SCRAP
Antonio Maria Celi, Anagni Località Paduni-Casarese Frosinone, Italy
Filed Oct. 31, 1994, Ser. No. 332,142
Claims priority, application Italy, Nov. 3, 1993, RM93A0724
Int. Cl.[6] C22B *1/00*
U.S. Cl. 266—145 **4 Claims**

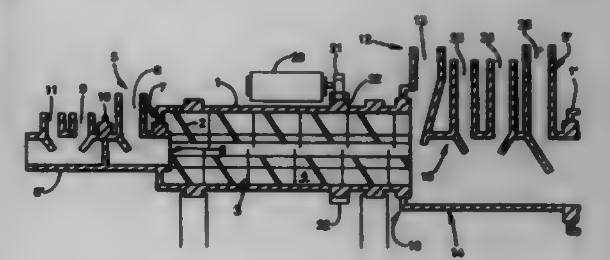

1. A device for the pretreatment of electronic scrap, which comprises

a cooling cylinder (1') and a working cylinder (1), said working cylinder having a worm screw (2) fixed on an inner surface, and input and output ends;

means (20, 21, 22) for rotating said working cylinder (1) selectively in opposite directions;

means for inputting (6, 6') and means for removing (14) respectively into and from said working cylinder (1) electronic scrap to be treated, and

means for inputting (13; 25) and means for removing (8) inert gas as thermal exchange fluid respectively into and from said working cylinder (1).

5,700,426
METHOD FOR DECONTAMINATING OR STERILIZING "IN SITU" A VACUUM SEALED CONTAINER AND DEVICE FOR IMPLEMENTING SUCH METHOD
Roland Schmitthaeusler, Montigny-le-Bretonneux, and Annie Bardat, Limours, both of France, assignors to Foundation Nationale de Transfusion Sanguine, Paris Cedex, France
Continuation of Ser. No. 117,193, Sep. 8, 1993, abandoned. This application Nov. 30, 1994, Ser. No. 351,111
Claims priority, application France, Mar. 8, 1991, 91 02812
Int. Cl.[6] A61L *2/20*
U.S. Cl. 422—29 **13 Claims**

1. A process for decontaminating or sterilizing at least one vacuum sealed container containing (a) biological material having the ability to replicate or (b) containing a pyrogenic substance, said process comprising the steps of dehydrating under vacuum said biological material having the ability to replicate or said pyrogenic substance, and introducing, after dehydration, while maintaining a vacuum (c) an aqueous solution selected from the group consisting of aqueous solutions of peracetic acid, hydrogen peroxide, a mixture of peracetic acid and hydrogen peroxide, and a mixture of alcohol and hydrogen peroxide, or (d) an aqueous gas capable of vaporizing under vacuum selected from the group consisting of (i) a gas which is a mixture of oxygen and humidified ozone and (ii) a gas which is a mixture of carbon dioxide, oxygen and humidified ozone into the container such that the (c) aqueous solution or (d) aqueous gas is kept in contact with the (a) dehydrated biological

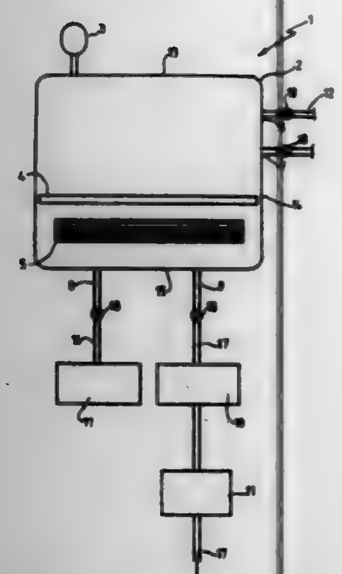

material or (b) dehydrated pyrogenic substance, such that condensation of the aqueous solution or aqueous gas occurs on the material.

5,700,427
APPARATUS FOR CARRYING OUT ELECTROCHEMILUMINESCENCE TEST MEASUREMENTS
Ali Ghaed, Bethesda; Jonathan K. Leland, Silver Spring, both of Md.; Glenn D. Zoski, Vienna; Jack E. Goodman, Arlington, both of Va., and John T. Grosser, Derry, N.H., assignors to IGEN International, Inc., Gaithersburg, Md.
Division of Ser. No. 61,676, May 14, 1993, Pat. No. 5,466,416. This application Jun. 5, 1995, Ser. No. 462,605
Int. Cl.[6] G01N *21/76;21/66*
U.S. Cl. 422—52 6 Claims

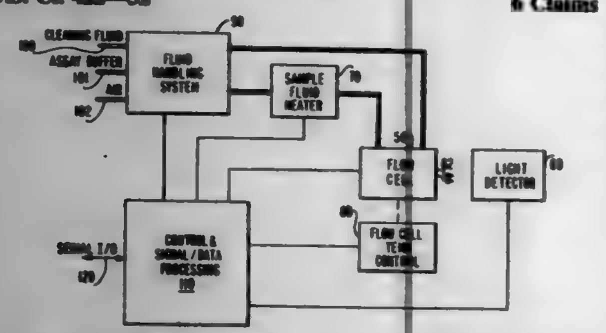

1. An apparatus for use in carrying out electrochemiluminescence test measurements, comprising:
a cell for containing an electrochemiluminescent sample fluid;
a working electrode having an electrode surface within the cell;
a supply of electrical energy coupled with the working electrode for supplying electrical energy to the electrochemilunminescent sample fluid within the cell;
temperature sensor means for sensing a temperature of the electrochemiluminescent sample fluid and for producing a temperature signal representing said temperature;
output signal producing means for producing an output signal representing a detected value based on light produced through electrochemiluminescence of the sample fluid within the cell; and
a programmable control system, coupled with the supply of electrical energy, the temperature sensor means, and the output signal producing means, for controlling the application of electrical energy to the electrochemiluminescent sample fluid and the production of the output signal in accordance with an assay control program stored in the programmable control system, said programmable control system further controlling the output signal producing means to adjust the output signal based upon the temperature signal to produce a temperature effect adjusted output signal.

5,700,428
FLUORESCENCE DETECTOR, AND A DEVICE FOR SUPPORTING A REPLACABLE SAMPLE CUVETTE IN A FLUORESCENCE DETECTOR
Leon Carlson, Täby, Sweden, assignor to CMA/Microdialysis Research AB, Stockholm, Sweden
PCT No. PCT/SE94/00615, § 371 Date Dec. 22, 1995, § 102(e) Date Dec. 22, 1995, PCT Pub. No. WO95/00832, PCT Pub. Date Jan. 5, 1995
PCT Filed Jun. 21, 1994, Ser. No. 569,259
Claims priority, application Sweden, Jun. 24, 1993, 9302193
Int. Cl.[6] G01N *21/64*
U.S. Cl. 422—82.08 13 Claims

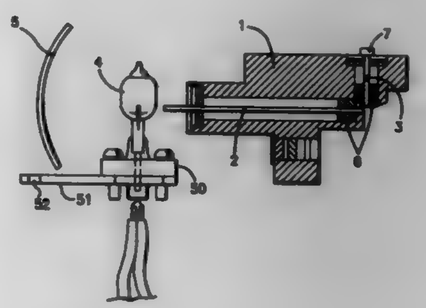

1. In a fluorescence detector for measuring fluorescence in a liquid comprising a light source for irradiating the liquid with fluorescence generating radiation, a filter for allowing fluorescence radiation generated by liquid to pass through, and a detector for detecting fluorescence radiation that has passed through the filter and for producing an electric signal corresponding to the fluorescence radiation, the improvement comprising:
an elongated, flat-shaped first light conductor having a first end in proximity to the light source, and a second end adapted to be positioned in proximity to an irradiated region of a liquid-containing tube having an inner diameter approximating the thickness of the first light conductor, said first light conductor having a length which is at least 10 times said thickness, and functioning as a filter to provide a first filter effect which is pervious to ultraviolet light but impervious to wavelength ranges of generated fluorescence radiation;
an elongated, flat-shaped second light conductor having a first short side in proximity to the detector, and a second short side adapted to be positioned in proximity to a detection region of the tube whose inner diameter approximates the thickness of the second light conductor, said second light conductor having a length which is at least 6 times that of its thickness, said second light conductor being pervious to fluorescence radiation and functioning as a filter to provide a second filter effect;
wherein the light conductors are positioned with their longitudinal axes in mutual transverse directions, and wherein in use, the second end of the first light conductor and the second short side terminate almost tangentially with the outer surface of the tube, and the irradiated region and the detection region coincide at least partially in the longitudinal direction of the tube.

5,700,429
VESSEL HOLDER FOR AUTOMATED ANALYZER
Jürg Bühler, Rothenburg, and Siegfried Müller, Meierskappel, both of Switzerland, assignors to Roche Diagnostic Systems, Inc., Branchburg, N.J.
Filed Mar. 22, 1996, Ser. No. 624,857
Claims priority, application Switzerland, Apr. 19, 1995, 1120/95
Int. Cl.[6] B01L *9/06*; G01N *35/04*
U.S. Cl. 422—104 12 Claims

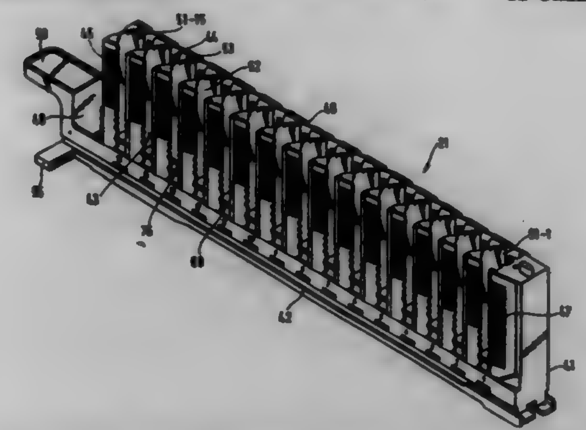

1. A vessel holder for receiving a plurality of vessels and holding the vessels within an analyzer, which comprises an elongate body having a base and containing a single straight row of parallelly oriented elongate chambers that are all perpendicular to the base and located at predetermined positions, adjacent chambers being separated by a partition, each chamber being configured and dimensioned for receiving one vessel that within the chamber can either be present or absent, each chamber having a first side wall and a second side wall positioned and dimensioned so that the first side wall and the second side wall in cooperation with the partitions and the base form the chamber, each side wall having an inside and an outside, the inside of the first side wall of each chamber bearing a first bar code label for detecting the absence of a vessel in the chamber, and the outside of the second side wall of each chamber bearing a second bar code label for detecting the position of the chamber in the vessel holder, the first bar code label and the second bar code label being readable from the side of the vessel holder formed by the second side walls.

5,700,430
DEVICE FOR DISPENSING A VOLATILE SUBSTANCE
James Bonnema, Middleton; Wen Der Wang, Wilmington, both of Mass.; Scott W. Demarest; Paul E. Furner, both of Caledonia, Wis., and Donald W. Hildebrandt, Racine, Wis., assignors to The Schawbel Corporation, Boston, Mass.
Filed Jul. 25, 1995, Ser. No. 506,555
Int. Cl.[6] A61L *9/02;9/03*
U.S. Cl. 422—125 31 Claims

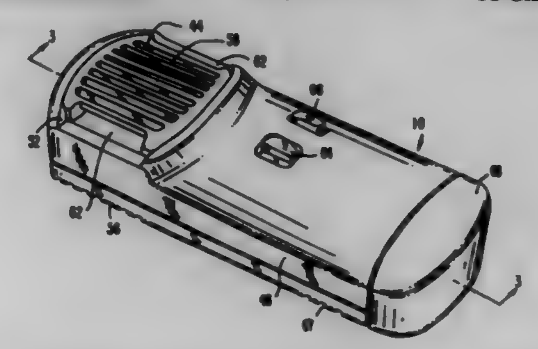

25. A device for dispensing a volatile substance, said device comprising:
a housing,
a portable heating appliance carried in said housing, said portable heating appliance comprising a source of butane gas, and heat means having a temperature related to the amount of said butane gas flowing to said heat means, said butane gas flowing in a stream,
a heat exchanger surrounding said heat means,
a pad of material containing said volatile substance, said pad carried on a compartment proximate said heat exchanger,
said heat exchanger includes a metal plate radially surrounding said heat means to be heated thereby and cause said pad of material to be heated,
said heat means and said metal plate providing air flow caused by said butane gas flowing in said stream to pass around said pad of material to heat, carry, and disperse the volatile substance in said pad,
wherein said housing remains cool relative to the temperature of the heat means and the heat exchanger.

5,700,431
METHOD AND A DEVICE FOR MONITORING THE INTERNAL CIRCULATION IN A FLUIDIZED BED REACTOR, AND A REACTOR PROVIDED WITH SUCH A DEVICE
Silvestre Suraniti, Paris, and Jean-Xavier Morin, Neuville aux Bois, both of France, assignors to GEC Alsthom Stein Industrie, Velizy-Villacoublay, France
Division of Ser. No. 499,912, Jul. 11, 1995, Pat. No. 5,623,967. This application Oct. 9, 1996, Ser. No. 731,005
Claims priority, application France, Jul. 28, 1994, 94 09365
Int. Cl.[6] B01J *8/18*
U.S. Cl. 422—139 2 Claims

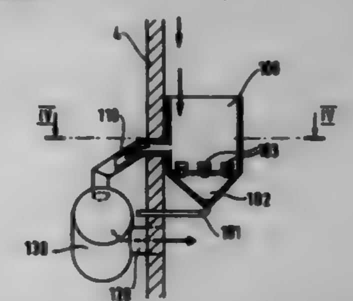

1. A method of continuously monitoring the internal circulation flow-rate of solid particles in a circulating fluidized bed reactor including a bottom zone into which a fluidization gas is injected, and a top zone surrounded by walls, said method comprising continuously sampling and locally measuring by an external measuring device, the flow-rate of solids running down along the walls.

5,700,432
FLUIDIZED-BED REACTOR AND A TEMPERATURE-CONTROLLING METHOD FOR THE FLUIDIZED-BED REACTOR
Minoru Tanaka, and Chi Wai Hui, both of Kurashiki, Japan, assignors to Mitsubishi Chemical Corporation, Tokyo, Japan
PCT No. PCT/JP95/00163, § 371 Date Dec. 15, 1995, § 102(e) Date Dec. 15, 1995, PCT Pub. No. WO95/21692, PCT Pub. Date Aug. 17, 1995
PCT Filed Feb. 7, 1995, Ser. No. 532,649
Claims priority, application Japan, Feb. 8, 1994, 6-014336; May 10, 1994, 6-096319
Int. Cl.[6] F27B *15/14*
U.S. Cl. 422—146 11 Claims

1. A temperature-controlling method for a fluidized-bed reactor for conducting an exothermic gas phase reaction for obtaining malic anhydride from butane in the fluidized-bed reactor, the fluidized-bed reactor having a plurality of heat-removing pipes disposed in the fluidized-bed, the method comprising:

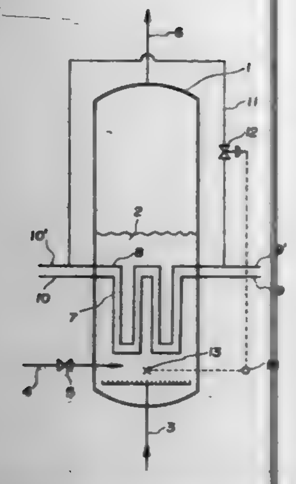

supplying a first coolant at a stationary velocity to at least one of the heat removing pipes,

simultaneously supplying a second coolant at a variable velocity to at least one of the other heat-removing pipes, the second coolant being a gas,

removing not less than 50% of the total amount of heat to be removed utilizing the latent heat of vaporization of the first coolant,

feeding the second coolant at the variable velocity depending on a temperature detected by a temperature detection section in the fluidized-bed,

providing a catalyst having a weight-average particle diameter of from 30 to 100 μm, containing 20 to 70% by weight of a fine powder with a particle diameter of not more than 44 μm and having a particle density of not more than 3000 kg/m^3, and

fluidizing the catalyst by introducing a gas from a lower portion of the fluidized-bed reactor.

5,700,433

ROTARY VALVE FOR REGENERATIVE THERMAL OXIDIZER

Geoffrey Somary, Arlington Heights, Ill., assignor to Eisenmann Corporation, Crystal Lake, Ill.

Filed Feb. 21, 1996, Ser. No. 604,168

Int. Cl.^{6} B01D *50/00*

U.S. Cl. 422—171 **9 Claims**

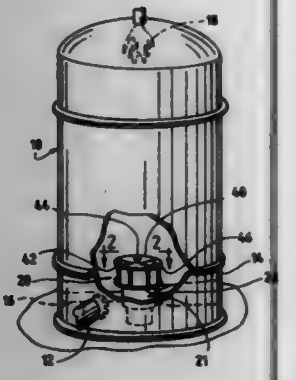

1. A system for use in a regenerative thermal oxidizer comprising a rotatable valve body between and relative to an upper surface and a fixed lower surface of said regenerative thermal oxidizer so as to direct gas flow in a substantially leak-free manner between the lower surface, the valve body and the upper surface,

said rotatable valve body being cylindrically shaped and rotatable about a cylinder axis, having upper and lower face portions for contacting said upper and lower surfaces, and having an external, circumferential, radially extending flange-like supporting member;

said upper surface constructed and arranged to engage and seal to said upper face of the rotatable valve body;

said lower surface constructed and arranged to engage and seal to said lower face of the rotatable valve body;

a plurality of adjustment assemblies spaced about the valve body and engaging the support flange;

each adjustment assembly secured to the fixed lower surface;

each adjustment assembly having a first mechanism for engaging the flange-like supporting member to position the valve body relative to the lower surface;

each adjustment assembly having a second mechanism for positioning the upper surface relative to the lower surface; and

each adjustment assembly having a third mechanism for engaging the support member to position the valve body relative to the upper surface.

5,700,434

REACTOR FOR CATALYTICALLY PROCESSING GASEOUS FLUIDS

Gerd Gaiser, Lange Äcker 4, D-72768 Reutlingen, Germany

PCT No. PCT/EP93/00995, § 371 Date Oct. 20, 1994, § 102(e) Date Oct. 20, 1994, PCT Pub. No. WO93/22544, PCT Pub. Date Nov. 11, 1993

PCT Filed Apr. 24, 1993, Ser. No. 325,252

Claims priority, application Germany, Apr. 30, 1992, 42 14 579.1

Int. Cl.^{6} F01N *3/10*

U.S. Cl. 422—173 **8 Claims**

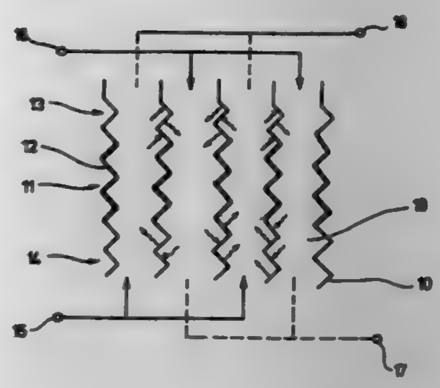

1. A reactor for catalytically processing gaseous fluids, comprising:

a plurality of fluid path-forming elements spaced from each other to form a plurality of alternatively arranged first channel means and second channel means through which fluid flows in opposite direction, each of said first and second channel means having inlet and outlet regions, wherein at least the inlets of said first channel means and at least the outlets of the second channel means are without catalyst, and wherein each of said first channel means and said second channel means have at least one region other than the inlet and outlet region thereof provided with a catalyst, with the inlet regions of the first channel means and the outlet regions of the second channel means providing for heat exchange between adjacent first and second channel means; and

means for feeding fluid to inlet regions of said first channel means and for discharging fluid from the outlet regions of said second channel means.

5,700,435

METHOD AND APPARATUS FOR SEPARATING A SUBSTANCE FROM A LIQUID MIXTURE BY FRACTIONAL CRYSTALLIZATION

Rudolf Bischof, Sevelen, Switzerland, assignor to Sulzer Chemtech AG, Winterthur, Switzerland

Filed Dec. 4, 1995, Ser. No. 566,792

Claims priority, application Switzerland, Dec. 8, 1994, 03 716/94

Int. Cl.^{6} C30B *7/08*

U.S. Cl. 422—245.1 **20 Claims**

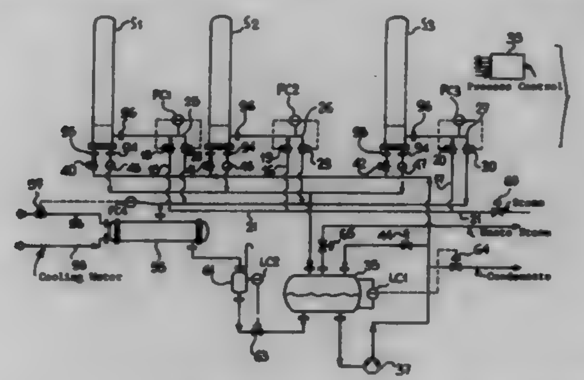

1. A method of separating substances from a liquid mixture by fractional crystallisation comprising

depositing a crystal medium layer on one side (76) of a wall (75) of a crystalliser (S1, S2, S3, 70);

cooling the other side (78) of said wall (75) to obtain a crystal layer; and

subsequently melting the crystal layer,

wherein, for the purpose of crystallisation, said method comprises the steps of

evaporating a heat exchange medium on the said other side (78) of the wall (75); and

controlling the pressure of the heat exchange medium in gaseous phase in the crystalliser (S1, S2, S3) in accordance with the temperature required for crystallisation.

5,700,436

PURIFICATION OF AIR IN ENCLOSED SPACES

David T. Doughty, Coraopolis; Richard A. Hayden, Pittsburgh; John W. Cobes, III, Harmony, and Thomas M. Matviya, Pittsburgh, all of Pa., assignors to Calgon Carbon Corporation, Pittsburgh, Pa.

Continuation-in-part of Ser. No. 008,722, Jan. 21, 1993, Pat. No. 5,352,370. This application Jun. 2, 1994, Ser. No. 252,699

Int. Cl.^{6} B01D *39/20;* **C01B** *17/00;17/16;21/00*

U.S. Cl. 423—210 **8 Claims**

1. A method for removing various impurities from contaminated air within confined spaces, said method comprising passing said air through a filtration media comprising a carbonaceous char, said char being prepared by:

a) carbonizing a bituminous material at temperatures below 700° C. in the presence of an oxidant;

b) oxidizing said bituminous material at temperatures below 700° C. during or after said carbonization;

c) contacting said carbonized and oxidized bituminous material at temperatures less than 700° C. with a nitrogen-containing compound, said nitrogen-containing compound being selected from the group consisting of urea and nitrogen containing compounds having at least one nitrogen functionality in which the nitrogen exhibits a formal oxidation number less than that of elemental nitrogen, and during or after said contacting, increasing the temperature to at least 700° C.; and

d) activating said carbonaceous char contacted with said nitrogen-containing compound using any one of H_2O or CO_2, or combinations thereof, with or without the addition of air, at temperatures above 700° C.

6. A filter for removing various impurities from contaminated air within confined spaces, said filter having incorporated therein a filtration media comprising a carbonaceous char, said char being prepared by:

a) carbonizing a bituminous material at temperatures below 700° C. in the presence of an oxidant;

b) oxidizing said bituminous material at temperatures below 700° C. during or after said carbonization;

c) contacting said carbonized and oxidized bituminous material at temperatures less than 700° C. with a nitrogen-containing compound, said nitrogen-containing compound being selected from the group comprised of ammonia, urea, melamine, or any derivative thereof having at least one nitrogen functionality in which the nitrogen exhibits a formal oxidation number less than that of elemental nitrogen, and during or after said contacting, increasing the temperature to at least 700° C. and

d) activating said carbonaceous char contacted with said nitrogen-containing compound with any one of H_2O, CO_2, O_2 or combinations thereof at temperatures above 700° C.

5,700,437

METHOD FOR REMOVING CARBON DIOXIDE FROM COMBUSTION EXHAUST GAS

Masumi Fujii; Taiichiro Suda; Yoshitsugu Hotta; Koichi Kitamura; Yukihiro Jinno; Tomio Mimura; Shigeru Shimojo, all of Osaka; Masaki Iijima, Tokyo, and Shigeaki Mitsuoka, Hiroshima, all of Japan, assignors to The Kansai Electric Power Co., Inc., Osaka, and Mitsubishi Jukogyo Kabushiki Kaisha, Tokyo, both of Japan

Continuation of Ser. No. 317,745, Oct. 4, 1994, abandoned. This application Jun. 10, 1996, Ser. No. 660,837

Claims priority, application Japan, Oct. 6, 1993, 5-250417; Mar. 9, 1994, 6-038265

Int. Cl.^{6} B01D *53/62*

U.S. Cl. 423—220 **5 Claims**

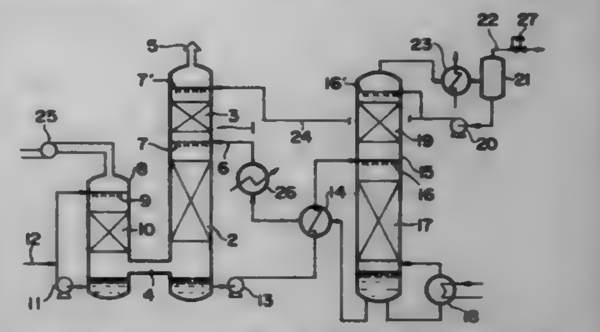

1. A method for removing carbon dioxide from a combustion exhaust gas comprising the steps of bringing the exhaust gas under atmospheric pressure into contact with a mixed aqueous solution of 100 parts by weight of an amine compound X and 1–25 parts by weight of an amine compound Y; said amine compound X having an alcoholic hydroxyl group and a primary amino group which is bonded to a tertiary carbon atom having two unsubstituted alkyl groups; said amine compound Y being a diaminotoluene (DAT) selected from the group consisting of 2,3-DAT, 2,4-DAT, 2,5-DAT, 2,6-DAT, 3,4-DAT and 3,5-DAT.

5,700,438

PROCESS FOR REMOVAL OF H2S FROM GAS PROCESSING STREAMS

John C. Miller, 32 Deer Point Dr., Hawthorn Woods, Ill. 60047

Filed Aug. 5, 1996, Ser. No. 695,156

Int. Cl.^{6} B01D *53/48;53/52*

U.S. Cl. 423—228 **14 Claims**

1. A process of removing H_2S and mercaptans from gas streams that may contain CO_2 to an H_2S level below 0.1 ppm which comprises the steps:

a) contacting gas streams which contain H_2S and mercaptans with an aqueous solution of copper complex era sterically hindered, water soluble, primary amine which solution contains a molar excess of copper relative to content of sterically hindered, water soluble primary amine: to form water insoluble copper sulfide and regenerated free sterically hindered, water soluble, primary amine;

b) separating and recovering the copper sulfide; and then,

c) forming additional copper complex by reacting the regenerated sterically hindered, water soluble, primary amine with a copper compound.

5,700,439

METHOD OF REMOVING HYDROGEN SULFIDE FROM HOT GAS MIXTURES

William J. Goyette, Towson, and Francis J. Keenan, Millersville, both of Md., assignors to Chemetals Technology Incorporated, Wilmington, Del.

Filed Jun. 7, 1996, Ser. No. 659,966

Int. Cl.⁶ B01J *20/32;* **B01D** *53/52*

U.S. Cl. 423—230 **15 Claims**

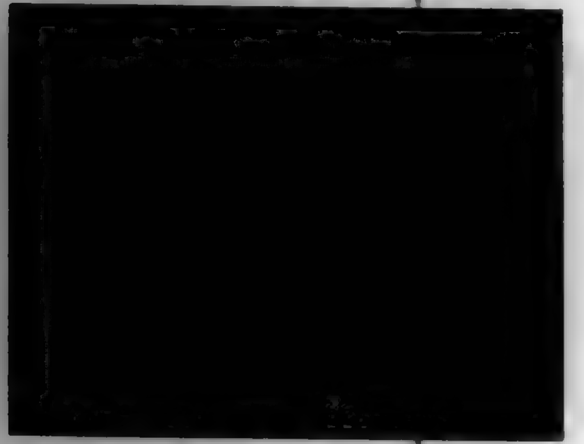

1. In a hydrocarbon refining process wherein vapor phase sulfide compounds are scavenged by a solid sorbent selected from the group consisting of oxides, aluminates, titanates, and ferrites of manganese, zinc, nickel, iron and mixtures thereof, the improvement comprising retarding sorbent agglomeration by externally coating said solid sorbent with a coating which does not interfere with the sorbent's ability to sorb, said coating from 5 to 20 microns of a substance inert to both sorbent and vapor phase sulfide compounds selected from the group consisting of alumina, silica, bentonite, and cerium oxide.

5,700,440

SELECTIVE OXIDATION OF HYDROGEN SULFIDE IN THE PRESENCE OF IRON-BASED CATALYSTS

Kuo-Tseng Li, and Yen-Chun Ker, both of Taichung, Taiwan, assignors to National Science Council, Taipei, Taiwan

Filed Sep. 5, 1995, Ser. No. 523,362

Int. Cl.⁶ B01D *53/52;53/86*

U.S. Cl. 423—231 **11 Claims**

1. A process for recovering elemental sulfur from a gas mixture containing hydrogen sulfide consisting essentially of contacting said gas mixture with an oxygen-containing gas to result in a gas having a molar ratio of hydrogen sulfide to oxygen that is less than 2 in an temperature range of from about 50° C. to about 400° C. in the presence of a supported iron (III) oxide catalyst, and a promoter for the selective oxidation of hydrogen sulfide to elemental sulfur, said promoter is a cerium component, a tin component, or an antimony component.

5,700,441

METHOD FOR THE CLEANING OF EXHAUST GAS AND PREVENTION OF EXPLOSIONS THEREIN

Ekkehard Kienow, Velbert; Bernd Morun, Essen; Thomas Schwertmann, Haan, and Heinz Hoberg, Aachen, all of Germany, assignors to Rheinische Kalksteinwerke GmbH, Wülfrath, Germany

Filed Oct. 5, 1994, Ser. No. 318,915

Claims priority, application Germany, Feb. 5, 1993, 43 03 450.0

Int. Cl.⁶ B10J *8/00*

U.S. Cl. 423—244.07 **22 Claims**

1. In a method of cleaning industrial combustion exhaust gas utilizing activated coke, the activated coke being capable of exploding upon the industrial combustion exhaust gas and the activated coke being mixed together; the activated coke having a grain size distribution including a portion of coarse grains and a portion of fine grains; the grains of the activated coke being entrainable in the flow of industrial exhaust gas; the method including; selecting at least one explosion suppressive material having a grain size distribution including a portion of coarse grains and a portion of fine grains; the grains of the at least one explosion suppressive material being entrainable in the flow of industrial combustion exhaust gas; mixing the activated coke and the at least one explosion suppressive material and thus forming a mixed powder; providing a sufficient amount of the activated coke in the mixed powder to remove a majority of the impurities in the industrial combustion exhaust gas; dispersing the mixed powder into a moving stream of industrial combustion exhaust gas and entraining the mixed powder in the moving stream of industrial combustion exhaust gas, the improvement comprising:

selecting the grain size distribution of said at least one explosion suppressive material to match the grain size distribution of the activated coke such that upon the activated coke and the at least one explosion suppressive material being dispersed in a gas medium, the coarse grains of the at least one explosion suppressive material have a speed of vertical descent which matches the speed of vertical descent of the coarse grains of the activated coke;

the mixed powder having a concentration of carbon up to about 40% and also being able to suppress explosions of the mixture of the industrial combustion gas and the activated coke; and

cleaning the industrial combustion gas by adsorption of portions of the industrial combustion gas with the mixed powder while suppressing explosions of the mixture of the industrial combustion exhaust gas and the activated coke with the at least one explosion suppressive material.

5,700,442

INSERTION COMPOUNDS BASED ON MANGANESE OXIDE USABLE AS THE POSITIVE ELECTRODE ACTIVE MATERIAL IN A LITHIUM BATTERY

Didier Bloch, St Ismier; Frédéric Le Cras, L'Isle D'Abeau, and Pierre Strobel, Saint-Egreve, all of France, assignors to Commissariat a l'Energie Atomique; Electricite de France Service National, both of Paris; Bollore Technologies S.A., Quimper, all of France, and Sadacem, S.A., Brussels, Belgium

Filed Jun. 19, 1995, Ser. No. 492,141

Claims priority, application France, Jun. 21, 1994, 94 07569

Int. Cl.⁶ C01G *45/12*

U.S. Cl. 423—599 **10 Claims**

1. Process for the preparation of an insertion compound based on manganese and lithium oxide by reaction in the solid state between the manganese oxide and a lithium compound, wherein a manganese oxide powder MnO_2-β, having a specific surface below 7 m^2/g and an average grain size below 10 μm, is reacted with a powder of a lithium compound selected from the group consisting of lithium oxides, hydroxides, carbonates and nitrates, which may or may not be hydrated, at a temperature of 150° to 500° C. for a

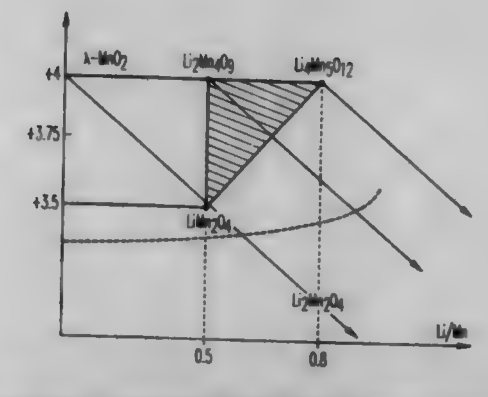

time adequate to convert said MnO_2-β into manganese and lithium oxide with a lacunary or stoichiometric spinel structure.

5,700,443

HYDROGEN STORING MEMBER AND PROCESS FOR STORING HYDROGEN INTO THE HYDROGEN STORING MEMBER

Keisuke Yamamoto, Atsugi, and Toshiyuki Komatsu, Hiratsuka, both of Japan, assignors to Canon Kabushiki Kaisha, Tokyo, Japan

Division of Ser. No. 345,714, Nov. 22, 1994, Pat. No. 5,567,303, which is a division of Ser. No. 34,648, Mar. 22, 1993, Pat. No. 5,391,366, which is a continuation of Ser. No. 562,904, Aug. 6, 1990, abandoned. This application Aug. 2, 1996, Ser. No. 691,587

Claims priority, application Japan, Aug. 4, 1989, 1-203036

Int. Cl.⁶ C01B *3/04;* **F17C** *11/00*

U.S. Cl. 423—647.7 **2 Claims**

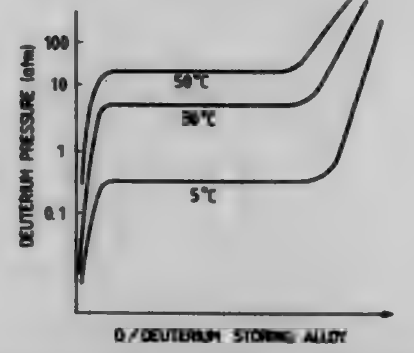

1. A process for preparing a deuterium storing member containing deuterium, which comprises:

(a) disposing a deuterium storing member in a temperature-controllable vessel, wherein the deuterium storing member comprises a thick first deuterium storing material member generating β phase which is capable of storing deuterium at a first temperature range and generating β phase which is capable of storing deuterium at a second temperature range set at a lower temperature than the first temperature range, a thin film of a second deuterium storing material provided on the thick first deuterium storing material member generating α phase which is capable of releasing deuterium at the first temperature range and generating β phase which is capable of storing deuterium at the second temperature range set at a lower temperature than the first temperature range, and a thin film of said first deuterium storing material provided on the thin film of the second deuterium storing material generating β phase which is capable of storing deuterium at the first temperature range and generating β phase which is capable of storing deuterium at the second temperature range set at a lower temperature than the first temperature range;

(b) setting the vessel at a temperature within the second temperature range and providing the inside of the vessel with a high pressure deuterium gas atmosphere; and

(c) setting the vessel at a temperature within the first temperature range and providing the inside of the vessel with a high pressure deuterium gas atmosphere.

5,700,444

CHEMOTACTIC PEPTIDE PHARMACEUTICAL APPLICATIONS

Paul O. Zamora, Albuquerque, N. Mex., and Richard J. Freer, Richmond, Va., assignors to Rhomed Incorporated, Albuquerque, N. Mex.

Continuation-in-part of Ser. No. 840,077, Feb. 20, 1992, Pat. No. 5,443,816. This application Jul. 2, 1993, Ser. No. 87,219

Int. Cl.⁶ A61K *51/00;* **A61M** *36/14*

U.S. Cl. 424—1.69 **13 Claims**

1. A high affinity chemotactic peptide-based pharmaceutical composition suitable for administration to a patient comprising:

a biological-function domain including at least two linked N-formyl-Met-Leu-Phe sequences wherein the sequences are linked by means of peptide side chains; and

a medically useful metal ion-binding domain comprising a sequence of amino acids containing sulfur or nitrogen atoms which are available for metal ion binding.

5,700,445

N-METHYL PIPERAZINE COMPOUNDS HAVING DOPAMINE RECEPTOR AFFINITY

Jian-Min Fu, Brampton, and Sumanas Rakhit, Mississauga, both of Canada, assignors to Allelix Biopharmaceuticals, Inc., Mississauga, Canada

Filed Dec. 12, 1994, Ser. No. 354,905

Int. Cl.⁶ A61K *51/00;* **A61M** *36/14*

U.S. Cl. 424—1.81 **9 Claims**

1. A compound of Formula I

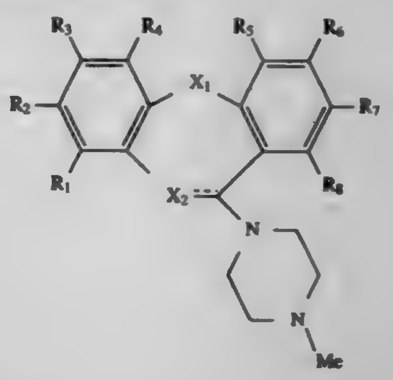

(I)

wherein

X_1 is NH;

X_2 is N=;

R_1 to R_4 to R_8 are H and R_5 is Cl, and

wherein said compound is 4-chloro-11-(4-methyl-1-piperazinyl)-5H-dibenzo[b,e] [1,4]diazepine.

5,700,446

SYNTHESIS OF FERROCENYL PHENYLTROPANE ANALOGS AND THEIR RADIO-TRANSFORMATION TO TECHNETIUM NEUROPROBES FOR MAPPING MONOAMINE REUPTAKE SITES

John L. Neumeyer, Wayland; Gilles Tamagnan, Framingham, and Yigong Gao, Hopedale, all of Mass., assignors to Neuro Imaging Technologies, LLC, Boston, Mass.

Filed Jun. 13, 1996, Ser. No. 662,656

Int. Cl.⁶ A61K *51/00;* **A61M** *36/14*

U.S. Cl. 424—1.85 **24 Claims**

1. A neuroprobe for mapping monoamine reuptake sites, the neuroprobe having the formula:

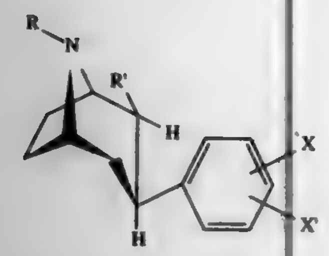

wherein:

X=F, Cl, Br, I, H or alkyl;

X'=F, Cl, Br, I, H or alkyl;

R=alkyl, halogen substituted alkyl, cycloalkyl, halogen substituted cycloalkyl, alkenyl, halogen substituted alkenyl, aryl or halogen substituted aryl; and

R'=—$(CH_2)_n$Y, wherein Y=—O—C(O)—Z, —C(O)—Z, or —NR"—C(O)—Z; and n=1–6; and wherein further R"=alkyl, cycloalkyl or H; and Z=

wherein M=rhenium or an isotope of rhenium, manganese or an isotope of manganese, or an isotope of technetium.

5,700,447

METHODS AND MATERIALS FOR THE DIAGNOSIS AND TREATMENT OF CONDITIONS SUCH AS STROKE

Richard J. Bucala, New York; Helen Vlassara; Anthony Cerami, both of Shelter Island, all of N.Y., and Kevin J. Tracey, Old Greenwich, Conn., assignors to The Picowder Institute for Medical Research, Manhasset, N.Y.

Continuation-in-part of Ser. No. 29,417, Mar. 11, 1993, which is a continuation-in-part of Ser. No. 887,279, May 21, 1992, abandoned. This application Oct. 7, 1994, Ser. No. 319,747

Int. Cl.[6] G01N *33/48*

U.S. Cl. 424—9.1 **8 Claims**

1. A method for estimating the course and extent of in vivo lipid oxidation in a mammal comprising measuring the presence and amount of AGE-lipids in said mammal.

5,700,448

USE OF PERSISTENT FREE-RADICALS IN MAGNETIC RESONANCE IMAGING

Klaes Golman, Rungsted Kyst, Denmark; Sven Andersson, Lomma, Sweden; Frode Rise, Oslo, Norway; Lars-Goran Wistrand, Lund, and Hakan Wikstrom, Groningen, both of Sweden, assignors to Nycomed Imaging AS, Oslo, Norway

Division of Ser. No. 190,045, Mar. 18, 1994, Pat. No. 5,435,991. This application Apr. 3, 1995, Ser. No. 415,662

Claims priority, application United Kingdom, Aug. 9, 1991, 91-17211.4; Aug. 12, 1991, 91-17418.5

Int. Cl.[6] A61B *5/055*

U.S. Cl. 424—9.33 **8 Claims**

1. An electron spin resonance enhanced nuclear magnetic resonance imaging contrast medium comprising a physiologically tolerable, persistent, water-soluble cyclic π-system free radical, said radical having an inherent linewidth in its esr spectrum of less than 500 mG, said radical having an electron delocalising π-system which comprises at least one homo- or hetero- tricyclic ring, and said radical comprising at least one pair of adjacent ring carbons of a $(C{=}C)_n$ moiety, where n is a positive integer, or an aryl substituent is substituted to form a fused ring of formula

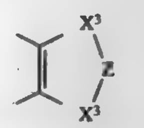

where X_3 is oxygen, sulphur, or SO_2, and Z is $C(CH_3)_2$ or CR^7_2 wherein R^7 is hydrogen or optionally hydroxylated methyl, with a center ring substituted by two oxygen atoms, together with at least one pharmacologically acceptable carrier or excipient.

5,700,449

DENTIFRICE COMPOSITION

Yasushi Katayama; Kouji Maeda; Ryozo Nakai; Yoshiyuki Murei, and Takao Okajima, all of Tochigi-ken, Japan, assignors to Kao Corporation, Tokyo, Japan

Filed Oct. 17, 1995, Ser. No. 544,278

Claims priority, application Japan, Oct. 18, 1994, 6-252031; Oct. 18, 1994, 6-252032

Int. Cl.[6] A61K *7/16;9/28;9/48*

U.S. Cl. 424—49 **23 Claims**

1. A capsule, comprising:

(i) a coating comprising agar; and

(ii) a dentifrice ingredient, encapsulated by said coating, wherein said capsule has an average size of from 0.3 to 3 mm.

5,700,450

METHODS FOR ENHANCING MELANIN SYNTHESIS IN MELANOCYTES USING DIACYGLYCEROLS AND USES THEREOF

Barbara A. Gilchrest, Brookline, Mass., and Philip R. Gordon, Philadelphia, Pa., assignors to The Trustees of Boston University, Boston, Mass.

Continuation-in-part of Ser. No. 934,872, Aug. 21, 1992, Pat. No. 5,352,440, which is a continuation-in-part of Ser. No. 624,453, Dec. 10, 1990, abandoned, which is a continuation of Ser. No. 175,129, Mar. 30, 1988, abandoned, and a continuation of Ser. No. 625,236, Dec. 10, 1990, abandoned, and a continuation of Ser. No. 625,405, Dec. 11, 1990, abandoned. This application Sep. 28, 1994, Ser. No. 314,470

Int. Cl.[6] A61K *7/42;31/22;31/225*

U.S. Cl. 424—59 **17 Claims**

1. A method of increasing pigmentation of vertebrate skin by increasing the melanin content of melanocytes present in vertebrate skin comprising topically applying to the skin of the vertebrate, or subcutaneously administering to the vertebrate, an effective amount of a diacylglycerol wherein the diacylglycerol comprises a hydroxyl in the three position and two carboxylic acid esters in the one and two positions, said carboxylic acid esters having from one to twenty four carbon atoms, and which enhances melanin synthesis in the melanocytes.

5,700,451

SUNSCREEN COMPOSITION

Jiang Yue; Lisa Renee Dew, both of West Chester, and Donald Lynn Bissett, Hamilton, all of Ohio, assignors to The Procter & Gamble Company, Cincinnati, Ohio

Filed May 24, 1995, Ser. No. 448,942

Int. Cl.[6] A61K *7/42;* **C01G** *23/047*

U.S. Cl. 424—59 **12 Claims**

1. A topical composition comprising:

a) as an active from about 1% to about 15% anatase crystal in amorphous TiO_2 chosen from the group consisting of;

1) a hydrogel comprising about 20% to about 60% solids comprising about 20% to about 90% anatase crystal in amorphous TiO_2 having average crystalline domain dimensions of about 3 nm to about 10 nm; and

2) a TiO_2 particle comprising about 20% to about 90% anatase form wherein the particles are from about 50 nm to about 150 nm in size; and

b) a cosmetically acceptable topical carrier.

5,700,452

COMPOSITIONS FOR IMPARTING AN ARTIFICIAL TAN AND PROTECTING THE SKIN FROM ULTRA-VIOLET RADIATION

George Endel Deckner; Francisco Antonio Pichardo; Noelle Carolyn Alban, all of Cincinnati, and Marsha Carolyn Sills, Fairborn, all of Ohio, assignors to The Procter & Gamble Company, Cincinnati, Ohio

Continuation of Ser. No. 371,060, Jan. 10, 1995, abandoned, which is a continuation of Ser. No. 73,276, Apr. 16, 1993, abandoned. This application Dec. 21, 1995, Ser. No. 576,267

Int. Cl.[6] A61K *7/40;7/42;7/44;7/00*

U.S. Cl. 424—59 **22 Claims**

1. An oil-in-water emulsion composition useful for providing an artificial tan and UV protection comprising:

(a) from about 0.1% to about 20% dihydroxyacetone;

(b) from about 0.1% to about 30% of a sunscreen agent;

(c) from about 0.1% to about 10.0% of a crosslinked cationic polymer of the formula: $(A)_l(B)_m(C)_n$ wherein (A) is a dialkylaminoalkyl acrylate monomer or its quaternary ammonium or acid addition salt, (B) is a dialkylaminoalkyl methacrylate monomer or its quaternary ammonium or acid addition salt, (C) is acrylamide, l is an integer of 0 or greater, m is an integer of 1 or greater, and n is an integer of 0 or greater, wherein said polymer contains a crosslinking agent selected from the group consisting of methlenebisacrylamides, diallyldialkyl ammonium halides, polyalkenyl polyethers of polyhydric alcohols, allyl acrylates, vinyloxyalkylacrylates, and polyfunctional vinylidenes;

(d) from about 0.1% to about 10% of a cationic emulsifier in the form of a quaternary ammonium salt having the formula:

$$\left[\begin{array}{c} R_1 \\ | \\ R_2-N-R_3 \\ | \\ R_4 \end{array}\right]^{\oplus} X^{\ominus}$$

wherein R_1 is a C_{12-22} alkyl group or R_5CO—$(CH_2)_n$— wherein R_5 is a C_{12-22} alkyl group and n is an integer from about 2 to about 6, R_2 is H or a C_{1-22} alkyl group, R_3 and R_4 are independently an H or a C_{1-3} alkyl group, and X is an anion selected from the group consisting of chloride, bromide iodide, acetate, phosphate, nitrate, sulfate, methyl sulfate, ethyl sulfate, tosylate, lactate citrate, glycolate, and mixtures thereof;

(e) from about 30% to about 99.6% water,

wherein said composition has a pH from about 2.5 to about 7.

5,700,453

LIPCOLOR COMPOSITION

Nobumasa Sato, Odawara, Japan, assignor to Kanebo, Ltd., Tokyo, Japan

Continuation of Ser. No. 31,596, Mar. 15, 1993. This application Mar. 6, 1996, Ser. No. 611,341

Claims priority, application Japan, Aug. 6, 1992, 4-233144

Int. Cl.[6] A61K *7/025*

U.S. Cl. 424—64 **8 Claims**

1. A lipcolor composition comprising

(a) at least one metal compound selected from the group consisting of salts of divalent and trivalent metals and hydroxides of divalent and trivalent metals, and

(b) a water-soluble salt of alginic acid,

and wherein the composition further comprises

(c) at least one red or orange lake color with aluminum, barium or zirconium having a COONa or COOK group in its structure and

(d) an oil component having appearance of liquid at a temperature of 20° C., and

wherein the lake color (c) is an aluminum, barium or zirconium lake of D. & C. Red No. 28 (C.I. No. 45410); Rose bengal (C.I. No. 45440); D.& C. Red No. 22 (C.I. No. 45380); D.& C. Orange No. 11 (C.I. No. 45425); Eosine YSK (C.I. No. 45380); Phloxine BK (C.I. No. 45410); or Rose bengal K (C.I. No. 45440).

5,700,454

COSMETIC COMPOSITION CONTAINING AN N-MERCAPTOALKYLALKANEDIAMIDE OR ONE OF ITS COSMETICALLY ACCEPTABLE SALTS AS REDUCING AGENT

Gérard Malle, Meaux, France, assignor to L'Oreal, France

Filed Nov. 10, 1994, Ser. No. 337,119

Claims priority, application France, Nov. 12, 1993, 93 13517

Int. Cl.[6] A61K *7/09*

U.S. Cl. 424—70.2 **4 Claims**

1. A cosmetic composition for the first step of an operation for permanent deformation of hair wherein disulphide bonds of keratin are reduced, the composition comprising at least one compound having the following formula (I):

$$HS-A-NH-CO-B-CO-N\begin{array}{l} \diagup R \\ \diagdown R' \end{array} \qquad (I)$$

in which:

A denotes the divalent radical —$(CH_2)_n$—, n being an integer from 2 to 5, or the divalent radical —$(CH_2)_2$—O—$(CH_2)_2$—,

B denotes a radical, said radical being:

(a) the divalent radical —$(CH_2)_m$—, m being an integer from 1 to 7,

(b) the divalent radical

$$-\underset{\displaystyle R_1}{\underset{|}{(CH)_p}}-\underset{\displaystyle R_2}{\underset{|}{(CH)_q}}-\underset{\displaystyle R_3}{\underset{|}{(CH)_r}}-$$

in which one of the groups R_1, R_2 and R_3 denotes a radical, said radical being a linear or branched alkyl radical containing from 1 to 4 carbon atoms, methoxymethyl, phenyl, benzyl, cyclohexyl or cyclopentyl, and the other two groups are a hydrogen atom, p, q and r being 0 or an integer from 1 to 4 and wherein $1 \leqq p+q+r \leqq 4$, and further wherein the p, q, or r corresponding to that radical R_1, R_2 or R_3 which is said radical and is not a hydrogen atom is an integer from 1 to 4,

(c) the divalent radical

$$-\underset{\displaystyle R_4}{\underset{|}{CH}}-\underset{\displaystyle R_5}{\underset{|}{CH}}-$$

in which R_4 and R_5 either, being identical or different, denote a linear or branched alkyl radical containing from 1 to 4 carbon atoms, or, together with the adjacent carbon atoms, form a cyclohexane or cyclohexene ring,

(d) the divalent radical

$$-\underset{\displaystyle R_6}{\underset{|}{CH}}-(CH_2)_t-\underset{\displaystyle R_7}{\underset{|}{CH}}-$$

in which one of R_6 and R_7 denotes an —NH_2 radical and the other denotes a hydrogen atom; t being equal to 0 or 1, or

(e) the divalent radical

$$-\underset{R_8}{\underset{|}{C}}=\underset{R_9}{\underset{|}{C}}-$$

in which R_8 and R_9 either, being identical or different, denote a hydrogen atom or a linear or branched alkyl radical containing from 1 to 4 carbon atoms or, together with the adjacent carbon atoms, form a benzene ring,

R and R', which are identical or different, denote:

either a hydrogen atom or a radical, said radical being a linear or branched alkyl radical containing from 1 to 4 carbon atoms or a linear or branched hydroxyalkyl radical containing from 1 to 5 carbon atoms,

or R denotes a hydrogen atom and R' denotes an aminoalkyl radical $-(CH_2)_v-NR_{10}R_{11}$ in which v is an integer from 1 to 3 and R_{10} and R_{11}, which are identical or different, denote a hydrogen atom or a linear or branched alkyl radical containing from 1 to 3 carbon atoms, R_{10} and R_{11} being incapable of simultaneously denoting a hydrogen atom,

or an organic salt or an inorganic salt of said at least one compound of formula (I), and a cosmetically acceptable carrier, wherein said composition additionally contains at least one disulphide, the composition being self-neutralizing.

5,700,455

WATER SOLUBLE, BIODEGRADABLE POLYMERIC MATERIALS FOR SKIN CARE, HAIR CARE AND COSMETIC APPLICATIONS

Rudolph Hinterwaldner, Munich, Germany, and Helmut H. Weldes, Ocean City, N.J., assignors to Permethyl Specialties, L.L.C., Milmay, N.J.

Continuation of Ser. No. 349,661, Dec. 5, 1994, abandoned. This application Sep. 10, 1996, Ser. No. 711,813

Int. Cl.[6] A61K *7/00;7/07*

U.S. Cl. 424—70.14 **2 Claims**

1. A skin care composition comprising:

(1) of from about 0.1% w/w to about 50.0% w/w of a polymeric material of the formula I:

$$H_2C=\overset{R^1}{\overset{|}{C}}-X-(R^2)_n-Y-A \qquad \text{I}$$

said polymeric material having a molecular weight of from about 500 to about 200,000 daltons,

wherein

A is a water soluble, biodegradable polymeric hydrocolloid containing a radical selected from the group consisting of hydroxy, amino, imino, thio and carboxy; said hydrocolloid is selected from the group consisting of gelatin, whey protein, casein, plant protein, whey protein hydrolyzate, casein hydrolyzate and plant protein hydrolyzate;

X is

$$-\overset{O}{\overset{\|}{C}}-,\ -\overset{O}{\overset{\|}{C}}-O-,\ -CH_2-,\ -O-\text{ or }-\overset{R^3}{\overset{|}{N}}-;$$

R^1 is H, —OH, —CN(=nitrile), halogen or C_1–C_4 alkyl;

R^2 is a saturated or unsaturated, at least bivalent hydrocarbon radical optionally substituted with one or more substituents selected from the group consisting of hydroxy-, amino-, C_1–C_8 alkyl-, C_1–C_8 alkoxy- and hydroxyalkyl groups which may be optionally substituted with one or more moieties selected from the group consisting of —CO—, —O—C(O)—O—, —C(O)—O—, — O—, —O—C(O)—, —S—, $-NR^4-$, —NH—C(O)—and —NH—C(O)—NH—;

Y is a connecting link to the main chain of the hydrocolloid A selected from the group consisting of —CO—, —O—C(O)— and —C(O)—O—;

R^3 and R^4 are independently H or alkyl; and

n is 0 to 5;

2) of from about 0.1% w/w to about 45.0% w/w of a cosmetically acceptable excipient selected from the group consisting of a nonionic surfactant, a cationic surfactant, an anionic surfactant, an emollient, a colorant, a preservative and a perfume; and

3) of from about 49.9% w/w to about 54.9% w/w water.

5,700,456

COMPOSITIONS FOR THE TREATMENT AND PROTECTION OF HAIR, BASED ON CERAMIDE AND/OR GLYCOCERAMIDE AND ON POLYMERS CONTAINING CATIONIC GROUPS

Claude Dubief, Le Chesnay, and Daniele Cauwet, Paris, both of France, assignors to L'Oreal, Paris, France

Filed Apr. 24, 1995, Ser. No. 426,799

Claims priority, application France, Apr. 21, 1994, 94 04881

Int. Cl.[6] A61K *7/06;7/48*

U.S. Cl. 424—70.17 **18 Claims**

1. A composition for the treatment and protection of hair, comprising, in a cosmetically acceptable medium:

at least one ceramide and/or glycoceramide and

at least one cationic polymer containing primary, secondary or tertiary amine groups or quaternary ammonium groups in the main chain, said at least one cationic polymer having a viscosity at a concentration of 1% by weight of active substance in water of less than 15 mPa.s; and

from 0 to less than 4 % by weight of at least one surfactant selected from anionic, amphoteric, and zwitterionic surfactants.

5,700,457

PROCESSED PRODUCT FOR SKIN AND HAIR TREATMENT

Gary W. Dixon, P.O. Box 5835, Kingsport, Tenn. 37663-0835

Division of Ser. No. 377,501, Jan. 24, 1995, Pat. No. 5,554,361, which is a continuation-in-part of Ser. No. 184,839, Jan. 21, 1994, abandoned. This application May 24, 1996, Ser. No. 653,151

Int. Cl.[6] C08J *3/28;* **A61K** *7/42;31/755*

U.S. Cl. 424—78.02 **16 Claims**

1. A photochemical process for, preparing topical, therapeutic, and internal carrier and delivery application compositions; in treatment of human and animal hair and skin, transdermal skin, mucosal and serosal areas; and joint areas; and internal systemic introduction, absorption and dissemination; said process comprising:

admixing the following substances and ingredients:

(a) from about 0.1% to about 4.00% by weight of fish liver oil;

(b) from about 0.2% to about 12.0% by weight of a mixture of iodine and povidone-iodine;

(c) from about 10.0% to about 45.0% by weight of a ingredient selected from a group including water and alcohol; and

(d) from about 40.0% to about 80.0% by weight of a ingredient selected from a group including mineral oil and baby oil;

said substances and ingredients being combined by admixing to a single fluid phase in a substantially transparent container; and

exposing the substances and ingredients in the container to light for a period of time such that the substances and ingredients undergo photochemical reaction to produce a product containing an iodinated fish liver oil and having at least binary fluid levels.

5,700,458

ACID-FUNCTIONALIZED SACCHARIDES AS POLYVALENT ANTI-INFECTIVES

W. Harry Mandeville, III, Lynnfield, and Venkata R. Garigapati, Waltham, both of Mass., assignors to GelTex Pharmaceuticals Inc., Waltham, Mass.

Filed Sep. 20, 1996, Ser. No. 717,264

Int. Cl.[6] A61K *31/765*

U.S. Cl. 424—78.07 **16 Claims**

1. A method for treating a microbial infection in a mammal, comprising administering to the mammal a therapeutically effective amount of a polymer comprising a polymerized monomer having one or more acid-functionalized glycoside moieties.

5,700,459

PHARMACOLOGICAL COMPOSITION CONTAINING POLYELECTROLYTE COMPLEXES IN MICROPARTICULATE FORM AND AT LEAST ONE ACTIVE AGENT

Volker Krone, Flörsheim am Main; Michael Magerstädt, Hofheim am Taunus; Axel Walch, Frankfurt am Main; Albrecht Gröner, Seeheim-Jugenheim, and Dieter Hoffmann, Marburg, all of Germany, assignors to Hoechst Aktiengesellschaft, Frankfurt am Main, Germany

Continuation of Ser. No. 88,581, Jul. 9, 1993, abandoned, which is a continuation of Ser. No. 689,643, Apr. 23, 1991, abandoned. This application Nov. 16, 1994, Ser. No. 341,164

Claims priority, application Germany, Apr. 25, 1990, 40 13 110.6; Nov. 6, 1990, 40 35 187.4

Int. Cl.[6] A61K *9/14*

U.S. Cl. 424—78.08 **13 Claims**

1. A pharmaceutical composition consisting essentially of:

a) a polyelectrolyte complex in microparticulate form,

wherein said polyelectrolyte complex has an average particle size of less than 15 μm and is comprised of a polybase and a polyacid,

wherein at least one of said polyacid and said polybase is a polymer, and

wherein when said polyacid is a polymer, the polymer is selected from the group consisting of xylan polysulfates, dextran sulfates, poly(amino acids), polysaccharide polysulfates, inulin sulfates, hydroxyethylstarch sulfates, polysaccharide polysulfonates, polysaccharide polyphosphates, polyphosphates, and derivatives of said polymer, and

wherein when said polybase is a polymer, the polymer is selected from the group consisting of poly-L-lysine, poly-α,β-(2-dimethylaminoethyl)-D,L-aspartamide, chitosan, lysine octadecyl ester, aminated dextrans, aminated cyclodextrins, aminated cellulose ethers, aminated pectins, and derivatives of said polymer; and

b) a pharmaceutically effective amount of at least one active agent selected from the group consisting of an enzyme inhibitor, an antigen, a cytostatic, an antiinflammatory agent, an antibiotic, a vaccine and an ultrasonic contrast agent.

5,700,460

METHODS OF ATTRACTING AND COMBATTING INSECTS

Thomas Charles Davidson, Durham, and Georgina M. Werner, Raleigh, both of N.C., assignors to Rhone-Poulenc Inc., Research Triangle Park, N.C.

Continuation-in-part of Ser. No. 419,609, Apr. 10, 1995, Pat. No. 5,614,182. This application Oct. 10, 1996, Ser. No. 731,132

Int. Cl.[6] A01N *25/00*

U.S. Cl. 424—84 **36 Claims**

1. A method for attracting insects, said method comprising offering to said insects for ingestion an effective attractant amount of a compound having the formula:

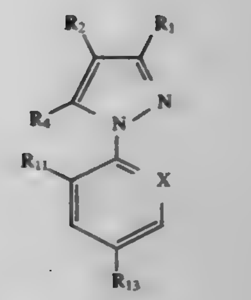

(I)

wherein

R_1 is CN or methyl;

R_2 is $-S(O)_nR_3$;

R_3 is alkyl or haloalkyl;

R_4 is hydrogen, halogen, $-NR_5R_6$, $-S(O)_mR_7$, alkyl, haloalkyl, $-OR_8$ or $-N=C(R_9)(R_{10})$;

each of R_5 and R_6, which are the same or different, is hydrogen, alkyl, haloalkyl, —C(O)alkyl or $-S(O)_rCF_3$; or R_5 and R_6 together form a divalent lower alkylene radical which is optionally interrupted by one or more heteroatoms selected from O, S and N;

R_7 is alkyl or haloalkyl;

R_8 is alkyl, haloalkyl or hydrogen;

R_9 is hydrogen or alkyl;

R_{10} is phenyl or heteroaryl, each of which is unsubstituted or is substituted with one or more substituents selected from the group consisting of hydroxy, halogen, —O—alkyl, —S—alkyl, cyano and alkyl;

each of R_{11} and R_{12}, which are the same or different, is halogen or hydrogen;

R_{13} is halogen, haloalkyl, haloalkoxy, $-S(O)_qCF_3$ or $-SF_5$;

each of m, n, q and r, which are the same or different, is 0, 1 or 2; and

X is nitrogen or $C-R_{12}$;

provided that when R_1 is methyl, R_3 is haloalkyl, R_4 is NH_2, R_{11} is Cl, R_{13} is CF_3, and X is N.

5,700,461

METHOD FOR INHIBITING HIV REPLICATION USING IL-4

Jerome Schwartz, New York, N.Y., assignor to Schering Corporation, Kenilworth, N.J.

PCT No. PCT/US93/07587, § 371 Date Feb. 16, 1995, § 102(e) Date Feb. 16, 1995, PCT Pub. No. WO94/04179, PCT Pub. Date Mar. 3, 1994

Continuation-in-part of Ser. No. 932,134, Aug. 19, 1992, abandoned. This PCT application Aug. 17, 1993, Ser. No. 387,719

Int. Cl.[6] A61K *38/20*

U.S. Cl. 424—85.2 **15 Claims**

1. A method for inhibiting HIV replication comprising administering a therapeutically effective amount of IL-4 to a patient infected with HIV, said effective amount being sufficient to inhibit said replication.

5,700,462

***BACILLUS CEREUS* STRAIN MS1-9, ATCC 55812**

Jo Handelsman; Eric V. Stabb; Lynn M. Jacobson; Robert M. Goodman; David W. Johnson, and Kevin P. Smith, all of Madison, Wis., assignors to Wisconsin Alumni Research Foundation, Madison, Wis.

Filed Nov. 12, 1996, Ser. No. 747,477

Int. Cl.[6] A01N *63/00;63/02;* **C12N** *1/20*

U.S. Cl. 424—93.46 **3 Claims**

1. A biologically pure culture of a bacteria having the identifying characteristics of *Bacillus cereus* MS1-9, ATCC 55812.

5,700,463

Patent Not Issued For This Number

5,700,464

PROCESS FOR EXTRACTING WITH LIQUIDS SOLUBLE SUBSTANCES FROM SUBDIVIDED SOLIDS

Barnard Stewart Silver, 4391 Carol Jane Dr., Salt Lake City, Utah 84124-3601

Continuation of Ser. No. 443,579, May 17, 1995, abandoned, which is a continuation-in-part of Ser. No. 289,923, Aug. 12, 1994, Pat. No. 5,456,893, which is a continuation-in-part of Ser. No. 106,077, Aug. 13, 1993, abandoned. This application May 24, 1996, Ser. No. 653,502

Int. Cl.[6] A61K *38/46;35/78;35/12*

U.S. Cl. 424—123 **42 Claims**

1. A process for extracting soluble substances from subdivided solids containing small particles and fines, said process employing at least one tank having first and second portions, at least one discharge outlet for the withdrawal of enriched extraction liquid from the at least one tank, at least one milli-screen, said at least one milli-screen having an upstream face and a downstream face with respect to the flow of liquid medium when the liquid medium is withdrawn through said at least one discharge outlet, a plurality of discrete milli-openings extending from the upstream side to the downstream side of said at least one milli-screen, said milli-openings comprising sizes less than about 0.095 inches across on the upstream side of the said at least one milli-screen, said process comprising the steps of:

introducing subdivided solids into a first portion of the at least one tank;

said subdivided solids containing fines;

said fines containing substances that can be extracted with a liquid medium;

introducing liquid extraction medium into a second portion of the at least one tank;

contacting the subdivided solids with the upstream face of said at least one milli-screen;

pushing the subdivided solids including small particles and fines toward the second portion of the at least one tank with said at least one milli-screen so that said subdivided solids move countercurrent to the flow of the liquid extraction medium;

separating at least some of said fines from the liquid extraction medium with said at least one milli-screen; and

withdrawing the enriched extraction liquid from the first portion of the at least one tank; and

withdrawing the spent subdivided solids from said second portion of the at least one tank.

5,700,465

BOVINE SERUM AND BOVINE IGG AS PREVENTIVES AND THERAPEUTIVES FOR BOVINE MASTITIS

Weng Tao, Katonah, N.Y.; Martin John Corbett, Mt. Holly, N.J., and Walter C. Pickett, Suffern, N.Y., assignors to American Cyanamid Company, Parsippany, N.J.

Filed Jan. 5, 1994, Ser. No. 177,833

Int. Cl.[6] A61K *39/395;39/40;* **C07K** *16/00;16/18*

U.S. Cl. 424—130.1 **7 Claims**

1. A method of treating infection caused by *Staphylococcus aureus* in bovine animal host cells comprising administering an appropriate dosage of monomeric bovine IgG2 immunoglobulin obtained from non-immunized animals to a bovine animal host whereby the IgG2 immunoglobulin reacts with IgG2-Fc receptors and stimulates neutrophil function in the host animal cell.

5,700,466

METHOD OF AMELIORATING OR PREVENTING SEPTIC SHOCK USING A MONOCLONAL ANTIBODY SPECIFIC TO CACHECTIN/TUMOR NECROSIS FACTOR

Stephen D. Wolpe, Arlington, Mass., and Anthony Cerami, Shelter Island, N.Y., assignors to The Rockefeller University, New York, N.Y.

Continuation of Ser. No. 286,477, Dec. 19, 1988, abandoned, which is a continuation-in-part of Ser. No. 766,852, Aug. 16, 1985, abandoned, which is a continuation-in-part of Ser. No. 414,098, Sep. 7, 1982, Pat. No. 4,603,106, which is a continuation-in-part of Ser. No. 351,290, Feb. 22, 1982, abandoned, which is a continuation-in-part of Ser. No. 299,932, Sep. 8, 1981, abandoned. This application Dec. 2, 1994, Ser. No. 348,764

Int. Cl.[6] A61K *39/395;39/40;38/19;* **C07K** *16/24*

U.S. Cl. 424—145.1 **2 Claims**

1. A method of ameliorating or preventing septic shock which comprises administering to a mammalian patient suspected of having a need for such administration an effective amount of a monoclonal antibody exhibiting the characteristics of a monoclonal antibody as produced by hybridoma cell line having the identifying characteristics of A.T.C.C. Accession No. HB 9228.

5,700,467

AMORPHOUS SILICON CARBIDE FILM AND PHOTOVOLTAIC DEVICE USING THE SAME

Masaki Shima, Uji, and Norihiro Terada, Ikoma, both of Japan, assignors to Sanyo Electric Co. Ltd., Osaka-fu, Japan

Filed Mar. 21, 1996, Ser. No. 619,327

Claims priority, application Japan, Mar. 25, 1995, 7-064171

Int. Cl.[6] H01L *31/075;31/0376*

U.S. Cl. 136—249 **9 Claims**

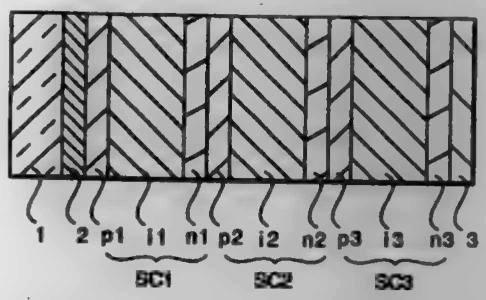

8. A photovoltaic device comprising a plurality of power generating portions laminated together, each portion comprising a p-type amorphous semiconductor layer, an i-type amorphous semiconductor layer, and an n-type amorphous semiconductor layer, wherein said i-type amorphous semiconductor layer of said power generating portion positioned on the side of light incidence comprises an amorphous silicon carbide film whose optical band gap Eg (eV) has the following relationship with the content of hydrogen C_H (at. %) and the content of carbon C_C (at. %) in the film:

$$Eg=a+bC_H/100+cC_C/100,$$

wherein a, b, and c are respectively in the ranges of $1.54 \leqq a \leqq 1.60$, $0.55 \leqq b \leqq 0.65$, and $-0.65 \leqq c \leqq -0.55$.

5,700,468

EXTRACTS OF GINKO BILOBA AND THEIR METHODS OF PREPARATION

Ezio Bombardelli; Giuseppe Mustich, and Marco Bertani, all of Milan, Italy, assignors to Indena SpA, Milan, Italy

Continuation of Ser. No. 445,916, May 22, 1995, Pat. No. 5,637,302, which is a continuation of Ser. No. 316,411, Jul. 26, 1994, abandoned, which is a continuation of Ser. No. 263,026, Jun. 20, 1994, abandoned, which is a continuation of Ser. No. 151,267, Nov. 12, 1993, abandoned, which is a continuation-in-part of Ser. No. 7,006, Jan. 21, 1993, abandoned, which is a continuation of Ser. No. 882,372, May 6, 1992, abandoned, which is a continuation of Ser. No. 769,106, Sep. 30, 1991, abandoned, which is a continuation of Ser. No. 408,235, Sep. 18, 1989, abandoned. This application Mar. 12, 1996, Ser. No. 615,536

Claims priority, application United Kingdom, Sep. 20, 1988, 8822004

Int. Cl.[6] A61K *47/16;47/00;* **C07K** *14/00*

U.S. Cl. 424—195.1 **2 Claims**

1. A composition comprising compounds extracted from leaves of *Ginkgo biloba* and wherein inactive lipophilic substances which can be extracted by n-hexane, n-heptane or a solvent comprising toluene and n-butanol wherein the volume ratio of toluene:butanol is from 6:1 to 12:1 are absent, said composition including the following components:

ginkgo flavone glucosides	24	wt %
proanthocyanidines	9	wt %
ginkgolides	3.6	wt %
bilobalide	3.1	wt %
sulphuric ash	0.1	wt %.

5,700,469

HIV-1 CORE PROTEIN FRAGMENTS

Andre James McMichael, Horton-cum-Studley; Douglas Fraser Nixon, Merton College; Alain Robert Michael Townsend, Oxford, and Frances Margaret Gotch, Wolvercote, all of England, assignors to Medical Research Council, London, England

Division of Ser. No. 854,629, Jul. 6, 1992, Pat. No. 5,480,967. This application Jun. 7, 1995, Ser. No. 474,008

Claims priority, application United Kingdom, Jan. 5, 1990, 9000287; Feb. 16, 1990, 9003577

Int. Cl.[6] A61K *39/21;39/12;* **G01N** *33/53;* **C07K** *5/00*

U.S. Cl. 424—208.1 **21 Claims**

1. A pharmaceutical composition, comprising:

(A) a pharmaceutically acceptable carrier; and

(B) a peptide selected from the group consisting of:

(1) a peptide having the amino acid sequence NH_2-valine-glutamine-asparagine-alanine-asparagine-proline-aspartic acid-cysteine-lysine-threonine-isoleucine-leucine-lysine-alanine-leucine-tyrosine COOH (SEQ ID NO:2);

(2) a peptide having the amino acid sequence NH_2-cysteine-glycine-serine-glutamic acid-glutamic acid-leucine-arginine-serine-leucine-tyrosine-asparagine-threonine-valine-alanine-threonine-COOH (SEQ ID NO:10);

(3) a peptide having the amino acid sequence NH_2 -leucine-arginine-proline-glycine-glycine-lysine-lysine-lysine-tyrosine-lysine-leucine-lysine-histidine-isoleucine-valine -COOH (SEQ ID NO:11);

(4) a peptide having the amino acid sequence NH_2 -cysteine-leucine-arginine-proline-glycine-glycine-lysine-lysine-lysine-tyrosine-lysine-leucine-lysine-histidine -isoleucine-valine-COOH (SEQ ID NO:4);

(5) a peptide having the amino acid sequence NH_2-phenylalanine-arginine-aspartic acid-tyrosine-valine-aspartic acid-arginine-phenylalanine-tyrosine-lysine-threonine -leucine-arginine-alanine-glutamic acid-cysteine-COOH (SEQ ID NO:5);

(6) a peptide having the amino acid sequence NH_2-leucine-glutamic acid-glutamic acid-methionine-methionine-threonine-alanine-cysteine-glutamine-glycine-valine-glycine-glycine-proline-glycine-tyrosine-COOH (SEQ ID NO:6);

(7) a peptide having the amino acid sequence NH_2-cysteine-valine-glycine -glycine-proline-glycine-histidine-lysine-alanine-arginine-valine-leucine-COOH (SEQ ID NO:7);

(8) a peptide having the amino acid sequence NH_2-aspartic acid-leucine -asparagine-threonine-methionine-leucine-asparagine-threonine-valine-glycine-glycine -histidine-glutamine-alanine-alanine-cysteine-COOH (SEQ ID NO:8); and

(9) a peptide having the amino acid sequence NH_2-valine-histidine-glutamine -alanine-isoleucine-serine-proline-arginine-threonine-leucine-asparagine-alanine-tryptophan-valine-lysine-cysteine-COOH (SEQ ID NO:9).

5,700,470

RECOMBINANT ADENOVIRUS WITH REMOVED EZA GENE AND METHOD OF PREPARATION

Izumu Saito; Yumi Kanegae, both of Tokyo, and Michio Nakai, Osaka, all of Japan, assignors to Sumitomo Pharmaceuticals Company, Limited, Osaka, Japan

Filed Mar. 12, 1996, Ser. No. 615,048

Claims priority, application Japan, Mar. 15, 1995, 7-084891; Sep. 29, 1995, 7-276335

Int. Cl.[6] A61K *39/23;39/12;* **C12N** *15/00;1/20*

U.S. Cl. 424—233.1 **31 Claims**

1. A recombinant adenovirus comprising an adenovirus genome having a foreign gene and a promoter for expressing said foreign gene, wherein the function of an E2A gene is completely deleted by removing a part or all of said E2A gene.

5,700,471

PRODUCTION OF FINE PARTICLE DYE OR DRUG PREPARATIONS

Lutz End, Mannheim; Dieter Horn, Heidelberg, and Erik Lueddecke, Mutterstadt, all of Germany, assignors to BASF Aktiengesellschaft, Ludwigshafen, Germany

Continuation of Ser. No. 298,304, Sep. 1, 1994, abandoned. This application Dec. 18, 1995, Ser. No. 573,876

Claims priority, application Germany, Sep. 1, 1993, 43 29 446.4

Int. Cl.[6] A61K *9/10;9/14;* **B01J** *13/00;* **C09B** *69/46*

U.S. Cl. 424—400 **4 Claims**

1. A process for producing fine-particle, essentially amorphous dye or drug preparations by converting a relatively coarse-particle aqueous dispersion or an organic solution in a solvent dissolving to an extent of at least 10% in water into a colloidal dispersion in water, wherein the aqueous dispersion or organic solution of the dye or drug is subjected to turbulent mixing at a temperature above the melting point of the dye or drug, where appropriate under pressure, with water or an aqueous protective colloid solution, and the resulting melt emulsion is immediately spray-dried or converted into a suspension by cooling.

5,700,472
OIL-IN-WATER EMULSIONS
Gerhard Frisch, Wehrheim, and Zoltan Damo, Eppstein, both of Germany, assignors to Hoechst Aktiengesellschaft, Germany
PCT No. PCT/EP93/03165, § 371 Date May 17, 1995, § 102(e) Date May 17, 1995, PCT Pub. No. WO94/10839, PCT Pub. Date May 26, 1994
PCT Filed Nov. 11, 1993, Ser. No. 436,246
Claims priority, application Germany, Nov. 18, 1992, 42 38 865.1
Int. Cl.⁶ A61K *9/107;* **A01N** *25/04*
U.S. Cl. 424—405 **18 Claims**

1. An oil-in-water emulsion comprising
0.001–70% by weight of at least one liquid active substance, said active substance being a phosphate or carbamate or mixture thereof;
from 0.001–20% by weight, of emulsifier consisting essentially of at least one salt of an aryl polyglycol ether phosphate of the formula I

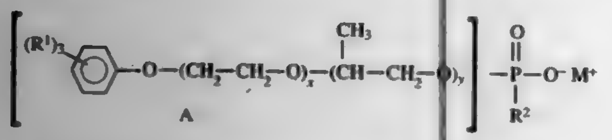

in which
each R^1, independently of the others, is an unsubstituted or substituted
C_1–C_{24}-alkyl, C_5–C_{15}-cycloalkyl, C_6–C_{24}-aryl or C_6–C_{24}-alkaryl group;
R^2 is hydrogen or is an unsubstituted or substituted —O—C_1–C_{24}-alkyl, —O—C_5–C_{15}-cycloalkyl, —O—C_6–C_{18}-aryl or A group, where A is the A group of said formula I,
M is an alkali metal ion, alkaline earth metal ion or ammonium ion of the formula $HN(R^3)_3$, where each R^3, independently of the others, is hydrogen or is an unsubstituted or substituted C_1–C_4-alkyl, C_5–C_{15}-cycloalkyl, C_6–C_{18}-aryl, or —$(CH_2)_z$—OH group, in which z is a number from 1 to 10;
x is a number from 0 to 80 and y is a number from 0 to 50, the sum of x and y not being zero, and sufficient water to provide an oil-in-water emulsion with an aqueous phase as the continuous phase.

5,700,473
TRIGLYCERIDE ENHANCED PYRETHRIN-BASED ARTHROPODICIDAL COMPOSITION
George S. Puritch, Saanichton; David S. Almond, Victoria, and Diana L. Parker, Brentwood, all of Canada, assignors to W. Neudorff GmbH KG, Emmerthal, Germany
Filed Aug. 24, 1995, Ser. No. 519,047
Int. Cl.⁶ A01N *65/00*
U.S. Cl. 424—405 **2 Claims**

1. A ready-to-use insecticidal composition, comprising:
approximately 20 to 4000 ppm of active pyrethrin substances selected from the group consisting of pyrethrin I and II, cinerin I and II, jasmolin I and II, and mixtures thereof;
approximately 1 to 5% by weight of a triglyceride component derived from vegetable seed oils selected from the group consisting of canola oil, cottonseed oil, soybean oil, sunflower oil, safflower oil, rape seed oil, peanut oil, olive oil, and mixtures thereof;
approximately 0.05 to 1.0% by weight of a nonionic surfactant selected from the group consisting of ethoxylated sorbitan derivatives, ethoxylated fatty acids, and mixtures thereof;
a gum component present at about 50 ppm to 0.1% by weight; and
a balance of water,
the composition being environmentally compatible and having little or no phytotoxicity.

5,700,474
BIRD AVERSION COMPOSITIONS
Marvin F. Preiser, Middletown, N.Y., and Peter F. Vogt, Loveland, Ohio, assignors to PMC Specialties Group Inc., Rocky River, Ohio
Continuation of Ser. No. 277,256, Jul. 20, 1994, abandoned, which is a continuation of Ser. No. 8,675, Jan. 25, 1993, abandoned. This application Sep. 19, 1996, Ser. No. 710,774
Int. Cl.⁶ A01N *25/02*
U.S. Cl. 424—405 **12 Claims**

1. A liquid bird aversion solution, comprising:
methyl anthranilate in an amount of from 15 to 50% by weight of the total weight of the solution;
d-limonene in an amount of from 10 to 50% by weight of the total weight of the solution; and
isopropyl myristate in an amount of from 10 to 50% by weight of the total weight of the solution,
wherein the liquid solution is lighter than water and forms a thin liquid film on a surface when applied to a source.

5,700,475
STABILIZED PESTICIDAL COMPOSITIONS AND THEIR USE
Brent D. Massman, St. Louis, and Maria L. Miller, Manchester, both of Mo., assignors to Monsanto Company, St. Louis, Mo.
Filed Dec. 29, 1995, Ser. No. 580,867
Int. Cl.⁶ A01N *25/28*
U.S. Cl. 424—408 **9 Claims**

1. A flowable composite comprising a) microcapsules having a mean diameter of less than 4 mm comprising a non-aqueous herbicidally active composition enclosed in an inert water-soluble wall material; and b) a non-aqueous herbicidal liquid in an amount sufficient to maintain the composite flowable; the non-aqueous herbicidally active composition and the non-aqueous herbicidal liquid being reactive with each other and the inert water-soluble wall material being insoluble in and impermeable to the herbicidally active composition and the non-aqueous herbicidal liquid.

5,700,476
HETEROMORPHIC SPONGES CONTAINING ACTIVE AGENTS
Arthur L. Rosenthal, Arlington, Tex.; Nicholas D. Light, Doune, and Carla A. Haynes, Cambuslang, both of United Kingdom, assignors to Johnson & Johnson Medical, Inc., Arlington, Tex.
Division of Ser. No. 35,013, Mar. 22, 1993, Pat. No. 5,466,462. This application Feb. 24, 1995, Ser. No. 393,963
Claims priority, application United Kingdom, Mar. 25, 1992, 9206509
Int. Cl.⁶ A61F *2/02;13/15;13/20;* **A61K** *47/42*
U.S. Cl. 424—426 **7 Claims**

1. A method of making a bioabsorbable heteromorphic sponge for use in promoting wound healing, the method comprising the steps of:
adding a pharmacologically active agent to one of a first biopolymer component or at least one second biopolymer component;
forming a heterogeneous premix comprising the first biopolymer component and the second biopolymer component dispersed in a liquid; and
freeze-drying the heterogeneous premix to form the heteromorphic sponge wherein said first biopolymer forms a matrix of sponge and said second biopolymer forms a macroscopic substructure within the matrix of the first biopolymer and wherein said matrix and said substructure provide for phased release of said pharmacologically active agent.

5,700,477
BIOABSORBABLE WOUND IMPLANT MATERIALS
Arthur L. Rosenthal, Arlington, Tex.; Nicholas D. Light, Doune, and Paul W. Watt, Broomridge, both of United Kingdom, assignors to Johnson & Johnson Medical, Inc., Arlington, Tex.
Division of Ser. No. 35,015, Mar. 22, 1993, abandoned. This application Apr. 4, 1995, Ser. No. 416,238
Claims priority, application United Kingdom, Mar. 25, 1992, 9206504
Int. Cl.⁶ A61F *2/02;13/15;13/20;* **A61K** *47/42*
U.S. Cl. 424—426 **20 Claims**

1. A method of preparing a bioabsorbable heteromorphic sponge comprising a matrix structure of sponge and at least one oriented, macroscopic, solid substructure, comprising the steps of:
providing a gel, paste, slurry or emulsion of a first bioabsorbable material and a solvent;
immersing the macroscopic solid substructure of a second bioabsorbable material in the gel, paste, slurry or emulsion;
orienting the substructure in the gel, paste, slurry or emulsion whereby the substructure is anisotropic; and
freeze-drying the gel, paste, slurry or emulsion, with the macroscopic substructure therein, to produce the bioabsorbable heteromorphic sponge;
whereby the resulting sponge comprises the matrix structure of sponge with the macroscopic substructure being embedded the, rein and being anisotropic, thereby defining a scaffolding having preferred directions for cellular and tissue ingrowth into the sponge.

5,700,478
WATER-SOLUBLE PRESSURE-SENSITIVE MUCOADHESIVE AND DEVICES PROVIDED THEREWITH FOR EMPLACEMENT IN A MUCOSA-LINED BODY CAVITY
James E. Biegajski, Foster City; Subbu S. Venkatraman, Palo Alto, and Ann M. Scott, Mountain View, all of Calif., assignors to Cygnus, Inc., Redwood City, Calif.
PCT No. PCT/US94/09305, § 371 Date Aug. 3, 1995, § 102(e) Date Aug. 3, 1995, PCT Pub. No. WO95/05416, PCT Pub. Date Feb. 23, 1995
PCT Filed Aug. 19, 1994, Ser. No. 505,185
Int. Cl.⁶ A61F *6/06;9/02;* **A61K** *9/70;47/30*
U.S. Cl. 424—434 **45 Claims**

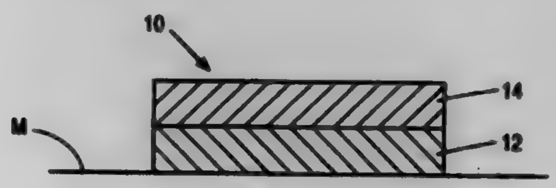

1. A water-soluble pressure-sensitive adhesive comprising a water-soluble polymer and a water-soluble plasticizer, said polymer having a T(g) or a T(m) greater than about 25° C. and having a hydrophilicity greater than about 25%, said plasticizer being miscible with said polymer at room temperature and being liquid at room temperature and having a boiling point higher than 80° C.

5,700,479
SURGICAL ELEMENT AND METHOD FOR SELECTIVE TISSUE REGENERATION
Dan Lundgren, Hovas, Sweden, assignor to Guidor AB, Huddinge, Sweden
Continuation of Ser. No. 926,604, Aug. 5, 1992, abandoned, which is a continuation-in-part of Ser. No. 689,236, Jun. 18, 1991, abandoned. This application Nov. 10, 1994, Ser. No. 337,651
Claims priority, application Sweden, Dec. 23, 1988, 88/04641
Int. Cl.⁶ A61K *6/00;* **A61C** *13/00*
U.S. Cl. 424—435 **26 Claims**

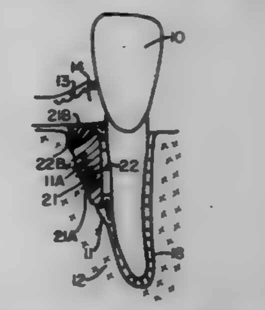

1. An article adapted for selectively-guided tissue regeneration in the treatment of a periodontal defect adjacent to the root of a tooth, said article comprising
(a) an element comprising a first sheet portion and a second sheet portion, said first portion having a first surface adapted to face towards said root, and having an outer surface, said first portion being adapted to be disposed adjacent said root at the site of said defect, said first portion having a coronal end and an apical end;
(b) said second portion having an inner surface and an outer surface, said inner surface being opposite and essentially parallel to said outer surface of said first portion;
(c) at least one of said portions comprising a plurality of perforations;
(d) said element further comprising first spacing means located between said outer surface of said first portion and said inner surface of said second portion, said first spacing means being adapted to maintain said first portion and said second portion in essentially parallel relationship, thereby creating a first space, said first space being adapted to permit ingrowth of new connective tissue thereinto through said perforations; and
(e) said element further comprising second spacing means, said second spacing means being adapted to create and maintain a second space between said root and said first surface, said second space having sufficient width perpendicular to the longitudinal axis of said root to permit ingrowth into said second space of periodontal ligament tissue.

5,700,480
TRANSDERMAL THERAPEUTIC SYSTEM COMPRISING GALANTHAMINE AS ACTIVE COMPONENT
Thomas Hille, Neuwied, and Lothar Deurer, Koblenz, both of Germany, assignors to LTS Lohman Therapie-Systeme GmbH & Co. KG, Neuwied, Germany
PCT No. PCT/EP94/00054, § 371 Date Sep. 29, 1995, § 102(e) Date Sep. 29, 1995, PCT Pub. No. WO94/16707, PCT Pub. Date Aug. 4, 1994
PCT Filed Jan. 10, 1994, Ser. No. 495,609
Claims priority, application Germany, Jan. 23, 1993, P 43 01 783.5
Int. Cl.⁶ A61F *13/02;* **A61L** *15/16;* **A61K** *9/14*
U.S. Cl. 424—448 **9 Claims**

1. A transdermal therapeutic system (TTS) for the administration of galanthamine to the skin said system having a backing layer which is impermeable to active substances and a pressure sensitive adhesive reservoir layer, characterized in that the reservoir layer comprises 40–80%-wt. polymer material selected from the group consisting of polyacrylates, 0.1–30% wt. plasticizers, and

0.1–30%-wt. galanthamine base or one of the pharmaceutically acceptable salts thereof.

5,700,481
TRANSDERMAL DRUG DELIVERY PROCESS
Katsumi Iga, Suita; Shigeo Yanai, Himeji; Keiichiro Okabe, Komae, and Masaki Itoh, Yokohama, all of Japan, assignors to Takeda Chemical Industries, Ltd., Osaka; Advance Co., Ltd., and Teikoku Hormone Mfg. Co., Ltd., both of Tokyo, all of Japan
Filed Mar. 12, 1996, Ser. No. 614,376
Claims priority, application Japan, Mar. 17, 1995, 7-086290
Int. Cl.⁶ A61F *13/00;* **A61N** *1/30*
U.S. Cl. 424—449 **26 Claims**

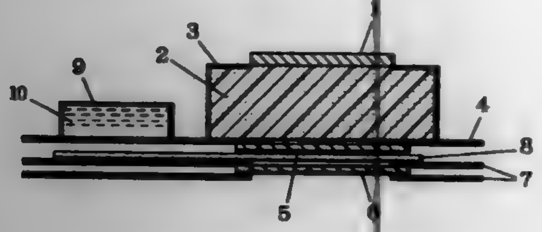

1. A transdermal drug delivery process by iontophoresis for a calcitonin, its derivative having similar function or activity to the calcitonin or a salt thereof, which comprises the step of applying a substantially constant voltage within the range of 3 to 20 V at a current density of 0.05 to 0.5 mA/cm^2, wherein the process comprises:
(1) at least one cycle comprising:
(1a) a precedent voltage application step of applying a substantially constant voltage for 1 to 30 minutes, and
(1b) a succeeding voltage application step of applying a substantially constant voltage, which voltage is lower than the applied voltage of the precedent voltage application step (1a), for 15 to 100 minutes, or
(2) at least one cycle comprising;
(2a) a voltage application step of applying a substantially constant voltage in the range of 4 to 15 V for 1 to 30 minutes
(2b) a step of interrupting the voltage application for 1 to 30 minutes, and
(2c) a voltage application step of applying a substantially constant voltage, which voltage is substantially the same as the applied voltage of the voltage application step (2a) and in the range of 4 to 15 V, for 1 to 30 minutes.
where the current density in the voltage application steps (2a) and (2c) is maintained at 0.08 to 0.3 mA/cm^2.

5,700,482
PROCESS FOR THE PREPARATION OF A LIPOSOME DISPERSION UNDER ELEVATED PRESSURE CONTENTS
Lene Frederiksen; Klaus Anton, both of Basel, and Peter van Hoogevest, Riehen, all of Switzerland, assignors to Ciba-Geigy Corporation, Summit, N.J.
Continuation of Ser. No. 216,760, Mar. 23, 1994, abandoned. This application Jun. 7, 1995, Ser. No. 483,912
Claims priority, application Switzerland, Mar. 24, 1993, 891/93
Int. Cl.⁶ A61K *9/127*
U.S. Cl. 424—450 **14 Claims**

1. A process for the preparation of a liposome dispersion comprising

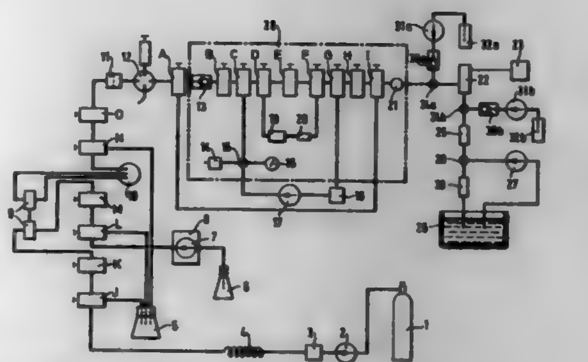

subjecting at least one phospholipid of the formula

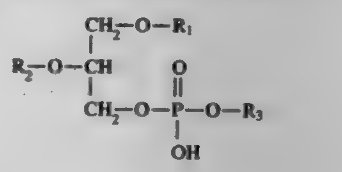

wherein
R_1 is C_{10-20}acyl,
R_2 is hydrogen or C_{10-20}acyl, and
R_3 is hydrogen, 2-trimethylamino-1-ethyl, 2-amino-1-ethyl, C_{1-4}alkyl, C_{1-5}alkyl substituted by carboxy, C_{2-5}alkyl substituted by hydroxy, C_{2-5}alkyl substituted by carboxy and by hydroxy, or C_{2-5}alkyl substituted by carboxy and by amino, or a salt of such phospholipid to a mobile carrier phase consisting of carbon dioxide and a polar organic solvent under pressure and temperature conditions which are higher than the critical pressure and the critical temperature of a pure carbon dioxide phase, reducing the compressed mixed phase that is obtainable to normal pressure and transferring it to an aqueous phase comprising water in the purity required for the intended application and a non-proteinaceous substance or a mixture of non-proteinaceous substances having water-soluble or hydrophilic properties for encapsulation in liposomes and removing the organic solvent and/or separating off a fraction of liposomes having a desired diameter range and/or converting the liposome dispersion into a form suitable for the intended application.

5,700,483
RETINOIC ACID-CONTAINING COMPOSITIONS
John W. Quigley, Jr., Foster City, and Harris Goodman, San Francisco, both of Calif., assignors to Penederm, Inc., Foster City, Calif.
Continuation of Ser. No. 875,772, Apr. 29, 1992. This application Sep. 6, 1996, Ser. No. 708,181
The portion of the term of this patent subsequent to Apr. 29, 2012, has been disclaimed.
Int. Cl.⁶ A61K *31/785;9/10*
U.S. Cl. 424—486 **22 Claims**

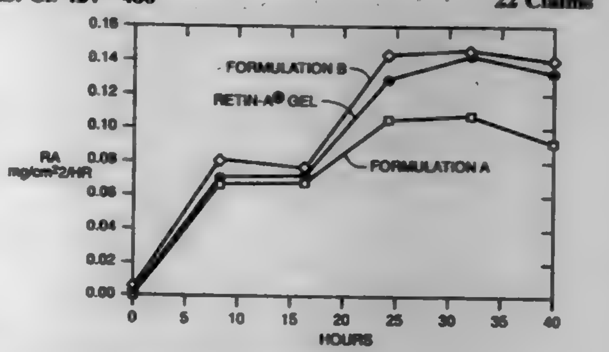

1. A topical composition comprising:

(a) retinoic acid in an amount effective to treat acne vulgaris or the effects of senile keratosis or photoageing of the skin;
(b) an urethane compound in an amount of about one percent by weight to about twenty percent by weight, wherein said urethane compound exhibits a molecular weight up to about 200,000, is prepared by reacting approximately two moles of a hydroxy-terminated linear alkylene or polyalkylene glycol or polyether with approximately one mole of a monomeric organic diisocyanate, and is sufficient to permit the topical composition to exhibit reduced skin irritation but undiminished effectiveness as compared to a composition otherwise identical except for the absence of the urethane compound; and
(c) a topical carrier in an amount sufficient to provide said topical composition in the form of a liquid, a cream or a gel.

5,700,484
SUSTAINED RELEASE MICROPARTICULATE CAFFEINE FORMULATION
Francoise Chauffard, Vevey; Mark Y. A. Ensien, Yverdon, and Pierre Tachon, Cugy, all of Switzerland, assignors to Nestec S.A., Vevey, Switzerland
Division of Ser. No. 357,689, Dec. 16, 1994. This application Aug. 16, 1996, Ser. No. 698,621
Int. Cl.⁶ A61K *9/16;9/54;9/58;9/60*
U.S. Cl. 424—496 **16 Claims**

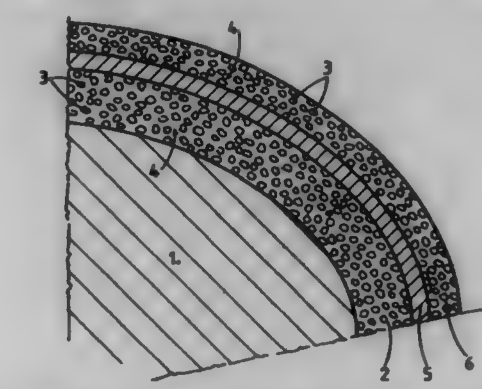

1. A method for increasing the alertness of a subject which comprises orally administering to a subject a single dose of a composition in the form of microparticles comprising:
a stimulant comprised of xanthine or a xanthine derivative;
substantially spherical solid cores of pharmaceutically acceptable organic material having:
a) a first layer substantially surrounding the core which comprises a biodegradable matrix of a water soluble binding agent, a water insoluble release retarding agent, and between about 55–95% by weight of the total amount of the stimulant present in the particle, wherein:
i) the binding agent binds the stimulant to the microparticle;
ii) the release retarding agent retards the release of the stimulant from the matrix; and
iii) the stimulant is uniformly distributed in the matrix;
b) a second layer substantially surrounding the first layer for further delaying the release of the stimulant from the first layer; and
c) a third layer substantially surrounding the second layer which comprises a biodegradable matrix of a water soluble binding agent, a water insoluble release retarding agent and between about 5–45% by weight of the total amount of the stimulant present in the particle, wherein:
i) the binding agent binds the stimulant to the microparticle;
ii) the release retarding agent retards the release of the stimulant from the matrix; and
iii) the stimulant is uniformly distributed in the matrix,
and further wherein:
A) at least about 20–50% by weight of the total amount of the stimulant present in the composition is released within about 2 hours after administration: and
B) the balance of the stimulant is released within about 8–10 hours after administration.

5,700,485
PROLONGED NERVE BLOCKADE BY THE COMBINATION OF LOCAL ANESTHETIC AND GLUCOCORTICOID
Charles B. Berde, Brookline, and Robert S. Langer, Newton, both of Mass., assignors to Children's Medical Center Corporation, Boston, Mass.
Continuation-in-part of Ser. No. 119,958, Sep. 10, 1993, which is a continuation-in-part of Ser. No. 943,287, Sep. 10, 1992, abandoned. This application May 1, 1995, Ser. No. 432,402
Int. Cl.⁶ A61K *9/16*
U.S. Cl. 424—501 **21 Claims**

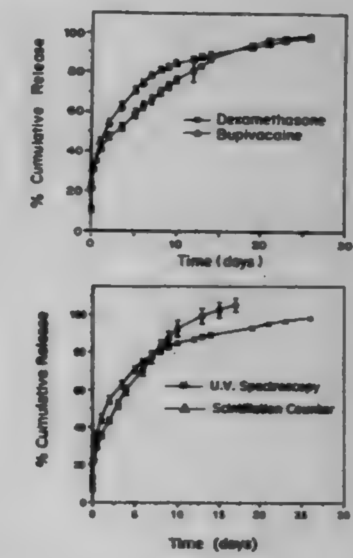

1. A method for providing sustained local numbness or pain relief at a site in a patient comprising
administering at a site in a patient a local anesthetic incorporated into a device consisting essentially of a biocompatible, biodegradable polymer, wherein the local anesthetic is present in a concentration effective to achieve local numbness or pain relief at the site, and an amount of a glucocorticoid effective to prolong the local numbness or pain relief at the site.

5,700,486
PHARMACEUTICAL COMPOSITIONS IN THE FORM OF PARTICLES SUITABLE FOR THE CONTROLLED RELEASE OF PHARMACOLOGICALLY ACTIVE SUBSTANCES AND PROCESS FOR PREPARING THE SAME COMPOSITIONS
Tiziana Canal; Mara Lucia Lovrecich, and Fabio Carli, all of Trieste, Italy, assignors to Vectorpharma International S.p.A., Trieste, Italy
Division of Ser. No. 139,051, Oct. 21, 1993, Pat. No. 5,536,508, which is a continuation of Ser. No. 794,905, Nov. 20, 1991, abandoned. This application Apr. 30, 1996, Ser. No. 641,039
Claims priority, application Italy, Nov. 22, 1990, 22155
Int. Cl.⁶ A61K *9/50;47/32;* **A61F** *2/02;* **B01J** *13/02*
U.S. Cl. 424—501 **20 Claims**

1. Process for the preparation of pharmaceutical compositions in the form of particles suitable for the controlled release of a pharmaceutically active substance comprising a biodegradable polymer, an amphiphilic polymer, an agent modifying the interface

properties at a concentration between 0.1 and 99.9% and a pharmaceutically active substance at a concentration between 0.01 and 99.9% wherein:

(a) the biodegradable polymer and amphiphilic polymer and the agent modifying the interface properties are co-solubilized in the presence or absence of solvents to form a mixture;
(b) the pharmaceutically active substance is dissolved or dispersed in the mixture;
(c) the obtained mixture is brought in the from of particles having diameter comprised between 0.1 and 150 μm by means of emulsifying or extruding or spray-drying or spray-congealing techniques;
(d) said particles are optionally washed and dried according to classical methods.

5,700,487
TREATMENT OF PULMONARY INFLAMMATION
Nicholas Gerber, Worthington; Glen Apseloff, and Daniel I. Mullet, both of Columbus, all of Ohio, assignors to The Ohio State University, Columbus, Ohio
Filed Mar. 4, 1996, Ser. No. 610,271
Int. Cl.[6] A61K *33/24;31/28*
U.S. Cl. 424—650 **7 Claims**

1. A method of treating pulmonary inflammation in mammals, comprising administering an effective amount of a pharmaceutically acceptable gallium compound selected from the group consisting of gallium nitrate, gallium citrate, gallium chloride, gallium carbonate, gallium acetate, gallium tartrate, gallium oxalate, gallium oxide, gallium arsenide, and hydrated gallium oxide.

5,700,488
GAUGE BAND RANDOMIZER
Robert E. Cree, Newark, N.Y., and Ricardo P. Rodriguez, Mississauga, Canada, assignors to Addex Design, Inc., Newark, N.Y., a part interest
Continuation of Ser. No. 282,425, Jul. 28, 1994, Pat. No. 5,567,445, which is a continuation of Ser. No. 831,499, Feb. 5, 1992, Pat. No. 5,360,328. This application Jun. 7, 1995, Ser. No. 476,891
Int. Cl.[6] B29C *53/10*
U.S. Cl. 425—72.1 **11 Claims**

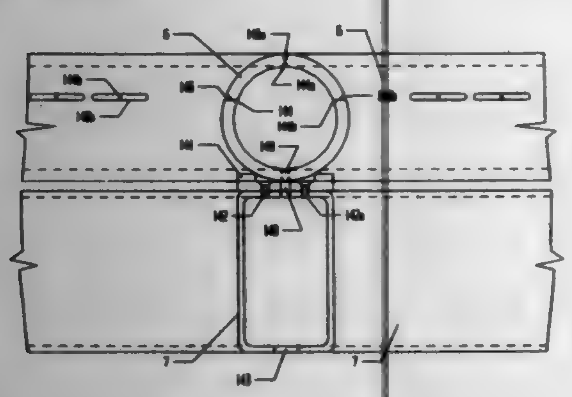

1. A turning bar assembly for an oscillatory hauloff of a blown film line wherein an assembly of idler rolls and turning bars rotatably shift their relationship to one another over time in a predetermined manner to enable the film to have gauge variations distributed back and forth across the width of the film, the turning bar assembly including a turning bar and a backing bar, said backing bar engaging the outside surface of said turning bar at locations along the length of the turning bar, said backing bar being constructed and arranged to reinforce said turning bar against deflection under tension applied by the film to the turning bar.

5,700,489
BUBBLE STABILIZER AND SIZING CAGE WITH WEAR STRIPS
Earl T. Pottorff, Savannah, N.Y., assignor to Pearl Technologies, Inc., Savannah, N.Y.
Filed May 28, 1996, Ser. No. 653,791
Int. Cl.[6] B29C *47/90*
U.S. Cl. 425—72.1 **14 Claims**

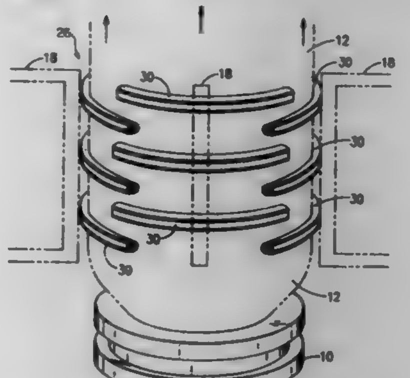

1. In an external stabilizer arrangement of the type employed in a plastic film blowing apparatus in which a tubular die means, fed with a supply of molten thermoplastic polymer, extrudes a tube of the molten polymer and which injects air into said extruded tube to inflate the tube and expand the wall of the tube into a film of a desired thickness; and wherein means positioned above said die means draw the tube vertically upward along a vertical axis and collapse and flatten the film; the external stabilizer arrangement being positioned on frame means surrounding the extruded tube above said die means to keep the tube aligned on a predetermined path as the tube is drawn upwards; comprising the improvement wherein said stabilizer arrangement includes at least one extrusion of a light-weight material curved in a circumferential direction about said vertical axis, and having a profile that is rounded on a side that faces the extruded tube so that said extrusion has a rounded front surface; and a wear resistant material disposed non-rotatably on said rounded front surface of said extrusion.

5,700,490
APPARATUS AND METHOD FOR THE THERMAL TREATMENT OF FIBERS
Hansjorg Meise, Cologne, Germany, assignor to Barmag AG, Remscheid, Germany
Filed Sep. 28, 1995, Ser. No. 534,950
Claims priority, application Germany, Sep. 30, 1994, 44 35 152.6; Mar. 17, 1995, 195 09 842.0; Apr. 3, 1995, 195 12 433.2
Int. Cl.[6] B29C *47/88*
U.S. Cl. 425—72.2 **23 Claims**

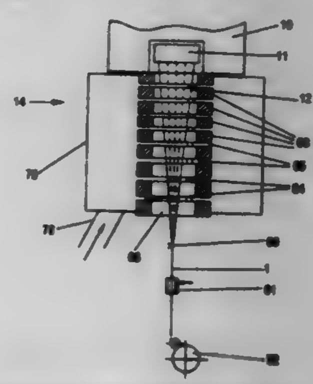

1. A cooling tube for cooling synthetic filaments as they advance downwardly from a spinneret of a melt spinning machine, comprising

a generally tubular wall which defines a central axis and along which the synthetic filaments are adapted to advance in an axial direction, with said wall comprising a plurality of superposed annular elements which coaxially overlie each other in a spaced apart arrangement and so as to define an annular gas channel between each adjacent pair of annular elements.

5,700,491
MELT LINE FOR SPIN BEAM
Felix Herwegh, Haltern; Nils Holger Weide, and Wolfgang Schumann, both of Wuppertal, all of Germany, assignors to Barmag AG, Remscheid, Germany
Filed Nov. 22, 1995, Ser. No. 562,116
Claims priority, application Germany, Nov. 23, 1994, P 44 41 744.6; Mar. 17, 1995, 195 09 841.2
Int. Cl.[6] D01D *4/06*
U.S. Cl. 425—72.2 **12 Claims**

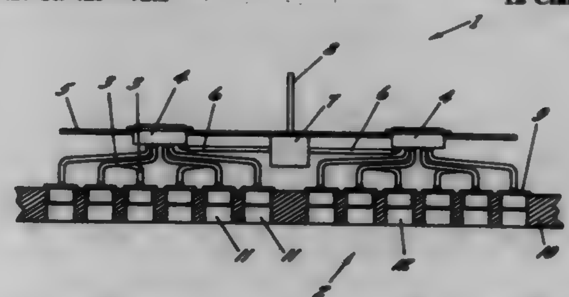

1. A melt line for advancing a molten plastic in a spin beam which includes a delivery member and an outlet member positioned below the delivery member, and comprising;

an upper line segment which is downwardly inclined,
a lower line segment which is downwardly inclined, and
an elbow interconnecting the upper and lower line segments, with the elbow being substantially helical so as to be downwardly inclined along the entire length of the elbow, and With the upper and lower line segments extending in different directions which are each substantially tangent to the helix of the elbow.

5,700,492
ROTARY-TYPE TABLETTING MACHINE WITH LUBRICANT SPRAYING MEANS
Kiyoshi Morimoto; Yasushi Watanabe; Yoshika Sanada; Teiichi Miwa, and Tomoaki Masada, all of Shizuoka, Japan, assignors to Kyowa Hakko Kogyo Co., Ltd., Tokyo, Japan
Filed Oct. 31, 1994, Ser. No. 332,533
Claims priority, application Japan, Nov. 1, 1993, 5-273304
Int. Cl.[6] B28B *21/00*
U.S. Cl. 425—100 **3 Claims**

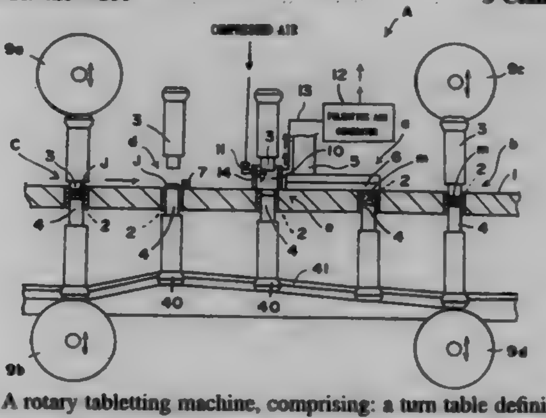

1. A rotary tabletting machine, comprising: a turn table defining a plurality of rotation positions, said turn table having a plurality of penetrated holes each comprising a die provided at fixed intervals in a ring arrangement; each die, provided with a pair of punches, each pair of punches situated above and below its respective die, each pair of punches being rotated together with the turn table and adapted to execute a piston operation so that tablets are continuously produced by compressing pharmaceutical material filled in each die associated with each pair of punches executing the piston operation;

a spraying chamber with an upper open end for inserting an upper punch of any one of each pair of punches and enclosing each die associated with said upper punch of each pair of punches when said turn table moves to a rotation position which is after a rotation position where a compressed tablet is discharged and before a rotation position where pharmaceutical material is filled in each die associated with said upper punch of each pair of punches;
lubricant spraying means connected with said spraying chamber for spraying lubricant in said spraying chamber, said lubricant spraying means continuously supplying lubricant in said spraying chamber; and
pulsating air vibration generating means connected with said spraying chamber, for feeding compressed air to said spraying chamber for diffusing the lubricant sprayed in said spraying chamber, said pulsating air vibration generating means supplying oscillating energy of low frequency which is enough to periodically change the pressure in said spraying chamber so as to disperse the lubricant sprayed in said spraying chamber to attach the lubricant uniformly to each die and each associated pair of punches.

5,700,493
MOLD FOR MAKING COMPOSITE TUBE COUPLINGS
Christopher Scarazzo, Twinsburg, and Lawrence N. Mears, Solon, both of Ohio, assignors to OEM/Miller Corporation, Aurora, Ohio
Division of Ser. No. 394,393, Feb. 24, 1995. This application Mar. 8, 1996, Ser. No. 614,818
Int. Cl.[6] B29C *45/14*
U.S. Cl. 425—116 **6 Claims**

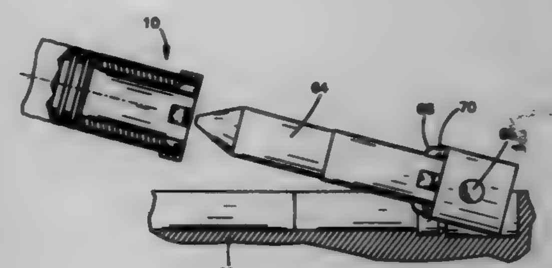

4. A mold for forming an end coupling on a composite tube having generally cylindrical end portions comprising:

a) a base die section including inner coupling contour delineating surfaces;
b) a mating die section including further inner coupling contour delineating surfaces such that the contour delineating surfaces together delineate the external configuration of each coupling to be formed;
c) a core pin moveably connected to one of the die sections, the core pin and said one die section being relatively moveable between a tube receipt position and a coupling molding position; and,
d) the core pin including a plurality of circumferentially spaced fingers, the fingers each being of stepped cross sectional configuration having longitudinally disposed surfaces for spaced concentric location of a tube end portion with respect to the core pin, the fingers also each having a generally radially disposed shoulder for engagement with tube ends and axial location of end portions relative to the core pin.

5,700,494

DEVICE FOR PRODUCING A SHAPED CONFECTION OF EDIBLE MATERIALS COMBINED INTO CO-EXTENSIVE STRIPS

Robert Masse, St-Luc; Alain Dion, Marieville; Robert Bessette, St-Jean, and Khiem Tran, Montreal, all of Canada, assignors to 9000-9226 Quebec Inc., Canada

Continuation of Ser. No. 329,612, Oct. 26, 1994, abandoned, which is a continuation of Ser. No. 51,015, Apr. 22, 1993, abandoned, which is a continuation-in-part of Ser. No. 981,334, Nov. 25, 1992, abandoned. This application Jan. 17, 1996, Ser. No. 587,982

Int. Cl.[6] A23G *9/28;9/24;9/30;* **B29C** *27/04*

U.S. Cl. 425—131.1 **8 Claims**

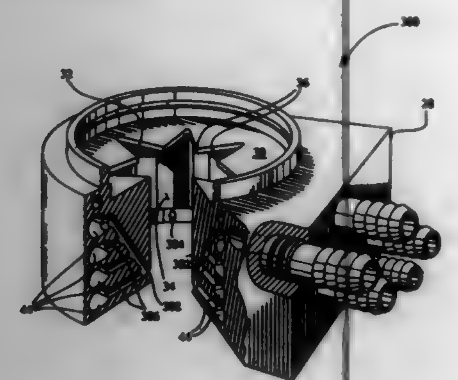

1. A device for combining plastic edible materials into a striped continuous formed confection having a predetermined cross-sectional shape, said device comprising:

a body defining a pathway for receiving therethrough a substrate of said striped continuous formed confection comprising an extrudate of host edible material, said body including;

a) a plurality of nozzles for selectively discharging at least one of a plurality of different supplemental edible materials in said pathway, said plurality of nozzles being in a spaced apart relationship for laying supplemental edible material in a plurality of seams spaced apart from one another on the host edible material, thereby forming a confection of different edible materials combined in co-extensive strips;

b) a plurality of feed conduits supplied with respective supplemental edible materials, said feed conduits being in fluid-communication with said nozzles for supplying to said nozzles supplemental edible materials;

c) said plurality of nozzles communicating with said pathway through discharge orifices, whereby each of said discharge orifices is capable of laying on the host edible material different supplemental materials substantially without mixing the host edible material and the supplemental edible material;

d) a washing medium supply conduit in fluid-communication with said plurality of nozzles for delivering in said nozzles a washing medium to clean said nozzles from residual supplemental edible material; and

e) each nozzle including an elongated passageway, the washing medium having a direction of flow through said passageway, said feed conduits having discharge ports opening in each nozzle at a location downstream of a discharge port of said supply conduit of said washing medium relative to said direction of flow.

5,700,495

CONTINUOUS 3-D FORMING MACHINE FOR FORMING THREE-DIMENSIONAL PRODUCTS FROM THERMOPLASTIC MATERIALS

W. James Kemerer, Mission Viejo, and Clyde W. Vassar, deceased, late of Carlsbad, both of Calif., by Jean F. Vassar, administrator, assignors to Kemcast Partners-1989, Mission Viejo, Calif.

Division of Ser. No. 167,197, Dec. 13, 1993, Pat. No. 5,505,599, which is a continuation-in-part of Ser. No. 72,490, Jun. 4, 1993, Pat. No. 5,330,341, which is a division of Ser. No. 843,362, Feb. 25, 1992, Pat. No. 5,244,618, which is a division of Ser. No. 506,072, Apr. 6, 1990, Pat. No. 5,167,781. This application Apr. 5, 1996, Ser. No. 628,810

Int. Cl.[6] B29C *43/48*

U.S. Cl. 425—190 **13 Claims**

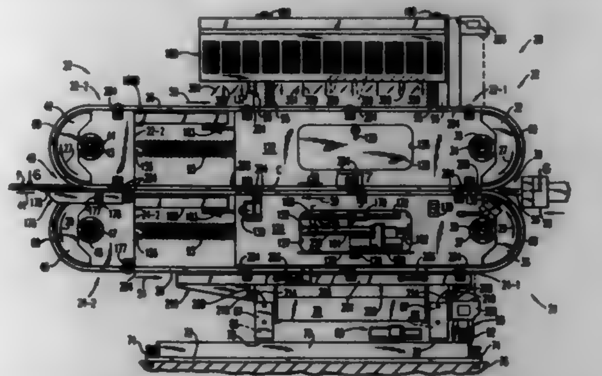

1. A continuous 3-D forming machine for forming three-dimensional products from thermoplastic material having upper and lower carriages defining an entry and an exit located at opposite ends of the machine and having two upper and two lower cylindrical, drum-shaped pulleys rotatably mounted respectively at entry and exit ends of the upper carriage and at entry and exit ends of the lower carriage and having upper and lower endless, flexible, mold belts removably mountable on and revolvable respectively around the upper and lower carriages and having drive means for revolving the upper and lower mold belts respectively around the upper and lower carriages with said upper and lower mold belts being juxtaposable along a pass line between said carriages for defining at least one travelling mold channel continuously moving from said entry to said exit for continuous three-dimensional forming of heated thermoplastic material introduced into said entry with resultant 3-D formed products proceeding out from said exit, said machine, wherein:

an exit end portion of the upper carriage is extendable and retractable in a direction toward and away from a main portion of the upper carriage, said direction of extension and retraction being parallel with the pass line;

said exit end portion of the upper carriage has said upper exit pulley rotatably mounted thereon;

an exit end portion of the lower carriage is extendable and retractable in a direction toward and away from a main portion of the lower carriage, said direction of extension and retraction being parallel with the pass line;

said exit end portion of the lower carriage has said lower exit pulley rotatably mounted thereon;

said machine includes removable upper and lower spanning bridges;

said upper spanning bridge is insertable between said exit end portion of the upper carriage in an extended position and said main portion of the upper carriage;

said upper spanning bridge in its inserted position is located in alignment with a top area of said exit end portion and a top area of said main portion of the upper carriage for supporting the revolving upper mold belt in its return travel from the top area of said extended exit end portion to the top area of said main portion of the upper carriage;

said lower spanning bridge is insertable between said exit end portion of the lower carriage in an extended position and said main portion of the lower carriage; and

said lower spanning bridge in its inserted position is located in alignment with a top area of said exit end portion and a top area of said main portion of the lower carriage for supporting the revolving lower mold belt in its travel along the pass line from the top area of said main portion to the top area of said extended exit end portion of the lower carriage.

5,700,496

SELF-ADJUSTING MOLD BACKPLATE

Charles R. Bacon, 5718 N. Shore Dr., Clarklake, Mich. 49234

Filed Nov. 15, 1994, Ser. No. 339,556

Int. Cl.[6] B28B *21/82;* **B29C** *33/20*

U.S. Cl. 425—193 **9 Claims**

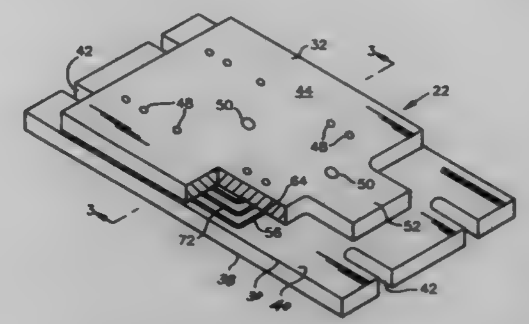

1. A self-adjusting mold backplate assembly for molding dies adapted to be mounted upon a molding machine platen comprising, in combination, a first plate of planar configuration having an outer surface and a flat inner surface, first mounting means defined on said first plate for attaching said first plate to a mold machine platen with said outer surface disposed toward the machine platen, a second plate of planar configuration having an inner surface and a flat outer surface, second mounting means defined on said first plate for mounting said second plate upon said first plate with said second plate outer surface disposed toward said first plate inner surface and spaced therefrom, third mounting means defined on said second plate for mounting a molding die disposed toward said second plate inner surface, and a resilient elastomeric cushion located between and compressed between said first plate inner surface and said second plate outer surface maintaining the spacing between said first and second plates and permitting limited self-adjustment of the spacing therebetween, said first plate inner surface and said second plate outer surface each having substantially equal spaced opposed cushioned areas, said area of said second plate substantially comprising the entire flat configuration of said second plate, said resilient elastic cushion being located over substantially all of said areas, said cushion comprising a plurality of spaced resilient longitudinal segments spaced over said area.

5,700,497

VIBRATORY AGGLOMERATOR

Lawrence H. Stone, Rivervale; William J. Zhao, Livingston, and Hossein Alamzad, Weehawken, all of N.J., assignors to Kason Corporation, Millburn, N.J.

Filed Jun. 12, 1995, Ser. No. 489,449

Int. Cl.[6] B29C *67/02*

U.S. Cl. 425—222 **6 Claims**

1. An agglomerator for use in a vibration imparting structure, comprising a top cone having an apex and in an apex-up orientation, means for providing input of material to be agglomerated to said agglomerator, arranged above the apex of said cone, an inverted cone located below said top cone and defining at approximately its center an opening for the output of agglomerated par-

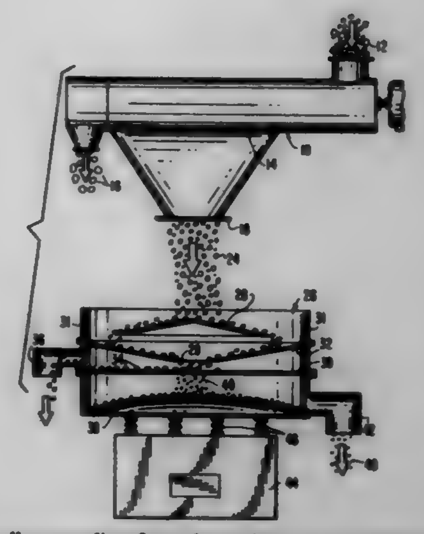

ticles, a wall upstanding from the periphery of said inverted cone, and means for vibrating said top cone and said inverted cone.

5,700,498

MOLDING APPARATUS

Bernard Renao; Michel Robinault, both of Nantes, and Didier Urbain, Saint Gemmes d'Aubigne, all of France, assignors to Draftex Industries Limited, Edinburgh, Scotland

Filed Sep. 18, 1995, Ser. No. 529,423

Claims priority, application United Kingdom, Oct. 3, 1994, 9419916

Int. Cl.[6] B29C *49/04*

U.S. Cl. 425—532 **24 Claims**

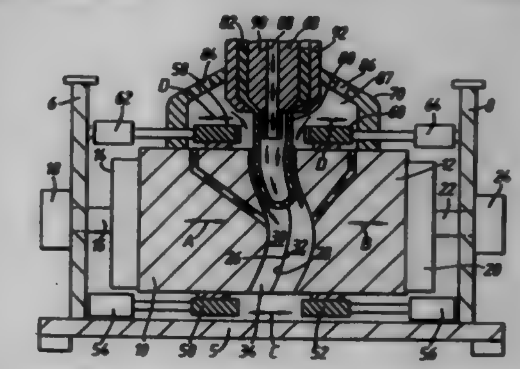

1. Molding apparatus for blow-molding an article curved in three dimensions, comprising

two mold parts mounted to be movable relative to each other between a first, mutually separated, position and a second, closed, position in which the two mold parts together define a mold cavity curved in three dimensions to match the shape of the article,

the mold cavity having first and second longitudinally spaced ends at least one of which is open,

extrusion means for extruding a parison of synthetic resin material into the cavity through said one end thereof, the extrusion means comprising means adjacent said open end of the mold cavity for extruding the parison into the mold cavity,

closure means movable independently of movement of the mold parts for closing said at least one end of the mold cavity when the parison is in position in the mold cavity,

blow-molding means for blow-molding the parison in the cavity to form the said article,

cover means defining an enclosure around the extrusion means and said one end of the mold cavity, and

flow means comprising means for supplying a flow of air into the enclosure and thence into the mold cavity through said open end thereof and as the parison passes into the mold cavity, the flow of air flowing between the outside of the parison and the wall of the mold cavity and flowing towards

the other end of the cavity whereby to facilitate the passage of the parison into the mold cavity.

5,700,499
VALVE MEMBER LOCATING INSERT FOR INJECTION MOLDING NOZZLE
Klaus Bauer, Neuendettelsau, Germany, assignor to Mold-Masters Limited, Georgetown, Canada
Filed Aug. 28, 1995, Ser. No. 520,161
Claims priority, application Canada, Jun. 30, 1995, 2153079
Int. Cl.⁶ B29C *45/23*
U.S. Cl. 425—564 **3 Claims**

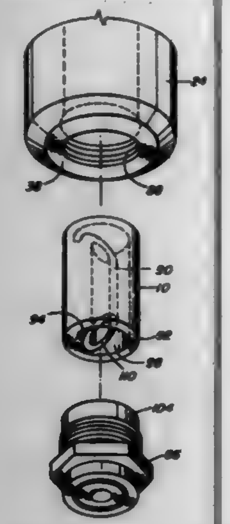

1. In an injection molding valve member locating insert to be mounted in a nozzle with an elongated valve member reciprocating in a melt bore extending through the nozzle, the locating insert having an inner cylindrical valve member receiving collar portion and an outer cylindrical mounting collar portion extending concentrically around the inner receiving collar portion with a melt flow space extending therebetween, the inner receiving collar portion having a central opening to receive the valve member therethrough to accurately locate the valve member in the melt bore, the outer collar portion to fit in a seat in the front end of the nozzle to be secured in place with the melt flow space extending between the inner receiving collar portion and the outer mounting collar portion in alignment with the melt bore of the nozzle, having the improvement comprising;

the locating insert having only a single connecting vane portion extending radially between the inner receiving collar portion and the outer mounting collar portion to retain the inner receiving collar portion in place in the melt bore, the single connecting vane portion and the inner receiving collar portion having an upstream end which extends in a direction diagonally downwardly and inwardly away from the outer mounting collar portion and a downstream end which extends in a direction diagonally downwardly and outwardly towards the outer mounting collar portion.

5,700,500
TWO-STAGE INJECTION-MOLDING MACHINE
Henning Wilhelm, Lehrte/OT. Aligse, Germany, assignor to Polygram International Holding B.V., Baarn, Netherlands
Filed Jun. 3, 1996, Ser. No. 656,744
Claims priority, application Germany, Jun. 8, 1995, 195 20 931.1
Int. Cl.⁶ B29C *45/22*
U.S. Cl. 425—572 **4 Claims**

1. A two-stage injection molding machine comprising:
a fixed mold plate;
a movable mold plate; and

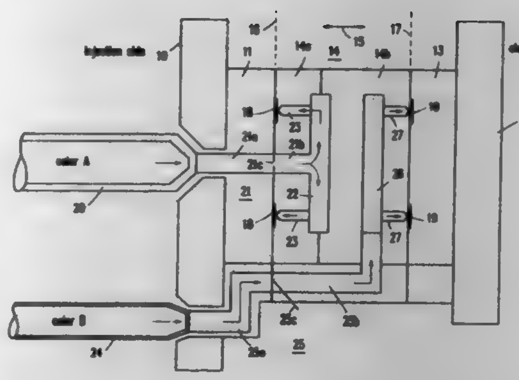

an intermediate assembly arranged to be movable between said mold plates and which comprises a first distributor plate adjoining the fixed mold plate and a second distributor plate adjoining the movable mold plate;

the first and second distributor plates being respectively connected to first and second supply channels which supply injection-molding material thereto for distribution from the first supply channel to the fixed mold plate and from the second supply channel to the movable mold plate.

5,700,501
INJECTION MOLD FOR MOLDING DISCS
Kazuki Miyairi, Nagano-ken, Japan, assignor to Nissei Plastic Industrial Co., Ltd., Nagano-ken, Japan
Filed Jan. 30, 1996, Ser. No. 593,829
Claims priority, application Japan, Jan. 31, 1995, 7-034538
Int. Cl.⁶ B29C *45/38*
U.S. Cl. 425—577 **2 Claims**

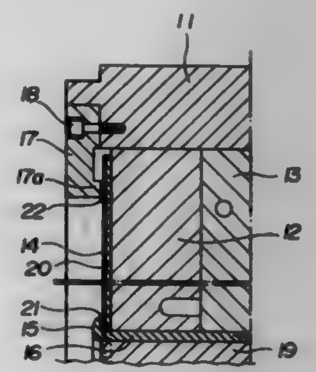

1. An injection mold for molding discs comprising a base die, a board fitted inside said base die, a stamper in the form of a doughnut fitted to the front surface of said board, an outer ring fitted to the front end of said base die, and a sleeve having a flange formed on its one open end fitted to the center of said board,

said injection mold characterized in that a thin disc, having a projection substantially similar to that of said stamper and a thickness greater than that of said stamper, is interposed closely between said stamper and said board so that the front surface of said thin disc which is finished as a mirror surface contacts with the back surface of said stamper,

wherein at least one of said ring and said flange enables fixing of said stamper and said thin disc to said board.

5,700,502
INJECTION MOLDING MACHINE FOR PROCESSING SYNTHETIC MATERIALS
Karl Hehl, Arthur-Hehl-Str. 32, D-72290 Lossburg, Germany
Filed Sep. 28, 1994, Ser. No. 313,871
Claims priority, application Germany, Sep. 30, 1993, 43 33 365.6; Apr. 2, 1994, 44 11 649.7
Int. Cl.⁶ B29C *45/36*
U.S. Cl. 425—589 **22 Claims**

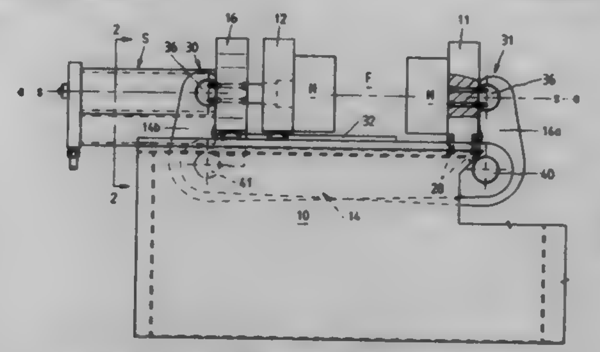

1. An injection molding machine, comprising:
(a) a machine base;
(b) a stationary mold carrier fixedly connected with said machine base;
(c) a movable mold carrier displaceably mounted on said machine base for movements towards and away from said stationary mold carrier to assume open and closed positions with respect to said stationary mold carrier; said movable mold carrier and said stationary mold carrier defining therebetween a mold clamping space;
(d) force-exerting means connected to said movable mold carrier for moving said movable mold carrier into and out of said closed position and for applying a clamping force to said movable mold carrier in said closed position thereof for urging said movable mold carrier against said stationary mold carrier;
(e) a supporting element displaceably mounted on said machine base for supporting at least one part of said force-exerting means; and
(f) force take-up means for receiving forces and deformations occurring when said movable mold carrier is in said closed position and said force-exerting means applies said clamping force; said force take-up means comprising
(1) a first individual component being jointedly connected to said stationary mold carrier at a first coupling point; and
(2) a second individual component being jointedly connected to said supporting element at a second coupling point; said first and second individual components being directly articulated to one another at least one connecting point located at an essentially fixed distance from the first and second coupling points; said first and second individual components being void of a force-transmitting connection with said machine base for isolating said machine base from forces taken up by said force take-up means.

5,700,503
FOOD SUPPLEMENT COMPRISING A MINERAL COMPLEX AND A METHOD FOR ITS PRODUCTION
Kunio Hirota, Sohka, Japan, assignor to M.P.G. Co. Ltd., Tokyo, Japan
Filed Apr. 2, 1996, Ser. No. 626,327
Int. Cl.⁶ A23L *1/304*
U.S. Cl. 426—74 **9 Claims**

1. A food supplement comprising a mineral complex which comprises minerals extracted from coral, wherein said coral is not a ground material, by soaking the coral in an organic acid solution which is suitable for ingestion to form a resultant soaking solution comprising a supernatant and a precipitate; and separating at least one component, selected from the group consisting of supernatant and precipitate, from the other components of the soaking solution, and wherein said at least one component is employed as a food supplement.

5,700,504
METHOD FOR MAINTAINING INTERIOR QUALITY OF IRRADIATED SHELL EGGS
Kirk K. Hale, Jr., Daytona Beach, Fla., assignor to Michael Foods, Inc., Minneapolis, Minn.
Filed Aug. 15, 1995, Ser. No. 515,228
Int. Cl.⁶ A23L *1/32*
U.S. Cl. 426—240 **5 Claims**

1. A method of treating a shell egg irradiated with ionizing radiation at a dose at least sufficient to cause a three-log reduction in Salmonella sp., comprising heating said shell egg prior to said irradiation to reduce irradiation-induced thinning of said shell egg's albumen that would occur in the absence of said heating.

5,700,505
METHOD OF IMPROVING HEAD RICE YIELD
William D. Hurst, Orlando, Fla., assignor to MEI Research, Inc., Orlando, Fla.
Filed Dec. 28, 1995, Ser. No. 580,471
Int. Cl.⁶ A23L *1/182*
U.S. Cl. 426—312 **30 Claims**

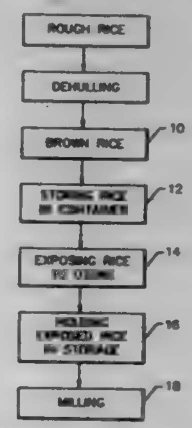

1. A method for pre-treating dehulled brown rice having a bran coat for producing head rice, the method comprising the steps of:
generating ozone gas;
providing dehulled brown rice having a bran coat thereon;
exposing the dehulled rice to an atmosphere of the generated ozone gas greater than that found in ambient air; and
storing the ozone-exposed rice for a period of time such that the generated ozone gas interacts with the brown rice to effect loosening of the bran coat prior to milling the bran coat from the dehulled rice.

20. A method for pretreating dehulled grains which still retain their bran coats, the method comprising the sequential steps of:
generating ozone gas;
exposing dehulled grain having a bran coat thereon to an atmosphere containing a concentration of the generated ozone gas greater than that found in ambient air; and
storing the ozone exposed grain for a period of time such that the ozone interacts with the exposed grain to effect loosening of the bran coat, wherein the amount of ozone gas, the exposure time of the exposed grain to the ozone gas, and the storage time of the exposed grain prior to milling of the grain all being in an amount sufficient to provide an increased yield of unbroken grain when compared to the same milling employed on grain that has not been exposed to the concentration of ozone and that has not been stored for the time period after exposure and before milling to remove the bran coat.

5,700,506
METHOD FOR PROLONGING THE SHELF LIFE OF FRESH TOMATO PIECES
Gurmail Mudahar, Hayward, Calif., assignor to DNA Plant Technology Corporation, Oakland, Calif.
Filed Oct. 27, 1995, Ser. No. 549,344
Int. Cl.⁶ A23B *4/027;* **B65B** *55/00*
U.S. Cl. 426—316 **1 Claim**

1. A method for preparing packaged fresh tomato pieces with increased shelf life comprising the steps:
i) contacting a cored fresh tomato with between about 80 and about 100 parts per million chlorine for between about 30 seconds and about 120 seconds;
ii) cutting the tomato into at least two pieces, whereupon tomato pieces are produced;
iii) contacting the tomato pieces with an aqueous solution of a calcium salt, wherein the concentration of the calcium salt is about 0.4% (w/v);
iv) packaging the tomato pieces in a plastic container that has a gas permeability of between about 120 to about 140 cc of oxygen/100 square inch/day when measured at one atmosphere pressure and 73° F.; said plastic container comprising a 2.25 mil laminate film comprising three layers, said three layers comprising a first layer comprising oriental polypropylene, a second layer comprising low density polyethylene and a third layer comprising ethylene vinyl acetate; and,
v) sealing the plastic container in the presence of nitrogen gas wherein the residual oxygen level in the container after sealing is between about 4% and about 5%;
wherein steps (i) through (v) are carried out at an ambient temperature of between about 38° F. and about 42° F.

5,700,507
PROCESS FOR TREATING RED MEAT, POULTRY AND SEAFOOD TO CONTROL BACTERIAL CONTAMINATION AND/OR GROWTH
Fredric G. Bender, McMurray; Charles Mostoller, Langhorne, and Evelyn Marie Frankovich, Burgettstown, all of Pa., assignors to Rhone-Poulenc Inc., Cranbury, N.J.
Filed May 10, 1996, Ser. No. 644,552
Int. Cl.⁶ A23L *3/34;* **A22C** *21/00*
U.S. Cl. 426—332 **14 Claims**

1. A process for treating animals and/or seafood comprising the step of contacting the animal and/or seafood with a treatment solution containing trialkali metal orthophosphate at a temperature of between about 90° F. and about 200° F. for a time period effective to remove, reduce or retard bacterial contamination without significantly depreciating the organoleptic properties of the animal and/or seafood and wherein the concentration of said trialkali metal orthophosphate in said solution is between less than about 0.1 to about 4.0 percent by weight.

5,700,508
PROCESS FOR THE MANUFACTURE OF FRIED POTATOES
Shinichi Makishima, and Keizo Mochizuki, both of Sakado, Japan, assignors to Meiji Seika Kaisha, Ltd., Tokyo, Japan
Filed Dec. 27, 1994, Ser. No. 363,877
Claims priority, application Japan, Dec. 27, 1993, 5-331552
Int. Cl.⁶ A23L *1/217*
U.S. Cl. 426—441 **4 Claims**

1. A process for the manufacture of fried potatoes wherein the fried potatoes can be marketed without a need for refrigeration, which comprises the steps of cutting potatoes into pieces, wherein the potatoes have a specific gravity of 1.070–1.085, blanching the pieces by dipping the same into hot water at a temperature of 60°–70° C. for 5–10 minutes, primary frying the blanched potato pieces in an edible oil at a temperature of 160°–190° C., immediately freezing the fried pieces by exposing the same to a temperature not higher than −20° C., secondary frying the frozen potato pieces in an edible oil at a temperature of 170° to 190° C., and drying the resulting fried pieces to bring their moisture content and oil content to 0.5–5% by weight and 30–35% by weight, respectively.

5,700,509
METHOD OF FRACTIONATING AN EDIBLE OIL CONTAINING 2-PALMITOYL-1,3-DIOLEYLGLYCEROL
Mototake Murakami; Seiichiro Aoe, both of Sayama, and Kiyoshi Tatsumi, Iruma, all of Japan, assignors to Snow Brand Milk Products Co., Ltd., Japan
Filed Nov. 7, 1994, Ser. No. 335,125
Claims priority, application Japan, Nov. 24, 1993, 5-317392
Int. Cl.⁶ A23D *7/00*
U.S. Cl. 426—495 **7 Claims**

1. A process for producing an easily-digestible and easily-absorbable edible oil or fat composition which contains 20% by weight or more 2-palmitoyl-1,3-dioleylglycerol, said process comprising:
a. providing an edible oil or fat containing at least about 5% by weight, but less than 20% by weight, of 2-palmitoyl-1,3-dioleylglycerol,
b. contacting the oil or fat with an organic solvent at a temperature at which the oil or fat is dissolved in the solvent thereby forming a liquid mixture;
c. cooling the mixture at a rate of not more than about 1° C. per hour to a reduced temperature thereby causing a portion of the oil or fat to solidify and maintaining the mixture at said reduced temperature; and
d. separating the solid oil or fat from the mixture;
wherein the liquid oil or fat remaining after step (d) comprises about 20% by weight or more of2-palmitoyl-1,3-dioleylglycerol.

5,700,510
PRESSURE-CONTROLLED DIE APPARATUS FOR THE PRODUCTION OF EXTRUSION-COOKED AQUATIC FEEDS
Bobbie W. Hauck, Sabetha, Kans., assignor to Wenger Manufacturing Inc., Sabetha, Kans.
Filed Jul. 18, 1996, Ser. No. 683,191
Int. Cl.⁶ A23P *1/00;* **B29C** *47/00*
U.S. Cl. 426—516 **18 Claims**

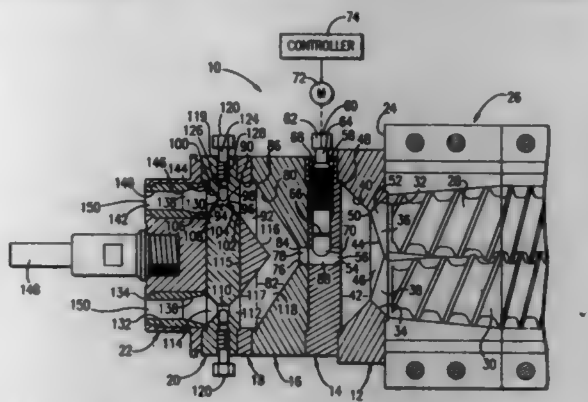

10. A method of extruding a product leaving the outlet end of an extruder barrel, said method comprising the steps of:
passing the product in successive order into and through an inlet-end chamber adjacent the outlet end, a secondary chamber downstream of said inlet-end chamber, and a plurality of individual, spaced die-outlet orifices downstream of the secondary chamber; and
subjecting the product to first, second, and third magnitudes of operating pressures within the inlet-end chamber, secondary chamber, and die-outlet orifices respectively, with the first magnitude being greater than the second magnitude, and the second magnitude being greater than the third magnitude.

5,700,511
SUGARLESS BAKERY GOODS, E.G., CAKES AND MUFFINS
Glenn Wallin, Seattle, Wash., assignor to Bunge Foods Corporation, Seattle, Wash.
Continuation of Ser. No. 277,323, Jul. 19, 1994, Pat. No. 5,523,107. This application Mar. 1, 1996, Ser. No. 609,459
Int. Cl.⁶ A21D *10/00*
U.S. Cl. 426—549 **22 Claims**

1. An essentially sugar-free cake or muffin batter formulation which, upon heating to an appropriate baking temperature will increase in volume to form a baked cake or muffin comprising:
(a) an oligomeric polyol bulking and sweetening agent predominantly having the following structural formula (I):

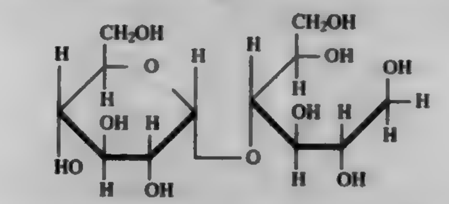

(I)

in an amount of about 20% to about 30% by weight of the batter formulation;
(b) an edible oil or fat in an amount of about 10% to about 20% by weight of the formulation;
(c) a protein source selected from the group consisting of flour, gluten, starch and mixtures thereof in an amount of about 15% to 37% by weight of the formulation;
(d) one or more whole eggs in an amount of about 10% to about 25% by weight of the formulation;
(e) a leavening agent in an amount of about 0.1% to about 2% by weight of the formulation;
(f) a high potency, sugarless sweetening agent in an amount of about 0.1% to about 1% by weight of the formulation;
(g) a flavoring agent in an amount of about 0.1% to about 5% by weight of the formulation; and
(h) water in an amount of about 8% to 30% by weight of the formulation.

5,700,512
PREPARATION OF FOOD EXTRUDATE WHICH FLOATS DURING REHYDRATION
Jean-Jacques Desjardins, Denges, and Pierre Dupart, Preverenges, both of Switzerland, assignors to Nestec S.A., Vevey, Switzerland
PCT No. PCT/CH94/00155, § 371 Date May 15, 1995, § 102(e) Date May 15, 1995, PCT Pub. No. WO95/04475, PCT Pub. Date Feb. 16, 1995
PCT Filed Jul. 26, 1994, Ser. No. 403,736
Claims priority, application Switzerland, Aug. 11, 1993, 2384/93
Int. Cl.⁶ A23L *1/16*
U.S. Cl. 426—557 **15 Claims**

1. A process for preparing a dried food product comprising introducing into a twin-screw extruder ingredients which comprise a ground cereal substance selected from the group consisting of cereal flour and semolina and which comprise a fat, water and a filler substance selected from the group consisting of a protein substance and a glucide substance and extrusion-cooking the ingredients to obtain an extruded, cooked product, cutting the extruded, cooked product to obtain product pieces and then drying the product pieces and wherein the ingredients are introduced in amounts and are extrusion-cooked under a temperature of from 80° C. to 160° C. under a pressure of from 60 bar to 150 bar so that upon the extrusion-cooking, the extruded, cooked product has, by weight, a fat content of from 6% to 14% and a moisture content of from about 10% to 16% and so that upon the extrusion-cooking and drying, the dried product has a specific gravity of from 150 g/l to 500 g/l and wherein the extruded, cooked product is cut so that the dried product has a thickness of from 1.5 mm to 5 mm.

5,700,513
LIQUID NUTRITIONAL PRODUCT CONTAINING IMPROVED STABILIZER COMPOSITION
Rohini Prakash Mulchandani, Worthington, and Mohamed Ibrahim Mahmoud, Columbus, both of Ohio, assignors to Abbott Laboratories, Abbott Park, Ill.
Filed Jan. 19, 1996, Ser. No. 588,957
Int. Cl.⁶ A23L *1/05;1/304*
U.S. Cl. 426—590 **22 Claims**

1. A liquid nutritional product comprising:
(a) a source of carbohydrate;
(b) a source of protein;
(c) a source of fat; said liquid nutritional product containing fat at a concentration sufficient to have said liquid nutritional mixture be susceptible to creaming;
(d) a source of minerals; said minerals present at a concentration sufficient to have said liquid nutritional product be susceptible to sedimentation;
(e) a stabilizer composition comprising:
(i) iota-carrageenan present in an amount in the range of from about 100 ppm to about 800 ppm of said liquid nutritional product; and
(ii) a mixture of microcrystalline cellulose and carboxymethyl cellulose, said mixture containing 85–91 wt. % microcrystalline cellulose and wherein said mixture is present in an amount in the range of from about 600 to about 3000 ppm of said liquid nutritional product.

5,700,514
LOZENGES COMPRISING BINDER AND ERYTHRITOL OR MALTITOL AS SWEETENER AND PROCESS OF MAKING
Michel Henri André Gonze, Brussels; Freddy Maurits Luc Van Der Schueren, Aalst, and André Léon Ivon Rapaille, Knokke-Heist, all of Belgium, assignors to Cerestar Holding B.V., Netherlands
Filed Aug. 26, 1992, Ser. No. 935,553
Claims priority, application United Kingdom, Aug. 29, 1991, 9118484
Int. Cl.⁶ A23G *3/00*
U.S. Cl. 426—660 **5 Claims**

1. A process for producing a lozenge containing a sweetener and a binding agent in which the sweetener consists essentially of at least one member of the group consisting of erythritol and maltitol, said process comprising:
a. kneading the sweetener at a temperature in the range 35° to 60° C. while slowly adding an aqueous solution of the binding agent thereto,
b. kneading the sweetener and the binder into a smooth, homogenous paste,
c. forming the paste into a lozenge, and
d. heating the lozenge at a temperature in the range 40° to 50° C. to harden it,
the amounts of binder and sweetener in the composition used to make the lozenge being 0.2 to 3.0 and 98.0 to 71.0% by weight, respectively, together with 1.8 to 26.0% water.

5,700,515
OPTIMIZING GRAY PRIMER IN MULTILAYER COATINGS

Allan Blase Joseph Rodrigues, Bloomfield Hills, Mich., assignor to E. I. Du Pont de Nemours and Company, Wilmington, Del.

Filed May 13, 1996, Ser. No. 645,392
Int. Cl.[6] B05D *5/06; 1/36; 7/16*
U.S. Cl. 427—140 **6 Claims**

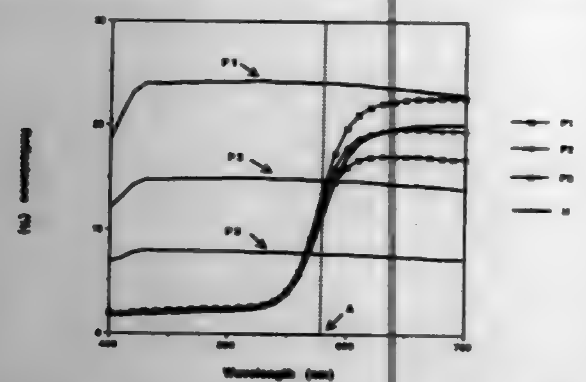

1. A method for applying multiple layers of coating compositions on a previously painted substrate by first applying a layer of a coating of a primer composition and then applying over the primer coating a top coating that matches the color of the painted substrate at less than complete hiding to achieve a color match of the top coating and the previously painted substrate which comprises applying a gray or white primer composition at complete hiding having a reflectance in its dried state which is essentially the same as the top coating measured at the wave length of minimum absorption of the top coating.

5,700,516
REPULPABLE HOT MELT POLYMER/WAX COMPOSITIONS FOR FIBROUS PRODUCTS

Paul E. Sandvick, and Calvin J. Verbrugge, both of Racine, Wis., assignors to S. C. Johnson Commerical Markets, Inc., Sturtevant, Wis.

Division of Ser. No. 567,838, Dec. 6, 1995, abandoned, which is a continuation of Ser. No. 96,133, Jul. 22, 1993, abandoned. This application Oct. 18, 1996, Ser. No. 733,534
Int. Cl.[6] D21H *19/00*
U.S. Cl. 427—155 **44 Claims**

1. A method of rendering fibrous articles water-resistant that comprises the steps of

heating a hot melt polymer/wax composition that is dispersible in a heated nearly neutral to alkaline aqueous pH medium comprising

A. from about 20% to 97.5% by weight based upon the total weight of the composition of a water-repellent wax that is a solid at 20° C.;

B. from about 2.5% to 50% by weight based upon the total weight of the composition of at least one addition polymer selected from the group consisting of

(i) a polymer of from about 5 to 95 mole percent of at least one ethylenically unsaturated monocarboxylic acid monomer containing a free carboxyl group and from about 5 to 95 mole percent of at least one additional ethylenically unsaturated monomer,

(ii) a polymer of from about 50 to 95 mole percent of at least one ethylenically-unsaturated dicarboxylic acid monomer selected from the group consisting of an ethylene-1,2-dicarboxylic acid containing two free carboxyl groups and an ethylene-1,2-dicarboxylic acid anhydride having two carboxyl groups in the form of an anhydride group, and from about 5 to 50 mole percent of at least one additional ethylenically unsaturated monomer, and

(iii) a polymer of a total of from about 5 to 95 mole percent of (a) at least one of the ethylenically unsaturated monocarboxylic acid monomers and (b) at least one of the ethylenically-unsaturated dicarboxylic monomers and from about 5 to 95 mole percent of at least one additional ethylenically unsaturated monomer, wherein the additional ethylenically unsaturated monomer is selected from the group consisting of 1-alkenes having from about 4 to 60 carbon atoms; alkyl vinyl ethers having an ether alkyl group of from about 8 to 60 carbon atoms, and alkyl acrylates or alkyl methacrylates having an alkyl group of from about 8 to 60 carbon atoms, wherein the polymer is compatible with the water-repellent wax; and

C. optionally, up to about 77.5% by weight based upon the total weight of the composition of at least one fatty acid selected from the group consisting of natural or synthetic fatty acids containing from about 12 to 48 carbon atoms, wherein the fatty acid is compatible with the polymer and wax, the total amount of wax, polymer and fatty acid comprising 100% of the total composition and the polymer is at least 2.5% by weight of the total composition, wherein the composition is a solid at 20° C., but starts to become fluid between about 50° C. and 95° C., until it becomes fluid,

applying to a fibrous article an amount of the fluid heated composition that is effective to render it water-resistant, and

allowing the composition to cool to room temperature to form a coated fibrous article having a solid coating that is removable upon exposure of the coated fibrous article to a heated nearly neutral to alkaline pH medium.

5,700,517
PROCESS FOR THE DENSIFICATION OF A POROUS STRUCTURE BY BORON NITRIDE

Patrick David, Paris; Jean D. Benazet, Bretigny, and Bruno Narcy, Montreuil, all of France, assignors to Commissariat a l'Energie Atomique, Paris, France

PCT No. PCT/FR94/03171, § 371 Date May 24, 1996, § 102(e) Date May 24, 1996, PCT Pub. No. WO95/14645, PCT Pub. Date Jun. 1, 1995
PCT Filed Nov. 24, 1994, Ser. No. 648,143
Claims priority, application France, Nov. 26, 1993, 93 14182
Int. Cl.[6] C04B *35/5835;* **B05D** *3/02*
U.S. Cl. 427—226 **5 Claims**

1. A process for densifying a porous structure having pores by depositing boron nitride in the pores comprising the steps of:

placing said porous structure in contact with a boron nitride precursor comprising a borazene having the formula RBNH, wherein R is a halogen or hydrogen, heating said boron nitride precursor at a pressure of at least 1.2×10^5 Pa to a temperature of at least 600° C., and

forming boron nitride by decomposing said boron nitride precursor and depositing said boron nitride in said pores of said porous structure to form a densified structure.

5,700,518
FABRICATION METHOD FOR DIAMOND-COATED CEMENTED CARBIDE CUTTING TOOL

Wook-Seong Lee, Kyungki-Do; Young-Joon Baik, and Kwang Yong Eun, both of Seoul, all of Rep. of Korea, assignors to Korea Institute of Science and Technology, Seoul, Rep. of Korea

Filed Sep. 12, 1996, Ser. No. 712,707
Claims priority, application Rep. of Korea, Apr. 26, 1996, 13138/1996
Int. Cl.[6] C23C *16/26;* **B05D** *3/10*
U.S. Cl. 427—249 **5 Claims**

1. A fabrication method for a diamond-coated cemented carbide cutting tool, comprising:

electrolytically etching a cemented carbide cutting tool with an etchant selected from the group consisting of a NaOH aqueous solution and a KOH aqueous solution;

etching a cobalt binder phase of the electrolytically etched cemented carbide cutting tool with a mixed solution of sulfuric acid and hydrogen peroxide;

seeding the etched cemented carbide cutting tool with a diamond powder slurry; and

depositing a diamond film on the seeded cemented carbide cutting tool.

5,700,519
METHOD FOR PRODUCING ULTRA HIGH PURITY TITANIUM FILMS

Raymond K. F. Lam, Park Ridge, N.J., assignor to Sony Corporation, Tokyo, Japan, and Materials Research Corp., Gilbert, Ariz.

Filed Jan. 6, 1995, Ser. No. 369,389
Int. Cl.[6] C23C *16/08*
U.S. Cl. 427—253 **11 Claims**

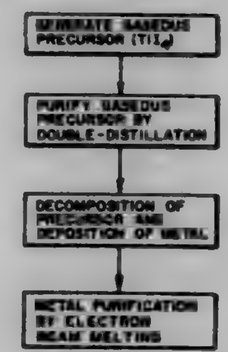

1. A method of making ultra high purity titanium metal, comprising the steps of:

generating gaseous TiI_4 in situ by reacting titanium metal starting material with gaseous iodine in a reaction chamber under vacuum conditions, said reaction occurring at a steady state temperature in the range of about 500°–750° C.;

transferring the gaseous reaction product TiI_4 to a first distillation column;

distilling said TiI_4 in said first distillation column to remove lower volatility impurities, said first distillation column operated at a temperature in the range of about 150°–370° C. and at a pressure in the range of about 0.05–670 torr to produce partially pure TiI_4;

transferring the partially pure TiI_4 to a second distillation column;

distilling said partially pure TiI_4 in said second distillation column to remove higher volatility impurities, said second distillation column operated at a temperature in the range of about 150°–370° C. and at a pressure in the range of about 0.05–670 torr to produce ultra high purity of greater than 99.998% TiI_4;

transferring the ultra high purity TiI_4 in liquid form to a deposition chamber heated to a temperature of about 200° C. to vaporize the liquid TiI_4; and

contacting a titanium deposition substrate located within the deposition chamber and heated to a temperature in the range of about 1100°–1400° C. with the ultra high purity TiI_4 vapor, whereby said TiI_4 decomposes and ultra high purity of greater than 99.998% titanium metal is deposited on said substrate.

5,700,520
LOW TEMPERATURE, HIGH PRESSURE SILICON DEPOSITION METHOD

Israel Beinglass, Sunnyvale, and David K. Carlson, Santa Clara, both of Calif., assignors to Applied Materials, Inc., Santa Clara, Calif.

Continuation of Ser. No. 430,582, Apr. 28, 1995, Pat. No. 5,607,724, which is a continuation of Ser. No. 742,954, Jan. 9, 1991, abandoned, which is a continuation of Ser. No. 1,216, Jan. 6, 1991, abandoned, which is a continuation of Ser. No. 742,954, Aug. 9, 1991, abandoned. This application Jan. 19, 1996, Ser. No. 668,025
Int. Cl.[6] C23C *16/00*
U.S. Cl. 427—255.1 **8 Claims**

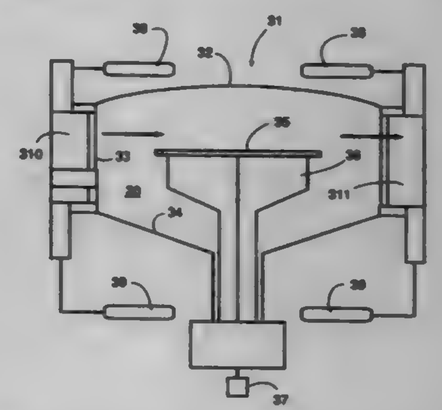

1. A thermal chemical vapor deposition method of depositing a layer comprising doped or undoped amorphous silicon and mixtures thereof with polycrystalline silicon comprising:

a) loading a substrate into a chemical vapor deposition vacuum chamber;

b) controlling the temperature of the substrate to between about 600° and about 690° C.; and

c) adding a silane selected from the group consisting of monosilane, disilane, monosilane mixed with a dopant gas and disilane mixed with a dopant gas, to the chamber and maintaining the pressure of the chamber between about 10 and 350 Torr until the silicon layer is deposited on the substrate.

5,700,521
METHOD OF PRODUCING A DECORATIVE PLATE

Yataro Horikiri, Tokyo, Japan, assignor to Sakura Hobby Craft Co., Ltd., Tokyo, Japan

Filed Dec. 22, 1995, Ser. No. 576,977
Claims priority, application Japan, Aug. 2, 1995, 7-197582
Int. Cl.[6] B05D *1/38; 5/00*
U.S. Cl. 427—258 **2 Claims**

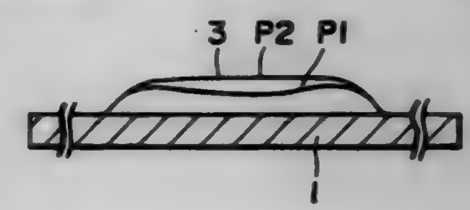

1. A method of producing a decorative plate comprising the steps of:

preparing a base plate having thereon a design,

applying first water-based acrylic paint on the design to thereby provide a design which is expanded three-dimensionally,

curing the paint to form a first cured transparent film portion,

applying second water-based acrylic paint on the first cured transparent film portion to thereby further expand first cured transparent film portion three-dimensionally, and

curing the further expanded three-dimensional film portion to form a second cured transparent three-dimensional film portion on the design on the base plate,

wherein the water-based acrylic paint is prepared by adding 45 to 50 wt % of water, 0.5 to 1.0 wt % of ammonia. 1.0 wt % or less of anti-forming agent and 2.0 wt % or less of nonionic surface active agent to acrylic copolymerization material dispersions having specific gravity of 1.05 and viscosity of 250–300 cP.

5,700,522
AQUEOUS EMULSION-BASED COATING COMPOSITIONS
Mark A. Nonweiler, Oshkosh, Wis.; Gregory F. Konrad, Rte. 1, Box 299F, Van Dyne, Wis. 54979, and Dennis A. Wiatrowski, Oshkosh, Wis., assignors to Gregory F. Konrad, Van Dyne, Wis.
Division of Ser. No. 156,999, Nov. 24, 1993, Pat. No. 5,610,215, which is a continuation of Ser. No. 707,890, May 31, 1991, abandoned, and a continuation-in-part of Ser. No. 504,317, Apr. 3, 1990, abandoned. This application Jun. 7, 1995, Ser. No. 476,323
Int. Cl.^{6} B32B *15/08*
U.S. Cl. 427—388.4 **37 Claims**

1. A method of coating a substrate commonly used for modeling and toys which comprises:

applying to a substrate commonly used for modeling or toys an aqueous emulsion-based coating composition consisting essentially of:

(A) about 20 parts to about 50 parts by weight of a latex binder having a Tg of at least 30° C. selected from the group consisting of waterborne polyurethane dispersions, epoxy emulsions, vinyl acetate copolymers, carboxylated ethylene vinyl acetate, carboxylated acrylic copolymers, hydroxy acrylic copolymers, acrylonitrile acrylic copolymers, self-crosslinking acrylic copolymers, carboxylated polyvinylchloride acrylic copolymers, carboxylated styrene-butadiene copolymer, styrene butadiene, styrene-acrylate copolymers, and vinyl-pyridine copolymers, and mixtures thereof, dispersed in water;

(B) up to about 60 parts by weight of a filler selected from the group consisting of pigments, aluminum silicate, magnesium silicate, barium sulfate, calcium carbonate, amorphous silica, microcrystalline silica, and mixtures thereof, and

(C) coalescents in an amount of 2.8% to 16.5% by weight of said coating composition, and humectants in an amount of about 5% to about 15% by weight of said coating composition,

said composition having a viscosity of from about 20 centipoise to about 1500 centipoise as measured using a standard Brookfield viscosity test using a RVT #2 spindle at 10 RPM, a filler to binder ratio of from 0.1:1 to about 3:1, and a total solids content of 20% to 60% by weight; and

drying said coating composition to form a dried film coating on said substrate.

5,700,523
METHOD FOR TREATING METAL SURFACES USING A SILICATE SOLUTION AND A SILANE SOLUTION
Anthony P. Petrole, Ashland, and José B. Rivera, Philadelphia, both of Pa., assignors to Bulk Chemicals, Inc., Leesport, Pa.
Filed Jun. 3, 1996, Ser. No. 657,352
Int. Cl.^{6} C23C *22/34*
U.S. Cl. 427—397.8 **10 Claims**

1. A method for treating a metal surface to improve corrosion resistance and paint adhesion of the metal surface, said method comprising the steps of:

contacting the metal surface with a first bath, having a pH of at least about 8 and comprising an aqueous silicate solution consisting of water and a compound selected from the group consisting of sodium silicate and potassium silicate in a concentration of from about 0.1 gram/liter to 100 grams/liter, to form a silicate-coated metal surface;

contacting the silicate-coated metal surface with a second bath, comprising an aqueous organo-functional silane solution consisting of water and an aminopropyl silane in a concentration of from about 0.1 gram/liter to 100 grams/liter, to form a silane-coated metal surface; and

contacting the silane-coated metal surface with a third bath comprising a chrome-free pretreatment consisting of the reaction product of a polymer system having hydroxyl and carboxylic functional groups and a compound of a group IV-B element.

5,700,524
HIGH SPEED COATING STARTS USING A SHEAR THINNING TOP LAYER
Joseph W. Hoff, Fairport; Douglas S. Finnicum, Webster, and Steven J. Weinstein, Fairport, all of N.Y., assignors to Eastman Kodak Company, Rochester, N.Y.
Filed Jul. 30, 1996, Ser. No. 688,487
Int. Cl.^{6} B05D *1/30;1/26*
U.S. Cl. 427—402 **8 Claims**

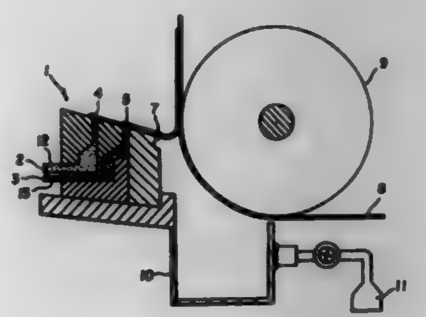

1. A method of applying multiple layers of coating liquids to a moving support comprising:

moving a support along a path through a coating zone;

forming two or more layers including a topmost layer of coating liquid to form a liquid coating composition; and

applying the liquid coating composition to the moving support in the coating zone wherein the topmost layer of the liquid coating composition is topmost before and after reaching the support and is shear thinning.

5,700,525
PASSIVATION METHOD AND COMPOSITION FOR GALVANIZED METAL SURFACES
Jiangbo Ouyang, Media, and William L. Harpel, Langhorne, both of Pa., assignors to BetzDearborn Inc., Trevose, Pa.
Continuation-in-part of Ser. No. 412,827, Mar. 29, 1995, abandoned. This application Feb. 7, 1996, Ser. No. 594,883
Int. Cl.^{6} B05D *3/00;1/36*
U.S. Cl. 427—416 **4 Claims**

1. A process for passivating a galvanized metal surface with a substantially chromium free passivation treatment comprising including in said substantially chromium free passivation treatment from about 0.1% to about 20% by weight of a paraffin wax having a melting point of from about 90° to 200° F. and from about 1% to about 20% by weight of one or more nonionic surfactants having HLB values of from about 2 to about 18.

5,700,526
INSULATOR DEPOSITION USING FOCUSED ION BEAM
Hongyu Ximen; Michael A. Cecere, and Douglas Masnaghetti, all of San Jose, Calif., assignors to Schlumberger Technologies Inc., San Jose, Calif.
Filed May 4, 1995, Ser. No. 434,548
Int. Cl.^{6} C23C *14/10*
U.S. Cl. 427—527 **14 Claims**

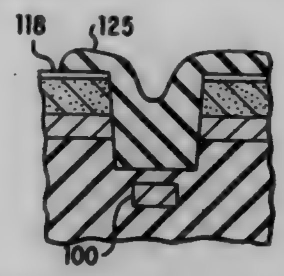

1. A method of depositing material on an integrated circuit, comprising:

a. placing an integrated circuit in a vacuum chamber,
b. applying to a localized surface region of the integrated circuit at which insulator material is to be deposited, a first gas containing molecules of a dissociable compound comprising atoms of silicon and oxygen and a second gas containing molecules of a compound which reacts with metal ions;
c. generating a focused ion beam having metal ions of sufficient energy to dissociate molecules of the first gas; and
d. directing the focused ion beam at the localized surface region to dissociate at least some of the molecules of the first gas and to thereby deposit on at least a portion of the localized surface region a material containing atoms of silicon and oxygen.

5,700,527
SOUND-ABSORBING GLASS BUILDING COMPONENT OR TRANSPARENT SYNTHETIC GLASS BUILDING COMPONENT
Helmut Fuchs, Schönbuch, Germany, and Xueqin Zha, Böblingen, China, assignors to Fraunhofer-Gesellschaft Zur Foerderung der Angewandten Forschung e.v., Munich, Germany
PCT No. PCT/EP94/01511, § 371 Date Nov. 13, 1995, § 102(e) Date Nov. 13, 1995, PCT Pub. No. WO94/26995, PCT Pub. Date Nov. 24, 1994
PCT Filed May 10, 1994, Ser. No. 545,845
Claims priority, application Germany, Nov. 5, 1993, 43 15 759.9
Int. Cl.^{6} G10K *11/16*
U.S. Cl. 428—34.4 **20 Claims**

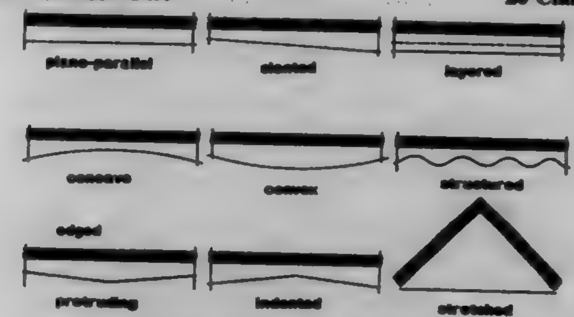

1. A sound absorbing arrangement comprising a panel formed of glass or synthetic glass, said panel having first and second surfaces defining a panel thickness, said first surface being located at a distance from a building component surface and facing said building component surface such that said first surface and said building component surface define an air space therebetween, said second surface facing away from said building component surface and being exposed to an ambient atmosphere and soundwaves travelling through said ambient atmosphere, said panel defining a plurality of microperforated holes extending through said panel thickness to communicate said ambient atmosphere located opposite said building component surface with said air space.

5,700,528
HEAT RECOVERABLE ARTICLE
Anthony Ronald Leslie Fitch, Swindon, England, assignor to Raychem Limited, Swindon, United Kingdom
PCT No. PCT/GB94/00097, § 371 Date Jul. 19, 1995, § 102(e) Date Jul. 19, 1995, PCT Pub. No. WO94/16874, PCT Pub. Date Aug. 4, 1994
PCT Filed Jan. 19, 1994, Ser. No. 492,059
Claims priority, application United Kingdom, Jan. 21, 1993, 9301110
Int. Cl.^{6} B65B *53/02;* **F16B** *4/00;* **B29C** *61/02*
U.S. Cl. 428—34.9 **11 Claims**

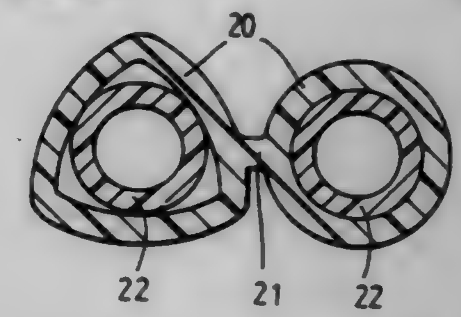

1. A hose coupling article comprising a resiliently flexible ring of dimensionally heat recoverable polymeric material whose tubular length is less than its notional circular diameter, formed so that it inherently maintains a non-circular open configuration enabling it to grip resiliently an object around which it is placed in use prior to heat recovery, the maximum transverse dimension of the said object being at least 2.5% less than the notional circular diameter of the ring and the ring being laterally connected to at least one other such ring so that the connected rings are capable of securing together at least two flexible hoses.

5,700,529
SEAMLESS CAN AND A METHOD OF PRODUCING THE SAME
Akira Kobayashi, Chigasaki; Hideo Kurashima, Yokosuka; Harumi Sato, Yokohama; Satoshi Fujita, Yokohama, and Katsuhiro Imazu, Yokohama, all of Japan, assignors to Toyo Seikan Kaisha, Ltd., Tokyo, Japan
Filed Feb. 2, 1995, Ser. No. 382,639
Claims priority, application Japan, Feb. 3, 1994, 6-011886
Int. Cl.^{6} B32B *15/08;* **B65D** *90/04*
U.S. Cl. 428—35.8 **4 Claims**

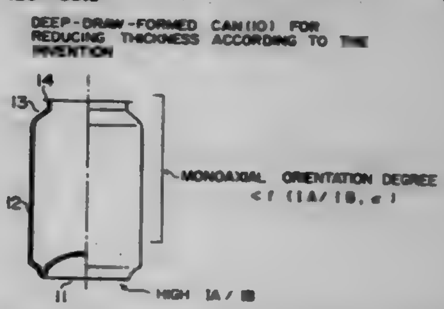

1. A seamless can obtained by forming a laminated material of a metal and a polyester film into a cup such that a final draw ratio defined by H/D, where H is equal to said can's height and D is equal to the diameter of said can's bottom portion, is not smaller than 1.5, wherein a polyester (A) on the bottom portion of the can has a biaxial orientation degree Rx defined by the following formula,

$$Rx=I_A/I_B$$

wherein I_A is a diffraction intensity by a diffraction plane having a spacing of about 0.34 nm CuKα X-ray diffraction angle is from 24° to 28° in parallel with the polyester film surface on the bottom portion, and I_B is a diffraction intensity by a diffraction plane having a spacing of about 0.39 nm, where the CuKα X-ray diffraction angle is from 21.5° to 24° in parallel with the polyester film surface on the bottom portion;

of from 2.5 to 20, and a polyester (B) on the barrel portion of the can has a monoaxial orientation satisfying the following formula,

$$0.6<\cos^2\phi<0.95-\exp[-0.45I_A/I_B-1.1\epsilon+0.13]$$

wherein $\cos^2\phi$ is an index representing the degree of monoaxial orientation of the polyester film at a portion where the barrel portion is measured, and is given by the formula,

$$\cos^2\phi=\frac{\int_{-90°}^{+0°} I(\phi)\cos^2\phi\, d\phi}{\int_{-90°}^{+0°} I(\phi)\, d\phi}$$

wherein (Iϕ) is an X-ray diffraction intensity at an angle ϕ by a diffraction plane having a plane index of −105 and having a spacing of about 0.21 nm, where the CuKα X-ray diffraction angle of from 41° to 45° at right angles with the polyester film surface, ϕ is a value represents by the β-scanning angle of X-ray diffraction up to −90° presuming that the angle of structural inclination between a vector of a normal on the diffraction plane and the polyester fiber axis is zero with respect to the height direction of the can, I_A is a diffraction intensity by a diffraction plane having a spacing of about 0.34 nm, wherein the CuKα X-ray diffraction angle of from 24° to 28° in parallel with the polyester film surface on the bottom portion of the can, I_B is a diffraction intensity by a diffraction plane having a spacing of about 0.39 nm, where the CuKα X-ray diffraction angle of from 21.5° to 24° in parallel with the polyester film surface on the bottom portion of the can, and ε is a considerable strain by the processing of the laminated material at the can body measuring portion,

and that the thickness of the barrel portion is reduced by more than 30%.

5,700,530

ARTICLE AND METHOD FOR PROTECTING SUBSTRATES

Jozef Van Beersel, Temse, Belgium, assignor to NV Raychem SA, Kessel-Lo, Belgium

PCT No. PCT/GB94/02361, § 371 Date Apr. 25, 1996, § 102(e) Date Apr. 25, 1996, PCT Pub. No. WO95/12087, PCT Pub. Date May 4, 1995

PCT Filed Oct. 27, 1994, Ser. No. 635,932

Claims priority, application United Kingdom, Oct. 27, 1993, 9322092

Int. Cl.⁶ B32B *23/02;7/12*

U.S. Cl. 428—35.9 **9 Claims**

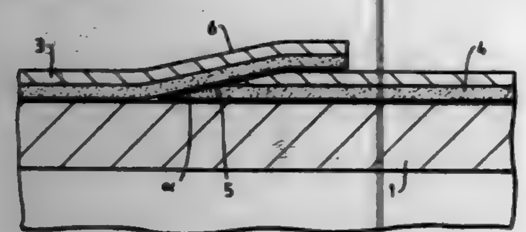

1. A tape for providing a protective covering to an elongate substrate by being wrapped around the substrate in an overlapping manner; wherein

(1) the tape comprises (a) a backing layer which (i) is formed from a polymetric material, and (ii) is heat-recoverable, and (b) an adhesive layer which is a heat-activatable adhesive;
(2) only one edge of the tape extending in the direction of wrapping is chamfered; and
(3) the angle of chamfer (a) extends through both the backing layer and the adhesive layer and (b) is no greater than 25°.

5,700,531

PULL-ACTIVATED CONTAINER

Gunilla Elsa Gillberg-LaForce, Roswell; Kevin George Hetzler, Alpharetta, and Rob Lee Jacobs, Woodstock, all of Ga., assignors to Kimberly-Clark Worldwide, Inc., Neenah, Wis.

Filed Nov. 17, 1995, Ser. No. 559,902

Int. Cl.⁶ B29D *22/00;* **B32B** *27/00*

U.S. Cl. 428—36.1 **12 Claims**

1. A pull-activated container adapted to hold a fluid, volatile solid, or absorbent for a fluid wherein at least a portion of the container comprises a laminate comprising a first layer, a second layer, a third layer, and a grasping means, in which:

the first layer is a fibrous sheet;
the second layer is a film having a first side and a second side;
the third layer is a fibrous sheet; and
the third layer is inside the container;

wherein:

the first layer is bonded to the first side of the second layer and has a first bonding strength;
the third layer is bonded to the second side of the second layer and has a second bonding strength which is such that the second layer may be removed from the third layer without tearing the third layer; and
the grasping means is affixed to the first or second layer and has an affixation strength which is greater than the second bonding strength.

5,700,532

STABLE SILICONE COATED FABRIC WITHOUT ADHESION PROMOTER

Joseph J. Chiou, Clemmons, N.C., assignor to Highland Industries, Inc., Greensboro, N.C.

Filed Nov. 17, 1995, Ser. No. 559,984

Int. Cl.⁶ B60R *21/20*

U.S. Cl. 428—36.1 **18 Claims**

1. A silicone coated fabric, comprising:

a) a fabric substrate; and
b) a layer of a silicone rubber cured and adhering to at least one surface of the fabric substrate, the rubber being a cured self-adhesive silicone rubber composition without organofunctional silane adhesion promoters, said composition comprising:
i) 100 parts by weight of an organopolysiloxane represented by the general formula

$$R_nSiO_{(4-n)/2}$$

wherein R is an unsubstituted or substituted monovalent hydrocarbon group and n is a positive number in the range from about 1.98 to 2.01, and having a viscosity of at least 300 centistokes at 25° C.;

ii) about 0.1 to about 20 parts by weight of an organohydrogenpolysiloxane resin having the general formula

$$M'Q$$

wherein M' is $R_2SiHO_{0.5}$, R is a monovalent hydrocarbon radical selected from the group consisting of lower alkyl and aryl radicals, and the group denoted by Q is SiO_2, a tetrafunctional unit;

iii) a platinum curing agent; and
iv) an organic peroxide curing agent.

5,700,533

FIBER BRAID MATERIAL

Chin-San You, No. 6, Lane 477, Sec. 2, Feng-Shyn Rd., Feng Yuan City, Taichung Hsien, Taiwan

Filed Oct. 5, 1995, Ser. No. 539,350

Int. Cl.⁶ D04C *1/00*

U.S. Cl. 428—36.3 **2 Claims**

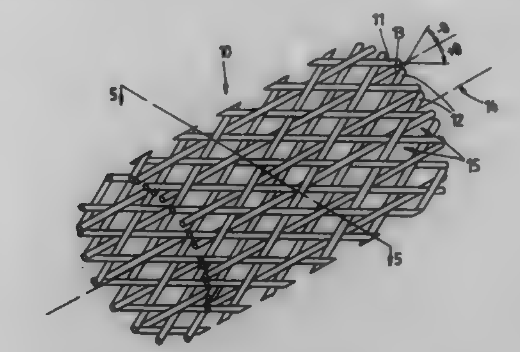

1. A fiber braid comprising:

at least a first fiber extending spirally along an imaginary axis such that said first fiber forms an angle with said imaginary axis;
at least a second fiber interlaced with said first fiber and extending spirally and coaxially with said first fiber such that said second fiber and said first fiber form a tubular network, with said imaginary axis serving as an axis of said tubular network, said tubular network comprising openings formed by interlacing the first fiber and the second fiber; and
at least a third fiber which is oriented in a direction parallel to said axis of said tubular network, wherein said third fiber is interlaced through the openings in said tubular network;
wherein said tubular network is united with a plurality of third fibers which are interlaced with said first fiber and said second fiber such that each said third fiber of said plurality of fibers is interlaced in the openings in the same manner as another said third fiber on an opposite side of said axis of said tubular network.

5,700,534

COLORING FLUID-CONTAINING MARKING DEVICE MADE OF BIODEGRADABLE PLASTIC RESIN

Masaki Shibazaki; Mikiya Ido, both of Aichi, and Tohru Watanabe, Tokyo, all of Japan, assignors to The Pilot Ink Co., Ltd., Nagoya, Japan

Filed Aug. 4, 1995, Ser. No. 511,150

Claims priority, application Japan, Aug. 11, 1994, 6-212171

Int. Cl.⁶ B43K *5/02*

U.S. Cl. 428—36.92 **7 Claims**

1. A marking device comprising a container containing a coloring fluid therein, said container being a molded article of a biodegradable aliphatic polyester, and said coloring fluid comprising a colorant, a liquid solvent mainly comprising a member selected from the group consisting of an aliphatic hydrocarbon having the formula C_nH_{2n+2}, wherein n is a positive integer, an alicyclic hydrocarbon and a mixture thereof, and a resin soluble in said solvent.

5,700,535

SHEET OF LABELS, METHOD OF PRODUCTION AND EQUIPMENT

Wolfgang Gaisterer, Munich; Andreas Schlegel, Otterfing, and Martin Utz, Munich, all of Germany, assignors to Zweckform Büro-Produkte GmbH, Oberlaindern/Valley, Germany

PCT No. PCT/EP94/00761, § 371 Date Feb. 8, 1995, § 102(e) Date Feb. 8, 1995, PCT Pub. No. WO94/20944, PCT Pub. Date Sep. 15, 1994

PCT Filed Mar. 11, 1994, Ser. No. 331,647

Claims priority, application Germany, Mar. 11, 1993, 43 07 749.8

Int. Cl.⁶ B31D *1/02;* **G09F** *3/02*

U.S. Cl. 428—40.1 **35 Claims**

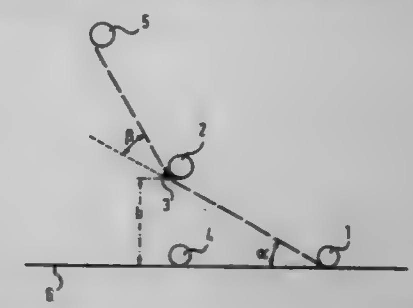

1. Sheet of labels comprising non-stick substrate material, intermediate contact adhesive and top material adhered to the substrate through the contact adhesive, wherein

surface area of the top material is smaller than the substrate material such that the substrate material edge projects over the top material edge on all sides, and
distance between the substrate material edge and top material edge amounts to 0.1 to 2.0 mm, and
said sheet constituting a single sheet of labels with the substrate material edge projecting over the top material edge on all sides thereof.

5,700,536

INTEGRATED LABEL, METHOD AND APPARATUS

Donald J. Steidinger, Barrington, Ill., assignor to Tamarack Products, Inc., Wauconda, Ill.

Filed Feb. 7, 1996, Ser. No. 597,852

Int. Cl.⁶ B32B *3/00*

U.S. Cl. 428—40.1 **21 Claims**

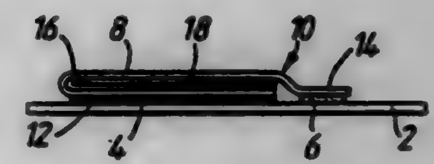

1. An integrated label assembly comprising:

a first ply having front and back surfaces,
a die cut in said first ply delineating a removable label portion,
a primary adhesive pattern on the back surface of said first ply substantially covering said label portion and extending beyond said label portion to define an adhesive pattern perimeter,
a release coated backer ply having a perimeter and covering said label portion and said primary adhesive pattern with a portion of said backer ply extending beyond said primary adhesive pattern perimeter to provide a margin between said adhesive pattern perimeter and said backer ply perimeter, and
a secondary adhesive pattern in said margin adhering said backer ply to said back surface of said first ply, and characterized in that the adhesion of said backer ply to said back surface of said first ply is different in said second adhesive pattern than in said first adhesive pattern.

5,700,537

LABELS AND MANUFACTURE THEREOF

David John Instance, Guinea Hall, Sellindge, Kent TN25 6EG, United Kingdom

Continuation of Ser. No. 982,731, Feb. 26, 1993, abandoned. This application Apr. 20, 1995, Ser. No. 425,454

Claims priority, application United Kingdom, Aug. 31, 1990, 9019030

Int. Cl.^{6} B32B *31/00;* **G09F** *3/02*

U.S. Cl. 428—41.9 **11 Claims**

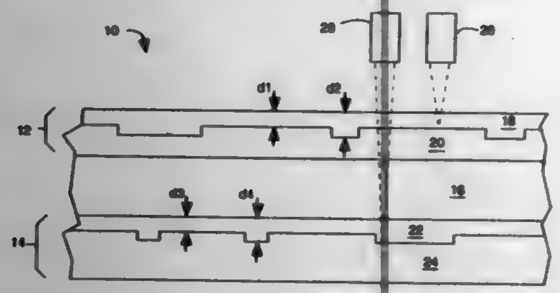

1. A self-adhesive label comprising a multilaminar folded label which comprises first and second portions which are adhered to a backing of release material by a first region of permanent adhesive and a second region of resealable adhesive respectively, the first portion comprising a rear panel of the folded label and the second portion comprising an overlapping flap of a front panel of the folded label, there being a first, folded edge between the front and rear panels,

said self-adhesive label further comprising a laminar material which covers the folded label and has a first edge region thereof which extends past the folded edge and is adhered to the backing of release material.

5,700,538

MINERAL FILLED EPDM MEMBRANE COMPOSITIONS WITH IMPROVED ADHESION PERFORMANCE

James A. Davis, Indianapolis, Ind.; Jeffrey W. Henegar, Kentwood, Mich., and William F. Barham, Jr., Prescott, Ark., assignors to Bridgestone/Firestone, Inc., Akron, Ohio

Division of Ser. No. 414,828, Mar. 31, 1995, abandoned. This application Sep. 5, 1996, Ser. No. 708,892

Int. Cl.^{6} B32B *7/12*

U.S. Cl. 428—57 **14 Claims**

1. A laminate seam of rubber sheet material for roofing having improved adhesion performance comprising:

two layers of vulcanizable elastomeric roof sheet material, one of said layers at least partially overlapping the other of said layers, said roof sheet material being prepared from a polymeric composition of matter having up to about 2 weight percent crystallinity comprising:

at least one polymer selected from the group consisting of polyolefins prepared from monomers containing at least 2 carbon atoms and mixtures thereof, said polymer having a crystallinity of up to about 2 percent by weight;

about 20 to 125 parts by weight of one or more non-black mineral fillers per 100 parts of said polymer;

about 50 to 110 parts by weight of one or more black-type fillers per 100 parts of said polymer;

from about 50 to 70 parts by weight of a processing material, per 100 parts of said polymer, said composition of matter being devoid of flame retardant rubber chemical additives, heavy metals, oxidants and halogen-containing polymers; and

a cure package; and

an adhesive, selected from the group consisting of neoprene-based and butyl-based adhesives, interposed between the area of overlapping of said layers, said layers of roof sheet material having improved peel adhesion to each other using said adhesive.

5,700,539

THIN FILM AND INTERFEROMETRIC OPTICAL DISK MEDIA AND MASS PRODUCTION METHOD FOR FABRICATING SUCH AND MULTI-LAYER GDS

Gilbert H. Hong, 12820 Alta Tierra, Los Altos Hills, Calif. 94022

Division of Ser. No. 515,031, Aug. 14, 1995, Pat. No. 5,635,114. This application May 1, 1996, Ser. No. 644,615

Int. Cl.^{6} B32B *3/00*

U.S. Cl. 428—64.1 **13 Claims**

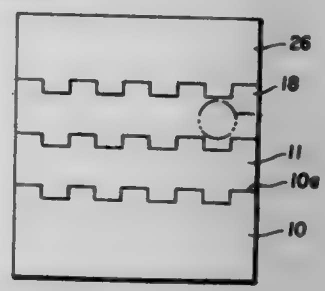

1. An optical storage media, comprising:

a first plastic film layer having a first thickness "d1" and a second thickness "d2" that are substantially different fractions of the wavelength of a laser light;

wherein said thickness "d1" represents the storage of a digital one value and said thickness "d2" represents a digital zero value; and

wherein, an interferometric effect of light is used to respectively induce different constructive and destructive amplitude sums of laser light wavefronts in said media in said first thickness "d1" and said second thickness "d2" to extract recorded information.

5,700,540

OPTICAL RECORDING MEDIUM

Giuseppe Farruggia, Webster; Tukaram K. Hatwar, Penfield, and Michael P. Cunningham, Rochester, all of N.Y., assignors to Eastman Kodak Company, Rochester, N.Y.

Filed Jul. 24, 1996, Ser. No. 686,093

Int. Cl.^{6} B52B *3/00*

U.S. Cl. 428—641 **12 Claims**

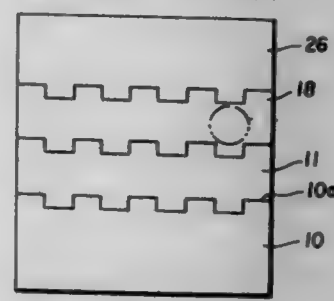

1. An optical recording medium comprising:

a) a substrate with grooves;

b) a surface smoothing layer less than 1 μm thick deposited on the grooved substrate wherein the said surface smoothing layer includes monomers selected from the group consisting of:

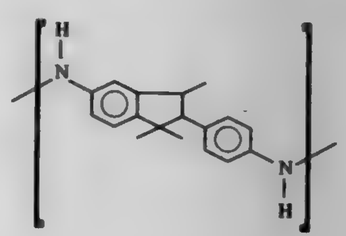

-continued

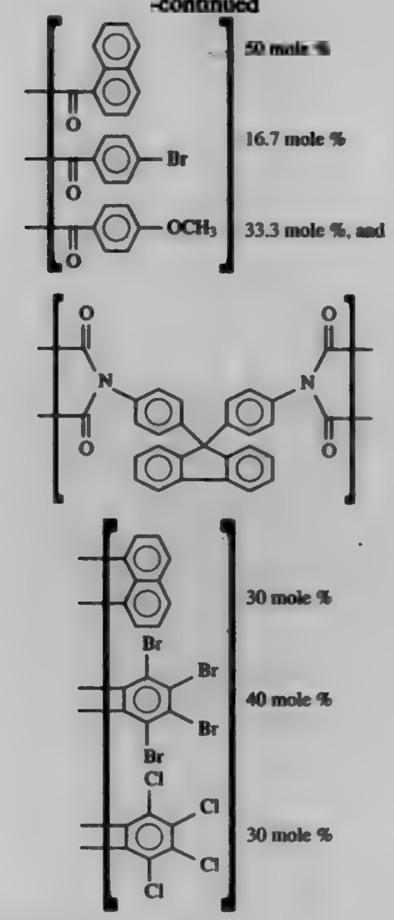

, and

c) a recording layer.

5,700,541

MAGNETIC RECORDING MEDIUM

Tsutomu Okita, and Toshio Ishida, both of Kanagawa, Japan, assignors to Fuji Photo Film Co., Ltd., Japan

Filed Dec. 12, 1995, Ser. No. 571,068

Claims priority, application Japan, Dec. 13, 1994, 6-332172

Int. Cl.^{6} G11B *5/71*

U.S. Cl. 428—65.4 **7 Claims**

1. A magnetic recording medium comprising a nonmagnetic support having provided thereon a lower layer comprising nonmagnetic or ferromagnetic particles and a binder resin, and an upper layer provided on the lower layer comprising ferromagnetic metal particles and a binder resin, wherein both said lower layer and said upper layer contains as a lubricant a compound represented by the following formula (1) in an amount in said upper layer of 1% by weight or more based on the amount of the ferromagnetic metal particles contained in said upper layer:

$$R^1—COO—R—OCO—R^2 \qquad (1)$$

wherein R is selected from the group consisting of a residue of a linear saturated diol containing from 1 to 10 carbon atoms, a residue of a branched saturated diol containing from 1 to 10 carbon atoms, and a residue of a linear unsaturated diol containing from 1 to 10 carbon atoms, or R represents

$$—(CH_2\underset{\displaystyle CH_3}{\underset{|}{C}H})—$$

and R^1 and R^2 are the same or different and each represents a chain unsaturated hydrocarbon group having from 12 to 26 carbon atoms.

5,700,542

METAL PART WITH COVERING AND METHOD OF ITS MANUFACTURE

Gerhard Pirchl, Seestrasse 341, CH-6708 Birrwil, Switzerland

Filed Jun. 5, 1995, Ser. No. 461,894

Claims priority, application Germany, Jun. 8, 1994, 44 19 994.5

Int. Cl.^{6} B32B *1/04;* **B21D** *31/00*

U.S. Cl. 428—68 **6 Claims**

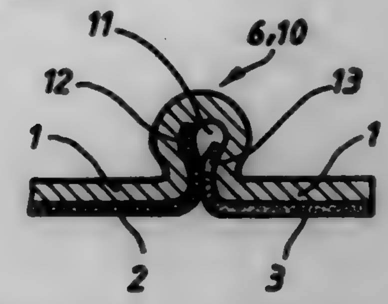

1. A planar object with a covering, comprising:

a metal panel; a channel formed into a first side of the metal panel, the channel having sidewalls with a neck portion adjacent to the second side; and a first and a second piece of material attached to the first side of the metal panel, the first and second pieces of material having adjacent peripheral edges located within said channel; said sidewalls at the neck portion of said channel being crimped together on a second side of the metal panel so that the adjacent peripheral edges of the pieces of material are clamped to each other between the sidewalls to secure the first and second pieces of material to each other.

5,700,543

ELONGATE COMPOSITE STRUCTURAL MEMBER AND METHOD OF MAKING

Harry J. Bendick, 182 Carmarthen Way, Granville, Ohio 43023, and Bret M. Kraner, 106 Maple St., Hebron, Ohio 43025

Continuation of Ser. No. 274,491, Jul. 13, 1994, Pat. No. 5,529,839. This application Jan. 16, 1996, Ser. No. 585,721

Int. Cl.^{6} B32B *3/26;5/18;5/20*

U.S. Cl. 428—71 **2 Claims**

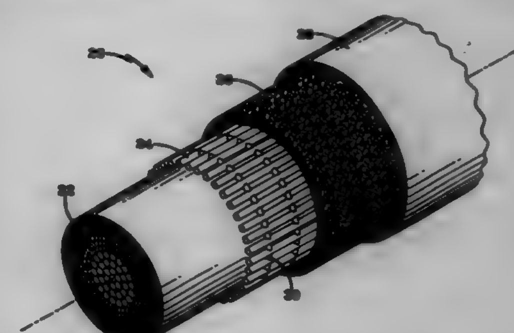

1. An elongate structural element, comprising in combination:

a) an elongate compression molded core comprising an expanded resin foam material, said core having a generally cylindrical cross-sectional configuration;

b) a tubular layer surrounding said core including at least one sheet of longitudinally extending fibers disposed along the length of said core and having said expanded resin foam material forming said core extending into and through said tubular layer of longitudinally extending fibers, said longitudinally extending fibers being selected from the group consisting of fiber glass, graphite and boron;

c) said expanded resin foam material extending through said tubular layer of longitudinal extending fibers forming an outer

skin layer overlying said tubular layer of longitudinally extending fibers to intimately bind said core, said longitudinally extending fiber layer, and said outer skin into an integral composite structure.

5,700,544
PROTECTIVE COVERS WITH WATER AND AIR IMPENETRABLE SEAMS
Brent I. Goodwin, Elkton, Md., and Francis J. Masley, Wilmington, Del., assignors to W. L. Gore & Associates, Inc., Newark, Del.
Continuation-in-part of Ser. No. 396,308, Feb. 28, 1995, Pat. No. 5,569,507. This application Jun. 14, 1995, Ser. No. 490,155
Int. Cl.[6] B32B *1/04*
U.S. Cl. 428—76 15 Claims

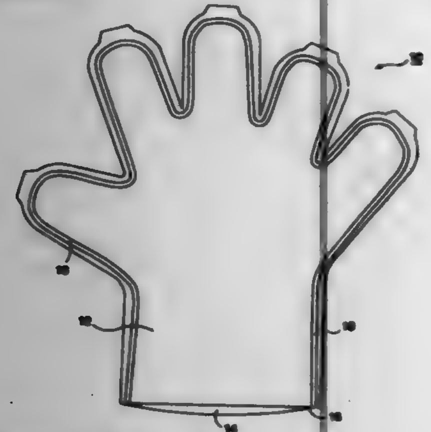

1. A protective cover comprising
laminate material including at least one layer of breathable and liquid resistant sheet material and at least one layer of fibrous material to which the sheet material is affixed, and including a first segment of laminate material and a second segment of laminate material;
at least one seam joining the first and second segments of the laminate material together, the laminate material oriented to adjoin a layer of fibrous material from the first segment to the layer of fibrous material from the second segment;
wherein the seam comprises a continuous layer of adhesive applied between the first and second segments of the laminate material, the adhesive fully penetrating through each layer of fibrous material to the affixed layer of the sheet material;
wherein the adhesive fully encapsulates fibers in the fibrous material layer; and
wherein any voids present in a cross-section of the seam measure less than 10 micron across.

5,700,545
ENERGY ABSORBING STRUCTURE
Richard Francois Audi, Dearborn; Donald Scott Smith, Commerce Township; Phillip Patrick Carroll, III, Bloomfield Hills, and Michael Anthony Rossi, Allen Park, all of Mich., assignors to The Oakwood Group, Dearborn, Mich.
Filed May 31, 1995, Ser. No. 456,079
Int. Cl.[6] B32B *3/10*
U.S. Cl. 428—131 16 Claims

1. An energy absorbing structure for decelerating an object that impacts the structure, comprising:
an incident surface that meets the impacting object;
a basal surface that contacts a member to be protected and is located in spaced relation to the incident surface;
at least one energy absorbing member located between the incident and basal surfaces for supporting deformation of the structure, the energy absorbing member including a planar

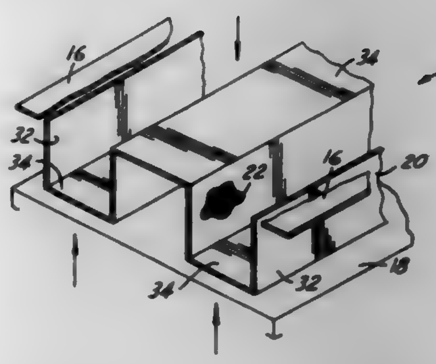

stranded structure of expanded metal that collapses during energy absorption and is oriented substantially perpendicular to the incident surface to maximize energy absorption in a given distance, wherein the stranded structure comprises an array of interconnected strands of metal, the strands intersecting to define a plurality of apertures between the strands before deformation, the strands becoming coalesced and the apertures becoming closed during energy absorption.

5,700,546
SEAL OR BEARING
Kanenaga Fujii; Masato Kiuchi, both of Osaka; Hiroshi Nagasaka; Yoshikazu Kimura, both of Kanagawa-ken, and Naoki Tsuchiya, Tokyo, all of Japan, assignors to Ebara Corporation, and Agency Of Industrial Science and Technology, both of Tokyo, Japan
Filed May 30, 1995, Ser. No. 453,004
Claims priority, application Japan, May 30, 1994, 6-139431; May 26, 1995, 7-128408
Int. Cl.[6] F16J *15/44*
U.S. Cl. 428—156 10 Claims

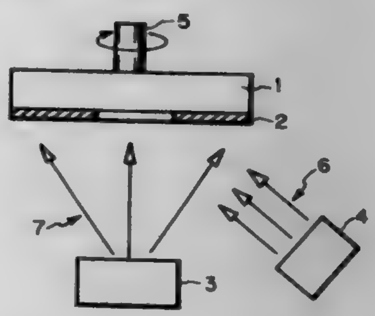

1. A seal or bearing comprising a combination of a movable member and a stationary member, either one of said movable and stationary members being made of a low thermal expansion coefficient material, and the other being made of a carbon containing material,
wherein a thin titanium nitride film is formed on a sliding surface of said movable or stationary member which is made of said low thermal expansion coefficient material, said titanium nitride film having a Vickers hardness of 2500 or more.

5,700,547
SLIDING BEARING
Makoto Shibata, and Masao Takahashi, both of Toyota, Japan, assignors to Taiho Kogyo Co., Ltd., Aichi, Japan
PCT No. PCT/JP95/00469, § 371 Date Nov. 16, 1995, § 102(e) Date Nov. 16, 1995, PCT Pub. No. WO95/25906, PCT Pub. Date Sep. 28, 1995
PCT Filed Mar. 17, 1995, Ser. No. 553,583
Claims priority, application Japan, Mar. 18, 1994, 6-073965
Int. Cl.[6] B32B *3/28;* F16C *32/06*
U.S. Cl. 428—167 5 Claims

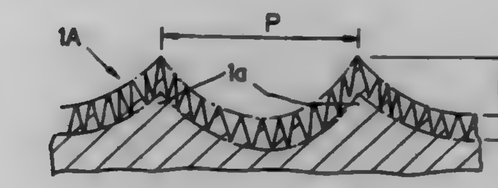

1. A sliding bearing having a plurality of annular projections formed to a given height around a sliding surface; characterized in that a surface roughness of the sliding surface, including the surface of the annular projections, is chosen to be equal to or less than one-half the height of the annular projections.

5,700,548
MULTILAYER FILM, MULTICOLOUR SCREEN-PRINTING PROCESS FOR THE MANUFACTURE OF SAID MULTILAYER FILM AND THE USE OF SAME
Jacques Warnier, Eysden; Gerrit Van Der Beek, Heerlen, and Hubertus Weerts, Landgraaf, all of Netherlands, assignors to U.S. Philips Corporation, New York, N.Y.
Continuation of Ser. No. 556,299, Oct. 23, 1995, abandoned, which is a continuation of Ser. No. 318,419, Oct. 5, 1994, abandoned. This application Feb. 6, 1997, Ser. No. 796,406
Claims priority, application Germany, Oct. 6, 1993, 43 34 059.8
Int. Cl.[6] B32B *3/00*
U.S. Cl. 428—209 8 Claims

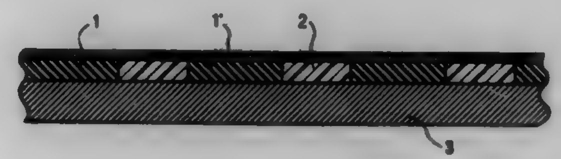

1. A multilayer film having a multilayer structure, in particular for passive electronic components, said multilayer film comprising a multilayer structure, wherein each layer is of uniform thickness, of:
a) a green ceramic substrate film comprising at least one ceramic component and a first binder preparation for said at least one ceramic component,
b) inner electrodes provided on a surface of said substrate film by screen printing, each of said electrodes comprising at least one metallic component and, optionally, both ceramic filling agents and a second binder preparation for said ceramic filing agents, and
c) at least one leveling layer comprising one or more ceramic components and a third binder preparation for said at least one ceramic component provided by screen printing in a manner so as to completely cover said inner electrodes and evenly fill up the interstices between the inner electrodes to thereby completely cover said surface of said substrate film.

5,700,549
STRUCTURE TO REDUCE STRESS IN MULTILAYER CERAMIC SUBSTRATES
John J. Garant, Hopewell Junction, and Richard F. Indyk, Wappingers Falls, both of N.Y., assignors to International Business Machines Corporation, Armonk, N.Y.
Filed Jun. 24, 1996, Ser. No. 668,668
Int. Cl.[6] B32B *3/00;* H05K *7/20*
U.S. Cl. 428—210 10 Claims

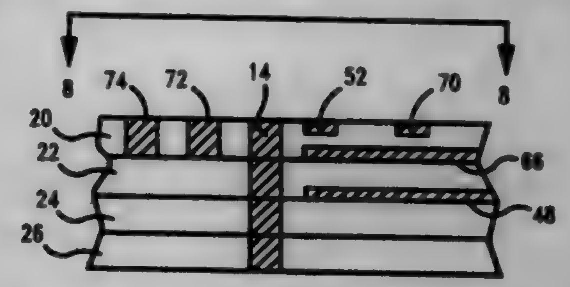

1. A multilayer ceramic substrate for microelectronics comprising:
a plurality of ceramic layers arranged in sequential layers, each layer having a major surface;
a plurality of electrically conductive wires formed on the major surfaces of the ceramic layers;
a plurality of electrically conductive functional vias, each functional via extending through one or more of the ceramic layers and electrically connecting to one or more of the wires; and
a plurality of stress relief pads formed on the major surface of at least one of the ceramic layers in the vicinity of selected ones of the functional vias, the stress relief pads reducing stress formed in the at least one of the ceramic layers during ceramic sintering manufacturing steps as a result of thermal coefficient of expansion differences between the selected ones of the functional vias and the ceramic substrate.

5,700,550
TRANSPARENT HOLOGRAM SEAL
Haruo Uyama, Tokyo; Takahiro Harada, Satte; Mitsuru Kano, Tokyo; Nagahisa Matsudaira, Kasukabe; Kazuhisa Hoshino, Chiba; Satoshi Kitamura, Tamana; Fumitoshi Noguchi, Kumamoto, and Tsutomu Shikakubo, Shiki, all of Japan, assignors to Toppan Printing Co., Ltd., Tokyo, Japan
Filed Dec. 22, 1994, Ser. No. 361,370
Claims priority, application Japan, Dec. 27, 1993, 5-333541; Dec. 27, 1993, 5-333543; Dec. 27, 1993, 5-333544
Int. Cl.[6] G06K *19/16*
U.S. Cl. 428—212 15 Claims

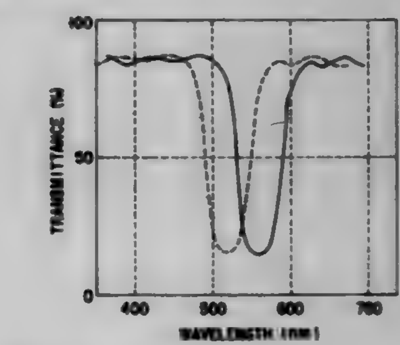

1. A laminate body comprising:
a reflective base member; and
a transparent layer formed on a portion of said base member such that a pattern is formed by contrast between the portion having the transparent layer formed thereon and a remainder portion, the transparent layer having a laminated structure of first and second ceramic materials having different refractive

indices, the first and second ceramic materials being laminated by an evaporation method,
the transparent layer selectively absorbing incident light rays such that a peak wavelength of absorption is shifted in an amount which depends on an angle of incidence of incident light rays,
the selective absorption causing light emitted from the laminated body to have a color which varies depending on the angle of incidence of incident light rays, the color variation being detectable by an optical instrument.

5,700,551
LAYERED FILM MADE OF ULTRAFINE PARTICLES AND A HARD COMPOSITE MATERIAL FOR TOOLS POSSESSING THE FILM
Satoru Kukino; Tetsuo Nakai; Mitsuhiro Goto; Takashi Yoshioka, and Makoto Setoyama, all of Hyogo, Japan, assignors to Sumitomo Electric Industries, Ltd., Osaka, Japan
Filed Sep. 18, 1995, Ser. No. 529,840
Claims priority, application Japan, Sep. 16, 1994, 6-248503
Int. Cl.[6] C23C *14/06;* **B23B** *27/00*
U.S. Cl. 428—212 **31 Claims**

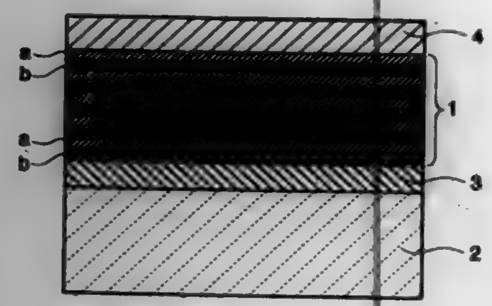

1. Ultrafine particle-layered film, wherein said film has more than two layers made of ultrafine particles of a different compound consisting mainly of a carbide, nitride, carbonitride, or oxide of at least one element selected from a group consisting of IVa group elements, Va group elements, VIa group elements, Al, Si, and B.

5,700,552
PRESSURE-SENSITIVE CORRECTION TAPE
Noboru Katsuro; Toshiro Suemoto; Yoshihiro Mizutani, and Masami Shiai, all of Osaka, Japan, assignors to Fujicopian Co., Ltd., Japan
Filed Apr. 5, 1996, Ser. No. 628,290
Claims priority, application Japan, Apr. 7, 1995, 7-082585
Int. Cl.[6] C09J *7/02*
U.S. Cl. 428—214 **3 Claims**

1. A pressure-sensitive correction tape comprising:
a foundation tape; and
a pressure-sensitive transfer layer for masking-correction formed on one side of the foundation tape;
the pressure-sensitive transfer layer comprising a masking layer containing a pigment and a vehicle, and a pressure-sensitive adhesive layer formed on a surface of the masking layer;
wherein the pressure-sensitive adhesive layer has a thickness of 0.8 μm to 1.6 μm; and
wherein a thickness ratio between the pressure-sensitive adhesive layer and the masking layer is 1:14 to 1:35.

5,700,553
MULTILAYER HYDRODISINTEGRATABLE FILM
Bernard Cohen, Berkeley Lake; Lee Kirby Jameson, Roswell; Lamar Heath Gipson, Acworth, and Judith Katherine Faass, Dawsonville, all of Ga., assignors to Kimberly-Clark Corporation, Neenah, Wis.
Filed Nov. 16, 1995, Ser. No. 558,404
Int. Cl.[6] A61F *13/15*
U.S. Cl. 428—220 **26 Claims**

1. A multilayer film having an average thickness of less than about 50 mils, the film comprising:
a hydrodisintegratable first surface layer film comprising:
from about 7.5 to about 85 weight percent of a water dispersible polymer;
from about 7.5 to about 85 weight percent of a xerogellant; and
from about 7.5 to about 20 weight percent of a plasticizing agent; and
a substantially water impermeable second surface layer film comprising no more than 5% of the thickness of the multilayer film.

5,700,554
PACKAGING ARTICLES SUITABLE FOR SCAVENGING OXYGEN
Drew V. Speer; William P. Roberts, both of Columbia; Charles R. Morgan, Brookeville, and Cynthia L. Ebner, Mt. Airy, all of Md., assignors to W. R. Grace & Co.-Conn., New York, N.Y.
Continuation of Ser. No. 268,047, Jun. 28, 1994, abandoned, which is a division of Ser. No. 52,851, Apr. 23, 1993, Pat. No. 5,346,644, which is a continuation-in-part of Ser. No. 679,419, Apr. 2, 1991, abandoned. This application Dec. 6, 1995, Ser. No. 568,329
Int. Cl.[6] B32B *27/18;25/00;* **B29D** *22/00;* **C09K** *15/02*
U.S. Cl. 428—220 **28 Claims**

1. An article for packaging an oxygen-sensitive product, which article in use envelops the product and comprises a layer suitable for scavenging oxygen comprising an oxygen scavenging component consisting essentially of
(a) an ethylenically unsaturated hydrocarbon polymer having a molecular weight of at least 1,000 and
(b) 10–10,000 parts per million based on component (a) of transition metal atom of a transition metal salt; wherein the rate of oxygen scavenging of the layer at 25° C. and one atmosphere of air is at least 1 cc oxygen per square meter per day and the scavenging capacity is at least 250 cc oxygen per square meter per mil thickness of the layer, and wherein scavenging occurs during the storage of the product in the package.

5,700,555
SANDABLE AND STAINABLE PLASTIC/WOOD COMPOSITE
Otto Grill, Independence, Ohio, assignor to Formtech Enterprises, Inc., Stow, Ohio
Filed Aug. 30, 1993, Ser. No. 113,989
Int. Cl.[6] B32B *5/06;17/02;27/36*
U.S. Cl. 428—233 **16 Claims**

1. A composite article of manufacture comprising:
a first zone, said first zone being comprised of a first plastic; and
a second zone, said second zone being comprised of
a second plastic, and
a natural cellulose-containing fiber,
a paraffin or hydrocarbon wax blend metal release agent to control the porosity of said second zone having an outer surface, said outer surface being porous to hold and retain wood stain or paint; and
an oxidized polyethylene fusion enhancer to form a homogeneous melt of the natural cellulose-containing fiber and the

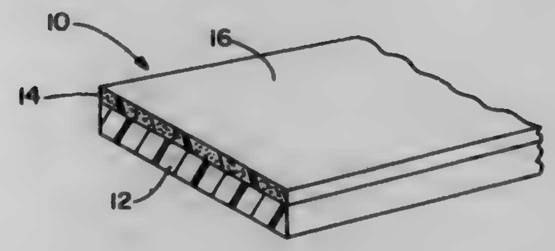

second plastic and modifies the effect of the porosity aid which deters fusion, yet retains the porosity of the second zone; and
said first and second zones being integral and being coextruded together.

5,700,556
GRANULES OF FIBER-REINFORCED THERMOPLASTIC
Horst Heckel, Darmstadt; Detlef Skaletz, Mainz; Bruno Wagner, Brechen, and Joachim Heydweiller, Rüsselsheim, all of Germany, assignors to Hoechst Aktiengesellschaft, Frankfurt, Germany
Continuation of Ser. No. 198,153, Feb. 17, 1994, abandoned. This application Jun. 7, 1995, Ser. No. 476,067
Claims priority, application Germany, Feb. 19, 1993, 9302401 U
Int. Cl.[6] B32B *5/06*
U.S. Cl. 428—297.4 **19 Claims**

1. A granule composed of fiber-reinforced thermoplastic material, in which a multiplicity of individual reinforcing fibers are arranged in parallel in a matrix of the thermoplastic material, and the fiber length corresponds to the granule length and is in the range from 3 mm to 8 mm, the reinforcing fibers having been wetted in a pultrusion process with a thermoplastic melt wherein the melt viscosity of the thermoplastic material is above 100 Pa.s at processing temperature, the diameter of the granule (measured perpendicular to the fiber direction) is 1.7 to 5 mm and the ratio diameter:length of the granule is 0.4 to 1.66.

5,700,557
UNSATURATED POLYESTER AND THE MANUFACTURING METHOD THEREOF
Li-Ching Lin, No. 57, Lane 131, Haipu Road, Hsinchu, Taiwan
Filed Dec. 5, 1996, Ser. No. 760,475
Int. Cl.[6] B32B *3/26;* **C08K** *3/00*
U.S. Cl. 428—312.4 **10 Claims**

1. An unsaturated polyester composition consisting essentially of:
an unsaturated polyester resin;
cement;
sand;
a bleaching agent; and
a curing agent.

5,700,558
HYDROCARBON ABSORBENT
Alvin F. Bopp, 5828 Chatham Dr., New Orleans, La. 70122
Filed Dec. 8, 1995, Ser. No. 569,978
Int. Cl.[6] B32B *3/26;5/16*
U.S. Cl. 428—316.6 **9 Claims**

1. An absorbent material comprising:
a mixture of granulated foam, microbial nutrient, de-dust agent and ground cellulosic material, wherein;
the granulated foam is selected from the group consisting of urea-formaldehyde foam and polyurethane foam,
the absorbent material is about 6% to about 15% by weight granulated foam,
the absorbent material is about 0.1% to 1% by weight microbial nutrient,
the microbial nutrient is a composite material for promoting growth of hydrocarbon degrading microorganisms, comprising:
a core having water soluble, microbial available nutrients, wherein said nutrients include nitrogen in the form of an ammonium compound, phosphorous in the form of a microbial available phosphate compound, and iron in a form of microbial available iron compound; and
a sacrificial oleophilic, lipophilic, partially oil soluble and biodegradable coating having a saturated fatty acid and an unsaturated fatty acid, wherein said coating encapsulates said core, and the absorbent material is about 79% to 93% by weight cellulosic material.

5,700,559
DURABLE HYDROPHILIC SURFACE COATINGS
Min-Shyan Sheu, Lowell, and Ih-Houng Loh, Lexington, both of Mass., assignors to Advanced Surface Technology, Billerica, Mass.
Filed Dec. 16, 1994, Ser. No. 357,415
Int. Cl.[6] B32B *5/22*
U.S. Cl. 428—319.7 **14 Claims**

1. A hydrophilic article for use in aqueous environments, comprising
a porous substrate;
an ionic polymeric layer on said substrate; and
a disordered polyelectrolyte coating ionically bonded to said polymeric layer;
wherein said porous substrate has a surface with pores of an average diameter between 0.01 microns and 1 mm, or is made of perforated material.

5,700,560
GAS BARRIER RESIN COMPOSITION AND ITS FILM AND PROCESS FOR PRODUCING THE SAME
Kozo Kotani, Toyonaka; Toshio Kawakita, Ibaraki; Taiichi Sakaya, and Toshiya Kuroda, both of Takatsuki, all of Japan, assignors to Sumitomo Chemical Company, Limited, Osaka, Japan
Continuation-in-part of Ser. No. 384,798, Feb. 6, 1995, abandoned, which is a continuation of Ser. No. 97,889, Jul. 28, 1993, abandoned. This application Apr. 4, 1995, Ser. No. 416,380
Claims priority, application Japan, Jul. 29, 1992, 4-202339
Int. Cl.[6] B32B *5/16*
U.S. Cl. 428—325 **18 Claims**

1. A resin composition comprising a high hydrogen-bonding resin containing from 20 wt % to 60 wt % of a hydrogen-bonding group or ionic group based on a total weight of the hydrogen-bonding resin, and a non-film-forming clay mineral having a swellability, the resin composition having a volume ratio of the clay mineral to the hydrogen-bonding resin in the range of 5:95 to 90:10, wherein the clay mineral has an aspect ratio of in a range of from 50 to 5000.

5,700,561

CHROMATED METAL SHEET HAVING HIGH CORROSION RESISTANCE WITH IMPROVED LUBRICITY AND ELECTRIC CONDUCTIVITY

Junichi Mano; Youzou Ogawa, both of Tokyo; Masaki Mabuchi, Chiba; Keizou Okuno, Chiba, and Nobuo Totsuka, Chiba, all of Japan, assignors to Kawasaki Steel Corporation, Japan

Continuation of Ser. No. 183,514, Jan. 18, 1994, abandoned. This application Nov. 16, 1995, Ser. No. 558,346

Claims priority, application Japan, Jul. 29, 1993, 5-187924

Int. Cl.^{6} B32B *9/00*

U.S. Cl. 428—327 **16 Claims**

1. A chromated metal sheet that has high corrosion resistance along with improved lubricity and electrical conductivity, comprising: a chromate layer on at least one surface of a metal substrate or a plated metal substrate,

wherein said chromate layer has a chromium deposit in the range of 10–200 mg/m^2 per surface in terms of metallic Cr,

wherein said chromate layer contains silica in a weight ratio of 0.1–6.0 of SiO_2 to Cr and lubricating particles selected from the group consisting of graphite, MoS_2, BN, calcium stearate and an organic lubricating substance, said lubricating particles being present in a weight ratio of 0.1–100 of the lubricating particles to Cr, and wherein the coverage of the surface of said metal substrate with said lubricating particles is less than 50%.

5,700,562

FLEXIBLE PRINTED CIRCUIT AND MANUFACTURING METHOD THEREFOR

Toshihiko Sugimoto; Chiharu Miyaake, and Yousuke Miki, all of Osaka, Japan, assignors to Nitto Denko Corporation, Osaka, Japan

Filed Aug. 23, 1996, Ser. No. 701,954

Claims priority, application Japan, Aug. 24, 1995, 7-216069; Sep. 26, 1995, 7-247774; Nov. 9, 1995, 7-291346; Jan. 9, 1996, 8-001758

Int. Cl.^{6} B32B *5/16;3/00;* **H05K** *1/00*

U.S. Cl. 428—327 **33 Claims**

1. A composite sheet comprising:

a first resin film having a first linear expansion coefficient ellipse defined by a pair of first polar coordinate axes and a first base point located at an intersection of the first axes; and

a second resin film having a second linear expansion coefficient ellipse defined by a second pair of polar coordinate axes and a second base point located at an intersection of the second axes;

the second resin film being laminated on the first resin film such that the second ellipse overlaps the first ellipse with the first axes coinciding with the second axes and the first base point coinciding with the second base point;

wherein the first and second linear expansion coefficient ellipses are a set of distances from the first and second base points, respectively, representing magnitudes of linear expansion coefficients of the first and second resin films, respectively, in directions having a measurement angle θ with respect to one of the first axes and the corresponding one of the second axes, respectively; and

wherein a maximum difference between a linear expansion coefficient having the measurement angle θ of the first resin film and a linear expansion coefficient having the measurement angle θ of the second resin film is equal to or less than 1.4×10^{-5} (1/° C.).

5,700,563

MAGNETIC RECORDING MEDIUM

Kazushige Goto, and Takahiro Miyazaki, both of Miyagi, Japan, assignors to Sony Corporation, Tokyo, Japan

Filed Jan. 29, 1997, Ser. No. 790,427

Claims priority, application Japan, Jan. 31, 1996, P08-015966

Int. Cl.^{6} B32B *5/16*

U.S. Cl. 428—328 **2 Claims**

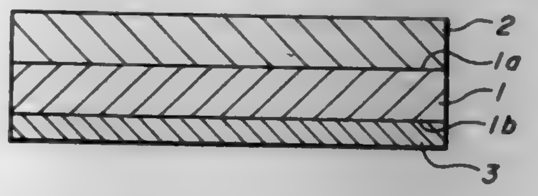

1. A magnetic recording medium comprising:

a magnetic layer formed by coating a non-magnetic support member with a magnetic coating material mainly composed of ferromagnetic iron alloy powder and a binding material, wherein

said magnetic coating material includes

ferromagnetic iron alloy powder containing Co by 6 to 30 atom %, Y by 1 to 6 atom % and Al by 10 to 15 atom % with respect to Fe and having an average major axis length of 0.06 μm to 0.20 μm,

polyvalent carboxylic acid having a molecular weight of 300 or less or an anhydride of said polyvalent carboxylic acid,

a binding material and

a lubricant, and

the maxim diameter of pores in said magnetic layer is 10 nm to 30 nm.

5,700,564

COMPOSITE FACESTOCKS

Melvin S. Freedman, Beachwood, Ohio, assignor to Avery Dennison Corporation, Pasadena, Calif.

Continuation of Ser. No. 255,571, Jun. 8, 1994, abandoned, which is a continuation of Ser. No. 937,066, Aug. 26, 1992, abandoned, which is a continuation of Ser. No. 758,385, Sep. 3, 1991, Pat. No. 5,143,570, which is a continuation of Ser. No. 322,720, Mar. 13, 1989, abandoned, which is a division of Ser. No. 88,402, Aug. 24, 1987, Pat. No. 4,888,075, which is a division of Ser. No. 853,772, Apr. 18, 1986, Pat. No. 4,713,273, which is a continuation-in-part of Ser. No. 699,204, Feb. 5, 1985, abandoned. This application May 12, 1995, Ser. No. 439,690

Int. Cl.^{6} B32B *27/00*

U.S. Cl. 428—332 **17 Claims**

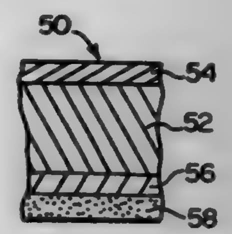

1. A multilayer film facestock having an overall thickness of from 0.5 mil to about 6.5 mils for use in pressure-sensitive adhesive label applications comprising a coextrudate of at least two layers comprising a base layer and at least one skin layer wherein the base layer is thicker than the skin layer, said coextrudate having a face side, said base layer comprising a polymeric film material having a stiffness of from about 10 to 100 Gurley and said skin layer being on the face side of the coextrudate and having an ink-printable surface.

5,700,565

COMPOSITE MAGNETO-OPTICAL INFORMATION RECORDING MEDIA

Tooru Kitaguchi, and Mikio Yoneda, both of Himeji, Japan, assignors to Daicel Chemical Industries, Ltd., Osaka, Japan

Continuation of Ser. No. 371,459, Jan. 11, 1995, abandoned, which is a continuation of Ser. No. 118,091, Sep. 8, 1993, abandoned, which is a continuation of Ser. No. 576,025, Aug. 31, 1990, abandoned. This application Sep. 21, 1995, Ser. No. 532,006

Claims priority, application Japan, Aug. 31, 1989, 1-224900

Int. Cl.^{6} G11B *5/66*

U.S. Cl. 428—332 **9 Claims**

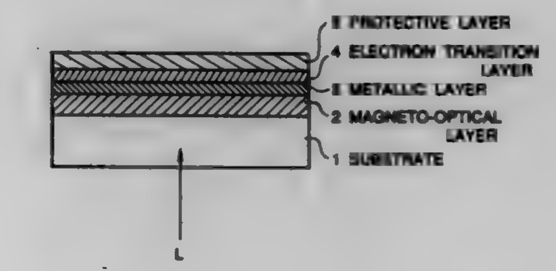

1. A composite magneto-optical information recording medium comprising a substrate and a composite magneto-optical recording layer deposited on said substrate, in which information is written in or read from said composite magneto-optical recording layer by a laser beam that impinges onto said substrate, said composite magneto-optical recording layer comprising a magneto-optical layer directly deposited on said substrate, a metallic layer having a thickness of less than 200 Å deposited on said magneto-optical layer, and an electron transition layer deposited on said metallic layer and which exhibits an electron transition in the wavelength range of said laser beam from the visible zone to the infra-red zone.

5,700,566

HEAT RESISTANT COMPOSITE LAMINATE

Michael Müller, Bensheim; Volker Benz, Höchst; Uwe Numrich, Weiterstadt; Horst Pühler, Mühltal, and Wilhelm Wopker, Bickenbach, all of Germany, assignors to Roehm GmbH Chemische Fabrik, Darmstadt, Germany

Filed Oct. 11, 1995, Ser. No. 540,766

Claims priority, application Germany, Oct. 12, 1994, 44 36 381.8

Int. Cl.^{6} B32B *27/08;* **A47K** *3/02*

U.S. Cl. 428—332 **19 Claims**

1. A composite suitable for the production of articles, said composite comprising a layer A, said layer A having a non-laminated outer surface which comes into contact with water exhibiting temperatures between 0° and 90° C., said composite comprising:

i) layer A consisting essentially of a thermoplastic, impact-resistant polymethyl methacrylate plastic comprising a core-shell structure, having a Vicat softening temperature of at least 95° C. according to ISO 306 procedure B and a notch impact resistance of at least 3.0 kJm^{-2}, according to ISO 180 1A; and

ii) layer C, an impact-resistant acrylonitrile styrene copolymer.

5,700,567

MAGNETO-OPTICAL RECORDING MEDIUM

Hajime Utsunomiya, Nagano, Japan, assignor to TDK Corporation, Tokyo, Japan

Continuation of Ser. No. 847,702, Mar. 9, 1992, abandoned. This application Nov. 16, 1995, Ser. No. 558,419

Claims priority, application Japan, Mar. 14, 1991, 3-104975; Jan. 30, 1992, 4-040277

Int. Cl.^{6} G11B *5/66*

U.S. Cl. 428—332 **9 Claims**

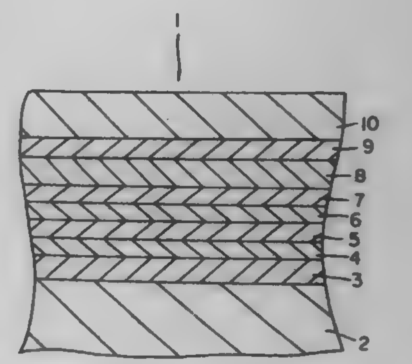

1. A magneto-optical recording medium comprising a first dielectric layer, a recording layer, a second dielectric layer, and a metal reflective layer stacked on a substrate in the described order,

said second dielectric layer consisting essentially of at least one oxide of La and Ce, silicon oxide and silicon nitride,

said first dielectric layer consisting essentially of silicon nitride, and

said metal reflective layer consisting essentially of an aluminum alloy containing nickel.

5,700,568

FLUOROELASTOMER MEMBERS

Santokh S. Badesha, Pittsford; George J. Heeks, Rochester; Arnold W. Henry, Pittsford, and Che Chung Chow, Penfield, all of N.Y., assignors to Xerox Corporation, Stamford, Conn.

Filed Mar. 28, 1996, Ser. No. 623,273

Int. Cl.^{6} B32B *27/00*

U.S. Cl. 428—334 **18 Claims**

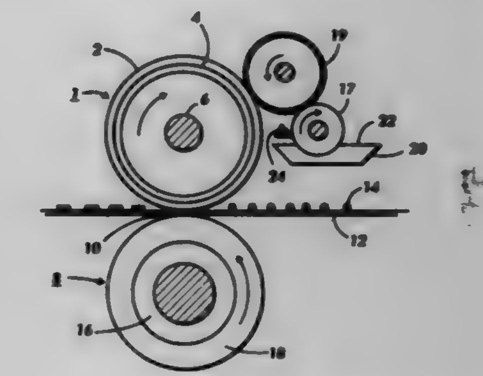

1. A fuser system member comprising a supporting substrate with a basic metal oxide-free outer surface layer consisting essentially of the reaction product of a fluoroelastomer, a polymerization initiator, a polyorganosiloxane and an amino silane.

5,700,569

MULTILAYERED ALUMINA COATED CEMENTED CARBIDE BODY

Sakari Ruppi, Fagersta, Sweden, assignor to Seco Tools AB, Fagersta, Sweden

Continuation of Ser. No. 390,507, Feb. 17, 1995, abandoned. This application Mar. 11, 1996, Ser. No. 613,533

Int. Cl.^{6} B32B *9/04*

U.S. Cl. 428—336 **10 Claims**

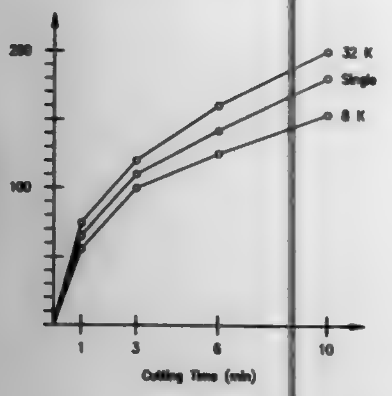

1. In a coated sintered cemented carbide having a substrate containing at least one metal carbide and a binder metal and a coating having a plurality of layers of alumina, the improvement resulting in optimized crater wear and flank wear resistance comprising having 6–8 alumina layers, the total thickness of the alumina layers being up to about 15 µm.

5,700,570

COMPOSITE CONSTRUCTION MATERIAL

Mohamed A. Fahmy, Portage, Mich., assignor to K2, Inc., Adrian, Mich.

Filed Feb. 14, 1996, Ser. No. 599,947

Int. Cl.^{6} B32B *23/08*

U.S. Cl. 428—342 **16 Claims**

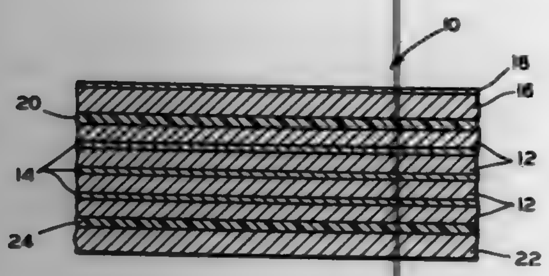

1. A composite construction material, comprising:

a first layer of kraft linerboard, optionally having a sealant on a surface thereof;

a plurality of superposed layers of water-resistant paperboard, said layers of water-resistant paperboard adhered together by means of layers of an adhesive positioned intermediate and contacting said layers of water-resistant paperboard;

a first polymer layer intermediate and adhered to the first layer of kraft linerboard and the plurality of superposed layers of water-resistant paperboard;

a second layer of kraft linerboard; and

a second polymer layer intermediate and adhered to the second layer of kraft linerboard and the plurality of superposed layers of water-resistant paperboard.

5,700,571

RELEASE FILMS FORMED BY COEXTRUSION

Daniel R. Logue, Upland; Piet T. Van Emmerik, Claremont; Roger H. Mann, Corona del Mar; Edward I. Sun, Alhambra, all of Calif.; Gary A. Avalon, Painesville; Carol A. Caldwell, Kirtland Hills, both of Ohio; Eng-Pi Chang, Arcadia, Calif., and Richard A. Huskey, Mentor, Ohio, assignors to Avery Dennison Corporation, Pasadena, Calif.

Continuation-in-part of Ser. No. 9,561, Jan. 25, 1993, abandoned. This application Dec. 22, 1993, Ser. No. 173,342

Int. Cl.^{6} B32B *7/12;15/04;* **A61F** *13/02*

U.S. Cl. 428—352 **9 Claims**

1. A laminate release film providing a release surface which comprises a first film formed from a first olefin polymer selected from the group consisting of low density ethylene homopolymers, high density ethylene homopolymers, ethylene-propylene copolymers containing up to about 50% by weight propylene, blends of polyethylene with ethylene-propylene copolymers, polypropylene and mixtures thereof having uniformly dispersed therein by dry blending using high shear mixing a release agent selected from the group consisting of polyethyleneimine octadecyl carbamide, polyvinyl octadecyl carbamate and mixtures thereof present in an amount of from about 0.1 to about 20 percent by weight based on the weight of the first olefin polymer and release agent, said first film coextruded with or cocast onto and permanently bonded to a second olefin polymer fill, provided to stiffen the first olefin polymer fill, the second olefin polymer film selected from the group consisting of isotactic polypropylene and copolymers of propylene with at least one other olefin monomer containing 2 or 4 carbon atoms and in which the monomer is present in an amount up to about 10% by weight of the copolymer.

5,700,572

PTFE FIBRE MATERIAL AND PROCESS FOR MAKING IT

Bruno Klatt; Manfred Horz, both of Wolfen; Hartmut Koelling, Dessau; Karlheinz Berndt, Bitterfeld; Gerhard Krueger; Hans-Joachim Kuenne, both of Magdeburg; Lothar Moerl, Hohenwarthe, and Lothar Backhauss, Osterweddingen, all of Germany, assignors to Heraeus Elektrochemie GmbH, Rodenbach, and Magdeburger Energie - und Umwelttechnik GmbH, Magdeburg, both of Germany

PCT No. PCT/DE92/00712, § 371 Date Jun. 2, 1995, § 102(e) Date Jun. 2, 1995, PCT Pub. No. WO93/05213, PCT Pub. Date Mar. 18, 1993

PCT Filed Aug. 27, 1992, Ser. No. 325,285

Claims priority, application Germany, Sep. 12, 1991, 41 30 356.3

Int. Cl.^{6} D02G *3/00;* **C25B** *9/00;13/00*

U.S. Cl. 428—357 **5 Claims**

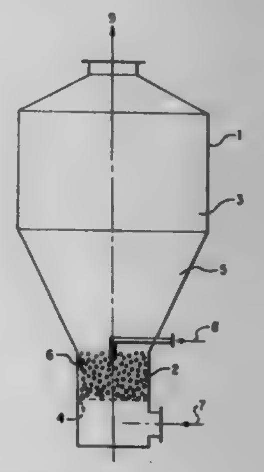

1. A fiber material, comprising:

PTFE; and

structural form of said PTFE presenting a plurality of fiber bundles, said fiber bundles including discrete microfibrils, said microfibrils in physical arrangement with one another within each of said fiber bundles to define irregularly shaped interstices between said microfibrils.

5,700,573

FLEXIBLE BIREGIONAL CARBONACEOUS FIBER, ARTICLES MADE FROM BIREGIONAL CARBONACEOUS FIBERS, AND METHOD OF MANUFACTURE

Francis Patrick McCullough, 104 Fir Dr., Lake Jackson, Tex. 77566

Filed Apr. 25, 1995, Ser. No. 428,691

Int. Cl.^{6} D02G *3/00;* **D01F** *9/12*

U.S. Cl. 428—364 **11 Claims**

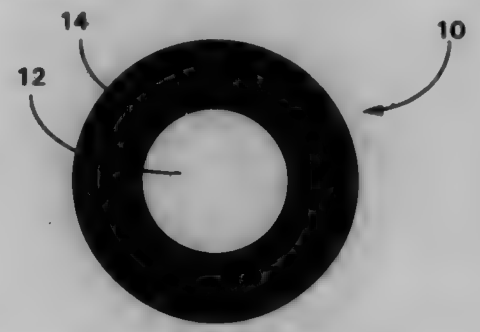

1. A biregional carbonaceous fiber derived from a single homogeneous polymeric precursor fiber, wherein said biregional carbonaceous fiber comprises an inner core region of a thermoplastic polymeric material and a surrounding outer sheath region of a carbonaceous material, and wherein said inner core region and said outer sheath do not present an intermediate zone between the regions.

5,700,574

SIZING COMPOSITION FOR GLASS ROVING

Martin C. Flautt, Granville; Leonard J. Adzima, Pickerington, both of Ohio, and Douglas B. Mann, Evans, Ga., assignors to Owens-Corning Fiberglas Technology, Inc., Summit, Ill.

Continuation-in-part of Ser. No. 291,801, Aug. 17, 1994, abandoned. This application Jun. 7, 1995, Ser. No. 485,746

Int. Cl.^{6} B32B *9/00;* **C08J** *00/00*

U.S. Cl. 428—392 **20 Claims**

1. A sizing composition for glass comprising a vinyl acetate copolymer emulsion, a polyvinyl acetate copolymer latex, and a vinyl acrylic copolymer emulsion.

5,700,575

WATER-INSOLUBLE AMMONIUM POLYPHOSPHATE PARTICLES

Masuo Iwata; Mika Seki; Kouji Inoue, all of Kanagawa; Ryoji Takahashi, Tokyo; Tikashi Fukumura, and Masaya Tanaka, both of Fukuoka, all of Japan, assignors to Chisso Corporation, Osaka, Japan

Filed Dec. 23, 1994, Ser. No. 362,974

Claims priority, application Japan, Dec. 27, 1993, 5-354191; Apr. 1, 1994, 6-087686; Apr. 6, 1994, 6-093721; Apr. 7, 1994, 6-095613

Int. Cl.^{6} B32B *5/16*

U.S. Cl. 428—403 **12 Claims**

1. Water-insoluble ammonium polyphosphate particles comprising melamine-coated ammonium polyphosphate particles with the surface thereof being crosslinked by a reaction between melamine

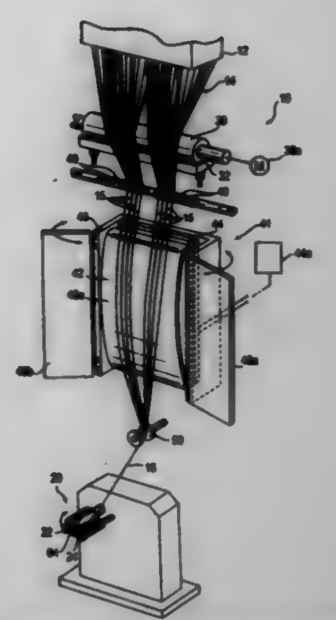

molecules of the melamine-coated ammonium polyphosphate particles and a crosslinking agent having a functional group capable of reacting with the active hydrogen atoms belonging to the amino group in the melamine molecules.

5,700,576

UV-CURABLE SCRATCH-RESISTANT VARNISH HAVING A THICKENER WHICH BECOMES BOUND IN THE COMPOSITION OF THE VARNISH BY POLYMERIZATION

Manfred Brehm, Aschaffenburg; Rolf Neeb, Pfungstadt; Wolfgang Scharnke, Darmstadt, and Volker Kerscher, Reinheim, all of Germany, assignors to Roehm GmbH Chemische Fabrik, Darmstadt, Germany

Filed Mar. 4, 1996, Ser. No. 609,771

Claims priority, application Germany, Mar. 2, 1995, 195 07 174.3

Int. Cl.^{6} C08L *33/08;33/10;81/02;* **B32B** *27/36*

U.S. Cl. 428—412 **11 Claims**

1. A coating agent for producing scratch-resistant coatings on plastic articles, which comprises:

(1) 1–30 wt. % of a prepolymer, as an in-polymerizable, thickener which prepolymer is bound in the composition of the coating by polymerization;

(2) 20–80 wt. % of multifunctional acrylates, multifunctional methacrylates, or mixtures thereof;

(3) 5–75 wt. % of a thinner;

(4) 0.01–10 wt. % of an ultraviolet initiator;

(5) 0–20 wt. % of customary additives, wherein the prepolymer (1) is obtained by radical polymerization of: (a) 90–99 wt. % of C_1–C_8-alkyl esters of acrylic- or methacrylic acid; and

(b) 1–10 wt. % of a sulfur-containing regulator having at least three thiol groups.

5,700,577

MOLECULAR GRAFTING TO ENERGETICALLY TREATED POLYESTERS TO PROMOTE ADHESION OF GELATIN-CONTAINING LAYERS

Jeremy Grace, Rochester; Louis J. Gerenser, Webster; Jangling Chen, Rochester, and Edgar E. Riecke, Pittsford, all of N.Y., assignors to Eastman Kodak Company, Rochester, N.Y.

Division of Ser. No. 415,826, Apr. 3, 1995, Pat. No. 5,563,029. This application Apr. 24, 1996, Ser. No. 638,900

Int. Cl.^{6} B32B *7/04*

U.S. Cl. 422—420 **4 Claims**

1. A film base comprising:

a polyester substrate having a surface exposed to an energetic treatment producing amine groups on the surface;

a coating of amine reactive hardener selected from the group consisting of 1,2-bis(vinylsulfonylacetamido)ethane, bis(vinylsulfonyl)methane, bis(vinylsulfonylmethyl)ether, bis(vinylsulfonylethyl)ether, 1,3-bis(vinylsulfonyl)propane, 1,3-bis(vinylsulfonyl)-2-hydroxypropane, 1,1-bis(vinylsulfonyl)ethylbenzenesulfonate sodium salt, 1,1,1-tris(vinylsulfonyl)ethane, tetrakis(vinylsulfonyl)methane, tris(acrylamido)hexahydro-s-triazine, copoly(acrolein-methacrylic acid), glycidyl ethers, acrylamides, dialdehydes, blocked dialdehydes, α-diketones, amine-reactive esters, sulfonate esters, amine-reactive halogenated compounds, s-triazines, diazines, epoxides, formaldehydes, formaldehyde condensation products, anhydrides, aziridines, amine-reactive olefins, blocked amine-reactive olefins, polymeric hardeners selected from the group consisting of polymeric aldehydes, polymeric vinylsulfones, polymeric blocked vinyl sulfones and amine-reactive halogenated polymers grafted to the surface.

5,700,578

FLUOROPOLYMER/TERPOLYMER COMPOSITE

Arthur F. Korney, Jr., Pickerington; Earl H. Sexton, III, and Winnie Young, both of Columbus, all of Ohio, assignors to Crane Plastics Company Limited Partnership, Columbus, Ohio

Filed Jun. 26, 1995, Ser. No. 494,378
Int. Cl.^{6} B32B *27/30;15/08*
U.S. Cl. 428—421 **17 Claims**

1. A plastic composite comprising at least two layers comprising:

(1) a first layer comprising a polymeric blend comprising at least one fluoropolymer and at least one polymeric material selected from the group consisting of (a) acrylonitrile-styrene-acrylic terpolymers, acrylonitrile-ethylene styrene terpolymers, ethylene-vinyl-acetate terpolymers, mixtures thereof, and (b) terpolymer-polyvinyl chloride blends; and

(2) at least one substrate material.

5,700,579

GLASS COMPOSITIONS INTENDED FOR THE PRODUCTION OF PANES

Pierre Jeanvoine, Poissy; Michel Limonde, Courbevoie, both of France, and Jacques Vieslet, Ceroux Mousty, Belgium, assignors to Saint-Gobain Vitrage, Courbevoie, France

Filed Sep. 19, 1994, Ser. No. 308,266
Claims priority, application France, Sep. 17, 1993, 93 11129
Int. Cl.^{6} B32B *17/10*
U.S. Cl. 428—437 **16 Claims**

1. A glass, comprising, in percentage by weight, based on the total weight of said glass:

(a) 0.75 to 1.4% total iron, expressed in the form Fe_2O_3; and

(b) 0.25 to 0.32% ferrous iron, expressed in the form FeO;

wherein said glass has a light transmission factor under illuminant A (TL_A) of at least 70%, a total energy transmission factor (T_E) less than 46%, and a transmission factor for ultraviolet radiation (T_{UV}) less than 25%, when said glass has a thickness between 3 and 3.3 millimeters,

wherein said glass comprises less than 0.1% of Ce oxide and less than 0.1% of Ti oxide.

5,700,580

HIGHLY SELECTIVE NITRIDE SPACER ETCH

David S. Becker, and David J. Keller, both of Boise, Id., assignors to Micron Technology, Inc., Boise, Id.

Continuation-in-part of Ser. No. 89,205, Jul. 9, 1993, Pat. No. 5,387,312. This application Sep. 7, 1994, Ser. No. 301,928
Int. Cl.^{6} H01L *21/306*
U.S. Cl. 428—446 **13 Claims**

1. A method of forming a nitride spacer over an underlying oxide layer, said method comprising the following steps of:

providing a substrate, said substrate having features disposed thereon;

providing a layer of oxide conformally over said substrate including said features;

providing a layer of nitride conformally over said oxide layer;

anisotropically etching a first portion of nitride material of said nitride layer without exposing oxide thereunder, said anisotropic etching using a first atmosphere having an ionized fluorocarbon compound that provides a source of polymerizable elements for limiting lateral etching of said nitride layer during said anisotropic etching; and

after said step of anisotropically etching, selectively removing a second portion of nitride material of said nitride layer sufficient to expose underlying oxide at given locations corresponding to regions of said nitride layer disposed on horizontal surfaces of said features, said selective removal using a second atmosphere having etching characteristics that differ from said first atmosphere, said second atmosphere comprising NF_3 ions in combination with an ionized halogen-containing compound so that said selective removal removes the nitride selectively with respect to the underlying oxide layer, thereby creating nitride spacers adjacent said features.

5,700,581

SOLVENT-FREE EPOXY BASED ADHESIVES FOR SEMICONDUCTOR CHIP ATTACHMENT AND PROCESS

Krishna G. Sachdev, Hopewell Junction; Michael Berger, Gardiner, and Mark S. Chace, Poughkeepsie, all of N.Y., assignors to International Business Machines Corporation, Armonk, N.Y.

Filed Jun. 26, 1996, Ser. No. 670,463
Int. Cl.^{6} B32B *9/04*
U.S. Cl. 428—447 **22 Claims**

1. A solvent-free curable epoxy base adhesive resin composition which is made without solvents and which when applied as an adhesive and cured to bond electronic components maintains adhesion during product stress testing, the composition comprising a solution of:

a siloxane containing polyepoxide;

a curing additive for the polyepoxide; and

a curing catalyst for the polyepoxide;

the siloxane containing polyepoxide, the curing additive and curing catalyst being mutually soluble without a solvent at the temperature of application.

5,700,582

POLYMER MATRIX COATING FOR INK JET MEDIA

Steven J. Sargeant, West Warwick, R.I.; Niall D. Behan, Limerick, Ireland; Dave Atherton, Saunderstown; Sen Yang, Warwick, both of R.I.; Miaoling Huang, Danielson, Conn., and Kang Sun, North Attleboro, Mass., assignors to Arkwright, Incorporated, Fiskeville, R.I.

Continuation-in-part of Ser. No. 354,909, Dec. 12, 1994, abandoned. This application Mar. 28, 1996, Ser. No. 623,102
Int. Cl.^{6} B41J *2/01;* **B41M** *5/00*
U.S. Cl. 428—476.6 **20 Claims**

1. An ink jet recording medium, comprising a base substrate that has coated on a surface thereof a polymer matrix coating that can receive a pigmented ink and which contains at least one layer having a glass transition temperature that is greater than or equal to about 120° C. and less than or equal to about 300° C., an integrity value greater than or equal to about −20% and a swellability greater than or equal to about 50%.

5,700,583

HYDROGELS OF ABSORBABLE POLYOXAESTERS CONTAINING AMINES OR AMIDO GROUPS

Dennis D. Jamiolkowski, Long Valley, and Rao S. Bezwada, Whitehouse Station, both of N.J., assignors to Ethicon, Inc., Somerville, N.J.

Continuation-in-part of Ser. No. 611,529, Mar. 5, 1996, which is a continuation-in-part of Ser. No. 598,721, Feb. 8, 1996, Pat. No. 5,595,751, which is a continuation-in-part of Ser. No. 554,011, Nov. 6, 1995, abandoned, which is a continuation-in-part of Ser. No. 399,308, Mar. 6, 1995, Pat. No. 5,464,929. This application Nov. 6, 1996, Ser. No. 744,657
Int. Cl.^{6} B32B *27/06;* **A61F** *13/00;* **C08F** *20/00*
U.S. Cl. 428—482 **67 Claims**

1. A crosslinked aliphatic polyoxaester comprising a polyoxaester having a first divalent repeating unit of formula I:

$$[O—C(O)—C(R_1)(R_2)—O—(R_3)—O—C(R_1)(R_2)—C(O)—] \qquad I$$

and a second repeating unit selected from the group of formulas consisting of:

$$[—O—R_{12}—]_U, \qquad XIV$$

wherein R_1 and R_2 are independently hydrogen or an alkyl group containing 1 to 8 carbon atoms; R_3 is an alkylene unit or is an oxyalkylene group of the following formula:

$$—[(CH_2)_C—O—]_D—(CH_2)_E— \qquad IV$$

wherein C is an integer in the range of from 2 to about 5, D is an integer in the range of from about 0 to about 2,000, and E is an integer in the range of from about 2 to about 5, except when D is zero in which case E will be an integer from 2 to 12; R_{12} is an alkylene unit containing from 2 to 8 carbon atoms and containing an internal amine (—$N(R_{10})$—) or amide (—$N(R_{11})$—); R_{10} and R_{11} are independently hydrogen or an alkyl group containing 1 to 8 carbon atoms; and U is an integer in the range of from 1 to about 2,000; wherein the aliphatic polyoxaester has been crosslinked.

5,700,584

THERMAL TRANSFER RECORDING MEDIUM

Hideki Suematsu, Osaka, Japan, assignor to Fujicopian Co., Ltd., Japan

Filed Mar. 24, 1995, Ser. No. 410,045
Claims priority, application Japan, Mar. 25, 1994, 6-056244
Int. Cl.^{6} B41M *5/26;5/34;5/40*
U.S. Cl. 428—484 **7 Claims**

1. A thermal transfer recording medium comprising a foundation, and a filling transfer layer provided on the foundation, the filling transfer layer being thermally transferred onto a receptor in advance of formation of a print image thereon, the filling transfer

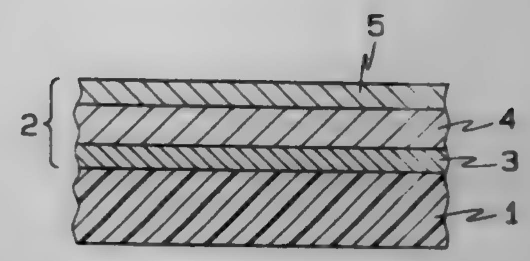

layer being colorlessly transparent and comprising a release layer containing a wax as the major component on a weight basis, a transfer layer comprising a tackifier resin as a main ingredient and having a high melt viscosity and an adhesive layer containing a wax as the major component on a weight basis, the three layers being stacked in this order on the foundation.

5,700,585

ACRYLIC EMULSION COATINGS FOR FORMED ARTICLES

Ivan Lee, Arcadia, Calif., assignor to Avery Dennison Corporation, Pasadena, Calif.

Continuation-in-part of Ser. No. 389,571, Feb. 14, 1995. This application Jun. 7, 1995, Ser. No. 486,947
Int. Cl.^{6} C08L *33/08;33/10;33/02;43/04*
U.S. Cl. 428—500 **18 Claims**

1. A top coated article comprising a vacuum formed article having thereon a soft non-tacky coat of an emulsion copolymer of from about 0.7 to about 20% by weight of at least one copolymerizable low surface energy monomer, selected from the group consisting of reactive silicones, fluorocarbons and fatty acid esters having a functionality selected from the group consisting of vinyl, acrylic and methacrylic from about 30 to about 85% by weight of at least one alkyl acrylate containing from 1 to about 10 carbon atoms in the alkyl group, the balance of the monomers comprising hard monomers, said hard monomers, when homopolymerized having a glass transition temperature greater than about 25° C. and present in an amount sufficient to produce a non-tacky emulsion copolymer.

5,700,586

LAMINATE AND PRODUCTION METHOD THEREOF

Erkki Laiho, and Markku Sainio, both of Porvoo, Finland, assignors to Borealis Polymers Oy, Porvoo, Finland

PCT No. PCT/FI93/00060, § 371 Date Aug. 12, 1994, § 102(e) Date Aug. 12, 1994, PCT Pub. No. WO93/16877, PCT Pub. Date Sep. 2, 1993
PCT Filed Feb. 19, 1993, Ser. No. 284,435
Claims priority, application Finland, Feb. 19, 1992, 920703
Int. Cl.^{6} B32B *9/00*
U.S. Cl. 428—507 **19 Claims**

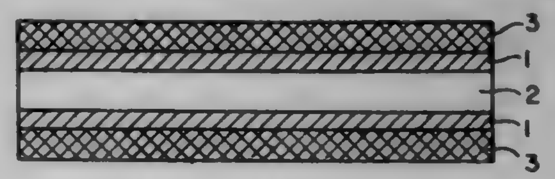

1. A recyclable laminate, comprising:

(A) at least one first layer made from cellulose fibers;

(B) at least one second layer spaced apart from said first layer, wherein said second layer is made from a substantially non-water-soluble polymer material; and

(C) at least one third layer between said first and said second layers which directly bonds to said first layer and bonds said first and second layers to each other, wherein said third layer

comprises a polymer which is water-soluble at neutral Ph conditions and exhibits a decomposition temperature of at least 160° C.

5,700,587
RESORCINOL-GLUTARALDEHYDE RESIN AS AN ACCELERATOR FOR CURING PHENOL-FORMALDEHYDE RESINS
David Wen-I Shiau; William David Detlefsen, both of Eugene, and Earl Kay Phillips, Springfield, all of Oreg., assignors to Borden Chemical, Inc., Columbus, Ohio
Division of Ser. No. 269,111, Jun. 30, 1994, Pat. No. 5,446,089, which is a division of Ser. No. 991,208, Dec. 15, 1992, Pat. No. 5,364,902. This application Apr. 13, 1995, Ser. No. 422,318
Int. Cl.⁶ B32B *21/08*
U.S. Cl. 428—528 **9 Claims**

1. A process for the production of cellulosic board materials by bonding cellulosic components under heat and pressure, comprising
(a) applying to separate cellulosic components an effective amount of a binder therefor comprising in admixture an alkaline phenolic resole resin solution having a solids content of at least 40% by weight and a resorcinol-glutaraldehyde resin; and
(b) subjecting said cellulosic components, to which said binder has been applied, to heat and pressure to cure said binder and to unite said components in board form.

5,700,588
MAGNETORESISTANCE EFFECT ELEMENT
Yoshiaki Saito, Yokohama; Shiho Okuno, Kawasaki, and Keichiro Inomata, Yokohama, all of Japan, assignors to Kabushiki Kaisha Toshiba, Kawasaki, Japan
Continuation of Ser. No. 234,863, Apr. 28, 1994, Pat. No. 5,523,172, which is a continuation of Ser. No. 858,413, Mar. 27, 1992, abandoned. This application Mar. 8, 1996, Ser. No. 613,170
Claims priority, application Japan, Mar. 29, 1991, 3-065788
Int. Cl.⁶ G11B *5/00*
U.S. Cl. 428—611 **1 Claim**

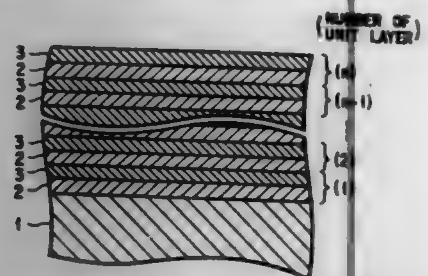

1. A magnetoresistance effect element comprising a multilayer formed by alternatively stacking at least two magnetic layers and at least one non-magnetic layer in a manner to produce a magnetoresistance effect, said magnetic layers consisting essentially of an alloy of the formula:

$$(Fe_{1-x}Co_x)_yNi_{1-y}$$

wherein 0<x<1 and 0<Y<1 and having a thickness of from 2 to 50 Å, said non-magnetic layer consisting essentially of Cu and alloys of Cu, said non-magnetic layer having a thickness of from 2 to 100 Å.

5,700,589
Patent Not Issued For This Number

5,700,590
NUTRITIONAL FORMULA WITH RIBO-NUCLEOTIDES
Marc Leif Masor, Worthington; James Lee Leach, Columbus; Bruce Edward Molitor, Westerville; John Durand Benson, Powell, and Jeffrey H. Baxter, Galena, all of Ohio, assignors to Abbott Laboratories, Abbott Park, Ill.
Continuation-in-part of Ser. No. 178,687, Jan. 10, 1994, Pat. No. 5,492,899. This application Jan. 11, 1996, Ser. No. 585,221
Int. Cl.⁶ A23L *1/305;* **A61K** *31/70*
U.S. Cl. 426—656 **42 Claims**

1. An enteral formula, said formula comprising:
1) protein, said protein being of a concentration of between 10 and 35 grams per liter of formula:
2) fat, said fat being of a concentration of between 20 and 45 grams per liter of formula;
3) carbohydrates, said carbohydrates being of a concentration of between 60 and 110 grams per liter of formula; and
4) at least 70 mg of nucleotide equivalents per liter of formula, and wherein said nucleotide equivalents are nucleotide equivalents of each of adenosine, cytidine, guanosine and uridine; and wherein the weight ratio of CMP:UMP is from about 1.5:1 to about 2.6:1: of CMP:AMP is from about 2:1 to about 3.9:1; and of CMP:GMP is from about 1.75:1 to about 2.8:1.

5,700,591
LIGHT-EMITTING THIN FILM AND THIN FILM EL DEVICE
Michio Okajima, Neyagawa, and Takao Tohda, Ikoma, both of Japan, assignors to Matsushita Electric Industrial Co., Ltd., Kadoma, Japan
Continuation of Ser. No. 665,799, Mar. 8, 1991, abandoned. This application Mar. 23, 1994, Ser. No. 216,853
Claims priority, application Japan, Mar. 14, 1990, 2-063152; Mar. 28, 1990, 2-079449; Oct. 2, 1990, 2-265654; Oct. 22, 1990, 2-285640
Int. Cl.⁶ H05B *33/00*
U.S. Cl. 428—690 **15 Claims**

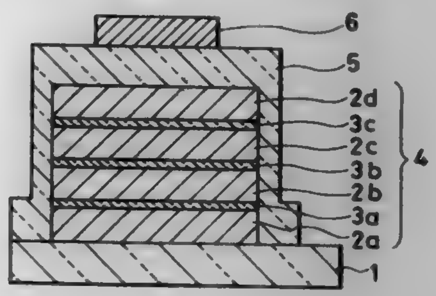

1. A light emission film having a multi-layer structure, comprising:
at least one phosphor film sandwich, each at least one phosphor film sandwich including a phosphor film and first and second barrier layers, said first and second barrier layers being separated by and in contact with said phosphor film,
wherein the thickness of said phosphor film is less than 50 nm and larger than 1 nm, and the energy gap of said barrier layers is larger than that of said phosphor film to thereby confine carriers within said phosphor film.

5,700,592
ELECTROLUMINESCENT MATERIALS FOR EDGE EMITTERS
Gerd O. Mueller, and Regina B. Mueller-Mach, both of San Jose, Calif., assignors to Hewlett-Pacard Company, Palo Alto, Calif.
Filed Dec. 13, 1995, Ser. No. 571,566
Int. Cl.⁶ H05B *33/00*
U.S. Cl. 428—690 **18 Claims**

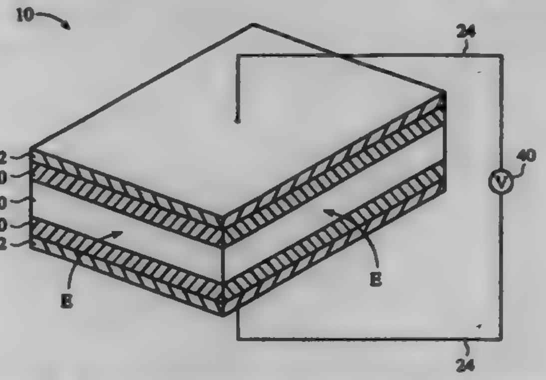

1. A thin film electroluminescent edge emitter device comprising:
an active monolithic layer having opposed major surfaces;
a first and a second dielectric layer, each said dielectric layer formed upon one of said major surfaces of said active layer thereby leaving exposed an edge face of said active layer; and
a first and a second electrode layer, each said electrode layer formed upon an exposed surface of said dielectric layers;
said active monolithic layer comprising:
a host compound including a mixture of at least two cations selected from the Group II elements and a first anion selected from the Group VIA elements; and
a first impurity element selected from the group of rare earth elements, said first impurity element having one of a 3+ oxidation state and a 2+ oxidation state;
said host compound being doped with said first impurity element.

5,700,593
METAL THIN FILM MAGNETIC RECORDING MEDIUM AND MANUFACTURING METHOD THEREOF
Yoshinobu Okumura, and Xingbo Yang, both of Osaka, Japan, assignors to Kubota Corporation, Osaka, Japan
Filed Mar. 7, 1994, Ser. No. 206,849
Claims priority, application Japan, Jun. 23, 1993, 5-152403; Oct. 14, 1993, 5-257176
Int. Cl.⁶ G11B *5/66;5/70*
U.S. Cl. 428—694 TS **19 Claims**

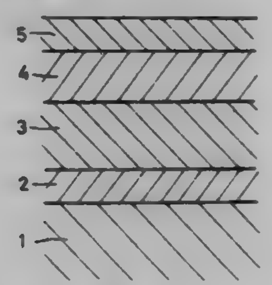

1. A metal thin film magnetic recording medium, comprising:
(i) a non-magnetic substrate;
(ii) a seed layer on said substrate;
(iii) an underlying non-magnetic layer, comprising Cr, on said seed layer; and
(iv) a magnetic layer, comprising a Co-alloy having a uni-axial magnetocrystalline anisotropy, on said underlying non-magnetic layer;
wherein said seed layer comprises an oxygen-containing non-magnetic metal and said oxygen-containing non-magnetic metal is amorphous as determined by X-ray diffraction.

5,700,594
MAGNETIC MEDIUM CAPABLE OF SUPPORTING BOTH LONGITUDINAL AND PERPENDICULAR RECORDING, AND METHOD OF MAKING SAME
Frederick John Jeffers, Escondido, Calif., assignor to Eastman Kodak Company, Rochester, N.Y.
Filed Feb. 9, 1995, Ser. No. 385,613
Int. Cl.⁶ G11B *5/70;5/712;5/714*
U.S. Cl. 428—694 BA **3 Claims**

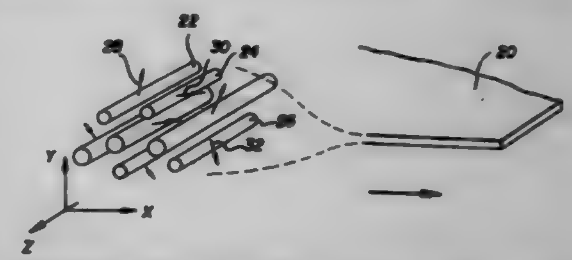

1. Magnetic medium comprising:
a substrate having mutually perpendicular length, width and depth dimensions;
a magnetic layer on said substrate, said layer including acicular magnetic particles, each of said particles having a longitudinal axis and having an easy magnetic axis perpendicular to said longitudinal axis; wherein said particles are oriented such that said longitudinal axes of said particles are parallel to each other and are parallel to said width dimension; wherein said easy magnetic axes of said acicular magnetic particles are randomly oriented at polar angles of 0°–360° relative to said longitudinal axes; such that said magnetic medium exhibits during recording longitudinal and perpendicular magnetization components.

5,700,595
ION EXCHANGE MEMBRANE FUEL CELL POWER PLANT WITH WATER MANAGEMENT PRESSURE DIFFERENTIALS
Carl Reiser, Glastonbury, Conn., assignor to International Fuel Cells Corp., South Windsor, Conn.
Filed Jun. 23, 1995, Ser. No. 494,132
Int. Cl.⁶ H01M *8/00*
U.S. Cl. 429—13 **6 Claims**

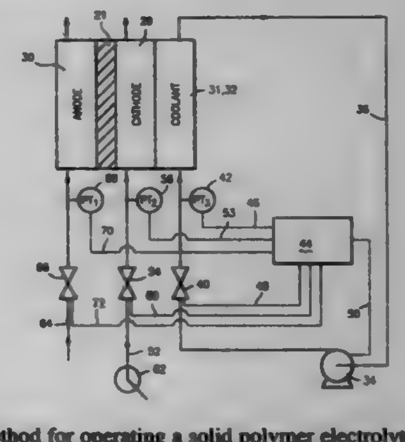

1. A method for operating a solid polymer electrolyte membrane fuel cell power plant, said method comprising the steps of
a) providing oxidant and fuel reactant gas streams on opposite cathode and anode sides of the solid polymer electrolyte membrane;

b) providing a circulating water coolant stream on said cathode side of the electrolyte membrane;

c) providing a fine pore plate between said oxidant gas stream and said circulating water coolant stream; and

d) pressurizing said oxidant reactant gas stream to a first predetermined pressure;

e) pressurizing said water coolant stream to a second predetermined pressure which is less than said first predetermined pressure so as to create a positive target pressure differential (ΔP) between said oxidant reactant gas stream and said water coolant stream, which ΔP is operative to pump product water formed on the cathode side of the electrolyte membrane through said fine pore plate and into said circulating water coolant stream.

5,700,596

NICKEL HYDROXIDE ACTIVE MATERIAL POWDER AND NICKEL POSITIVE ELECTRODE AND ALKALI STORAGE BATTERY USING THEM

Munehisa Ikoma, Shiki-gun; Norikatsu Akutsu, Kamakura; Masashi Enokido; Fumihiko Yoshii, both of Fujisawa; Hideo Kaiya, Chigasaki, and Shingo Tsuda, Fujisawa, all of Japan, assignors to Matsushita Electric Industrial Co., Ltd., Osaka, Japan

Filed Nov. 21, 1991, Ser. No. 795,845

Claims priority, application Japan, Jul. 8, 1991, 3-194923; Jul. 8, 1991, 3-194931

Int. Cl.^{6} H01M *4/32;4/88;6/04*

U.S. Cl. 429—206 **50 Claims**

1. A nickel hydroxide active material powder for use in making nickel positive electrodes, which is a mixture of spherical or nearly spherical particles having a particle size of about 10–30 μm and non-spherical particles having a particle size of less than about 10 μm which comprises a nickel hydroxide powder containing 1–7 wt % of at least one metal selected from the group consisting of cadmium, calcium, zinc, magnesium, iron, cobalt and manganese before production of positive electrodes and is an aggregate of innumerable primary particles of 0.1 μm or less.

10. A nickel hydroxide active material for nickel positive electrodes which comprises a nickel hydroxide powder containing 1–7 wt % of at least one metal selected from the group consisting of cadmium, calcium, zinc, magnesium, iron, cobalt and manganese, is an aggregate of innumerable primary particles of 0.1 μm or less, and has a void volume having a pore radius of 30 Å or more of 20–70% based on total void volume.

5,700,597

METHOD FOR PREPARING $LI_{1+X}MN_{2-X-Y}M_YO_4$ FOR USE IN LITHIUM BATTERIES

Qiming Zhong; Ulrich Von Sacken, both of Coquitlam; Yuan Gao, Delta, and Jeffery Raymond Dahn, Surrey, all of Canada, assignors to Moli Energy (1990) Limited, Canada

Filed Dec. 6, 1995, Ser. No. 568,244

Claims priority, application Canada, Nov. 24, 1995, 2163695

Int. Cl.^{6} H01M *4/50*

U.S. Cl. 429—218 **26 Claims**

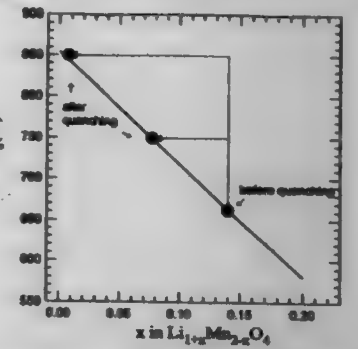

1. A method for making an insertion compound having the formula $Li_{1+x}Mn_{2-x-y}M_yO_4$ wherein M is a transition metal, x is a number greater than zero and less than 0.33, y is a number greater than or equal to zero and less than about 1, the insertion compound having a spinel-phase crystal structure, and a maximum critical temperature for phase stability T_c; said method comprising selecting a process from the group consisting of:

(a) (1) heating a stoichiometric mixture of a first lithium salt and a first manganese compound at a temperature in the range from greater than T_c but less than about 900° C. so that an intermediate compound and having the approximate formula $Li_1Mn_{2-y}M_yO_4$ and a spinel-phase crystal structure is obtained;

(2) mixing a stoichiometric amount of the intermediate compound and a second lithium salt selected to obtain said insertion compound at a temperature less than T_c; and

(3) heating the stoichiometric amount of said intermediate compound and said second lithium salt at a temperature in the range from greater than 400° C. to less than about T_c so that said insertion compound having the formula $Li_{1+x}Mn_{2-x-y}M_yO_4$ is obtained; and

(b) heating a stoichiometric mixture of LiCl and a second manganese compound at a reaction temperature in the range from greater than about 400° C. to less than about T_c, so that said insertion compound having the formula $Li_{1+x}Mn_{2-x-y}M_yO_4$ is obtained.

5,700,598

METHOD FOR PREPARING MIXED AMORPHOUS VANADIUM OXIDES AND THEIR USE AS ELECTRODES IN REACHARGEABLE LITHIUM CELLS

Sophie Denis; Francois Orsini, both of Amiens, France; Jean-Marie Tarascon, Martinsville, N.J., and Marcel Touboul, Paris, France, assignors to Bell Communications Research, Inc., Morristown, N.J.

Filed Jul. 11, 1996, Ser. No. 678,210

Int. Cl.^{6} H01M *4/48*

U.S. Cl. 429—218 **13 Claims**

1. A method for preparing an amorphous ternary lithiated vanadium metal oxide of the formula $Li_xM_yV_zO_{(x+5z+ny)/2}$, where M is a metal, $0<x\leq3$, $0<y\leq3$, $1\leq z\leq4$, and $n=2$ or 3

characterized in that

a) an aqueous solution is prepared of

1) at least one metavanadate salt selected from the group consisting of NH_4VO_3 and $NaVO_3$,

2) a nitrate salt of the formula $M(NO_3)_n$, where M is said metal, and

3) an excess of a lithium salt;

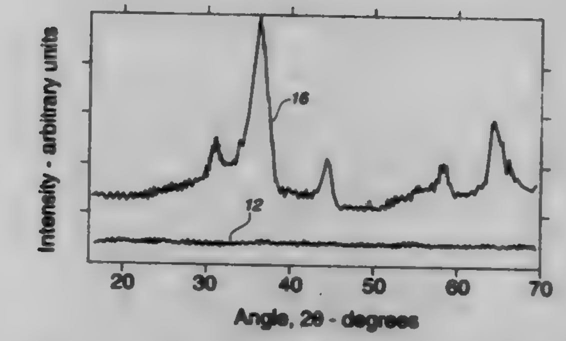

b) the resulting solution is heated; and

c) a sufficient amount of a base is added to the heated solution to obtain a pH suitable for precipitating the amorphous lithiated vanadium metal oxide.

5,700,599

HIGH ABSORPTION RATE BATTERY SEPARATOR

Thomas Danko, 3013 Edgewood Pkwy., Woodridge, Ill. 60517, and Myron Donald Nicholson, 13102 S. Red Dr., Lemont, Ill. 60439

Filed Jan. 12, 1996, Ser. No. 585,554

Int. Cl.^{6} H01M *2/18*

U.S. Cl. 429—249 **22 Claims**

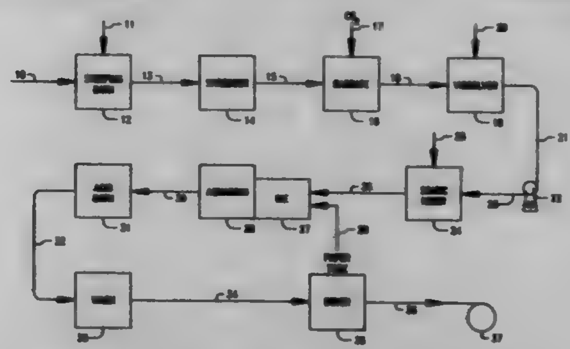

1. A delamination resistant, battery separator comprising:

a nonwoven cellulosic substrate coated on at least one surface with a film of cellulose, regenerated cellulose, deacetylated cellulose acetate, or viscose having a degree of polymerization of at least about 600 wherein said separator has an absorption rate of at least 6 mm/5 min. of an aqueous 30 wt. % KOH solution, and a 30 wt. % KOH solution absorption capacity of at least 330 g/m^2.

5,700,600

LONG LIFE BATTERY SEPARATOR

Thomas Danko, 3013 Edgewood Pkwy., Woodridge, Ill. 60517, and Myron Donald Nicholson, 13102 S. Red Dr., Lemont, Ill. 60439

Filed Jan. 12, 1996, Ser. No. 585,555

Int. Cl.^{6} H01M *2/16*

U.S. Cl. 429—249 **30 Claims**

1. A delamination resistant, battery separator comprising:

a nonwoven substrate comprising noncellulosic fibers, said substrate having on at least one surface an extrusion coated cellulosic film having a degree of polymerization of at least about 350, said separator having at least 20% by weight of cellulose added to said substrate based on a bone dry gauge weight of said nonwoven substrate, and said separator having an absorption rate of at least 6 mm/5 min. of an aqueous 30 wt. % KOH solution, and a 30 wt. % KOH solution absorption capacity of at least 200 g/m^2 and a retained wet tensile

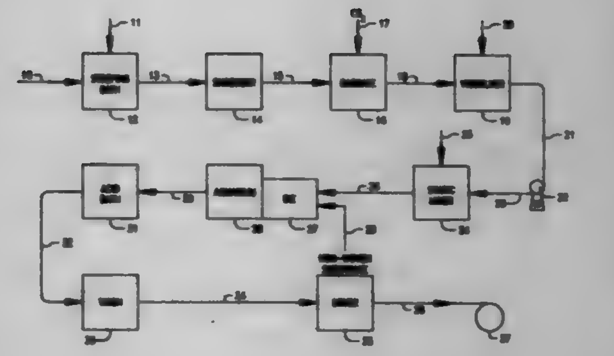

strength of at least 70% after 41 days in an aqueous solution of 40 weight % KOH.

5,700,601

PHOTOMASK, MANUFACTURE OF PHOTOMASK, FORMATION OF PATTERN, MANUFACTURE OF SEMICONDUCTOR DEVICE, AND MASK PATTERN DESIGN SYSTEM

Norio Hasegawa, Hinode-machi; Tsuneo Terasawa, Ome; Hiroshi Fukuda, Kodaira; Katsuya Hayano; Akira Imai, both of Hachioji; Akemi Moniwa, Hannou, and Shinji Okazaki, Urawa, all of Japan, assignors to Hitachi, Ltd., Tokyo, Japan

Filed Jun. 28, 1995, Ser. No. 495,836

Claims priority, application Japan, Jun. 29, 1994, 6-146890; Jul. 27, 1994, 6-175088; Sep. 14, 1994, 6-219786

Int. Cl.^{6} G03F *9/00*

U.S. Cl. 430—5 **22 Claims**

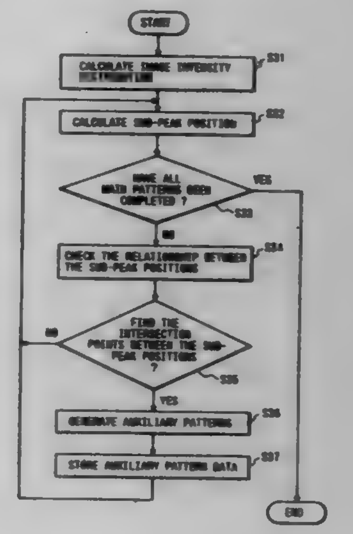

11. A photomask comprising a semitransparent area and a transparent area for at least exposure light, in which the phase angle of a light beam passing through said semitransparent area is different from the phase angle of a light beam passing through said transparent area substantially by 180°,

wherein a transparent auxiliary pattern having the same phase angle of light as that of said main pattern and having a dimension being a resolution limit of projection optics or less is disposed at an area of said photomask corresponding to a position where interference light beams from different two sides of a main pattern formed of said transparent area overlap each other.

5,700,602

METHOD AND APPARATUS FOR PRECISION DETERMINATION OF PHASE-SHIFT IN A PHASE-SHIFTED RETICLE

Giang T. Dao, Fremont; Nelson N. Tam, Foster City; Gang Liu, Sunnyvale, and Jeffrey N. Farnsworth, Los Gatos, all of Calif., assignors to Intel Corporation, Santa Clara, Calif.

Continuation of Ser. No. 239,412, May 6, 1994, abandoned, which is a continuation-in-part of Ser. No. 12,564, Feb. 2, 1993, Pat. No. 5,348,826, which is a continuation-in-part of Ser. No. 933,400, Aug. 21, 1992, Pat. No. 5,302,477, which is a continuation-in-part of Ser. No. 933,341, Aug. 21, 1992, Pat. No. 5,300,379. This application Oct. 30, 1995, Ser. No. 538,354

Int. Cl.^{6} G03F *9/00*

U.S. Cl. 430—5 **51 Claims**

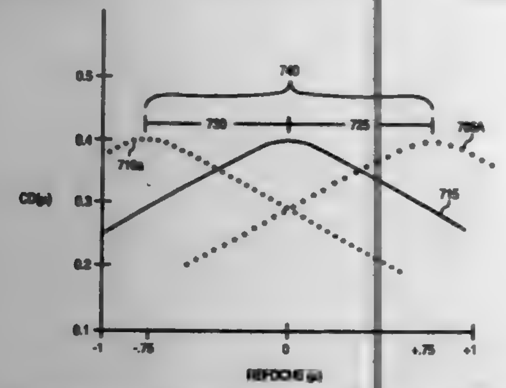

1. A method of determining phase-shift in a phase-shifted reticle comprising the steps of:

providing on said reticle a first feature, said first feature being a phase-shifted feature;

providing on said reticle a second feature;

measuring a first dimension of a first image of said first feature and a second dimension of a second image of said second feature; and

determining said phase-shift based upon a comparison of said first dimension and said second dimension.

5,700,603

SEMICONDUCTOR DEVICE HAVING X-RAY LITHOGRAPHIC MASK AND METHOD FOR MANUFACTURING THE SAME

Byung-hun Lee, Uiwang, Rep. of Korea, assignor to Samsung Electronics Co., Ltd., Suwon, Rep. of Korea

Filed Jan. 24, 1996, Ser. No. 590,796

Claims priority, application Rep. of Korea, Jan. 24, 1995, 95-1229

Int. Cl.^{6} G03F *9/00*

U.S. Cl. 430—5 **18 Claims**

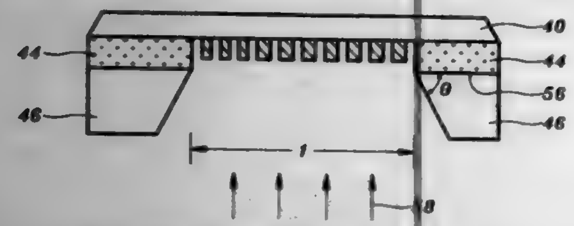

1. A mask for lithography, comprising:

a membrane;

a mask pattern formed on a central region of the membrane;

an intermediate layer formed on the peripheral region of the membrane and surrounding the mask pattern; and

a supporter formed on said intermediate material, a wall of the supporter meeting the intermediate material at a predetermined angle,

wherein the mask pattern, the intermediate material, and the supporter are formed over one side of the membrane.

5,700,604

CHARGED PARTICLE BEAM EXPOSURE METHOD AND MASK EMPLOYED THEREFOR

Teruaki Okino, Kanagawa-ken, Japan, assignor to Nikon Corporation, Tokyo, Japan

Filed Feb. 26, 1996, Ser. No. 607,315

Claims priority, application Japan, Mar. 1, 1995, 7-042054

Int. Cl.^{6} G03F *9/00*

U.S. Cl. 430—5 **14 Claims**

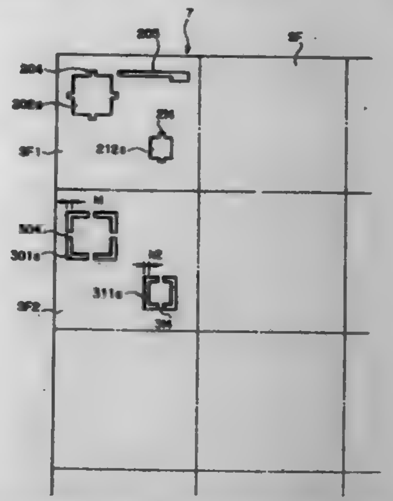

1. A charged particle beam exposure method in which a charged particle beam is irradiated to a mask to transfer an image of a pattern formed on the mask onto a radiation-sensitive substrate, said method comprising:

dividing one exposed pattern element which is to be formed on said radiation-sensitive substrate into a plurality of regions including a peripheral region lying at a marginal portion of the exposed pattern element and at least one inner region lying inside said peripheral region, and forming a plurality of patterns respectively corresponding to said regions on said mask; and

adjusting, when the patterns are to be transferred onto said radiation-sensitive substrate, transfer positions of images of the patterns corresponding to said regions so that said regions are combined together to form said one exposed pattern element on said radiation-sensitive substrate.

5,700,605

MASK FOR LIGHT EXPOSURE AND PROCESS FOR PRODUCTION OF THE SAME

Shin-ichi Ito, Yokohama, and Takayuki Iwamatsu, Abiko, both of Japan, assignors to Kabushiki Kaisha Toshiba, Kawasaki, Japan

Filed Mar. 15, 1996, Ser. No. 616,306

Claims priority, application Japan, Mar. 15, 1995, 7-056089; Mar. 21, 1996, 8-055141

Int. Cl.^{6} G03F *9/00*

U.S. Cl. 430—5 **25 Claims**

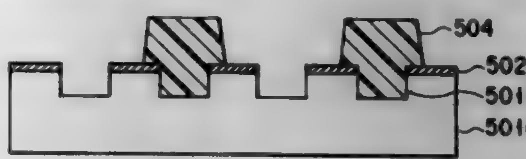

1. A mask for light exposure which is provided with a light transparent substrate and a mask pattern formed on said light transparent substrate, said mask pattern comprising a light screening pattern composed of material which screens the exposure light and transmits a phase measuring light having a wavelength longer than that of the exposure light and a phase shift pattern formed by engraving a part of the light transparent substrate.

5,700,606

PHOTOMASK AND A MANUFACTURING METHOD THEREOF

Shinji Kobayashi, Nara, and Masashi Inoue, Sakai, both of Japan, assignors to Sharp Kabushiki Kaisha, Osaka, Japan

Filed Apr. 10, 1996, Ser. No. 630,600

Claims priority, application Japan, May 31, 1995, 7-133835

Int. Cl.^{6} G03F *9/00*

U.S. Cl. 430—5 **21 Claims**

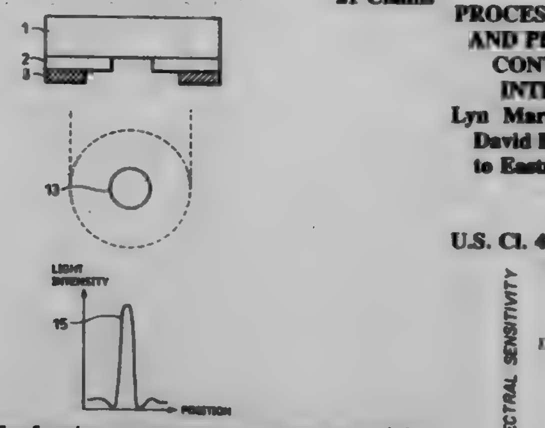

1. A photomask for forming a pattern on an exposure-receiving surface of a wafer, the photomask comprising:

a transparent substrate through which exposure light is transmissible;

a semitransparent film that has a transmitting section that allows the exposure light to pass without changing the phase of the exposure light and an inversion transmitting section that is adjacent to the transmitting section and that inverts the phase of the exposure light, the semitransparent film being arranged to form a pattern on the transparent substrate by using the inversion transmitting section and the transmitting section; and

a light-shielding film that is formed on a portion of the semitransparent film that corresponds to a portion of the exposure-receiving surface to which a 1st order diffracted light ray of the transmitted light that has passed through the transmitting section is directed.

5,700,607

METHOD OF FORMING A MULTILAYER PRINTED CIRCUIT BOARD AND PRODUCT THEREOF

James Rath, Orange; William Leong-Gia Tran, Garden Grove; Kathy M. Flynn, Santa Clarita; Vinai Ming Tara, Anaheim; Thomas A. Koes, Riverside, and Vincent J. Nizzo, Tustin, all of Calif., assignors to Morton International, Inc., Chicago, Ill.

Continuation of Ser. No. 447,339, May 22, 1995, abandoned, which is a division of Ser. No. 271,614, Jul. 7, 1994, abandoned, which is a continuation-in-part of Ser. No. 883,436, May 15, 1992, abandoned. This application Nov. 8, 1996, Ser. No. 748,518

Int. Cl.^{6} G03F *7/027*

U.S. Cl. 430—15 **13 Claims**

1. A multilayer printed circuit board fabricated with a plurality of permanent printed innerlayers each of which comprises a board of dielectric material, a metal layer on said board, and a light- and heat-cured photoresist on said metal layer, said photoresist comprising:

(a) from about 5 to about 40% by weight of a polymerizable acrylate monomer;

(b) from about 5% to about 35% by weight of an oligomer formed by the reaction of an epoxy resin and an acrylic or methacrylic acid;

(c) a photosensitive, free radical generating initiator for polymerization of the acrylate monomer and the oligomer;

(d) a curable epoxy resin;

(e) a curing agent for the epoxy resin;

(f) from 0% to about 15% by weight of a cross-linking agent reactive with hydroxyl groups, all based on the total weight of components (a) through (f); and

(g) up to about 4% by weight of a filler.

5,700,608

PROCESS FOR MAKING PHOTOGRAPHIC EMULSIONS AND PHOTOGRAPHIC ELEMENTS AND EMULSIONS CONTAINING LATENT IMAGE FORMING UNITS INTERNALLY CONTAINING SENSITIZING DYE

Lyn Marie Eshelman, Penfield; David Darrell Miller, and David Howard Levy, both of Rochester, all of N.Y., assignors to Eastman Kodak Company, Rochester, N.Y.

Filed Mar. 19, 1996, Ser. No. 618,481

Int. Cl.^{6} G03C *1/035;1/12*

U.S. Cl. 430—20 **22 Claims**

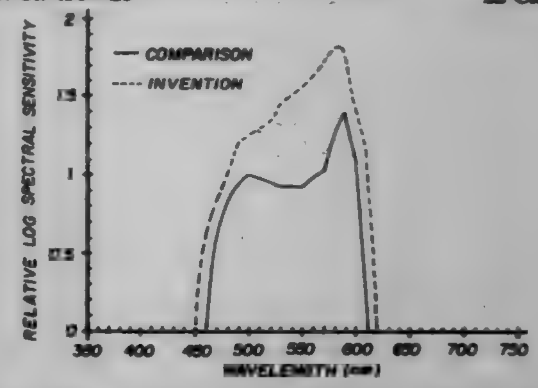

1. A photographic element comprising a silver halide emulsion having incorporated therein a latent image forming unit, said unit being comprised of an agglomeration of silver halide in conductive contact with a light absorbing center, wherein the center is comprised of:

(i) an amorphous or liquid crystalline spectral sensitizing dye; or

(ii) a plurality of spectral sensitizing dye crystals; and wherein the light absorbing center further comprises a binder, surfactant or stabilizer.

5,700,609

METHOD OF MANUFACTURING DISPLAY SCREEN

Hidemi Matsuda, Fukaya; Takeo Itou, Kumagaya, and Tomoko Nakazawa, Maebashi, all of Japan, assignors to Kabushiki Kaisha Toshiba, Kawasaki, Japan

Filed Dec. 22, 1995, Ser. No. 577,095

Claims priority, application Japan, Dec. 26, 1994, 6-322065

Int. Cl.^{6} G02B *5/20*

U.S. Cl. 430—27 **14 Claims**

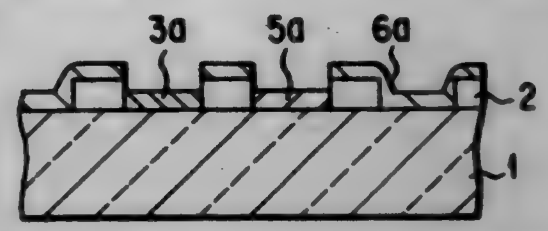

1. A method of manufacturing a display screen provided with a filter pattern comprising a first pigment pattern and a second pigment pattern, which comprises the steps of;

forming a first pigment layer by coating a solution containing a first pigment on a surface of a substrate and drying the resultant coated layer;

forming a first pigment pattern by subjecting said first pigment layer to a patterned light exposure and developing the resultant exposed pattern;

forming a second pigment layer by coating a solution containing a second pigment on the surface of the substrate including a surface of said first pigment pattern; and

forming a second pigment pattern by selectively removing, through rinsing, a portion of said second pigment which is disposed on said first pigment pattern;

an adhesion regulating agent being contained in at least either one of said solution containing a first pigment and said solution containing a second pigment.

5,700,610

TIME MODULATED STOCHASTIC SCREENING

Jacobus Bosschaerts, Mortsel; René Govaert, Kapellen, and Paul Delabastita, Antwerp, all of Belgium, assignors to Agfa-Gevaert N.V., Mortsel, Belgium

Filed Mar. 20, 1996, Ser. No. 618,681

Claims priority, application European Pat. Off., Mar. 22, 1995, 95200713.6

Int. Cl.^{6} G03F *7/07;7/20;* **G03C** *5/08*

U.S. Cl. 430—30 **8 Claims**

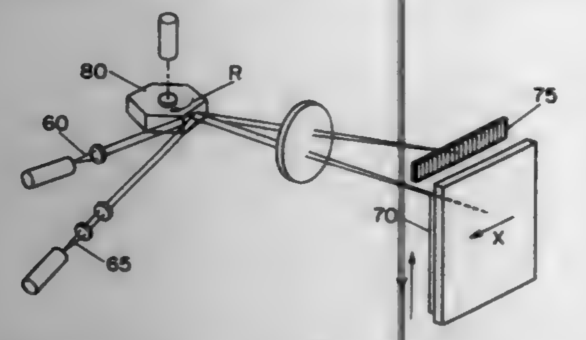

1. A method for generating a screened reproduction of a multiple tone image comprising the steps of:

frequency modulation screening said multiple tone image to obtain screened data representing tones of said multiple tone image in terms of halftones dots;

reproducing said halftone dots on an imaging element by means of a scanwise exposure;

wherein said scanwise exposure for rendering a halftone is time modulated by altering an exposure time for rendering halftone dots of low tones in one sense relative to halftone dots of mid tones, and altering an exposure time for rendering halftone dots of high tones in an opposite sense.

5,700,611

METHOD FOR FORMING OVERLAPPING TONER IMAGES

Michael T. Regan, Fairport, and Peter S. Alexandrovich, Rochester, both of N.Y., assignors to Eastman Kodak Company, Rochester, N.Y.

Filed Dec. 7, 1995, Ser. No. 568,772

Int. Cl.^{6} G03G *13/01*

U.S. Cl. 430—45 **14 Claims**

1. A method of forming a combined toner image comprising:

a. uniformly charging an image surface of an imaging member, which imaging member includes at least one photoelectrically sensitive layer,

b. exposing said photoelectrically sensitive layer to radiation according to first image information to form a first electrostatic image, with first pixels of more than two different charge levels,

c. applying a first electrostatically charged dry toner to said electrostatic image to create a first toner image of varying density on said image surface,

exposing said photoelectrically sensitive layer from a side of said layer opposite the image surface to radiation according to second image information to form a second electrostatic image with second pixels of more than two different charge levels, and

e. applying a second electrostatically charged dry toner to said second electrostatic image to form a second toner image of varying density, which first and second toner images overlap to form a combined toner image of varying density,

wherein in step d, exposures for forming said second electrostatic image overlaps with the first toner image and the amount of exposure for second pixels is adjusted in response to first image information regarding respective density of first pixels to improve development of the second toner image and offset the affects of space charge of the first toner image in development of the second toner image.

5,700,612

METHOD FOR PREPARATION OF PRINTING PLATE BY ELECTROPHOTOGRAPHIC PROCESS

Eiichi Kato; Yusuke Nakazawa, and Kazuo Ishii, all of Shizuoka, Japan, assignors to Fuji Photo Film Co., Ltd., Kanagawa, Japan

Filed Jun. 11, 1996, Ser. No. 661,723

Claims priority, application Japan, Jun. 12, 1995, HEI 7-144885

Int. Cl.^{6} G03G *13/26*

U.S. Cl. 430—49 **30 Claims**

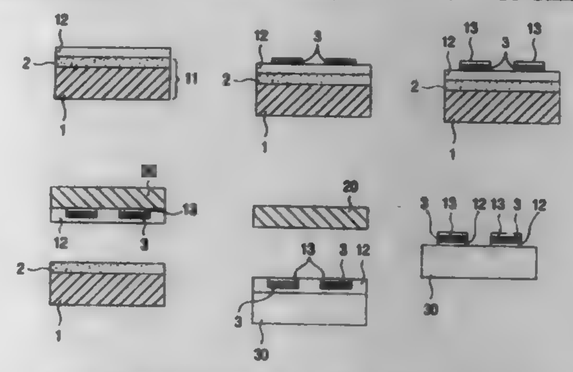

1. A method for preparation of a printing plate by an electrophotographic process comprising providing a peelable transfer layer (T) containing a resin (A) capable of being removed upon a chemical reaction treatment on an electrophotographic light-sensitive element, forming a toner image on the transfer layer by an electrophotographic process, providing an adhesive layer (M) containing a thermoplastic resin (B) only on the toner image, transferring the toner image together with the transfer layer (T) and the adhesive layer (M) from the electrophotographic light-sensitive element to a primary receptor, transferring the toner image together with the transfer layer (T) and the adhesive layer (M) from the primary receptor to a receiving material having a surface capable of providing a hydrophilic surface suitable for lithographic printing at the time of printing, and then removing the transfer layer (T) in the non-image portion on the receiving material by the chemical reaction treatment.

5,700,613

PHOTOCONDUCTOR FOR ELECTROPHOTOGRAPHY

Sumitaka Nogami; Michihiro Kitazawa, and Katsuhiro Sato, all of Kawasaki, Japan, assignors to Fuji Electric Co., Ltd., Kawasaki, Japan

Filed Jan. 11, 1996, Ser. No. 586,465

Claims priority, application Japan, Jan. 11, 1995, 7-002362

Int. Cl.^{6} G03G *5/14*

U.S. Cl. 430—58 **6 Claims**

1. A photoconductor for electrophotography, comprising:

a conductive substrate;

an undercoating layer formed on the conductive substrate;

a charge generation layer formed on the undercoating layer; and

a charge transport layer formed on the charge generation layer,

wherein the undercoating layer comprises a coating film containing as the main constituent thereof an addition compound containing iodine added thereto, and

wherein the charge generation layer comprises a P-type charge generation material containing iodine added thereto.

5,700,614

CYCLOPENTADIENE DERIVATIVE COMPOUNDS AND ELECTROPHOTOGRAPHIC PHOTOCONDUCTOR COMPRISING ONE CYCLOPENTADIENE DERIVATIVE COMPOUND

Megumi Kawahara, Yokohama; Ikuko Yamada, Kawasaki; Masayuki Shoshi, Yokohama, and Akio Kojima, Mitaka, all of Japan, assignors to Ricoh Company, Ltd., Tokyo, Japan

Filed Mar. 2, 1995, Ser. No. 398,944

Claims priority, application Japan, Mar. 3, 1994, 6-033617; Mar. 10, 1994, 6-039934

Int. Cl.^{6} G03G *5/047;5/06;5/09*

U.S. Cl. 430—59 **12 Claims**

1. An electrophotographic photoconductor comprising an electroconductive support and a photoconductive layer formed thereon comprising at least one cyclopentadiene derivative compound represented by a formula:

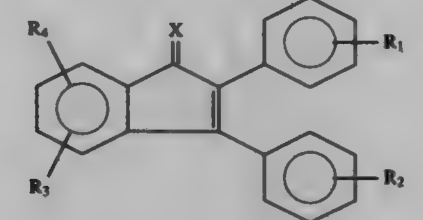

wherein R_1, R_2, R_3 and R_4 independently represent a hydrogen atom, a halogen atom, a cyano group, a nitro group, or an alkyl group which may have a substituent,

wherein X represents:

a substitution group of a formula =C—[A][B] wherein A and B independently represent a halogen atom, a cyano group, an aromatic group which may have a substituent, or a group —$COOR_6$ wherein R_6 represents an alkyl group which may have a substituent, or an aromatic group which may have a substituent; or

a substitution group of a formula =N—R_5 where R_5 represents a cyano group, an alkyl group which may have a substituent, or an aromatic group which may have a substituent.

5,700,615

COATED CARRIER PARTICLES

Scott M. Silence, Fairport; John A. Creatura, Ontario; Bing R. Hsieh; Ronald F. Ziolo, both of Webster, and Richard W. Ellis, Rochester, all of N.Y., assignors to Xerox Corporation, Stamford, Conn.

Filed Jan. 21, 1997, Ser. No. 785,675

Int. Cl.^{6} G03G *9/107;9/113*

U.S. Cl. 430—106.6 **28 Claims**

1. A carrier consisting essentially of a core and thereover a mixture of a first and second polymer, and wherein said first polymer contains a conductive component different from copper iodide, and said second polymer contains copper iodide, and wherein said copper iodide is present in the amount of from about 80 to about 95 weight percent based on the amount of said second polymer and said iodide.

2. A carrier in accordance with claim 1 wherein the copper iodide is cuprous iodide present in an amount of from about 80 to about 95 weight percent based on the amount of said second polymer and said iodide, and there results carrier particles.

9. A carrier in accordance with claim 2 wherein said core is a ferrite.

5,700,616

DEVELOPER FOR DEVELOPING AN ELECTROSTATIC IMAGE AND IMAGE FORMING METHOD

Takashige Kasuya, Soka; Osamu Tamura, Kawasaki; Hiroshi Yusa, Machida; Takakuni Kobori, Kawasaki, and Masaichiro Katada, Soka, all of Japan, assignors to Canon Kabushiki Kaisha, Tokyo, Japan

Filed Jan. 31, 1996, Ser. No. 594,795

Claims priority, application Japan, Feb. 1, 1995, 7-015061; Sep. 20, 1995, 7-264624

Int. Cl.^{6} G03G *9/097*

U.S. Cl. 430—110 **38 Claims**

1. A developer for developing an electrostatic image which comprises a toner comprising a particulate toner, a particulate silica A and a particulate silica B, the toner having a weight-average particle size of not larger than 12.0 μm and a particle-number distribution showing not more than 50% of toner particles not larger than 4.0 μm in particle size and not more than 10% of toner particles not smaller than 10.08 μm in particle size, each of the toner particles being formed of a toner composition comprising at least a polymer component and a charge controlling agent, the particulate silica A being composed of silicone oil-treated silica particles and having an average particle size of not larger than 0.1 μm, the particulate silica B being composed of silicone oil-treated silica particles and having an average particle size of 0.5 to 50 μm and a particle-number distribution showing not more than 50% of silica particles not larger than 1.0 μm in particle size and not more than 10% of silica particles not smaller than 100 μm in particle size, the particulate silica A and particulate silica B meeting the following requirements,

(a) the average particle size D_B of the particulate silica B is 10 times or more larger than the average particle size D_A of the particulate silica A,

(b) the silicone oil amount W_B used to treat the particulate silica B is twice or more larger than the silicone oil amount W_A used to that the particulate silica A, and

(c) the particulate silica A is added in an amount 3 times or more larger than the particulate silica B with respect to the toner particles (based on weight).

5,700,617

TONER FOR DEVELOPING ELECTROSTATIC IMAGES AND CHARGE-CONTROLLING AGENT

Tsuyoshi Takiguchi, Kawasaki; Kenji Okado, Yokohama; Masaaki Taya, Kawasaki; Ryoichi Fujita, Tokyo; Makoto Kanbayashi, Kawasaki; Wakashi Iida, Tokyo, and Tetsuya Ida, Kawasaki, all of Japan, assignors to Canon Kabushiki Kaisha, Tokyo, Japan

Filed Oct. 8, 1996, Ser. No. 727,219

Claims priority, application Japan, Oct. 12, 1995, 7-289228

Int. Cl.^{6} G03G *9/097;* **H01B** *1/00;1/06*

U.S. Cl. 430—110 **43 Claims**

1. A toner for developing an electrostatic image, comprising toner particles containing a binder resin, a colorant, and a charge-controlling agent;

wherein the charge-controlling agent comprises an aromatic oxycarboxylic acid, a metal compound of the aromatic oxycarboxylic acid, and an inorganic compound formed from an inorganic anion and an inorganic cation, and

the aromatic oxycarboxylic acid, the metal compound of the aromatic carboxylic acid and the inorganic anion are contained in proportions of A (wt. B (wt. %) and C (ppm), respectively, satisfying the following conditions:

$$1/99 \leqq A/B \leqq 20/80,$$

and

$$10^2 \leqq C.$$

5,700,618

PROCESS FOR THE PRODUCTION OF COLORED IMAGES BY AN ELECTROPHOTOGRAPHIC ROUTE

Raimund Josef Faust, Wiesbaden, and Silvia Lutz, Mainz, both of Germany, assignors to Agfa-Gevaert AG, Leverkusen, Germany

Filed Dec. 27, 1995, Ser. No. 579,434
Claims priority, application Germany, Dec. 29, 1994, P 44 47 104.1
Int. Cl.^{6} G03G *13/16*
U.S. Cl. 430—124 **18 Claims**

1. A process for the production of a colored image by an electrophotographic route, comprising

electrostatic charging, imagewise exposing to light, and toner treating of a photoconductor material to give a toner image,

transfer of the toner image onto a colored layer that is soluble in a solvent and that is on a carrier layer,

fixing of the toner image onto the colored layer, and

removal from the colored layer of the areas not covered by the toner image by washing out with a solvent,

wherein the toner comprises a colorless transparent toner which includes a colorless polymeric binder and a colorless polymeric charge control agent.

5,700,619

ACETAL POLYMERS AND USE THEREOF IN PHOTOSENSITIVE COMPOSITIONS AND LITHOGRAPHIC PRINTING PLATES

Harald Baumann, Osterode; Udo Dwars, Herzberg; Celin Savariar-Hauck, Badenhausen, and Hans-Joachim Timpe, Osterode, all of Germany, assignors to Sun Chemical Corporation, Fort Lee, N.J.

Filed Jul. 3, 1996, Ser. No. 675,024
Claims priority, application Germany, Jul. 7, 1995, 195 24 851.1
Int. Cl.^{6} G03F *7/021*
U.S. Cl. 430—175 **4 Claims**

1. A photosensitive composition comprising:

(i) a diazonium polycondensation product or a free radical polymerizable system consisting of photoinitiators and free radical polymerizable components or a hybrid system consisting of a diazonium polycondensation product and a free radical polymerizable system consisting of photoinitiators and free radical polymerizable components, and

(ii) a binder

containing the units A, B, C, D and E, wherein A is present in an amount of 10 to 60 mole % and is of the formula

$$-CH_2-\underset{\displaystyle OH}{\underset{|}{CH}}-, \qquad (A)$$

B is present in an amount of 1 to 30 mole % and is of the formula

$$-CH_2-\underset{\displaystyle OCOR^2,}{\underset{|}{CH}}- \qquad (B)$$

C is present in an amount of 5 to 60 mole % and is of the formula

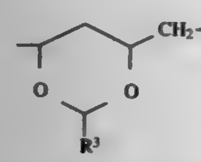

(C)

D is present in an amount of 0 to 60 mole % and is of the formula

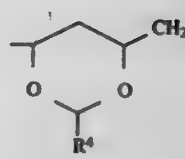

(D)

E is present in an amount of 1 to 40 mole % and is of the formula

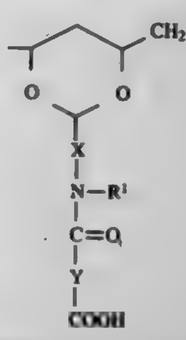

(E)

wherein X is an aliphatic, aromatic or araliphatic spacer group, R^1 is hydrogen or an aliphatic, aromatic or araliphatic group, R^2, R^3 and R^4 are hydrogen or alkyl groups with carbon numbers of from 1 to 18 and Y is a saturated or unsaturated chain- or ring-shaped spacer group.

5,700,620

RADIATION RAY SENSITIVE RESIN COMPOSTION CONTAINING AT LEAST TWO DIFFERENT NAPHTHOQUINONEDIAZIDE SULFONIC ACID ESTERS AND AN ALKALI-SOLUBLE LOW-MOLECULAR COMPOUND

Shinji Sakaguchi; Toshiaki Aoai, and Kenichiro Sato, all of Shizuoka, Japan, assignors to Fuji Photo Film Co., Ltd., Kanagawa, Japan

Continuation of Ser. No. 362,924, Dec. 23, 1994, abandoned.
This application Jul. 8, 1996, Ser. No. 676,917
Claims priority, application Japan, Dec. 24, 1993, 5-346008
Int. Cl.^{6} G03F *7/023*
U.S. Cl. 430—191 **5 Claims**

1. A radiation ray sensitive resin composition comprising a water-insoluble, alkali-soluble resin, a water-insoluble, alkali-soluble low-molecular compound and a radiation ray sensitive component, wherein 50% or more of said radiation ray sensitive component is, a mixture composed of (A) at least one naphthoquinonediazide sulfonic acid diester of water-insoluble, alkali-soluble low-molecular compounds having three and/or four phenolic hydroxyl groups of the following formulae (A1) to (A4) and (B) a naphthoquinonediazide sulfonic acid ester of a water-insoluble, alkali-soluble low-molecular compound having from 5 to 7 phenolic hydroxyl groups of the following general formula (B1), wherein said ester (B) is obtained by esterification reaction of a naphthoquinonediazide sulfonic acid with a water-insoluble, alkali-soluble low-molecular compound having from 5 to 7 phenolic hydroxyl groups and having the proportion of the naphthoquinonediazide sulfonyl groups in all hydroxyl groups of from 10 to 60%:

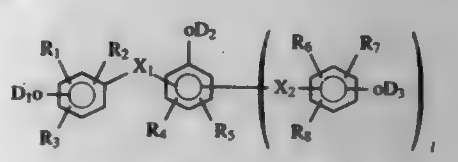

(A1)

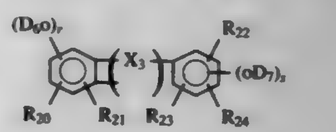

(A2)

-continued

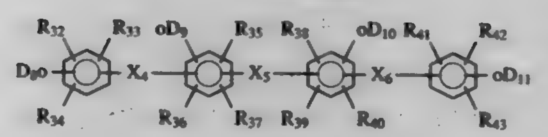

(A3)

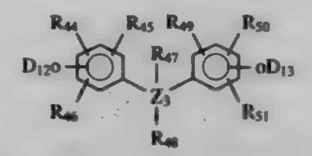

(A4)

wherein;

R_1 to R_8 and R_{20} to R_{24} each represent a hydrogen atom, —CN, —X—R_{a1} or a halogen atom;

X_1 and X_2 each represent a single bond, a carbonyl group, a sulfido group, a sulfonyl group, or —C(R_{b1})(R_{b2})—; provided that, when 1 is 0, then X_1 represents a group of the following general formula (A_{11}) or (A_{12}):

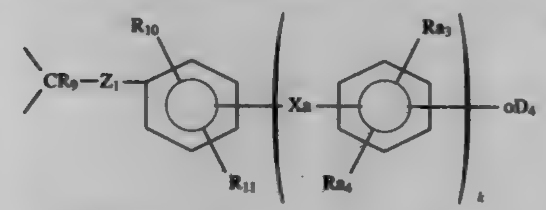

(A_{11})

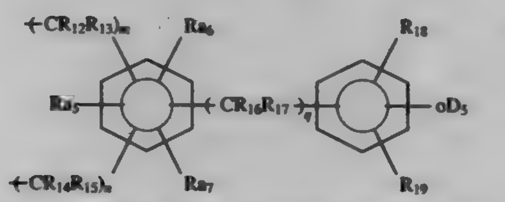

(A_{12})

X_3 represents a group of the following general formula (A_{21}) or (A_{22}):

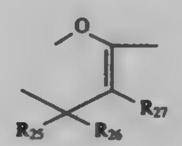

(A_{21})

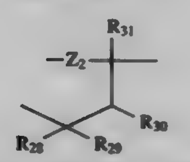

(A_{22})

R_9, R_{12} to R_{17}, R_{25} to R_{31}, R_{b1} and R_{b2} each represent a hydrogen atom, a methyl group, an ethyl group, or a haloalkyl group having one or two carbon atoms;

R_{b1} and R_{b2}; R_{25} and R_{26}; R_{28} and R_{29}; and R_{30} and R_{31} each may be bonded to each other to form an alicyclic hydrocarbon residue;

R_{10}, R_{11}, R_{a3}, R_{a4}, R_{18} and R_{19} each represent a hydrogen atom, —X—R_{a1}, —CN or a halogen atom;

X represents a single bond, —O—, —S—, —CO—, —OCO—, or —N(R_{a1})—CO—;

Xa represents a carbonyl group, a sulfido group, a sulfonyl group, or —C(R_{b1})(R_{b2})—;

R_{a1} represents an alkyl, aryl or aralkyl group having from 1 to 10 carbon atoms;

Z_1 represents a single bond, or it is bonded to CR_9 to form a tri-valent alicyclic hydrocarbon residue;

Z_2 represents a single bond, or —O—;

k and 1 each represent 0 or 1;

m and n each represent 1 or 2;

q represents an integer of from 1 to 8;

r and s each represent 1 or 2, provided that (r+s) is 3;

D_1 to D_7 each represent a hydrogen atom, or a naphthoquinonediazido-4 or 5-sulfonyl group;

R_{32} to R_{46} and R_{49} each represent a hydrogen atom, —CN, —X—R_{a1}, or a halogen atom;

R_{47} represents a hydrogen atom, a methyl group, an ethyl group, a haloalkyl group having one or two carbon atoms, or Rc;

Rc represents a group of the following general formula (A_{41}):

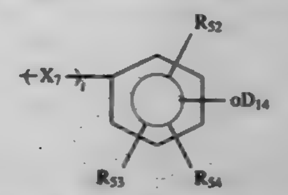

(A_{41})

R_{48} represents a hydrogen atom, a methyl group, an ethyl group, a haloalkyl group having one or two carbon atoms, or Rd;

Rd represents a group of the following general formula (A_{42}):

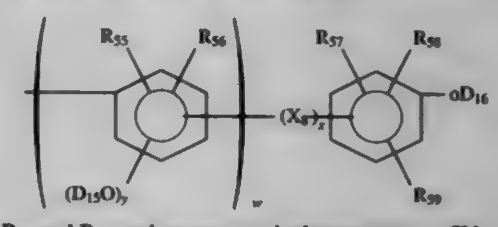

(A_{42})

R_{50} and R_{51} each represent a hydrogen atom, —CN, —X—R_{a1}, or a halogen atom; provided that, when R_{47}≠c and is Rd, then they each are Rc;

X_4 to X_6 each represent a single bond, a carbonyl group, a sulfido group, a sulfonyl group, or —C(R_{b1})(R_{b2})—;

X_7 and X_8 each represent a single bond, or a group of —($CR_{160}R_{61}$)$_u$(CH=CH)$_v$;

R_{52} to R_{59} and R_{a5} to R_{a7} each represent a hydrogen atom, —CN, —X—R_{a1}, or a halogen atom;

R_{60} and R_{61} each represent a hydrogen atom, a methyl group, an ethyl group, or a haloalkyl group having one or two carbon atoms;

Z_3 represents a tetra-valent alkyl residue having from 1 to 6 carbon atoms;

D_8 to D_{16} each represent a hydrogen atom, or a naphthoquinonediazido-4 or 5-sulfonyl group;

t represents 0 or an integer of 1 or 2;

u and x each represent 0 or an integer of from 1 to 8;

y, v and w each represent 0 or 1; provided that, when R_{47}≠Rc and R_{50}≠Rc and R_{51}≠Rc, then y=1 and w=1, while in the other cases, y=0; and

two of D_1 to D_{16} are naphthoquinonediazido-4 or 5-sulfonyl groups in one molecule of each of these radiation ray sensitive compounds of formulae (A1) to (A4):

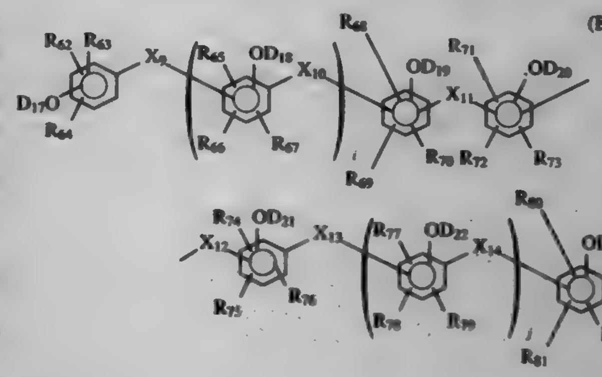

(B1)

wherein;

R_{62} to R_{82} each represent a hydrogen atom, —CN, —X—R_{a1}, or a halogen atom;

X_9 to X_{14} each represent a single bond, a carbonyl group, a sulfido group, a sulfonyl group, or a group of —C(R_{b1})(R_{b2})—;

D_{17} to D_{23} each represent a hydrogen atom, or a naphthoquinonediazido-4 or 5-sulfonyl group;

R_{a1} represents an alkyl, aryl or aralkyl group having from 1 to 10 carbon atoms;

R_{b1} and R_{b2} each represents a hydrogen atom, a methyl group, an ethyl group, or a haloalkyl group having one or two carbon atoms; and R_{b1} and R_{b2} may be bonded to each other to form an alicyclic residue; and

i and j each represent 0 or 1.

5,700,621

POLYMERS AND PHOTOSENSITIVE MIXTURE PREPARED THEREWITH

Mathias Eichhorn, Niedernhausen, and Andreas Elsaesser, Idstein, both of Germany, assignors to Agfa-Gevaert AG, Leverkusen, Germany

Filed Feb. 28, 1996, Ser. No. 607,809

Claims priority, application Germany, Mar. 4, 1995, 195 07 618.4

Int. Cl.^{6} G03C *1/52;* **C08F** *20/54*

U.S. Cl. 430—192 **16 Claims**

1. A polymer comprising:

repeating units of formula I:

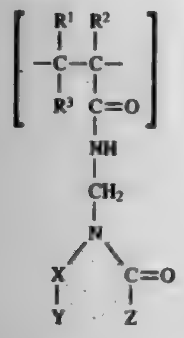

(I)

wherein

R^1, R^2 and R^3 are, independently of one another, hydrogen atoms or alkyl groups,

X is CO or SO_2, and

Y and Z are, independently of one another, alkyl, alkenyl, cycloalkyl, aryl, or heterocyclic radicals, or Y and Z are linked to one another and are constituents of a five-membered or six-membered heterocyclic ring; and

units containing acidic hydrogen atoms which are derived from sulfonic, carboxylic or phosphonic acids, sulfonamides, sulfonimides or carboximides or phenols.

5,700,622

PLATEMAKING PROCESS WITH HEAT DEVELOPABLE SILVER SALT DIFFUSION TRANSFER

Hiroyuki Hirai, and Yuji Mihara, both of Kanagawa, Japan, assignors to Fuji Photo Film Co., Ltd., Kanagawa, Japan

Filed May 10, 1996, Ser. No. 644,482

Claims priority, application Japan, May 12, 1995, HEI 7-137450; May 12, 1995, HEI 7-137510

Int. Cl.^{6} G03C *8/40;8/52;* **G03F** *7/07*

U.S. Cl. 430—203 **2 Claims**

1. A process for producing a lithographic printing plate which comprises:

image-wise exposing a silver halide photosensitive material comprising a support having thereon at least a photosensitive silver halide, a binder, and a substantially water-insoluble basic metal compound and having a physical-development nucleus layer on the external surface thereof;

superposing the silver halide photosensitive material either after or simultaneously with the image-wise exposure on a sheet which contains a complex-forming compound capable of forming a complex with the metal ion contained in the basic metal compound and a silver halide solvent, in such a manner that the coating side of the photosensitive material is in contact with the coating side of the sheet;

heating the superposed materials in the presence of a reducing agent and water;

subsequently separating the sheet from the photosensitive material to form a silver image on the physical-development nucleus layer by means of silver salt diffusion transfer; and

utilizing the silver image as an ink-receptive area.

5,700,623

THERMALLY STABLE PHOTOGRAPHIC BAR CODE LABEL CONTAINING AN ANTISTATIC LAYER

Charles C. Anderson, Penfield; Lawrence J. Steinwachs, and Gary W. Schum, both of Rochester, all of N.Y., assignors to Eastman Kodak Company, Rochester, N.Y.

Filed Jan. 21, 1997, Ser. No. 786,512

Int. Cl.^{6} G03C *1/805*

U.S. Cl. 430—256 **24 Claims**

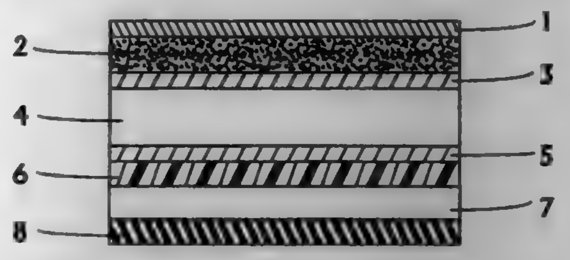

1. A bar code label comprising:

an opaque polymer film substrate having a first side and a second side;

a first primer layer superposed on the first side of said opaque polymer film substrate;

a light-sensitive silver halide photographic emulsion layer superposed on said first primer layer comprising silver halide grains, a hydrophilic colloid, a polymer latex, and a hardener;

an overcoat layer superposed on said light-sensitive silver halide photographic emulsion layer comprising a hydrophilic colloid and an image stabilizer;

a second primer layer superposed on the second side of said opaque polymer film;

an antistatic layer superposed on said second primer layer comprising a polymeric binder and an antistatic agent;

a pressure-sensitive adhesive layer superposed on said antistatic layer;

a removable release sheet superposed on said pressure-sensitive adhesive layer.

5,700,624

POSITIVE ACID CATALYZED RESISTS HAVING AN ALKALI SOLUBLE RESIN WITH ACID LABILE GROUPS AND INERT BLOCKING GROUPS

James W. Thackeray, Braintree; Roger F. Sinta, Woburn; Mark D. Denison, Cambridge, and Sheri L. Ablaza, Brookline, all of Mass., assignors to Shipley Company, L.L.C., Marlborough, Mass.

Filed May 9, 1995, Ser. No. 438,180

Int. Cl.^{6} G03F *7/021;7/023;7/039;* **G03C** *1/72*

U.S. Cl. 430—270.1 **13 Claims**

1. A positive acting photoresist composition comprising the combination of an alkali soluble novolak resin binder having pendant phenolic hydroxyl groups, pendant inert blocking groups and pendant acid labile groups and a photoacid generator that generates an acid upon exposure to activating radiation, said resin binder having been formed by reacting a minor portion of its pendant hydroxyl groups to form sulfonic acid ester groups inert to photogenerated acid and an additional minor portion of its pendant hydroxyl groups to form acid labile groups that cleave upon exposure to photogenerated acid, said photoacid generator being present in an amount whereby sufficient acid is generated exposure to activating radiation of sufficient strength to cleave the pendant acid labile groups causing said resin binder to become soluble in aqueous alkali solution.

7. A positive acting photoresist composition comprising the combination of an alkali soluble novolak resin binder having phenolic groups and cyclic alcohol groups, each having pendant phenolic hydroxyl groups, pendant inert blocking groups and pendant acid labile groups; and a photoacid generator that generates an acid upon exposure to activating radiation, said resin binder having been formed by reacting a minor portion of its pendant hydroxyl groups to form acid ester groups inert to photogenerated acid and an additional minor portion of its pendant hydroxyl groups to form acid labile groups that cleave upon exposure to photogenerated acid, said photoacid generator being present in an amount whereby sufficient acid is generated upon exposure to activating radiation of sufficient strength to cleave said pendant acid labile groups causing said resin binder becomes soluble in aqueous alkali solution.

5,700,625

NEGATIVE-WORKING PHOTORESIST COMPOSITION

Mitsuru Sato; Katsumi Oomori, both of Yokohama; Kiyoshi Ishikawa, Kanagawa-ken; Etsuko Iguchi, Machida, and Fumitake Kaneko, Hiratsuka, all of Japan, assignors to Tokyo Ohka Kogyo Co., Ltd., Kawasaki, Japan

Filed Apr. 10, 1996, Ser. No. 630,621

Claims priority, application Japan, Apr. 19, 1995, 7-093974

Int. Cl.^{6} G03F *7/038*

U.S. Cl. 430—270.1 **4 Claims**

1. A chemical-sensitization negative-working photoresist composition which comprises, as a uniform blend:

(a) 100 parts by weight of a resin selected from the group consisting of a poly(hydroxystyrene) resin, a copolymeric resin of a hydroxystyrene monomer and a comonomer selected from the group consisting of styrene, β-methylstyrene, 4-methylstyrene, 2-methylstyrene, 4-methoxystyrene and 4-chlorostyrene, wherein the molar fraction of hydroxystyrene units in said copolymeric resin is at least 70% and combinations of said poly(hydroxystyrene) resin and said copolymeric resin, said resins having a weight-average molecular weight in the range from 2,000 to 25,000 and having such a dispersion of the molecular weight distribution that the ratio of the weight-average molecular weight M_w to the number-average molecular weight M_n does not exceed 1.4;

(b) from 0.5 to 20 parts by weight of a compound capable of releasing an acid by irradiation with actinic rays; and

(c) from 3 to 70parts by weight of a crosslinking agent, the resin as the component (a) being substantially free from unpolymerized monomers and oligomers having a molecular weight smaller than 1,000.

5,700,626

METHOD FOR FORMING MULTI-LAYER RESIST PATTERN

Jun Seok Lee; Hun Hur, and Young Jin Song, all of Seoul, Rep. of Korea, assignors to LG Semicon Co., Ltd., Chungcheongbuk-do, Rep. of Korea

Continuation of Ser. No. 200,766, Feb. 23, 1994, abandoned. This application Jul. 1, 1996, Ser. No. 673,476

Claims priority, application Rep. of Korea, Jan. 12, 1994, 429/1994

Int. Cl.^{6} G03F *7/00*

U.S. Cl. 430—296 **9 Claims**

1. A method for forming a multi-layer resist pattern, comprising the steps of:

forming at least one primary alignment mark on a silicon substrate adjacent a cell part including a plurality of cell patterns having steps;

depositing a lower film over said silicon substrate;

coating a lower resist film over said lower film;

subjecting said lower resist film to a light exposure and development step, thereby forming at least one secondary alignment mark;

forming an intermediate insulating layer over said lower resist film;

implanting positive ions in said intermediate insulating layer such that the surface of the intermediate insulating layer is charged with said positive ions, so as to prevent an occurrence of a charge-up effect in exposure to electron beams;

coating an upper resist film over said intermediate insulating layer, thereby forming a multi-layer resist film;

subjecting said upper resist film to a light exposure step, thereby forming a latent image pattern at an exposed portion of said upper resist film;

subjecting the resulting structure to a silylation step, thereby forming a silylation layer at said upper resist film;

etching said upper resist film to form an upper resist pattern and removing said silylation layer;

patterning the intermediate insulating layer by using said upper resist pattern as a mask to form a patterned intermediate insulating layer; and

etching said lower resist film by using said patterned intermediate insulating layer as a mask,

wherein said etching of each said upper and lower resist films is carried out by a direct writing of electron beams.

5,700,627

DEVICE FOR THE INSOLATION OF MICROMETRIC AND/OR SUBMICROMETRIC AREAS IN A PHOTOSENSITIVE LAYER AND A METHOD FOR THE CREATION OF PATTERNS IN SUCH A LAYER

Michel Ida, Voreppe, and Robert Baptist, Jarrie, both of France, assignors to Commissariat a l'Energie Atomique, Paris, France

Filed Aug. 14, 1996, Ser. No. 696,716

Claims priority, application France, Aug. 17, 1995, 95 09878

Int. Cl.^{6} G03C *5/00*

U.S. Cl. 430—311 **14 Claims**

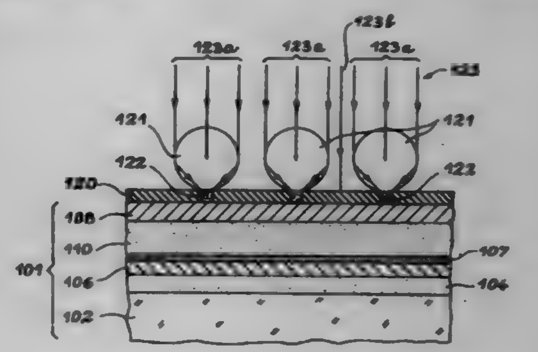

1. A method of producing micrometric or submicrometric patterns in a layer of photosensitive material positioned on a substrate comprising the steps of:

subjecting the layer to an atmosphere containing liquid that does not wet the photosensitive material in a manner that produces a monolayer of micro-droplets of the non-wetting liquid on this layer, the photosensitive material layer being kept at a temperature sufficiently low to prevent the coalescence of the micro-droplets with one another,

insolating the layer of photosensitive material through the monolayer of micro-droplets to selectively print areas of exposure of the photosensitive layer with an insolation light,

removing the micro-droplets,

developing the layer of photosensitive material to form micrometric or submicrometric patterns in accordance with the areas of exposure.

wherein the non-wetting liquid is transparent to the insolation light, each micro-droplet focusing the light in said areas of exposure.

5,700,628

DRY MICROLITHOGRAPHY PROCESS

Mehrdad M. Moslehi, Los Altos, Calif., assignor to Texas Instruments Incorporated, Dallas, Tex.

Continuation of Ser. No. 426,829, Apr. 21, 1995, abandoned, which is a division of Ser. No. 250,691, May 31, 1994, Pat. No. 5,460,693. This application Jan. 15, 1997, Ser. No. 783,686

Int. Cl.⁶ G03F *7/20;7/26;7/36*

U.S. Cl. 430—313 **10 Claims**

1. A method for dry lithography processing of semiconductor wafers, comprising the steps of;

depositing a fluorinated photosensitive layer on said wafer; and

patterning said fluorinated photosensitive layer using a dry development step, wherein said patterning step comprises exposing portions of said fluorinated photosensitive layer to radiant energy, wherein exposed areas and unexposed areas are formed in said fluorinated photosensitive layer, wherein said radiant energy is deep ultraviolet energy.

5,700,629

DEVELOPING PROCESS

Hajime Kakumaru, Hitachi, Japan, assignor to Hitachi Chemical Company, Ltd., Tokyo, Japan

Continuation of Ser. No. 469,788, Jun. 6, 1995, abandoned, which is a continuation of Ser. No. 66,401, May 11, 1993, abandoned, which is a continuation of Ser. No. 656,464, Feb. 19, 1991, abandoned. This application May 20, 1996, Ser. No. 650,944

Claims priority, application Japan, Feb. 19, 1990, 2-38144

Int. Cl.⁶ G03F *7/30*

U.S. Cl. 430—325 **18 Claims**

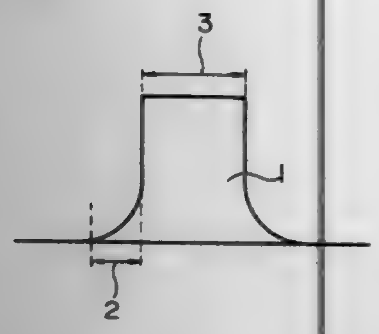

1. A process for developing an image-wise exposed photosensitive material which comprises contacting a surface of the photosensitive material comprising a photo resist in the surface of a printed circuit board or a relief in a printing plate, with a developing solution by immersion or by spraying, while jetting a gas at a pressure of 0.1 to 6 kgf/cm^2 and at the surface of the photosensitive material so as to remove any narrow portions by the development and so as not to dry a developing surface during development of image whereby the image developed has improved resolution with a wall vertical to a substrate.

5,700,630

SILVER HALIDE PHOTOGRAPHIC MATERIAL AND METHOD FOR PROCESSING THE SAME

Rikio Inoue, and Sumito Yamada, both of Kanagawa, Japan, assignors to Fuji Photo Film Co., Ltd., Kanagawa, Japan

Filed Mar. 1, 1996, Ser. No. 609,282

Claims priority, application Japan, Mar. 3, 1995, HEI 7-44006; Mar. 30, 1995, HEI 7-73720.

Int. Cl.⁶ G03C *1/83;1/34;5/16;5/31*

U.S. Cl. 430—399 **20 Claims**

7. A method for processing a silver halide photographic material with an automatic processor, which comprises imagewise exposing said silver halide photographic material to light and then developing said exposed silver halide photographic material with a developing solution containing (i) a developing agent represented by formula (I') and (ii) no hydroquinones, for 5 to 30 seconds:

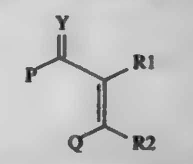

(I')

wherein R1 and R2 each represents a hydroxyl group, an amino group, a mercapto group or an alkylthio group; P and Q each represents a hydroxyl group, a carboxyl group, an alkoxyl group, a hydroxyalkyl group, a carboxyalkyl group, a sulfo group, a sulfoalkyl group, an amino group, an alkyl group or an aryl group, or P and Q each represents an atomic group necessary to form a 5- to 8-membered ring by connecting with each other together with two vinyl carbon atoms substituted with R1 and R2 and the carbon atom substituted with Y; Y represents ═O or ═N—R3; and R3 represents a hydrogen atom, a hydroxyl group, an alkyl group, an acyl group, a sulfoalkyl group or a carboxyalkyl group; wherein said silver halide photographic material comprising a support having thereon at least one light-sensitive silver halide emulsion layer containing silver halide grains, a surface protective layer as an uppermost layer, and a hydrophilic colloid layer other than said at least one light-sensitive silver halide emulsion layer and said surface protective layer, wherein the sum of the silver amount contained in each of said at least one light-sensitive silver halide emulsion layer is from 0.8 g/m^2 to 1.5 g/m^2 on one side of said support; said hydrophilic colloid layer other than said at least one light-sensitive silver halide emulsion layer and said surface protective layer contains a non-elusive solid fine grain dispersion dye represented by formula (I); and a mercapto compound represented by formula (II) is contained in at least one of any hydrophilic colloid layer:

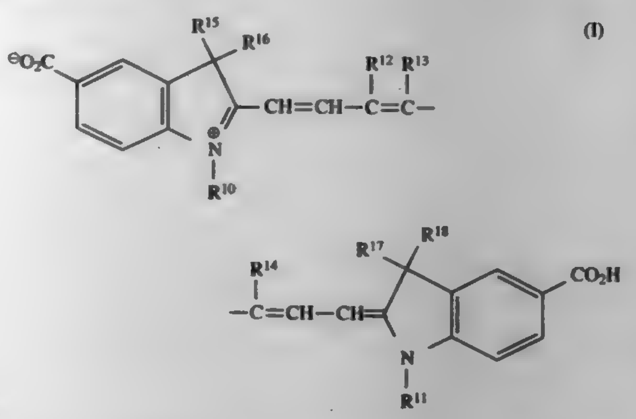

(I)

wherein R^{10} and R^{11} each represents an alkyl group, an aralkyl group or an alkenyl group; R^{12} and R^{14} each represents a hydrogen atom or an atomic group necessary to form a 5- or 6-membered ring by linking with each other; R^{13} represents an aryl group, —N(R^{19})(R^{20}), —SR^{21} or —OR^{22}; R^{19} represents a hydrogen atom, an alkyl group or an aryl group; R^{20} represents an aryl group, a sulfonyl group or an acyl group; R^{19} and R^{20} may be linked with each other to form a ring; R^{21} and R^{22} each represents an aryl group; and R^{15}, R^{16}, R^{17} and R^{18} each represents an alkyl

group, and R^{15} and R^{16}, and R^{17} and R^{18} may be linked with each other to form a ring;

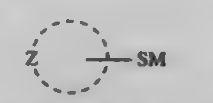

(II)

wherein Z represents a heterocyclic ring having at least one of —SO_3M, —$COOR_1$, —OH and —NHR_2 bonded directly or indirectly to said heterocyclic ring; M represents a hydrogen atom, an alkali metal atom, or a quaternary ammonium group or a quaternary phosphonium group; R_1 represents a hydrogen atom, an alkali metal atom, or an alkyl group having from 1 to 6 carbon atoms; R_2 represents a hydrogen atom, an alkyl group having from 1 to 6 carbon atoms, —COR_3, —$COOR_3$ or —SO_2R_3; R_3 represents a hydrogen atom, an aliphatic group or an aromatic group.

5,700,631

PHOTOGRAPHIC ELEMENT CONTAINING NEW GOLD(I) COMPOUNDS

Roger Lok, Rochester, and Weimar Weatherly White, Canaseraga, both of N.Y., assignors to Eastman Kodak Company, Rochester, N.Y.

Continuation-in-part of Ser. No. 616,016, Mar. 14, 1996, abandoned. This application Jun. 28, 1996, Ser. No. 672,254

Int. Cl.⁶ G03C *1/09;* **C07F** *1/12*

U.S. Cl. 430—605 **20 Claims**

1. A photographic element comprising a support having situated thereon a silver halide emulsion layer, said emulsion layer comprising a compound of the formula:

$$Z—SO_2S—Au(I)—L \qquad (I)$$

wherein

Z represents an alkyl, aryl, or heterocyclic group; and

L represents a thioether, selenoether or telluroether containing ligand.

5,700,632

GENERAL METHOD TO QUICKLY REMOVE CRYOPROTECTANTS FROM ANIMAL CELLS WHILE MAINTAINING VIABILITY

John K. Critser, Carmel, and D. Y. Gao, Indianapolis, both of Ind., assignors to Methodist Hospital of Indiana, Indianapolis, Ind.

Continuation-in-part of Ser. No. 250,675, May 27, 1994, Pat. No. 5,595,866. This application Jun. 7, 1995, Ser. No. 474,477

The portion of the term of this patent subsequent to May 27, 2014, has been disclaimed.

Int. Cl.⁶ A01N *1/02*

U.S. Cl. 435—2 **28 Claims**

1. A method to remove cryoprotectant from the cells of an animal species containing cryoprotectant comprising:

a) predetermining an upper cellular volume limit above which a user-defined fraction of cells lose their viability,

b) selecting a first concentration of cryoprotectant solution which is lower than that within the cells,

c) calculating whether said first concentration of cryoprotectant solution will cause the cells to exceed the upper cellular volume limit by a calculation which uses the water permeability coefficient and the cryoprotectant permeability coefficient of the cells, repeating steps b) and c) as necessary in order to calculate a predetermined concentration of cryoprotectant solution which will permit the decrease of the concentration of cryoprotectant in the cells while still maintaining the viability of a user-defined fraction of the cells,

d) contacting said cells containing cryoprotectant with the solution of the predetermined concentration of cryoprotectant.

5,700,633

Patent Not Issued For This Number

5,700,634

COAGULATION ASSAYS AND REAGENTS COMPRISING TANNIN OR PROPYL GALLATE AND A METAL ION

Roy E. Speck, Indianapolis, Ind., assignor to Analytical Control Systems, Inc., Fishers, Ind.

Division of Ser. No. 158,538, Nov. 29, 1993, Pat. No. 5,451,509, which is a division of Ser. No. 946,811, Sep. 16, 1992, abandoned, which is a continuation of Ser. No. 510,178, Apr. 17, 1990, abandoned. This application Jun. 7, 1995, Ser. No. 477,696

Int. Cl.⁶ C12Q *1/00;1/56;* **G01N** *33/86*

U.S. Cl. 435—4 **9 Claims**

1. A reagent for the activation of intrinsic coagulation, comprising (i) a phospholipid platelet substitute and (ii) a hydroxy-substituted aromatic compound selected from the group consisting of tannin and propyl gallate and (iii) a metal ion selected from the group consisting of Cu^{2+}, Cu^{1+}, Co^{2+}, Fe^{3+} and Ni^{2+}, in concentrations effective to cause coagulation, wherein the reagent gives an activated partial thromboplastin time value of less than about 40 seconds for normal plasma and an activated partial thromboplastin time value of at least about 200 seconds for normal plasma which contains 1 unit/ml heparin.

5,700,635

HIV-1 GAG CYTOTOXIC T-LYMPHOCYTE EPITOPE AND METHOD OF USE

Andrew James McMichael, Horton-cum-Studley, England; Douglas Fraser Nixon, Merton College, United Kingdom, and Alain Robert Michael Townsend, Oxford, England, assignors to United Biomedical, Inc., Hauppauge, N.Y.

Continuation of Ser. No. 100,204, Aug. 2, 1993, abandoned, which is a continuation of Ser. No. 829,070, Apr. 9, 1992, abandoned. This application Dec. 19, 1994, Ser. No. 359,000

Claims priority, application United Kingdom, Aug. 9, 1989, 8918200

Int. Cl.⁶ C12Q *1/70;* **G01N** *33/53;33/555;* **A61K** *38/00*

U.S. Cl. 435—5 **7 Claims**

6. A method of assaying a sample for the presence of HIV-specific cytotoxic T lymphocytes, said method comprising the following steps:

(i) obtaining and preparing a sample comprising peptide-specific CTL effector cells wherein said peptide has the sequence NH_2-asparagine-proline-proline-isoleucine-proline-valine-glycine-glutamate-isoleucine-tyrosine-lys ine-arginine-tryptophan-isoleucine-isoleucine-COOH;

(ii) obtaining and preparing labeled HLA class I matched target cells;

(iii) admixing the effector cells and target cells; and

(iv) determining the amount of label released by said target cells.

5,700,636

METHODS FOR SELECTIVELY DETECTING MICROORGANISMS ASSOCIATED WITH VAGINAL INFECTIONS IN COMPLEX BIOLOGICAL SAMPLES

Diane K. Sheiness, Bothell, Wash.; Trevor H. Adams, Buckinghamshire, England; Michael R. Stamm, Bothell, Wash.; Gerard A. Cangelosi, Seattle, Wash.; Theresa B. Britschgi, Seattle, Wash., and Connie K. Dix, Arlington, Wash., assignors to Becton Dickinson and Company, Franklin Lakes, N.J.

Continuation of Ser. No. 896,094, May 29, 1992, abandoned, which is a continuation-in-part of Ser. No. 600,334, Oct. 19, 1990, abandoned. This application Oct. 8, 1993, Ser. No. 133,598

Int. Cl.[6] C12Q *1/68;* **C07H** *21/04*

U.S. Cl. 435—6 **13 Claims**

1. A method for selectively detecting a prokaryotic microorganism and a eukaryotic microorganism in a single sample, the method comprising:

(a) lysing the cells of the prokaryotic microorganism and the eukaryotic microorganism by combining the sample with a lysis solution, thereby releasing nucleic acid from the prokaryotic and the eukaryotic microorganisms;

(b) contacting the nucleic acid released from the microorganisms, under hybridizing conditions, with a first oligonucleotide capture probe that selectively hybridizes to the nucleic acid of the prokaryotic microorganism, wherein said first oligonucleotide capture probe has a sequence selected from the group consisting of SEQ ID NOS: 1-7, 17–28, 30, 33–35, 42–47, 51 and 52 and a second oligonucleotide capture probe that selectively hybridizes to the nucleic acid of the eukaryotic microorganism, wherein said second oligonucleotide capture probe has a sequence selected from the group consisting of SEQ ID NOS: 13 and 48–50 to form a prokaryotic microorganism-capture probe hybridization complex and a eukaryotic microorganism-capture probe hybridization complex, respectively; and

(c) detecting the hybridization complexes as an indication of the presence of the prokaryotic microorganism and the eukaryotic microorganism in the sample.

5,700,637

APPARATUS AND METHOD FOR ANALYZING POLYNUCLEOTIDE SEQUENCES AND METHOD OF GENERATING OLIGONUCLEOTIDE ARRAYS

Edwin Southern, Oxford, England, assignor to Isis Innovation Limited, Oxford, England

Continuation of Ser. No. 695,682, May 3, 1991, abandoned, which is a continuation-in-part of Ser. No. 573,317, Sep. 28, 1990, abandoned. This application Apr. 19, 1994, Ser. No. 230,012

Claims priority, application United Kingdom, May 3, 1988, 8810400

Int. Cl.[6] C12Q *1/68;* **C07H** *21/00;21/02;21/04*

U.S. Cl. 435—6 **8 Claims**

1. A method for generating an array of oligonucleotides of chosen lengths within discrete cells of a support material comprising the steps of

a) segregating a support material into discrete cell locations;

b) coupling a nucleotide precursor to a first set of cell locations;

c) coupling a nucleotide precursor to a second set of cell locations;

d) coupling a nucleotide precursor to a third set of cell locations;

e) and continuing the sequence of coupling steps until the desired array has been generated,

the coupling being effected at each location either to the surface of the support or to a nucleotide coupled in a previous step at the location.

5,700,638

CELL DEATH REGULATOR

Stanley J. Korsmeyer, Clayton, Mo., assignor to Washington University, St. Louis, Mo.

Continuation-in-part of Ser. No. 112,208, Aug. 26, 1993, abandoned. This application May 25, 1994, Ser. No. 248,819

Int. Cl.[6] C12Q *1/68;* **G01N** *33/68;33/53;* **C12P** *21/02;* **C12N** *5/02;5/12;* **C07K** *14/475*

U.S. Cl. 435—6 **21 Claims**

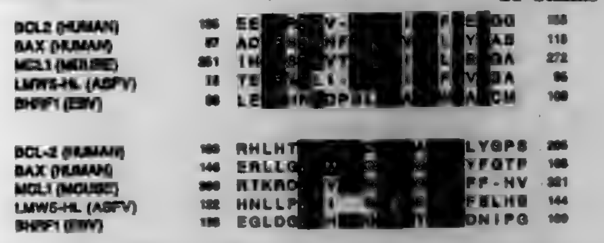

21. A method for identifying mutant bcl-2 proteins which substantially lack binding to Bax and/or substantially lack death repressor activity, said method comprising the steps of:

introducing a mutation into a bcl-2 polynucleotide encoding a bcl-2 polypeptide to produce a mutated bcl-2 polynucleotide, whereby said mutated bcl-2 polynucleotide encodes a mutant bcl-2 polypeptide comprising an amino acid substitution or deletion in a BH1 or BH2 domain;

expressing said mutant bcl-2 polypeptide in a mammalian cell which expresses Bax and which is capable of undergoing bcl-2-sensitive apoptosis;

determining whether expression of the mutant bcl-2 polypeptide inhibits death repressor activity of a bcl-2 protein endogenous to said mammalian cell and/or whether said mutant bcl-2 protein itself lacks death repressor activity and/or are incapable of providing inhibition of said bcl-2-sensitive apoptosis; and

identifying mutant bcl-2 proteins which inhibit endogenous bcl-2 death repressor activity and/or which are incapable of providing inhibition of said bcl-2-sensitive apoptosis as being bcl-2 proteins which lack binding to Bax and/or substantially lack death repressor activity.

5,700,639

METHOD FOR THE DETECTION OF METABOLICALLY LABELLED DNA

Bernhard Trauth, Weilheim; Matthias Hinzpeter, München; Clemens Doppler, Seeshaupt, and Eberhard Russmann, Penzberg, all of Germany, assignors to Boehringer Mannheim GmbH, Mannheim, Germany

Filed Jun. 9, 1994, Ser. No. 257,686

Claims priority, application Germany, Jun. 12, 1993, 43 19 506.7

Int. Cl.[6] C12Q *1/68;* **G01N** *33/53;33/537;33/543*

U.S. Cl. 435—6 **14 Claims**

1. Method for measuring DNA synthesis in a cell, comprising:

(a) metabolically incorporating a nucleotide analogue into a double stranded DNA of said cell;

(b) incubating a cell fraction of said cell containing said double stranded DNA having incorporated therein said nucleotide analogue in the presence of a first antibody specific to DNA to obtain a double stranded DNA-first antibody complex, wherein said first antibody is bound to a solid phase prior to or after said incubating;

(c) denaturing or partially degrading said double stranded DNA bound to said first antibody without separating said first antibody from said solid phase, thereby providing denatured DNA or partially degraded DNA bound to said first antibody;

(d) contacting said bound denatured or partially degraded DNA with a labeled second antibody specific to said nucleotide analogue under conditions favoring binding of said labelled second antibody to said nucleotide analogue present in said bound denatured or partially degraded DNA,

(e) separating the solid phase from reagents in liquid phase; and

(f) measuring a level of labelled second antibody on said solid phase or in said liquid phase as a measure of nucleotide analogue incorporation into the DNA of said cell thereby measuring the DNA synthesis of the cell.

9. Method for distinguishing between lytic or apoptotic mechanism of a cytotoxic agent or cell action on a sample of cells comprising:

(a) incorporating a nucleotide analogue into the double stranded DNA of a sample of cells in culture medium;

(b) contacting said sample having incorporated therein said nucleotide analogue with a cytotoxic agent or cell population for a period of 4 hours or less;

(c) separating said sample of cells into a first group and a second group;

(d) contacting the first group with an agent that lyses cells by lysing the cell membranes thereof but not the nuclear membrane of said cells, to obtain a cytoplasmic cell fraction and a nuclear fraction;

(e) incubating said cytoplasmic cell fraction obtained in step (d) in the presence of a first antibody specific to DNA to obtain a double stranded DNA-first antibody complex, wherein said first antibody is bound to a solid phase prior to or after said incubating;

(f) incubating a cell culture supernatant cell fraction from the second group in the presence of a first antibody specific to DNA to obtain a double stranded DNA first antibody complex, wherein said first antibody is bound to a solid phase prior to or after said incubating;

(g) for each of the cell fractions from said first and said second groups according to steps (e) and (f):

(i) denaturing or partially degrading said double stranded DNA bound to said first antibody without separating said first antibody from said solid phase, thereby providing denatured or partially degraded DNA bound to said first antibody,

(ii) contacting said bound denatured or partially degraded DNA with a labeled second antibody specific to said nucleotide analogue under conditions favoring binding to said bound denatured or partially degraded DNA;

(iii) separating the solid phase from reagents in liquid phase;

(iv) measuring a level of labelled second antibody on said solid phase or in said liquid phase as a measure of a level of DNA in said cell fraction; and

(h) comparing the levels of DNA obtained in step (g) (iv) for said cell fractions from said first and second groups, wherein the presence of DNA in both the cytoplasmic cell fraction from the first group and the cell culture supernatant cell fraction from the second group is indicative of a lytic mechanism of action of said cytotoxic agent or cell population and, wherein the presence of DNA only in said cytoplasmic cell fraction from the first group is indicative of an apoptotic mechanism of action of said cytotoxic agent or cell population.

5,700,640

INDUCERS OF GAMMA GLOBIN GENE EXPRESSION AND SCREENING ASSAYS THEREFOR

Jeffrey W. Voss, West Boylston, and Connie Caron, Westborough, both of Mass., assignors to BASF Aktiengesellschaft, Germany

Filed Sep. 16, 1994, Ser. No. 308,461

Int. Cl.[6] C12Q *1/68*

U.S. Cl. 435—6 **37 Claims**

1. A method for identifying an agent that stimulates gamma globin gene expression in a mammalian cell, comprising:

a) contacting a mammalian cell with an agent to be tested, wherein a nucleic acid molecule comprising a regulatory region of a gamma globin gene operatively linked to a reporter gene has been introduced into the mammalian cell; and

b) measuring reporter gene activity in the mammalian cell, wherein an increase in reporter gene activity in the presence of the agent, relative to reporter gene activity in the absence of the agent, is indicative that the agent stimulates gamma globin gene expression.

5,700,641

DIAGNOSTIC METHOD, TEST KIT, DRUG AND THERAPEUTIC TREATMENT FOR AUTOIMMUNE DISEASES

Eeva-Marjatta Salonen, Tunturikatu 15 B 46, FIN-00100 Helsinki, Finland

Filed Mar. 1, 1995, Ser. No. 396,238

Int. Cl.[6] C12Q *1/68;* **G01N** *33/564*

U.S. Cl. 435—6 **26 Claims**

1. A method for detecting anti-DNA-antibodies in a sample by contacting said sample with a telomeric sequence of DNA selected from the group consisting of a single stranded telomere, a complementary strand thereto, a double stranded teleomere, and a part or a repeat or a combination of any of the foregoing, to provide binding of said antibodies to said telomeric sequence of DNA, and detecting said binding of said antibodies to said telomeric sequence.

5,700,642

OLIGONUCLEOTIDE SIZING USING IMMOBILIZED CLEAVABLE PRIMERS

Joseph Albert Monforte, Berkeley; Christopher Hank Becker, Menlo Park; Thomas Andrew Shaler, San Francisco, and Daniel Joseph Pollart, Menlo Park, all of Calif., assignors to SRI International, Menlo Park, Calif.

Filed May 22, 1995, Ser. No. 445,751

Int. Cl.[6] C12Q *1/68;* **C12P** *19/34*

U.S. Cl. 435—6 **19 Claims**

1. A method for determining the size of a primer extension product, comprising

(a) hybridizing a primer with a target nucleic acid, where said primer (i) is complementary to said target nucleic acid; (ii) has a first region containing the 5' end of the primer and an immobilization attachment site, and (iii) has a second region containing the 3' end of the primer, where the 3' end is capable of serving as a priming site for enzymatic extension and where said second region contains a selected cleavable site,

(b) extending the primer enzymatically to generate a polynucleotide mixture containing an extension product composed of the primer and an extension segment;

(c) cleaving said extension product at the cleavable site to release said extension segment, where prior to said cleaving the primer is immobilized at said immobilization attachment site; and

(d) sizing the extension segment by mass spectrometry, whereby said cleaving is effective to increase the read length of the extension segment relative to the read length of the product of (b).

5,700,643

STABLE DNA CONSTRUCTS

Glenn Kawasaki, Seattle, Wash., assignor to ZymoGenetics, Inc., Seattle, Wash.

Continuation of Ser. No. 134,480, Oct. 12, 1993, Pat. No. 5,527,668, which is a continuation of Ser. No. 812,886, Dec. 20, 1991, abandoned, which is a continuation of Ser. No. 233,990, Aug. 16, 1988, abandoned, which is a continuation of Ser. No. 734,119, May 15, 1985, abandoned, which is a continuation-in-part of Ser. No. 614,734, May 25, 1984, abandoned. This application Jun. 6, 1995, Ser. No. 473,012

Int. Cl.[6] C12P *21/02*

U.S. Cl. 435—6 **18 Claims**

1. A method for producing a protein product in a yeast host cell having a deficiency in a function necessary for normal cell growth on complex media, comprising the steps of:

(a) transforming said yeast host cell with a DNA molecule comprising a heterologous glycolytic enzyme gene which complements said deficiency and a sequence coding for said protein product;

(b) culturing the transformants from step (a) under normal growth conditions in a growth medium, whereby said gene

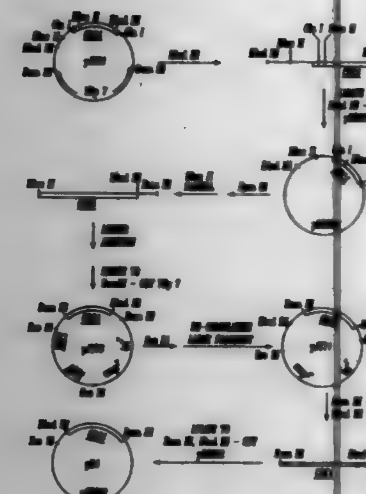

functions as a selectable marker for cells transformed with said DNA molecule in the absence of additional selective pressure, resulting in enhanced plasmid stability.

5,700,644

IDENTIFICATION OF DIFFERENTIALLY EXPRESSED GENES

Michael N. Gould, and Eric A. Ariazi, both of Madison, Wis., assignors to Wisconsin Alumni Research Foundation, Madison, Wis.

Filed Jun. 7, 1995, Ser. No. 480,597

Int. Cl.⁶ C12Q *1/68;* **C12P** *19/34;* **C12N** *15/10;15/70*

U.S. Cl. 435—6 **6 Claims**

4. A method for identifying differentially expressed genes in experimental cells relative to control cells, comprising:

creating two separate cDNA libraries that are derived from the experimental cells and control cells respectively, wherein individual members of the cDNA libraries are comprised of a 5' PCR (polymerase chain reaction) primer binding region, a cDNA, and a 3' PCR primer binding region, with the 5' PCR primer binding region within a library being the same for the members of that library, the 3' PCR primer binding region within a library being the same for the members of that library, and within each library the 5' and 3' primer binding regions are different from each other in that library, with said primer binding regions each being made up of nucleotides that are not part of the cDNA sequence and up to no more than two nucleotides of the cDNA sequence adjacent thereto;

thereafter separately amplifying each cDNA library using polymerase chain reaction;

thereafter displaying the amplified DNA derived from each library in separate chromatography gel lanes; and

thereafter comparing DNA positions in a first such lane with those in a second such lane to select for cDNAs having in lane positions different amounts of amplified DNA.

5. A method for identifying differentially expressed genes in experimental cells relative to control cells, comprising:

forming a first cDNA library from RNA that has been expressed by the experimental cells and a second cDNA library from RNA that has been expressed by the control cells;

removing from both of the libraries at least a portion of the cDNA common to both the first and second libraries by subtractive hybridization to provide enriched cDNA coding for differentially expressed genes that are present in the libraries;

separately inserting the enriched cDNA derived from each library into trimming plasmids and for both libraries trimming the enriched cDNA from at least one end such that the resulting trimmed cDNA from both libraries has 5' and 3' DNA PCR (polymerase chain reaction) primer binding regions at least partially 5' and at least partially 3' respectively of cDNA that codes for cell mRNA, wherein DNA PCR primer 5' binding regions and 3' binding regions for both libraries are different from each other within a trimmed cDNA library;

thereafter separately amplifying the enriched, trimmed cDNA from both libraries using polymerase chain reaction;

displaying the amplified DNA on a chromatography gel to separate different DNA coding for different differentially expressed DNA; and

analyzing the gel to identify chromatography positions having different amounts of amplified DNA, and to thereby identify differentially expressed genes.

5,700,645

METHODS AND KITS FOR SEPARATION, CONCENTRATION AND ANALYSIS OF CELLS

Edward E. Pahuski, Marshall; Randall L. Dimond, Madison, both of Wis.; John H. Priest, Everett, Wash.; Lisa Zandt, Madison, Wis.; Kathleen K. Stebnitz, Shorewood, Wis., and Leopoldo G. Mendoza, Madison, Wis., assignors to Promega Corporation, Madison, Wis.

Division of Ser. No. 3,242, Jan. 11, 1993, Pat. No. 5,587,286, which is a continuation-in-part of Ser. No. 547,981, Jul. 2, 1990, abandoned. This application Jun. 7, 1995, Ser. No. 485,428

Int. Cl.⁶ C12Q *1/68;1/66;* **C12N** *1/00;* **G01N** *33/44*

U.S. Cl. 435—6 **59 Claims**

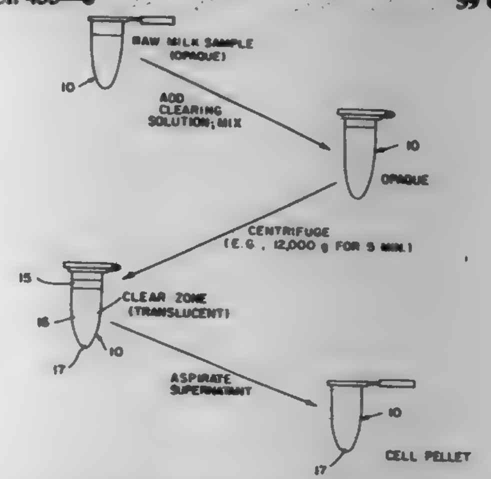

1. A method of separating and concentrating cells from a liquid milk sample comprising the steps of:

(a) mixing a chelating agent and a microparticulate carrier wherein the microparticulate carrier sediments slightly slower than microbial cells, and wherein the microparticulate carrier serves as a visual indicator facilitating the removal of supernatant without disturbing the cell pellet in the milk sample,

(b) centrifuging the sample to form a cell pellet.

5,700,646

COMPREHENSIVE IDENTIFICATION SCHEME FOR PATHOGENS

Sheila J. Wood, Edgewood, Md., assignor to The United States of America as represented by the Secretary of the Army, Washington, D.C.

Filed Sep. 15, 1995, Ser. No. 530,400

Int. Cl.⁶ C12Q *1/68;1/70*

U.S. Cl. 435—6 **2 Claims**

1. A method for the detection of a pathogen in a sample which comprises the steps of:

(a) providing a reagent complex comprising a solid support labeled with a fluorescent moiety and having attached thereto a single-stranded DNA probe to which is annealed a complementary DNA labeled with a fluorescent quencher;

(b) contacting the reagent complex with a sample under conditions in which a nucleotide sequence of the pathogen, if present in the sample, hybridizes to the single-stranded DNA probe and displaces the DNA labeled with the fluorescent quencher; and

(c) detecting an increase in fluorescent signal from the solid support as indicative of the presence of the pathogen in the sample.

5,700,647

CARBOCATION CONTAINING CYANINE-TYPE DYE

Takeshi Miyazaki, Ebina; Kazumi Tanaka; Tsuyoshi Santo, both of Yokohama; Toshikazu Ohnishi, Machida; Tetsuro Fukui, Kawasaki, and Tadashi Okamoto, Yokohama, all of Japan, assignors to Canon Kabushiki Kaisha, Tokyo, Japan

Division of Ser. No. 900,302, Jun. 18, 1992, Pat. No. 5,512,446. This application Dec. 7, 1995, Ser. No. 568,680

Claims priority, application Japan, Jun. 21, 1991, 3-150428; Oct. 28, 1991, 3-281645; Jan. 10, 1992, 4-150665

Int. Cl.⁶ C12Q *1/68*

U.S. Cl. 435—6 **20 Claims**

1. A labeled complex for detecting a subject compound to be analyzed by means of optical means using near-infrared radiation which complex comprises a substance from a living organism and a labeling agent fixed onto the substance, the substance capable of specifically binding to the subject compound, wherein the labeling agent comprises a compound represented by the general formula (IV):

$$\left[\begin{matrix} A \\ B \end{matrix}\!\!>\!C^{\oplus}\!-\!(\underset{r_1'}{C}=\underset{r_2'}{C})_k\!-\!(CH=CH)_l\!-\!CH=C\!<\!\!\begin{matrix} D \\ E \end{matrix}\right] X_2^{\ominus} \qquad \text{(IV)}$$

wherein A, B, D and E are independently selected from the group consisting of hydrogen atom, a substituted or an unsubstituted alkyl group having two or more carbon atoms, alkenyl group, aralkyl group, aryl group, styryl group and heterocyclic group, and at least one of A and B is a substituted or unsubstituted aryl group, and at least one of D and E is a substituted or unsubstituted aryl group;

r_1' and r_2' are individually selected from the group consisting of hydrogen atom, a substituted or an unsubstituted alkyl group, cyclic alkyl group, alkenyl group, aralkyl group and aryl group; k is 0 or 1; is 0, 1 or 2; and $X_2^{\ominus}$ represents an anion.

5,700,648

STREPTOLYSIN O ANTIGEN DERIVATIVES, THEIR PRODUCTION AND USES

Michael Kehoe, 14 Springhouse Lane, Ebchester, Co Durham DH8 0QF, and Michael Pinkney, 6 Ilfracombe Gardens, Whitley Bay, NE26 3SL, both of England

Continuation of Ser. No. 959,167, Oct. 9, 1992, abandoned, which is a continuation of Ser. No. 830,549, Jan. 31, 1992, abandoned, which is a continuation of Ser. No. 543,357, Jun. 25, 1990, abandoned. This application Aug. 26, 1994, Ser. No. 296,879

Int. Cl.⁶ C07K *14/315;16/12;* **C12P** *21/02;* **G01N** *33/53*

U.S. Cl. 435—7.1 **16 Claims**

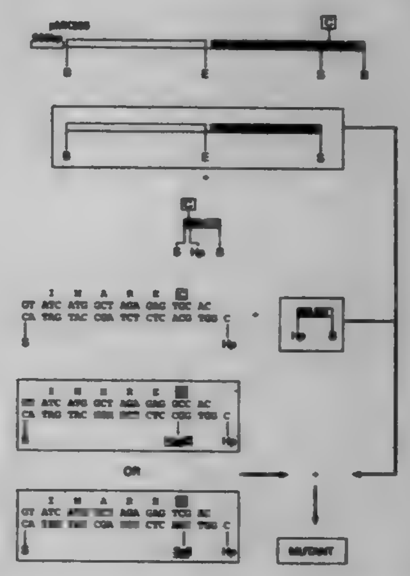

1. A cytolytic derivative of the protein streptolysin O (SLO) immunologically cross-reactive with naturally occurring streptolysin O wherein Cys-530 of naturally occurring SLO has been substituted by a different amino acid.

5,700,649

METHOD OF DETECTION OF URINARY TUMOR ASSOCIATED ANTIGEN

Donald L. Morton, 15054 Corona del Mar, Pacific Palisades, Calif. 90272; Rishab K. Gupta, 7118 Costello Ave., Van Nuys, Calif. 91405, and David M. Euhus, 7038 Ramsgate Pl., Los Angeles, Calif. 90045

Division of Ser. No. 431,533, Nov. 3, 1989. This application Jun. 5, 1995, Ser. No. 462,264

Int. Cl.⁶ G01N *33/53;33/564;* **A61K** *39/00*

U.S. Cl. 435—7.1 **24 Claims**

1. A method of detecting a cancer in a subject having a naturally occurring immune complex of Urinary Tumor Associated Antigen (UTAA) and a first anti-UTAA antibody comprising

(i) contacting a sample from said subject with a second anti-UTAA antibody; and

(ii) detecting said complexes bound to said second anti-UTAA antibody with an antibody reactive with said first anti-UTAA antibody,

wherein said first and said second anti-UTAA antibodies recognized different epitopes on UTAA.

5,700,650

MECHANISM-BASED SCREEN FOR RETINOID X RECEPTOR AGONISTS AND ANTAGONISTS

Paul Mak, East Windsor, N.J., and Sotirios K. Karathanasis, Rockland, N.Y., assignors to American Cyanamid Company, Madison, N.J.

Division of Ser. No. 999,071, Dec. 31, 1992. This application Jun. 6, 1995, Ser. No. 469,122

Int. Cl.⁶ G01N *33/566*

U.S. Cl. 435—7.1 **6 Claims**

1. A method for screening for a compound having retinoid X receptor agonist or antagonist activity, which comprises the steps of:

(a) providing a yeast strain which expresses the retinoid X receptor and activates a reporter plasmid containing an apolipoprotein AI gene site A mutant comprising a nucleotide sequence selected from the group consisting of SEQ ID NOS: 7–15 and 17;

(b) incubating the compound with the yeast strain of step (a) in suitable media and a colorless chromogenic substrate; and

(c) examining the media for development of color, wherein the presence of color indicates that the compound has retinoid X receptor agonist or antagonist activity.

5,700,651

Patent Not Issued For This Number

5,700,652

QUANTITATIVE DETERMINATION METHOD FOR SODIUM IONS

Toshio Tadano, Numazu; Akira Miike, Shizuoka, and Jun Umemoto, Miki, all of Japan, assignors to Kyowa Medex Co., Ltd., Tokyo, Japan

PCT No. PCT/JP94/00572, § 371 Date Nov. 29, 1995, § 102(e) Date Nov. 29, 1995, PCT Pub. No. WO94/23061, PCT Pub. Date Oct. 13, 1994

PCT Filed Apr. 6, 1994, Ser. No. 530,336

Claims priority, application Japan, Apr. 7, 1993, 5-080817

Int. Cl.⁶ C12Q *1/54;1/00;1/34;1/48*

U.S. Cl. 435—14 **4 Claims**

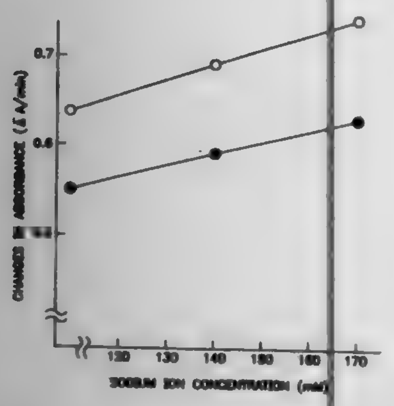

1. A method for quantitatively determining sodium ion in a sample; comprising the steps of:

admixing β-galactosidase and an aqueous medium comprising said sample;

reacting said sample with the β-galactosidase in the presence of at least one cation selected from the group consisting of potassium ion, cesium ion and ammonium ion; and

correlating the result of said reaction with the quantity of sodium ions in said sample.

5,700,653

LIQUID STABLE THIOL ACTIVATOR

Carrie J. Lu, Fullerton, and Fredrick S. Yein, Diamond Bar, both of Calif., assignors to Beckman Instruments, Inc., Fullerton, Calif.

Continuation of Ser. No. 239,260, May 6, 1994, abandoned. This application Oct. 9, 1995, Ser. No. 541,473

Int. Cl.⁶ C12Q *1/48;* **C12N** *9/96*

U.S. Cl. 435—15 **18 Claims**

1. A stabilized thiol activating composition, comprising:

(a) a thiol which activates an enzyme;

(b) a stabilizing agent which stabilizes the thiol, wherein the stabilizing agent is a free radical scavenger;

(c) magnesium ion for facilitating activation of the enzyme; and

(d) a liquid which solubilizes the thiol, the stabilizing agent, and the magnesium ion, wherein the thiol is stabilized in the liquid by the stabilizing agent, and wherein the composition is substantially free of any creatine kinase, said free radical scavenger is selected from the group consisting of inositol, tocopherol, mannitol, superoxide dismutase, catalase, glutathione peroxidase, N-2-mercaptopropionyl glycine, dimethyl thiourea, glutathione, 21-aminosteroids, deferoxamine, allopurinol, dimethyl sulfoxide and coenzyme Q.

5,700,654

METHOD AND COMPOSITIONS TO ASSESS OXIDATIVE STRESS IN VIVO

L. Jackson Roberts, and Jason D. Morrow, both of Nashville, Tenn., assignors to Vanderbilt Unversity, Nashville, Tenn.

Continuation-in-part of Ser. No. 715,419, Jun. 14, 1991, abandoned. This application Sep. 12, 1994, Ser. No. 304,147

Int. Cl.⁶ C12Q *1/26;* **G01N** *33/00;* **C07C** *61/06*

U.S. Cl. 435—25 **8 Claims**

1. A method to assess oxidative stress in vivo comprising:

(a) measuring the amount of noncyclooxygenase derived prostanoids in a biological sample before the ex vivo development of prostanoids in the sample;

(b) comparing the measured amount of the noncyclooxgenase derived prostanoids with a control; and

(c) assessing oxidative stress in vivo based on the comparison in step c.

5,700,655

METHOD FOR QUANTIFICATION OF BIOLOGICAL MATERIAL IN A SAMPLE

Andrew J. Croteau, Old Orchard Beach; Mark W. Pierson, Saco; David E. Townsend, Scarborough, and Ali Naqui, Falmouth, all of Me., assignors to Idexx Laboratories, Inc., Westbrook, Me.

Continuation-in-part of Ser. No. 557,529, Nov. 14, 1995. This application Feb. 23, 1996, Ser. No. 606,229

Int. Cl.⁶ C12Q *1/24;* **C12M** *1/22*

U.S. Cl. 435—30 **22 Claims**

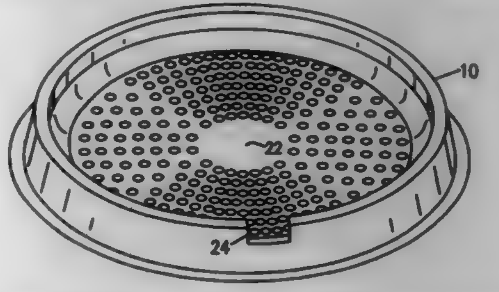

1. A method for detection of the amount of a biological material in a sample, comprising the steps of:

liquefying said sample if necessary, and pouring the liquefied sample into an incubation plate comprising a generally flat horizontal surface, said surface defining a plurality of at least twenty recessed wells, each well being adapted to hold an aliquot of liquid and being sized and shaped, and formed of a material suitable to hold said aliquot within each said well by surface tension or by gelling of said liquid, said plate further comprising a landing pad area of size sufficient to hold the liquefied sample prior to dispersal of the sample to said wells;

pouring off any excess liquid from said incubation plate, and

incubating said incubation plate until the presence or absence of said biological material in one or more of said wells is determined so that the mount of said biological material can be determined.

12. A sterile incubation plate for determination of the mount of a biological material, comprising a generally flat horizontal surface, said surface defining a plurality of at least twenty recessed wells, each said well being adapted to hold an aliquot of liquid and being sized and shaped, and formed of a material suitable to hold said aliquot within each said well by surface tension and wherein said plate further comprises a landing pad adapted to hold a sample prior to aliquoting of said sample to said wells,

wherein said incubation plate will not provide any positive response for said biological material in the absence of a said biological material present in a sample applied to said plate.

5,700,656

SILVER STA[illegible] OR COLLAGEN MATRIX FROM PA[illegible]AFFIN EMBEDDED TISSUE

Si-kwang Liu, Jamaica Estates, N.Y., assignor to Pig Research Institute, Taiwan, Maioli, Taiwan

Filed May 25, 1995, Ser. No. 449,910

Int. Cl.⁶ C12Q *1/08*

U.S. Cl. 435—40.52 **6 Claims**

1. A method of identifying cardiovascular dysfunction in a mammal which comprises: fixing a cardiac tissue specimen from said mammal in a fixative solution, washing said specimen in water to remove excess fixative, dehydrating said washed specimen in an alcohol, clearing said dehydrated specimen with an aromatic organic compound, embedding said cleared specimen in a melted paraffin, allowing the embedded section to cool and form a paraffin block, cutting a histological section from 25 to 30 microns thick from said paraffin block, deparaffinizing said section, clearing said deparaffinized section with an aromatic organic compound, rehydrating said cleared section in an alcohol, staining said rehydrated section with a silver solution, dehydrating said stained section with an alcohol, clearing said dehydrated stained section with an aromatic organic compound, mounting the cleared section, and examining microscopically said stained section to detect any connective tissue abnormalities.

5,700,657

VECTORS AND VECTOR SYSTEMS INCLUDING GENES ENCODING TUMOR SUPPRESSOR PROTEINS AND PRODUCER CELLS TRANSFORMED THEREBY

Gary A. Beaudry, Montclair; Arthur H. Bertelsen, Ridgewood; Michael I. Sherman, GlenRidge, all of N.J., and Bert Vogelstein, Baltimore, Md., assignors to Genzyme Corporation, Framingham, Mass.

Filed Dec. 13, 1993, Ser. No. 166,297

Int. Cl.⁶ C12P *21/02;19/34;* **C12N** *5/10;7/01*

U.S. Cl. 435—69.1 **8 Claims**

1. A process for producing a retroviral vector particle in a producer cell comprising:

producing a retroviral vector particle from a producer cell containing a retroviral vector including RNA or DNA encoding a tumor suppressor protein wherein expression of said tumor suppressor protein is controlled by an inducible promoter and said retroviral vector particle is produced under conditions under which the inducible promoter is not activated.

5,700,658

ICAM-4 MATERIALS AND METHODS

Patrick D. Kilgannon, Bothell, and W. Michael Gallatin, Seattle, both of Wash., assignors to ICOS Corporation, Bothell, Wash.

Continuation-in-part of Ser. No. 102,852, Aug. 5, 1993, abandoned, which is a continuation-in-part of Ser. No. 9,266, Jan. 22, 1993, abandoned, which is a continuation-in-part of Ser. No. 894,061, Jun. 5, 1992, abandoned, which is a continuation-in-part of Ser. No. 889,724, May 26, 1992, abandoned, which is a continuation-in-part of Ser. No. 827,689, Jan. 27, 1992, abandoned. This application May 18, 1994, Ser. No. 245,295

Int. Cl.⁶ C12N *15/12*

U.S. Cl. 435—69.1 **9 Claims**

1. A purified and isolated polynucleotide comprising the ICAM-4 protein coding sequence set out in SEQ ID NO: 1.

5,700,659

POLYPEPTIDE POSSESSING PROTEIN DISULFIDE ISOMERASE ACTIVITY GENE ENCODING THE SAME AND PROCESS FOR PRODUCING THE SAME

Yukio Yamada, Tsushima; Osamu Asami, Kounan; Hidehiko Sugiyama; Chie Idekoba, both of Nagoya; Fumihiko Hoshino, Aichi; Masana Hirai, Seto; Tsutomu Kajino, Toyoake; Takao Imaeda, Kasugai, and Kiyoko Sarai, Toyota, all of Japan, assignors to Kabushiki Kaisha Toyota Chuo Kenkusho, Aichi, Japan

Division of Ser. No. 68,395, May 27, 1993, abandoned. This application Jun. 5, 1995, Ser. No. 464,365

Claims priority, application Japan, May 27, 1992, 4-135254; Mar. 4, 1993, 5-44013; Mar. 4, 1993, 5-44014

Int. Cl.⁶ C12N *15/52;15/31*

U.S. Cl. 435—69.1 **4 Claims**

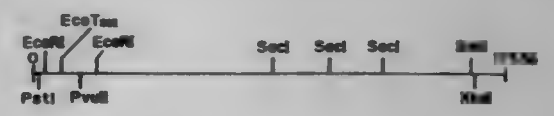

4. A process for producing a highly thermostable polypeptide possessing protein disulfide isomerase activity, which comprises culturing *Humicola insolens* KASI in a nutrient medium to produce said polypeptide and recovering said polypeptide from said medium,

wherein said polypeptide has the following properties:

A) it catalyzes a disulfide exchange in proteins;

B) ribonuclease A is a substrate;

C) it has a suitable active temperature of 20° to 70° C.;

D) it is stable at a pH value of 6 to 9; and

E) it has a molecular weight of about 60,000 to 62,000 as measured by SDS-polyacrylamide gel electrophoresis.

5,700,660

POSITIONAL CONTROL OF SELENIUM INSERTION IN POLYPEPTIDES FOR X-RAY CRYSTALLOGRAPHY

Jack L. Leonard, Shrewsbury, and Peter E. Newburger, Waban, both of Mass., assignors to University of Massachusetts Medical Center, Worcester, Mass.

Continuation-in-part of Ser. No. 277,492, Jul. 19, 1994, abandoned, which is a continuation-in-part of Ser. No. 66,680, May 24, 1993, abandoned. This application Jun. 7, 1995, Ser. No. 473,496

Int. Cl.⁶ C12N *15/00*

U.S. Cl. 435—69.1 **16 Claims**

1. A method for determining the structure of a heterologous polypeptide that does not contain selenocysteine in its native form, said method comprising

(1) transfecting a cell with (i) a first nucleic acid encoding said polypeptide, wherein at least one, specific codon of mRNA transcribed from said first nucleic acid is replaced by the codon UGA, and (ii) a second nucleic acid operably linked to said first nucleic acid, said second nucleic acid directing the translation of said UGA codon as selenocysteine only when said cell can obtain selenium from the medium in which said cell is grown, wherein said second nucleic acid is derived from the 3' untranslated region of a gene encoding mammalian glutathione peroxidase and comprises a continuous stretch of at least 79 nucleotides comprising three stem elements, each having a 5' half and a 3' half, and three loop elements, each having a 5' end and a 3' end,

wherein the stem elements comprise

a) a base stem comprising at least 16 nucleotides that can form 8 complementary pairs of nucleotides,

b) a lower stem comprising at least 16 nucleotides that can form 8 complementary pairs of nucleotides, the first nucleotide of the 5' half of the lower stem being bound to the last nucleotide of the 5' half of the base stem, and the first nucleotide of the 3' half of the lower stem being bound to the last nucleotide of the 3' half of the base stem, and

c) an upper stem comprising at least 22 nucleotides that can form 11 complementary pairs of nucleotides,

wherein the loop elements comprise

d) a first loop consisting of 5'-AUGRG-3' (SEQ ID NO:2), the 5'-A being bound to the last nucleotide of the 5' half of the lower stem and the 3'-G being bound to the first nucleotide of the 5' half of the upper stem,

e) a second loop consisting of 5'-YRNNNNUAV-3' (SEQ ID NO:3), the 5'-Y being bound to the first nucleotide of the 3' half of the upper stem and the 3'-V being bound to the last nucleotide of the 3' half of the lower stem, and

f) a third, apical loop consisting of 5'-ARANNNN-NNNN- 3' (SEQ ID NO:4), the 5'-A being bound to the last nucleotide of the 5' half of the upper stem and the 3'-N being bound to the last nucleotide of the 3' half of the upper stem, and wherein each A is adenine, G is quanine, N is adenine, guanine, cytosine, or uracil, R is quanine or adenine, U is uracil, V is any nucleotide except thymidine or uracil, and Y is uracil or cytosine;

(2) growing said cell in selenium-containing growth medium under conditions in which said cell incorporates at least one selenocysteine residue into said polypeptide at a specific location;

(3) isolating said polypeptide from said cell or said growth medium;

(4) forming a crystal of said polypeptide; and

(5) performing X-ray crystallography on said crystal, wherein said selenocysteine residue is used to determine the structure of said heterologous polypeptide.

5,700,661

GENE EXPRESSION REGULATORY DNA

Ryoichi Katsumata, and Yutaka Takano, both of Tokyo, Japan, assignors to Kyowa Hakko Kogyo Co., Ltd., Tokyo, Japan

Continuation of Ser. No. 398,456, Mar. 3, 1995, abandoned, which is a division of Ser. No. 938,333, Aug. 28, 1992, Pat. No. 5,439,822. This application Jun. 3, 1996, Ser. No. 660,216

Claims priority, application Japan, Feb. 9, 1991, 3-221885

Int. Cl.[6] C12P *21/06;* **C12N** *15/09; 1/21*

U.S. Cl. 435—69.1 **1 Claim**

1. A process for producing a protein which comprises culturing in a medium a host coryneform bacterium tranformant carrying a recombinant DNA prepared by incorporating into a vector DNA autonomously replicable in said host coryneform bacterium (1) a DNA which is from the isocitrate lyase gene of a coryneform bacterium, said DNA having at least a functional nucleotide sequence of nucleotide sequence 1 to 702 of SEQ ID NO:4, and which regulates expression of a structural gene encoding said protein when incorporated into said vector DNA together with said structural gene and introduced into said host coryneform bacterium and (2) the structural gene encoding the protein; allowing the protein to accumulate in the culture; and recovering the protein from the culture.

5,700,662

PROCESS FOR PREPARING INSULIN ANALOGS

Ronald E. Chance, Westfield; Richard D. DiMarchi, Carmel; Bruce H. Frank, Indianapolis, and James E. Shields, Noblesville, all of Ind., assignors to Eli Lilly and Company, Indianapolis, Ind.

Division of Ser. No. 57,201, May 5, 1993, which is a continuation of Ser. No. 686,632, Apr. 17, 1991, abandoned, which is a continuation-in-part of Ser. No. 388,201, Aug. 4, 1989, abandoned, which is a continuation-in-part of Ser. No. 308,352, Mar. 9, 1989, abandoned. This application Jun. 6, 1995, Ser. No. 465,847

Int. Cl.[6] C07K *7/40;* **D61K** *37/26*

U.S. Cl. 435—69.4 **20 Claims**

1. A process for preparing a therapeutically active insulin analog of the formula;

[Formula (I)]

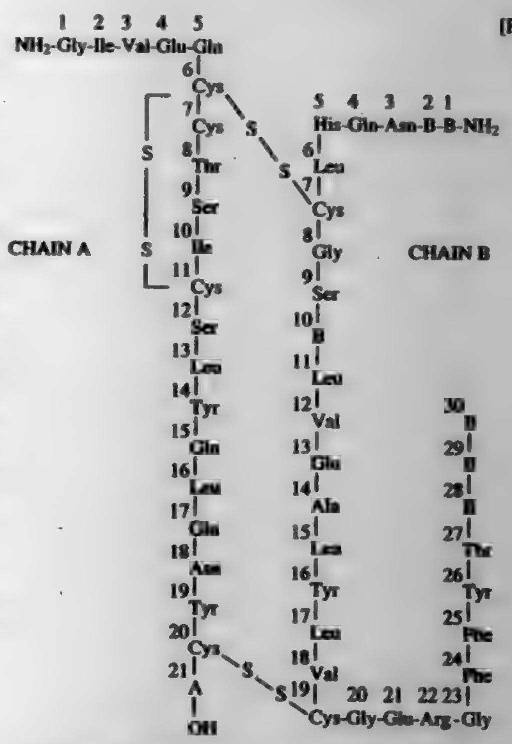

or a pharmaceutically acceptable salt thereof, wherein

A_{21} is Asn, or Ala;

B_1 is Phe, or is absent;

B_2 is Val, or is absent;

B_{10} is His, or Asp;

B_{28} is any amino acid;

B_{29} is L-Pro, D-Pro, L-hydroxyproline, D-hydroxyproline; and,

B_{30} is Thr, Ala, or is absent; said method comprising:

i) transforming a host cell with DNA that encodes a proinsulin-like precursor molecule having the A and B chains of Formula (I);

ii) culturing the recombinant host cell under conditions suitable for expressing the DNA used to transform the host cell and isolating the proinsulin-like precursor molecule encoded by the DNA in step i);

iii) enzymatically cleaving the proinsulin-like precursor molecule to remove the connecting peptide; and,

iv) recovering the insulin analog.

5,700,663

MUTANTS OF HUMAN ANTITHROBIN III AND METHODS FOR THEIR PRODUCTION

Gerd Zettlmeissl, Lahntal; Hermann Erich Karges, Marburg, and Achim Becker, Dautphetal, all of Germany, assignors to Behringwerke Aktiengesellschaft, Marburg, Germany

Division of Ser. No. 993,910, Dec. 18, 1992, Pat. No. 5,618,713, which is a continuation of Ser. No. 469,913, Jan. 22, 1990, abandoned. This application May 30, 1995, Ser. No. 452,836

Claims priority, application Germany, Jan. 24, 1989, 39 01 917.9

Int. Cl.[6] A61K *38/17;* **C07K** *14/47*

U.S. Cl. 435—69.6 **5 Claims**

1. An antithrombin III (AT III) mutant, which contains an amino acid substitution at position 49, 96, 135, 155, 192, 393, or 394, wherein the substitution can be present either singly or in combination with one or more other substitutions, and wherein the amino acid substituted at position 393 is not His.

5,700,664

MAMMALIAN CYTOKINE, IL-11

Yu-Chung Yang, Indianapolis, Ind.; Frances K. Bennett, Melrose, and Stephen R. Paul, Boston, both of Mass., assignors to Genetics Institute, Inc., Cambridge, Mass.

PCT No. PCT/US90/06803, § 371 Date Nov. 19, 1992, § 102(e) Date Nov. 19, 1992, PCT Pub. No. WO91/07495, PCT Pub. Date May 30, 1991

Continuation-in-part of Ser. No. 526,474, May 21, 1990, Pat. No. 5,215,895, which is a continuation-in-part of Ser. No. 441,100, Nov. 22, 1989, abandoned. This PCT application Nov. 20, 1990, Ser. No. 949,516

Int. Cl.[6] C12N *15/24;* **C07K** *14/54;* **A61K** *38/20*

U.S. Cl. 435—69.52 **15 Claims**

1. An isolated IL-11 having the amino acid sequence of SEQ ID NO: 2 and having one or more of the following characteristics:

(1) an apparent molecular weight under reducing conditions on SDS PAGE of approximately 20 kd;

(2) a calculated molecular weight of approximately 20 kd;

(3) biological activity in a T1165 assay;

(4) biological activity in a megakaryocyte colony forming assay in the presence of IL-3;

(5) biological activity on a B cell plaque forming assay.

5,700,665

METHOD FOR THE EXTRACTION OF PERIPLASMIC PROTEINS FROM PROKARYOTIC MICROORGANISMS IN THE PRESENCE OF ARGININE

Richard Legoux, Le Faget; Paul Maldonado, Symphorien d'Ozon, and Marc Salome, Castanet Tolosan, all of France, assignors to Sanofi, Paris, France

Filed Jan. 31, 1996, Ser. No. 594,469

Claims priority, application France, Jan. 31, 1995, 95 01083

Int. Cl.[6] C12N *1/20;1/21;* **C12P** *21/00*

U.S. Cl. 435—71.2 **18 Claims**

1. In a method for the extraction of recombinant periplasmic proteins, wherein the improvement comprises carrying out the extraction in the presence of arginine.

5,700,666

PROCESS FOR THE PRODUCTION OF ARABINONUCLEOTIDES

Heidi Hummel-Marquardt; Thomas Schmitz; Mario Kennecke, and Alfred Weber, all of Berlin, Germany, assignors to Schering Aktiengesellschaft, Berlin, Germany

PCT No. PCT/EP94/02949, § 371 Date Sep. 4, 1996, § 102(e) Date Sep. 4, 1996, PCT Pub. No. WO95/09244, PCT Pub. Date Apr. 6, 1995

PCT Filed Sep. 6, 1994, Ser. No. 619,548

Claims priority, application Germany, Sep. 28, 1993, P 43 33 727.9

Int. Cl.[6] C12P *19/40;* **C12N** *1/20*

U.S. Cl. 435—88 **5 Claims**

1. A process for the production of an arabinonucleotide of formula I

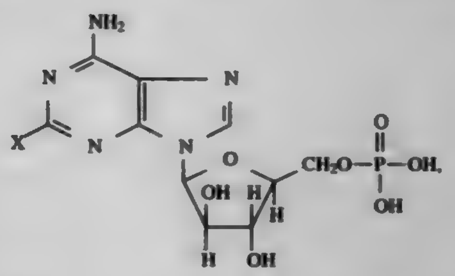

(I)

wherein:

X is a hydrogen atom or a fluorine atom, comprising, fermenting an arabinonucleoside of formula II

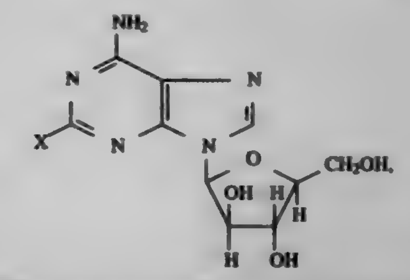

(II)

wherein X has the above-mentioned meaning, in the presence of an aryl phosphate of formula III

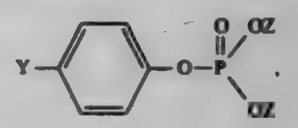

(III)

where

Y is a hydrogen atom or a nitro group; and

Z is two hydrogen atoms or two alkali metal atoms, with a microorganisms that is capable of phosphorylating nucleosides.

5,700,667

STRATEGY FOR THE PRODUCTION OF RNA FROM IMMOBILIZED TEMPLATES

Herbert A. Marble, and Robert H. Davis, both of Boulder, Colo., assignors to Regents of the University of Colorado, The, Boulder, Colo.

Continuation of Ser. No. 123,564, Sep. 20, 1993, abandoned. This application May 18, 1995, Ser. No. 443,958

Int. Cl.[6] C12P *19/34*

U.S. Cl. 435—91.3 **46 Claims**

1. A method of producing RNA enzymatically in a bioreactor comprising the steps of:

(a) immobilizing a DNA template, comprising a noncoding strand and a coding strand comprising a double-stranded promoter sequence and a double-stranded spacer sequence upstream of said promoter sequence, to a solid support through a linkage comprising a single-stranded overhang

extending from the 5'-end of said noncoding strand and such that said coding strand remains dissociable from said noncoding strand;

(b) contacting said immobilized DNA template of step (a) with a transcription reaction mixture comprising a buffer, nucleoside triphosphates and an RNA polymerase such that RNA having a sequence complementary to said coding strand is produced;

(c) removing said RNA produced in step (b); and,

(d) repeating steps (b) and (c).

5,700,668

PROCESS FOR THE INDUSTRIAL PREPARATION OF PHOSPHATIDYLSERINE

Lorenzo De Ferra; Pietro Massardo; Oreste Piccolo, and Stefano Servi, all of Patrica, Italy, assignors to Italfarmaco Sud S.p.A., Patrica, Italy

Filed Dec. 8, 1995, Ser. No. 570,000

Int. Cl.^{6} C12N *1/20;* C12P *13/04*

U.S. Cl. 435—106 **16 Claims**

1. A process for the preparation of phosphatidylserines compounds of formula (I)

$$\begin{array}{l} CH_2OR^1 \\ | \\ CHOR^2 \\ | \\ CH_2O-\underset{\displaystyle X}{\underset{|}{P}}(=O)-OCH_2-CH(NH_2)-COOH \end{array} \qquad (I)$$

wherein:

R^1 and R^2, which are the same or different, are a C_{10}-C_{30} acyl; X=OH or OM, wherein M is an alkali, alkaline-earth metal, ammonium or alkylammonium; which process comprises reacting phosphatides of general formula (II)

$$\begin{array}{l} CH_2OR^1 \\ | \\ CHOR^2 \\ | \\ CH_2O-\underset{\displaystyle X}{\underset{|}{P}}(=O)-OCH_3 \end{array} \qquad (II)$$

wherein R^1, R^2 and X have the above defined meanings and R^3= CH_2—CH_2NH_2 or CH_2—$CH_2N^+(CH_3)_3$, with racemic or enantiomerically pure serine, in a water/organic solvent diphasic system, in the presence of crude phospholipase D from centrifuged fermentation broths of microorganisms strains producing extracellular PLD having a high transphosphatidylation activity.

5,700,669

ENZYMATIC HYDROLYSIS METHOD FOR THE CONVERSION OF C-7 SUGAR TO C-7 HYDROXYL TAXANES

Ronald L. Hanson, Morris Plains; Ramesh N. Patel, Bridgewater, and Laszlo J. Szarka, East Brunswick, all of N.J., assignors to Bristol-Myers Squibb Company, Princeton, N.J.

Continuation of Ser. No. 181,633, Jan. 13, 1994, abandoned. This application Apr. 12, 1995, Ser. No. 421,017

Int. Cl.^{6} C12P *17/02*

U.S. Cl. 435—123 **12 Claims**

1. A method for the preparation of at least one taxane of the following formula I containing a hydroxyl group directly bonded at C-7:

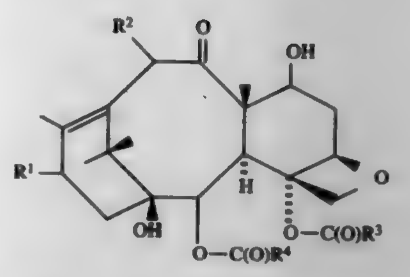

(I)

where

R^1 is hydroxyl or acyloxy;

R^2 is acyloxy or hydroxyl; and

R^3 and R^4 are independently alkyl or aryl;

or a salt thereof,

comprising the steps of contacting at least one taxane of the following formula II containing a xylosyl group directly bonded at C-7:

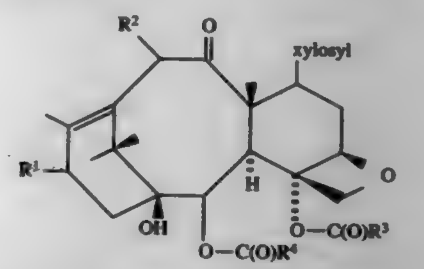

(II)

where

R^1, R^2, R^3 and R^4 are as defined above, and "xylosyl" is a xylosyl group directly bonded at C-7, or a salt thereof,

with a microorganism, or an enzyme obtained therefrom, capable of catalyzing the hydrolysis of said C-7 xylosyl group to said C-7 hydroxyl group, effecting said hydrolysis, and obtaining said at least one taxane containing a hydroxyl group directly bonded at C-7, wherein said microorganism belongs to a genus selected from the group consisting of Moraxella, Micrococcus and Bacillus.

5,700,670

METHOD FOR PRODUCING OPTICALLY ACTIVE ESTER OF γ-SUBSTITUTED-β-HYDROXYBUTYRIC ACID

Masahiro Yamagishi; Makoto Ueda; Yukie Takai; Mari Yasuda, and Takashi Mikawa, all of Yokohama, Japan, assignors to Mitsubishi Chemical Corporation, Tokyo, Japan

Filed Apr. 10, 1996, Ser. No. 630,623

Claims priority, application Japan, Apr. 13, 1995, 7-087934; Apr. 8, 1996, 8-085517

Int. Cl.^{6} C12P *13/00;7/62*

U.S. Cl. 435—128 **7 Claims**

1. A method for producing an optically active ester of γ-substituted-β-hydroxybutyric acid, comprising the steps of:

allowing microbial cells and/or a preparation therefrom of a microorganism to act on an ester of γ-substituted-acetoacetic acid represented by a general formula (1);

$$X-CH_2-\overset{\overset{\displaystyle O}{\|}}{C}-CH_2-\overset{\overset{\displaystyle O}{\|}}{C}-OR \qquad (1)$$

wherein X represents a halogen atom, a cyano group, or a protected or unprotected aminomethyl group, and R represents a lower alkyl group in the general formula (1);

wherein the microorganism has an ability to stereospecifically reduce a carbonyl group at a β-position of the ester of β-substituted-acetoacetic acid represented by the general formula (1), and the microorganism is selected from the group consisting of those belonging to the genera Yarrowia, Filobasidium, Metschnikowia, Galactomyces, Ambrosiozyma, Trichosporonoides, Aureobasidium, Phaeococcomyces, Rosulomyces, Dothichiza, Emericellopsis, Calonectria, Colletotrichum, and Ceratocystis; and

stereospecifically reducing the carbonyl group at the β-position to produce the optically active ester of γ-substituted-β-hydroxybutyric acid represented by a general formula (2);

$$X-CH_2-\underset{H}{\overset{OH}{C^*}}-CH_2-\overset{\overset{\displaystyle O}{\|}}{C}-OR \qquad (2)$$

wherein X and R in the general formula (2) are synonymous with X and R in the general formula (1).

5,700,671

METHODS OF MAKING TRANSGENIC ANIMALS PRODUCING OLIGOSACCHARIDES AND GLYCOPROTEINS

Pedro Antonio Prieto, Columbus, Ohio; David Fletcher Smith, Athens, Ga.; Richard Dale Cummings, Edmond, Okla.; John Joseph Kopchick, Athens; Pradip Mukerji, Gahanna, both of Ohio; Kelley Wilson Moremen, and James Michael Pierce, both of Athens, Ga., assignors to Abbott Laboratories, Abbott Park, Ill.

Division of Ser. No. 209,132, Mar. 9, 1994. This application May 2, 1995, Ser. No. 434,151

Int. Cl.^{6} C12N *15/00;9/10;* C12Q *1/68;* C12P *21/06*

U.S. Cl. 435—172.3 **8 Claims**

1. A method for producing a non-human transgenic mammal whose somatic and germ cells contain a transgene, wherein expression of the transgene results in the production of oligosaccharides or glycoproteins in the milk of said mammal, the method comprising the steps of:

(a) preparing a transgene, said transgene comprising in operable association 1) at least one expression regulatory sequence functional in mammary secretory cells, 2) a DNA sequence encoding a signal sequence functional in mammary secretory cells, and 3) a DNA sequence encoding a heterologous glycosyltransferase;

(b) introducing said transgene into a non-human mammalian embryo, and transferring the resulting embryo into a recipient female; and

(c) identifying at least one female offspring where expression of said transgene results in the production of a heterologous glycosyltransferase which then catalyzes the production of oligosaccharides or glycoproteins in the milk of said mammal.

5,700,672

PURIFIED THERMOSTABLE PYROCOCCUS FURIOUSUS DNA LIGASE

Eric J. Mathur, Carlsbad; Edward J. Marsh, Del Mar, and Warren E. Schoettlin, San Diego, all of Calif., assignors to Stratagene, La Jolla, Calif.

Filed Jul. 23, 1992, Ser. No. 919,140

Int. Cl.^{6} C12N *9/00;15/52*

U.S. Cl. 435—183 **3 Claims**

1. A purified thermostable DNA ligase from *Pyrococcus furiosus* having the amino acid sequence of SEQ ID NO: 1 which substantially retains activity when subjected to temperatures of from about 85° C. to about 100° C.

5,700,673

RECOMBINANTLY PRODUCED *COLEOPTERA LUCIFERASE* AND FUSION PROTEINS THEREOF

Marlene D. McElroy, deceased, late of La Jolla, Calif., by William D. McElroy, executor; Donald R. Helinski, La Jolla, Calif.; Keith V. Wood, Madison, Wis.; Jeffrey R. De Wet, Pawcatuck, Conn.; David W. Ow, Hercules, Calif., and Stephen H. Howell, Ithaca, N.Y., assignors to The Regents of the University of California, Oakland, Calif.

Division of Ser. No. 60,091, May 10, 1993, Pat. No. 5,583,024, which is a continuation of Ser. No. 792,644, Nov. 15, 1991, abandoned, which is a continuation of Ser. No. 119,096, Nov. 10, 1987, abandoned, which is a continuation-in-part of Ser. No. 803,820, Dec. 2, 1985, abandoned. This application Jun. 2, 1995, Ser. No. 458,828

Int. Cl.^{6} C12N *9/02*

U.S. Cl. 435—189 **26 Claims**

1. A hybrid protein comprising a covalent fusion of a recombinant *Coleoptera luciferase* produced by expressing in a procaryotic or eucaryotic cell, a lysate of said cell, or a cell-free protein translation system a recombinant DNA encoding *Coleoptera luciferase* and a polypeptide having a second biological function, such that said hybrid protein both catalyzes the oxidation of luciferin to yield light and expresses said second biological function.

18. A recombinant *Coleoptera luciferase* produced by expressing in a procaryotic or eucaryotic cell, a lysate of said cell, or a cell-free protein translation system a recombinant RNA encoding *Coleoptera luciferase*, wherein said recombinant *Coleoptera luciferase* catalyzes the oxidation of luciferin to yield light.

5,700,674

MUTANT URICASE, A MUTANT URICASE GENE, A NOVEL RECOMBINANT DNA, AND A PROCESS FOR PRODUCING MUTANT URICASE

Yasuji Koyama, and Toshio Ichikawa, both of Noda, Japan, assignors to Kikkoman Corporation, Chiba, Japan

Filed Aug. 23, 1996, Ser. No. 701,952

Claims priority, application Japan, Aug. 24, 1995, 7-216239

Int. Cl.^{6} C12N *9/06;1/20;* C12P *21/06;* C07H *21/04*

U.S. Cl. 435—191 **4 Claims**

1. An isolated mutant uricase gene coding for a polypeptide containing the amino acid sequence of wild-type uricase shown in SEQ ID NO: 1, wherein the 165–170th amino acids contain a mutated amino acid sequence.

5,700,675

PROTEIN KINASE REQUIRED FOR RAS SIGNAL TRANSDUCTION

Gerry Rubin, Berkeley; Marc Therrien, Union City; Henry Chang, Berkeley; Felix Karim, El Cerrito, and David Wassarman, San Francisco, all of Calif., assignors to Regents of the University of California, Oakland, Calif.

Filed Dec. 13, 1995, Ser. No. 571,758

Int. Cl.^{6} C12N *9/12;* C12P *21/06;* C07K *1/00;* C07H *21/04*

U.S. Cl. 435—194 **7 Claims**

1. An isolated kinase suppressor of ras (Ksr) protein.

5,700,676

MODIFIED SUBSTILISINS HAVING AMINO ACID ALTERATIONS

Richard Ray Bott, Burlingame; Robert Mark Caldwell, San Francisco; Brian C. Cunningham, Piedmont; David Aaron Estell, Mountain View; Scott Douglas Power, San Bruno, and James Allen Wells, San Mateo, all of Calif., assignors to Genencor International Inc., Palo Alto, Calif.

Division of Ser. No. 212,291, Mar. 14, 1994, which is a continuation of Ser. No. 898,382, Jun. 9, 1992, abandoned, which is a continuation of Ser. No. 747,459, Aug. 12, 1991, abandoned, which is a continuation of Ser. No. 540,868, Jun. 14, 1990, abandoned, which is a continuation of Ser. No. 35,652, Apr. 5, 1987, abandoned, which is a continuation-in-part of Ser. No. 858,594, Apr. 30, 1986, abandoned, which is a continuation-in-part of Ser. No. 614,612, May 29, 1984, Pat. No. 4,760,025, Ser. No. 614,615, May 29, 1984, abandoned, Ser. No. 614,617, May 29, 1984, abandoned, and Ser. No. 614,491, May 29, 1984, abandoned. This application Jun. 7, 1995, Ser. No. 486,746

Int. Cl.[6] C11D *7/42;* **C12N** *9/52;9/56;15/75*

U.S. Cl. 435—221 **57 Claims**

1. A substantially pure subtilisin modified by a substitution of at least one amino acid at a residue position with a different naturally occurring amino acid, said residue position being selected from the group of equivalent amino acid residues of subtilisin naturally produced by *Bacillus amyloliquefaciens* consisting of Ile107, Lys170, Tyr171, Pro172, Lys213, His67, Leu135, Gly97, Leu126, Gly127, Gly128, Pro129, Tyr214 and Gly215 wherein the subtilisin which is modified is selected from the group consisting of subtilisins derived from procaryotes, yeast and fungi.

5,700,677

PROTEIN ANALOGUES OF TISSUE PLASMINOGEN ACTIVATOR

Roberto Crea, Burlingame, Calif.; Roy Hui Lol Pang, Medway, Mass.; Hermann Oppermann, San Francisco, Calif.; Peter C. Keck, Millbury, Mass.; Gabriel Alvarado-Urbina, Nepean, Canada; Gay-May Wu, Westboro, and Charles M. Cohen, Medway, both of Mass., assignors to Creative BioMolecules, Inc., Hopkinton, Mass., and A. Menarini S.A.S., Firenzi, Italy

Continuation of Ser. No. 562,454, Aug. 2, 1990, abandoned, which is a continuation of Ser. No. 845,541, Mar. 28, 1986, abandoned. This application Nov. 27, 1991, Ser. No. 799,769

Int. Cl.[6] C12N *15/00;* **C07K** *14/745;* **A61K** *38/49*

U.S. Cl. 435—226 **12 Claims**

1. An analogue of tissue plasminogen activator (tPA) of the formula:

$$H_2N—X—L—CF_{tPA}—COOH$$

wherein CF_{tPA} represents a catalytic fragment of tPA;

X represents a fibrin binding domain of protein A present in single or multiple units; and

L represents a peptide bond linkage between X and CF_{tPA} or an oligopeptide linking X and CF_{tPA}, wherein said analogue possesses fibrinolytic and fibrin-binding activities.

5,700,678

PROTEIN DISULFIDE-ISOMERASE AND PRODUCTION THEREOF

Kumao Toyoshima, Setagaya; Ryuya Horiuchi, Seta-gun; Kiyoshi Yamauchi, Shizuoka; Tadashi Yamamoto, Kanagawa, and Koichi Igarashi, Kyoto, all of Japan, assignors to Takeda Chemical Industries, Ltd., Osaka, Japan

Continuation of Ser. No. 635,812, Jan. 2, 1991, abandoned, which is a continuation of Ser. No. 199,307, May 26, 1988, abandoned. This application Nov. 25, 1992, Ser. No. 982,138

Claims priority, application Japan, Jun. 1, 1987, 62-138628; Sep. 18, 1987, 62-235492; Oct. 5, 1987, 62-251144

Int. Cl.[6] C12N *1/19;1/21;9/90;* **C12P** *21/04*

U.S. Cl. 435—233 **24 Claims**

21. A method for expressing a biologically active polypeptide, wherein said biologically active polypeptide comprises the amino acid sequence of FIG. 3, which method comprises the step of: cultivating a transformed animal cell or a transformed microorganism belonging to genus Escherichia or genus Saccharomyces, wherein said transformed animal cell or said transformed microorganism is transformed with a recombinant vector, wherein said recombinant vector comprises a nucleotide sequence encoding said biologically active polypeptide, which nucleotide sequence is operably linked to a promoter sequence, and wherein said recombinant vector replicates and expresses said biologically active polypeptide in said animal cell or microorganism.

5,700,679

LIPID VESICLES HAVING A BILAYER CONTAINING A SURFACTANT WITH ANTI-VIRAL AND SPERMICIDAL ACTIVITY

D. Craig Wright, Gaithersburg, Md., assignor to Novavax, Inc., Columbia, Md.

Filed Jun. 7, 1996, Ser. No. 661,051

Int. Cl.[6] C12N *7/06;* **A61L** *15/48*

U.S. Cl. 435—238 **61 Claims**

1. A method of inactivating spermatozoa comprising the step of exposing said spermatozoa to a latex-compatible lipid vesicle formulation having topical spermicidal activity; said lipid vesicle formulation containing lipid vesicles having an outer bilayer wherein, said lipid vesicles include a non-ionic amphiphile, an oil, a sterol, and a spermicidal surfactant, wherein said lipid vesicles are formed primarily of said non-ionic amphiphile, wherein said non-ionic amphiphile, said oil and said spermicidal surfactant are selected such that said spermicidal surfactant is not dissolvable in said oil and at least a portion of said spermicidal surfactant is in the outer bilayer of said lipid vesicle.

5,700,680

FUSION PROTEINS

Susan Elizabeth Newton, Werribee, Australia, and Berwyn Ewart Clarke, Beckenham, England, assignors to Glaxo Wellcome Inc., Research Triangle Park, N.C.

Continuation of Ser. No. 116,557, Sep. 7, 1993, abandoned, which is a continuation of Ser. No. 856,806, Mar. 24, 1992, abandoned, which is a continuation of Ser. No. 545,766, Jun. 28, 1990, abandoned, which is a continuation of Ser. No. 12,943, Feb. 10, 1987, abandoned. This application Jun. 6, 1995, Ser. No. 471,266

Int. Cl.[6] C12N *5/10;15/86;* **C07H** *21/04*

U.S. Cl. 435—240.2 **17 Claims**

1. A DNA sequence encoding a fusion protein which comprises influenza virus haemagglutinin (HA) and, at antigenic site A of HA, a heterologous epitope, wherein all or part of said antigenic site is replaced by said epitope and said protein presents said epitope in a manner recognizable by an immune system.

5,700,681

SELECTION OF CELLS HAVING INCREASED CELL ADHESION PROPERTIES

Michael D. Pierschbacher; Erkki I. Ruoslahti, both of San Diego, Calif., and Shoukat Dedhar, North Vancouver, Canada, assignors to La Jolla Cancer Research Foundation, La Jolla, Calif.

Continuation of Ser. No. 683,482, Apr. 9, 1991, abandoned, which is a continuation of Ser. No. 102,021, Sep. 28, 1987, abandoned. This application Dec. 20, 1994, Ser. No. 359,956

Int. Cl.[6] C12N *5/06;* **C07K** *14/00*

U.S. Cl. 435—240.21 **20 Claims**

1. A method for promoting differentiation of animal cells and preventing a differentiated state of animal cells from defifferentiating, comprising the steps of:

a. providing an initial sample of said animal cells;

b. culturing said animal cells in culture media containing an initial concentration of an RGD containing adhesion ligand in solution,

wherein said RGD-containing adhesion ligand binds to RGD binding receptors on the surface of said animal cells which inhibits the adhesive function of said receptors, and wherein said initial concentration is selected so that not every receptor is bound;

c. choosing those cells which proliferate in the presence of said initial concentration of said RGD containing adhesion ligand in solution;

d. successively reculturing the chosen cells in culture media containing successively increasing concentrations of said adhesion ligand in solution;

e. selecting those cells which proliferate in concentrations of said adhesion ligand in solution normally inhibitory to cell proliferation; and

f. establishing from the selected cells a cell line which is more differentiated than said initial sample of animal cells.

5,700,682

MECHANISM BASED SCREEN FOR RETINOID X RECEPTOR AGONISTS AND ANTAGONISTS

Paul Mak, East Windsor, N.J., and Sotirios K. Karathanasis, Rockland, N.Y., assignors to American Cyanamid Company, Madison, N.J.

Continuation of Ser. No. 999,071, Dec. 31, 1992. This application Jun. 6, 1995, Ser. No. 465,783

Int. Cl.[6] C12N *1/21*

U.S. Cl. 435—252.3 **11 Claims**

1. A prokaryotic or eukaryotic host cell stably transformed or transfected by an expression vector containing a cDNA sequence encoding a retinoid X receptor and a reporter plasmid containing an apolipoprotein AI gene site A mutant comprising a nucleotide sequence selected from the group consisting of SEQ ID NOS: 7–15 and 17.

5,700,683

VIRULENCE-ATTENUATING GENETIC DELETIONS DELETED FROM MYCOBACTERIUM BCG

Charles Kendall Stover, Mercer Island, and Gregory G. Mahairas, Seattle, both of Wash., assignors to PathoGenesis Corporation, Seattle, Wash.

Filed Feb. 17, 1995, Ser. No. 390,878

Int. Cl.[6] C07H *21/02;21/04;* **C12N** *1/21;* **C12Q** *1/68*

U.S. Cl. 435—252.31 **57 Claims**

1. An isolated marker for an avirulent mycobacterium, said marker comprising a first nucleic acid that specifically hybridizes under stringent conditions with a second nucleic acid or a complement of said second nucleic acid where said second nucleic acid or complement of said second nucleic acid is selected from the group consisting of BCGΔ1a (SEQ ID NO: 1), BCGΔ1b (SEQ ID NO: 2), BCGΔ2a (SEQ ID NO: 3), BCGΔ2b (SEQ ID NO: 4), BCGΔ3a (SEQ ID NO: 5), BCGΔ3b (SEQ ID NO: 6), BCGΔ1ab (SEQ ID NO: 7), BCGΔ2ab (SEQ ID NO: 8), BCGΔ3ab (SEQ ID NO: 9), BCGΔ1 (between nucleotide 2327 and nucleotide 11126 of SEQ ID NO: 16), BCGΔ3 (between nucleotide 1406 and nucleotide 10673 of SEQ ID NO: 18), ORF 2B2 (nucleotides 3003–3590 of SEQ ID NO: 17), ORF 2C (nucleotides 5187–6134 of SEQ ID NO: 17), ORF 2D (nucleotides 6561–7217 of SEQ ID NO: 17), ORF 2E (nucleotides 8036–8560 of SEQ ID NO: 17), ORF 2F (nucleotide 9941–10909 of SEQ ID NO: 17), ORF 2H (nucleotides 11965–13407 of SEQ ID NO: 17), ORF 2I (nucleotides 13376–14221 of SEQ ID NO: 17), ORF 2J (nucleotides 7211–8259 of SEQ ID NO: 17), ORF 2K (nucleotides 4327–4992 of SEQ ID NO: 17), and ORF 2L (nucleotides 4521–5117 of SEQ ID NO: 17);

wherein said marker specifically hybridizes under stringent conditions to a nucleic acid from BCG, but not to a nucleic acid from *Mycobacterium tuberculosis* or *Mycobacterium bovis*, or where said marker specifically hybridizes under stringent conditions to a nucleic acid from *Mycobacterium tuberculosis* or *Mycobacterium bovis*, but not to a nucleic acid from BCG.

5,700,684

PROCESS FOR PREPARING A BIOMASS, USE OF THE BIOMASS SO PREPARED, AND PANIFICATION FERMENT

Aloyse Ehret, Blotzheim, France, assignor to Agrano AG, Allschwil, Switzerland

Filed May 15, 1995, Ser. No. 440,768

Claims priority, application European Pat. Off., May 27, 1994, 94810306

Int. Cl.[6] A23L *1/28;1/221;* **C12N** *1/20*

U.S. Cl. 435—255.2 **17 Claims**

1. A process for preparing a biomass on a culture medium, the biomass being directly useable as a panification ferment without separating the biomass from the culture medium and without the addition of industrial yeast, said process comprising:

obtaining the culture medium;

inoculating the culture medium with at least one strain of yeast and at least one strain of lactic acid bacteria;

providing an air supply;

cultivating the strain of yeast and the strain of lactic acid bacteria on the culture medium in the presence of the air supply; and

recovering the medium containing the biomass;

wherein the culture medium comprises a cereal medium free of any chemical additives obtained by;

preparing a dilute aqueous mixture comprising at least whole-flour or wheat germ, the mixture comprising starch and gluten;

adding at least one alpha-amylase and at least one amyloglucosidase to hydrolyze all of the starch in the mixture into fermentable sugar; and

adding at least one proteolytic enzyme of food quality to gently hydrolyze at least part of the gluten in the mixture, thereby obtaining the culture medium.

5,700,685

SYSTEM TO REDUCE SEDIMENT TOXICITY

Thomas Murphy, Grimsby, Canada, assignor to Her Majesty the Queen in right of Canada, as represented by the Minister of the Environment, Hull, Canada

Continuation-in-part of Ser. No. 419,290, Apr. 10, 1995, Pat. No. 5,481,815, which is a continuation-in-part of Ser. No. 84,620, Jul. 1, 1993, abandoned. This application Nov. 27, 1995, Ser. No. 562,856

Int. Cl.⁶ C12N *1/00;1/38;* **C05C** *3/04*

U.S. Cl. 435—262.5 **22 Claims**

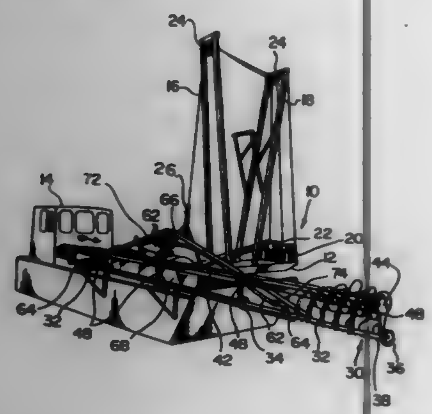

1. A method of effecting natural microbial biodegradation of polynuclear aromatic hydrocarbons and petroleum hydrocarbons in sediment containing microbes and polynuclear aromatic hydrocarbons and petroleum hydrocarbons and microbial toxin inhibiting biodegradation, comprising the steps of:

providing a biochemical oxidant selected from the group comprising ferric chloride and calcium nitrate for detoxifying a microbial toxin produced during microbial biodegradation of said polynuclear aromatic hydrocarbons and petroleum hydrocarbons without inactivating the microbes;

contacting said sediment with said oxidant to detoxify said toxin; and

effecting enhanced microbial biodegradation of said polynuclear aromatic hydrocarbons and petroleum hydrocarbons.

5,700,686

PROTEASE-TREATED AND PURIFIED CELLULASE COMPOSITIONS AND METHODS FOR REDUCING BACKSTAINING DURING ENZYMATIC STONEWASHING

Brian Foody; Colin Nicholson; Jeffrey Tolan, and Theresa White, all of Ottawa, Canada, assignors to Iogen Corporation, Ottawa, Canada

Filed Jun. 6, 1995, Ser. No. 466,424

Int. Cl.⁶ D06M *16/00;* **C12N** *9/42;1/14;1/00*

U.S. Cl. 435—263 **23 Claims**

1. A cellulase enzyme composition that produces low backstaining of indigo-dyed denim relative to a natural Trichoderma cellulase, the enzyme composition comprising a protease-treated Trichoderma cellulase that is a product of a process comprising:

a. subjecting a Trichoderma cellulase containing a cellobiohydrolase enzyme and an endoglucanase enzyme to a limited protease treatment by adding a protease to the cellulase, the limited protease treatment being defined by using a weight ratio of protease to cellulase multiplied by an average treatment time that is substantially between 1.0 and 10,000 gram minutes per gram,

b. stopping the protease reaction by chilling or adjusting the pH, and

c purifying the cellulase by substantially removing the added protease so as to define the composition.

5,700,687

ODOR CONTROL SYSTEM

Larry J. Finn, Gladewater, Tex., assignor to Bedminster Bioconversion Corporation, Marietta, Ga.

Division of Ser. No. 379,896, Jan. 30, 1995, Pat. No. 5,583,045. This application Jun. 3, 1996, Ser. No. 660,165

Int. Cl.⁶ A61L *9/01;* **C12M** *3/00;* **C05F** *11/08*

U.S. Cl. 435—266 **6 Claims**

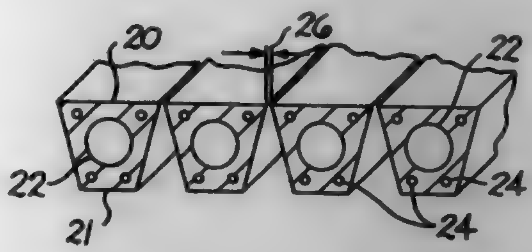

4. A method of deodorizing gases which comprises: placing filtering media on an aeration floor comprised of a series of elongated elements of trapezoidal cross-section the longer parallel sides of which form the aeration floor; placing said elements in side-by-side relation; forming a series of narrow, longitudinally extending, slits between adjacent floor elements; providing plenums underlying said floor in communication with said slits; and providing means for drawing gases into said plenum and forcing said gases through said slits and filtering media.

5,700,688

METHOD FOR PRODUCING ORIENTED CONNECTIVE TISSUE CELLS

Raphael C. Lee, Chicago, Ill., and David Huang, Cambridge, Mass., assignors to Massachusetts Institute of Technology, Cambridge, Mass.

Division of Ser. No. 370,555, Jan. 9, 1995, Pat. No. 5,521,087, which is a continuation of Ser. No. 32,730, Mar. 16, 1993, abandoned, which is a continuation of Ser. No. 349,855, May 10, 1989, abandoned. This application Jun. 7, 1995, Ser. No. 488,134

Int. Cl.⁶ C12M *3/00;* **G01N** *3/00;* **A61B** *17/56*

U.S. Cl. 435—287.1 **1 Claim**

1. A mechanical testing apparatus for determining the mechanical properties of an oriented tissue-equivalent, while simultaneously providing a suitable cell culture environment, comprising:

means for providing a continuous supply of culture medium to the oriented tissue-equivalent;

an incubator;

means for controlling the atmosphere inside said incubator;

means for controlling the temperature inside said incubator;

means for securing the oriented tissue-equivalent;

means for controlling the length of the oriented tissue-equivalent;

means for determining the force generated by the oriented tissue-equivalent;

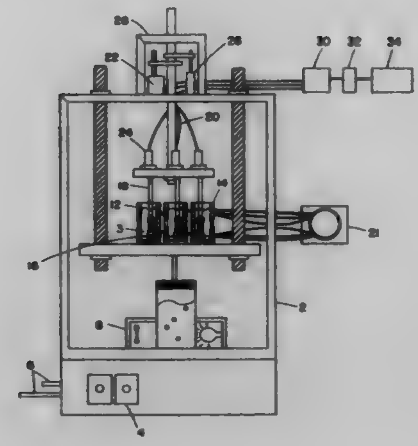

means for determining the length of the oriented tissue-equivalent; and

means for recording force and length measurements.

5,700,689

VENTILATED COMPOSTER

Heinrich Wüster, Unterm Hohen Rain 16, A-6460 Imst, Austria

PCT No. PCT/AT94/00124, § 371 Date Apr. 28, 1995, § 102(e) Date Apr. 28, 1995, PCT Pub. No. WO95/06624, PCT Pub. Date Mar. 9, 1995

PCT Filed Sep. 5, 1994, Ser. No. 433,424

Claims priority, application Austria, Sep. 3, 1993, 1780/93

Int. Cl.⁶ B65D *25/00;90/02*

U.S. Cl. 435—290.1 **12 Claims**

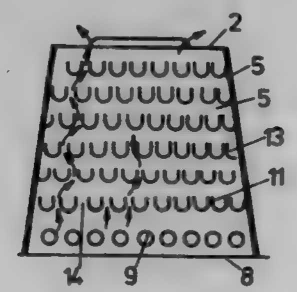

1. A composting device comprising an open-bottomed container having a top end, a bottom end and a side wall extending between the top end and the bottom end, the container having openings to allow venting at the top end, the container comprising

(a) a charging opening at the top end for charging material to be composted into the container,

(b) a discharge opening at the bottom end for discharging compost from the container,

(c) a plurality of venting openings in the side wall at the bottom end, and

(d) a plurality of air-guiding scale-like bosses projecting inwardly from an inner surface of the side wall to form a labyrinth of air flow passages defined therebetween for air entering through the venting openings and flowing along the inner side wall surface while the air-guiding bosses forming the labyrinth brake the air flow,

(1) the air-guiding bosses being arranged in superposed rows, two adjacent ones of the air-guiding bosses in each row respectively defining therebetween short sections of the labyrinth of air flow passages, and a respective one of the air-guiding bosses in a superposed row being arranged above a respective one of the short sections to form a deflector for the air flowing therethrough.

5,700,690

COMPOSITIONS AND METHODS FOR INHIBITING FIBROGENESIS

Eric G. Neilson, Rosemont; Theodore Danoff, Phila.; Hirokazu Okada, Bryn Mawr, all of Pa., and Frank Strutz, Gottingen, Germany, assignors to Trustees of the University of Pennsylvania, Philadelphia, Pa.

Filed May 26, 1995, Ser. No. 452,259

Int. Cl.⁶ C12N *15/63*

U.S. Cl. 435—320.1 **6 Claims**

1. A vector comprising an FSP1 gene promoter sequence contained in Seq. ID No. 1 operably linked to a DNA sequence of interest, wherein said promoter sequence directs transcription of said DNA sequence of interest in mammalian fibroblasts.

5,700,691

METHOD FOR THE PREPARATION OF IN VITRO-DERIVED HUMAN NEUTROPHIL PRECURSOR CELLS

James G. Bender, Lindenhurst; Phillip B. Maples, Waukegan; Stephen Smith, Arlington Heights; Kristen L. Unverzagt, Palatine, and Dennis E. Van Epps, Cary, all of Ill., assignors to Baxter Healthcare Inc., Irvine, Calif.

Continuation of Ser. No. 324,361, Oct. 14, 1994, abandoned, which is a continuation of Ser. No. 855,295, Mar. 23, 1992, abandoned. This application Sep. 13, 1996, Ser. No. 707,762

Int. Cl.⁶ A01N *63/00;* **A61K** *35/14;* **C12N** *5/00;5/02*

U.S. Cl. 435—325 **1 Claim**

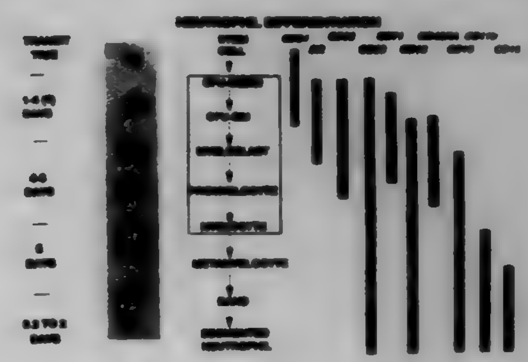

1. A method of preparing an isolated suspension of human neutrophil precursor cells, comprising the steps of:

a. obtaining CD34+ hematopoietic progenitor cells;

b. culturing said progenitor cells in the presence of at least one hematopoietic growth factor for between about 7 to about 14 days so as to obtain a suspension of proliferating human neutrophil precursor cells wherein said suspension comprises at least 16% CD15+CD11b– human neutrophil precursor cells and less than about 5% CD34+ colony forming units, and wherein at least about 60% of said precursors are myeloblasts and promyelocytes; and

c. washing said suspension of cells to obtain an isolated cell suspension.

5,700,692

FLOW SORTER WITH VIDEO-REGULATED DROPLET SPACING

Richard G. Sweet, Palo Alto, Calif., assignor to Becton Dickinson and Company, Franklin Lakes, N.J.

Filed Sep. 27, 1994, Ser. No. 312,592

Int. Cl.⁶ B07C *5/02;* **G01N** *15/00*

U.S. Cl. 436—50 **4 Claims**

3. A method of sorting particles in a suspension comprising the steps of:

serializing said particles in a stream including said suspension, said stream having a flow velocity;

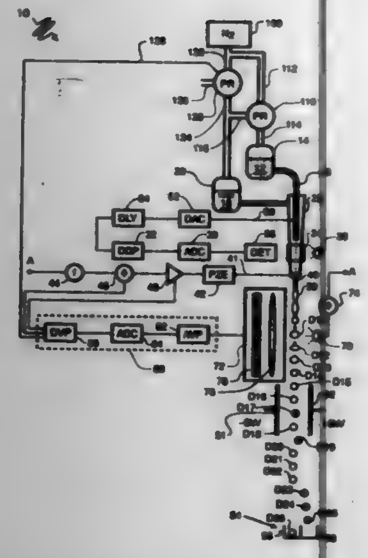

characterizing segments of the stream according to their particle contents so as to provide a characterization of each of said segments;

transporting each segment to a breakoff point;

applying a time-varying electric field to said stream so that the voltage applied is at least in part a function of said characterization of the segment at the breakoff point;

breaking off the segment at the breakoff point so that it forms a droplet having a charge that is a function of the characterization of the respective segment, said droplet having a trajectory;

deflecting the droplets by an angle that is a function of their respective charges;

collecting the droplets so that they are grouped as a function of their deflections;

acquiring an image of a subseries of said droplets after breakoff but before collection;

determining the deviation of the spacing of the centers of gravity of droplets in said image from a target droplet spacing; and

adjusting flow velocity of said stream to reduce any discrepancy between said target spacing of the centers of gravity of droplets and subsequently determined actual spacings of the centers of gravity of droplets.

5,700,693

METHOD TO DETECT BONE AND OTHER CONNECTIVE TISSUE DISORDERS IN HUMANS AND ANIMALS

Simon Peter Robins, Aberdeen, Scotland, assignor to The Rowett Research Institute, Aberdeen, Scotland

Continuation of Ser. No. 41,761, Apr. 2, 1993, abandoned, which is a continuation of Ser. No. 633,379, Dec. 26, 1990, abandoned. This application Jun. 6, 1995, Ser. No. 471,364

Claims priority, application United Kingdom, Dec. 30, 1989, 8929366

Int. Cl.⁶ G01N *33/48*

U.S. Cl. 436—64 **13 Claims**

1. A method of screening for or monitoring a bone resorption disorder in a human subject, comprising,

obtaining a non-hydrolyzed urine sample from the subject,

determining a ratio of native peptide-free, non-glycosylated pyridinoline (N-Pyd)/creatinine, peptide-free deoxypyridinoline (N-Dpd)/creatinine, or both, in the sample, and

comparing the ratio determined with the same ratio for normal subjects, where an elevated ratio provides an indication that the test subject has an above-normal rate of bone resorption.

5,700,694

METHOD TO DETECT BONE AND OTHER CONNECTIVE TISSUE DISORDERS IN HUMANS AND ANIMALS

Simon Peter Robins, Aberdeen, Scotland, assignor to The Rowett Research Institute, Aberdeen, Scotland

Continuation of Ser. No. 41,761, Apr. 2, 1993, abandoned, which is a continuation of Ser. No. 633,379, Dec. 26, 1990, abandoned. This application Jun. 6, 1995, Ser. No. 485,823

Claims priority, application United Kingdom, Dec. 30, 1989, 8929366

Int. Cl.⁶ G01N *33/48*

U.S. Cl. 436—64 **26 Claims**

1. A method to monitor or diagnose the presence of a disorder associated with a connective tissue metabolism abnormality, which method comprises

comparing the level of native free crosslinks derived from collagen in a non-hydrolyzed biological fluid of a human subject with the level of said crosslinks in normal subjects so as to diagnose a subject having an enhanced level of said crosslinks as showing the presence of said disorder,

wherein said crosslinks are selected from native peptide free non-glycosylated pyridinoline (N-Pyd), native peptide-free deoxypyridinoline (N-Dpd), or the sum of N-Pyd and N-Dpd.

5,700,695

SAMPLE COLLECTION AND MANIPULATION METHOD

Zia Yassinzadeh, 11240 Mount Hamilton Rd., San Jose, Calif. 95140, and Paul J. Lingane, Belmont, Calif., assignors to Zia Yassinzadeh, San Jose, Calif.

Filed Jun. 30, 1994, Ser. No. 269,253

Int. Cl.⁶ G01N *1/10*

U.S. Cl. 436—180 **3 Claims**

1. A method for collecting a liquid sample, said method comprising:

contacting a sample port of a receptacle body with the liquid sample, the sample port opening to the ambient atmosphere, the sample port coupled to a thermal pressure chamber by a fluid passageway;

cooling the gas within the thermal pressure chamber thereby drawing a liquid sample into the receptacle body by a partial vacuum created by said cooling of the gas; and

raising and lowering the temperature of the gas within the thermal pressure chamber to move the liquid sample within the receptacle body.

5,700,696

METHOD FOR PREPARATION OF CONJUGATED ARYLENE OR HETEROARYLENE VINYLENE POLYMER AND DEVICE INCLUDING SAME

Edwin Arthur Chandross, Murray Hill; Mary Ellen Galvin-Donoghue, Hopewell Township, Mercer County, and Fotios Papadimitrakopoulos, North Plainville Township, Somerset County, all of N.J., assignors to Lucent Technologies Inc., Murray Hill, N.J.

Filed Nov. 8, 1993, Ser. No. 148,599

Int. Cl.⁶ H01L *51/40*

U.S. Cl. 437—1 **10 Claims**

1. Method for the preparation of conjugated arylene and heteroarylene vinylene polymers which comprises thermal conversion of a precursor polymer of the general formula

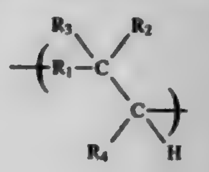

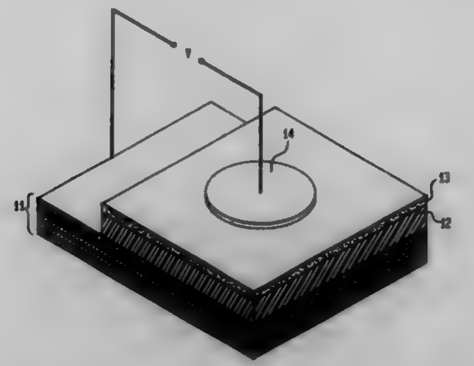

wherein R_1 is selected from the group consisting of benzene, substituted benzene, anthracene, naphthalene and alkyl substituted benzene, and a five member cyclic heterocarbon,

R_2 and R_4 are selected from the group consisting of hydrogen and phenyl groups, and

R_3 is an organic group capable of being eliminated at elevated temperatures to form a double bond, or an OR_5 group wherein R_5 is selected from the group consisting of hydrogen and methyl groups, conversion being effected at a temperature ranging from 150°–300° C. in the presence of forming gas.

5,700,697

METHOD FOR PACKAGING AN INTEGRATED CIRCUIT USING A RECONSTRUCTED PACKAGE

Joseph J. Dlugokecki, Poway, Calif., assignor to Silicon Packaging Technology, San Diego, Calif.

Continuation-in-part of Ser. No. 212,507, Mar. 10, 1994, abandoned, which is a division of Ser. No. 11,957, Feb. 1, 1993, Pat. No. 5,318,926. This application Jun. 6, 1995, Ser. No. 471,739

Int. Cl.⁶ H01L *21/58;21/28;21/48;21/56*

U.S. Cl. 437—8 **20 Claims**

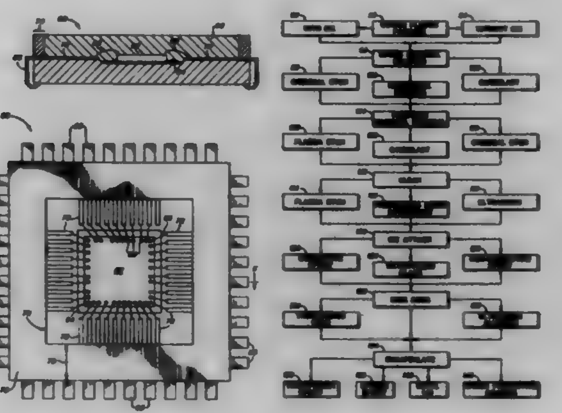

1. A method of packaging an integrated circuit chip, comprising the steps of:

(a) obtaining a circuit package, the package having a lead frame encapsulated in an encapsulating material, the lead frame having a plurality of fingers, each finger having a wire bond pad thereon;

(b) removing the encapsulating material to expose a plurality of the wire bond pads;

(c) mounting a chip within the package, the chip having a plurality of contact pads thereon;

(e) connecting a wire bond between one of the plurality of contact pads on the chip and one of the plurality of wire bond pads; and

(f) encapsulating the chip and the plurality of wire bond pads in an insulating material.

5,700,698

METHOD FOR SCREENING NON-VOLATILE MEMORY AND PROGRAMMABLE LOGIC DEVICES

Radu Barsan, Cupertino, and Jonathan Lin, Milpitas, both of Calif., assignors to Advanced Micro Devices, Inc., Sunnyvale, Calif.

Filed Jul. 10, 1995, Ser. No. 500,295

Int. Cl.⁶ H01L *21/8217;21/66*

U.S. Cl. 437—8 **21 Claims**

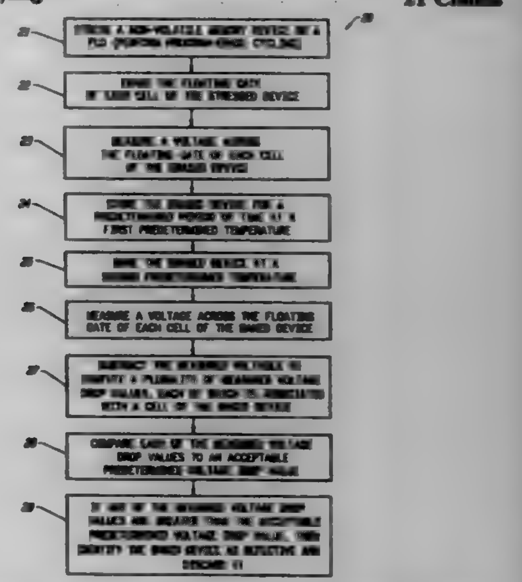

1. A method for screening a semiconductor device having a plurality of non-volatile memory cells, comprising the steps:

a) alternatingly programing and then erasing said device for a number of cycles thereby providing a stressed device;

b) erasing said stressed device thereby providing an erased device;

c) storing said erased device for a fixed period of time at a first temperature thereby providing a stored device;

d) baking said stored device at a second temperature thereby providing a baked device; and

e) determining a first voltage drop value of each cell of said baked device.

5,700,699

METHOD FOR FABRICATING A POLYCRYSTAL SILICON THIN FILM TRANSISTOR

Chul-Hi Han, Daejeon-si; Choong-Ki Kim, Seoul; Jung-Yeal Lee, Daejeon-si, and Kil-Hwan Oh, Kyungki-do, all of Rep. of Korea, assignors to LG Electronics Inc., Seoul, Rep. of Korea

Filed Mar. 16, 1995, Ser. No. 405,501

Int. Cl.⁶ H01L *21/84*

U.S. Cl. 437—21 **10 Claims**

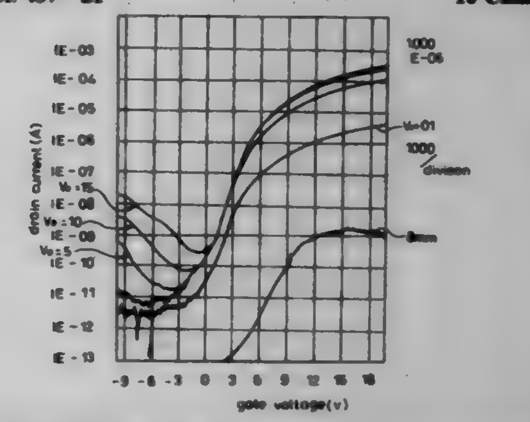

1. A method for fabricating a polycrystalline silicon thin film transistor comprising the steps of:

forming an oxide film on a substrate;
depositing a polycrystalline silicon film on the oxide film and patterning the polycrystalline silicon film so that a source region, a drain region and a channel region remain;
growing a gate insulating layer on the patterned polycrystalline silicon film by using an ECR plasma oxidation;
depositing a material for a gate on the whole surface and removing the material and the gate insulating layer in portions to leave exposed portions of the polycrystalline silicon film except for a gate region to form the gate; and
performing an ion implantation on exposed areas of the polycrystalline silicon film to form the source and drain regions.

5,700,700
TRANSISTOR IN A SEMICONDUCTOR DEVICE AND METHOD OF MAKING THE SAME
Joon Hwang, Mansoung-Myun, Rep. of Korea, assignor to Hyundai Electronics Industries Co., Ltd., Kyungki-Do, Rep. of Korea
Filed Jun. 18, 1996, Ser. No. 665,513
Claims priority, application Rep. of Korea, Jun. 20, 1995, 95-16494
Int. Cl.^{6} **H01L** *21/265*
U.S. Cl. 437—21 **5 Claims**

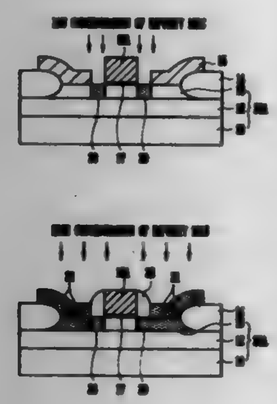

1. A method of making a transistor in a semiconductor device, comprising:
forming a field oxide layer on a field region of a silicon-on-insulator wafer having a silicon layer, an insulating layer and a silicon-on-insulator layer that are formed relative to one another in a stack structure;
forming a first polysilicon layer on a resulting structure after forming said field oxide layer;
patterning said first polysilicon layer so that said first polysilicon layer is on at least a portion of said silicon-on-insulator layer on and a portion of said silicon-on-insulator layer is exposed;
sequentially forming an oxide layer and a second polysilicon layer on a resulting structure after patterning said first polysilicon layer;
forming a gate electrode by etching a selected portion of said second polysilicon layer and said oxide layer;
forming a lightly-doped drain region in said silicon-on-insulator layer;
forming an oxide spacer on both side walls of said gate electrode; and
implanting an impurity ion in said patterned first polysilicon layer and said silicon-on-insulator layer under said patterned first polysilicon layer.

5,700,701
METHOD FOR REDUCING JUNCTION CAPACITANCE AND INCREASING CURRENT GAIN IN COLLECTOR-UP BIPOLAR TRANSISTORS
Darrell Hill, Plano, Tex.; Shou-Kong Fan, Taiwan, China, and Ali Khatibzadeh, Plano, Tex., assignors to Texas Instruments Incorporated, Dallas, Tex.
Continuation-in-part of Ser. No. 969,605, Oct. 30, 1992, abandoned. This application Jun. 7, 1995, Ser. No. 472,081
Int. Cl.^{6} **H01L** *21/265*
U.S. Cl. 437—31 **8 Claims**

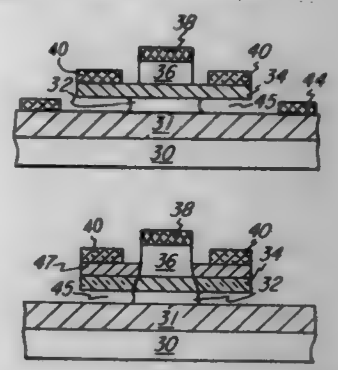

1. A method for fabricating a bipolar transistor, comprising the steps of:
a. forming a collector contact on a material structure including:
i. an emitter layer over a substrate;
ii. a base layer over said emitter layer; and
iii. a collector layer over said base layer;
b. removing upper portions of said collector layer from regions not covered by said collector contact;
c. implanting dopants through a protective layer into lower portions of said collector layer and said base layer not covered by said collector contact;
d. forming a base contact on said lower portions of said collector layer;
e. removing portions of said lower portions of said collector layer and said base layer to expose said emitter layer;
d. removing said emitter layer from beneath portions of said base layer.

5,700,702
METHOD FOR MANUFACTURING AN ACCELERATION SENSOR
Heimut Klose, München; Markus Biebl, Augsburg; Thomas Scheiter, and Christofer Hierold, both of München, all of Germany, assignors to Siemens Aktiengesellschaft, Munich, Germany
PCT No. PCT/DE95/00022, § 371 Date Jul. 17, 1996, § 102(e) Date Jul. 17, 1996, PCT Pub. No. WO95/19572, PCT Pub. Date Jul. 20, 1995
PCT Filed Jan. 10, 1995, Ser. No. 676,282
Claims priority, application Germany, Jan. 18, 1994, 44 01 304.3
Int. Cl.^{6} **H01L** *21/265*
U.S. Cl. 437—34 **9 Claims**

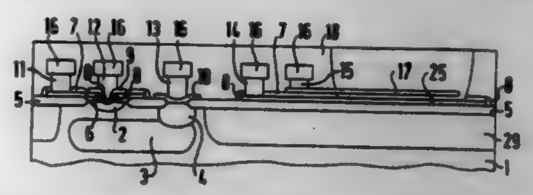

1. A method for manufacturing an acceleration sensor on silicon, comprising the steps of:
producing, in a first step, a structure of doped regions for a transistor, using a substrate layer of silicon;
depositing, in a second step, a polysilicon layer and structuring the polysilicon layer such that said polysilicon layer forms at least one electrode of said transistor and a sensor layer, and

such that said at least one electrode and said sensor layer are separate from one another;
applying in a third step, metallizations as electrical terminals for said transistor, for said sensor layer and for at least one further sensor electrode; and
uncovering in a fourth step, said sensor layer an extent that the sensor layer is at least partially movable in at least one direction.

5,700,703
METHOD OF FABRICATING BURIED CONTROL ELEMENTS IN SEMICONDUCTOR DEVICES
Jenn-Hwa Huang, Gilbert; Christine Thero, Scottsdale, and Kumar Shiralagi, Chandler, all of Ariz., assignors to Motorola, Schaumburg, Ill.
Filed Aug. 6, 1996, Ser. No. 692,687
Int. Cl.^{6} **H01L** *21/265*
U.S. Cl. 437—40 **12 Claims**

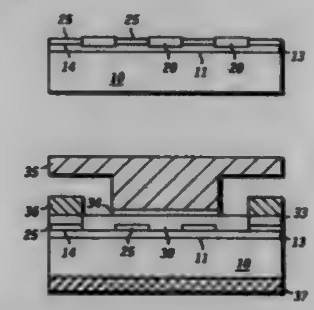

1. A method of fabricating buried control elements in a semiconductor device comprising the steps of:
providing a substrate;
forming an epitaxial layer on the substrate, the epitaxial layer having a surface;
forming a native oxide on the epitaxial layer;
positioning a mask adjacent the surface so as to define a growth area and an unmasked portion on the surface;
selectively directing a bright light onto the unmasked portion of the surface to grow an oxide film on the unmasked portion of the surface;
desorbing the native oxide on the growth area leaving the oxide film;
selectively growing a buried control element layer on the epitaxial layer;
desorbing the oxide film; and
regrowing an epitaxial layer, thereby burying the buried control element layer.

5,700,704
PROCESS FOR FABRICATING A SEMICONDUCTOR INTEGRATED CIRCUIT DEVICE
Shuji Ikeda, Koganei; Satoshi Meguro, Hinode-machi; Soichiro Hashiba, Hamura-machi; Isamu Kuramoto, Higashiyamato; Atsuyoshi Koike, Kokubunji; Katsuro Sasaki, Fuchu; Koichiro Ishibashi, Tokyo; Toshiaki Yamanaka, Iruma; Naotaka Hashimoto, Hachioji; Nobuyuki Moriwaki, Kyoto; Shigeru Takahashi, Hitachioota; Atsushi Hiraishi, Ohme; Yutaka Kobayashi, Katsuta, and Seigoo Yukutake, Hitachi, all of Japan, assignors to Hitachi, Ltd., Tokyo, Japan
Division of Ser. No. 351,173, Nov. 30, 1994, which is a continuation of Ser. No. 11,249, Jan. 29, 1993, abandoned, which is a division of Ser. No. 653,493, Feb. 11, 1991, Pat. No. 5,239,196. This application Jun. 2, 1995, Ser. No. 458,615
Claims priority, application Japan, Feb. 9, 1990, 2-30451; Feb. 9, 1990, 2-30452; Feb. 9, 1990, 2-30453; Feb. 9, 1990, 2-30454; Mar. 2, 1990, 2-49312
Int. Cl.^{6} **H01L** *21/8244*
U.S. Cl. 437—52 **25 Claims**

1. A method of manufacturing a memory cell of a static random access memory, said memory cell including a driver MISFET and

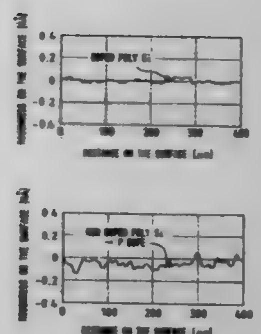

a capacitor element, said capacitor element having a first electrode, a second electrode, and a dielectric film between said first and said second electrode, said driver MISFET having a gate electrode serving as said first electrode of said capacitor element, said method comprising the steps of:
forming a polycrystalline silicon film over a semiconductor substrate by depositing the polycrystalline silicon film by a CVD method and doping the polycrystalline film with an impurity during the deposition to decrease the resistance and the surface roughness of said polycrystalline silicon film,
wherein said first electrode is formed of said polycrystalline silicon film,
wherein said second electrode is formed over an upper surface of said polycrystalline silicon film,
wherein said dielectric film is formed between said upper surface of said polycrystalline silicon film and a lower surface of said second electrode, and
wherein dielectric strength of the dielectric film is improved due to the reduced surface roughness of the polycrystalline silicon film.

5,700,705
SEMICONDUCTOR INTEGRATED CIRCUIT DEVICE
Satoshi Meguro, Hinode-machi; Kiyofumi Uchibori, Kanakura-machi; Norio Suzuki, Koganei; Makoto Motoyoshi, Hachioji; Atsuyoshi Koike, Kokubunji; Toshiaki Yamanaka, Hoeya; Yoshio Sakai, Shiroyama-machi; Toru Kaga, Urawa; Naotaka Hashimoto; Takashi Hashimoto, both of Hachioji; Shigeru Honjou, Gakuenishi-machi, and Osamu Minato, Hinode-machi, all of Japan, assignors to Hitachi, Ltd., Tokyo, Japan
Division of Ser. No. 28,128, Mar. 9, 1993, Pat. No. 5,483,083, which is a division of Ser. No. 837,689, Feb. 19, 1992, Pat. No. 5,194,749, which is a continuation of Ser. No. 625,682, Dec. 12, 1990, abandoned, which is a continuation of Ser. No. 274,490, Nov. 22, 1988, abandoned. This application Jun. 6, 1995, Ser. No. 470,452
Claims priority, application Japan, Nov. 30, 1987, 62-305465; Dec. 23, 1987, 62-324094; Feb. 9, 1988, 63-26641
Int. Cl.^{6} **H01L** *21/8244*
U.S. Cl. 437—52 **31 Claims**

1. A method of manufacturing memory cells, each of said memory cells including cross-coupled first and a second inverter circuit, said first inverter circuit including a first drive MISFET and a first load MISFET coupled in series, and said second inverter circuit including a second drive MISFET and a second load MISFET coupled in series, said method comprising the steps of:
forming said drive MISFETs each having a source region and a drain region both of n-type conductivity formed in a semiconductor substrate, a gate insulating film formed over a main

surface of said semiconductor substrate, and a gate electrode formed over said gate insulating film;
forming a first insulating film over the gate electrodes of said drive MISFETs so as to cover said main surface;
forming first polycrystalline silicon films over said first insulating film,
wherein each of said first polycrystalline silicon films formed serves as a gate electrode of a load MISFET and is patterned to effect electrical connections in such a manner that the gate electrodes of said first and second load MISFETs, in each memory cell, are electrically connected to the drain regions of said second and first drive MISFETs, respectively; and
forming second polycrystalline silicon films over said first insulating film,
wherein each of said second polycrystalline silicon films serves as a drain region of p-type conductivity and a source region of a load MISFET and is patterned to effect electrical connections, in each memory cell, in such a manner that the drain region of one of said first and second load MISFETs is electrically connected to the drain region of the drive MISFET corresponding to the same inverter circuit through a first polycrystalline silicon film corresponding to the gate electrode of the other one of said first and second load MISFETs.

5,700,706
SELF-ALIGNED ISOLATED POLYSILICON PLUGGED CONTACTS
Werner Juengling, Boise, Id., assignor to Micron Technology, Inc., Boise, Id.
Filed Dec. 15, 1995, Ser. No. 572,949
Int. Cl.⁶ H01L *21/70*
U.S. Cl. 437—52 25 Claims

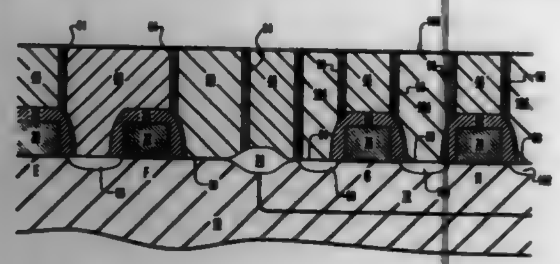

1. A method for preparing an integrated circuit structure, said integrated circuit structure including a doped silicon substrate, and MOS device sealed under a layer of nitride having substantially vertical sides thereto and being in contact with the silicon substrate, there being a bitline contact on one side of the MOS device and a cellnode contact on an opposite side of the MOS device, the bitline and cellnode contacts being on the doped silicon substrate, the method comprises the steps of:
(a) applying a passivation layer of oxide over the doped silicon substrate, the bitline contact, the cellnode contact and the MOS device;
(b) applying a first layer of photoresist over the passivation layer of oxide;
(c) exposing that the portion of the first layer of photoresist that is situated above and vertically aligned with the cellnode contact and at least a portion of the MOS device, and leaving unexposed that the portion of the first layer of photoresist that is above and vertically aligned with the bitline contact;
(d) developing the first layer of photoresist;
(e) etching with a first etch chemistry selective to nitride, silicon, and polysilicon through the passivation layer of oxide to expose the cellnode contact;
(f) depositing a first layer of thin nitride film over the passivation oxide layer and the cellnode contact;
(g) etching anisotropically with a second etch chemistry the first layer of thin nitride film so as to form a substantially vertically oriented nitride spacer above the MOS device;
(h) applying a first conductive layer over the doped silicon substrate, the MOS device, passivation layer of oxide layer, and cellnode contact;
(i) applying a second layer of photoresist over the integrated circuit structure;
(j) exposing that the portion of the second layer of photoresist that is situated above and vertically aligned with: the bitline contact and at least a portion of the MOS device, and leaving unexposed that the portion of the second layer of photoresist that is above and vertically aligned with the cellnode contact;
(k) developing the second layer of photoresist;
(l) etching with a third etch chemistry through the first conductive layer with selectivity to oxide and to nitride;
(m) etching with a fourth etch chemistry selective to nitride, polysilicon, and silicon through the passivation layer of oxide to expose the bitline contact;
(n) depositing a second layer of thin nitride film;
(o) etching anisotropically with a fifth etch chemistry the second layer of thin nitride film;
(p) depositing a second conductive layer over the bitline contact and at least a portion of the MOS device; and
(q) performing a chemical-mechanical polishing step, whereby the first conductive layer forms a cellnode plug to the cellnode contact, the second conductive layer forms a bitline plug to the bitline contact, the cellnode plug and the bitline plug being separated by the nitride spacer above the MOS device.

5,700,707
METHOD OF MANUFACTURING SRAM CELL STRUCTURE HAVING A TUNNEL OXIDE CAPACITOR
Hsiao-Lun Bob Lee, Sunnyvale, Calif., assignor to Chartered Semiconductor Manufacturing Pte Ltd., Singapore, Singapore
Filed Jun. 13, 1996, Ser. No. 663,579
Int. Cl.⁶ H01L *21/824*
U.S. Cl. 437—52 18 Claims

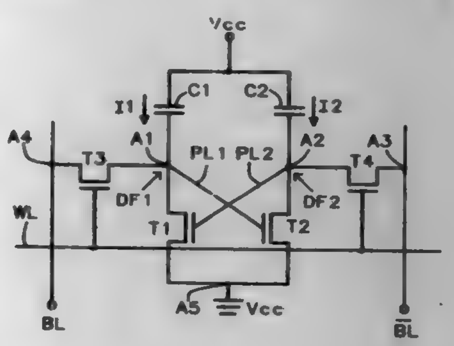

1. A method of forming an SRAM transistor cell on a doped semiconductor substrate by the steps as follows:
forming a first access transistor and a second access transistor, each having a source region, a drain region and a control gate electrode,
forming a first storage transistor and a second storage transistor each having a source region, a drain region and a control gate electrode,
forming a first node and a second node,
forming a first load capacitor having a tunnel oxide layer with one plate connected to said first node and the other plate thereof connected to said power supply connection,
forming a second load capacitor having a tunnel oxide layer with one plate connected to said second node and the other plate thereof connected to said power supply connection,
forming a bit line and a bit line bar,
forming first and second interconnection lines,
said first storage transistor having the drain region thereof connected to said first node,
said second storage transistor having the drain region thereof connected to said second node,

said first and second storage transistors having the source regions thereof connected together,
said first node cross connected via said first interconnection line to the control gate electrode of said second transistor,
said second node cross connected via said second interconnection line to the control gate electrode of said first transistor,
said control gate electrodes of said first and second access transistors connecting to a wordline,
connecting said drain region of said first access transistor to said first node,
connecting said drain region of said second access transistor to said second node,
connecting said source region of said first access transistor to said bit line, and
connecting said source region of said second access transistor to said bit line bar.

5,700,708
PROCESS FOR FABRICATING STORAGE CAPACITOR FOR DRAM MEMORY CELL
Hwi-Huang Chen, and Gary Hong, both of Hsinchu, Taiwan, assignors to United Microelectronics Corporation, Hsinchu, Taiwan
Filed Jun. 18, 1996, Ser. No. 665,386
Claims priority, application Taiwan, May 6, 1996, 85105360
Int. Cl.⁶ H01L *21/8242*
U.S. Cl. 437—52 12 Claims

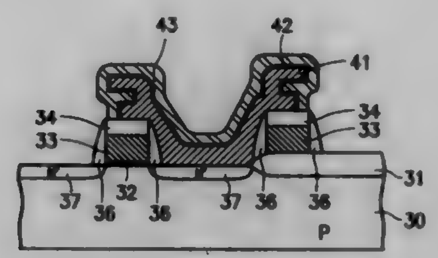

1. A process for fabricating a storage capacitor for a memory cell unit of a dynamic random access memory semiconductor device, comprising the steps of:
(a) forming a transistor, including a gate and a drain/source region on a silicon substrate, the gate including a first polysilicon layer covered by an insulating layer;
(b) forming a silicon nitride layer directly on and covering the transistor;
(c) forming a silicon oxide layer on the silicon nitride layer;
(d) forming a contact opening in the silicon oxide layer and the silicon nitride layer to expose a surface of the drain/source region, wherein the silicon oxide layer has an edge portion that extends toward a cavity of the contact opening more than an edge portion of the silicon nitride layer extends toward the cavity;
(e) forming a second polysilicon layer in the contact opening and covering the exposed drain region and the edge portions of the silicon oxide and silicon nitride layers, the second polysilicon layer forming a first electrode of the storage capacitor;
(f) forming a dielectric layer on the second polysilicon layer, the dielectric layer forming the dielectric of the storage capacitor; and
(g) forming a third polysilicon layer on the dielectric layer, the third polysilicon layer forming a second electrode of the storage capacitor.

5,700,709
METHOD FOR MANUFACTURING A CAPACITOR FOR A SEMICONDUCTOR DEVICE
Won-mo Park, and Jong-jin Lee, both of Seoul, Rep. of Korea, assignors to Samsung Electronics Co., Ltd., Suwon, Rep. of Korea
Continuation of Ser. No. 442,445, May 16, 1995, abandoned, which is a division of Ser. No. 347,246, Nov. 23, 1994, Pat. No. 5,443,993. This application Oct. 25, 1995, Ser. No. 547,901
Claims priority, application Rep. of Korea, Nov. 24, 1993, 93-25136
Int. Cl.⁶ H01L *21/8242*
U.S. Cl. 437—60 8 Claims

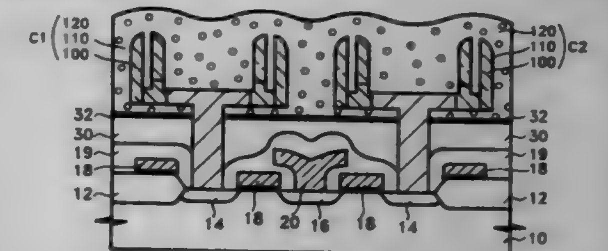

1. A method for manufacturing at least one capacitor for a semiconductor device including a semiconductor substrate having a multi-layer gate and insulation structure formed thereon, comprising the steps of:
forming a first conductive layer on the gate and insulation structure, said first conductive layer including a portion extending through a contact hole provided in the gate and insulation structure to thereby electrically connect said first conductive layer with an active region of a transistor formed in the substrate;
forming a first pattern having a step portion by etching said first conductive layer;
forming a first material layer on said first pattern;
forming a spacer on said step portion of said first pattern by anisotropically etching said first material layer;
forming a second pattern by partially etching said first pattern using said spacer as an etching mask;
forming a second conductive layer on a first resultant structure produced by the preceding steps;
forming a cylindrical storage electrode by anisotropically etching said second conductive layer; and
removing said spacer.

5,700,710
PROCESS OF FABRICATING CAPACITOR HAVING WAVED ROUGH SURFACE OF ACCUMULATING ELECTRODE
Masanobu Zenke, Tokyo, Japan, assignor to NEC Corporation, Tokyo, Japan
Filed Nov. 6, 1995, Ser. No. 553,981
Claims priority, application Japan, Nov. 11, 1994, 6-277778
Int. Cl.⁶ H01L *21/70*
U.S. Cl. 437—60 14 Claims

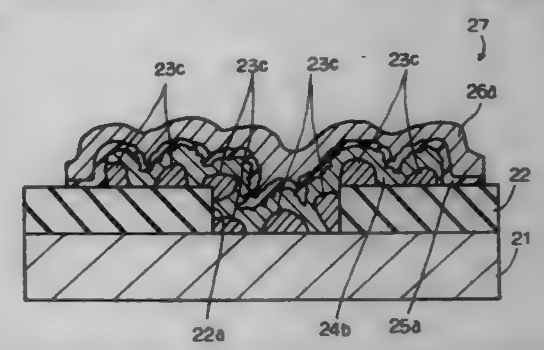

1. A process of fabricating a capacitor, comprising the steps of:
a) preparing a lower structure where said capacitor is fabricated;

b) forming a first doped polysilicon layer having first crystal grains on said lower structure;

c) separating said first doped polysilicon layer into a plurality of doped silicon pieces silicon pieces by etching;

d) covering said plurality of doped silicon pieces with a second doped polysilicon layer having second crystal grains, said second crystal grains comprising smaller crystal grains than said first crystal grains, said plurality of doped silicon pieces causing said second doped polysilicon layer to wave at first intervals;

e) roughening a surface portion of said second doped polysilicon layer by etching so as to wave at second intervals, said second intervals being smaller than said first intervals;

f) successively forming a dielectric film structure and a conductive layer on said second doped polysilicon layer so as to form a laminated structure of said second polysilicon layer covering said plurality of doped silicon pieces, said dielectric film structure and said conductive layer; and

g) patterning said laminated structure into said storage capacitor, wherein the second polysilicon layer and the first silicon pieces are patterned into an accumulating electrode.

5,700,711

METHOD OF MANUFACTURING AN SRAM LOAD SHIELD

Chen-Chung Hsu, Taichung; Tzun-Tsai Chang, Hsin-Chu, both of Taiwan, and Larry Lin, Cupertino, Calif., assignors to United Microelectronics Corporation, Hsin-Chu City, Taiwan

Filed Oct. 22, 1996, Ser. No. 735,222

Int. Cl.⁶ H01L *21/70*

U.S. Cl. 437—60 **16 Claims**

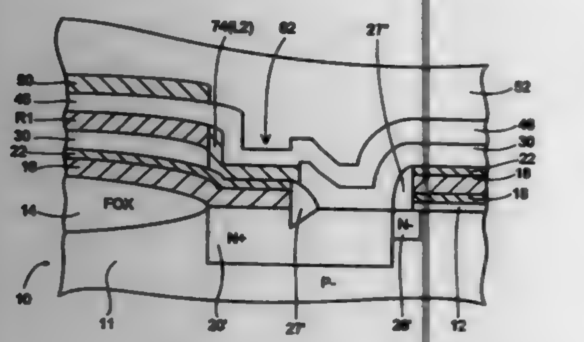

1. A method of forming an SRAM device, including the steps of:

forming a polycrystalline silicon structure over a memory cell of the SRAM device;

forming a load mask over the polycrystalline silicon structure covering a region where a load structure is to be formed, the load mask being patterned using a master load mask;

doping regions of the polycrystalline silicon structure not covered by the load mask;

forming a blanket dielectric layer over the SRAM device covering the polycrystalline silicon structure and other exposed surfaces of the SRAM device; and

forming a dummy conductor structure on the blanket dielectric layer,

whereby the dummy conductor structure protects the polycrystalline silicon load resistor during subsequent processing steps.

5,700,712

METHOD FOR MANUFACTURING AN INSULATING TRENCH IN AN SOI SUBSTRATE FOR SMARTPOWER TECHNOLOGIES

Udo Schwalke, Heldenstein, Germany, assignor to Siemens Aktiengesellschaft, Munich, Germany

Continuation of Ser. No. 264,141, Jun. 21, 1994, abandoned. This application Nov. 3, 1995, Ser. No. 552,976

Claims priority, application Germany, Jun. 23, 1993, 43 20 885.1

Int. Cl.⁶ H01L *21/76*

U.S. Cl. 437—62 **10 Claims**

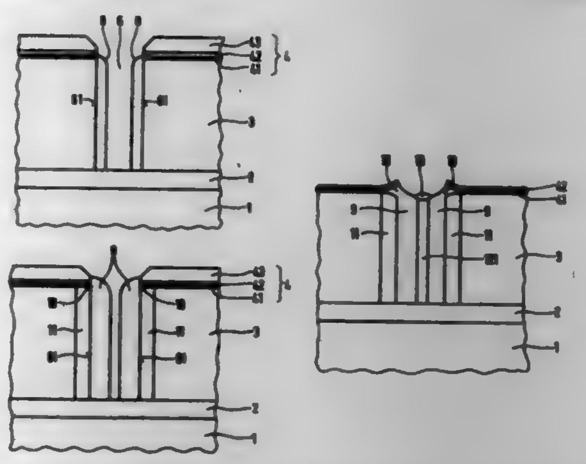

1. Method for producing an insulation trench in a SOI substrate having integrated logic components and high-voltage power components, said method comprising the steps of:

providing an SOI substrate with a monocrystalline silicon wafer, an insulating layer of SiO_2 oriented thereon, and a monocrystalline silicon layer oriented on said insulating layer;

producing a trench mask on a surface of said silicon layer, said trench mask comprising SiO_2 at least at said surface of said silicon layer, and etching, by selective etching relative to SiO_2, a trench in said silicon layer extending to said insulating layer using said trench mask;

producing a doped silicon structure from amorphous silicon that at least covers sidewalls of said trench;

depositing said doped silicon structure by selective silicon deposition at perpendicular sidewalls of said monocrystalline layer that form said sidewalls of said trench;

producing diffusion regions neighboring said trench in said monocrystalline silicon layer by drive-out of dopant from said doped silicon structure in an oxidizing atmosphere; and

producing an insulation structure in said trench by oxidation of said doped silicon structure so that said oxidation of said doped silicon structure so that said oxidation of said doped silicon structure occurs simultaneously with said drive-out of dopant.

5,700,713

LIGHT EMITTING SEMICONDUCTOR DEVICE USING GROUP III NITRIDE COMPOUND AND METHOD OF PRODUCING THE SAME

Shiro Yamazaki; Naoki Shibata, and Masayoshi Koike, all of Aichi-ken, Japan, assignors to Toyoda Gosei Co., Ltd., Nishikasugai-gun, Japan

Filed Mar. 20, 1995, Ser. No. 406,415

Claims priority, application Japan, Mar. 22, 1994, 6-076513

Int. Cl.⁶ H01L *21/20*

U.S. Cl. 437—129 **10 Claims**

1. A method of producing a light-emitting semiconductor device comprising the steps of:

growing an n-layer of n-type group III nitride compound semiconductor satisfying the formula $Al_{x1}Ga_{y1}In_{1-x1-y1}N$ wherein $0 \leqq x1 \leqq 1$, $0 \leqq y1 \leqq 1$, and $0 \leqq x1+y1 \leqq 1$;

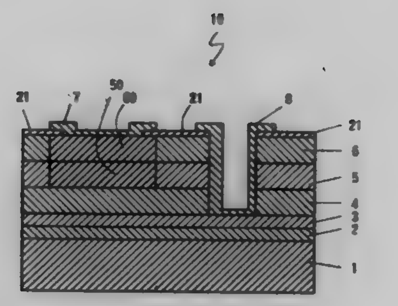

growing an i-layer of semi-insulating group III nitride compound semiconductor satisfying the formula $Al_{x2}Ga_{y2}In_{1-x2-y2}N$ wherein $0 \leqq x2 \leqq 1$, $0 \leqq y2 \leqq 1$, and $0 \leqq x2+y2 \leqq 1$ formed on said n-layer, said i-layer being doped with a p-type impurity;

covering said i-layer with an insulating film except for a selected region thereof; and

annealing said device in a nitrogen atmosphere after covering said i-layer with said insulating film so that said selected region of said i-layer acquires p-type conduction.

5,700,714

DIFFUSION MASK AND FABRICATION METHOD FOR FORMING PN-JUNCTION ELEMENTS IN A COMPOUND SEMICONDUCTOR SUBSTRATE

Mitsuhiko Ogihara; Yukio Nakamura; Masumi Koizumi, and Masumi Taninaka, all of Tokyo, Japan, assignors to Oki Electric Industry Co., Ltd., Tokyo, Japan

Filed Jan. 19, 1996, Ser. No. 588,890

Claims priority, application Japan, Jan. 19, 1995, 7-006139

Int. Cl.⁶ H01L *21/38*

U.S. Cl. 437—167 **20 Claims**

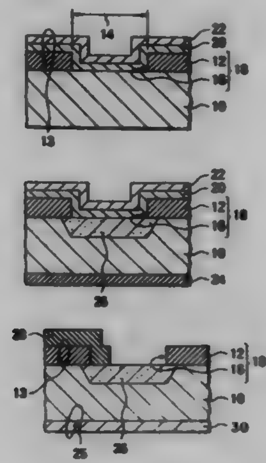

1. A method of fabricating a pn-junction element in a compound semiconductor substrate, comprising the steps of:

forming an aluminum-nitride film on said compound semiconductor substrate;

patterning said aluminum-nitride film to create a diffusion mask with windows;

forming a diffusion source film comprising an impurity on said diffusion mask and windows;

diffusing said impurity from said diffusion source film into said compound semiconductor substrate through said windows by annealing; and

removing said diffusion source film entirely from said diffusion mask and windows, by etching with hydrofluoric acid.

5,700,715

PROCESS FOR MOUNTING A SEMICONDUCTOR DEVICE TO A CIRCUIT SUBSTRATE

Nicholas F. Pasch, Pacifica, Calif., assignor to LSI Logic Corporation, Milpitas, Calif.

Division of Ser. No. 259,439, Jun. 14, 1994, abandoned. This application May 3, 1995, Ser. No. 434,276

Int. Cl.⁶ H01L *21/283;21/58;21/60*

U.S. Cl. 437—183 **10 Claims**

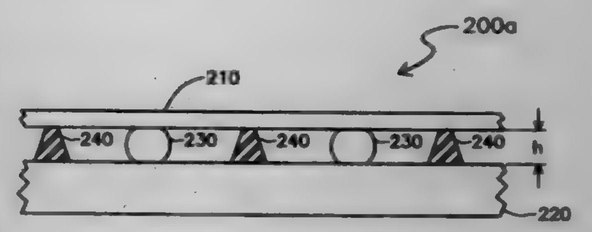

1. A method of making a semiconductor device assembly, comprising the steps of:

providing a semiconductor substrate having a surface;

forming a layer of heat-reflective material on the surface of the semiconductor substrate, the heat-reflective material being electrically insulated from heat producing active devices in the semiconductor substrate;

providing an interconnect substrate having a surface;

forming thermally conductive pillars on the surface of at least one of the substrates, wherein the thermally conductive pillars conduct heat from the semiconductor die to the interconnect substrate;

forming solder bumps on the surface of at least one of the substrates;

positioning the semiconductor substrate so that the surface of the semiconductor substrate faces the surface of the interconnect substrate;

forming interconnections between the surfaces of the substrates with the solder bumps such that the distance between the substrates is determined by the height of the conductive pillars;

providing a guard area on a portion of the surface of the interconnect substrate; and

providing at least one of the thermally conductive pillars such that when the substrates are assembled to one another, the at least one of the thermally conductive pillars extends between the semiconductor substrate and the guard area.

5,700,716

METHOD FOR FORMING LOW CONTACT RESISTANCE CONTACTS, VIAS, AND PLUGS WITH DIFFUSION BARRIERS

Sujit Sharan, and Varatharajan Nagabushnam, both of Boise, Id., assignors to Micron Technology, Inc., Boise, Id.

Filed Feb. 23, 1996, Ser. No. 606,075

Int. Cl.⁶ H01L *21/28*

U.S. Cl. 437—190 **25 Claims**

1. A method of forming a contact structure to provide electrical communication to a semiconductor device on an in-process integrated circuit wafer, the method comprising the steps of:

forming a contact opening through an insulating layer above the semiconductor device, wherein the contact opening defines a sidewall in the insulating layer;

forming a layer of titanium in the bottom of the contact opening;

forming a layer of polysilicon over the titanium layer in the contact opening, the polysilicon layer being doped, whereby the layer of polysilicon contacts the sidewall in the insulating layer; and

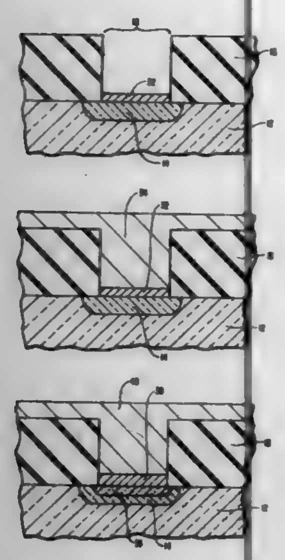

annealing the in-process integrated circuit wafer.

5,700,717

METHOD OF REDUCING CONTACT RESISTANCE FOR SEMICONDUCTOR MANUFACTURING PROCESSES USING TUNGSTEN PLUGS

Edward D. Nowak; Ying-Thong Loh, both of Pleasanton, and Lily Ding, Fremont, all of Calif., assignors to VLSI Technology, Inc., San Jose, Calif.

Filed Nov. 13, 1995, Ser. No. 557,659

Int. Cl.^{6} A01L *21/28*

U.S. Cl. 437—192 22 Claims

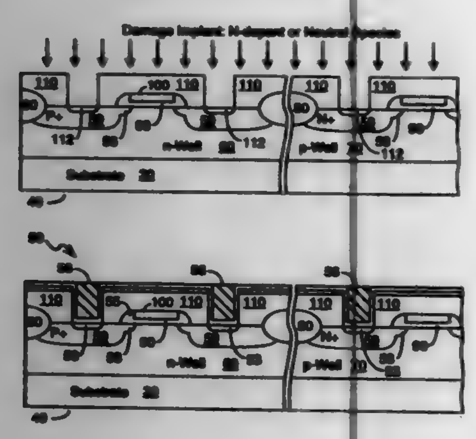

1. A method for reducing the contact resistance associated with tungsten plug contacts to P-doped diffusion regions of a semiconductor device, the steps of the method comprising:
(a) implanting an N-dopant or neutral species into said P-doped diffusion regions, wherein said implanting creates lattice damage within at least a portion of said P-doped diffusion regions such that diffusion of P-dopant within said portions of said P-doped diffusion regions is enhanced.
(b) depositing a first material layer over said P-doped diffusion regions;
(c) depositing a second material layer over said first material layer; and
(d) depositing a tungsten layer over said second material layer to form said tungsten plug contacts.

5,700,718

METHOD FOR INCREASED METAL INTERCONNECT RELIABILITY IN SITU FORMATION OF TITANIUM ALUMINIDE

Allen McTeer, Boise, Id., assignor to Micron Technology, Inc., Boise, Id.

Filed Feb. 5, 1996, Ser. No. 596,639

Int. Cl.^{6} H01L *21/44*

U.S. Cl. 437—192 17 Claims

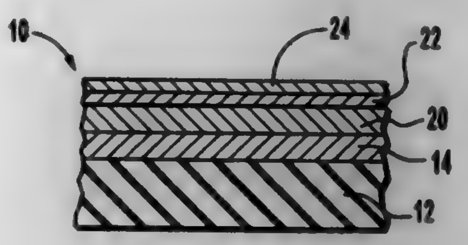

1. A method for formation of titanium aluminide comprising:
providing a silicon substrate;
depositing a titanium layer of a first thickness over the silicon substrate;
depositing an aluminum film of a second thickness over the titanium layer, the second thickness being approximately two to four times greater than the first thickness;
conducting an intermediate anneal of the titanium layer and the aluminum film to form a titanium aluminide layer; and
depositing a further conducting layer directly over the titanium aluminide layer.

5,700,719

SEMICONDUCTOR DEVICE AND METHOD FOR PRODUCING THE SAME

Hiroshi Yuzurihara, Isehara; Shunsuke Inoue, Atsugi; Mamoru Miyawaki, Tokyo, and Shigeyuki Matsumoto, Atsugi, all of Japan, assignors to Canon Kabushiki Kaisha, Tokyo, Japan

Continuation of Ser. No. 22,931, Feb. 26, 1993, abandoned, which is a division of Ser. No. 705,596, May 24, 1991, Pat. No. 5,218,232. This application Mar. 30, 1995, Ser. No. 414,049

Claims priority, application Japan, May 31, 1990, 2-139612

Int. Cl.^{6} H01L *21/443*

U.S. Cl. 437—193 15 Claims

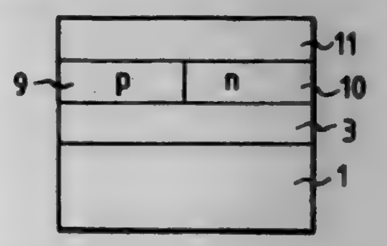

1. A method for producing a semiconductor device comprising the steps of:
forming on a semiconductor substrate a first electrode made of a semiconductor of a first conductivity type for defining a first gate electrode of a PMOS transistor;
forming on said semiconductor substrate a second electrode made of a semiconductor of a second conductivity type different from the first type for defining a second gate electrode of an NMOS transistor; and
depositing a common metal layer selectively on the whole surface of first and second electrodes side by side, to form a composite gate electrode for a CMOS transistor consisting essentially of said PMOS and NMOS transistors.

5,700,720

METHOD OF MANUFACTURING SEMICONDUCTOR DEVICE HAVING MULTILAYER INTERCONNECTION

Hidetsuna Hashimoto, Kawasaki, Japan, assignor to Kabushiki Kaisha Toshiba, Kawasaki, Japan

Filed Dec. 20, 1995, Ser. No. 575,211

Claims priority, application Japan, Dec. 26, 1994, 6-322949

Int. Cl.^{6} H01L *21/44*

U.S. Cl. 437—195 4 Claims

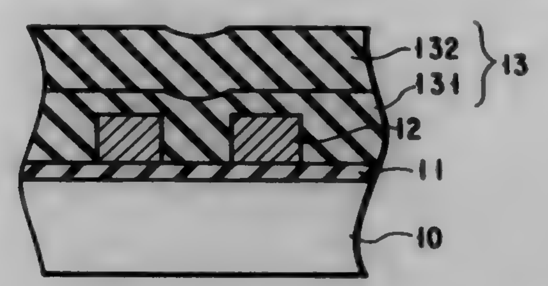

1. A method of manufacturing a semiconductor device having a multilayer interconnection structure comprising the steps of:
forming lower wires on a semiconductor substrate;
forming a first reflow $SiCO_2$ film having a reflow form on the semiconductor substrate and the lower wires by reacting SiH_4 gas with H_2O_2 in a vacuum at 650 Pa or less and at a temperature within a range from −10° to 10° C.;
performing a heat treatment at a high temperature on the semiconductor substrate and said first reflow SiO_2 film;
forming a second reflow SiO_2 film having a reflow form on the first reflow SiO_2 film by reacting SiH_4 gas with H_2O_2 in a vacuum at 650 Pa or less and at a temperature within a range from −10° to 10° C., said heat treatment step performed after the first reflow SiO_2 film forming step and the second reflow SiO_2 film forming step subsequent thereto being respectively performed at least once: and
forming upper wires on the second reflow SiO_2 film.

5,700,721

STRUCTURE AND METHOD FOR METALLIZATION OF SEMICONDUCTOR DEVICES

Hank Hukyoo Shin, Gilbert; Clarence J. Tracy, Tempe; Robert L. Duffin, Mesa; John L. Freeman, Jr., Mesa; Gordon Grivna, Mesa, and Syd R. Wilson, Phoenix, all of Ariz., assignors to Motorola, Inc., Schaumburg, Ill.

Division of Ser. No. 430,105, Apr. 27, 1995, Pat. No. 5,554,889, which is a continuation of Ser. No. 862,710, Apr. 3, 1992, abandoned. This application Jun. 4, 1996, Ser. No. 658,041

Int. Cl.^{6} H01L *21/443*

U.S. Cl. 437—198 8 Claims

1. A method for forming metallization for controlling stress voids on an integrated circuit comprising the steps of: providing a semiconductor substrate having integrated circuitry formed therein; and forming an alloy consisting of aluminum-copper-tungsten on the substrate.

5,700,722

PROCESS FOR FORMING SILICIDE PLUGS IN SEMICONDUCTOR DEVICES

Hirofumi Sumi, Kanagawa, Japan, assignor to Sony Corporation, Tokyo, Japan

Continuation of Ser. No. 101,760, Aug. 4, 1993, abandoned. This application Jan. 25, 1996, Ser. No. 591,913

Claims priority, application Japan, Aug. 6, 1992, P04-229487

Int. Cl.^{6} H01L *21/44*

U.S. Cl. 437—200 3 Claims

1. A process for forming a silicide plug in a semiconductor device, which comprises the steps of:

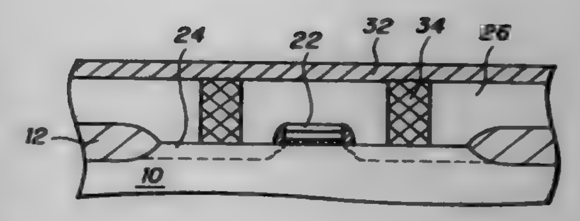

forming an opening in an interlayer insulating layer formed on a lower connection layer;
depositing a single layer of a silicon based material on the interlayer insulating layer and inside said opening and then removing any of said silicon based material located above a top pane of said interlayer insulating layer; and
depositing a metal layer from the group of metals consisting of zirconium, nickel, palladium, copper, gold and silver on the silicon based material deposited inside the opening while maintaining the silicon based material at a temperature at which said silicon based material reacts with said metal to diffuse the metal into the silicon based material, and thereby form a uniform silicide plug inside the opening through the reaction of said silicon based material and said metal.

5,700,723

METHOD OF PACKAGING AN INTEGRATED CIRCUIT

Ivor G. Barber, San Jose, Calif., assignor to LSI Logic Corporation, Milpitas, Calif.

Filed May 15, 1996, Ser. No. 648,350

Int. Cl.^{6} H01L *21/60*

U.S. Cl. 437—214 14 Claims

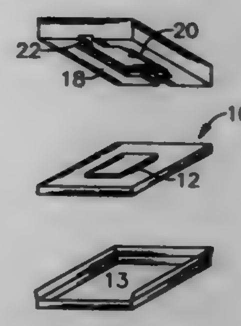

1. A method of packaging an integrated circuit comprising:
connecting the integrated circuit to a substrate,
applying a mold to the substrate, the mold and substrate defining a cavity and at least one covered chase extending from the cavity to the exterior of the applied mold and substrate, the integrated circuit disposed within the cavity, and
injecting a compound into the cavity through one of the covered chases.

5,700,724

HERMETICALLY SEALED PACKAGE FOR A HIGH POWER HYBRID CIRCUIT

Gary Shipe, Cambridge, Md., assignor to Philips Electronic North America Corporation, New York, N.Y.

Filed Aug. 2, 1994, Ser. No. 284,965

Int. Cl.^{6} H01L *21/60*

U.S. Cl. 437—215 10 Claims

1. A method of hermetically sealing a ring frame with inserts to a base, comprising:
selecting a metal ring frame material having a given expansion coefficient at a given temperature,
selecting a brazing alloy having a brazing temperature equal to approximately said given temperature,

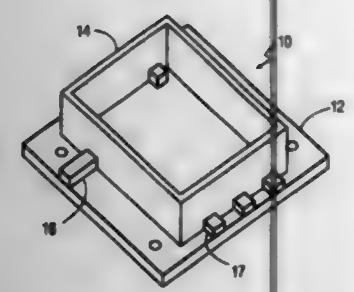

selecting a copper/molybdenum alloy having an expansion coefficient at said given temperature approximately equal to said given expansion coefficient,
providing a base made of said copper/molybdenum alloy, and having a top surface,
providing a ring frame made of said metal ring frame material, having a given plurality of insert openings formed therein along an edge of said ring frame which is sealed to said base,
providing a number of inserts equal to said given plurality, each insert being a respective multi-layer ceramic insert for providing electrical connection from outside said frame to inside said frame,
hermetically sealing each insert in a respective one of said insert openings, and, at substantially the same time,
hermetically sealing said ring frame to said top surface of said base by brazing with said brazing alloy at a temperature at least equal to said given temperature.

5,700,725
APPARATUS AND METHOD FOR MAKING INTEGRATED CIRCUITS
Glenn Roy Hower, Allen Township, Northampton County, and Henry Y. Kumagai, Orefield, both of Pa., assignors to Lucent Technologies Inc., Murray Hill, N.J.
Continuation of Ser. No. 494,429, Jun. 26, 1995, abandoned. This application Jan. 29, 1997, Ser. No. 789,892
Int. Cl.⁶ H01L *21/00;21/318*
U.S. Cl. 437—225 **8 Claims**

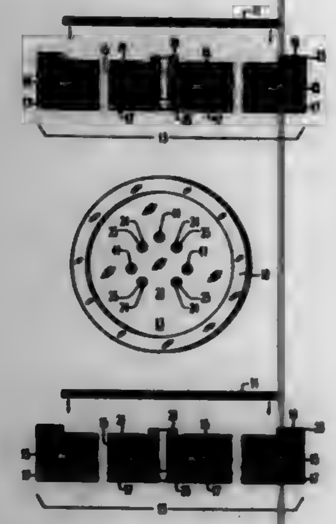

1. A method of integrated circuit manufacture comprising:
supporting a wafer upon at least three protrusions, said protrusions extending from a flat plate and spatially decoupling said wafer from a dc bias supplied to said flat plate;
performing a plasma process upon said wafer while it is supported by said protrusions;
removing said wafer from said protrusions after completion of said plasma process; and
performing a cleaning process upon said plate.

5,700,726
MULTI-LAYERED TUNGSTEN DEPOSITIONS FOR CONTACT HOLE FILLING
Yung-Sheng Huang, Hsin-chu, and Nun-Sian Tsai, Hsinchu, both of Taiwan, assignors to Taiwan Semiconductor Manufacturing Company Ltd, Hsin-chu, Taiwan
Filed Jun. 21, 1996, Ser. No. 668,992
Int. Cl.⁶ H01L *21/283;21/3065*
U.S. Cl. 437—643 **12 Claims**

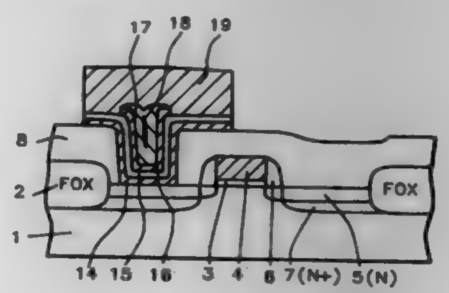

1. A method for fabricating a MOSFET device, on a semiconductor substrate, using two layers of tungsten to fill a contact hole, with said two layers of tungsten exhibiting different removal rates for a specific etch chemistry, comprising the steps of:
providing said underlying conductive region, on said semiconductor substrate;
depositing a dielectric layer on said semiconductor substrate, including depositing said dielectric layer on said underlying conductive region;
photolithographic processing to open a region in a photoresist layer, exposing said dielectric layer, directly over a specific area of said underlying conductive region;
anisotropic etching of said dielectric layer, in opened region of said photoresist layer, to create a small diameter contact hole, to said specific area of said underlying conductive region;
removing said photoresist layer;
depositing a titanium layer on said dielectric layer, on sides of said small diameter contact hole, and on said specific area of said underlying conductive region;
depositing a titanium nitride layer on said titanium layer;
depositing a first tungsten layer on said titanium nitride layer, not completely filling said small diameter contact hole, and grown using conditions that produce a said first tungsten layer that will exhibit a fast removal rate when subjected to a specific dry etch chemistry;
depositing a second tungsten layer on said first tungsten layer, completely filling said small diameter contact hole, and grown using conditions that produce a said second tungsten layer that will exhibit a slow removal rate when subjected to a said specific dry etch chemistry;
removing said second tungsten layer from underlying first tungsten layer, in non-contact hole regions, to expose said first tungsten layer, via use of said specific dry etch chemistry;
removing said first tungsten layer, of said titanium nitride layer, and of said titanium layer, from top surface of said dielectric layer, via use of said specific dry etch chemistry, forming a composite plug of said second tungsten layer, first tungsten layer, titanium nitride layer, and titanium, in said small diameter contact hole;
depositing an interconnect metallization layer on top surface of said dielectric layer, and on surface of said composite plug, in said small diameter contact hole; and
patterning of said interconnect metallization layer to form overlying interconnect metallization structure.

5,700,727
METHOD OF FORMING A THIN FILM TRANSISTOR
Monte Manning, Boise, Id., assignor to Micron Technology, Inc., Boise, Id.
Filed Jul. 24, 1995, Ser. No. 506,084
Int. Cl.⁶ H01L *21/84*
U.S. Cl. 438—156 **10 Claims**

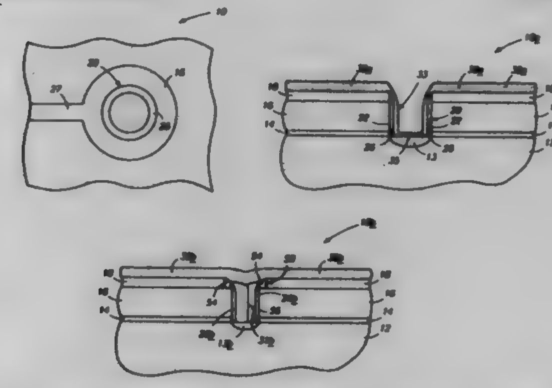

1. A method of forming a thin film transistor comprising the following steps:
providing a substrate having a node to which electrical connection is to be made;
providing a first electrically insulative dielectric layer over the substrate;
providing an electrically conductive gate layer over the first dielectric layer;
providing a second electrically insulative dielectric layer over the electrically conductive gate layer;
providing a contact opening through the second dielectric layer, the electrically conductive gate layer and the first dielectric layer; the contact opening defining projecting sidewalls;
providing a gate dielectric layer within the contact opening laterally inward of the contact opening sidewalls;
providing a layer of semiconductive material over the second dielectric layer and within the contact opening against the gate dielectric layer and in electrical communication with the node; the semiconductive material within the contact opening defining an elongated and outwardly extending channel region the electrical conductance of which can be modulated by means of the adjacent electrically conductive gate and gate dielectric layers; and
conductively doping the semiconductive material layer lying outwardly of the contact opening to form one of a source region or a drain region of a thin film transistor.

5,700,728
METHOD OF FORMING AN MNOS/MONOS BY EMPLOYING LARGE TILT ANGLE ION IMPLANTATION UNDERNEATH THE FIELD OXIDE
Ta-Chi Kuo, Hsin-chu, and Jyh-Kuang Lin, I-Lan, both of Taiwan, assignors to United Microelectronics Corporation, Hsin-chu, Taiwan
Division of Ser. No. 334,956, Nov. 7, 1994, abandoned. This application Nov. 13, 1995, Ser. No. 557,695
Int. Cl.⁶ H01L *21/8238*
U.S. Cl. 438—216 **18 Claims**

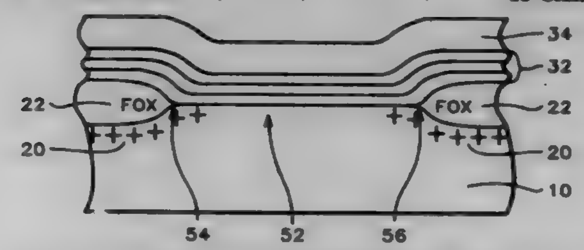

1. The method of forming an MNOS/MONOS FET device with constant threshold voltage, the method comprising:
forming a silicon oxide layer on the surface of a semiconductor substrate;
depositing a layer of silicon nitride over said silicon oxide layer and patterning said silicon nitride layer;
performing ion implantation at a tilt angle to form channel stop regions in said semiconductor substrate not covered by said patterned silicon nitride layer wherein said channel stop regions partially extend underneath said patterned silicon nitride layer;
oxidizing said semiconductor substrate not covered by said patterned silicon nitride layer to form field oxide regions within said semiconductor substrate not covered by said patterned silicon nitride layer to form field oxide regions within said semiconductor substrate wherein each of said field oxide regions has a bird's beak at the portions of said semiconductor substrate underlying edges of said patterned silicon nitride layer and wherein said channel stop regions extend under a full length of said field oxide regions and under said bird's beaks;
removing said patterned silicon nitride layer;
providing an insulating layer over a surface of said semiconductor substrate, said insulating layer including an oxide layer formed on said surface of said semiconductor substrate and a nitride layer formed on said oxide layer;
depositing a layer of polysilicon overlying said insulating layer and patterning said polysilicon layer to define a gate electrode extending over said surface of said semiconductor substrate, over said bird's beaks and over portions of said channel stop regions; and
forming source and drain regions within said semiconductor substrate to provide said MNOS/MONOS FET device with a constant threshold voltage.

5,700,729
MASKED-GATE MOS S/D IMPLANTATION
Jian-Huei Lee; Ying-Tzu Yen, and Ping-Hui Peng, all of Hsin-Chu, Taiwan, assignors to Taiwan Semiconductor Manufacturing Company, Ltd., Hsinchu, Taiwan
Filed Jul. 15, 1996, Ser. No. 679,920
Int. Cl.⁶ H01L *21/8238*
U.S. Cl. 438—230 **23 Claims**

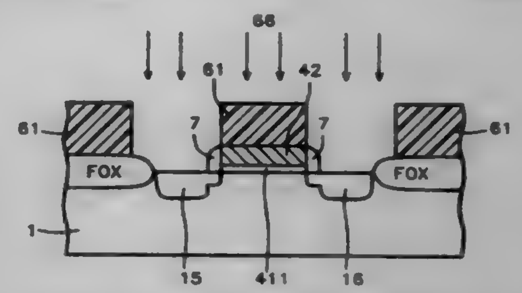

1. A process for manufacturing a field effect transistor comprising:
(a) providing a body of silicon of a first conductivity type, having an upper surface wherein are embedded field isolating regions;
(b) forming a dielectric layer on said upper surface;
(c) depositing a layer of low resistivity polysilicon on said dielectric layer;
(d) patterning and etching said polysilicon layer to form a gate structure, having vertical sides;
(e) coating the gate structure with a layer of photoresist and then patterning said layer of photoresist to form a protective cap, between 0.5 and 2 microns thick, that covers said gate structure;
(f) implanting dopant ions, of a second conductivity type opposite to said first conductivity type, in a first energy range into said upper surface thereby forming a first layer of the second conductivity type in the upper surface wherever said upper surface is not covered by the gate;

(g) forming insulating spacers on the vertical sides of said gate structure;

(h) coating the gate structure with a layer of photoresist and then patterning said layer of photoresist to form a protective cap, between 0.5 and 2 microns thick, that covers said gate structure;

(i) implanting dopant ions of the second conductivity type in a second energy range into said upper surface whereby a second layer, of the second conductivity type, deeper than said first layer of the second conductivity type, is formed in said upper surface wherever said upper surface is not covered by the gate structure and spacers; and

(j) then removing said protective cap.

5,700,730

SEMICONDUCTOR PROCESSING METHOD OF PROVIDING DOPANT IMPURITY INTO A SEMICONDUCTOR SUBSTRATE

Roger R. Lee, and Charles H. Dennison, both of Boise, Id., assignors to Micron Technology, Inc., Boise, Id.

Continuation of Ser. No. 374,346, Jan. 18, 1995, Pat. No. 5,494,851. This application Nov. 20, 1995, Ser. No. 559,651

Int. Cl.⁶ H01L *21/336*

U.S. Cl. 438—298 **9 Claims**

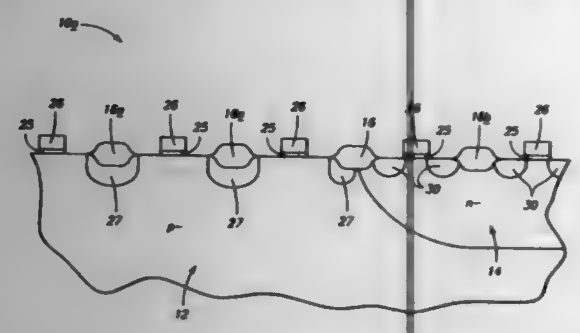

1. A semiconductor processing method of providing dopant impurity into a semiconductor substrate comprising the following steps:

providing a semiconductor substrate, the substrate comprising two bulk substrate regions, one of the bulk substrate regions being a first bulk substrate region having a blanket doping of a first type conductivity enhancing dopant, the other bulk substrate region being a second bulk substrate region having a blanket doping of a second type conductivity enhancing dopant;

defining field oxide regions in each of the first and second bulk substrate regions;

defining active area regions between the field oxide regions;

masking active area regions of the first bulk substrate region while leaving field oxide regions of the first bulk substrate region unmasked, and masking field oxide regions of the second bulk substrate region while leaving at least some active area regions of the second bulk substrate region unmasked;

doping through the unmasked portions of the two bulk substrate regions; and

after the doping, providing gates over the active area regions of the first and second bulk substrate regions.

5,700,731

METHOD FOR MANUFACTURING CROWN-SHAPED STORAGE CAPACITORS ON DYNAMIC RANDOM ACCESS MEMORY CELLS

John C. H. Lin, Hsin-chu; Daniel Hao-Tien Lee, and Meng-Jaw Cherng, both of Hsinchu, all of Taiwan, assignors to Vanguard International Semiconductor Corporation, Hsin-Chu, Taiwan

Filed Dec. 7, 1995, Ser. No. 568,722

Int. Cl.⁶ H01L *21/20*

U.S. Cl. 438—381 **18 Claims**

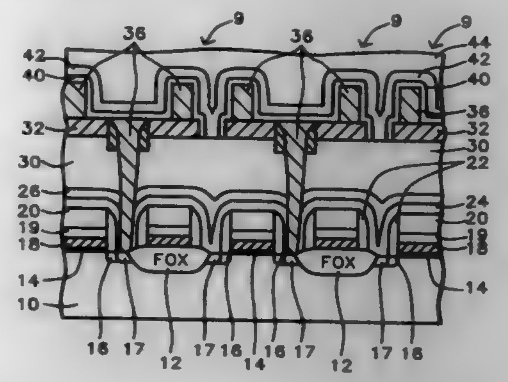

1. A method for fabricating an array of crown-shaped capacitors on a semiconductor substrate in device areas, comprising the steps of:

providing a semiconductor substrate having field oxide areas surrounding and electrically isolating an array of device areas, each of said device areas having a single field effect transistor (FET) consisting of a gate electrode and having a first and second source/drain areas adjacent to and on each side of said gate electrode, and forming bit line contacts and interconnecting electrically conducting bit lines to said first source/drain areas, and further forming the crown-shape node capacitors by;

depositing a low flow temperature insulator on said field effect transistors and elsewhere on said substrate,

annealing said low flow temperature insulator and forming an essentially planar surface on said low flow temperature insulator,

forming contact openings in said low flow temperature insulator to said second source/drain area of each of said field effect transistors,

depositing a conformal bottom electrode polysilicon layer in said node contact openings and elsewhere on said substrate, and thereby filling said contact openings and making electrical contact to said second source/drain areas, and forming an essentially planar bottom electrode polysilicon layer on said substrate;

spin coating a positive photoresist layer on said planar bottom electrode polysilicon layer;

optically exposing said positive photoresist layer using a phase-shift edge mask having an array of 180 degree phase shifting material regions aligned over the planned capacitor areas, developing said photoresist, and thereby forming a crown-shaped patterned photoresist mask on said capacitor areas; and

replicating said pattern photoresist mask in said bottom electrode polysilicon layer by anisotropic etching;

removing said patterned photoresist layer, and thereby forming an array of crown-shaped bottom electrodes for said array of crown-shaped stacked capacitors;

forming an interelectrode dielectric layer on surfaces of said crown-shaped bottom electrodes,

depositing a top electrode polysilicon layer on said dielectric layer and elsewhere on said substrate;

patterning said top electrode polysilicon layer and thereby forming the top electrodes of said storage capacitors and completing said array of crown-shaped stacked capacitors.

5,700,732

SEMICONDUCTOR WAFER, WAFER ALIGNMENT PATTERNS AND METHOD OF FORMING WAFER ALIGNMENT PATTERNS

Mark E. Jost; David J. Hansen, both of Boise, and Steven M. McDonald, Meridian, all of Id., assignors to Micron Technology, Inc., Boise, Id.

Filed Aug. 2, 1996, Ser. No. 691,855

Int. Cl.⁶ H01L *21/302*

U.S. Cl. 438—401 **9 Claims**

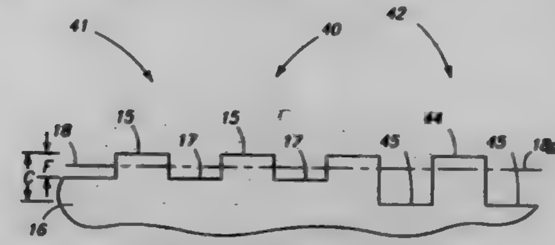

1. A semiconductor processing method of forming integrated circuitry on a semiconductor wafer comprising;

forming at least two discrete wafer alignment patterns on the wafer, the two discrete alignment patterns having respective series of elevation steps provided therein; and

while fabricating integrated circuitry elsewhere on the wafer, processing a first portion of at least one of the alignment patterns differently from a second portion of the one alignment pattern to render the first portion to be different from the second portion in the one alignment pattern.

5,700,733

SEMICONDUCTOR PROCESSING METHODS OF FORMING FIELD OXIDE REGIONS ON A SEMICONDUCTOR SUBSTRATE

Monte Manning, Boise, Id., assignor to Micron Technology, Inc., Boise, Id.

Filed Jun. 27, 1995, Ser. No. 495,339

Int. Cl.⁶ H01L *21/76*

U.S. Cl. 438—439 **9 Claims**

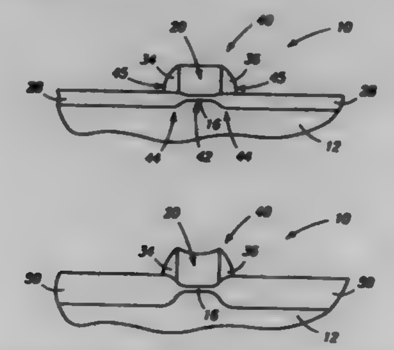

1. A semiconductor processing method of forming field oxide regions on a semiconductor substrate, the method comprising the following steps:

forming a pad oxide layer over a semiconductor substrate to a first thickness;

forming a patterned mask of a masking material over the pad oxide layer, the patterned mask having opposed sidewall edges;

forming unmasked oxide relative to the substrate externally proximate the mask sidewall edges, the unmasked oxide being provided to a second thickness which is greater than the first thickness, the forming of the unmasked oxide comprising depositing a layer of oxide over the semiconductor substrate;

forming sidewall spacers laterally over the patterned mask sidewall edges and elevationally over the unmasked oxide layer, the sidewall spacers comprising the masking material; and

oxidizing portions of the substrate unmasked by the patterned mask and sidewall spacers to form field oxide regions on the substrate.

5,700,734

PROCESS OF FABRICATING FIELD EFFECT TRANSISTOR HAVING RELIABLE POLYCIDE GATE ELECTRODE

Mitsuma Ooishi, Tokyo, Japan, assignor to NEC Corporation, Japan

Filed Jun. 24, 1996, Ser. No. 670,766

Claims priority, application Japan, Jun. 26, 1995, 7-159463

Int. Cl.⁶ H01L *21/3205*

U.S. Cl. 438—592 **10 Claims**

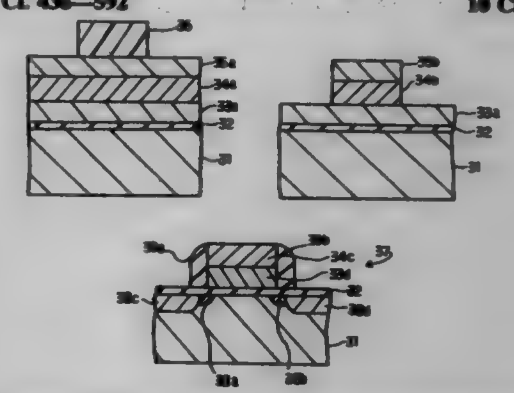

1. A process of fabricating a field effect transistor on a semiconductor layer, comprising the steps of:

a) forming a laminated structure on said semiconductor layer, said laminated structure including a gate insulating layer, a silicon layer and an amorphous refractory metal silicide layer;

b) patterning a laminated sub-structure including said amorphous refractory metal silicide layer into a primitive gate sub-structure including an amorphous refractory metal silicide strip patterned from said amorphous refractory metal silicide layer;

c) crystallizing said amorphous refractory metal silicide strip so as to provide a gate sub-structure including a crystal refractory metal silicide strip on said silicon layer; and

d) patterning said silicon layer into a silicon strip on said gate insulating layer, said crystal refractory metal silicide strip and said silicon strip forming a gate structure.

5,700,735

METHOD OF FORMING BOND PAD STRUCTURE FOR THE VIA PLUG PROCESS

Ruey-Yun Shiue; Wen-Teng Wu, both of Hsin-Chu; Pi-Chen Shieh, Hsinchu, and Chin-Kai Liu, Hsin-Chu, all of Taiwan, assignors to Taiwan Semiconductor Manufacturing Company, Ltd., Hsin-Chu, Taiwan

Filed Aug. 22, 1996, Ser. No. 703,918

Int. Cl.⁶ H01L *21/60*

U.S. Cl. 438—612 **9 Claims**

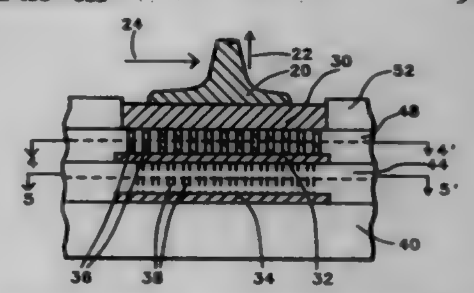

1. A method of forming a bond pad, comprising the steps of:
forming a first dielectric layer;

forming a square first metal pad on said first dielectric layer;
forming a second dielectric layer over said first metal pad;
forming a first number of holes in said second dielectric layer;
filling said first number of holes with a fourth metal thereby forming a first number of first via plugs wherein said first via plugs contact said first metal pad and said first number of holes are located such that said first number of first via plugs lie within a first square rotated 45° with respect to said first metal pad;
forming a square second metal pad over said second dielectric layer and said first via plugs wherein said second metal pad is directly above said first metal pad and has the same orientation as said first metal pad, and said second metal pad contacts said first via plugs;
forming a third dielectric layer over said second metal pad;
forming a second number of holes in said third dielectric layer;
filling said second number of holes with a fifth metal thereby forming a second number of second via plugs wherein said second via plugs contact said second metal pad;
forming a square third metal pad over said third dielectric layer and said second via plugs wherein said third metal pad is directly above said second metal pad, said third metal pad has the same orientation as said second metal pad, said third metal pad contacts said second via plugs, and said second number of holes are located such that said second number of second via plugs lie within a second square rotated 45° with respect to said third metal pad;
forming a fourth dielectric layer over said third metal pad; and
forming an opening in said fourth dielectric layer directly above said third metal pad thereby exposing said third metal pad.

5,700,736

METHOD FOR MAKING SEMICONDUCTOR DEVICE

Masakazu Muroyama, Kanagawa, Japan, assignor to Sony Corporation, Tokyo, Japan

Filed Dec. 11, 1995, Ser. No. 570,653

Claims priority, application Japan, Dec. 13, 1994, 6-332603

Int. Cl.[6] H01L *21/471*

U.S. Cl. 438—622 **6 Claims**

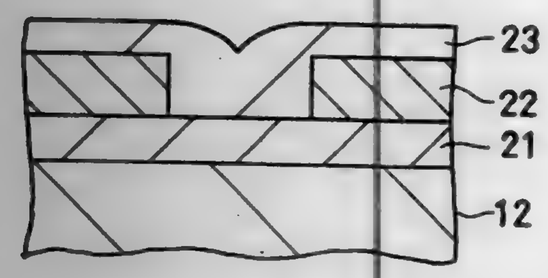

1. A method for making a semiconductor device, comprising the steps of:
forming a first wiring layer on a substrate;
forming an insulator layer comprising SiOF by adsorption of a raw material gas comprising an organic Si compound on said first wiring layer;
removing, after said adsorption step, unreacted material from said insulator layer by plasma treatment;
repeating more than once by turns said steps of adsorption and plasma treatment until formation of said insulator layer is substantially complete; and
thereafter, forming a second wiring layer on said insulator layer, wherein said organic Si compound includes Si-F bonds.

5,700,737

PECVD SILICON NITRIDE FOR ETCH STOP MASK AND OZONE TEOS PATTERN SENSITIVITY ELIMINATION

Chen-Hua Yu, Keelung, and Syun-Ming Jang, Hsin-chu, both of Taiwan, assignors to Taiwan Semiconductor Manufactured Company Ltd., Hsin-chu, Taiwan

Filed Feb. 26, 1996, Ser. No. 606,955

Int. Cl.[6] H01L *21/465*

U.S. Cl. 438—636 **19 Claims**

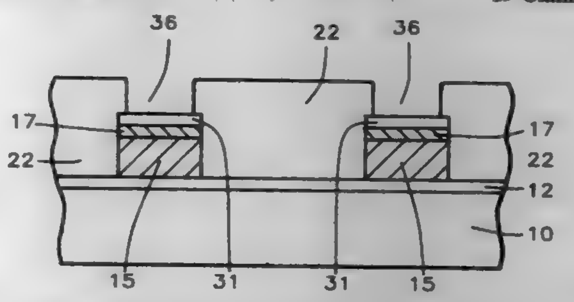

1. A method of forming electrode patterns, comprising the steps of:
providing an integrated circuit element having devices formed therein;
providing a base dielectric layer formed on said integrated circuit element;
forming a conductor metal layer on said base dielectric layer;
forming an antireflection material layer on said conductor metal layer, wherein said antireflection material is titanium nitride;
forming a silicon nitride etch stop layer on said antireflection material layer;
forming a photoresist layer on said silicon nitride etch stop layer;
forming an electrode pattern in said photoresist using photolithographic techniques;
forming said electrode pattern in said silicon nitride etch stop layer by means of anisotropic dry etching using said electrode pattern formed in said photoresist as a mask and a first etchant;
forming said electrode pattern in said antireflection material by means of anisotropic dry etching using said electrode pattern formed in said photoresist and said electrode pattern formed in said silicon nitride etch stop layer as a mask and BCl_3+Cl_2 as an etchant;
forming said electrode pattern in said conductor metal by means of anisotropic dry etching using said electrode pattern formed in said photoresist and said electrode pattern formed in said silicon nitride etch stop layer as a mask and a third etchant;
removing said electrode pattern formed in said photoresist; and
forming an inter-metal dielectric layer over said integrated circuit element covering said electrode pattern formed in said silicon nitride, said electrode pattern formed in said antireflection material, said electrode pattern formed in said conductor metal, and said base dielectric layer.

5,700,738

METHOD FOR PRODUCING A SEMICONDUCTOR DEVICE

Masanobu Zenke, Tokyo, Japan, assignor to NEC Corporation, Tokyo, Japan

Filed Apr. 1, 1996, Ser. No. 625,825

Claims priority, application Japan, Mar. 31, 1995, 7-075120

Int. Cl.[6] H01L *21/285*

U.S. Cl. 438—653 **3 Claims**

1. A method of producing a semiconductor device, comprising the steps of:
forming an adhesion layer on a front of a silicon substrate via an oxide film;
forming, after forming said adhesion layer, a silicon oxide film on sides and a rear of said silicon substrate by using an oxidizing gas; and

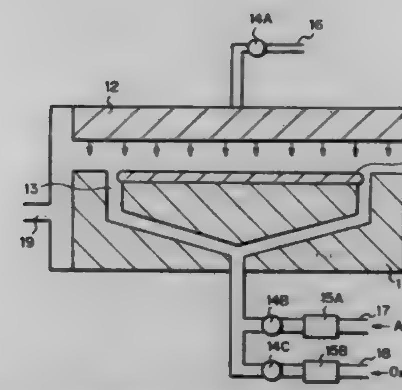

forming a metal film on said adhesion layer by a CVD process while feeding an inactive gas to said sides of said silicon substrate.

5,700,739

METHOD OF MULTI-STEP REACTIVE ION ETCH FOR PATTERNING ADJOINING SEMICONDUCTOR METALLIZATION LAYERS

An-Min Chiang, Hsin-chu, and Wei-Kun Yeh, Hsinchu, both of Taiwan, assignors to Taiwan Semiconductor Manufacturing Company Ltd, Hsin-Chu, Taiwan

Filed Aug. 3, 1995, Ser. No. 510,826

Int. Cl.[6] H01L *21/44*

U.S. Cl. 438—655 **16 Claims**

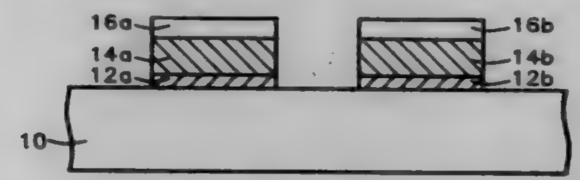

1. A method for forming a patterned conductor metallization layer adjoining a patterned barrier metallization layer over a semiconductor substrate comprising:
providing a semiconductor substrate:
forming over the semiconductor substrate a blanket conductor metallization layer adjoining a blanket barrier metallization layer, the blanket barrier metallization layer being formed from a barrier material selected from the group of barrier materials consisting of metal silicide barrier materials and metal nitride barrier materials, where one of the blanket conductor metallization layer and the blanket barrier metallization layer is an upper metallization layer formed further removed from the semiconductor substrate and the other of the blanket conductor metallization and the blanket barrier metallization layer is a lower metallization layer formed closer to the semiconductor substrate;
forming a blanket first masking layer upon the surface of the upper metallization layer, the blanket first masking layer being formed from a material selected from the group of materials consisting of silicon oxide materials, silicon nitride materials and silicon oxynitride materials;
forming a patterned second masking layer upon the surface of the blanket first masking layer;
etching sequentially through a first etch method portions of the blanket first masking layer and the upper metallization layer sequentially exposed through the patterned second masking layer to yield a patterned first masking layer and a patterned upper metallization layer; and
etching through a second etch method portions of the lower metallization layer exposed through the pattern of the patterned first masking layer and the patterned upper metallization layer to form a patterned lower metallization layer, where the patterned second masking layer is removed after the first etch method and before the second etch method.

5,700,740

PREVENTION OF CORROSION OF ALUMINUM INTERCONNECTS BY REMOVING CORROSION-INDUCING SPECIES

Chien-Feng Chen, Taichung, and Huan Wen Wang, Chung-li, both of Taiwan, assignors to Taiwan Semiconductor Manufacturing Company Ltd, Hsin-Chu, Taiwan

Filed Mar. 25, 1996, Ser. No. 620,731

Int. Cl.[6] H01L *21/00*

U.S. Cl. 438—710 **23 Claims**

1. A method of preventing corrosion of metal interconnection lines in an integrated circuit structure comprising:
depositing an aluminum-copper alloy layer over a dielectric layer having a pattern of contact holes with a semiconductor substrate,
coating a photoresist layer over the aluminum-copper layer exposing the photoresist through appropriate mask having desired pattern of metal lines, developing the photoresist to open up the negative image of the interconnection pattern,
reactively etching the aluminum-copper alloy film through the photoresist openings in a plasma containing ions of chlorine and compounds of chlorides,
dipping the semiconductor substrate wafer in a solution immediately after the reactive ion etching, and rinsing the wafer with deionized water, and
stripping the photoresist either by using a solvent, or by ashing in an oxygen-containing plasma, rinsing with deionized water, rinsing with a solvent, and rinsing with deionized water again.

5,700,741

PLASMA PURGE METHOD FOR PLASMA PROCESS PARTICLE CONTROL

Chin-Cherng Liao, Hsinchu, Taiwan, assignor to Vanguard International Semiconductor Corporation, Hsin-Chu, Taiwan

Filed May 20, 1996, Ser. No. 650,396

Int. Cl.[6] H01L *21/00*

U.S. Cl. 438—723 **26 Claims**

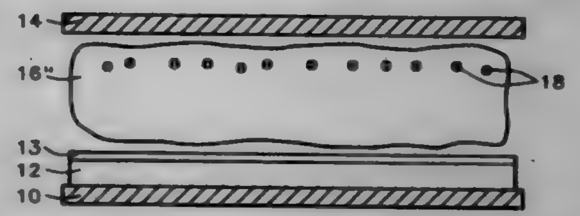

1. A method for limiting contaminant particle deposition upon integrated circuit layers within plasma assisted process reactor chambers comprising:
undertaking a plasma assisted process upon an integrated circuit layer within a plasma assisted process reactor chamber, the plasma assisted process employing a reactant gas composition, a first radio frequency power and a first reactor chamber pressure appropriate to the plasma assisted process and the integrated circuit layer;
undertaking a first plasma purge step for a first purge time immediately following the plasma assisted process, the first plasma purge step employing a first purge gas composition, a second radio frequency power and a second reactor chamber pressure, the second radio frequency power being lower than

the first radio frequency power and the second reactor chamber pressure being higher than the first reactor chamber pressure.

5,700,742
ANTIMICROBIAL TREATMENT OF TEXTILE MATERIALS

John David Payne, Rossendale, United Kingdom, assignor to Zeneca Limited, London, United Kingdom
PCT No. PCT/GB94/02194, § 371 Date Apr. 18, 1996, § 102(e) Date Apr. 18, 1996, PCT Pub. No. WO95/12021, PCT Pub. Date May 4, 1995
PCT Filed Oct. 7, 1994, Ser. No. 632,449
Claims priority, application United Kingdom, Oct. 27, 1993, 9322132
Int. Cl.[6] D04H *1/58*
U.S. Cl. 442—123 **12 Claims**

1. A method of treating a textile material to inhibit microbial growth which comprises applying to the textile material a) an oligo- or polymeric biguanide or salt thereof with an inorganic acid or an organic acid having a pK value above 4.5 followed by b) a strong organic acid having a pK value below 4.5 and free from any aliphatic or oxyalkylene chain containing 12 or more carbon atoms.

5,700,743
CARBON FIBER-REINFORCED COMPOSITE MATERIAL WITH A LAYER WHICH PROVIDES PROTECTION AGAINST EROSION

Franz Puchinger, Pfaffenhofen; Axel Rossmann, Karlsfeld; Siegfried Sikorski, München, and Gerhard Wydra, Oberschleissheim, all of Germany, assignors to MTU Motoren-Und Turbinen-Union München GmbH, München, Germany
Continuation of Ser. No. 361,591, Dec. 22, 1994, abandoned. This application Mar. 10, 1997, Ser. No. 814,446
Claims priority, application Germany, Dec. 22, 1993, 4343904.7
Int. Cl.[6] B32B *5/16*
U.S. Cl. 442—243 **18 Claims**

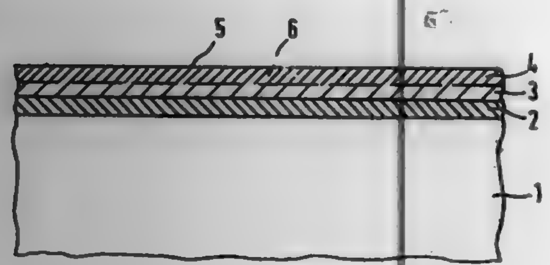

1. A structural component comprising a base made of a carbon fiber-reinforced composite material and a protective coating on said base for protecting said base against erosion, said protective coating comprising an adhesion-promoting intermediate layer on a surface of the base, an electrically insulating, baked, inorganic lacquer layer on said adhesion-promoting layer for protection against erosion and an electrically conducting covering layer, for protection against lightning strikes, on said inorganic lacquer layer, said covering layer comprising a baked and compressed inorganic lacquer, the lacquer of said lacquer layer and of said covering layer being baked at a temperature below a temperature which causes damage to the base or softening of the base or decomposition of the base, said adhesion-promoting, intermediate layer consisting essentially of a plastic matrix material containing glass fibers.

5,700,744
SEALING GLASS COMPOSITION

Tae Ho Park, Seoul; Chun Suk Kim, Suwon, and Sung Hun Moon, Seoul, all of Rep. of Korea, assignors to Samsung Corning Co., Ltd., Kyeonggi-Do, Rep. of Korea
Filed Apr. 1, 1996, Ser. No. 625,362
Claims priority, application Rep. of Korea, Mar. 31, 1995, 95-7217
Int. Cl.[6] C03C *8/20;3/066*
U.S. Cl. 501—15 **2 Claims**

1. A sealing glass composition for sealing between the glass panel and funnel of a color TV glass picture tube, at 420° C. within 20 minutes comprising:
(a) 93–99.8 weight percent $PbO—B_2O_3—ZnO$ devitrifiable glass powder made of:
74–82 weight percent PbO,
7–10 weight percent B_2O_3,
8–12 weight percent ZnO,
1–4 weight percent SiO_2,
0.05–0.5 weight percent MgO,
0.1–0.5 weight percent BaO, and
0.1–0.5 weight percent F;
(b) 0.1–4.0 weight percent synthetic zircon having a specific surface area of 1.0–2.0m^2/g, as a nucleating agent; and
(c) 0.1–3.0 weight percent cordierite, as a filler.

5,700,745
DIELECTRIC CERAMIC COMPOSITIONS AND DIELECTRIC RESONATORS

Kojiro Okuyama, Nara; Koji Shimoyama, Hyogo; Syunichiro Kawashima, Kyoto, and Koichi Kugimiya, Osaka, all of Japan, assignors to Matsushita Electric Industrial Co. Ltd., Osaka, Japan
Filed Nov. 17, 1995, Ser. No. 559,135
Claims priority, application Japan, Nov. 22, 1994, 6-288286; Nov. 13, 1995, 7-294613
Int. Cl.[6] C04B *35/49;35/462;35/465*
U.S. Cl. 501—134 **9 Claims**

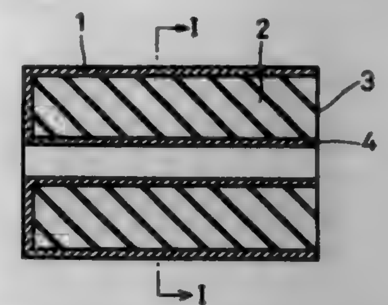

1. A dielectric ceramic comprising as a main component a complex oxide formed of both Zr and Ti, at least one component selected from the group (A) consisting of Mg, Co, Zn, Ni and Mn and at least one component selected from the group (B) consisting of Nb and Ta, and as accessory components at least one component selected from the group (C) consisting of Ba, Sr, Ca, Bi and W, wherein the main component of the dielectric ceramic is expressed by the Formula: $xZrO_2—zA_{(1+u)/3}B_{(2-u)/3}O_2$, wherein A denotes at least one component from the group (A) consisting of Mg, Co, Zn, Ni and Mn, B denotes at least one component selected from the group (B) consisting of Nb and Ta, wherein x, y and z denote molar fractions and u denotes a value defined as follows:

$$x+y+z=1$$

$$0.10 \leqq x \leqq 0.60$$

$$0.20 \leqq y \leqq 0.60$$

$$0.01 \leqq z \leqq 0.70$$

$$0 \leqq u \leqq 1.90$$

and wherein the accessory components of the dielectric ceramic are present within the range of 0.005 to 7.000% by weight based on the entire weight of the ceramic.

5,700,746
REVERSIBLE THERMOSENSITIVE RECORDING MEDIUM

Atsushi Kutami; Eiichi Kawamura, both of Numazu, and Keishi Kubo, Yokohama, all of Japan, assignors to Ricoh Company, Ltd., Tokyo, Japan
Filed Mar. 5, 1996, Ser. No. 611,182
Claims priority, application Japan, Mar. 6, 1995, 7-02272; May 15, 1995, 7-139914
Int. Cl.[6] B41M *5/26;5/40*
U.S. Cl. 501—201 **13 Claims**

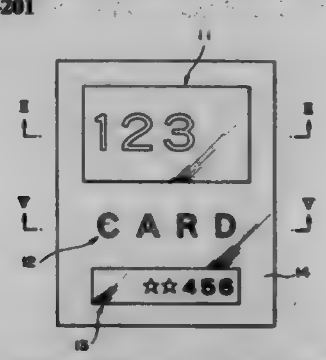

1. A reversible thermosensitive recording medium, comprising an opaque support and a transparent recording film provided over a surface of said opaque support and including at least one transparent layer, one of said at least one transparent layer being a thermosensitive layer capable of reversibly assuming a maximum transparent state and a maximum opaque state depending upon the thermal hysteresis thereof, wherein said transparent recording film has an image display section in which a void space is provided between said transparent recording film and said opaque support, wherein one of said at least one transparent layer in said display section contains a colorant having a first color and a maximum absorption wavelength providing a maximum absorbance, wherein said opaque support in the area corresponding to said display section has a second color discriminative from said first color, wherein the reflectance, in terms of %, of said display section for light with said maximum absorption wavelength is R_x when said thermosensitive layer assumes said maximum transparent state but is R_y when said thermosensitive layer assumes said maximum opaque state, said reflectance R_x being greater by at least 5% than said reflectance R_y, and wherein the transmittance of said display section of said transparent recording film for light with said maximum absorption wavelength is 20 to 80%, when said thermosensitive layer assumes said maximum transparent state, and
wherein said thermosensitive layer comprises a matrix resin and an organic low molecular weight material dispersed in said matrix resin.

5,700,747
EXHAUST GAS CLEANING CATALYST COMPLEX AND METHOD FOR PRODUCING THE SAME

Makoto Kyogoku, Hiroshima; Hideharu Iwakuni, Higashihiroshima, and Akihide Takami, Hiroshima, all of Japan, assignors to Mazda Motor Corporation, Hiroshima-ken, Japan
Filed Sep. 25, 1995, Ser. No. 533,819
Claims priority, application Japan, Sep. 26, 1994, P 6-229122
Int. Cl.[6] B01J *29/06*
U.S. Cl. 502—66 **18 Claims**

1. An exhaust gas cleaning catalyst complex for decomposing NO_x in an exhaust gas under the presence of HC, said complex comprising:
a first layer on a carrier and a second component carried on said first layer wherein the first layer is a noble metal catalyst layer comprising a noble metal catalyst supported on a crystalline

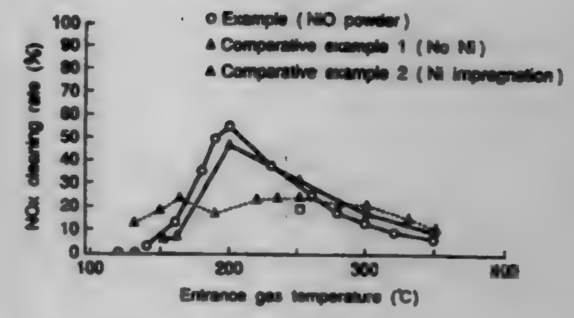

metal-bearing silicate and wherein the second component is nickel in the form of nickel oxide.

5,700,748
CATALYST FOR THE PRODUCTION OF OLEFIN POLYMERS COMPRISING A BRIDGING ALLYL-CYCLODIENYL LIGAND ON A METAL ATOM

Rex Eugene Murray, Cross Lanes, W. Va., assignor to Union Carbide Chemicals & Plastics Technology Corporation, Danbury, Conn.
Filed Sep. 29, 1995, Ser. No. 536,947
Int. Cl.[6] B01J *31/00;37/00;* **C08F** *4/02;4/60*
U.S. Cl. 502—102 **5 Claims**

1. A catalyst composition comprising the reaction product of:
1) a catalyst precursor of the formula:

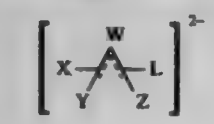

wherein:
L is a cycloalkadienyl ligand;
W, X, Y, and Z are independently hydrogen, a hydrocarbyl group containing 1 to 20 carbon atoms, or a silyl group, and may be connected to L through a bridging group comprising at least two Group IVA atoms; with the proviso that one of X, Y, and Z is a negative charge stabilizing group selected from the group consisting of Group IVA trialkyl groups, aryl groups, heteroaromatic groups, ethylenically unsaturated hydrocarbon groups, acetylenically unsaturated hydrocarbon groups, ketonic groups, and aromatic organometallic moieties;
2) a compound comprising a metal selected from the group consisting of Group IIIB to VIII elements and the Lanthanide series elements; and
3) an activating cocatalyst.

5,700,749
PROCESS FOR POLYMERIZING OLEFINS

Toshiyuki Tsutsui, Ohtake; Akinori Toyota, and Norio Kashiwa, both of Iwakuni, all of Japan, assignors to Mitsui Petrochemical Industries, Ltd., Tokyo, Japan
Continuation of Ser. No. 267,299, Jun. 29, 1994, abandoned, which is a continuation of Ser. No. 22,200, Feb. 25, 1993, abandoned, which is a division of Ser. No. 854,758, Mar. 20, 1992, abandoned, which is a continuation of Ser. No. 554,163, Jul. 19, 1990, abandoned, which is a continuation of Ser. No. 205,325, May 20, 1988, abandoned. This application Mar. 1, 1995, Ser. No. 396,893
Claims priority, application Japan, Sep. 24, 1986, 61-223781; Oct. 1, 1986, 61-231242; Oct. 1, 1986, 61-231243; Dec. 11, 1986, 61-293446
Int. Cl.[6] C08F *4/642;10/00*
U.S. Cl. 502—117 **28 Claims**

1. A catalyst composition for copolymerizing ethylene and alpha-olefin having 3 to 20 carbon atoms, said catalyst composition comprising:

(A) a catalyst component containing as the transition metal compound a zirconium metallocene represented by the following formula (I)

$R^{11}R^{12}R^{13}R^{14}Zr$

wherein R^{11} represents a cycloalkadienyl group, R^{12} is selected from the group consisting of —OR^a, —SR^b and —NR^c, R^{13} represents a cycloalkyladienyl group, an aryl group, an aralkyl group, a halogen atom, or a hydrogen atom, R^{14} represents an aryl group, an aralkyl group, a halogen atom or a hydrogen atom, each of R^a, R^b and R^c represents an alkyl group, a cycloalkyl group, an aryl group, an aralkyl group or an organic silyl group; and when —OR^a is alkyloxy, said transition metal compound is pre-treated with dialkylaluminum halide or trialkylaluminum compound;

(B) an aluminoxane of formula (II)-1, formula (III)-1 or mixture thereof

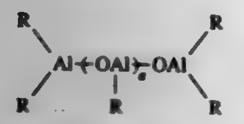

(II)-1

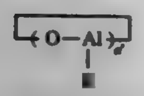

(III-1)

wherein R is a hydrocarbon group, a is a number of from 2 to 50, and a' is a number from 4 to 52; and

(C) an organoaluminum compound having a branched alkyl group; wherein catalyst component (A), aluminoxane (B) and organoaluminum compound (C) are combined and the amount of zirconium metallocene is from 10^{-8} to 10^{-2} gram-atom/liter, as zirconium atom, in a polymerization system; and the amount of aluminoxane (B) is more than 0 but not more than 3 milligram-atom/liter, as aluminum atom, in the polymerization system.

5,700,750

PROCESS FOR POLYMERIZATION OF ALPHA-OLEFINS

Toshiyuki Tsutsui, Ohtake; Akinori Toyota, and Norio Kashiwa, both of Iwakuni, all of Japan, assignors to Mitsui Petrochemical Industries, Ltd., Tokyo, Japan

Continuation of Ser. No. 268,116, Jul. 6, 1994, abandoned, which is a continuation of Ser. No. 140,994, Oct. 25, 1993, abandoned, which is a continuation of Ser. No. 512,508, Apr. 20, 1990, abandoned, which is a continuation of Ser. No. 356,706, May 24, 1989, abandoned, which is a continuation of Ser. No. 103,583, Aug. 14, 1987, abandoned. This application May 24, 1995, Ser. No. 449,284

Claims priority, application Japan, Dec. 26, 1985, 60-291893

Int. Cl.⁶ C08F *4/648;4/656;4/655;10/00*

U.S. Cl. 502—117 **1 Claim**

1. A catalyst for use in polymerizing an alpha-olefin, which is formed from

(A) a transition metal compound represented as an average composition by the following formula (I)

$$R^1_kR^2_lR^3_mR^4_nM \quad (I)$$

wherein

M represents a zirconium or hafnium atom,

R^1 represents a cycloalkadienyl group,

R^2 is an —OR^a group or an —SR^b group,

R^3 and R^4 are identical or different and each represents a cycloalkadienyl group, an alkyl group or a halogen atom,

R^a and R^b each represent a hydrocarbon selected from the group consisting of an alkyl group, a cycloalkyl group, an aryl group and an aralkyl group,

$1 \leqq k \leqq 3$,

$1 \leqq l \leqq 2$,

$0 \leqq m \leqq 2$,

$0 \leqq n \leqq 2$,

and

$k+l+m+n=4$;

and

(B) an aluminoxane;

wherein said transition metal compound (A) is treated with (D) a silicon tetrahalide before it is contacted with said aluminoxane, said treatment being effected in an organic solvent at a temperature of 0° to 100° C. for 1 to 200 minutes, said silicon tetrahalide (D) having a concentration, in said organic solvent, of 1×10^{-8} to 1 gram-atom/liter, as the metallic atom.

5,700,751

CATALYST FOR TREATMENT OF WASTE PLASTICS AND METHOD OF MANUFACTURING THE SAME

Yali Yang, Beijing, China, assignor to Plastic Advanced Recycling Corp., Burr Ridge, Ill.

Filed Feb. 27, 1996, Ser. No. 607,869

Claims priority, application China, Nov. 23, 1995, 95117514.9

Int. Cl.⁶ B01J *21/04*

U.S. Cl. 502—255 **11 Claims**

1. A catalyst used for treating waste plastics, comprising a carrier and active components having the following formula:

$$A_aB_bAl_cM_dNa_eCa_fFe_gO_x$$

wherein A is selected from the group consisting of potassium, barium, phosphorus, vanadium, chromium, rare earth elements and their mixture, B selected from the group consisting of molybdenum, tungsten, nickel, germanium and platinum series, and M selected from WO or $(NH_4)_2WO_4$, wherein a is from 25 to 26.35 percent by weight; b from 36 to 37.05 percent; c from 7.2 to 9 percent; d from 1.14 to 1.55 percent; e from 1.75 to 2.15 percent; f from 2.40 to 2.80 percent; and g from 2.42 to 3.2 percent; and x is a sum of oxygen needed for chemical bonding valences of said components in the catalyst.

3. A method for preparing a catalyst for treating waste plastics, comprising the steps of:

(a) pulverizing a tail ore together with a mixture of Al_2O_3, MoS_2, $NaNO_3$, and Fe_3O_4 at a weight ratio of less than 1:0.1 into a fine powder;

(b) mixing the powder with a silica gel to obtain a slurry with added water;

(c) forming pellets from said slurry;

(d) thermally treating the pellets at a temperature of about 300° C. to 400° C. for about 20 to 30 min.; and

(e) roasting the thermally treated pellets at a temperature of about 400° C. to 800° C. for about 4–5 hours.

7. A method for preparing a catalyst for treating waste plastics, comprising the steps of:

(a) blending active components with a quasi thin alumina powder at a weight ratio of less than 1:0.1, wherein said active components having the following formula:

$$A_aB_bAl_cM_dNa_eCa_fFe_gO_x$$

wherein A is selected from the group consisting of potassium, barium, phosphorus, vanadium, chromium, rare earth elements and their mixture, B selected from the group consisting of molybdenum, tungsten, nickel, germanium and platinum series, and M selected from WO or $(NH_4)_2WO_4$, wherein a is from 25 to 26.35 percent by weight; b from 36 to 37.05 percent; c from 7.2 to 9 percent; d from 1.14 to 1.55 percent; e from 1.75 to 2.15 percent; f from 2.40 to 2.80 percent; and g from 2.42 to 3.2 percent; and x is a sum of oxygen needed for chemical bonding valences of said components in the catalyst,

(b) mixing the blended mixture with a silica gel to obtain a slurry with added water;

(c) forming pellets from said slurry;

(d) thermally treating the pellets at a temperature of about 300° C. to 400° C. for about 20 to 30 min.; and

(e) roasting the thermally treated pellets at a temperature of about 400° C. to 800° C. for about 4–5 hours.

5,700,752

CATALYST FOR PRODUCTION OF UNSATURATED ALDEHYDE AND UNSATURATED CARBOXYLIC ACID AND METHOD FOR PRODUCTION OF UNSATURATED ALDEHYDE AND UNSATURATED CARBOXYLIC ACID BY THE USE OF THE CATALYST

Ikuo Kurimoto; Tatsuya Kawajiri; Hideo Onodera; Michio Tanimoto, and Yukio Aoki, all of Hyogo, Japan, assignors to Nippon Shokubai Co. Ltd., Osaka-fu, Japan

Filed May 31, 1995, Ser. No. 456,062

Claims priority, application Japan, May 31, 1994, 6-118229

Int. Cl.⁶ B01J *23/25;23/30;23/31*

U.S. Cl. 502—311 **10 Claims**

1. A catalyst for producing unsaturated aldehyde and unsaturated carboxylic acid by the oxidation of at least one compound selected from the group consisting of propylene, isobutylene, t-butanol and methyl-t-butyl ether in a vapor phase with molecular oxygen or a molecular oxygen-containing gas, comprising (A) a composite oxide represented by the following general formula (1):

$$Mo_aW_bBi_cFe_dA_eB_fC_gD_hE_iO_x \quad (1)$$

wherein Mo is molybdenum, W is tungsten, Bi is bismuth, Fe is iron, A is at least one element selected from the group consisting of nickel and cobalt, B is at least one element selected from the group consisting of alkali metals and thallium, C is at least one alkaline earth metal, D is at least one element selected from the group consisting of phosphorus, tellurium, antimony, tin, cerium, lead, niobium, manganese, arsenic and zinc, E is at least one element selected from the group consisting of silicon, aluminum, titanium end zirconium, and O is oxygen, and a, b, c, d, e, f, g, h, i, and x are atomic ratios respectively of Mo, W, Bi, Fe, A, B, C, D, E, and O such that b is a numeral in the range of 0.5 to 10, c in the range of 0.1 to 10, d in the range of 0.1 to 20, e in the range of 2 to 20, f in the range of 0 to 4 in the range of 0 to 30, and x is a numeral to be determined by the oxidized states of the elements when a is fixed at 12 and (B) a solid acid having acid strength (Ho) of not more than −11.93 (Ho ≦−11.93) wherein the ratio of said component (B) to said component (A) (as oxide) is in the range of 0.5 to 30% by weight.

5,700,753

HETEROGENEOUS BIMETALLIC PALLADIUM-GOLD CATALYST FOR VINYL ACETATE PRODUCTION

Tao Wang, and Jerry A. Broussard, both of Corpus Christi, Tex., assignors to Hoechst Celanese Corporation, Somerville, N.J.

Filed May 24, 1996, Ser. No. 655,571

Int. Cl.⁶ B01J *23/44;23/52*

U.S. Cl. 502—330 **19 Claims**

1. A process for the preparation of a catalyst for production of vinyl acetate from ethylene, acetic acid and oxygen, which process comprises (1) forming a precursor catalyst by impregnation of a porous catalyst support medium with a solution of palladium compound, and reduction of the palladium compound to a first shell dispersion coating of colloidal palladium metal on the catalyst support surface; and (2) impregnating the precursor catalyst with an organic solvent solution of organometallic gold compound, and reducing the gold compound to a second shell dispersion coating of colloidal gold metal on the catalyst support surface to form a bimetallic palladium-gold catalyst which provides improved carbon dioxide selectivity and oxygen conversion in vinyl acetate production from ethylene, acetic acid and oxygen.

15. A heterogeneous bimetallic palladium-gold catalyst composition for the preparation of vinyl acetate from ethylene, acetic acid and oxygen, wherein the catalyst composition comprises a porous catalyst support medium which contains a first shell dispersion coating of colloidal palladium metal on the catalyst support surface, and contains a second shell dispersion coating of colloidal gold metal on the catalyst support surface, said catalyst prepared in accordance with claim 1.

5,700,754

BARIUM/CALCIUM CATALYST AND A PROCESS FOR PRODUCING THE SAME

Kanichiro Inui, and Shunji Oshima, both of Ichihara, Japan, assignors to Chisso Corporation, Osaka, Japan

Filed Oct. 17, 1995, Ser. No. 543,999

Claims priority, application Japan, Oct. 18, 1994, HEI6-278366; Mar. 9, 1995, HEI7-078307

Int. Cl.⁶ B01J *23/02*

U.S. Cl. 502—340 **11 Claims**

1. A solid basic catalyst comprising barium and calcium as constituent elements thereof, the barium content thereof being 0.09 to 10% by weight, and the ratio of the calcium content to the barium content being in the range of 6.4 to 793 by weight.

8. A process for producing a solid basic catalyst composed of barium-supporting calcium oxide, which process comprises adding an aqueous solution of at least one kind of nitrate, hydroxide or an organic acid salt of barium, to a suspension having calcium hydroxide or calcium oxide or these compounds dispersed in water, followed by drying the mixture and subjecting the dried material to thermal decomposition at 500° to 1200° C. in vacuum, an inert gas or air, barium being contained in a quantity of 0.09 to 9% by weight and the ratio of the calcium content to the barium content being in a range of 6.4 to 713 by weight.

5,700,755

THERMAL TRANSFER PRINTING RECEIVER SHEET

Gary Wayne Morrison, London; Stephen Mann, and Christopher Bennett, both of Essex, all of United Kingdom, assignors to Imperial Chemical Industries PLC, United Kingdom

PCT No. PCT/GB94/00608, § 371 Date Sep. 5, 1995, § 102(e) Date Sep. 5, 1995, PCT Pub. No. WO94/21470, PCT Pub. Date Sep. 29, 1994

PCT Filed Mar. 23, 1994, Ser. No. 513,838

Claims priority, application United Kingdom, Mar. 24, 1993, 9306073.9

Int. Cl.⁶ B41M *5/035;5/38*

U.S. Cl. 503—227 **19 Claims**

1. A thermal transfer printing receiver sheet comprising a substrate having on one side thereof a dye receiving layer, characterised in that the substrate comprises a porous plastics material having a network of interconnecting pores communicating throughout the substrate.

5,700,756
THERMAL TRANSFER PRINTING DYESHEET
Barry Pack, Ipswich, United Kingdom, assignor to Imperial Chemical Industries PLC, United Kingdom
PCT No. PCT/GB94/01154, § 371 Date Apr. 2, 1996, § 102(e) Date Apr. 2, 1996, PCT Pub. No. WO94/29116, PCT Pub. Date Dec. 22, 1994
PCT Filed May 27, 1994, Ser. No. 556,983
Claims priority, application United Kingdom, Jun. 16, 1993, 9312351
Int. Cl.⁶ B41M *5/035;5/38*
U.S. Cl. 503—227 **16 Claims**

16. A method of thermal transfer printing by transferring thermally transferable dyes from a dyesheet to a receiver using a printer having at least one sensor susceptible to excess haze in the dyesheet, wherein the dyesheet has a backcoat with a haze value of less than 12%, and comprises a crosslinked polymeric binder (a) having a thickness t and containing therein a combination of lubricating particles (b) selected from at least one carboxylic or phosphoric acid, acid amide, ester and multivalent metal salts thereof, each having at least one C_{12-30} alkyl chain and an average particle diameter of 0.1–2.5 μm; and load-bearing particles (c) which are at least one of spherical and elastomeric, with an average particle diameter of 1.2 t–2 t; and wherein the proportions by weight of components a, b and c are given by the formula:

$$b+c/a=0.015 \text{ to } 0.08.$$

5,700,757
TRIAZOLOPYRIDINE DYES AND INTERMEDIATES THEREFOR
Rüdiger Sens, Mannheim; Helmut Reichelt, and Peter Saling, both of Neustadt, all of Germany, assignors to BASF Aktiengesellschaft, Ludwigshafen, Germany
Filed Feb. 2, 1996, Ser. No. 597,559
Claims priority, application Germany, Feb. 15, 1995, 195 04 943.8
Int. Cl.⁶ C07D *471/04;471/02*
U.S. Cl. 503—227 **15 Claims**

1. A triazolopyridine dye of formula I

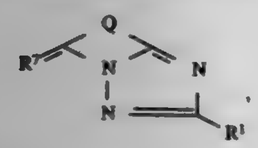

(I)

where

R^1 is C_1–C_{20}-alkyl which is unsubstituted or substituted and can be interrupted by 1 to 4 oxygen atoms in ether functionalities, unsubstituted or substituted phenyl, hydroxyl, unsubstituted or substituted C_1–C_{20}-alkoxy, mercapto or unsubstituted or substituted C_1–C_{20}-alkylthio,

Q is a radical of the formula

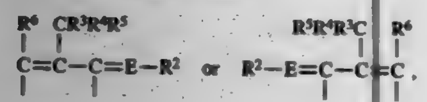

where

R^2 is a 5- or 6-membered carbocyclic or heterocyclic radical which can be benzo-fused,

R^3 is hydrogen or unsubstituted or substituted C_1–C_4-alkyl,

R^4 is hydrogen, unsubstituted or substituted C_1–C_4-alkyl or C_1–C_4-alkoxy,

R^5 is C_1–C_8-alkyl which can be interrupted by 1 or 2 oxygen atoms in ether functionalities and can be phenyl- or hydroxyl-substituted, unsubstituted or substituted phenyl, unsubstituted or substituted thienyl or C_1–C_4-alkoxy which can be interrupted by an oxygen atom in ether functionalities, or the radical $CR^3R^4R^5$ together is C_3–C_7-cycloalkyl, C_1–C_4-haloalkyl, unsubstituted or substituted phenyl or unsubstituted or substituted thienyl,

R^6 is cyano, carbamoyl, carboxyl, C_1–C_4-alkoxycarbonyl or benzothiazolyl, and

E is CH or nitrogen, and

R^7 is oxygen or a radical of the formula

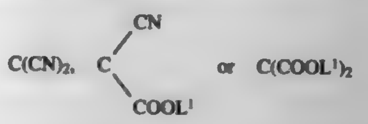

where L^1 is in each case C_1–C_8-alkyl which can be interrupted by 1 or 2 oxygen atoms in ether functionalities, and wherein $CR^3R^4R^5$ is not ethyl.

5,700,758
PYRAZOLINES FOR PROTECTING CROP PLANTS AGAINST HERBICIDES
Wolfgang Rösch, Frankfurt am Main; Erich Sohn, Augsburg; Klaus Bauer, Hanau, and Hermann Bieringer, Eppstein/Taunus, all of Germany, assignors to Hoechst Aktiengesellschaft, Frankfurt, Germany
Division of Ser. No. 848,998, Apr. 21, 1992, abandoned. This application Jun. 6, 1995, Ser. No. 468,850
Claims priority, application Germany, Nov. 30, 1989, 39 39 503.0
Int. Cl.⁶ A01N *25/32;43/56;43/86;* **C07D** *231/06*
U.S. Cl. 504—106 **31 Claims**

1. A method for protecting crop plants against phytotoxic effects of herbicides wherein a compound of formula (I)

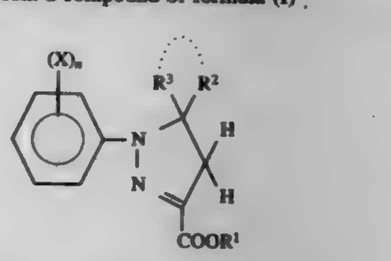

(I)

where

X radicals independently of one another are halogen or haloalkyl,

n is an integer from 1 to 3,

R^1 is hydrogen, alkyl, cycloalkyl, trialkylsilyl, trialkylsilylmethyl or alkyloxyalkyl,

R^2 and R^3 independently of one another are hydrogen, alkyl, C_3–C_6-cycloalkyl, alkenyl, alkynyl, haloalkyl, alkoxyalkyl, hydroxyalkyl, alkoxycarbonyl, alkylcarbonyl, alkylaminocarbonyl, optionally substituted phenyl, halogen or cyano, it being possible for the radicals R^2 and R^3 to form a ring with the 5-C atom of the pyrazoline ring, is used as a safener.

5,700,759
PROCESS AND COMPOSITION FOR CONTROLLING WEEDS COMPRISING A C_7–C_{20} MONOCARBOXYLIC ACID AND A SECOND HERBICIDE
Jerry Caulder, Del Mar, Calif.; R. Hugh Crowley, Mesa, Ark.; Paul S. Zorner, Carlsbad, and Steven L. Evans, Vista, both of Calif., assignors to Mycogen Corporation, San Diego, Calif.
Filed Jun. 7, 1995, Ser. No. 481,964
Int. Cl.⁶ A01N *37/02;43/707*
U.S. Cl. 504—133 **19 Claims**

1. An agricultural composition for controlling weeds, said composition comprising a first ingredient which is a monocarboxylic acid having about seven to about twenty carbon atoms, or a salt thereof, and a second ingredient which is a chemical herbicide.

5,700,760
HERBICIDAL AND PLANT GROWTH REGULANT COMPOSITIONS AND THEIR USE
Ralph W. Magin; Joe D. Sauer, both of Baton Rouge, and Deborah A. Quebedeaux, Thibodaux, all of La., assignors to Albemarle Corporation, Richmond, Va.
Filed Apr. 3, 1996, Ser. No. 627,853
Int. Cl.⁶ A01N *57/04*
U.S. Cl. 504—206 **41 Claims**

1. A method of controlling vegetation which comprises applying to plant foliage a polyvalent metal-free and metalloid-free solution containing a herbicidal or plant growth regulant amount of a composition formed by intimately mixing the following ingredients with water:

a) at least one agriculturally acceptable mine, alkali metal, alkylsulfonium, alkylphosphonium, sulfonylamine, or aminoguanidine salt of glyphosate as the only herbicide used in forming said composition; and

b) a trihydrocarbyl mine oxide surfactant as the only surface active component used in forming said composition, said trihydrocarbyl amine oxide being selected from the group consisting of (i) a single alkyl dimethyl mine oxide in which said alkyl group is a linear alkyl group having in the range of 10 to 14 carbon atoms, (ii) a combination of two alkyl dimethyl amine oxides of (i), and (iii) a combination of at least one alkyl dimethyl amine oxide in which said alkyl group is a linear alkyl group having in the range of 10 to 14 carbon atoms and at least one dialkyl methyl mine oxide in which said alkyl groups are linear alkyl groups each having in the range of 8 to 12 carbon atoms.

5,700,761
HERBICIDAL TRICYCLIC HETEROCYCLES
John Jolly Kilama, Wilmington, Del., assignor to E. I. Du Pont de Nemours and Company, Wilmington, Del., and Degussa Aktiengesellschaft, Frankfurt, Germany
PCT No. PCT/US95/01502, § 371 Date Aug. 15, 1996, § 102(e) Date Aug. 15, 1996, PCT Pub. No. WO95/22547, PCT Pub. Date Aug. 24, 1995
Continuation-in-part of Ser. No. 197,085, Feb. 16, 1994, abandoned. This PCT application Feb. 10, 1995, Ser. No. 693,107
Int. Cl.⁶ C07D *265/36;279/16;295/104;471/02*
U.S. Cl. 504—221 **7 Claims**

1. A compound Formulae I

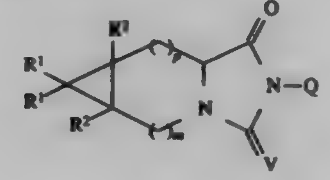

I

wherein

Q is

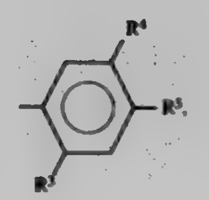

Q-1

-continued

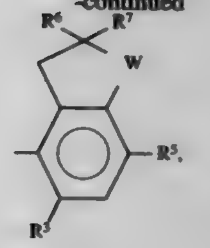

Q-2

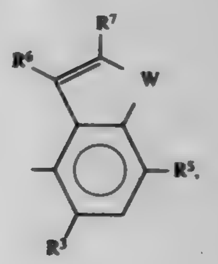

Q-3

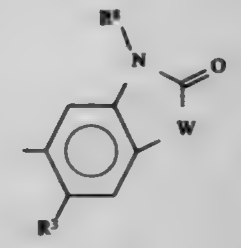

Q-4

or

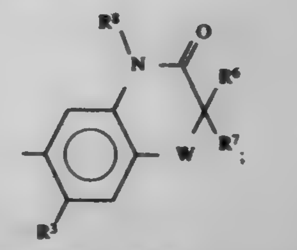

Q-5

R^1 is independently hydrogen; halogen or C_1–C_3 alkyl;

R^2 is independently hydrogen; fluorine; chlorine; or bromine;

V is O or S;

m is 1 or 2;

p is 0 or 1 provided that when m is 2, then p is 0;

W is O or S;

R^3 is halogen;

R^4 is H; C_1–C_8 alkyl; C_1–C_8 haloalkyl; halogen; OH; OR^9; SH; $S(O)_n R^9$; COR^9; CO_2R^9; $C(O)SR^9$; $C(O)NR^{11}R^{12}$; CHO; $CR^{11}{=}NOR^{18}$; $CH{=}CR^{19}CO_2R^9$; $CH_2CHR^{19}CO_2R^9$; $CO_2N{=}CR^{13}R^{14}$; NO_2; CN; $NHSO_2R^{15}$; $NHSO_2NHR^{15}$; NR^8R^{20}; NH_2 or phenyl optionally substituted with R^{21};

n is 0, 1 or 2;

R^5 is C_1–C_2 alkyl; C_1–C_2 haloalkyl; OCH_3; SCH_3; $OCHF_2$; halogen; CN or NO_2;

R^6 is H; C_1–C_3 alkyl or halogen;

R^7 is H; C_1–C_3 alkyl; halogen; C_1–C_3 haloalkyl; cyclopropyl; vinyl; C_2 alkynyl; CN; $C(O)R^{20}$; CO_2R^{20}; $C(O)NR^{20}R^{22}$; $CR^{16}R^{17}CN$; $CR^{16}R^{17}C(O)R^{20}$; $CR^{16}R^{17}CO_2R^{20}$; $CR^{16}R^{17}C(O)NR^{20}R^{22}$; $CHR^{16}OH$; $CHR^{16}OC(O)R^{20}$ or $OCHR^{16}OC(O)NR^{20}R^{22}$; or when Q is Q-2, R^6 and R^7 can be taken together with the carbon to which they are attached to form C=O;

R^8 is H; C_1–C_6 alkyl; C_1–C_6 haloalkyl; C_2–C_6 alkoxyalkyl; C_3–C_6 alkenyl; C_3–C_6 alkynyl; C_4–C_7 cycloalkylalkyl;

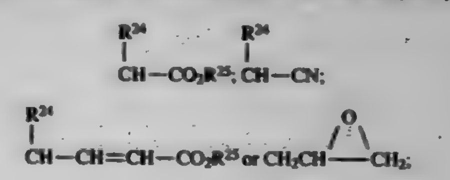

R^9 is C_1–C_8 alkyl; C_3–C_8 cycloalkyl; C_3–C_8 alkenyl; C_3–C_8 alkynyl; C_1–C_8 haloalkyl; C_2–C_8 alkoxyalkyl; C_2–C_8 alkylthioalkyl; C_2–C_8 alkylsulfinylalkyl; C_2–C_8 alkylsulfonylalkyl; C_4–C_8 alkoxyalkoxyalkyl; C_4–C_8 cycloalkylalkyl; C_6–C_8 cycloalkoxyalkyl; C_4–C_8 alkenyloxyalkyl; C_4–C_8 alkynyloxyalkyl; C_3–C_8 haloalkoxyalkyl; C_4–C_8 haloalkenyloxyalkyl; C_4–C_8 haloalkynyloxyalkyl; C_6–C_8 cycloalkylthioalkyl; C_4–C_8 alkenylthioalkyl; C_4–C_8 alkynylthioalkyl; C_1–C_4 alkyl substituted with phenoxy or benzyloxy, each ring optionally substituted with halogen, C_1–C_3 alkyl or C_1–C_3 haloalkyl; C_4–C_8 trialkylsilylalkyl; C_3–C_8 cyanoalkyl; C_3–C_8 halocycloalkyl; C_3–C_8 haloalkenyl; C_5–C_8 alkoxyalkenyl; C_5–C_8 haloalkoxyalkenyl; C_5–C_8 alkylthioalkenyl; C_3–C_8 haloalkynyl; C_5–C_8 alkoxyalkynyl; C_5–C_8 haloalkoxyalkynyl; C_5–C_8 alkylthioalkynyl; C_2–C_8 alkylcarbonyl; benzyl optionally substituted with halogen, C_1–C_3 alkyl or C_1–C_3 haloalkyl; $CHR^{16}COR^{10}$; $CHR^{16}P(O)(OR^{10})_2$; $CHR^{16}P(S)(OR^{10})_2$; $P(O)(OR^{10})_2$; $P(S)(OR^{10})_2$; $CHR^{16}C(O)NR^{11}R^{12}$; $CHR^{16}C(O)NH_2$; $CHR^{16}CO_2R^{10}$; CO_2R^{10}; SO_2R^{10}; phenyl optionally substituted with R^{21};

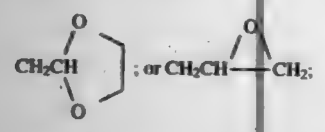

R^{10} is C_1–C_6 alkyl; C_1–C_6 haloalkyl; C_3–C_6 alkenyl or C_3–C_6 alkynyl;
R^{11} and R^{13} are independently H or C_1–C_4 alkyl;
R^{12} and R^{14} are independently C_1–C_4 alkyl or phenyl optionally substituted with halogen, C_1–C_3 alkyl or C_1–C_3 haloalkyl; or
R^{11} and R^{12} are taken together along with the nitrogen to which they are attached to form a piperidinyl, pyrrolidinyl or morpholinyl ring, each ring optionally substituted with C_1–C_3 alkyl, phenyl or benzyl; or
R^{13} and R^{14} are taken together with the carbon to which they are attached to form C_3–C_8 cycloalkyl;
R^{15} is C_1–C_4 alkyl or C_1–C_4 haloalkyl;
R^{16} and R^{17} are independently H or C_1–C_5 alkyl;
R^{18} is H, C_1–C_6 alkyl, C_3–C_6 alkenyl or C_3–C_6 alkynyl;
R^{19} and R^{24} are independently H, C_1–C_4 alkyl or halogen; or
R^9 and R^{19} are taken together as C_2–C_3 alkylene;
R^{20}, R^{21}, and R^{25} are independently H or C_1–C_4 alkyl;
R^{22} is C_1–C_2 alkyl; C_1–C_2 haloalkyl; OCH_3; SCH_3; $OCHF_2$; or CN

and their corresponding N-oxides and agriculturally-suitable salts.

5,700,762

SUBSTITUTED BENZOYL (HETERO) CYCLIC DIONES

Shy-Fuh Lee, Sunnyvale, Calif.; Takashi Nishizaka, and Kenichi Komatsubara, both of Kawasaki, Japan, assignors to Sandoz Ltd., Basel, Switzerland

Continuation of Ser. No. 411,086, Sep. 22, 1989, Pat. No. 5,623,124, which is a continuation-in-part of Ser. No. 182,534, Apr. 18, 1988, abandoned. This application May 23, 1995, Ser. No. 448,008

Int. Cl.⁶ A01N *43/16*

U.S. Cl. 504—292 **23 Claims**

1. A compound having the formula I

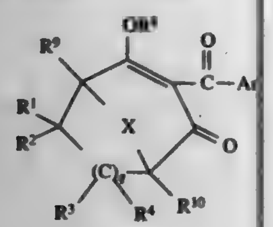

(I)

wherein,

Ar is selected from the groups

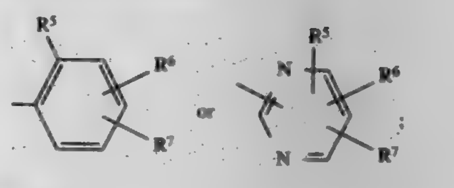

X is oxygen or;
each of R^1, R^2, R^3, R^4, R^9 and R^{10} is, independently, hydrogen, C_{1-8}alkyl or $COOR^{16}$;
R^5 is C_{1-8}alkyl, optionally substituted with one to six halogen atoms; C_{1-8}alkoxy, optionally substituted with one to six halogen atoms; C_{1-8} alkylcarbonyl; C_{1-8}alkoxycarbonyl; $NR^{13}R^{14}$; $O_nS(O)_{n'}R^{12}$; NR^{15} SO_2R^{12}; halogen; cyano; or nitro;
each of R^6 and R^7 is independently hydrogen or selected from the values of R^5; or R^6 and R^7 together form the group -Y-W-Z-;
R^8 is hydrogen, C_{1-8}alkyl, optionally substituted with one to four halogen atoms, C_{1-8}alkylcarbonyl, C_{1-8}alkoxycarbonyl, optionally substituted with one to four halogen atoms, $C(O)NR^{13}R^{14}$, C_{1-8}alkylsulfonyl, P(O)— $(OR^{11})_2$, $R^{13}P(O)OR^{11}$ or benzoyl or a salt forming moiety;
R^{11} is C_{1-8}alkyl;
R^{12} is C_{1-8}alkyl, optionally substituted with one to six halogen atoms;
each of R^{13}, R^{14}, R^{15} and R^{16} is, independently, hydrogen or C_{1-8}alkyl;
each of R^{17} and R^{18} is independently hydrogen, halogen, or C_{1-8}alkyl optionally substituted with one to six halogen atoms; or R^{17} and R^{18} together form an oxo group;
each of R^{19} and R^{20} is, independently, hydrogen, halogen, or C_{1-8}alkyl optionally substituted with one to six halogen atoms;
W is $—(CR^{17}R^{18})_t—(CR^{19}R^{20})_{t'}—$ or SO_2;
each of Y and Z is independently oxygen, sulfur, SO_2, C═O or $CR^{15}R^{16}$; with the proviso that Y and Z are attached to adjacent carbons;
n is zero or one;
n' is zero, one or two;
q is zero, one or two;
t is one or two; and
t' is zero or one.

17. A method for the control of weeds which comprises applying to the weed or its locus an herbicidally effective amount of a compound of formula I according to claim 1.

5,700,763

THERMALLY STABLE OIL-BASED DRILLING FLUID

Donald C. Van Slyke, Brea, Calif., assignor to Union Oil Company of California, El Segundo, Calif.

Continuation of Ser. No. 268,801, Jun. 30, 1994, Pat. No. 5,629,270. This application Dec. 11, 1996, Ser. No. 763,430

Int. Cl.⁶ C09K *7/06*

U.S. Cl. 507—125 **20 Claims**

2. An oil-base drilling fluid having a density of about 0.9 kg/l (7.5 pounds per gallon (ppg)) to about 2.4 kg/l (20 ppg) and comprising:
(a) an oil,
(b) a weighting agent,
(c) a surfactant,
(d) a non-organophilic clay,
(e) a non-sulfonated thermoplastic polymer selected from the group consisting of polystyrene, poly(o-methylstyrene), poly(m-methylstyrene), poly(p-methylstyrene), poly(2,4 -dimethylstyrene), poly(2,5 -dimethylstyrene), poly(p-tert-butylstyrene), poly(p-chlorostyrene), poly(α-methylstyrene), and co- and terpolymers whose constituent units are selected from the group consisting of polystyrene, poly(o-methylstyrene), poly(m-methylstyrene), poly(p-

methylstyrene), poly(2,4 -dimethylstyrene), poly(2,5-dimethylstyrene), poly(p-tert-butylstyrene), poly(p-chlorostyrene), and poly(α -methylstyrene); and
(f) less than about 0.143 g/m³ (0.05 pounds per barrel (ppb)) sulfonated polymer.

5,700,764

LUBRICANT COMPOSITIONS

David Kenvyn Walters, Camberley, England, and Ian Macpherson, Richmond, Va., assignors to Ethyl Petroleum Additives Limited, Bracknell, England

Filed May 8, 1996, Ser. No. 646,830

Claims priority, application United Kingdom, May 22, 1995, 9510292

Int. Cl.⁶ C10M *141/10;141/08*

U.S. Cl. 508—338 **2 Claims**

1. A method of inhibiting pitting and enhancing tooth life of gears in a gear box or axle of a vehicle which comprises introducing into the gear box or axle a gear oil comprising at least one oil of lubricating viscosity and at least the following additive components:
a) at least one oil-soluble, metal-free, sulfur-containing antiwear and/or extreme pressure agent having a copper corrosion test activity of not more than 65, wherein the gear oil contains from 0.6 to 3.0 wt % of sulfur;
b) at least one oil-soluble metal free, phosphorus-and nitrogen-containing antiwear and/or extreme pressure agent, wherein the gear oil contains from 0.04 to 0.25 wt % of phosphorus;
c) from 0.07 to 0.50 wt % of at least one oil-soluble organic carboxylic acid; and
d) from 0.2 to 0.8 wt % of at least one oil-soluble organic amine, and keeping that gear oil therein as the gear lubricant therefor for the period of service recommended or specified by the manufacturer of the vehicle.

5,700,765

ADDITIVE SYSTEM AND METHOD FOR EXTENDING THE SERVICE LIFE OF PETROLEUM BASED HYDRAULIC FLUIDS

John Franklin Barnes, Arlington; Karl N. Gutzke, Irving, and Robert M. Hooks, Fort Worth, all of Tex., assignors to NCH Corporation, Irving, Tex.

Continuation of Ser. No. 182,652, Jan. 18, 1994, abandoned. This application Aug. 3, 1995, Ser. No. 510,640

Int. Cl.⁶ C09K *5/00;15/08;15/14;* **C10L** *1/10*

U.S. Cl. 508—378 **37 Claims**

1. An additive useful for extending the service life of petroleum based hydraulic fluids, the additive comprising as essential elements a stabilized zinc dialkyldithiophosphate, a substituted sulfolane, an alkyl phenol and from about 5 percent to about 20 percent by weight of the additive of a solvent component selected from the group consisting of C_9–C_{11} and C_{12}–C_{13} alcohols, wherein the ratio of substituted sulfolane to alkyl phenol is about 3.2 to 1 and wherein the treat rate for the subject additive ranges from about 1.5 percent to about 13.5 percent by weight of the hydraulic fluid.

179–254 O.G.–97–14: QL3

5,700,766

USE OF AN AMPHOTERIC SURFACTANT AS A FRICTION-REDUCING AGENT

Martin Hellsten, Ödsmål, and Ian Harwigsson, Malmö, both of Sweden, assignors to Berol Nobel AB, Stenungsund, Sweden

PCT No. PCT/EP94/03431, § 371 Date Apr. 19, 1996, § 102(e) Date Apr. 19, 1996, PCT Pub. No. WO95/11288, PCT Pub. Date Apr. 27, 1995

PCT Filed Oct. 17, 1994, Ser. No. 632,461

Claims priority, application Sweden, Oct. 21, 1993, 9303458

Int. Cl.⁶ C10M *133/06;173/02*

U.S. Cl. 508—500 **9 Claims**

1. A method for reducing the flow resistance between a solid surface and a water-based liquid system which comprises adding to said system a water soluble amphoteric surfactant having a molecular weight of less than 1400, or a salt thereof, wherein said amphoteric surfactant contains one or more monovalent hydrophobic groups forming a hydrophobic portion containing 10–36 carbon atoms; one or more primary, secondary or tertiary amine groups; and one or more carboxylic groups.

5,700,767

DOWNHOLE WELL LUBRICANT

Ernest K. Adams, San Patricio County, Tex., assignor to CJD Investments, Inc., Corpus Christi, Tex., a part interest

Filed Sep. 21, 1995, Ser. No. 531,795

Int. Cl.⁶ C10M *129/00;133/04*

U.S. Cl. 508—539 **8 Claims**

1. A downhole well lubricant having the properties of coating metal surfaces submerged in a water based well liquid and, in response to friction between the coated metal surfaces submerged in the water based well liquid, producing a greasy water based emulsion on the metal surfaces, the lubricant consisting essentially of

20–70 pounds per barrel of a stearate surfactant; and
liquid component being
20–50% of a filming amine;
20–80% of an activator selected from the group consisting of petroleum solvent comprising a mixture of C7–C10 saturated hydrocarbons, 1, 2, 4 trimethylbenzene and C8+ aromatics; coconut oil; terpene; xylene; toluene; benzene; mineral oil; turpentine; and mixtures thereof,
balance diluent.

5,700,768

FLOOR CLEANING COMPOSITIONS

Robert Zhong Lu, Mahwah, N.J., assignor to Reckitt & Colman Inc., Montvale, N.J.

Filed Aug. 24, 1995, Ser. No. 519,133

Int. Cl.⁶ C11D *1/83*

U.S. Cl. 510—214 **28 Claims**

1. A floor cleaning composition comprising:
A) 0.001 to 10% by weight a nonionic surfactant composition having an average molecular weight of about 2,000 to about 8,000;
B) 0.001–10% by weight of an amphoteric hydrotrope;
C) 0.001 to 10% by weight of an anionic surfactant composition;
D) at least about 80% by weight water.

5,700,769

ENHANCEMENT OF ENZYME REACTIONS

Palle Schneider, Ballerup; Lars Sparre Conrad; Søren Ebdrup, both of Copenhagen, and Birgitte Yde, Farum, all of Denmark, assignors to Novo Nordisk A/S, Bagsvaerd, Denmark

PCT No. PCT/DK93/00393, § 371 Date May 22, 1995, § 102(e) Date May 22, 1995, PCT Pub. No. WO94/12619, PCT Pub. Date Jun. 9, 1994

PCT Filed Dec. 1, 1993, Ser. No. 436,375

Claims priority, application Denmark, Dec. 1, 1992, 1443/92

Int. Cl.⁶ C11D *3/386; D06L 3/16*

U.S. Cl. 510—305 **5 Claims**

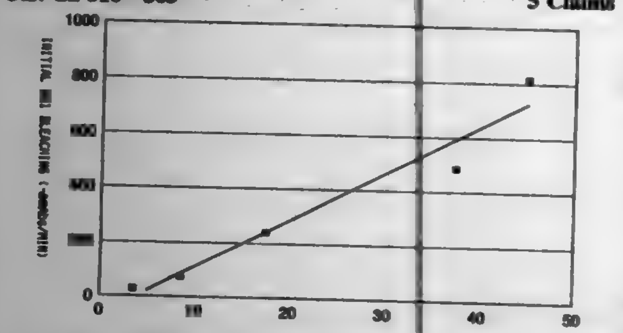

1. A detergent additive comprising an enzyme exhibiting peroxidase activity, a source of hydrogen peroxide, and an enhancer capable of being oxidized by the peroxidase exhibiting activity, wherein the oxidized enhancer is an electron acceptor having a half-life greater than the inverse of the turnover number of the oxidation of the enhancer present in the amount of about 0.1–250 μM wherein said enhancer is 2,2-azino-bis (3-ethylbenzothiazoline-6-sulfonate, and wherein the additive inhibits the transfer of a textile dye from a first dyed fabric to a second fabric when said fabrics are washed together.

5,700,770

DYE TRANSFER INHIBITION AND NOVEL PEROXIDASE

Ture Damhus; Ole Kirk, both of Copenhagen; Gitte Pedersen, Frederiksberg C, all of Denmark, and Manuel Garcia Venegas, Cincinnati, Ohio, assignors to Novo Nordisk A/S, Bagsvaerd, Denmark

Division of Ser. No. 105,222, Aug. 11, 1993, Pat. No. 5,605,832, which is a division of Ser. No. 599,331, Oct. 17, 1990, Pat. No. 5,273,896, which is a continuation-in-part of Ser. No. 421,414, Oct. 13, 1989, abandoned. This application May 23, 1995, Ser. No. 447,853

Int. Cl.⁶ C11D *3/386;3/395*

U.S. Cl. 510—305 **3 Claims**

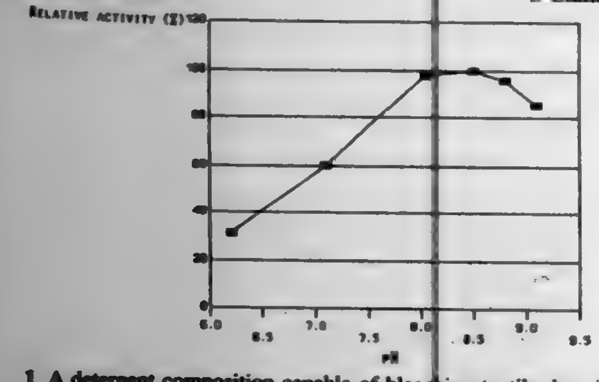

1. A detergent composition capable of bleaching textile dyes in solution or dispersion, comprising;

(a) an enzyme exhibiting oxidase activity on phenolic compounds selected from the group of laccase and catechol oxidase, wherein the enzyme is in the form of a non-dusting granulate, a stabilized liquid or a protected enzyme;
(b) an oxidizable substrate; and
(c) a surfactant.

5,700,771

POLYHYDROXY FATTY ACID AMIDE SURFACTANTS IN PERCARBONATE BLEACH-CONTAINING COMPOSITIONS

Frederick Edward Hardy, Ponteland Newcastle-On-Tyne, United Kingdom, and Bruce Prentiss Murch, Cincinnati, Ohio, assignors to The Procter & Gamble Company, Cincinnati, Ohio

Continuation of Ser. No. 79,685, Jun. 17, 1993, abandoned, which is a continuation of Ser. No. 756,098, Sep. 6, 1991, abandoned, which is a continuation-in-part of Ser. No. 589,738, Sep. 28, 1990, abandoned. This application Mar. 7, 1995, Ser. No. 400,632

Int. Cl.⁶ C11D *1/66;3/395*

U.S. Cl. 510—315 **3 Claims**

1. A detergent composition, comprising:

(a) from about 1% to about 50%, by weight, of a polyhydroxy fatty acid amide surfactant of the formula:

$$R^2-\underset{\displaystyle\overset{\|}{O}}{\overset{}{C}}-\underset{}{N}(R^1)-Z$$

wherein R^1 is methyl, R^2 is C_9–C_{17} alkyl, or a mixture thereof, and Z is a polyhydroxyhydrocarbyl derived from glucose;

(b) from about 3% to about 40%, by weight, of an anionic surfactant which is a member selected from the group consisting of alkyl ester sulfonate surfactants, alkyl sulfate surfactants, and alkyl alkoxylated sulfate surfactants, and mixtures thereof;
(c) from about 1% to about 22.3%, by weight, of a percarbonate bleaching agent; and
(d) from about 5% to about 50%, by weight, of a non-phosphate builder which is a member selected from the group consisting of zeolites, layered silicates and mixtures thereof; said composition being free of perborate bleach.

5,700,772

DETERGENT COMPOSITION COMPRISING AN AMIDE-ETHER DERIVATIVE MIXTURE AND AN AMPHOTERIC SURFACTANT

Kazuo Isobe; Toshikazu Azuma, both of Wakayama; Hideyo Nishikawa, Funabashi, and Takashi Imamura, Hannan, all of Japan, assignors to Kao Corporation, Tokyo, Japan

PCT No. PCT/JP95/01565, § 371 Date Apr. 10, 1996, § 102(e) Date Apr. 10, 1996, PCT Pub. No. WO96/05282, PCT Pub. Date Feb. 22, 1996

PCT Filed Aug. 7, 1995, Ser. No. 624,631

Claims priority, application Japan, Aug. 10, 1994, 6-188059

Int. Cl.⁶ C11D *1/66;1/90;1/92*

U.S. Cl. 510—421 **5 Claims**

1. A detergent composition comprising the following components (A) and (B):

(A) an amide-ether derivative mixture comprising an amide-ether carboxylic acid or a salt thereof represented by the following general formula (1) and an amide-ether represented by the following general formula (2) in a weight ratio (1)/(2) of 95:5 to 60:40 in a proportion of at least 50 wt. % in total based on solids in the component (A), and containing glycerol derivatives represented by the following general formula (3) in a proportion not higher than 5 wt. % of the solids:

$$R^1-C(=O)-N(R^2)-(CH_2CH_2O)_n-CH_2COOM \quad (1)$$

$$R^1-C(=O)-N(R^3)-(CH_2CH_2O)_n-H \quad (2)$$

-continued

$$\begin{array}{l} CH_2OR^4 \\ | \\ CHOR^4 \\ | \\ CH_2OR^4 \end{array} \quad (3)$$

wherein R^1 is a linear or branched alkyl or alkenyl group having 7–17 carbon atoms, or a phenyl group substituted by an alkyl group having 7–17 carbon atoms,, R^2 is a hydrogen atom or an alkyl group having 1–3 carbon atoms, M is a hydrogen atom, alkali metal, alkaline earth metal, ammonium, alkanolamine or basic amino acid, R^3 is a hydrogen atom or an alkyl group having 1–3 carbon atoms, and R^4 is a hydrogen atom, $-(CH_2CH_2O)_nCH_2COOM$ or $-(CH_2CH_2O)_mH$, n and m are independently a number of from 1 to 10 with the proviso that respective R^1, M, n and m in the general formulae (1), (2), and (3) may be identical with or different from one another; and

(B) an amphoteric surfactant selected from the group consisting of amido amino acid, carbobetaine, amidobetaine, amidosulfobetaine and sulfobetaine,

wherein the content of the component (A) is 3–30 wt. %, and the content of the component (B) is 1–30 wt. %.

5,700,773

LIGHT DUTY LIQUID CLEANING COMPOSITIONS

Gary Jakubicki, Robbinsville; Elizabeth McCandish, Highland Park; Len Zyzyck, Skillman, all of N.J., and Julien Drapier, Seraing, Belgium, assignors to Colgate-Palmolive Co., Piscataway, N.J.

Filed Apr. 8, 1996, Ser. No. 629,130

Int. Cl.⁶ C11D *1/12;1/75;1/83;3/32*

U.S. Cl. 510—426 **5 Claims**

1. A clear light duty liquid cleaning composition which consists essentially of approximately by weight:

(a) 8% to 24% of an alkali metal or ammonium salt of a C_{8-18} ethoxylated alkyl ether sulfate;
(b) 1% to 9% of an amine oxide surfactant;
(c) 0 to 6% of an alkali metal salt of a linear C_8–C_{16} alkyl benzene sulfonate surfactant;
(d) 0 to 12% of at least one solubilizing agent;
(e) 2% to 14% of an alkyl polyglucoside surfactant;
(f) 0.5% to 2.5% of a C_{12}–C_{14} alkyl monoalkanol amide;
(g) 0.25% to 1.75% of an ethoxylated C_{12}–C_{14} alkyl monoalkanol amide;
(h) 1% to 10% of a magnesium salt of a linear C_8–C_{16} alkyl benzene sulfonate surfactant; and
(i) the balance being water, wherein the composition has a light transmission of at least 95%.

5,700,774

COMPOSITIONS COMPRISING BONE MORPHOGENIC PROTEINS AND TRUNCATED PARATHYROID HORMONE RELATED PEPTIDE, AND METHODS OF INDUCING CARTILAGE BY ADMINISTRATION OF SAME

Gary Hattersley, Cambridge, and Vicki A. Rosen, Chestnut Hill, both of Mass., assignors to Genetics Institute, Inc., Cambridge, Mass.

Filed Mar. 26, 1996, Ser. No. 622,101

Int. Cl.⁶ A61K *38/22;38/18;38/29*

U.S. Cl. 514—2 **17 Claims**

1. A composition comprising:

(a) at least one protein member of the bone morphogenetic protein (BMP) family of proteins; and
(b) a truncated parathyroid hormone related peptide (PTHrP) comprising amino acids 1 to 34 of PTHrP; said composition having the activity of inducing the formation or maintenance of cartilaginous tissue in a patient when administered to said patient.

5,700,775

METHOD AND TREATMENT COMPOSITION FOR DECREASING PATIENT TIME IN CATABOLIC STATE AFTER TRAUMATIC INJURY

Mark K. Gutniak, Hässelby Strandväg 26, S-165 65 Hässelby, Sweden; Thomas R. Coolidge, 181 Beebe Hill Rd., Falls Village, Conn. 06031; Robert R. Recker, 3309 S. 116th St., Omaha, Nebr. 68144, and Fred W. Wagner, R.R. 1, Box 77B, Walton, Nebr. 68461

Filed Mar. 24, 1995, Ser. No. 410,353

Int. Cl.⁶ A61K *38/27;37/00*

U.S. Cl. 514—12 **20 Claims**

1. A method of decreasing patient time in a catabolic state after traumatic injury, comprising:

administering systemically to a patient commencing at a time from just before to just after a traumatic injury a catabolic state time reducing effective amount of human GRF(1-44)-NH_2 or a biologically active analog thereof, and further providing that a somatostatin inhibiting agent is administered prior to the administration of the GRF(1-44)-NH_2.

5,700,776

MEDICAMENTS COMPRISING GLICENTIN AS ACTIVE INGREDIENT

Akira Ohneda, Sendai; Kazuyuki Sasaki, Tokyo; Yohei Natori, Tokyo, and Tomohisa Nagasaki, Tokyo, all of Japan, assignors to Nisshin Flour Milling Co., Ltd., Tokyo, Japan

Division of Ser. No. 83,501, Jun. 30, 1993. This application Apr. 3, 1995, Ser. No. 415,939

Claims priority, application Japan, Jul. 13, 1992, 4-185066

Int. Cl.⁶ C07K *7/34;* **A61K** *38/00;38/26*

U.S. Cl. 514—12 **11 Claims**

1. A method for treating diabetes, which comprises administering to a mammal in need thereof an effective amount of a composition comprising glicentin and a pharmaceutically acceptable carrier or excipient, said composition being in a form selected from the group consisting of powder, granules, tablets, capsules, injections, syrups, suspensions and emulsions.

5,700,777

FATTY ACID - PULMONARY SURFACTANT CONJUGATES

Virender Kumar Sarin, Libertyville, Ill.; Darryl Robin Absolom, Columbus, Ohio, and Shanker Lal Gupta, Vernon Hills, Ill., assignors to Abbott Laboratories, Abbott Park, Ill.

Division of Ser. No. 808,075, Dec. 10, 1991, which is a continuation of Ser. No. 525,581, May 21, 1990, abandoned. This application Apr. 24, 1995, Ser. No. 428,816

Int. Cl.⁶ A61K *38/00;* **C07K** *5/00;7/00*

U.S. Cl. 514—12 **8 Claims**

1. A composition of matter comprising a covalently linked compound consisting of two parts and having the structural formula: FA-SP-C wherein -SP-C is a protein selected from the group comprising human, porcine, canine and bovine surfactant associated protein C (SP-C), produced by peptide synthesis or recombinant DNA means and wherein FA- is a single fatty acid selected from the group of fatty acids having a carbon length from two (2) to about twenty (20) carbon atoms and wherein said fatty acid is covalently attached to the N-terminal end of SP-C.

5,700,778

CONOTOXINS I

Baldomero M. Olivera, Salt Lake City, Utah; Jean E.F. Rivier, La Jolla, Calif.; Lourdes J. Cruz, Salt Lake City, Utah; Fe Abogadie, Evanston, Ill.; Chris E. Hopkins, Salt Lake City, Utah; John Dykert, Vista, Calif., and Josep L. Torres, Barcelona, Spain, assignors to The Salk Institute for Biological Studies, La Jolla, Calif., and University of Utah Research Foundation, Salt Lake City, Utah

Division of Ser. No. 84,848, Jun. 29, 1993, Pat. No. 5,432,155. This application Jun. 2, 1995, Ser. No. 458,499

Int. Cl.[6] C07K *7/08*

U.S. Cl. 514—12 **8 Claims**

1. A substantially pure conotoxin which is highly selective for a specific human receptor, which conotoxin is selected from the group consisting of:

Gly-Xaa-Ser-Phe-Cys-Lys-Ala-Asp-Glu-Lys-Xaa-Cys-Glu-Tyr-His-Ala-Asp-Cys-Cys-Asn-Cys-Cys-Leu-Ser-Gly-Ile-Cys-Ala-Xaa-Ser-Thr-Asn-Trp-Ile-Leu-Pro-Gly-Cys-Ser-Thr-Ser-Ser-Phe-Phe-Lys-Ile (SEQ ID NO:7) wherein Xaa is 4Hyp;

Gly-Cys-Cys-Ser-His-Pro-Ala-Cys-Ser-Gly-Lys-Tyr-Gln-Xaa-Tyr-Cys-Arg-Xaa-Ser (SEQ ID NO:8) wherein Xaa is Gla and the C-terminus is amidated;

His-Xaa-Xaa-Cys-Cys-Leu-Tyr-Gly-Lys-Cys-Arg-Arg-Tyr-Xaa-Gly-Cys-Ser-Ser-Ala-Ser-Cys-Cys-Gln (SEQ ID NO:9) wherein Xaa is 4Hyp;

Cys-Lys-Thr-Tyr-Ser-Lys-Tyr-Cys-Xaa-Ala-Asp-Ser-Xaa-Cys-Cys-Thr-Xaa-Gln-Cys-Val-Arg-Ser-Tyr-Cys-Thr-Leu-Phe (SEQ ID NO:10) wherein Xaa is Gla and the C-terminus is amidated;

Ser-Thr-Ser-Cys-Met-Glu-Ala-Gly-Ser-Tyr-Cys-Gly-Ser-Thr-Thr-Arg-Ile-Cys-Cys-Gly-Tyr-Cys-Ala-Tyr-Phe-Gly-Lys-Lys-Cys-Ile-Asp-Tyr-Pro-Ser-Asn (SEQ ID NO:11);

Gly-Glu-Xaa-Xaa-Val-Ala-Lys-Met-Ala-Ala-Xaa-Leu-Ala-Arg-Xaa-Asn-Ile-Ala-Lys-Gly-Cys-Lys-Val-Asn-Cys-Tyr-Pro (SEQ ID NO:12) wherein Xaa is Gla; and

Glu-Ser-Glu-Glu-Gly-Gly-Ser-Asn-Ala-Thr-Lys-Lys-Pro-Tyr-Ile-Leu (SEQ ID NO:13), wherein Glu in the 1-position is pGlu and the C-terminus is amidated.

5,700,779

BRADYKININ ANTAGONIST PEPTIDES INCORPORATING N-SUBSTITUTED GLYCINES

Val S. Goodfellow, Westminster, Colo.; Manoj V. Marathe, Pittsburgh, Pa.; Eric T. Whalley, Golden, Colo.; Timothy D. Fitzpatrick, Boulder, Colo., and Karen G. Kuhlman, Denver, Colo., assignors to Cortech, Inc., Denver, Colo.

Continuation of Ser. No. 208,115, Mar. 9, 1994, abandoned. This application Jun. 20, 1996, Ser. No. 668,100

Int. Cl.[6] C07K *7/18*

U.S. Cl. 514—14 **13 Claims**

1. A peptide of the formula:

$$Z\text{-}Z^0\text{-}A^1\text{-}B^2\text{-}C^3\text{-}D^4\text{-}E^5\text{-}F^6\text{-}G^7\text{-}H^8\text{-}I^9$$

wherein

Z is hydrogen, acetyl, adamantylcarboxyl or adamantylacetyl or is absent;

Z^0 is a direct bond, hydrogen, D or L-Arg, D or L-Lys, D or L-ornithine, or δ-Gpa or is absent;

A^1 is D or L-Arg, D or L-Lys, D or L-ornithine, or δ-Gpa;

B^2 is Pro, Hyp, sarcosine, Ser, Thr or Gly;

C^3 is Hyp, Pro, sarcosine or Gly;

D^4 is Gly, Ala or Thi;

E^5 is Phe, Igl or Thi;

F^6 Ser or Cys;

G^7 is DTic, Igl, DPhe or an N-substituted glycine residue selected from NBng, DNBng or DCpg;

H^8 is Oic or an N-substituted glycine residue selected from NChg, NCpg, NPhg or $(C_1\text{–}C_{12})$alkyl substituted NChg; and

I^9 is absent or Arg; provided that at least one of G^7 or H^8 is an N-substituted glycine residue.

5,700,780

ANTIVIRAL PEPTIDE DERIVATIVES HAVING A 2-OXOALKYL AMINO ACID SIDE CHAIN

Pierre Louis Beaulieu, Montreal; Robert Déziel, Mont-Royal, and Pierre Lavallée, Rosemere, all of Canada, assignors to Boehringer Ingelheim (Canada), Ltd., Laval, Canada

Continuation of Ser. No. 90,682, Jul. 13, 1993, abandoned, which is a continuation of Ser. No. 926,605, Aug. 7, 1992, abandoned, which is a continuation of Ser. No. 547,712, Jul. 3, 1990, abandoned. This application Oct. 11, 1995, Ser. No. 540,862

Claims priority, application Canada, Jul. 7, 1989, 605062

Int. Cl.[6] A61K *38/00;* **C07K** *5/00*

U.S. Cl. 514—17 **6 Claims**

1. A peptide of formula I

$$X\{-NR^1-CH(R^2)-C(W^1)\}_n-NH-CR^3(R^4)-$$
$$C(W^2)-NR^5-CH\{CH_2C(O)-Y\}-C(W^3)-NH-CR^6-\{CR^7(R^8)-$$
$$COOH\}-C(W^4)-NH-CR^9(R^{10})-Z$$

wherein

X is 2-ethylbutanoyl or phenylpropionyl

R^1 is methyl

R^2 is 1-methylethyl

R^3 is hydrogen

R^4 is 1-methylpropyl or 1,1-dimethylethyl

R^5 is hydrogen

R^6 is hydrogen

R^7 and R^8, each independently, are hydrogen or methyl

R^9 is hydrogen

R^{10} is 2-methylpropyl or 2,2-dimethylpropyl

W^1, W^2, W^3 and W^4 are oxo

Y is methyl, pentyl, heptyl, undecyl or cyclopentyl

Z is hydrogen, COOH or $COHN_2$

and n is the integer zero or one

or a therapeutically acceptable salt thereof.

5,700,781

METHOD FOR TREATING KAPOSI'S SARCOMA AND HIV INFECTIONS

Pamela Jo Harris, 4000 Massachusetts Ave., NW., Apt. 634, Washington, D.C. 20009

Continuation of Ser. No. 317,909, Oct. 4, 1994, abandoned. This application Nov. 10, 1994, Ser. No. 338,166

Int. Cl.[6] A61K *38/00;39/21;* **C07K** *1/00*

U.S. Cl. 514—21 **3 Claims**

1. A method of treating an individual infected with HIV comprising the step of administering an amount of human chorionic gonadotropin (HCG) such that said individual has a blood level of HCG of at least 10,000 IU per liter of blood is attained.

5,700,782

ENTERAL NUTRITIONAL PRODUCT

Frederick Oliver Cope, Worthington; Linda Sue Rausch, Blacklick; Ernest William Richards, Columbus; Michelle Marie Smith, Westerville; Bonnie Chandler Abbruzzese, Dublin, and Joan Marie Pero, Richmond Heights, all of Ohio, assignors to Abbott Laboratories, Abbott Park, Ill.

Continuation of Ser. No. 69,067, May 28, 1993, abandoned. This application Feb. 7, 1995, Ser. No. 385,389

Int. Cl.[6] A23J *3/16;1/20;* **A23L** *1/052*

U.S. Cl. 514—21 **19 Claims**

1. A liquid enteral nutritional product comprising per liter:

(a) about 55 to about 76 g of protein;

(b) about 39 to about 43 g of fat, said fat having a fatty acid profile such that, by weight:

(i) the ratio of the sum of the n-6 fatty acids to the sum of the n-3 fatty acids ranges from about 1.37 to about 1.70;

(ii) eicosapentaenoic acid (20:5 n-3) constitutes about 2.7 to 3.0% of total fatty acids;

(iii) docosahexaenoic acid (22:6 n-3) constitutes about 1.3 to 1.4% of total fatty acids; and

(iv) oleic acid (18:1 n-9) constitutes about 44.2 to 46.3% of total fatty acids;

(c) about 180 to about 200 g of carbohydrate;

(d) about 10.6 to about 13.5 g of dietary fiber;

(e) about 88.7 to about 115.3 μg of folic acid;

(f) about 4.9 to about 5.7 mg of β-carotene;

(g) about 84.5 to about 109.8 mg of carnitine; and

(h) about 84.5 to about 109.8 mg of taurine.

5,700,783

METHOD OF TREATING URINARY INCONTINENCE

Angelo Pinto, Via Roma, 44, Casalvelino (Salerno), Italy, assignor to Angelo Pinto, Casalvelino, Italy

Filed Apr. 24, 1995, Ser. No. 429,213

Claims priority, application Italy, Apr. 28, 1994, SA94A0004

Int. Cl.[6] A61K *38/00;35/14;* **A61F** *6/06*

U.S. Cl. 514—21 **3 Claims**

1. A method of treating urinary incontinence comprising injecting a human fibrin glue into the submucosal tissues of the urethra, bladder neck, or both, of a patient in need of such treatment.

5,700,784

EXTERNAL PREPARATION FOR SKIN

Satoshi Shinojima; Masaru Suetsugu; Yoshihiro Morikawa; Yuki Shibata, and Rumiko Kaku, all of Yokohama, Japan, assignors to Shiseido Co., Ltd., Tokyo, Japan

Filed Oct. 24, 1994, Ser. No. 328,066

Claims priority, application Japan, Oct. 26, 1993, 5-289951

Int. Cl.[6] A61K *31/70;31/60;31/62*

U.S. Cl. 514—24 **3 Claims**

1. An external preparation for skin comprising at least one of the glycosides of hydroxysalicylic acid and/or the glycosides of esters of hydroxysalicylic acid represented by the following formula 1;

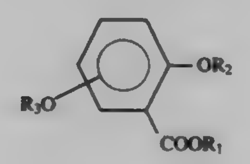

(1)

wherein R_1 represents one selected from the group consisting of a saturated hydrocarbon group and an unsaturated hydrocarbon group which have 1 to 20 carbon atoms and which may be of either a straight-chain or a branched-chain, and one of R_2 and R_3 represents a monosaccharide residue and the other hydrogen.

5,700,785

3'-DEOXY OR 3'-O-SUBSTITUTED-2',5'-OLIGOADENYLATES AS ANTIVIRAL AGENTS

Robert J. Suhadolnik, Roslyn, Pa., and Wolfgang Pfleiderer, Constance, Germany, assignors to Temple University - Of The Commonwealth System of Higher Education, Philadelphia, Pa.

Continuation of Ser. No. 964,111, Oct. 20, 1992, abandoned, which is a continuation of Ser. No. 613,848, Dec. 6, 1990, abandoned, which is a continuation-in-part of Ser. No. 204,659, Jun. 9, 1988, abandoned, which is a continuation-in-part of Ser. No. 144,602, Jan. 11, 1988, Pat. No. 4,859,768, which is a continuation of Ser. No. 629,660, Jul. 11, 1984, abandoned. This application Mar. 14, 1994, Ser. No. 210,406

Int. Cl.[6] A61K *31/70;* **C07H** *21/02*

U.S. Cl. 514—44 **37 Claims**

1. A method of treating a mammal for retroviral infection comprising administering to a mammal in need of such treatment a compound of the formula

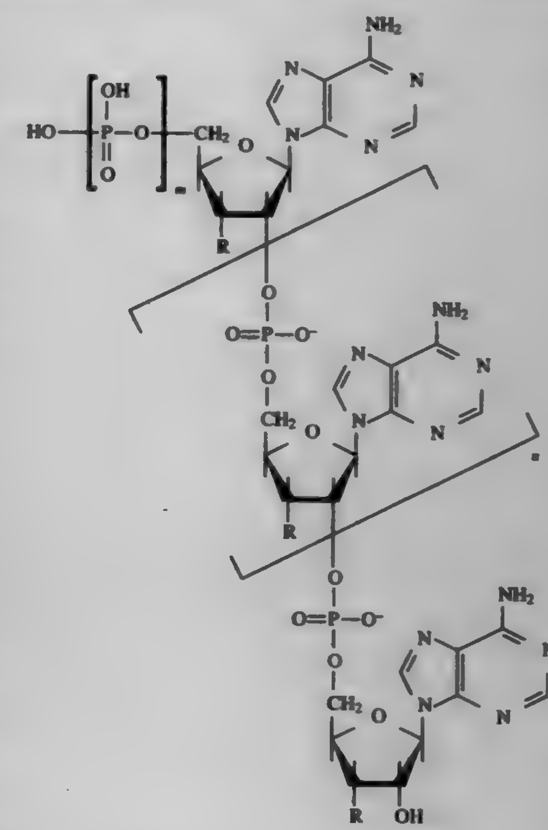

wherein

n is a number from 1 to 8

m is 0, 1, 2, or 3, and

R, same or different, is selected from hydrogen, hydroxy, amino, C_1–C_{10}-alkoxy and $—OSi(CH_3)_2C(CH_3)_3$, provided that all R groups may not be hydroxy in the same compound,

or pharmaceutically acceptable salts thereof.

23. A method of treating a mammal for retroviral infection comprising administering to a mammal in need of such treatment a compound selected from the group of the following compounds, or the 5'mono-, di-, or triphosphates thereof, or a pharmaceutically acceptable salt of any of them:

3'-deoxyadenylyl(2',5')3'-deoxyadenylyl-(2',5')-(R)-3-(2-deoxy-β-erythropentofuranosyl)-3,6,7,8-tetrahydroimidaxo[4,5,-d][1,3]diazepine-8-ol,

adenylyl(2',5')adenylyl(2',5')tubercidin,

tubercidylyl(2',5')tubercidylyl(2',5')tubercidin,

adenylyl(2',5')adenylyl(2',5')9-β-D-arabinofuranosyladenine,

inosinylyl(2',5')inosinylyl(2',5')inosine,

xyloadenylyl(2',5')xyloadenylyl(2',5')xyloadenylyl(2',5')xyloadenosine

erythro-9(2-hydroxy-3-nonyl)adenylyl-(2',5')-adenylyl-(2',5')adenosine,
5,6-dichlorobenzimidazylyl(2',5')5,6-dichlorobenzimidazylyl(2',5')5,6-dichlorobenzimidazole.

36. Erythro-9(2-hydroxy-3-nonyl)adenylyl-(2',5')adenylyl(2',5')adenosine, the 5' mono, di-, or triphosphate thereof, or a pharmaceutically acceptable salt of any of them.

37. 5,6-Dichlorobenzimidazylyl(2',5')5,6-dichlorobenzimidazylyl(2',5')5,6-dichlorobenzimidazole riboside, the 5' mono, di-, or triphosphate thereof, or a pharmaceutically acceptable salt of any of them.

5,700,786

ANALOGUES OF ADENOSINE 5'DIPHOSPHATE AND PHARMACEUTICAL COMPOSITIONS THEREOF

Kyoichi A. Watanabe, Rye-Brook; Krzysztof W. Pankiewicz, Bronxville; Barry M. Goldstein, Rochester, all of N.Y., and J. Ellis Bell, Saint Peters, Minn., assignors to Sloan-Kettering Institute for Cancer Research, New York, and The University of Rochester, Monroe, both of N.Y.

Division of Ser. No. 75,746, Jun. 11, 1993, Pat. No. 5,569,650. This application Jun. 7, 1995, Ser. No. 479,653

Int. Cl.^{6} C07H *19/19;19/20;* **A61K** *31/70*

U.S. Cl. 514—47 **6 Claims**

1. A compound having the structure:

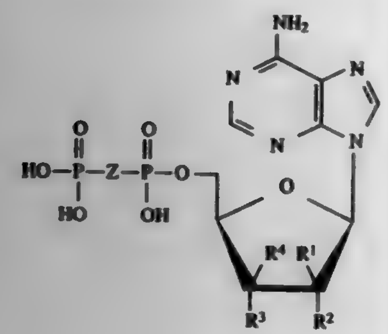

wherein Z is CH_2 or CF_2; and R_1, R_2, R_3 and R_4 are same or different, and are hydrogen, hydroxyl, or fluorine, provided that at least one of R_1, R_2, R_3 and R_4 is fluorine.

3. A compound having the structure:

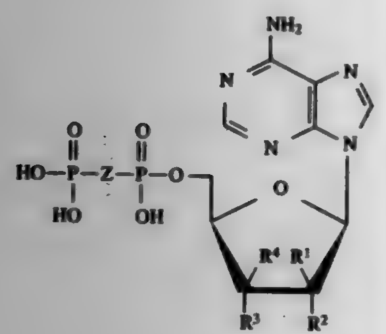

wherein Z is CF_2; and R_1, R_2, R_3 and R_4 are same or different, and are hydrogen, hydroxyl, or fluorine with the proviso that R_2 and R_3 are not simultaneously OH.

5,700,787

CAPSULAR POLYSACCHARIDE IMMUNOMODULATOR

Arthur O. Tzianabos, Reading; Andrew B. Onderdonk, Westwood, and Dennis L. Kasper, Newton Center, all of Mass., assignors to Brigham & Women's Hospital, Inc., Boston, Mass.

Continuation-in-part of Ser. No. 301,271, Sep. 2, 1994. This application Jul. 14, 1995, Ser. No. 502,865

Int. Cl.^{6} A61K *31/715;31/725;31/73;31/735*

U.S. Cl. 514—54 **13 Claims**

1. A method for inducing protection against abscess formation associated with infection comprising: administering to a subject in need of such protection a pharmaceutical preparation containing an effective amount for inducing protection against abscess formation of a polymer of repeating units of a charge motif characteristic of polysaccharide A, the motif being a positively charged free amino moiety and a negatively charged moiety selected from the group consisting of carboxyl, phosphate, phosphonate, sulfate and sulfonate, and wherein the polymer is free from complexation as part of a *B. fragilis* capsular polysaccharide complex.

5,700,788

UREIDO DERIVATIVES OF NAPHTHALENEPHOSPHONIC ACIDS

Nicola Mongelli, Milan; Angelo Crugnola, Varese; Andrea Lombardi Borgia, Paullo, and Enrico Pesenti, Cologno Monzese, all of Italy, assignors to Pharmacia & Upjohn S.p.A., Milan, Italy

PCT No. PCT/EP95/00444, § 371 Date Oct. 30, 1995, § 102(e) Date Oct. 30, 1995, PCT Pub. No. WO95/23806, PCT Pub. Date Sep. 8, 1995

PCT Filed Feb. 8, 1995, Ser. No. 535,056

Claims priority, application United Kingdom, Mar. 1, 1994, 9403909

Int. Cl.^{6} A61K *31/675;* **C07F** *9/572*

U.S. Cl. 514—91 **16 Claims**

1. A compound of formula (I)

(I)

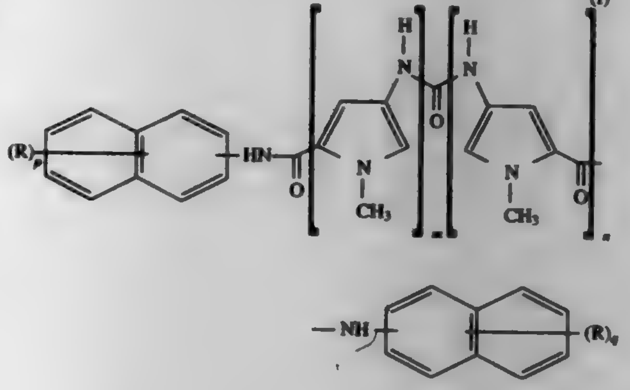

wherein

each of m and n, which are the same, is an integer of 1 to 4; each of p and q, which are the same, is an integer of 1 to 3; and each of the R groups, which are the same, is a free phosphonic acid group, a pharmaceutically acceptable salt thereof, or a C_1–C_6 alkyl or phenyl-C_1–C_6 alkyl ester thereof.

5,700,789

ANTIALLERGIC COMPOSITION COMPRISING A PHOSPHORIC DIESTER COMPOUND

Kazumi Ogata, Toyonaka; Takahiro Sakaue, Itami, and Shogo Sameshima, Moriguchi, all of Japan, assignors to Senju Pharmaceutical Co., Ltd., Osaka, Japan

Filed Jul. 18, 1996, Ser. No. 683,439

Claims priority, application Japan, Jul. 18, 1995, 7-181156

Int. Cl.^{6} A61K *31/665*

U.S. Cl. 514—100 **1 Claim**

1. A method for the treatment of allergic disease which comprises administering to a patient in need thereof an effective amount of a compound of the following formula or a pharmacologically acceptable salt thereof

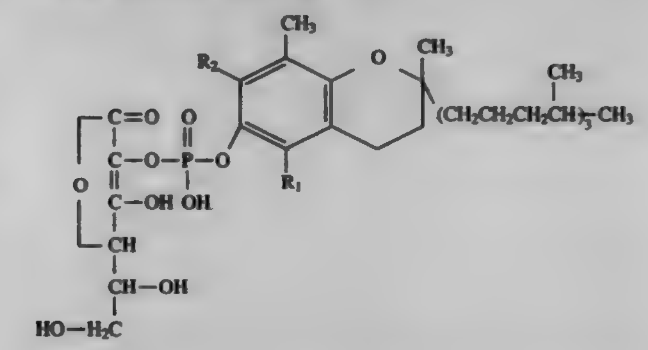

wherein R_1 and R_2 are the same or different and each represents hydrogen or methyl.

5,700,790

PREVENTION AND TREATMENT OF MYOCARDIAL FAILURE

Carl E. Gulbrandsen, Madison, and Richard L. Moss, Middleton, both of Wis., assignors to Bone Care International, Inc., Madison, Wis.

Continuation of Ser. No. 311,934, Sep. 26, 1994, abandoned, which is a continuation of Ser. No. 10,823, Jan. 29, 1993, Pat. No. 5,350,745. This application Jan. 17, 1996, Ser. No. 588,067

Int. Cl.^{6} A61K *31/59*

U.S. Cl. 514—167 **7 Claims**

1. A method for preventing myocardial failure in a mammal in need thereof comprising administering to said mammal an effective amount of a compound of the general structure of Formula

Formula I

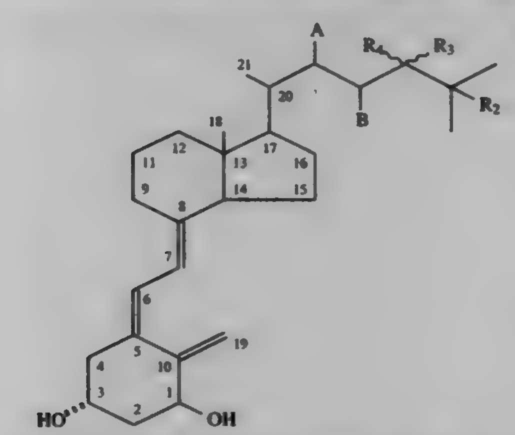

wherein A and B are either hydrogen or a carbon to carbon bond thus forming a double bond between C22 and C23, R_2 and R_3 can be either hydrogen, hydroxy, lower alkyl, O-lower alkyl, O-lower acyl, O-aromatic acyl or flouro, and where R_4 is hydrogen or lower alkyl along with an acceptable excipient.

5,700,791

VITAMIN D DERIVATIVES MODIFIED IN THE 20-POSITION AND PHARMACEUTICAL COMPOSITIONS THEREOF

Andreas Steinmeyer; Gunter Neef; Gerald Kirsch; Katica Schwarz; Ruth Thieroff-Ekerdt; Herbert Wiesinger, and Martin Haberey, all of Berlin, Germany, assignors to Schering Aktiengesellschaft, Berlin, Germany

Division of Ser. No. 80,841, Jun. 24, 1993, Pat. No. 5,585,368. This application Jun. 14, 1996, Ser. No. 664,121

Claims priority, application Germany, Jun. 24, 1992, 42 20 757.6

Int. Cl.^{6} A61K *31/59;* **C07C** *101/00*

U.S. Cl. 514—167 **10 Claims**

1. A vitamin D compound of the formula

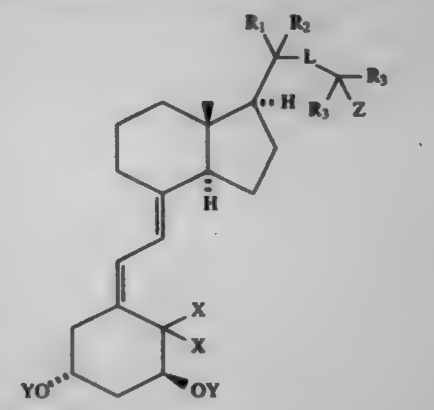

in which

Y means a hydrogen atom, an alkanoyl group of 1 to 9 carbon atoms, or an aroyl group, wherein each Y is chosen independently;

Z means a hydrogen atom, a hydroxyl group or an alkanoyloxy group of 1 to 9 carbon atoms,

X means a hydrogen atom or both X's together mean an exocyclic methylene group,

R_1 and R_2, independent of one another, mean an alkyl group of 1 to 4 carbon atoms,

R_3 means a linear or branched alkyl group of 1 to 5 carbon atoms or a trifluoromethyl group, or the two R_3 groups together with carbon atom 25 form a cyclopropyl or cyclopentyl ring,

L means the grouping

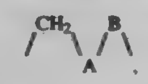

in which

A represents an oxygen atom, and B represents an alkylene group —$(CH_2)_n$—, in which n=1, 2, 3, 4, 5 or 6, or

L means grouping

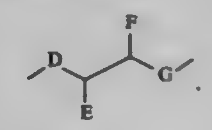

in which

D represents a direct bond, a methylene bridge or a 1,2-ethenediyl bridge (E-double bond) between carbon atoms 20 and 22,

E and F respectively represent a hydrogen atom, or together a second bond (E-double bond), and

G represents a direct bond or an alkylene group —$(CH_2)_n$—, in which n=1, 2, 3, 4, 5 or 6 or a corresponding alkylene group in which a methylene group is replaced by an oxygen atom with the proviso that when the two X's together mean a methylene group, at least one of R_1 and R_2 is not a methyl group.

5,700,792

SPECIFIC EATABLE TASTE MODIFIERS

Robert J. Kurtz, New York, N.Y., and William D. Fuller, San Diego, Calif., assignors to Bioresearch, Inc., Arlington, Va.

Division of Ser. No. 451,063, May 25, 1995, Pat. No. 5,637,618, which is a continuation of Ser. No. 67,537, May 26, 1993, abandoned, which is a continuation-in-part of Ser. No. 799,207, Nov. 27, 1991, abandoned, which is a continuation-in-part of Ser. No. 531,388, Jun. 1, 1990, Pat. No. 5,232,735. This application Jun. 5, 1995, Ser. No. 462,265

Int. Cl.[6] A61K *31/58*

U.S. Cl. 514—171 **14 Claims**

1. A composition comprising an eatable having at least one taste selected from bitter, burning, and metallic, and at least one tastand in a substantially tasteless amount of about 0.0000001 to 300% by weight, based on the weight of the eatable, which amount is sufficient to reduce said at least one bitter, burning and metallic taste, and wherein said tastand is substantially tasteless in the amount used, possesses at least one substituent capable of participating in a hydrogen bond and is selected from the group consisting of steroids except for gymnemic acid.

5,700,793

STEROIDS USEFUL AS ANTI-CANCER AND ANTI-OBESITY AGENTS

Arthur G. Schwartz, Philadelphia, and Marvin Louis Lewbart, Media, both of Pa., assignors to Research Corporation Technologies, Inc., Tucson, Ariz.

Division of Ser. No. 196,606, Feb. 15, 1994, which is a continuation of Ser. No. 912,927, Jul. 13, 1992, abandoned, which is a division of Ser. No. 326,355, Mar. 21, 1989, Pat. No. 5,157,031, which is a continuation of Ser. No. 867,112, May 21, 1986, abandoned, which is a continuation-in-part of Ser. No. 762,584, Aug. 2, 1985, abandoned, which is a continuation-in-part of Ser. No. 519,550, Aug. 2, 1983, abandoned. This application Jun. 7, 1995, Ser. No. 488,354

Int. Cl.[6] C07J *11/00;* **A61K** *31/565*

U.S. Cl. 514—177 **22 Claims**

1. A compound of the formula:

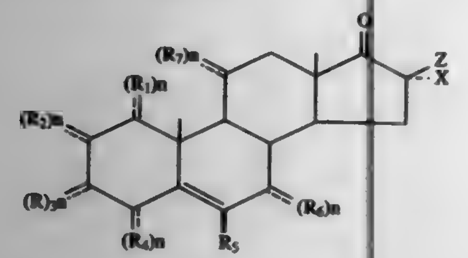

wherein

R_1, R_2, R_4, R_5, R_6 and R_7 are each independently hydrogen or lower alkyl;

R_3 is hydrogen;

X is halogen or hydroxy;

Z is lower alkyl or hydrogen; and

n is 1 or 2.

5,700,794

TREATMENT OF OCULAR HYPOTONY

Abbot F. Clark, Arlington, Tex., assignor to Alcon Laboratories Inc., Fort Worth, Tex.

Continuation of Ser. No. 322,814, Oct. 13, 1994, abandoned. This application Jul. 1, 1996, Ser. No. 674,303

Int. Cl.[6] A61K *31/56*

U.S. Cl. 514—177 **4 Claims**

1. A method for treating ocular hypotony by administering topically to the eye a pharmaceutically effective amount of a mineralocorticoid.

5,700,795

ADMINISTRATION OF PIRENZEPINE, METHYL SCOPOLAMINE AND OTHER MUSCARINIC RECEPTOR ANTAGONISTS FOR TREATMENT OF TYPE II DIABETES

Anthony H. Cincotta, Andover, Mass.; Albert H. Meier, Baton Rouge, La., and John M. Wilson, Charlestown, Mass., assignors to The General Hospital Corporation, Boston, Mass., and The Board of Supervisors of Louisiana State University and Agricultural and Mechanical College, Baton Rouge, La.

Continuation of Ser. No. 263,607, Jun. 20, 1994, which is a continuation-in-part of Ser. No. 995,292, Dec. 22, 1992, Pat. No. 5,585,347, which is a continuation-in-part of Ser. No. 719,745, Jun. 24, 1991, Pat. No. 5,344,832, which is a continuation of Ser. No. 463,327, Jan. 10, 1990, abandoned, which is a continuation-in-part of Ser. No. 192,332, May 10, 1988, abandoned. This application Jun. 1, 1995, Ser. No. 458,005

Int. Cl.[6] A61K *31/545;31/55;31/44;31/35*

U.S. Cl. 514—200 **8 Claims**

1. A method of treating Type II diabetes in a mammalian subject in need of such treatment comprising administering to said subject an amount of a muscarinic receptor antagonist selective for the M1 receptor at a predetermined time during a 24-hour period, said amount and said time being effective to accomplish at least one of: decreasing hyperinsulinemia, decreasing hyperglycemia, and decreasing insulin resistance in said subject.

5,700,796

TRICYCLIC BENZAZEPINE VASOPRESSIN ANTAGONISTS

Jay Donald Albright, Nanuet; Aranapakam M. Venkatesan, New York; John P. Dusza, Nanuet, and Fuk-Wah Sum, Pomona, all of N.Y., assignors to American Cyanamid Company, Madison, N.J.

Continuation-in-part of Ser. No. 373,132, Jan. 17, 1995, Pat. No. 5,536,718. This application Jun. 27, 1996, Ser. No. 671,442

Int. Cl.[6] C07D *487/04;* **A61K** *31/55*

U.S. Cl. 514—220 **18 Claims**

1. The compound {3-Chloro-4-[3-dimethylaminomethyl)-5H,11H-pyrrolo-[2,1-c][1,4]-benzodiazepine-10-carbonyl]-phenyl}-biphenyl-2-carboxylic acid amide or a pharmaceutically acceptable salt, ester or prodrug form thereof.

5,700,797

N-(2,4-DIOXO-2,3,4,5-TETRAHYDRO-1H-1,5-BENZODIAZEPIN-3-YL)-3-AMIDES

David A. Claremon, Maple Glen; Nigel Liverton, Harleysville, and Harold G. Selnick, Ambler, all of Pa., assignors to Merck & Co, Inc., Rahway, N.J.

Filed Jun. 7, 1995, Ser. No. 476,301

Int. Cl.[6] C07D *243/12;* **A61K** *31/55*

U.S. Cl. 514—221 **5 Claims**

1. A compound of the structural formula I

FORMULA I

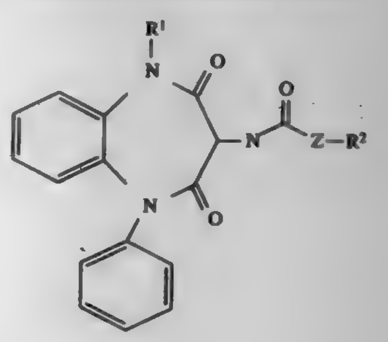

where

R^1 is C_{1-6} alkyl, either straight or branch chain; substituted C_{1-6}alkyl, either straight or branch chain wherein the substituents are selected from F, C_{3-8} cycloalkane, —OH, —CF_3, and

Z is

1) C_{1-6} alkyl, either straight or branched chain,
2) substituted C_{1-6} alkyl, either straight or branched chain, wherein the substituents are selected from F, OH, NO_2,
2) C_{2-4} alkenylene, either straight or branched chain,
3) C_{3-6} cycloalkane,
4) C_{3-6} cycloalkylene, or
5) single bond;

R^2 is

1) C_{5-7} cycloalkyl, either unsubstituted or substituted with one or two substituents selected from
   a) —NO_2, —OH,
   b) —F,
   c) —CF_3,
   d) —C_{1-3} alkyl,
   e) —C_{1-3} alkoxy,
   f) —CN,
   g) -methylenedioxy,

as the racemates, mixtures of enantiomers, individual diastereomers or individual enantiomers, and pharmaceutically acceptable crystal forms, salts, or hydrates thereof.

5,700,798

METHODS FOR USING BENZOXAZINES FOR TREATING ASTHMA

Frederick Jeffrey Brown; Keith Russell, both of Newark, and Paul James Warwick, Jr., Wilmington, all of Del., assignors to Zeneca Limited, London, England

Continuation of Ser. No. 239,637, May 9, 1994, Pat. No. 5,486,515. This application Oct. 10, 1995, Ser. No. 541,782

Claims priority, application United Kingdom, May 12, 1993, 9309716

Int. Cl.[6] A61K *31/535*

U.S. Cl. 514—229.8 **12 Claims**

1. A method of treating asthma comprising administering to a mammal in need of such treatment an effective amount of a compound of formula I:

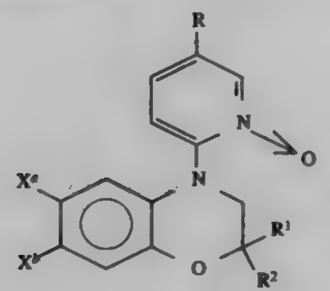

(I)

wherein,

R is hydrogen or trifluoromethyl

R^1 and R^2 are independently selected from (1–3C)alkyl which may be substituted by one or more fluoro groups, provided that at least one of R^1 and R^2 is substituted by at least one fluoro group;

X^a is selected from

(A) cyano, nitro, trifluoromethyl, pentafluoroethyl, trifluoromethoxy, trifluoromethylsulfonyl, methylsulfonyl, halo or trifluoromethylthio, and

(B) a group Y–Z connected to the benzo ring through Z, wherein

Y is a 6-membered aromatic ring or a 6-membered heteroaromatic ring containing 1–2 nitrogens as the heteroatoms and is connected to Z through carbon, and

Z is selected from sulfonyl and carbonyl; and

X^b is selected from hydrogen, halogen, trifluoromethyl, trifluoromethylacetamido and (1–4C)alkoxy; or

X^a and X^b, together with the carbon atoms to which they are attached, form an 1-oxa-2,5-diazole, a 1-thia-2,5-diazole or a 1,2,5-triazole ring; or a pharmaceutically acceptable salt of said compound.

5,700,799

OXAZOLIDINONE ANTIMICROBIALS CONTAINING SUBSTITUTED DIAZINE MOIETIES

Douglas K. Hutchinson; Michael R. Barbachyn, both of Kalamazoo; Steven J. Brickner; Ronald B. Gammill, both of Portage, and Mahesh V. Patel, Kalamazoo, all of Mich., assignors to Pharmacia & Upjohn Company, Kalamazoo, Mich.

Division of Ser. No. 332,822, Oct. 31, 1994, Pat. No. 5,547,950, which is a continuation-in-part of Ser. No. 880,432, May 8, 1992, abandoned. This application Mar. 4, 1996, Ser. No. 610,031

Int. Cl.[6] A61K *31/395;* **C07D** *245/02*

U.S. Cl. 514—235.8 **15 Claims**

1. A compound of structural Formula I:

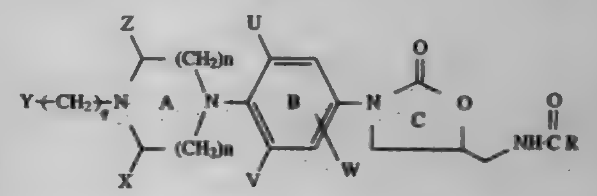

or pharmaceutically acceptable salts thereof wherein:

each n is independently 1 to 3;

Y is a) -hydrogen,

b) —C_{1-6} alkyl, benzyl or -aryl,

c) —OH, —O—C_{1-6} alkyl, —O-vinyl, —O-phenyl, —O—C(O)—C_{1-6} alkyl, —O—C(O)-phenyl, (phenyl can be substituted with one to three F, Cl, —OCH_3, —OH, NH_2 or C_{1-4} alkyl) or —O—C(O)—O—CH_3,

d) —S—C_{1-6} alkyl,

e) —SO_2—C_{1-6} alkyl, phenylsulfonyl, p-toluenesulfonyl, —SO_2—$N(R^3)_2$ (where R^3 is independently hydrogen, C_{1-4} alkyl or phenyl which can be substituted with one to three F, Cl, OCH_3, OH, NH_2, or C_{1-4} alkyl),

f) —C(O)H, —C(O)—C_{1-6} alkyl, —C(O)—O—C_{1-6} alkyl, benzoyl, 2benzyloxyethoxycarbonyl, benzyloxycarbonyl, —C(O)—$N(R^3)_2$, —C(O)—$CH(R^4)N(R^3)_2$, or —C(O)—$CH(R^4)NH$—C(NH)—NH_2 where (R^4 is an amino acid side chain),

g) —$N(R^3)_2$pyridyl,

$$-\overset{\frown}{N(CH_2)_m}$$

(where m is 2–6 and forms a cyclic structure with the nitrogen atom and where one or more carbon atoms can be replaced with S, O or NR^3), or

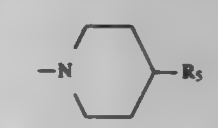

(where R^5 is OH, OCH_3, CH_2OH, CH_2CH_3, CO_2OCH_3 or $C_2C_2H_5$),

h) —$C(CH_3)$=N—OR,

i)

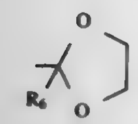

(where R^6 is CH_3 or hydrogen),

j)

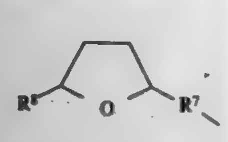

(where R^7 is CH_2 or C(O) and R^8 is —H or =O),

k)

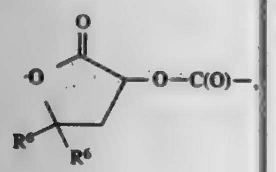

l)

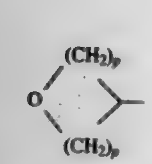

(where p is 1 or 2),

m)

n)

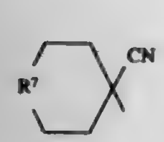

where R^7 is O, S, S(O), SO_2, CH_2, is NH, NCH_3, NC_2H_5, NCHO, $NCOCH_3$ or NCO_2CH_3);

wherein each occurrence of said C_{1-6} alkyl may be substituted with one or more F, Cl, Br, I, OR^1, CO_2R^1, CN, SR^1, or R^1 (where R^1 is a hydrogen or C_{1-4} alkyl);

X and Z are independently C_{1-6} alkyl, C_{3-12} cycloalkyl or hydrogen, or X and Z form a C_{0-3} bridging group;

U, V and W are independently C_{1-6} alkyl, F, Cl, Br, hydrogen or a C_{1-6} alkyl substituted with one or more of F, Cl, Br or I;

R is hydrogen, C_{1-12} alkyl, C_{3-12} cycloalkyl, C_{1-6} alkoxy, C_{1-6} alkyl substituted with one or more F, Cl, Br, I or OH; and

q is 0 to 4 inclusive provided that when n is 1, Y is other than —C(O)—C_{1-6} alkyl, benzoyl, —$N(R^3)_2$ or

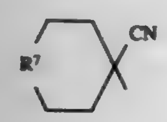

wherein R^7 is O, S, S(O), SO_2 or CH_2).

5,700,800
METHODS FOR THE LONG TERM REDUCTION OF BODY FAT STORES, INSULIN RESISTANCE, HYPERINSULINEMIA AND HYPERGLYCEMIA IN VERTEBRATES WITH A PROLACTIN STIMULATORY COMPOUND

Anthony H. Cincotta, Andover, Mass., and Albert H. Meier, Baton Rouge, La., assignors to Ergo Science Incorporated, Charlestown, Mass., and The Board of Supervisors of Louisiana University and Agricultural and Mechanical College, Baton Rouge, La.

Continuation of Ser. No. 468,528, Jun. 6, 1995, which is a continuation of Ser. No. 249,808, May 26, 1994, Pat. No. 5,554,623, which is a continuation of Ser. No. 719,745, Jun. 24, 1991, Pat. No. 5,344,832, which is a continuation-in-part of Ser. No. 463,327, Jan. 10, 1990, abandoned, which is a continuation-in-part of Ser. No. 192,332, May 10, 1988, abandoned. This application Oct. 31, 1995, Ser. No. 551,064

Int. Cl.[6] A61K *31/495;31/44*

U.S. Cl. 514—250 **8 Claims**

1. A method for treating a metabolic condition selected from the group consisting of insulin resistance, hyperinsulinemia, hyperglycemia, and glucose tolerance in an animal or human subject afflicted with said metabolic condition, the method comprising:

administering to said subject an effective amount of a prolactin stimulatory compound on a timed daily basis.

5,700,801
PIPERAZINE DERIVATIVES, PHARMACEUTICAL COMPOSITIONS CONTAINING THESE COMPOUNDS, THEIR USE AND PROCESSES FOR PREPARING THEM

Helmut Pieper; Volkhard Austel, both of Biberach; Frank Himmelsbach; Günter Linz, both of Mittelbiberach; Brian Guth, Warthausen, and Johannes Weisenberger, Biberach, all of Germany, assignors to Karl Thomae, GmbH, Biberach An Der Riss, Germany

Filed Dec. 13, 1995, Ser. No. 572,256

Claims priority, application Germany, Dec. 23, 1994, 44 46 300.6; Sep. 8, 1995, 195 33 224.5

Int. Cl.[6] C07D *213/74;401/12;211/18;* **A61K** *31/495*

U.S. Cl. 514—252 **11 Claims**

1. A piperazine derivative of the formula

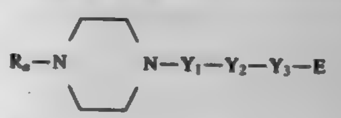

(I)

wherein

R_a denotes a pyridyl group,

Y_1 denotes a —CO—, —CO—CO—, —A_1—CO—, —C—A_1—, —SO_2—A_2—, —A_2—SO_2—, —CO—A_1—CO—, —CO—NR_1—CO—, —CO—NR_1—A_2—, —CO—NR_1 —A_2—CO— or —CO—A_2—NR_1—CO— group, wherein

R_1 denotes a hydrogen atom, a C_{1-5}-alkyl-, aryl- or aryl-C_{1-3}-alkyl group,

A_1 denotes an n-C_{1-5}-alkylene group optionally substituted by a C_{1-5}-alkyl-, cyclohexyl-C_{1-3}-alkyl-, aryl- or aryl-C_{1-3}-alkyl group or an R_1O=— group, provided that this is not in the a-position to a nitrogen atom, and

A_2 denotes an n-C_{1-4}-alkylene group optionally substituted by a C_{1-5}-alkyl, aryl or aryl-C_{1-3}-alkyl group,

Y_2 denotes an —NR_1—B— group, the link to the Y_1 group being effected via the nitrogen atom of the —NR_1— group, wherein

R_1 is as hereinbefore defined and

B denotes a phenylene or cyclohexylene group,

Y_3 denotes a —CO—, —A_2—CO—, —CH_2—$CH(NHR_2)$—CO—, —NR_2—A_3—CO—, —O—A_3—CO— or —CO—A_3—CO— group, wherein

R_1 and A_2 are as hereinbefore defined,

A_3 denotes an n-C_{1-3}-alkylene group optionally substituted by a C_{1-5}-alkyl, aryl or aryl-C_{1-3}-alkyl group and

R_2 denotes a hydrogen atom, a C_{1-5}-alkyl, aryl-C_{1-3}-alkyl, aryl, C_{1-5}-alkoxycarbonyl, C_{1-5}-alkanoyl, C_{1-5}-alkylsulphonyl, aryl-C_{1-3} -alkylsulphonyl or arylsulphonyl group, a formyl group optionally substituted by an aryl- or aryl-C_{1-3}-alkyl group, and the —A_2—CO— group is linked to the group Y_2 via the group A_2, the —NR_2—A_3—CO— group is linked to the group Y_2 via the —NR_2— group and the —O—A_3—CO— group is linked to the group Y_2 via the oxygen atom, but an —NR_2— or —O—A_3—CO— group cannot be linked to a nitrogen atom of the group Y_2,

and E denotes a hydroxy group, a C_{1-6}-alkoxy group, a phenylalkoxy group wherein the alkoxy moiety may contain 1 to 3 carbon atoms, a C_{3-9}-cycloalkoxy group, wherein the C_{5-8}-cycloalkyl moiety may additionally be substituted by one or two C_{1-3} -alkyl groups, a C_{5-8}-cycloalkoxy group wherein a methylene group in the 3- or 4-position of the cycloalkyl moiety is replaced by an oxygen atom or by an imino group optionally substituted by an alkyl, phenylalkyl or phenylalkoxycarbonyl group, wherein the alkyl and alkoxy moieties may each contain 1 to 3 carbon atoms, or by a C_{2-6}-alkanoyl group, and the cycloalkyl moiety may additionally be substituted by one or two C_{1-3}-alkyl groups, a cycloalkenyloxy group wherein the cycloalkenyl moiety may contain 4 to 7 carbon atoms, an alkenyloxy, phenylalkenyloxy, alkynyloxy or phenylalkynyloxy group, with the proviso that no bond to the oxygen atom starts from a carbon atom carrying a double or triple bond, and wherein the alkenyl and alkynyl moieties may each contain 3 to 5 carbon atoms, a cycloalkylalkoxy group, wherein the cycloalkyl moiety may contain 3 to 8 carbon atoms and the alkoxy moiety may contain 1 to 3 carbon atoms, a bicycloalkoxy group having a total of 8 to 10 carbon atoms which may additionally be substituted in the bicycloalkyl moiety by one or two C_{1-3}-alkyl groups, a 1,3-dihydro-3-oxo-1 -isobenzofuranyloxy group or an R_5—CO—O—(R_3CR_4)—O— group, wherein

R_3 denotes a hydrogen atom, a C_{1-6}-alkyl, C_{3-7}-cycloalkyl or phenyl group,

R_4 denotes a hydrogen atom or a C_{1-6}-alkyl group and

R_5 denotes a C_{1-5}-alkyl, C_{1-5}-alkoxy, C_{5-7}-cycloalkyl or C_{5-7}-cycloalkoxy group,

or E denotes an a-amino group of a natural amino acid and the esters thereof, whilst by the terms "an aryl group", "a phenyl group" or "a phenylene group" mentioned in the definitions of the above groups, is meant a phenyl or phenylene group optionally mono-, di- or trisubstituted by fluorine, chlorine, bromine or iodine atoms, or by alkyl, trifluoromethyl, nitro, amino, alkylamino, dialkylamino, alkanoylamino, hydroxy, alkoxy, carboxy, alkoxycarbonyl, hydroxycarbonylalkoxy, alkoxycarbonylalkoxy, aminocarbonyl, alkylaminocarbonyl or dialkylaminocarbonyl groups, wherein the substituents may be identical or different and the above-mentioned alkyl and alkoxy moieties may each contain 1 to 3 carbon atoms, and by the esters of a natural a-amino group are meant the C_{1-6}-alkyl, C_{2-6}-alkenyl, C_{5-7} -cycloalkyl, phenyl or phenyl-C_{1-3}-alkylesters, or a tautomer or pharmaceutically acceptable salt thereof.

5,700,802
FUROPYRIDINE DERIVATIVES

Neil Roy Curtis, Puckeridge; Janusz Jozef Kulagowski, Bishops Stortford, both of England, and Paul David Leeson, Monmouth Junction, N.J., assignors to Merck Sharp & Dohme, Ltd., Hoddesdon, England

Filed Oct. 9, 1996, Ser. No. 727,897

Claims priority, application United Kingdom, Oct. 10, 1995, 9520731

Int. Cl.[6] A61K *31/495;* **C07D** *405/14*

U.S. Cl. 514—253 **13 Claims**

1. A compound of formula I, or a salt or prodrug thereof:

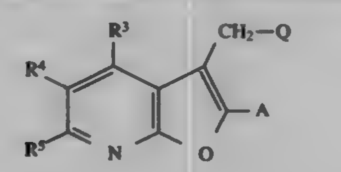

(I)

wherein

A represents hydrogen, C_{1-6} alkyl, C_{1-6} alkoxy, halogen, cyano or trifluoromethyl;

represents a moiety of formula Qa, Qb, Qc or Qd:

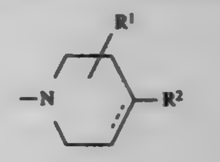

(Qa)

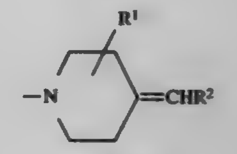

(Qb)

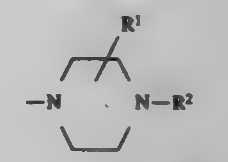

(Qc)

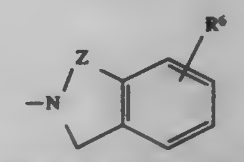

(Qd)

in which the broken line represents an optional chemical bond;

R^1 represents hydrogen, halogen, or an optionally substituted C_{1-6} alkyl, C_{1-6} alkoxy, C_{2-6} alkenyl, C_{2-6} alkynyl, aryl, aryl(C_{1-6})alkyl, aryl(C_{1-6})alkoxy, aryl(C_{2-6})alkenyl, aryl(C_{2-6})alkynyl, C_{3-7} heterocycloalkyl(C_{1-6})alkyl, heteroaryl, heteroaryl(C_{1-6})alkyl, heteroaryl(C_{2-6})alkenyl or heteroaryl(C_{2-6})alkynyl group;

R^2 represents an optionally substituted C_{1-6} alkyl, C_{1-6} alkoxy, C_{2-6} alkenyl, C_{2-6} alkynyl, aryl, aryl(C_{1-6})alkyl, aryloxy(C_{1-6})alkyl, aryl(C_{1-6})alkoxy, aryl(C_{2-6})alkenyl, aryl(C_{2-6})alkynyl, C_{3-7} heterocycloalkyl(C_{1-6})alkyl, heteroaryl, heteroaryl(C_{1-6})alkyl, heteroaryl(C_{2-6})alkenyl or heteroaryl(C_{2-6})alkynyl group;

R^3, R^4 and R^5 independently represent hydrogen, hydrocarbon, a heterocyclic group, halogen, cyano, trifluoromethyl, nitro, —OR^a, —SR^a, —SOR^a, —SO_2R^a, —$SO_2NR^aR^b$, —NR^aR^b, —NR^aCOR^b, —$NR^aCO_2R^b$, —COR^a, —CO_2R^a or —$CONR^aR^b$;

Z represents —CH_2— or —CH_2CH_2—;

R^6 represents hydrogen or halogen, or an optionally substituted C_{1-6} alkyl, C_{1-6} alkoxy, aryl, aryloxy, aryl(C_{1-6})alkyl, aryl(C_{1-6})alkoxy or heteroaryl group; and

R^a and R^b independently represent hydrogen, hydrocarbon or a heterocyclic group.

5,700,803
METHOD FOR REDUCING INFARCT SIZE IN SUBJECTS AFFLICTED WITH ISCHEMIC HEART DISEASE

Masafumi Kitakaze, Osaka, Japan, assignor to Otsuka Pharmaceutical Co., Ltd., Tokyo, Japan

Filed Dec. 12, 1995, Ser. No. 570,767

Int. Cl.[6] A61K *31/495*

U.S. Cl. 514—254 **2 Claims**

1. A method for reducing infarct size in a subject afflicted with ischemic heart disease, comprising administering to said subject to a pharmaceutically effective amount of a carbostyril derivative represented by the following general formula (1), or a pharmaceutically acceptable salt thereof:

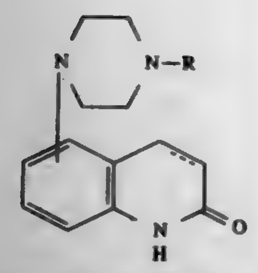

(1)

wherein R is a benzoyl group which may optionally have lower alkoxy groups on the phenyl ring as substituents and the carbon-carbon bond in the 3 and 4 positions of the carbostyril skeleton is a single bond or double bond.

5,700,804

PHARMACEUTICAL COMPOUNDS

Mark Anthony David Collins; Maria Ines Chicarelli-Robinson; Justin Stephen Bryans, all of Berkshire, United Kingdom; Stephen James Brocchini, Highland Park, N.J.; Christopher John Latham, and John Richardson Shaw, both of Berkshire, United Kingdom, assignors to Xenova Limited, United Kingdom

PCT No. PCT/GB93/01734, § 371 Date Apr. 11, 1995, § 102(e) Date Apr. 11, 1995, PCT Pub. No. WO94/04512, PCT Pub. Date Mar. 3, 1994

PCT Filed Aug. 16, 1993, Ser. No. 381,932

Claims priority, application United Kingdom, Aug. 14, 1992, 9217331

Int. Cl.⁶ A61K *31/495;* **C07D** *241/08*

U.S. Cl. 514—255 **4 Claims**

1. A compound selected from the group consisting of a diketopiperazine of formula (A):

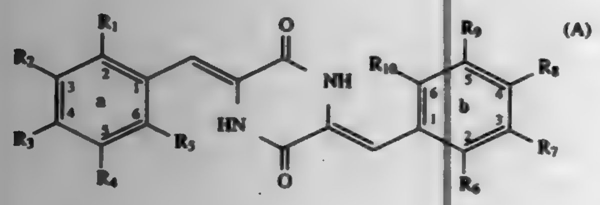

(A)

wherein R_8 is NHAc wherein Ac is acetyl; R_1 is H or halogen; R_2 is H; R_3 is halogen, C_1–C_6 alkoxy, —$N(R^{11}R^{12})$ or —$NHCOOR^{13}$; and each of R^{11} and R^{12} is independently H or C_1–C_6 alkyl and R^{13} is C_1–C_6 alkyl; R_1 is H; R_5 is halogen or CF_3; R_6, R_7, R_8 and R_{10} are H; and the pharmaceutically acceptable salts thereof.

2. A compound selected from the group consisting of a diketopiperazine of formula (A):

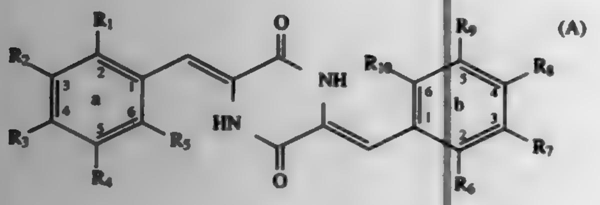

(A)

wherein R_1, R_6, R_7, R_8, R_9 and R_{10} are H; R_2 is H and R_3 is —CH_2SR^{11}, —CH_2SCOR^{11}, —$NHCO(CH_2)_nCO_2R^{11}$, —$O(CH_2)_nCO_2R^{11}$, —$O(CH_2)_nN(R^{11}R^{12})$, or R_2 is —CH_2SCOR^{13} or —CH_2SR^{11} and each of R^{11} and R^{12} is independently H or C_1–C_6 alkyl and R^{13} is C_1–C_6 alkyl; and R_3 is H; and R_4 and R_5 are both H or form, together with the carbon atoms to which they are attached, a benzene ring; and the pharmaceutically acceptable salts thereof.

5,700,805

SUBSTITUTED 1-AMINO-3-PHENYLURACILS

Peter Schäfer, Ottersheim; Ralf Klintz, Gruenstadt; Gerhard Hamprecht, Weinheim; Elisabeth Heistracher, Ludwigshafen; Karl-Otto Westphalen, Speyer; Matthias Gerber, Limburgerhof, and Helmut Walter, Obrigheim, all of Germany, assignors to BASF Aktiengesellschaft, Ludwigshafen, Germany

PCT No. PCT/EP94/02821, § 371 Date Feb. 15, 1996, § 102(e) Date Feb. 15, 1996, PCT Pub. No. WO95/06641, PCT Pub. Date Mar. 9, 1995

PCT Filed Aug. 25, 1994, Ser. No. 596,215

Claims priority, application Germany, Sep. 2, 1993, 43 29 537.1

Int. Cl.⁶ A01N *43/54;* **C07D** *239/54;239/56*

U.S. Cl. 514—269 **6 Claims**

1. A substituted 1-amino-3-phenyluracil of the formula I

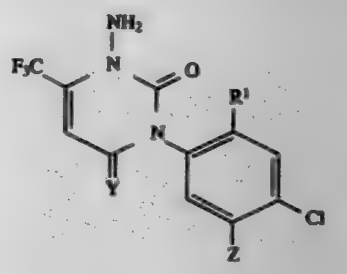

I

where the variables have the following meanings:

R^1 is hydrogen, fluorine or chlorine;

Y is oxygen or sulfur;

Z is —CH=N—OH, —CH=N—O—(C_1–C_6-alkyl),
—CH=N—O—(C_1–C_6-alkylene)—O —(C_1–C_6-alkyl),
—CH=N—O—CH_2—COOH, —CH=N—O—CH(C_1–C_6-alkyl)—COOH,
—CH=N—O—CH_2—CO—O—(C_1–C_6-alkyl),
—CH=N—O—CH (C_1–C_6-alkyl)—CO—O—(C_1–C_6-alkyl),
—CH=N—O—CH_2—CO—O—(C_1–C_6-alkylene)—O—(C_1–C_6-alky),
—CH=N—O—CH (C_1–C_6-alkyl)—CO—O—(C_1–C_6-alkylene)—O—(C_1–C_6-alkyl),
—CH[X^1-(C_1–C_6-alkyl)] [X^2-(C_1–C_6-alkyl)] or a radical

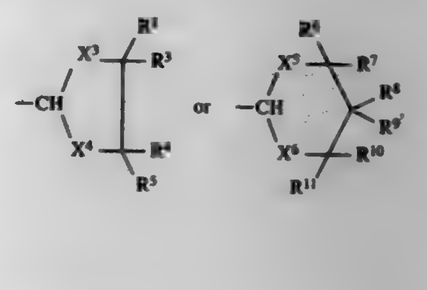

where

X^1–X^6 in each case are oxygen or sulfur and

R^2–R^{11} in each case are hydrogen, C_1–C_4-alkyl, vinyl or C_1–C_4alkoxycarbonyl.

5,700,806

TRICYCLIC AMIDE AND UREA COMPOUNDS USEFUL FOR INHIBITION OF G-PROTEIN FUNCTION AND FOR TREATMENT OF PROLIFERATIVE DISEASES

Ronald J. Doll, Maplewood, and F. George Njoroge, Union, both of N.J., assignors to Schering Corporation, Kenilworth, N.J.

Filed Mar. 24, 1995, Ser. No. 410,443

Int. Cl.⁶ C07D *401/14;401/06;* **A61K** *31/445*

U.S. Cl. 514—290 **10 Claims**

1. A compound of the formula:

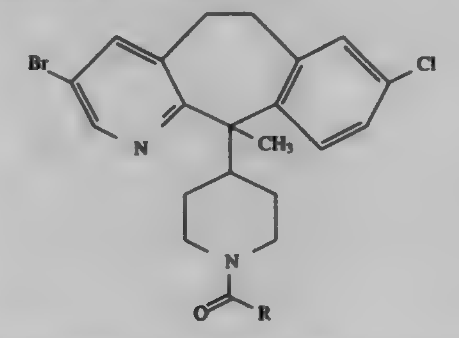

or a pharmaceutically acceptable salt or solvate thereof, wherein:

R represents

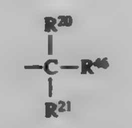

wherein:

R^{20} and R^{21} are independently selected from H or alkyl; and

R^{46} is selected from pyridyl or pyridyl N-oxide.

5,700,807

ENDOTHELIN RECEPTOR ANTAGONISTS

Mathias Osswald, Swingenberg; Dieter Dorsch, Ober-Ramstadt; Werner Mederski, Erzhausen; Claudia Wilm, Mühltal; Claus J. Schmitges, Darmstadt, and Maria Christadler, Rodërmark, all of Germany, assignors to Merck Patent Gesellschaft mit Beschrankter Haftung, Darmstadt, Germany

Filed Jul. 26, 1996, Ser. No. 687,922

Claims priority, application Germany, Jul. 28, 1995, 195 27 568.3

Int. Cl.⁶ C07D *491/048;513/04;* **A61K** *31/395*

U.S. Cl. 514—291 **16 Claims**

1. A compound of the formula I

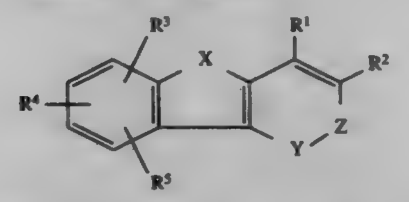

I

in which

—Y—Z— is —NR^7—CO—, —N=C(OR^7)— or —N=CR^8—,

R^1 is Ar,

R^2 is —$COOR^6$, —CN, 1H-tetrazol-5-yl or —$CONHSO_2Ar$,

R^3, R^4 and R^5 in each case independently of one another are R^6, OR^6, $S(O)_mR^6$, Hal, NO_2, $NR^6R^{6'}$, $NHCOR^6$, $NHSO_2R^6$, $OCOR^6$, $COOR^6$ or CN,

R^6 and $R^{6'}$ in each case independently of one another are H, alkyl having 1 to 6 C atoms, benzyl or phenyl,

R^7 is $(CH_2)_nAr$,

R^8 is Ar or OAr,

Ar are in each case independently phenyl which is unsubstituted or mono-, di- or trisubstituted by R^9, R^{10} or R^{11}, or unsubstituted naphthyl or

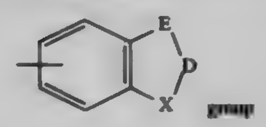

group

which is unsubstituted or mono- or disubstituted in the phenyl moiety by R^9 or R^{10} or a

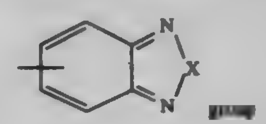

group

which is unsubstituted or mono- or disubstituted in the cyclohexadienyl moiety by R^9 or R^{10},

R^9, R^{10} and R^{11} in each case independently of one another are R^6, OR^6, Hal, CF_3, OCF_3, $OCHF_2$, OCH_2F, NO_2, $NR^6R^{6'}$, $NHCOR^6$, CN, $NHSO_2R^6$, $COOR^6$, COR^6, $CONHSO_2Ar$, $O(CH_2)_nR^2$, $O(CH_2)_nOR^6$ or $S(O)_mR^6$,

E is CH_2, S or O,

D is carbonyl or $[C(R^6R^{6'})]_n$,

Hal is F, Cl, Br or I,

X is O or S,

m is 0, 1 or 2,

n is 1 or 2,

or a physiologically acceptable salt thereof.

5,700,808

5- OR 6-SUBSTITUTED β-CARBOLINE-3-CARBOXYLIC ACID ESTERS

Helmut Biere; Andreas Huth; Dieter Rahtz; Ralph Schmiechen; Dieter Seidelmann; Wolfgang Kehr; Herbert Hans Schneider, all of Berlin, Germany; Mogens Engelstoft, Vaerloese, Denmark; Bondo John Hansen, Lyngby, Denmark; Frank Waetjen, Bajsvaerd, Denmark, and Tage Honoré, Maaloev, Denmark, assignors to Schering Aktiengesellschaft, Berlin, Germany

Division of Ser. No. 416,629, Oct. 3, 1989, Pat. No. 5,414,002, which is a continuation of Ser. No. 3,179, Jan. 14, 1987, which is a continuation of Ser. No. 933,435, Nov. 21, 1986, abandoned. This application May 18, 1994, Ser. No. 245,278

Claims priority, application Germany, Mar. 2, 1986, 36 09 699.7

Int. Cl.⁶ A61K *31/44;* **C07D** *471/04*

U.S. Cl. 514—292 **9 Claims**

1. A method of treating a sleep disturbance, comprising administering an effective amount of a compound of the formula

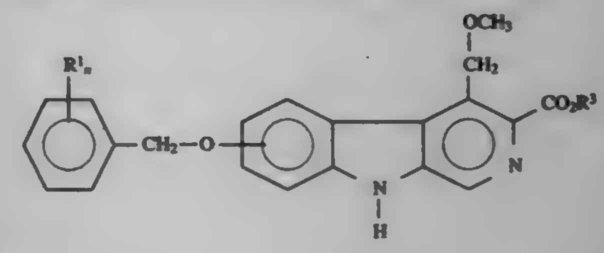

wherein

R^1_n is halogen, lower alkyl, or lower alkoxy,

R^3 is branched C_{3-6}-alkyl, branched C_{3-6}-alkyl substituted by halogen, C_{3-6} cycloalkyl, or C_{3-6}-cycloalkyl substituted by methyl,

n is 0–5

and the R^1 benzyloxy group is in the 5- or 6-position.

5,700,809

PYRROLO-PYRIDINE DERIVATIVES

Paul David Leeson, Cambridge; Adrian Leonard Smith, Bishops Stortford; Mark Peter Ridgill, Watton-At-Stone; Raymond Baker, Green Tye; Neil Roy Curtis, Puckeridge, and Janusz Josef Kulagowski, Bishops Stortford, all of Great Britain, assignors to Merck Sharp & Dohme, Ltd., Hoddesdon, England

PCT No. PCT/GB94/00384, § 371 Date Aug. 29, 1995, § 102(e) Date Aug. 29, 1995, PCT Pub. No. WO94/20459, PCT Pub. Date Sep. 15, 1994

PCT Filed Feb. 25, 1994, Ser. No. 513,828

Claims priority, application United Kingdom, Mar. 1, 1993, 9304110; Aug. 5, 1993, 9316260

Int. Cl.[6] C07D *410/14;109/14;217/24;* A61K *31/54*

U.S. Cl. 514—300 9 Claims

1. A compound of formula I, or a pharmaceutically acceptable salt thereof:

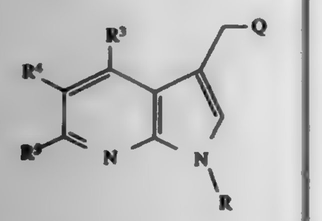

(I)

wherein

R represents hydrogen or C_{1-6} alkyl;

Q represents a moiety of formula Qa, Qb or Qc:

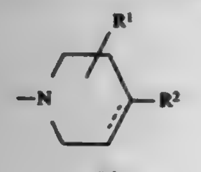

(Qa)

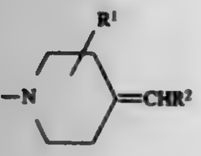

(Qb)

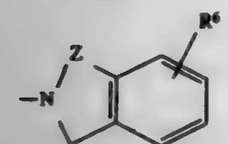

(Qc)

in which the broken line represents an optional chemical bond;

R^1 represents hydrogen, or an unsubstituted or substituted C_{1-6} alkyl, C_{1-6} alkoxy, C_{2-6} alkenyl, C_{2-6} alkynyl, aryl, aryl(C_{1-6})alkyl, aryl(C_{1-6})alkoxy, aryl(C_{2-6})alkenyl, aryl(C_{2-6})alkynyl, C_{3-7} heterocycloalkyl(C_{1-6})alkyl, heteroaryl, heteroaryl(C_{1-6})alkyl, heteroaryl(C_{2-6})alkenyl or heteroaryl(C_{2-6})alkynyl group; wherein aryl is selected from the group consisting of: phenyl and naphthyl; heterocycloalkyl is selected from the group consisting of: azetidinyl, pyrrolidyl, piperidyl, piperazinyl, morpholinyl and tetrahydrofuryl; heteroaryl is selected from the group consisting of: pyridyl, quinolyl, isoquinolyl, pyridazinyl, pyrimidinyl, pyrazinyl, pyranyl, furyl, benzofuryl, dibenzofuryl, thienyl, benzthienyl, indolyl, indazolyl, imidazolyl, benzimidazolyl, oxadiazolyl and thiadiazolyl; wherein the substituents are selected from the group consisting of: C_{1-6} alkyl, adamantyl, phenyl, aryl(C_{1-6})alkyl, halogen, C_{1-6} haloalkyl, C_{1-6} aminoalkyl, trifluoromethyl, hydroxy, C_{1-6} alkoxy, aryloxy, keto, C_{1-3} alkylenedioxy, nitro, cyano, carboxy, C_{2-6} alkoxycarbonyl, C_{1-6})alkyl, C_{2-6} alkylcarbonyloxy, arylcarbonyloxy, C_{2-6} alkylcarbonyl, arylcarbonyl, C_{1-6} alkylthio, C_{1-6} alkylsulphinyl, C_{1-6} alkylsulphonyl, arylsulphonyl, trifluoromethanesulphonyloxy, —NR^vR^w, —NR^vCOR^w, —$NR^vCO_2R^w$, —$NR^vSO_2R^w$, —$CH_2NR^vSO_2R^w$, —$NHCONR^vR^w$, —$PO(OR^v)(OR^w)$, —$CONR^vR^w$, —$SO_2NR^vR^w$ and —$CH_2SO_2NR^vR^w$, in which R^v and R^w independently represent hydrogen, C_{1-6} alkyl, aryl or aryl(C_{1-6})alkyl;

R^2 represents an unsubstituted or substituted C_{1-6} alkoxy, C_{2-6} alkenyl, C_{2-6} alkynyl, aryl, aryl(C_{1-6})alkyl, aryloxy(C_{1-6})alkyl, aryl(C_{1-6})alkoxy, aryl(C_{2-6})alkenyl, aryl(C_{2-6})alkynyl, C_{3-7} heterocycloalkyl(C_{1-6})alkyl, heteroaryl, heteroaryl(C_{1-6})alkyl, heteroaryl(C_{2-6})alkenyl or heteroaryl(C_{2-6})alkynyl group, wherein aryl, heteroaryl, heterocycloalkyl and the substituents are defined above;

R^3, R^4 and R^5 independently represent hydrogen, hydrocarbon, selected from the group consisting of: C_{1-6} alkyl, C_{2-6} alkenyl, C_{2-6} alkynyl, C_{3-7} cycloalkyl, C_{3-7} cycloalkyl(C_{1-6})alkyl, aryl, aryl(C_{1-6})alkyl, aryl(C_{2-6})alkenyl and aryl(C_{2-6})alkynyl; a heterocyclic group, selected from the group consisting of: C_{3-7} heterocycloalkyl, C_{3-7} heterocycloalkyl(C_{1-6})alkyl, heteroaryl, heteroaryl(C_{1-6})alkyl, heteroaryl(C_{2-6})alkenyl and heteroaryl(C_{2-6})alkynyl groups; halogen, cyano, trifluoromethyl, nitro, —OR^a, —SR^a, —SOR^a, —SO_2R^a, —$SO_2NR^aR^b$, —NR^aR^b, —NR^aCOR^b, —$NR^aCO_2R^b$, —COR^a, —CO_2R^a or —$CONR^aR^b$;

Z represents —CH_2— or —CH_2CH_2—;

R^6 represents hydrogen or halogen, or an unsubstituted or substituted C_{1-6} alkyl, C_{1-6} alkoxy, aryl, aryloxy, aryl(C_{1-6})alkyl, aryl(C_{1-6})alkoxy or heteroaryl group; wherein aryl, heteroaryl, heterocycloalkyl and the substituents are defined above; and

R^a and R^b independently represent hydrogen, hydrocarbon, as defined above, or a heterocyclic group as defined above.

5,700,810

CONDENSED HETEROCYCLIC COMPOUNDS, THEIR PRODUCTION AND USE

Hideaki Natsugari, Ashiya; Hitoshi Ikeda, Higashiosaka; Takenori Ishimaru, Toyonaka, and Takayuki Doi, Izumi, all of Japan, assignors to Takeda Chemical Industries, Ltd., Osaka, Japan

Division of Ser. No. 114,841, Sep. 2, 1993, Pat. No. 5,482,967. This application Oct. 11, 1995, Ser. No. 540,913

Claims priority, application Japan, Sep. 4, 1992, 4-237481; Apr. 28, 1993, 5-103328

Int. Cl.[6] C07D *215/14;217/04;* A61K *31/47*

U.S. Cl. 514—307 52 Claims

1. A compound represented by the general formula:

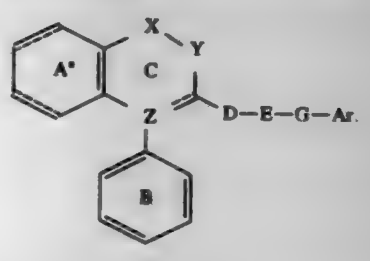

wherein ring A" and ring B independently represent an optionally substituted benzene ring;

either X or Y represents —NR^1— (R^1 represents a hydrogen atom, an optionally substituted hydrocarbon group, an optionally substituted hydroxyl group or an optionally substituted amino group), the other representing —CO—, —CS— or —$C(R^2)R^{2a}$— (R^2 and R^{2a} independently represent a hydrogen atom or an optionally substituted hydrocarbon group), or either X or Y represents —N=, the other representing =CR^3— (R^3 represents a hydrogen atom, a halogen atom, an optionally substituted hydrocarbon group, an optionally substituted amino group, a substituted hydroxyl group or a mercapto group substituted by an optionally substituted hydrocarbon group);

.... represent a single or double bond;

(i) when .... adjacent to Z is a single bond, Z represents

$$—\underset{|}{C}R^4—$$

(R^4 represents a hydrogen atom, hydroxyl group or an optionally substituted hydrocarbon group), or

(ii) when .... adjacent to Z is a double bond, Z represents a carbon atom;

D represents a C_{1-3}alkylene group which may be substituted by an oxo group or a thioxo group, or D and Y, taken together, may form a 5- to 7- membered ring which may be substituted by an oxo group or a thioxo group;

E represents —NR^5— (R^5 represents a hydrogen atom or an optionally substituted hydrocarbon group), —O— or —S(O)n— (n is 0,1 or 2), or R^5 and Y, taken together, may form a 5- to 7- membered ring which may be substituted by an oxo group or a thioxo group;

G represents a bond or a C_{1-3}alkylene group;

Ar represents an optionally substituted aryl group, provided that (1) when —X—Y— represents —NH—CO—, D represents —CO—.

5,700,811

POTENT INDUCERS OF TERMINAL DIFFERENTIATION AND METHOD OF USE THEREOF

Ronald Breslow, Englewood, N.J.; Paul A. Marks, Washington, Conn., and Richard A. Rifkind, New York, N.Y., assignors to Sloan-Kettering Institute for Cancer Research, New York, N.Y.

Continuation-in-part of Ser. No. 771,760, Oct. 4, 1991, Pat. No. 5,369,108. This application May 19, 1994, Ser. No. 246,363

Int. Cl.[6] H01N *43/90;43/42;* C07C *233/00;* C07D *277/04*

U.S. Cl. 514—314 18 Claims

1. A compound having the structure:

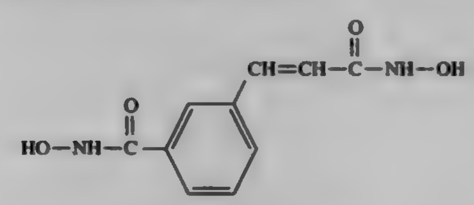

or a pharmaceutically acceptable salt thereof.

5,700,812

(+)-α-(2,3-DIMETHOXYPHENYL)-1-[2-(4-FLUOROPHENYL)ETHYL]-4-PIPERIDINEMETHANOL

Albert A. Carr; John M. Kane, and David A. Hay, all of Cincinnati, Ohio, assignors to Merrell Pharmaceuticals Inc., Cincinnati, Ohio

Division of Ser. No. 372,694, Jan. 13, 1995, Pat. No. 5,561,144, which is a continuation of Ser. No. 115,000, Aug. 31, 1993, abandoned, which is a continuation of Ser. No. 31,065, Mar. 12, 1993, abandoned, which is a continuation of Ser. No. 880,612, May 8, 1992, abandoned, which is a division of Ser. No. 736,194, Jul. 26, 1991, Pat. No. 5,134,149, which is a continuation-in-part of Ser. No. 531,954, Jun. 1, 1990, abandoned. This application Jun. 7, 1995, Ser. No. 485,701

Int. Cl.[6] A61K *31/445;* C07D *211/22*

U.S. Cl. 514—317 1 Claim

1. A method for the treatment of coronary vasospasms comprising administering to a patient in need thereof, an anti-spasmodic amount of (+)-α-(2,3-dimethoxyphenyl)-1-[2-(4-fluorophenyl)ethyl]-4-piperidinemethanol, or a pharmaceutically acceptable salt thereof.

5,700,813

(+)-α-(2,3-DIMETHOXYPHENYL)-1-[2-(4-FLUOROPHENYL)ETHYL]-4-PIPERIDINEMETHANOL

Albert A. Carr; John M. Kane, and David A. Hay, all of Cincinnati, Ohio, assignors to Merrell Pharmaceuticals Inc., Cincinnati, Ohio

Division of Ser. No. 372,694, Jan. 13, 1995, Pat. No. 5,561,144, which is a continuation of Ser. No. 115,000, Aug. 31, 1993, abandoned, which is a continuation of Ser. No. 31,065, Mar. 12, 1993, abandoned, which is a continuation of Ser. No. 880,612, May 8, 1992, abandoned, which is a division of Ser. No. 736,194, Jul. 26, 1991, Pat. No. 5,134,149, which is a continuation-in-part of Ser. No. 531,954, Jun. 1, 1990, abandoned. This application Jun. 7, 1995, Ser. No. 485,700

Int. Cl.[6] A06K *31/445;* C07D *211/22*

U.S. Cl. 514—317 1 Claim

1. A method for the treatment of thrombotic illness comprising administering to a patient in need thereof, an antithrombotic amount of (+)-α-(2,3-dimethoxyphenyl)-1-[2-(4-fluorophenyl)ethyl] -4-piperidinemethanol, or a pharmaceutically acceptable salt thereof.

5,700,814

SABELUZOLE ORAL SUSPENSIONS

Marc Karel Jozef François, Kalmthout, and Christine Frieda Augusta Agemans, Oelegem, both of Belgium, assignors to Janssen Pharmaceutica, N.V., Beerse, Belgium

PCT No. PCT/EP95/03966, § 371 Date Mar. 27, 1997, § 102(e) Date Mar. 27, 1997, PCT Pub. No. WO96/11687, PCT Pub. Date Apr. 25, 1996

PCT Filed Oct. 6, 1995, Ser. No. 809,827

Claims priority, application European Pat. Off., Oct. 14, 1994, 94202986

Int. Cl.[6] A61K *31/445*

U.S. Cl. 514—321 22 Claims

1. An aqueous suspension for oral administration comprising sabeluzole and a pharmaceutically acceptable carrier, having a pH in the range from 8 to 10.

5,700,815

METHODS OF INCREASING THROMBOMODULIN EXPRESSION

David S. Calnek, and Brian W. Grinnell, both of Indianapolis, Ind., assignors to Eli Lilly and Company, Indianapolis, Ind.

Continuation of Ser. No. 170,944, Dec. 21, 1993, Pat. No. 5,476,862. This application Aug. 21, 1995, Ser. No. 517,517

Int. Cl.[6] A61K *31/445;31/40*

U.S. Cl. 514—324 5 Claims

1. A method of inhibiting a thrombotic disorder or event comprising administering to a human in need an effective amount of a compound of the formula

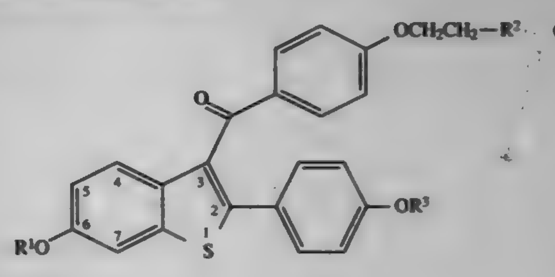

(I)

wherein

R^1 and R^3 are independently hydrogen,

$$—CH_3,\ —\overset{O}{\overset{\|}{C}}—(C_1\text{–}C_6\ \text{alkyl}),\ \text{or}\ —\overset{O}{\overset{\|}{C}}—Ar,$$

wherein

Ar is optionally substituted phenyl;

R^2 is selected from the group consisting of pyrrolidino, hexamethylenemino, and piperidino; or a pharmaceutically acceptable salt of solvate thereof.

5,700,816

TREATMENT OF INFLAMMATION AND INFLAMMATION-RELATED DISORDERS WITH A COMBINATION OF A CYCLOOXYGENASE-2 INHIBITOR AND A LEUKOTRIENE A_4 HYDROLASE INHIBITOR

Peter C. Isakson, 2292 Ridgley Woods Dr., Clarkson Valley, Mo. 63005; Gary D. Anderson, 1886 Woodhollow Dr. #203, Maryland Heights, Mo. 63043, and Susan A. Gregory, 4400 Lindell Blvd., #20A, St. Louis, Mo. 63108

Filed Jun. 12, 1995, Ser. No. 489,468

Int. Cl.[6] **A61K** *31/445;31/40;31/38;31/20;31/18;31/415;31/195, 31/135*

U.S. Cl. 514—326 **21 Claims**

1. A pharmaceutical composition comprising a therapeutically-effective amount of a cyclooxygenase-2 inhibitor selected from N-2-cyclohexyloxy-4-nitrophenyl)methanesulfonamide, meloxicam, flosulide and compounds of Formula I

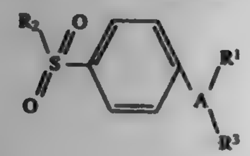

I

wherein

A is a 5- or 6-member ring substituent selected from partially unsaturated or unsaturated heterocyclo and carbocyclic rings;

wherein

R^1 is at least one substituent selected from heterocyclo, cycloalkyl, cycloalkenyl and aryl, wherein R^1 is optionally substituted at a substitutable position with one or more radicals selected from alkyl, haloalkyl, cyano, carboxyl, alkoxycarbonyl, hydroxyl, hydroxyalkyl, haloalkoxy, amino, alkylamino, arylamino, nitro, alkoxyalkyl, alkylsulfinyl, halo, alkoxy and alkylthio;

wherein

R^2 is selected from alkyl, and amino; and

wherein

R^3 is a radical selected from halo, alkyl, alkenyl, alkynyl, oxo, cyano, carboxyl, cyanoalkyl, heterocyclooxy, alkyloxy, alkylthio, alkylcarbonyl, cycloalkyl, aryl, haloalkyl, heterocyclo, cycloalkenyl, aralkyl, heterocycloalkyl, acyl, alkylthioalkyl, hydroxyalkyl, alkoxycarbonyl, arylcarbonyl, aralkylcarbonyl, aralkenyl, alkoxyalkyl, arylthioalkyl, aryloxyalkyl, aralkylthioalkyl, aralkoxyalkyl, alkoxyaralkoxyalkyl, alkoxycarbonylalkyl, aminocarbonyl, aminocarbonylalkyl, alkylaminocarbonyl, N-arylaminocarbonyl, N-alkyl-N-arylaminocarbonyl, alkylaminocarbonylalkyl, carboxyalkyl, alkylamino, N-arylamino, N-aralkylamino, N-alkyl-N-aralkylamino, N-alkyl-N-arylamino, aminoalkyl, alkylaminoalkyl, N-arylaminoalkyl, N-aralkylaminoalkyl, N-alkyl-N-aralkylaminoalkyl, N-alkyl-N-arylaminoalkyl, aryloxy, aralkoxy, arylthio, aralkylthio, alkylsulfinyl, alkylsulfonyl, aminosulfonyl, alkylaminosulfonyl, N-arylaminosulfonyl, arylsulfonyl, N-alkyl-N-arylaminosulfonyl; or a pharmaceutically-acceptable salt thereof;

and a leukotriene A_4 hydrolase inhibitor selected from compounds of Formula II

$$Ar^1—Q—Ar^2—Y—R—Z \qquad (II)$$

or a pharmaceutically-acceptable salt thereof, and a pharmaceutically-acceptable carrier,

wherein

Ar^1 is an aryl moiety selected from:

(i) phenyl, mono-, di-, or tri-substituted phenyl with the substituents selected from Cl, Br, F, CF_3, lower alkyl, lower alkoxy, NH_2, NO_2 and OH;

(ii) 2-, 4- or 5-thiazolyl,

(iii) 2-, 3- or 4-pyridinyl,

(iv) 2- or 3-thienyl, and

(v) 2- or 3-furyl;

wherein

Ar^2 is an aryl moiety selected from:

(i) 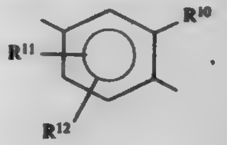

(ii) 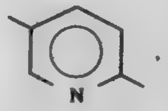

(iii) 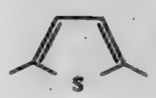 , and

(iv) 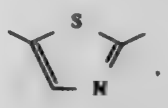

wherein

Q is selected from:

(i) —O—,

(ii) —CH_2—,

(iii) —OCH_2—,

(iv) —CH_2O—,

(v) —NH—;

(vi) —$NHCH_2$—,

(vii) —CH_2NH—,

(viii) —CF_2—,

(ix) —CH═CH—,

(x) —CH_2CH_2—, and

(xi) carbon-carbon single bond;

wherein

Y is selected from:

(i) —O—,

(ii) —S—,

(iii) —NH—,

(iv) —S(O)—, and

(v) —S(O_2)—;

wherein

R is selected from:

(i) linear or branched C_2–C_6 alkylenyl; and

(ii) —C(R^{13}) (R^{14})—$(CH_2)_m$—;

wherein

Z is selected from:

(i) 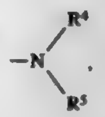 (ii) 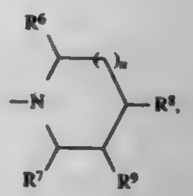

(iii) 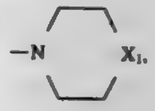 (iv) 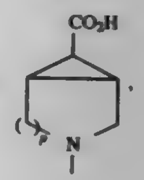

-continued

(v) 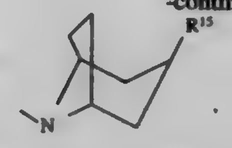

(vi) 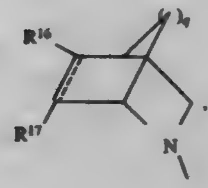 , and

(viii) a monocyclic or bicyclic heteroaromatic moiety having at least one heteroatom, wherein the heteroatom is nitrogen, and wherein the monocyclic heteroaromatic moiety comprises a 5- or 6-membered ring and the bicyclic heteroaromatic moiety comprises a fused 9- or 10-membered ring;

wherein

R^4 and R^5 are independently selected from:

(i) H,

(ii) lower alkyl or allyl,

(iii) benzyl,

(iv) —$(CH_2)_a COR^{18}$,

(v) 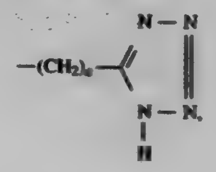

and

(v)

(vi) —$(CH_2)_a$—OH;

wherein

R^6 and R^7 are independently H or lower alkyl;

wherein

R^8 and R^9 are independently selected from

(i) H

(ii) —OH, =O or —$(CH_2)_a$—OH,

(iii) —$(CH_2)_a COR^{18}$

(iv) —$(CH_2)_a CONH(CH_2)_b CO_2R^{19}$,

(v) —NHR^{20},

(vi) 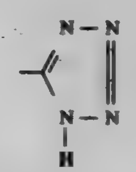

(vii) 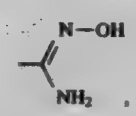 ,

(viii) 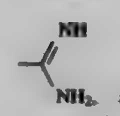 and

(ix) 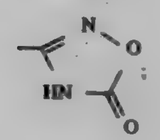 ;

wherein

R^{10} is H, halogen, lower alkyl, lower alkoxy, nitro, or hydroxy, or R^{10} taken together with R^{13} is an alkylenyl group having one or two carbon atoms;

wherein

R^{11} and R^{12} are independently H, halogen, lower alkyl, lower alkoxy, NH_2, NO_2 or OH;

wherein

R^{13} is H, or lower alkyl, or R^{13} taken together with R^{10} is an alkylenyl group having one or two carbon atoms;

wherein

R^{14} is H or lower alkyl;

wherein

R^{15} is selected from

(i) H,

(ii) —OH or =O,

(iii) —$(CH_2)_a COR^{18}$

(iv) —$(CH_2)_a CONH\ (CH_2)_b CO_2R^{19}$, and

(iv) —NHR^{20};

wherein

R^{16} and R^{17} are independently hydrogen, or —$(CH_2)_a COR^{18}$, provided that at least one of R^{16} and R^{17} is hydrogen;

wherein

R^{18} is —OR^{19}, —NHR^{19} or —$NHNH_2$;

wherein

R^{19} is H, lower alkyl or benzyl;

wherein

R^{20} is H, lower alkyl, benzyl, —COR^{19} or —$CONH_2$;

wherein

X^1 is

—S—, or —O—, wherein R^{21} is H, lower alkyl, —$CONH_2$, —$CSNH_2$, —$COCH_3$ or —SO_2CH_3;

wherein

a and b are independently integers of from 0 to 5;

wherein

m is 1, 2 or 3;

wherein

n is 0, 1, 2 or 3;

wherein

p is 1 or 2; and

wherein

q is 1, 2 or 3;

provided however that where R is —C(R^{13})(R^{14})—$CH_2)_m$—, and R^{13} taken together with R^{10} forms an alkylenyl group having one or two carbon atoms, then —Ar^2—Y—R— is

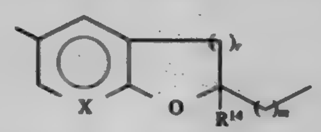

wherein

X is —CH— or —N—; and wherein r is 1 or 2; further provided that wherein Z is

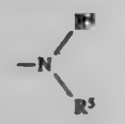

and either R^4 or R^5, or both R^4 and R^5 are —$(CH_2)_a COR^{18}$, then a is not 0.

5,700,817

CYCLIC LIPID DERIVATIVES AS POTENT PAF ANTAGONISTS

Soon Hyung Woo; Sung Kee Chung; Soo Ho Ban; Byoung Eog Kim, and Si Hwan Kim, all of Pohang, Rep. of Korea, assignors to Pohang Iron & Steel Co., Ltd., and Research Institute of Industrial Science & Technology, both of Kyong Sang Book-Do, Rep. of Korea

Continuation of Ser. No. 193,163, Feb. 10, 1994, abandoned. This application Nov. 6, 1995, Ser. No. 553,843
Claims priority, application Rep. of Korea, Apr. 7, 1993, 93-5778
Int. Cl.[6] A61K *31/44;* C07D *401/12*
U.S. Cl. 514—340 8 Claims

1. A compound of the formula I or pharmaceutically acceptable salts thereof:

I

in which

Y represents a divalent group selected from the class consisting of S, SO, SO_2, CH_2, and NR^a group wherein R^a is hydrogen, lower alkyl, lower alkoxycarbonyl, phenyl, naphthyl, phenylalkyl, naphthylalkyl or alkylacyl;

R^1 represents either an alkyl, alkenyl or alkynyl group, of 10 to 24 carbon atoms or a $CONR^3R^4$ group, wherein R^3 is hydrogen or lower alkyl and R^4 is an alkyl, alkenyl or alkynyl group, of 10 to 24 carbon atoms;

R^2 represents a group having formula T—$(CH_2)_n$—V, wherein T refers to a simple covalent linkage, or a CO, PO_3, C(O)), or $CONR^b$ group wherein R^b is hydrogen, lower alkyl or acyl;

n refers to an integer of from 1 to 10;

V represents

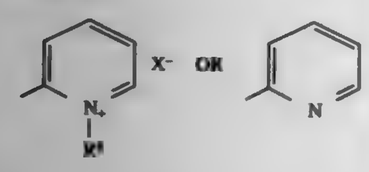

wherein

R^8 represents lower alkyl group; and

X^- represents a pharmaceutically acceptable anion such as halide (chloride, bromide, or iodide), lower alkyl sulfonate, arylsulfonate, carboxylate, nitrate or phosphate.

5,700,818

DIHYDROBENZOFURANYL-BIPHENYL CARBOXAMIDES HAVING $5HT_{1D}$ ANTAGONISTIC ACTIVITY

Laramie Mary Gaster, Bishops Stortford, United Kingdom, assignor to SmithKline Beecham p.l.c., Brentford, England

PCT No. PCT/EP94/04180, § 371 Date Jun. 20, 1996, § 102(e) Date Jun. 20, 1996, PCT Pub. No. WO95/17401, PCT Pub. Date Jun. 29, 1995
PCT Filed Dec. 16, 1994, Ser. No. 663,290
Claims priority, application United Kingdom, Dec. 21, 1993, 9326008
Int. Cl.[6] A61K *31/41*
U.S. Cl. 514—364 9 Claims

1. A compound of formula (I) or a salt thereof:

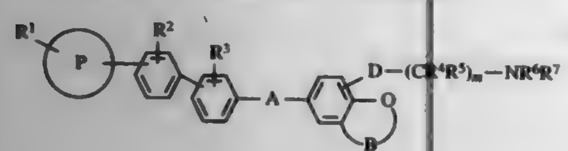

(I)

in which

P is 1,2,4-oxadiazole

R^1, R^2 and R^3 are independently hydrogen, halogen, C_{1-6}alkyl, C_{3-6}cycloalkyl, C_{3-6}cycloalkenyl, C_{1-6}alkoxy, acyl, aryl, acyloxy, hydroxy, nitro, trifluoromethyl, cyano, CO_2R^8, $CONR^9R^{10}$, NR^9R^{10} where R^8, R^9 and R^{10} are independently hydrogen or C_{1-6}alkyl;

R^4 and R^5 are independently hydrogen or C_{1-6}alkyl;

R^6 and R^7 are independently hydrogen or C_{1-6}alkyl,

A is CONH or HNCO;

B is —$(CR^{11}R^{12})$p— where R^{11} and R^{12} are independently hydrogen or C_{1-6}alkyl and p is 2;

m is 1 to4; and

D is oxygen, $S(O)_n$ where n is 0, 1 or 2, or D is NR^{10} where R^{10} is hydrogen or C_{1-6}alkyl, or D is CR^4═CR^5 or CR^4R^5 where R^4 and R^5 are independently hydrogen or C_{1-6}alkyl.

5,700,819

2-SUBSTITUTED BENZOTHIAZOLE DERIVATIVES AND PROPHYLACTIC AND THERAPEUTIC AGENTS FOR THE TREATMENT OF DIABETIC COMPLICATIONS

Tomoji Aotsuka; Naoki Abe, and Naoki Ashizawa, all of Hamura, Japan, assignors to Grelan Pharmaceutical Co., Ltd., Tokyo, Japan

Filed Nov. 22, 1995, Ser. No. 562,061
Claims priority, application Japan, Nov. 29, 1994, 6-317809
Int. Cl.[6] A61K *31/425;* C07D *277/64*
U.S. Cl. 514—367 14 Claims

1. A benzothiazole derivative compound of the formula (1):

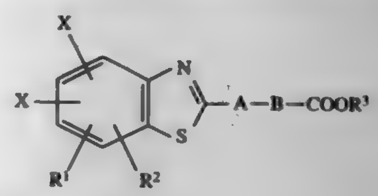

(1)

wherein:

X is halogen,

R^1 and R^2 which are the same or different are each independently hydrogen of halogen,

A is a methylene group, and

—B—$COOR^3$ is a group represented by the following formula (2):

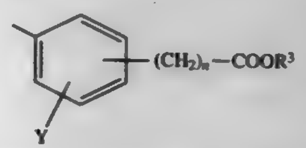

(2)

wherein R^3 is hydrogen or a C1 to C3 lower alkyl, Y is hydrogen, halogen, C1 to C3 lower alkyl, carboxyl or dilower alkylamino and n is an integer of 1 to 3; or —B—$COOR^3$ is a group represented by the following formula (3):

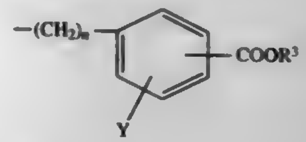

(3)

wherein R3 is hydrogen or a C1 to C3 lower alkyl, Y is hydrogen, halogen, C1 to C3 lower alkyl, carboxyl or dilower alkylamino and n is an integer of 1 to 3;

or a pharmaceutically acceptable salt thereof.

5,700,820

POLYMORPHIC FORMS OF TROGLITAZONE HAVING ENHANCED ANTI-DIABETIC ACTIVITY AND A PROCESS FOR THEIR PREPARATION

Krishnamurthi Vyas; Chebiyyam Prabhakar; Sreenivas Dharmaraja Rao; Mamillapalli Ramabadhra Sarma; Om Gaddam Reddy; Rajagopalan Ramanujam, and Ranjan Chakrabarti, all of Andhra Pradesh, India, assignors to Dr. Reddy's Research Foundation, Hyderabad, India

Filed Jun. 19, 1996, Ser. No. 665,867
Claims priority, application India, Feb. 20, 1996, 276/MAS/96
Int. Cl.[6] C07D *417/12;* A61K *31/425*
U.S. Cl. 514—369 21 Claims

1. A polymorphic form 1 of Troglitazone having the formula

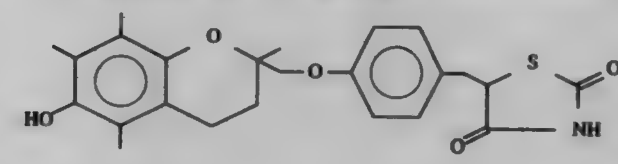

characterized by the data:

DSC: Endotherm at 179.3° C. (onset at 169.3° C.);

X-ray powder diffraction (2θ): 5.56, 11.10, 11.66, 15.72, 16.62, 17.62, 18.24, 19.70, 21.20, 21.42, 23.40, 23.70; and

Infrared absorption bands (cm^{-1}): 3442(w), 3218(w), 2921(w), 1748(m), 1686(s), 1610(w), 1582(w), 1513(s), 1454(w), 1420(w), 1382(w), 1302(m), 1244(s), 1169(m), 1118(w), 1086(w), 1048(m), 931(w), 863(w), 827(w), 798(w), 720(w), 509(w) wherein

w=weak, m=medium, and s=strong.

5,700,821

PHOSPHATASE INHIBITORS AND METHODS OF USE THEREOF

John S. Lazo, Pittsburgh; Robert L. Rice, Glenshaw; April Cunningham, Harleysville, and Peter Wipf, Pittsburgh, all of Pa., assignors to University of Pittsburgh, Pittsburgh, Pa.

Filed Jul. 30, 1996, Ser. No. 688,530
Int. Cl.[6] A61K *31/42;* C07D *263/32*
U.S. Cl. 514—374 4 Claims

1. A compound having the formula:

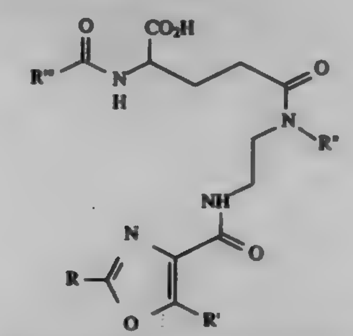

I

wherein R, R', R" and R'" are each independently H, alkyl, alkenyl, alkynyl, cycloalkyl, phenyl, oxetanyl, azetidinyl, furanyl, pyrrole, indolyl, oxazolyl, isoxazolyl, imidazolyl, pyrazolyl, triazolyl, tetrazolyl, pyranyl, pyridyl, pyridonyl, piperidyl, piperazinyl, quinolyl, azepinyl, and diazepinyl.

5,700,822

TREATMENT OF PLATELET DERIVED GROWTH FACTOR RELATED DISORDERS SUCH AS CANCERS

Klaus Peter Hirth, San Francisco; Donna Prasss Schwartz, San Mateo; Elaina Mann, Alameda; Laura Kay Shawver, San Francisco, all of Calif.; Gyorgi Keri, Modori, Hungary; Istvan Szekely, Krajcar, Hungary; Tamas Bajor, Almos, Hungary; Janis Haimichael, Regaves, Hungary; Laszlo Orfi, Batthyany, Hungary; Alex Levitzki; Aviv Gazit, both of Jerusalem, Israel; Axel Ullrich; Reiner Lammers, both of Munich, Germany; Fairooz F. Kabbinavar; Dennis Slamon, both of Woodland Hills, Calif., and Peng Cho Tang, Moraga, Calif., assignors to The Regents of the University of California, Oakland, Calif.

Continuation of Ser. No. 370,574, Jan. 6, 1995, which is a continuation-in-part of Ser. No. 179,570, Jan. 7, 1994. This application Jun. 1, 1995, Ser. No. 457,047
Int. Cl.[6] A61K *31/42*
U.S. Cl. 514—380 24 Claims

1. A method of treating a patient suffering from a solid tumor characterized by inappropriate PDGF-R activity, comprising the step of administering to said patient a therapeutically effective amount of a compound selected from the group consisting of:

a) a Group 1 compound having the chemical structure:

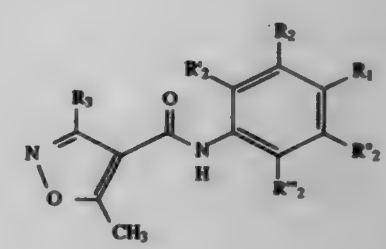

wherein R_1, R_2, R'_2, R''_2, and R'''_2 are independently selected from the group consisting of hydrogen, halogen, trihalomethyl, and NO_2; and R_3 is selected from the group consisting of hydrogen, carboxy, and carbalkoxy, and

b) a Group 2 compound having the chemical structure

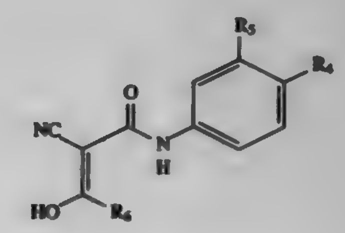

wherein R_4 and R_5 are each independently halogen, hydrogen, trihalomethyl, or NO_2; and R_6 is either aryl, alkyl, alkenyl, or alkynyl; or a pharmaceutically acceptable salt of said compound;

wherein said compound inhibits one or more PDGF-R activities in vivo or in vitro;

wherein said patient is a human and said solid tumor is a cancer selected from the group consisting of intra-axial brain cancer, ovarian cancer, colon cancer, prostate cancer, lung cancer, Kaposi's sarcoma, and melanoma.

5,700,823

TREATMENT OF PLATELET DERIVED GROWTH FACTOR RELATED DISORDERS SUCH AS CANCERS

Klaus Peter Hirth, San Francisco; Donna Pruess Schwartz, San Mateo; Elaina Mann, Alameda; Laura Kay Shawver, San Francisco, all of Calif.; György Kéri, Budapest, Hungary; István Székely, Dunakeszi, Hungary; Tamás Bajor, Budapest, Hungary; Janis Haimichael, Budapest, Hungary; László Orfi, Budapest, Hungary; Alex Levitzki; Aviv Gazit, both of Jerusalem, Israel; Axel Ullrich, and Reiner Lammers, both of München, Germany, assignors to Sugen, Inc., Redwood City, Calif.; Biosignal L.T.D., Budapest, Hungary; Yissum Research Development Company, Hebrew University of Jerusalem, Jerusalem, Israel, and Max-Planck-Gesellschaft zur Forderung der Wissenschaften E.V., Munich, Germany

Filed Jan. 7, 1994, Ser. No. 179,570
Int. Cl.⁶ A61K *31/42;31/175*
U.S. Cl. 514—380 **23 Claims**

1. A method of treating a patient suffering from a carcinoma cancer characterized by inappropriate PDGF-R activity, comprising the step of administering to said patient a therapeutically effective amount of a composition comprising a compound selected from the group consisting of:

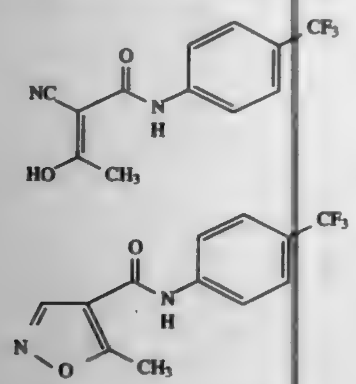

and pharmaceutically acceptable salts thereof.

5,700,824

TRIAZOLE DERIVATIVES, INSECTICIDE, ACARICIDE AND METHODS THEREOF

Atsuhiko Ikeda; Masami Ozaki; Reijiro Honami; Takashi Yumita, all of Iwata-gun; Hiroyuki Yano, Ogasa-gun; Yuki Nakano, Ogasa-gun; Yutaka Kurihara, Ogasa-gun, and Tadayoshi Hirano, Kakegawa, all of Japan, assignors to Kumiai Chemical Industrial Co. Ltd., and Ihara Chemical Industry Co. Ltd., both of Tokyo, Japan

Division of Ser. No. 338,446, Jan. 18, 1994, Pat. No. 5,616,914. This application Nov. 6, 1996, Ser. No. 740,980
Claims priority, application Japan, Apr. 16, 1993, 5-113802
Int. Cl.⁶ A61K *31/41;* **C07D** *249/08*
U.S. Cl. 514—383 **5 Claims**

1. A triazole derivative represented by the following formula:

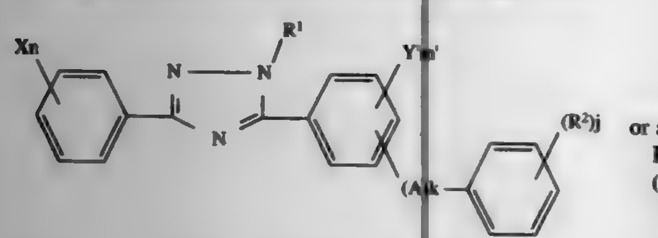

wherein R^1 is an alkyl (C1–C6) group, X is a hydrogen atom, a halogen atom, an alkyl (C1–C6) group, an alkoxy (C1–C6) group, an alkylthio (C1–C6) group, a nitro group or a cyano group, n is an integer of 1–5 provided that when n is 2 or more, X is the same or a different combination, Y' is a halogen atom, an alkyl (C1–C6) group, an alkoxy (C1–C6) group, a haloalkyl (C1–C6) group, a haloalkoxy (C1–C6) group, m' is an integer of 1–4 provided that when m' is 2 or more, Y' is the same or a different combination, A is an oxygen atom, a sulfur atom, an alkylene (C1–C4) group, an alkyleneoxy (C1–C4) group, an oxyalkylene (C1–C4) group, an alkyleneoxy (C1–C4) alkylene (C1–C4) group, an alkylenethio (C1–C4) group, a thioalkylene (C1–C4) group, a vinylene group or an ethylene group, k is 0 or 1, R^2 is a hydrogen atom, a halogen atom, an alkyl (C1–C6) group, an alkoxy (C1–C6) group, a trifluoromethyl group or a trifluoromethoxy group, j is an integer of 1–5 provided that when j is 2 or more, R^2 is the same or a different combination.

5,700,825

RADIOSENSITIZING DIAMINES AND THEIR PHARMACEUTICAL PREPARATIONS

Kurt G. Hofer, and Li-xi Yang, both of Tallahassee, Fla., assignors to Florida State University, Tallahassee, Fla.

Filed Mar. 31, 1995, Ser. No. 414,272
Int. Cl.⁶ A61K *31/415;* **C07D** *233/95;233/91*
U.S. Cl. 514—397 **33 Claims**

1. A compound having the formula

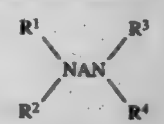

(1)

wherein A comprises a carbon chain having from about 4–10 carbons in the chain, R^1, R^2, R^3, and R^4 are

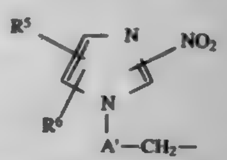

(2)

wherein A' comprises a carbon chain having from about 1–8 carbons in the chain, R^5 is H, lower alkyl, or halo, and R^6 is H, lower alkyl, halo or nitro, or a salt of said compound.

5,700,826

1,2,4,5-TETRA SUBSTITUTED IMIDAZOLES AS MODULATORS OF MULTI-DRUG RESISTANCE

Adnan Mjalli, Vista, and Sepehr Sarshar, Cardiff by the Sea, both of Calif., assignors to Ontogen Corporation, Carlsbad, Calif.

Filed Jun. 7, 1995, Ser. No. 481,118
Int. Cl.⁶ A01K *31/415;* **C07D** *233/04;233/61;233/56*
U.S. Cl. 514—397 **39 Claims**

1. A compound of the formula 1

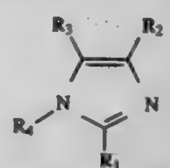

Formula 1

or a pharmaceutically acceptable salt thereof wherein;

R_1 is selected from a group consisting of:

(a) substituted C_{1-11} alkyl or substituted C_{2-11} alkenyl, wherein the substituent is selected from the group consisting of hydroxy, C_{1-6} alkyloxy, or

(b) mono-, di-,and tri-substituted aryl-C_{0-11} n alkyl, wherein aryl is selected from the group consisting of phenyl, furyl, thienyl, the substituents are selected from the group consisting of:

(d) phenyl, trans-2-phenylethenyl, 2-phenylethynyl, 2-phenylethyl, or in which the said phenyl group is mono- or disubstituted with a member selected from the group consisting of hydroxy, halo, C_{1-4} alkyl and alkyloxy.

(g) substituted C_{1-6} alkyl, substituted C_{2-6} alkyloxy, substituted C_{2-6}alkylthio, substituted substituted C_{2-6}alkylcarbonyl, wherein the substituent is selected from the group consisting of C_{1-6} alkoxy, C_{1-6}alkylthio,

(h) C_{1-11} CO_2R_5, $C_{1-11}CONHR_5$, trans- $CH{=}CHCO_2R_5$, or trans-$CH{=}CHCONHR_5$ wherein R_5 is C_{1-11} alkyl, or phenyl C_{1-11} alkyl,

(j) C_{1-6} alkoxycarbonylmethyleneoxy;

R^2 and R_3 are each independently selected from the group consisting of: furyl mono-, di, and tri-substituted phenyl and furyl wherein the substituents are independently selected from:

(i) halo, trifluoromethyl, C_{1-6} alkyl,

(ii) C_{1-6}alkyloxy

(iii) C_{1-6} alkyl-amino, di(C_{1-6} alkyl)-amino,

with the proviso that at least one of the phenyl and furyl substituents be selected from (ii) or (iii);

and R_4 is selected from the a consisting of:

(a) hydrogen;

(b) substituted C_{1-11}alkyl or C_{2-11} alkenyl wherein the substituent is independently selected from the group consisting of hydrogen, hydroxy, halo, C_{1-5} alkyloxy, C_{1-6}alkylthio, C_{1-6}alkylamino, phenyl-C_{1-6} alkylamino, C_{1-6}alkoxycarbonyl; or

(c) aryl C_{0-11} alkyl wherein the aryl group is selected from phenyl, imidazolyl, furyl, thienyl.

21. A method of treatment for increasing the sensitivity of tumor cells to anti-cancer chemotherapeutic agents, said tumor cells being susceptible to anticancer chemotherapeutic agents, and said tumor cells having become resistant to chemotherapy comprising administration to a mammalian species in need of such treatment a therapeutically effective amount of a compound of claim 1 and a pharmaceutically acceptable carrier.

5,700,827

AMINO ACID DERIVATIVES, PROCESSES FOR THE MANUFACTURE THEREOF AND PHARMACEUTICAL COMPOSITIONS (II) CONTAINING THESE COMPOUNDS

Gerd Schnorrenberg, Gau-Algesheim; Franz Esser; Horst Dollinger, both of Ingelheim am Rhein; Birgit Jung, Bingen am Rhein; Georg Speck, Ingelheim am Rhein, and Erich Burger, Bingen am Rhein, all of Germany, assignors to Boehringer Ingelheim GmbH, Ingelheim am Rhein, Germany

Continuation of Ser. No. 434,613, May 4, 1995. This application Jun. 7, 1995, Ser. No. 475,278
Claims priority, application Germany, May 7, 1994, 44 16 255.3; Dec. 22, 1994, 44 45 939.4
Int. Cl.⁶ A61K *31/405;31/40;* **C07D** *403/12;207/12*
U.S. Cl. 514—414 **13 Claims**

1. An amino acid derivative of formula I:

$$R^1—R^{11}—A^1—B$$

or the pharmaceutically acceptable salts thereof, wherein

R^1 is selected from the group consisting of

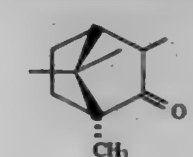

-continued

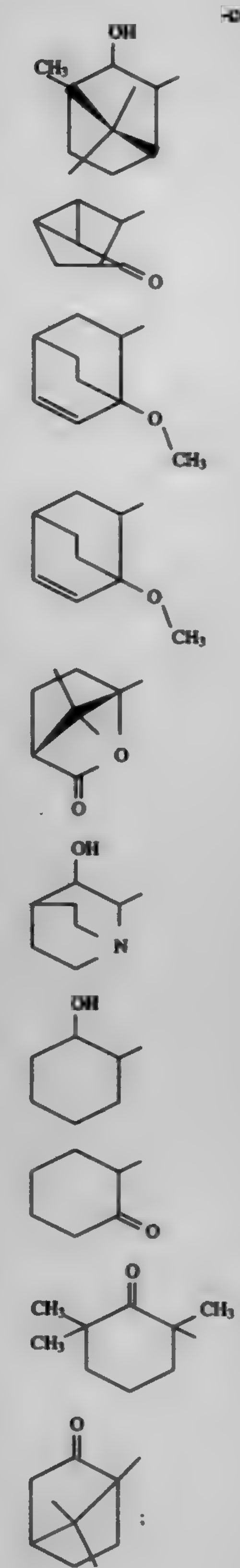

and

;

R^{11} is —C(O)—;

A^1 is selected from the group consisting of a proline radical and a 4-hydroxyproline radical wherein the proline or hydroxyproline radical is attached to R^{11} by way of the ring nitrogen and is attached to B by way of side chain carbonyl;

B is the group —A^2—NR^2R^3;

A^2 is selected from the group consisting of

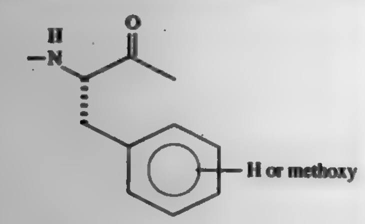

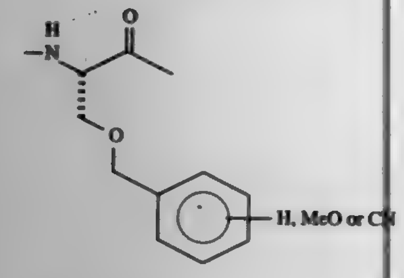

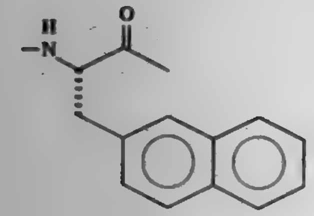

and

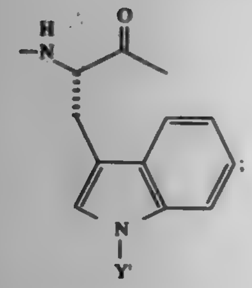

Y' is selected from the group consisting of H and CH_3;

R^2 and R^3 are independently selected from the group consisting of alkyl, arylalkyl, heteroaryl and hydroxy (wherein aryl is selected from the group consisting of phenyl; mono-, di- or tri-substituted phenyl; and naphthyl, wherein the phenyl substituents are independently selected from the group consisting of halogen, trihalomethyl, alkoxy, alkyl, alkylthio, hydroxy, nitro, trifluoromethoxy, dialkylamino and cyano, or two adjacent positions of the phenyl group are linked by —O-$(CH_2)_{1 \text{ or } 2}$—O—; heteroaryl is selected from the group consisting of indolyl, pyridyl, pyrrolyl, imidazolyl and thienyl; and the alkyl and alkoxy groups have from one to three carbon atoms).

5,700,828

TREATMENT OR PREVENTION OF ANOXIC OR ISCHEMIC BRAIN INJURY WITH MELATONIN-CONTAINING COMPOSITIONS

Michael G. Federowicz, Riverside, Calif.; Gregory M. Fahy, Gaithersburg, Md., and Lawrence E. Wood, Wrightwood, Calif., assignors to Life Resuscitation Technologies, Inc., Chicago, Ill.

Filed Dec. 7, 1995, Ser. No. 568,462

Int. Cl.[6] A61K *31/70;31/40*

U.S. Cl. 514—419 **30 Claims**

1. A method for treating or minimizing anoxic or ischemic brain injuries, comprising administering melatonin to a mammal suffering from an anoxic or ischemic insult.

5,700,829

Patent Not Issued For This Number

5,700,830

USE OF NITRIC OXIDE-RELEASING AGENTS FOR REDUCING METASTASIS RISK

Ronald J. Korthuis; Lipu Kong, both of Shreveport, La., and Larry K. Keefer, Bethesda, Md., assignors to The United States of America as represented by the Department of Health and Human Services, Washington, D.C.

Filed Nov. 22, 1994, Ser. No. 344,341

Int. Cl.[6] A61K *31/40;31/535;31/445;31/495;31/13*

U.S. Cl. 514—426 **4 Claims**

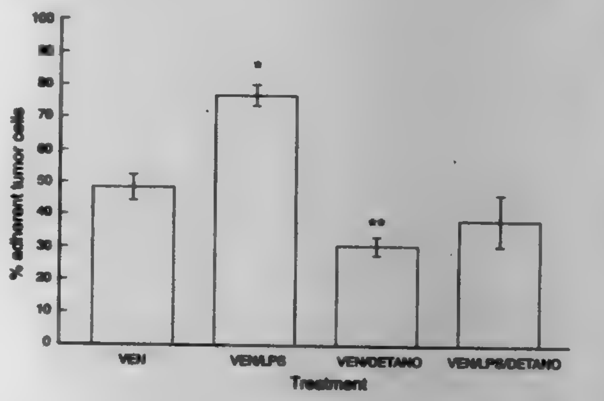

1. A method for inhibiting the adherence between cancerous and noncancerous cells in a mammal in need thereof, comprising the administration to said mammal of a nitric oxide-releasing compound containing a nitric oxide-releasing $N_2O_2^-$ functional group and having the formula:

$$R_1R_2N—\underset{\substack{\| \\ N—OR_3}}{N}\longrightarrow O$$

wherein R_1 and R_2 are independently chosen from C_{1-12} straight chain alkyl, C_{1-12} alkoxy or acyloxy substituted straight chain alkyl, C_{2-12} hydroxy or halo substituted straight chain alkyl, C_{3-12} branched chain alkyl, C_{3-12} hydroxy, halo, alkoxy, or acyloxy substituted branched chain alkyl, C_{3-12} straight chain olefinic and C_{3-12} branched chain olefinic which are unsubstituted or substituted with hydroxy, alkoxy, acyloxy, halo or benzyl, or R_1 and R_2 together with the nitrogen atom to which they are bonded form a heterocyclic group, and R_3 is a group selected from C_{1-12} straight chain and C_{3-12} branched chain alkyl which are unsubstituted or substituted by hydroxy, halo, acyloxy or alkoxy, C_{2-12} straight chain or C_{2-12} branched chain olefinic which are unsubstituted or substituted by halo, alkoxy, acyloxy or hydroxy, C_{1-12} unsubstituted or substituted acyl, sulfonyl and carboxamido; or R_3 is a group of the formula —$(CH_2)_n$—ON=N(O)NR_1R_2, wherein n is an integer of 2–8, and R_1 and R_2 are as defined above, said compound being capable of releasing an adherence-inhibiting effective amount of nitric oxide to said mammal.

5,700,831

PESTICIDAL HYDRAZIDE DERIVATIVES

Mark Achiel Dekeyser, Ontario, Canada, and Paul Thomas McDonald, Middlebury, Conn., assignors to Uniroyal Chemical Company, Inc., Middlebury, Conn., and Uniroyal Chemical Ltd/Ltee, Elmira, Canada

Filed Mar. 12, 1996, Ser. No. 614,291

Int. Cl.[6] C07C *243/14;* **A61K** *31/16*

U.S. Cl. 514—489 **12 Claims**

1. A compound of the formula

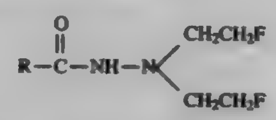

wherein R is a) phenyl; phenyl(C_1–C_4 alkoxy); phenoxy; or benzyl, the phenyl ring of each being optionally substituted with one or more of halogen, nitro, C_1–C_8 alkyl, C_1–C_8 alkoxy, C_1–C_8 haloalkyl, C_1–C_8 haloalkoxy, di(C_1–C_8 alkyl)amino, phenyl, or phenoxy.

5,700,832

ANTIANEMIC AGENT CONTAINING IRON AND DIFRUCTOSE

Bu Hyun Baik; Young Woo Lee, both of Seoul, and Yong Bok Lee, Kwangju, all of Rep. of Korea, assignors to Daewon Pharm. Co., Ltd., Rep. of Korea

Filed Oct. 17, 1995, Ser. No. 544,105

Claims priority, application Rep. of Korea, Oct. 19, 1994, 94-26692

Int. Cl.[6] A61K *31/295;31/70;31/495;31/44;31/715*

U.S. Cl. 514—502 **4 Claims**

1. An antianemic agent for the treatment of anemia caused by iron-deficiency, wherein the agent enhances iron absorption across the intestinal lumen to mucosal cell while promoting iron transport across the mucosal cell to capillary, and the agent consists of an iron and difructose complex having an iron to difructose molar ratio of between 1:0.5 to 1:1000, and optionally at least one hematopoietic.

5,700,833

ISOCARBACYCLIN DERIVATIVES

Yasuyoshi Watanabe, Osaka; Masaaki Suzuki, Aichi; Atsuo Hazato, 18-4-232 Tamadaira 3-chome, Hino-shi, Tokyo 191, all of Japan, and Bengt Langström, Upsala, Sweden, assignors to Research Developement Corporation of Japan, Kawaguchi, and Atsuo Hazato, Tokyo, both of Japan

Filed Jan. 31, 1996, Ser. No. 594,152

Claims priority, application Japan, Mar. 10, 1995, 7-051509

Int. Cl.[6] C07C *59/11*

U.S. Cl. 514—510 **8 Claims**

1. An isocarbacyclin derivative represented by the following Chemical Formula [I]:

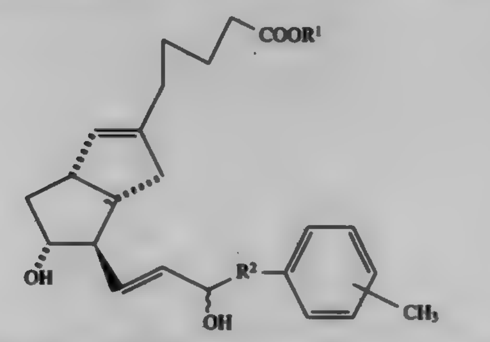

(1)

wherein R^1 represents a hydrogen atom, an alkyl group or a cation, and R^2, an alkylene group.

5,700,834

SYNERGISTIC ANTIMICROBIAL COMPOSITION OF 1,2-DIBROMO-2,4-DICYANOBUTANEAND ALKYLGUANIDINE COMPOUNDS

Paul Stinavage, new Market, Md., assignor to Calgon Corporation, Pittsburgh, Pa.

Filed Aug. 31, 1995, Ser. No. 521,698

Int. Cl.[6] A01N *37/34;37/52*

U.S. Cl. 514—526 **13 Claims**

1. A synergistic antimicrobial combination comprising synergistic effective amounts of:

a) 1,2-dibromo-2,4-dicyanobutane; and

b) dodecylguanidine hydrochloride, wherein the weight ratio of a) to b), on an active basis, ranges between about 1000:1 and 1:1000.

5,700,835

3-OXA-D-PROSTAGLANDINS FOR LOWERING IOP

Thomas R. Dean, Weatherford; Mark Hellberg, Arlington, and Verney L. Sallee, Southlake, all of Tex., assignors to Alcon Laboratories, Inc., Fort Worth, Tex.

Filed Dec. 22, 1995, Ser. No. 577,037

Int. Cl.[6] A61K *31/215;31/19*

U.S. Cl. 514—530 **8 Claims**

1. A method of treating glaucoma or ocular hypertension in mammals which comprises administering to the mammal a pharmaceutically effective amount of a DP-agonist of formula (II):

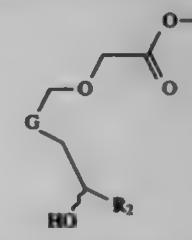

(II)

wherein:

R_1 is H, alkyl or alkylcycloalkyl;

R_2 is alkyl, cycloalkyl or alkylcycloalkyl; and

G is

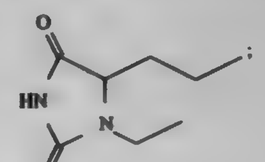

(i)

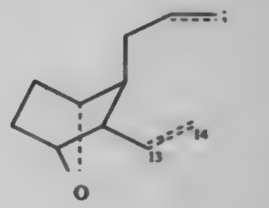

(ii)

or

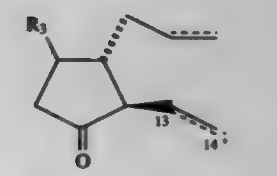

(iii)

wherein:

R_3 is H, OH or alkyl;

$\overline{\overline{\ \ }}$ represents a single bond or double bond; provided that double bonds between the 13 and 14 position are in the trans configuration; and pharmaceutically acceptable salts thereof.

5,700,836

AROMATIC CARBOXYLIC ACID DERIVATIVES

Michael Klaus, Weil am Rhein, Germany, and Peter Mohr, Basel, Switzerland, assignors to Hoffmann-La Roche Inc., Nutley, N.J.

Division of Ser. No. 294,466, Aug. 23, 1994, abandoned. This application Oct. 21, 1996, Ser. No. 734,222

Claims priority, application Switzerland, Sep. 2, 1993, 2618/93; Jun. 21, 1994, 1960/94

Int. Cl.^{6} A01N *37/10;37/18*

U.S. Cl. 514—544 **14 Claims**

1. A method of treating photodamaged skin comprising topically administering to said photodamaged skin a composition which comprises a compound of the formula:

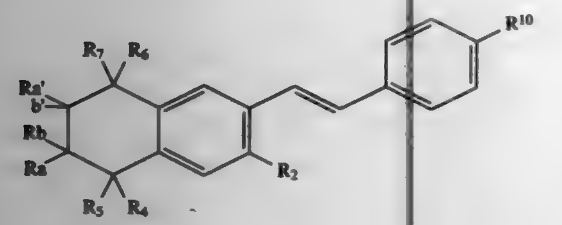

Ie

wherein

R^2 is C_{2-8}-alkanoyl, C_{2-8}-alkyl, C_{2-8}-alkenyl, C_{2-8}-alkynyl or $—OCH_2R^3$;

R^3 is hydrogen, C_{1-6}-alkyl, C_{2-6}-alkenyl or C_{2-6}-alkynyl;

R^5 and R^7 each independently are hydrogen or C_{1-5}-alkyl;

R^4 and R^6 each independently are hydrogen or C_{1-5}-alkyl, or taken together are methylene or ethylene which are unsubstituted or substituted by hydroxy;

R^a, $R^{a'}$, R^b and $R^{b'}$ each are independently hydrogen or C_{1-5}-alkyl;

R^{10} is carboxyl, C_{1-6}-alkoxycarbonyl or mono- or di-(C_{1-6}-alkyl)carbamoyl;

and pharmaceutically acceptable salts of carboxylic acids of formula Ie;

and a pharmaceutically acceptable carrier, wherein said composition is administered in an amount sufficient to treat said photodamaged skin.

5,700,837

METHOD AND COMPOSITION FOR NORMALIZING INJURY RESPONSE

Susan Trimbo, Evanston, Ill., assignor to Nestec Ltd., Vevey, Switzerland

Continuation of Ser. No. 230,592, Apr. 21, 1994, Pat. No. 5,574,065. This application Mar. 5, 1996, Ser. No. 612,980

Int. Cl.^{6} A61K *31/22;31/225;31/19;31/20*

U.S. Cl. 514—546 **24 Claims**

1. A lipid composition comprising:

medium chain triglycerides;

an omega-6 fatty acid source in an amount comprising at least 10% by weight of the composition;

an omega-3 fatty acid source in an amount comprising at least 10% by weight of the composition; and

the ratio of omega-6 fatty acid to omega-3 fatty acid being less than or equal to 1 to 1 by weight.

5,700,838

HYDROXAMIC ACID DERIVATIVES AS METALLOPROTEINASE INHIBITORS

Jonathan Philip Dickens, Cambridge; Michael John Crimmin, and Raymond Paul Beckett, both of Cowley, all of United Kingdom, assignors to British Biotech Pharmaceuticals Limited, Oxford, United Kingdom

PCT No. PCT/GB93/01557, § 371 Date Jan. 23, 1995, § 102(e) Date Jan. 23, 1995, PCT Pub. No. WO94/02447, PCT Pub. Date Feb. 3, 1994

PCT Filed Jul. 23, 1993, Ser. No. 374,602

Claims priority, application United Kingdom, Jul. 23, 1992, 9215665

Int. Cl.^{6} A61K *31/19*

U.S. Cl. 514—575 **82 Claims**

1. A compound of the formula (I):

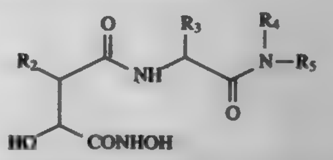

(I)

or a pharmaceutically acceptable salt, solvate or hydrate thereof, wherein

R_2 represents a group R_6—A— wherein A represents a divalent straight or branched, saturated or unsaturated hydrocarbon chain of up to 6 carbon atoms or said chain interrupted by an O or S atom, and R_6 represents hydrogen or an optionally substituted phenyl, C_3–C_8 cycloalkyl or C_3–C_8 cycloalkenyl group;

R_3 represents a group R_7—$(B)_n$— wherein n is 0 or 1, B represents a divalent straight or branched, saturated or unsaturated hydrocarbon chain of up to 6 carbon atoms or said chain interrupted by an O or S atom, and R_7 is —CONHOH, carboxyl, esterified or antidated carboxyl, C_3–C_8 cycloalkyl, C_3–C_8 cycloalkenyl, heterocyclyl, phenyl, napthyl, or substituted phenyl or napthyl in which the substituent(s) are selected from the group consisting of phenyl, hydroxy, C_1–C_6 alkoxy, benzyloxy, trifluoromethyl, halo and R_8— (C═O)—(C_1–C_6 alkyl)—O— wherein R_8 is hydroxy, amino, or an amino acid residue linked via an amide bond; or (except when n=0) R_7 is hydrogen;

R_4 represents hydrogen or methyl;

R_5 represents hydrogen; C_1–C_6 alkyl; or a group D-(C_1–C_6 alkyl) wherein D represents hydroxy, (C_1–C_6) alkoxy, (C_1–C_6) alkylthio, acylamino, optionally substituted phenyl, or a heterocyclic group, NH_2, or mono- or di-(C_1–C_6 alkyl) amino;

or R_3 and R_5 taken together represent a divalent, saturated or unsaturated hydrocarbon chain of from 8–14 carbon atoms, or said chain interrupted by an O, S or N heteroatom;

provided that R_3 is not the characteristic side chain of a natural alpha-amino acid, or the characteristic side chain of a natural alpha-amino acid in which any functional substituents are protected, any amino groups are acylated, and any carboxyl groups are esterified.

5,700,839

ALKYL-5-METHYLSULFONYLBENZOYLGUANIDINE DERIVATIVES

Rolf Gericke, Seeheim; Dieter Dorsch, Ober-Ramstadt; Manfred Baumgarth, Darmstadt; Klaus-Otto Minck, Ober-Ramstadt, and Norbert Beier, Reinheim, all of Germany, assignors to Merck Patent Gesellschaft mit Beschrankter Haftung, Darmstadt, Germany

Filed Oct. 20, 1995, Ser. No. 546,570

Claims priority, application Germany, Oct. 22, 1994, 44 37 874.2

Int. Cl.^{6} A61K *31/165;* **C07C** *235/50;231/02;231/12*

U.S. Cl. 514—618 **11 Claims**

1. A benzoylguanidine compound of the formula I

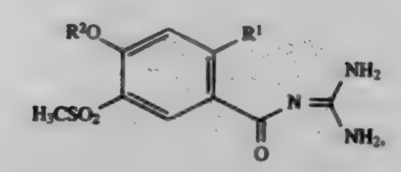

I

wherein

R^1 is methyl or ethyl and

R^2 is H, a straight-chain or branched C_1–C_6-alkyl- or C_2–C_6-alkenyl-radical, C_3–C_7-cycloalkyl, benzyl or phenyl which is unsubstituted or mono-, di- or trisubstituted by methyl, methoxy, amino, F, Cl, Br or CF_3,

and their physiologically acceptable salts.

5,700,840

FLUOROALKENYL COMPOUNDS AND THEIR USE AS PEST CONTROL AGENTS

Dennis Paul Phillion, St. Charles; Peter Gerrard Ruminski, Ballwin, and Gopichand Yalamanchili, St. Louis, all of Mo., assignors to Monsanto Company, St. Louis, Mo.

Division of Ser. No. 329,593, Oct. 26, 1994. This application May 23, 1995, Ser. No. 447,476

Int. Cl.^{6} A61K *31/16;* **C07C** *233/12;233/15*

U.S. Cl. 514—628 **3 Claims**

1. A compound of the formula $BrCF_2CFClCH_2CO$—R wherein R is $—NR_5R_6$; wherein each of R_5 and R_6 is independently

(i) an aliphatic or an aromatic group substituted with at least one group selected from hydroxy, alkoxy, halo, nitro, amino, thiol, alkylthio, carboxyl, alkoxycarbonyl, and phenyl;

(ii) a C_1–C_{12} aliphatic amine group substituted with at least one group selected from hydroxy, alkoxy, halo, nitro, amino, thiol, alkylthio, carboxyl, alkoxycarbonyl, and phenyl; or

(iii) a C_2–C_{12} aliphatic carboxylic acid group substituted with at least one group selected from hydroxy, alkoxy, halo, nitro, amino, thiol, alkylthio, carboxyl, alkoxycarbonyl, and phenyl.

5,700,841

QUATERNARY AMMONIUM CARBOXYLATE AND BORATE COMPOSITIONS AND PREPARATION THEREOF

Leigh E. Walker, Macungie, Pa., assignor to Lonza Inc., Annandale, N.J.

Division of Ser. No. 74,136, Jun. 9, 1993. This application Apr. 18, 1996, Ser. No. 635,431

Int. Cl.^{6} A01N *33/12*

U.S. Cl. 514—642 **3 Claims**

1. A wood preservative system comprising

(a) a biocidal effective amount of

(i) at least one di-C_8–C_{12} alkyl quaternary ammonium borate having the formula

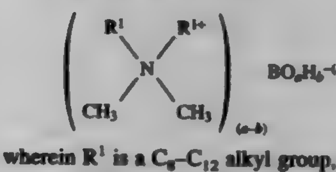

(IX)

wherein R^1 is a C_8–C_{12} alkyl group, a is 2 or 3, but when a is 2, b is 0 or 1, and when a is 3, b is 0, 1, or 2; and optionally (ii) at least one di-C_8–C_{12} alkyl quaternary ammonium carboxylate having the formula

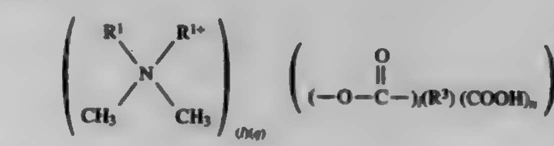

wherein R^1 is a C_8–C_{12} alkyl group, R^3 is a substituted or unsubstituted, interrupted or uninterrupted C_1–C_{100} group, l and q independently are 1, 2, or 3 and (l) (q) is 1, 2, or 3; and n is 0 or integer from 1–50; and

(b) an aqueous solvent;

said wood preservative system being metal-free.

5,700,842

METHODS OF INCORPORATING A HYDROPHOBIC SUBSTANCE INTO AN AQUEOUS SOLUTION

Douglas Bryan Cole, Appleton, Wis., assignor to Kimberly-Clark Worldwide, Inc., Neenah, Wis.

Filed Nov. 1, 1995, Ser. No. 551,661

Int. Cl.^{6} A61K *31/16*

U.S. Cl. 514—721 **27 Claims**

1. A method of incorporating a hydrophobic antimicrobial agent into an aqueous solution comprising at least partially dissolving said hydrophobic substance in an amide to form an active, homogeneous mixture and combining said active mixture with said aqueous solution to form a homogeneous composition, wherein said amide has the following structural formula:

$$R-\overset{\overset{\displaystyle O}{\|}}{C}-NH_2$$

wherein R is a fatty alkyl group.

5,700,843

1,1,1,2-TETRAFLUOROETHANE AS A BLOWING AGENT IN INTEGRAL SKIN POLYURETHANE SHOE SOLES

Valeri L. Valoppi, Southgate, Mich., assignor to BASF Corporation, Mount Olive, N.J.

Continuation of Ser. No. 220,954, Mar. 31, 1994, Pat. No. 5,464,879, which is a continuation of Ser. No. 999,632, Dec. 31, 1992, abandoned. This application Oct. 16, 1995, Ser. No. 543,[illegible]

Int. Cl.^{6} C08G *18/32*

U.S. Cl. 521—51 **8 Claims**

1. A flexible integral skin polyurethane foam composition, comprising

A. an organic isocyanate,

B. isocyanate reactive polyols having a functionality of at least 1.5,

C. 1,1,1,2-tetrafluoroethane as a blowing agent,

D. a catalyst capable of promoting urethane formation,

E. a chain extender.

F. optionally, an essentially linear alcohol having from 10 to 20 carbons, and

G. optionally, fillers; pigments, antioxidants, and stabilizers.

5,700,844

PROCESS FOR MAKING A FOAMED POLYMER

Jeffrey Curtis Hedrick, Park Ridge, N.J.; James Lupton Hedrick, Pleasanton, Calif.; Yun-Hsin Liao, W. Nyack, N.Y.; Robert Dennis Miller, San Jose, Calif., and Do-Yoon Shih, Poughkeepsie, N.Y., assignors to International Business Machines Corporation, Armonk, N.Y.

Filed Apr. 9, 1996, Ser. No. 629,254

Int. Cl.^{6} C08J *9/02*

U.S. Cl. 521—77 **4 Claims**

1. A process for making a polysiloxane foam comprising the steps of:

(a) dispersing thermally degradable polymer particles in polysiloxane precursor;

(b) polymerizing the polysiloxane precursor to form rigid polysiloxane without degrading the particles; and

(c) heating the polysiloxane to degrade the particles without expanding the polysiloxane and form the polysiloxane foam.

5,700,845
CARBON BLACK CONTAINING EPDM COMPOSITIONS AND PROCESS FOR PRODUCING SAME

Bin Chung, Nashua, N.H.; Bruce E. Mackay, Framingham, Mass., and Ivan Zlatko Podobnik, Nashua, N.H., assignors to Cabot Corporation, Boston, Mass.

Filed Oct. 3, 1994, Ser. No. 317,208
Int. Cl.⁶ C08G *18/14;* **C08K** *3/04*

U.S. Cl. 521—99 **4 Claims**

1. A foamable EPDM composition comprising:
EPDM;
a carbon black having a CTAB of 50 to 60 m^2/g and a DBP of 90 to 115 cc/100 g; and
a blowing agent,
wherein the carbon black is present in an amount of 50–250 phr.

5,700,846
POLYUREA FOAM MADE FROM A PARTIALLY AMINATED POLYETHER POLYAMINE

Robert Allison Grigsby, Jr., and Robert LeRoy Zimmerman, both of Austin, Tex., assignors to Huntsman Petrochemical Corporation, Austin, Tex.

Continuation of Ser. No. 259,832, Jun. 15, 1994, abandoned. This application Aug. 18, 1995, Ser. No. 516,690
Int. Cl.⁶ C08G *8/02*

U.S. Cl. 521—128 **20 Claims**

1. A process for preparing a polyurea foam which comprises reacting:
an aliphatic polyoxyalkylene polyamine having an average functionality from about 2 to about 6 wherein 64 to about 95 percent of the functional groups are primary amines and including primary or secondary hydroxyl groups among the remaining functional groups; with
a polyisocyanate quasiprepolymer formed by reacting a polyfunctional isocyanate with an active hydrogen-containing compound selected from the group consisting of polyols, polyamines and mixtures thereof, wherein the polyisocyanate quasiprepolymer is employed in an amount sufficient to provide an isocyanate index of 0.5 to 1.5; and in the presence of
a blowing agent that comprises water;
wherein said foam is prepared in the absence of a chain extender, or is prepared in the presence of a chain extender that is present in an amount of less than about 5 parts by weight per 100 parts by weight active hydrogen compound.

5,700,847
MOLDED POLYURETHANE FOAM WITH ENHANCED PHYSICAL PROPERTIES

Andrew M. Thompson, West Chester, Pa., assignor to Arco Chemical Technology, L.P., Greenville, Del.

Filed Dec. 4, 1995, Ser. No. 566,559
Int. Cl.⁶ C08J *9/06;* **C08G** *18/10;18/48*

U.S. Cl. 521—159 **28 Claims**

1. A process for the preparation of molded polyurethane foam, comprising reacting, in a closed mold, a foam-forming reactive mixture comprising:
a) an isocyanate component comprising in major part an isocyanate-terminated prepolymer having an NCO group content of from about 5 to about 35 weight percent based on the weight of said isocyanate-terminated prepolymer, said isocyanate-terminated prepolymer prepared by the reaction of a stoichiometric excess of one or more di- or polyisocyanates with a polyol component containing a polyoxyalkylene polyether polyol portion comprising recurring units derived from one or more higher alkylene oxides and having an unsaturation of less than 0.03 meq unsaturation per gram of polyoxyalkylene polyether polyol portion and a number average equivalent weight of about 1500 to about 5000; with
b) one or more isocyanate reactive component(s), at an isocyanate index of between 70 and 130; optionally in the presence of an effective amount of one or more catalysts which promote the reaction of a) with b), a cell-stabilizing effective amount of one or more surfactants; and an amount of blowing agent sufficient to provide a foam density between about 1.0 lb/ft³ and 4.0 lb/ft³.

5,700,848
GEL COMPOSITIONS PREPARED FROM CROSSLINKABLE POLYSACCHARIDES, POLYCATIONS AND/OR LIPIDS AND USES THEREFOR

Patrick Soon-Shiong; Neil P. Desai; Paul A. Sandford; Roswitha A. Heintz, all of Los Angeles, and Soebianto Sojomihardjo, Pasadena, all of Calif., assignors to Vivorx Inc., Santa Monica, Calif.

Division of Ser. No. 232,054, Apr. 28, 1994, which is a continuation-in-part of Ser. No. 784,267, Oct. 29, 1991, abandoned. This application Jun. 7, 1995, Ser. No. 472,191
Int. Cl.⁶ C08F *2/50;* **C12N** *11/04;* **A61K** *9/50*

U.S. Cl. 522—7 **20 Claims**

1. A biocompatible gel containing entrapped mammalian cells produced by:
a) chemically modifying a biocompatible material having a reactive functionality thereon with a reactive species capable of free radical polymerization to form a modified biocompatible material having the formula:

A—X

wherein
A is a polysaccharide, polycation or lipid;
X is a moiety containing a carbon-carbon double bond or triple bond capable of free radical polymerization, wherein X is not a methylol amide; and
A and X are linked covalently through linkages selected from the group consisting of ester, ether, thioether, disulfide, amide, secondary amines, tertiary amines, direct C—C linkages, sulfate esters, sulfonate esters, phosphate esters, urethanes, and carbonates; and
b) contacting said modified biocompatible material with a free radical initiating system under free radical producing conditions in an aqueous media that contains mammalian cells and is free of organic solvents, wherein said free radical producing conditions are not detrimental to the viability of said mammalian cells.

5,700,849
PHOTOPOLYMERIZABLE COMPOSITION CONTAINING A SENSITIZING DYE AND A TITANOCENE COMPOUND

Syunichi Kondo, and Kazuo Fujita, both of Shizuoka, Japan, assignors to Fuji Photo Film Co., Ltd., Minami-Ashigara, Japan

Filed Feb. 23, 1996, Ser. No. 606,435
Int. Cl.⁶ C08F *2/50*

U.S. Cl. 522—16 **6 Claims**

1. A photopolymerizable composition comprising an addition-polymerizable compound having at least one ethylenically unsaturated double bond, a sensitizing dye represented by the following formula (I) and a titanocene compound:

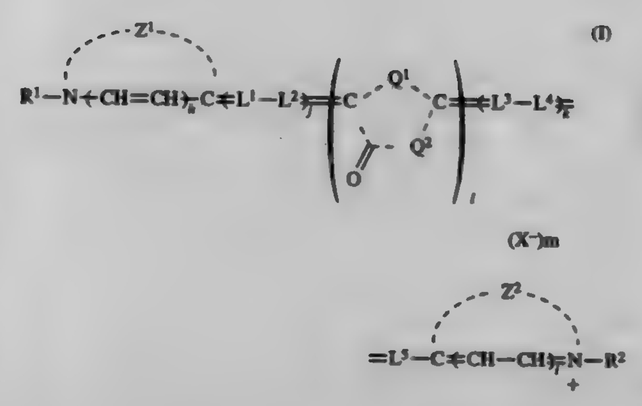

wherein Z^1 and Z^2 each represents a nonmetallic atom group necessary for forming a 5 - or 6-membered nitrogen-containing heterocyclic ring used in cyanine dyes; R^1 and R^2 each represents an alkyl group; Q^1 and Q^2 represent in combination therewith an atomic group necessary for forming a 4-thiazolidinone ring, a 5-thiazolidinone ring, a 4-imidazolidinone ring, a 4-oxazolidinone ring, a 5-oxazolidinone ring, a 5-imidazolidinone ring or a 4-dithiolanone ring; L^1, L^2, L^3, L^4 and L^5 each represents a methine group; m represents 1 or 2; i and h each represents 0 or 1; 1 represents 1 or 2; j and k each represents 0, 1, 2 or 3; and X^- represents a counter anion.

5,700,850
COLORANT COMPOSITIONS AND COLORANT STABILIZERS

Ronald Sinclair Nohr, Alpharetta, and John Gavin MacDonald, Decatur, both of Ga., assignors to Kimberly-Clark Worldwide, Neenah, Wis.

Continuation-in-part of Ser. No. 403,240, Mar. 10, 1995, abandoned, which is a continuation-in-part of Ser. No. 373,958, Jan. 17, 1995, abandoned, which is a continuation-in-part of Ser. No. 360,501, Dec. 21, 1994, and Ser. No. 359,670, Dec. 20, 1994, abandoned, which is a continuation-in-part of Ser. No. 258,858, Jun. 13, 1994, abandoned, which is a continuation-in-part of Ser. No. 119,912, Sep. 10, 1993, abandoned, which is a continuation-in-part of Ser. No. 103,503, Aug. 5, 1993, abandoned, said Ser. No. 360,501is a continuation-in-part of Ser. No. 258,858. This application Jun. 5, 1995, Ser. No. 463,496
Int. Cl.⁶ C07L *5/16;* **G03C** *7/327;7/36;* **C08F** *2/50*

U.S. Cl. 522—34 **18 Claims**

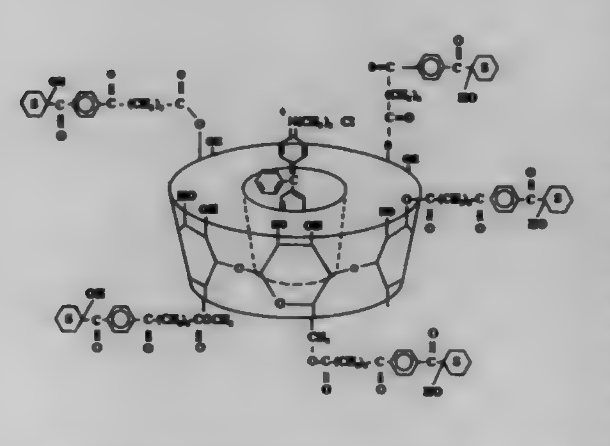

1. A colorant stabilizing composition comprising a colorant and a colorant stabilizer compound represented by the following formula:

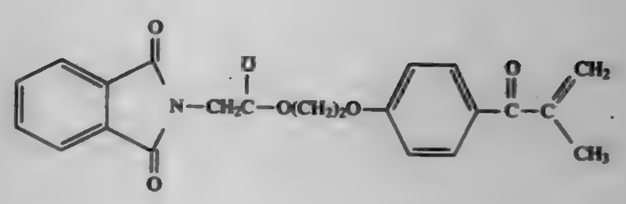

5,700,851
INK-JET INK COMPOSITION CONTAINING A COLORED POLYURETHANE DISPERSION

Jeffery H. Banning, Hillsboro, and Loc V. Bui, Beaverton, both of Oreg., assignors to Tektronix, Inc., Wilsonville, Oreg.

Filed Oct. 17, 1995, Ser. No. 543,966
Int. Cl.⁶ C08J *3/00;* **C08K** *3/20;* **C08L** *75/00;* **G01D** *11/00*

U.S. Cl. 523—161 **37 Claims**

1. A non-erasable ink-jet ink composition comprising the admixture of:
(1) an aqueous colored polyurethane dispersion that is the reaction product of:
(a) a colored urethane propolymer that is the catalyzed reaction product of:
(i) at least one polyol;
(ii) at least one polyisocyanate;
(iii) at least one internal surfactant; and
(iv) at least one reactive colorant; wherein the stoichiometric equivalent molar ratio of internal surfactant to polyol is about 0.5:1 to about 2.0:1 and the stoichiometric equivalent molar ratio of NCO groups to total OH groups in said propolymer is about 1.2:1 to about 2.0:1;
(b) at least one neutralizing agent;
(c) a first aqueous dispersing medium; and
(d) at least one chain extender;
(2) a second aqueous dispersing medium; and
(3) at least one humectant; wherein said ink-jet ink composition has a jettable viscosity from about 1 to about 20 centipoise at about 10° C. to about 45 ° C.

5,700,852
PAPER COATING COMPOSITION

Shin-ichiro Iwanaga; Shigeru Shingae; Takasi Morita; Osamu Ishikawa, and Norichika Nojima, all of Yokkaichi, Japan, assignors to Japan Synthetic Rubber Co., Ltd., Tokyo, Japan

Filed Mar. 31, 1995, Ser. No. 414,592
Claims priority, application Japan, Apr. 6, 1994, 6-092971
Int. Cl.⁶ C08L *83/00*

U.S. Cl. 523—201 **9 Claims**

1. A paper coating composition which comprises as a binder a latex of a particle A consisting of (a) 20 to 80% by weight of aliphatic conjugated diene monomer units, (b) 0.5 to 10% by weight of ethylenically unsaturated carboxylic acid monomer units and (c) 20 to 79.5% by weight of units of one or more additional monomers copolymerizable with the above monomers (a) and (b) wherein (a)+(b)+(c)=100% by weight and having two glass transition points in the range of from −100° C. to 50° C., and wherein said particle A has a core-shell structure where said core consists of 20 to 70% by weight of a portion (1) in which the glass transition point is in the range of from −100° C. to 0° C. and said shell consists of 30–80% by weight of another portion (2) in which the glass transition point is in the range of from −5° C. to 50° C., and wherein the difference between the two glass transition points is 10° to 100° C., and wherein a weight average molecular weight of said particle A is at least 40,000, and wherein a weight average molecular weight of said shell is at least 40,000.

5,700,853

SILICONE RUBBER COMPOSITIONS

Takeo Yoshida; Syuuichi Azechi, and Toshio Shiobara, all of Usui-Gun, Japan, assignors to Shin-Etsu Chemical Co., Ltd., Tokyo, Japan

Filed Oct. 23, 1996, Ser. No. 735,504

Claims priority, application Japan, Oct. 24, 1995, 7-299070

Int. Cl.[6] C08K *9/06*

U.S. Cl. 523—212 **15 Claims**

1. A silicone robber composition comprising
(A) an organopolysiloxane curable with an organic peroxide or by addition reaction curing,
(B) a sufficient amount to cure organopolysiloxane (A) of a curing agent, the amount of components (A) and (B) combined being 100 parts by weight,
(C) 1 to 100 parts by weight of a non-spherical silica fine powder, and
(D) 100 to 900 parts by weight of a spherical fused silica filler comprising (a) 50 to 95% by weight of spherical fused silica having a mean particle size of 7 to 40 μm and (b) 50 to 5% by weight of spherical fused silica having a mean particle size of 0.1 to 6.5 μm.

5,700,854

Patent Not Issued For This Number

5,700,855

Patent Not Issued For This Number

5,700,856

PEROXIDE-GENERATING COMPOSITION FOR USE WITH UNSATURATED POLYESTER RESINS AND METHOD OF USE

Stuart B. Smith, Conyers, Ga., assignor to Hehr International Inc., Conyers, Ga.

Filed Apr. 10, 1996, Ser. No. 629,895

Int. Cl.[6] C08K *5/00;* **C08F** *2/46;* **C08J** *3/28*

U.S. Cl. 524—176 **22 Claims**

1. A peroxide-generating composition adapted for use with an unsaturated polyester resin composition to provide a low exotherm, peroxide-cured polyester resin composition, which peroxide-generating composition comprises:
a) an allyl alcohol alkanoate; and
b) a metal salt promoter in sufficient concentration to generate from the allyl alcohol alkanoate a peroxide to effect a cure of the unsaturated polyester resin composition.

5,700,857

FLAME RESISTANT POLYESTER RESIN COMPOSITION

Atsushi Mukohyama, Yokohama, Japan, assignor to E. I. Du Pont de Nemours and Company, Wilmington, Del.

PCT No. PCT/US94/14886, § 371 Date Jun. 25, 1996, § 102(e) Date Jun. 25, 1996, PCT Pub. No. WO95/18179, PCT Pub. Date Jul. 6, 1995

PCT Filed Dec. 28, 1994, Ser. No. 666,501

Claims priority, application Japan, Dec. 28, 1993, 5-334726

Int. Cl.[6] C08K *5/10;5/06;5/05*

U.S. Cl. 524—290 **4 Claims**

1. A flame resistant polyester resin composition essentially comprising:
(A) 20–80% by weight based on the total weight of components A, B, C, and D of a polyester matrix comprised of
(A)(1) a polyester resin selected from the group consisting of polyethylene terephthalate, polyethylene terephthalate/polybutylene terephthalate blends, polyethylene terephthalate/polybutylene terephthalate copolymers, and blends thereof (with the proviso that the blends and copolymers contain at least 70% by weight of ethylene terephthalate units) and
(A)(2) a polyalkylene oxide soft segment component having a molecular weight of 200–3,250,

wherein 1–10 parts by weight of the soft segment component is incorporated per 99–90 parts by weight of the polyester resin;
(B) 14–25% by weight of a brominated flame retardant;
(C) 1–10% by weight of a plasticizer represented by the Chemical Formula:

$$A-O-\left[\underset{\displaystyle X}{\underset{|}{CH}}-(CH_2)_m-O\right]_n-B$$

wherein m=1–3; n=4–25; A=C_1–C_{10} alkyl, acyl, or aroyl; B=C_1–C_{10} alkyl, acyl, or aroyl; and X=H, CH_3, or C_2H_5; and
(D) 1–10% by weight of a crystallization promoter derived from the group consisting of
(D)(1) at least one source of carboxyl groups selected from the group consisting of hydrocarbon acids containing 7–54 carbon atoms and organic polymers having at least one carboxyl group attached thereto,
(D)(2) at least one source of metal ions capable of reacting with the carboxyl groups of (D)(1) selected from the group consisting of sodium and potassium ion sources, where the concentration of said metal in said matrix resin (A) is at least 0.01 weight percent,
(D)(3) an inorganic alkali metal salt, and
(D)(4) mixtures of (D)(1), (D)(2), and (D)(3).

5,700,858

PLASTISOL PAINT AND METHOD OF USE

Thomas Deir, 1033 Lunaai St., Kailua, Hi. 96734, and John Pitre, 46-35 Kahala Ave., Honolulu, Hi. 96816

Filed Jun. 8, 1995, Ser. No. 587,896

Int. Cl.[6] C08K *5/12;* **C08L** *33/13*

U.S. Cl. 524—297 **11 Claims**

1. A method of using an acrylic plastisol as an artist's paint wherein said plastisol comprises polyalkylmethacrylate and an acrylic binder and pigmented plasticizer, said plastisol having a viscosity in the range of about 16 to 89 poise as measured by Brookfield RVT viscometer, 10 rpm, @ room temperature, and in which after room-temperature painting, the said plastisol is heated to a temperature in the range of about 250° F. to 400° F. permanently to harden the plastisol.

5,700,859

AQUEOUS EMULSION OF FLUOROCARBON POLYMER AND METHOD FOR PRODUCING THE SAME

Masatsune Ogura, Ichikawa; Shizuo Chiba, and Kayoko Ohtera, both of Shimizu, all of Japan, assignors to DuPont-Mitsui Fluorochemicals Co., Ltd., Tokyo, Japan

PCT No. PCT/JP95/01325, § 371 Date Feb. 16, 1996, § 102(e) Date Feb. 16, 1996, PCT Pub. No. WO96/01872, PCT Pub. Date Jan. 25, 1996

PCT Filed Jul. 3, 1995, Ser. No. 596,234

Claims priority, application Japan, Jul. 11, 1994, HEI 6-180480

Int. Cl.[6] C08J *3/00*

U.S. Cl. 524—314 **3 Claims**

1. An aqueous emulsion of fluorocarbon polymer comprising:
a fluorocarbon polymer selected from the group consisting of polymers of tetrafluoroethylene, chlorotrifluoroethylene and vinylidenefluoride, or a fluorocarbon copolymer selected from

the group consisting of tetrafluoroethylene.hexafluoropropylene copolymer, tetrafluoroethylene.fluoroalkylvinylether copolymer, tetrafluoroethylene.ethylene copolymer, polychlorotrifluoroethylene.hexafluoropropylene copolymer, polyvinylidenefluoride.hexafluoropropylene copolymer, end vinylidenefluoride.hexafluoropropylene copolymer;
sodium dialkylsulfosuccinic acid of not less than 1.5% by weight relative to the fluorocarbon polymer; and
an alkyleneglycol.

5,700,860

LIQUID CRYSTAL ORIENTING AGENT

Michinori Nishikawa, Yokkaichi; Tsuyoshi Miyamoto, Yokohama; Shigeo Kawamura, Yokkaichi; Kyouyu Yasuda, Tsu; Yasuaki Mutsuga, and Yasuo Matsuki, both of Yokkaichi, all of Japan, assignors to Japan Synthetic Rubber Co., Ltd., Tokyo, Japan

Filed Mar. 27, 1996, Ser. No. 622,280

Claims priority, application Japan, Mar. 27, 1995, 7-068074; Feb. 20, 1996, 8-032204

Int. Cl.[6] C08K *5/06;* **G02F** *1/1337*

U.S. Cl. 524—317 **12 Claims**

1. A liquid crystal aligning agent comprising a solution comprising:
(1) at least one polymer selected from the group consisting of a polyamic acid obtainable by a reaction between a tetracarboxylic acid dianhydride and a diamine compound and an imidized polymer obtainable by cyclization with dehydration of the polyamic acid;
(2) at least one first solvent selected from the group consisting of N-alkyl-2-pyrrolidones, lactones, and 1,3-dialkyl-2-imidazolidinones; and,
(3) at least one second solvent selected from the group consisting of:
(a) a first compound represented by the formula (I)

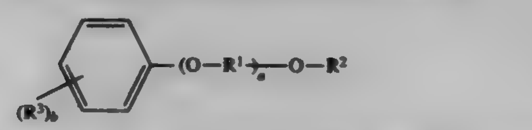

(I)

wherein R^1 is an alkylene group having 2 or 3 carbon atoms; R^2 is an alkyl group having 1 to 4 carbon atoms an acetyl group or a propionyl group; R^3 is an alkyl group having 1 to 3 carbon atoms, an alkoxyl group having 1 to 3 carbon atoms, or a halogen atom; a is 1 or 2; and b is 0 or integers of from 1 to 5; and
(b) a second compound represented by the formula (II)

$$R^4 + O-R^5 \rightarrow_c C(=O)-OR^6 \qquad (II)$$

wherein R^4 is an alkyl group having 1 to 4 carbon atoms; R^5 is an alkylene group having 2 or 3 carbon atoms; R^6 is an alkyl group having 1 to 3 carbon atoms; and c is 1 or 2.

5,700,861

FLUORORUBBER COATING COMPOSITION AND METHOD FOR MODIFYING SUBSTRATE SURFACE

Nobuyuki Tomihashi, and Kiyotaro Terasaka, both of Osaka, Japan, assignors to Daikin Industries Ltd., Osaka, Japan

PCT No. PCT/JP94/00417, § 371 Date Sep. 14, 1995, § 102(e) Date Sep. 14, 1995, PCT Pub. No. WO94/21729, PCT Pub. Date Sep. 29, 1994

PCT Filed Mar. 16, 1994, Ser. No. 522,338

Claims priority, application Japan, Mar. 17, 1993, 5-056863

Int. Cl.[6] C08F *8/18*

U.S. Cl. 524—344 **18 Claims**

1. A fluororubber coating composition which comprises
(a) a fluororubber having a —CH_2— group in a backbone;
(b) a fluoropolyether fluorooil having a functional group capable of chemically bonding to the fluororubber (a) having the —CH_2— group in the backbone upon heating;
(c) a vulcanizing agent and optionally a vulcanizing aid; and
(d) a medium which is water.

5,700,862

AQUEOUS COATING COMPOSITION

Katsuhiko Sho, Mino; Yasuhiro Shibata, Suita; Keizou Ishii, Ashiya; Tsuyoshi Imamura, Katano, and Kunihiko Takeuchi, Mino, all of Japan, assignors to Nippon Paint Co., Ltd., Osaka, Japan

Continuation-in-part of Ser. No. 255,996, Jun. 8, 1994, abandoned. This application May 26, 1995, Ser. No. 451,491

Claims priority, application Japan, Jun. 11, 1993, 5-140424

Int. Cl.[6] C08K *3/08*

U.S. Cl. 524—403 **9 Claims**

1. An aqueous coating composition comprising:
(A) 10 to 95% by weight, based on solid content, of a film forming polymer which is prepared by neutralizing at least a part of acid groups contained in a copolymer having a number average molecular weight ranging from 6,000 to 50,000 prepared by copolymerizing (A1) 8 to 30% by weight of an amide group-containing ethylenically unsaturated monomer, (A2) 3 to 15% by weight of an acid group-containing ethylenically unsaturated monomer, (A3) 13 to 30% by weight of a hydroxyl group-containing ethylenically unsaturated monomer, and (A4) a remainder amount of ethylenically unsaturated monomers other than the monomers (A1) to (A3); and
(B) 5 to 90% by weight, based on solid content, of an aqueous dispersion of carboxyl group-containing acrylic resin particles having a particle size ranging from 0.01 to 1.0 μm and an acid value ranging from 20 to 80, which is formed from
(B1) 3 to 50% by weight of carboxyl group-containing ethylenically unsaturated monomer selected from the group consisting of styrene derivatives, (meth)acrylic acid derivatives, unsaturated dibasic acids and the mixture thereof; and
(B2) 50 to 97% by weight of ethylenically unsaturated monomer selected from the group consisting of (meth)acrylates having no reactive functional group, polymerizable aromatic compounds, hydroxyl group-containing unsaturated compounds, polymerizable amides, polymerizable nitriles, vinyl halides, α-olefins, vinyl esters, dienes, polymerizable unsaturated monocarboxylic acid esters of polyhydric alcohol, polymerizable unsaturated alcohol esters of polybasic acid, aromatic compounds substituted by two or more vinyl groups, addition products of epoxy group-containing ethylenically unsaturated monomer and carboxyl group-containing ethylenically unsaturated monomer, and the mixture thereof.

5,700,863

POLYIMIDE POLYMERIC BLENDS

Joy Sawyer Bloom, Wilmington, Del., assignor to E. I. Du Pont de Nemours and Company, Wilmington, Del.

Filed Aug. 19, 1996, Ser. No. 697,048

Int. Cl.[6] C08L *79/08*

U.S. Cl. 524—406 **6 Claims**

1. A polymeric blend comprised of
(a) from about 5 to 40% by weight of particulate polyimide which maintains its particulate form at temperatures of less than 400° C. having a mean particle size of about 30 μm or less which is at least about 90% imidized,
(b) from about 40 to 93% by weight of at least one non-fluorine containing thermoplastic polymer which is melt processible at temperatures of less than about 400° C., and
(c) from about 2 to 40% by weight of a lubricant,, such that the amount of components (a), (b) and (c) together make up 100% by weight.

5,700,864

Patent Not Issued For This Number

5,700,865
FLOORING MATERIAL
Eskil Lundquist, Ronneby, Sweden, assignor to Tarkett AG, Frankenthal, Germany
Filed Mar. 22, 1996, Ser. No. 621,025
Claims priority, application Sweden, Sep. 15, 1995, 9503197
Int. Cl.^{6} C08L *83/00*
U.S. Cl. 524—506 **20 Claims**

1. A flooring material, comprising:
30–70 parts by weight of a copolymer of ethylene and an α-olefin having 4–10 carbon atoms,
20–40 parts by weight of polypropylene,
5–20 parts by weight of a crosslinked ethylene polymer,
10–25 parts by weight of an organic filler,
0.2–7 parts by weight of a flame retardant,
0.1–2 parts by weight of an antistatic agent, and
0.1–1 part by weight of a stabiliser,
and that the material is free from inorganic fillers.

5,700,866
CO-CURABLE BASE RESISTANT FLUOROELASTOMER BLEND COMPOSITION
David Leo Tabb, Wilmington, Del., assignor to E. I. Du Pont de Nemours and Company, Wilmington, Del.
Continuation-in-part of Ser. No. 517,865, Aug. 22, 1995, abandoned. This application Jul. 1, 1996, Ser. No. 673,942
Int. Cl.^{6} C08L *27/18;33/06*
U.S. Cl. 524—520 **17 Claims**

1. A co-curable elastomeric blend composition comprising:
(A) at least about 15 percent by weight, based on the total weight of components (A) and (B), of a copolymer comprising copolymerized units of tetrafluoroethylene and an olefin, and having at least about 45 weight percent fluorine; and
(B) at least 5 percent by weight, based on the total weight of components (A) and (B), of at least one ethylene copolymer comprising copolymerized units of
(1) ethylene and
(2) at least one polar comonomer selected from the group consisting of alkyl acrylates and alkyl methacrylates wherein the polar comonomer comprises at least 55–80 percent by weight of said ethylene copolymer;
wherein neither the copolymer of component (A) nor the copolymer of component (B) contains a copolymerized curesite monomer.

5,700,867
AQUEOUS DISPERSION OF AN AQUEOUS HYDRAZINE-TERMINATED POLYURETHANE
Masaaki Ishiyama; Takeaki Matuura; Takashi Mihoya; Shinya Fujimatsu; Masayoshi Utsugi, and Kouichi Iibuchi, all of Tokyo, Japan, assignors to Toyo Ink Manufacturing Co., Ltd., Tokyo, Japan
Continuation-in-part of Ser. No. 316,039, Sep. 30, 1994, abandoned. This application Apr. 29, 1996, Ser. No. 636,275
Claims priority, application Japan, Oct. 1, 1993, 5-246554
Int. Cl.^{6} C08J *3/00;* **C08K** *3/20;* **C08L** *75/00;51/00*
U.S. Cl. 524—539 **16 Claims**

1. An aqueous dispersion of an aqueous polyurethane, consisting essentially of an aqueous polyurethane having ends, said polyurethane comprising an ionic functional group, polyoxyethylene units, and hydrazine functional groups, said hydrazine functional groups consisting of terminal hydrazine fimctional groups linked to the ends of said polyurethane, wherein the content of the ionic functional group is about 5 to about 180 milliequivalent per 100 g of the aqueous polyurethane and the content of the polyoxyethylene units is about 20% by weight or less based on the weight of the aqueous polyurethane, said aqueous polyurethane having no carbonyl functional groups which react with said hydrazine functional groups.

5,700,868
BACK-SIDE COATING FORMULATIONS FOR HEAT-SENSITIVE RECORDING MATERIALS AND HEAT-SENSITIVE RECORDING MATERIALS HAVING A BACK LAYER COATED THEREWITH
Kazuyuki Hanada, Tokyo, Japan, assignor to Dainichiseika Color & Chemicals Mfg. Co., Ltd., and Ukima Colour & Chemicals Mfg. Co., Ltd., both of Tokyo, Japan
Filed Jul. 25, 1995, Ser. No. 506,521
Int. Cl.^{6} C08J *3/00;* **C08K** *3/20;* **C08L** *75/00;* **C08G** *77/04*
U.S. Cl. 524—590 **7 Claims**

1. A back-side coating formulation, which comprises:
in a liquid medium, a reaction product obtained by reacting (a) a polysiloxane compound containing at least one functional group reactive with an isocyanate group, (b) a silane coupling agent containing at least one functional group reactive with an isocyanate group and at least one hydrolyzable silyl group of the formula:

$$(R^1O)_n\text{—}\overset{(R^2)_m}{\overset{|}{Si}}\text{—}X\text{—}Y$$

wherein Y is a functional group selected from the group consisting of amino, epoxy, hydroxyl and thiol, X is a divalent organic group, R^1 is lower alkyl, R^2 is lower alkyl or lower alkoxy, m is 0 or an integer of 1–3 and n=3–m, and (c) a polyisocyanate, said reaction product being free of any free isocyanate group but containing a free hydrolyzable silyl group.

5,700,869
POLYURETHANE COMPOSITIONS HAVING INTERNAL MOLD RELEASE PROPERTIES
James Turnbach, Madison Heights, Mich., assignor to BASF Corporation, Mt. Olive, N.J.
Filed Dec. 14, 1995, Ser. No. 572,466
Int. Cl.^{6} C08K *5/12;5/04;5/54;* **C08J** *9/08*
U.S. Cl. 524—731 **20 Claims**

1. A polyurethane system for use in the preparation of molded polyurethane articles having internal mold release properties, said system comprising:
I.) an isocyanate component; and
II.) an isocyanate reactive polyol component, comprising:
A.) an isocyanate-reactive polyol having a number average molecular weight from 100 to about 10,000; and
B.) an effective amount of an internal mold release composition, comprising:
a.) a polymeric dimethylsiloxane compound; and
b.) a diester functional compound comprising the reaction product of:
(i) an aromatic dicarboxylic acid; and
(ii) a monofunctional alcohol having from 2 to 30 carbons.

5,700,870
COATED AIRBAGS, COATING MATERIAL AND COATING PROCESS
Johann Mueller, Burghausen, and Ingrid Kern, Altoetting, both of Germany, assignors to Wacker-Chemie GmbH, Munich, Germany
Filed Apr. 9, 1996, Ser. No. 631,690
Claims priority, application Germany, Aug. 1, 1995, 195 28 225.6
Int. Cl.^{6} C08L *83/00*
U.S. Cl. 524—837 **8 Claims**

1. An aqueous emulsion consisting essentially of
(1) an organopolysiloxane with SiC-attached vinyl groups in the terminal units, of the formula

$$CH_2{=}CH)_xSiR_{3-x}O(SiR_2O)_nSiR_{3-x}(CH{=}CH_2)_x$$

where
R is an identical or different optionally substituted hydrocarbyl radical,
x is 1, 2 or 3, and
n is a number such that said diorganopolysiloxanes (1) have an average viscosity of 100–500,000 mPa·s at 25° C.
(2) an organopolysiloxane with at least 3 Si-attached hydrogen atoms, of the formula

$$(CH_3)_3SiO\text{—}(SiHRO)_o\text{—}(SiR_2O)_p\text{—}Si(CH_3)_3$$

where
R is an identical or different optionally substituted hydrocarbyl radical
o/p is within the range from 1:0 to 1:20,
(3) a catalyst promoting the addition of Si-attached hydrogen to aliphatic multiple bonds,
(4) an organosilicon adhesion promoter,
(5) a silicone resin,
(6) an emulsifier and
(7) water.

5,700,871
COMPATIBILIZED ELASTOMER BLENDS CONTAINING GRAFTED POLYMERS OF AN ISOOLEFIN AND ALKYLSTYRENE
Palanisamy Arjunan, Houston, Tex., and Donald Andrew White, Princeton, N.J., assignors to Exxon Chemical Patents Inc., Houston, Tex.
Continuation of Ser. No. 49,540, Apr. 19, 1993, abandoned. This application Apr. 17, 1995, Ser. No. 425,323
Int. Cl.^{6} C08L *51/04*
U.S. Cl. 525—74 **21 Claims**

1. A compatibilized elastomeric composition comprising polymers consisting essentially of:
i) an elastomeric copolymer comprising a C_4 to C_7 isomonoolefin and para-alkylstyrene free radically grafted with an unsaturated organic compound selected from the group consisting of unsaturated carboxylic acids, unsaturated carboxylic acid derivatives selected from esters, imides, amides, anhydrides and cyclic acid anhydrides or mixtures thereof,
ii) at least one dissimilar elastomer selected from the group consisting of natural rubber, polyisoprene, polybutadiene, copolymers of butadiene with styrene, copolymers of butadiene with acrylonitrile, butyl rubber, polychloroprene, ethylene/propylene rubber and elastomeric copolymers of ethylene, propylene and a non-conjugated diene.

5,700,872
PROCESS FOR MAKING BLENDS OF POLYOLEFIN AND POLY(ETHYLENE OXIDE)
James Hongxue Wang, and David Michael Schertz, both of Appleton, Wis., assignors to Kimberly Clark Worlwide, Inc., Neenah, Wis.
Filed Dec. 31, 1996, Ser. No. 777,226
Int. Cl.^{6} C08L *71/02*
U.S. Cl. 525—187 **27 Claims**

1. A method for preparing a blend of a modified polyolefin and modified poly(ethylene oxide) comprising melt blending in a single pass extruder an amount of polyolefin, an amount of poly(ethylene oxide), an amount of monomer and a sufficient amount of free radical initiator to modify said polyolefin and said poly(ethylene oxide) by grafting from about 1 percent to 100 percent of said monomer onto said polyolefin and said poly(ethylene oxide), wherein said monomer is selected from the group consisting of 2-hydroxyethyl methacrylate and polyethylene glycol ethyl ether (meth) acrylate.

5,700,873
METHOD OF PREPARATION OF WATER-SOLUBLE COPOLYMER
Michael J. Zajaczkowski, Yoe, and Barbara A. Stutzman, Dover, both of Pa., assignors to Adhesives Research, Inc., Glen Rock, Pa.
Continuation-in-part of Ser. No. 399,876, Mar. 7, 1995, Pat. No. 5,508,367. This application Dec. 14, 1995, Ser. No. 572,000
Int. Cl.^{6} C08F *271/02*
U.S. Cl. 525—283 **29 Claims**

1. A method for the production of water-soluble or water dispersible graft copolymer comprised of one or more water soluble base monomers A and at least one water soluble or water dispersible macromer C, and optionally one or more hydrophobic B monomers, wherein said base monomer A comprises a vinyl monomer capable of forming a hydrophilic polymer, and said C macromer forming polymeric side chains on said graft copolymer, said method comprising the steps of (1) polymerizing to conversion under free radical polymerization conditions from about 15 to 30 percent by weight of the total reaction mixture of said A and B monomers and said macromer in the presence of a first polymerization initiator to produce a first reaction product, said first polymerization initiator under said polymerization conditions of step (1) having a half-life of from about 20 to 60 minutes, and (2) admixing the remainder of the reaction mixture with the product of step (1) and polymerizing to conversion said admixture at free radical polymerization conditions in the presence of a second polymerization initiator having a half-life of at least about 5 hours at said polymerization conditions of step (2), and each said polymerization initiator being present in each of said steps (1) and (2) in an amount within the range of from about 10^{-1} to 10^{-4} moles/liter based on the total volume of the reactants.

5,700,874
ALKOXYSILANE-MODIFIED POLYMER AND ADHESIVE COMPOSITION USING SAID POLYMER
Hideo Takeichi; Yoichi Ozawa; Sei Aoki, all of Kodaira, and Takashi Shimizu, Hachioji, all of Japan, assignors to Bridgestone Corporation, Tokyo, Japan
Filed Aug. 23, 1995, Ser. No. 518,324
Claims priority, application Japan, Aug. 25, 1994, 6-201060
Int. Cl.^{6} C08F *275/00*
U.S. Cl. 525—288 **15 Claims**

1. A polymer modified with an alkoxysilane which is prepared by a reaction forming a bond between an alkoxysilane compound represented by General Formula (I) and at least one of end parts of a conjugated diene/vinylaromatic hydrocarbon copolymer obtained by copolymerization of a conjugated diene and a vinylaromatic hydrocarbon using a lithium compound as an initiator;

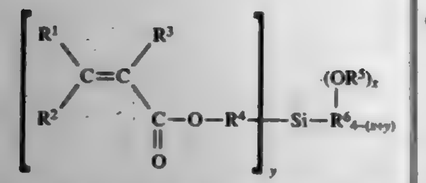

General Formula (I)

wherein R^1, R^2, and R^3 each represent a hydrogen atom or a group selected from the group consisting of an aliphatic, an alicyclic, and an aromatic hydrocarbon group having 1 to 20 carbon atoms, and may be the same or different; R^4 and R^6 each represent a group selected from the group consisting of an aliphatic, an alicyclic, and an aromatic hydrocarbon group having 1 to 20 carbon atoms, and may be the same or different; R^5 represents a group selected from the group consisting of an aliphatic, an alicyclic, and an aromatic hydrocarbon group having 1 to 20 carbon atoms, and OR^5 may be the same or different when a plurality of OR^5 are present; x represents an integer of 1 to 3; y represents an integer of 1 to 3; and x+y represents an integer of 2 to 4.

5,700,875

ADHESIVE COMPOSITION FOR DENTAL TREATMENT

Weiping Zeng; Takashi Yamamoto; Masami Arata, and Tsuyoshi Banba, all of Moriyama, Japan, assignors to Sun Medical Co., Ltd., Moriyama, Japan

Filed May 22, 1995, Ser. No. 445,959

Claims priority, application Japan, May 25, 1994, 6-110673; Oct. 19, 1994, 6-253802

Int. Cl.^{6} A61K *6/08;* **C08F** *765/02*

U.S. Cl. 525—301 **12 Claims**

1. An adhesive composition for dental treatment comprising

(A) 98 to 60 parts by weight of a polymerizable monomer mixture containing 2 to 20% by weight of a monomer having acidic group, said monomer having acidic group being selected from the group consisting of monomers containing sulfonic acid group and monomers containing carboxylic acid group or anhydride thereof,

(B) 2 to 40 parts by weight of a polymer, said polymer being at least one polymer selected from the group consisting of (b1) a copolymer obtained from alkyl (meth)acrylate, a styrene monomer and a hydroxyalkyl (meth)acrylate whose molecule contains at least one hydroxyl group, (b2) a copolymer obtained from alkyl (meth)acrylate and a styrene monomer, (b3) a copolymer obtained from alkyl (meth)acrylate, a styrene monomer and butadiene, (b4) polyvinyl acetate, and (b5) a combination of a polyalkylacrylate and at least one of the polymers (b1), (b2), (b3) and (b4), and

(C) 0.01 to 35 parts by weight of a polymerization initiator,

provided that the total amount of the components (A), (B) and (C) is 100 parts by weight.

5,700,876

THERMOPLASTIC MOLDING MATERIAL

Konrad Knoll, Mannheim, and Hermann Gausepohl, Mutterstadt, both of Germany, assignors to BASF Aktiengesellschaft, Ludwigshafen, Germany

Continuation of Ser. No. 136,950, Oct. 18, 1993, abandoned. This application Sep. 13, 1995, Ser. No. 527,496

Claims priority, application Germany, Oct. 24, 1992, 42 35 978.3

Int. Cl.^{6} C08F *297/02*

U.S. Cl. 525—314 **11 Claims**

1. A process for preparing a thermoplastic molding material made up of from 80 to 50% by weight of a hard matrix of an anionically polymerized aromatic vinyl compound and from 20 to 50% by weight of a soft phase distributed in the hard matrix, said material having a reduced content of residual monomers, which process comprises: anionically polymerizing an aromatic vinyl compound and an alkadiene in a weight ratio of 5:95 to 55:45 in an inert solvent for the aromatic vinyl compound to form a rubber-elastic block copolymer in a first stage,

polymerizing additional aromatic vinyl compound with stirring and with renewed addition of anionic initiator in the presence of the block copolymer produced in the first stage to form the thermoplastic molding material, and thereafter

capping the living chain ends of the molding material.

5,700,877

Patent Not Issued For This Number

5,700,878

PROCESS FOR HYDROGENATING AROMATIC POLYMERS

Dennis A. Hucul, Midland, and Stephen F. Hahn, Sanford, both of Mich., assignors to The Dow Chemical Company, Midland, Mich.

Division of Ser. No. 434,636, May 4, 1995, Pat. No. 5,612,422. This application Apr. 3, 1996, Ser. No. 627,203

Int. Cl.^{6} C08F *8/04*

U.S. Cl. 525—333.3 **2 Claims**

1. A hydrogenated copolymer of styrene and α-methylstyrene prepared by contacting a styrene-α-methylstyrene copolymer with a hydrogenating agent in the presence of a silica supported metal hydrogenation catalyst such that at least 80 percent aromatic hydrogenation is achieved, characterized in that the silica has a surface area of at least 10 m^2/g and a pore size distribution such that at least 98 percent of the pore volume is defined by pores having diameter of greater than 600 angstroms.

5,700,879

FLUORINE-CONTAINING ELASTOMER COMPOSITION

Yuichi Yamamoto; Haruyoshi Tatsu, both of Ibaraki, Japan; Volkova Margarita Alexeevna, Saint Petersburg, Russian Federation; Sokolov Sergey Vasilyevich, Saint Petersburg, Russian Federation, and Veretennikov Nikolai Vladimirovich, Saint Petersburg, Russian Federation, assignors to The Central Synthetic Rubbers Research Institute, Saint Petersburg, Russian Federation, and Nippon Mektron Limited, Tokyo, Japan

Filed Oct. 16, 1995, Ser. No. 543,502

Claims priority, application Japan, Oct. 21, 1994, 6-282940

Int. Cl.^{6} C08F *8/34*

U.S. Cl. 525—353 **3 Claims**

1. A fluorine-containing elastomer composition, which comprises a terpolymer of tetrafluoroethylene, perfluoro(lower alkyl vinyl ether) and cyano group-containing (perfluorovinylether) represented by the following general formula:

$$CF_2{=}CF[OCF_2\,CF(CF_3)]nCN$$

, wherein n is an integer of 1 to 5, and a bis(aminophenyl) compound represented by the following general formula as a cross-linking agent:

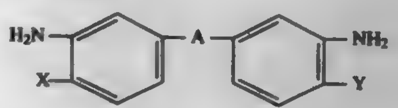

, wherein A is an alkylidene group having 1 to 6 carbon atoms, a perfluoroalkylidene group having 1 to 10 carbon atoms, a SO_2 group, an O group, a CO group or a carbon-carbon bond of directly bonded two benzene rings, and X and Y are a hydroxyl group or an amino group.

5,700,880

PROCESS FOR THE PREPARATION OF POLY(OXYALKYLENE) TERPOLYMER BY HYDROGENATION

Jean-Yves Sanchez, Saint-Ismier; Fannie Alloin, Grenoble, and Jacqueline Masson, Eybens, all of France, assignors to Centre National de la Recherche Scientifique, Paris, France, and Hydro-Quebec, Quebec, Canada

PCT No. PCT/FR94/01432, § 371 Date Sep. 22, 1995, § 102(e) Date Sep. 22, 1995, PCT Pub. No. WO95/15991, PCT Pub. Date Jun. 15, 1995

PCT Filed Dec. 8, 1994, Ser. No. 495,580

Claims priority, application France, Dec. 9, 1993, 93 14775

Int. Cl.^{6} C08L *71/02*

U.S. Cl. 525—403 **20 Claims**

1. A process for the preparation of a copolymer or of a polycondensate whose macromolecular chain consists essentially of solvating units capable of inducing crystallinity into the copolymer or polycondensate, units which decrease the crystallinity of the copolymer or of the polycondensate, and optionally crosslinkable units, all of these units being oxyalkylene units or oxyalkenylene units independently of one another, consisting essentially of:

in a first step, reacting monomers which introduce said solvating units into said copolymers or polycondensate and which induce crystallinity thereinto with carbon-carbon unsaturated monomers, under conditions which do not affect the unsaturation of the unsaturated monomer; and

in a second step, partially hydrogenating the sites of unsaturation in the copolymer or precondensate.

5,700,881

ABRASION-RESISTANT POLYESTER MIXTURE WITH ENHANCED CONSISTENCY OF PROCESSING, MONOFILAMENTS THEREFROM, AND PRODUCTION AND USE THEREOF

Hans Wagner, Bobingen, and Bernd Espenschied, Augsburg, both of Germany, assignors to Hoechst Aktiengesellschaft, Frankfurt, Germany

Filed Mar. 23, 1995, Ser. No. 409,162

Claims priority, application Germany, Mar. 25, 1994, 44 10 399.9

Int. Cl.^{6} C08L *67/02*

U.S. Cl. 525—440 **29 Claims**

1. An abrasion-resistant polyester mixture with enhanced consistency of processing, comprising

from 60 to 95% by weight of a thermoplastic polyester

and from 5 to 40% by weight of a thermoplastic polyurethane wherein the polyester contains

(A) at least 70 mol %, based on the totality of all polyester units, of units derived from aromatic dicarboxylic acids and from aliphatic diols, and

(B) not more than 30 mol %, based on the totality of all polyester units, of dicarboxylic acid and diol units differing from the aromatic units forming the predominant portion of the units and

wherein the polyester has

a melting point within the range from 175° C. to 235° C., the mixture of said polyester and said polyurethane having a melting point between 200° and 230° C. and said polyester mixture has a lost of substances of only about 0.3 percent by weight at a temperature up to not more than 250° C.

5,700,882

COMPOUNDS WITH LIQUID CRYSTALLINE PROPERTIES AND COATING BINDERS BASED THEREON

Frank N. Jones, Ann Arbor, Mich.; Cong Du, Shanghai, China; Ganghui Teng, Fargo, N. Dak.; Adel F. Dimian, Hudson, Wis., and Daozhang Wang, Shanghai, China, assignors to North Dakota State University, Fargo, N. Dak.

Division of Ser. No. 117,146, Sep. 13, 1993, Pat. No. 5,543,475, which is a continuation-in-part of Ser. No. 672,537, Mar. 20, 1991, abandoned. This application Jun. 5, 1995, Ser. No. 461,039

Int. Cl.^{6} C08L *67/02*

U.S. Cl. 525—440 **50 Claims**

1. A dispersion comprising:

an oligomer having a number average molecular weight of not greater than 10,000 and an oligoester adduct having a number average molecular weight of not greater than 10,000 and selected from the group consisting of an amine salt of an oligoester of a general formula I, a mono-oxirane adduct of the oligoester of the general formula I, an amine salt of a carboxylated hydroxyl terminated oligoester of the general formula I, a mono-oxirane adduct of the carboxylated hydroxyl terminated oligoester of the general formula I and mixtures thereof, wherein the general formula I is

$$HO{-}V{-}Al'{-}(W{-}Ar{-}X{-}Al{-}Y)_m{-}Ar'{-}Z{-}OH$$

wherein

V=

$$-\overset{O}{\overset{\|}{C}}-$$

or a covalent bond;

$Al'=(CH_2)_n$ or a covalent bond;

W=

$$-\overset{O}{\overset{\|}{C}}O-,\quad -O\overset{O}{\overset{\|}{C}}-$$

or a covalent bond;

Ar=

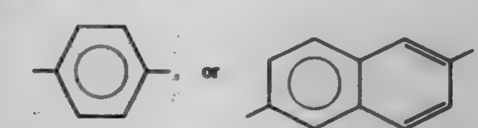

X=

$$-\overset{O}{\overset{\|}{C}}O-\quad \text{or}\quad -O\overset{O}{\overset{\|}{C}}-;$$

$Al=(CH_2)_n$;

Y=

$$-\overset{O}{\overset{\|}{C}}O-,\quad -O\overset{O}{\overset{\|}{C}}-$$

or a covalent bond,

but if X=

$$-O-\overset{O}{\overset{\|}{C}}-$$

and if V=bond, and if Al'=bond,

and if W=bond and if Z=bond, then Y=

$-\overset{O}{\overset{\|}{C}}O-;$

Ar'=

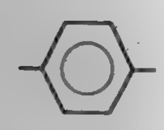

or a covalent bond; and
Z=

$-\overset{O}{\overset{\|}{C}}-$

or a covalent bond
wherein

$\bar{m}$=1 to 20, but when V=bond,

Al'=bond, W=bond and Z=bond, $\bar{m}\geq 2$

n=2 to 20, wherein the oligoester adduct displays two first-order transitions at two different temperatures by differential scanning calorimetry, the oligomer and oligoester adduct in effective amounts for providing upon curing a coating binder having a pencil hardness of at least about 3H and a reverse impact resistance of at least about 60 inch-lbs. at a binder thickness of about 1 mil.

5,700,883

Patent Not Issued For This Number

5,700,884

URETHANE MODIFIED EPOXY RESIN FROM EPOXY PHOSPHATE AND ISOCYANATE PREPOLYMER

Makoto Kokura; Koji Akimoto, and Kazuhiro Urihara, all of Tokyo, Japan, assignors to Asahi Denka Kogyo Kabushiki Kaisha, Tokyo, Japan

Filed Sep. 20, 1995, Ser. No. 530,887

Claims priority, application Japan, Sep. 20, 1994, 6-250215; Jul. 21, 1995, 7-206791

Int. Cl.⁶ C08G *59/14*

U.S. Cl. 525—528 **1 Claim**

1. A urethane-modified epoxy resin containing epoxy groups obtained by reacting 100 parts by weight of a preliminary condensate [A] with from 5 to 60 parts by weight of an isocyanate groups-terminated urethane prepolymer [B] wherein

preliminary condensate [A] is produced by racing (i) an epoxy resin containing an average of two or more epoxy groups and 0.1 or more hydroxy groups per molecule, the hydroxyl equivalent of the epoxy resin is from 0.08 to 0.11 per 100 g. thereof, with (ii) an acid of a phosphorus compound having at least one P—OH group, its salt or ester per molecule, at a ratio of between 0.09 and 0.47 hydroxy group equivalent of the phosphorus compound per one epoxy group equivalent of the epoxy resin,

the isocyanate groups-terminated urethane prepolymer [B] is produced by reacting (i) a polyvalent hydroxy compound with (ii) an organic polyisocyanate compound, and

the equivalent number of hydroxy groups in preliminary condensate [A] is greater than the equivalent number of isocyanate groups in urethane prepolymer [B].

5,700,885

SINGLE SCREW METHOD AND APPARATUS

Hoang T. Pham, Lake Jackson, Tex.; Chad A. Strait, Clinton, Tenn., and Richard O. Kirk, Lake Jackson, Tex., assignors to The Dow Chemical Company, Midland, Mich.

Continuation of Ser. No. 184,510, Jan. 19, 1994, abandoned. This application Oct. 27, 1995, Ser. No. 549,077

Int. Cl.⁶ C08F *283/00*

U.S. Cl. 525—534 **25 Claims**

1. A method of plasticating a mixture of two or more polymeric materials of different bulk density in an extruder with a screw having one flight and two adjacent plasticating sections, comprising the steps of:

(a) compacting a first polymeric material contained in the mixture in a first plasticating section to the extent that its bulk density is approximately equal to that of a second polymeric material contained in the mixture,

(b) compacting the mixture of polymeric materials in a second downstream plasticating section adjacent to the first plasticating section and which has a different compression ratio until all materials are plasticated, and

(c) providing a constant output of plasticated material.

5,700,886

PROCESS FOR THE PREPARATION OF POLYOLEFINS

Andreas Winter, Glashütten; Walter Spaleck, Liederbach, and Bernd Bachmann, Eppstein, all of Germany, assignors to Hoechst Aktiengesellschaft, Frankfurt, Germany

Division of Ser. No. 312,718, Sep. 27, 1994, abandoned. This application May 31, 1995, Ser. No. 454,962

Claims priority, application Germany, Sep. 29, 1993, 43 33 128.9

Int. Cl.⁶ C08F *4/64*

U.S. Cl. 526—119 **10 Claims**

1. Process for the preparation of a polyolefin having a molecular weight distribution $M_w/M_n \geq 3.0$, which may be monomodal, bimodal or multimodal, by polymerization or copolymerization of an olefin of the formula $R^aCH{=}CHR^b$, in which R^a and R^b are identical or different and are a hydrogen atom or an alkyl radical with 1 to 14 C atoms, or R^a and R^b may form a ring system together with the atoms connecting them, at a temperature of 50°–200° C., at a pressure of 0.5 to 100 bar, in solution, in suspênsion or in the gas phase, in the presence of a catalyst which consists of a metallocene mixture and an aluminoxane of the formula II

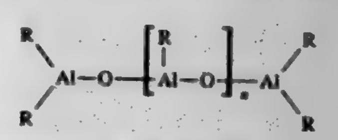

(II)

for the linear type and/or formula III

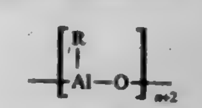

(III)

for the cyclic type, in which the radicals R in formulae II and III may be identical or different and are a C_1–C_6 alkyl group, a C_1–C_6 fluoroalkyl group, a C_6–C_{18} aryl group, a C_1–C_6 fluoroaryl group or hydrogen and n is an integer from 0 to 50, or, instead of the aluminoxane, a mixture of an aluminoxane of the formula II and/or the formula III with an AlR_3 compound, wherein al least two different zirconocenes with at least one zirconocene of the formula I and at least one zirconocene of the formula Ia are used, as the transition metal component,

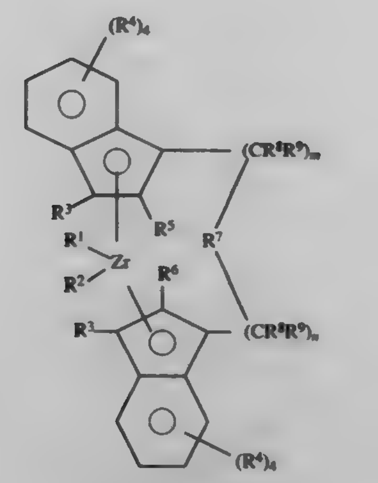

(I)

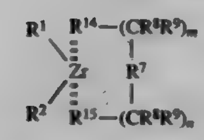

(Ia)

in which

R^1 and R^2 are identical or different and are a hydrogen atom, a C_1–C_{10} alkyl group, a C_1–C_{10} alkoxy group, a C_6–C_{10} aryl group, a C_6–C_{10} aryloxy group, a C_2–C_{10} alkenyl group, a C_7–C_{40} arylalkyl group, a C_7–C_{40} alkylaryl group, a C_8–C_{40} arylalkenyl group or a halogen atom,

R^3 are hydrogen, a halogen atom, a C_1–C_{10} alkyl group, which may be halogenated, a C_6–C_{10} aryl group, a C_2–C_{10} alkenyl group, a C_7–C_{40} arylalkyl group, a C_7–C_{40} alkyloxy group, a C_8–C_{40} arylalkenyl group, an $—NR_2^{10}$, $—OR^{10}$, $—SR^{10}$, $—OSiR_3^{10}$, $—SiR_3^{10}$ or $—PR_2^{10}$ radical, in which R^{10} is a halogen atom, a C_1–C_{10} alkyl group or a C_6–C_{10} aryl group,

R^4 are identical or different and are a hydrogen atom, a halogen atom, a C_1–C_{20} alkyl group, a C_1–C_{20} fluoroalkyl group, a C_6–C_{30} aryl group, a C_6–C_{30} fluoroaryl group, a C_1–C_{20} alkoxy group, a C_2–C_{20} alkenyl group, a C_7–C_{40} arylalkyl group, a C_8–C_{40} arylalkenyl group, a C_7–C_{40} alkylaryl group, an $—NR_2^{10}$, $—OR^{10}$, $—SR^{10}$, $—OSiR_3^{10}$, $—SiR_3^{10}$ or $—PR_2^{10}$ radical, in which R^{10} is a halogen atom, a C_1–C_{10} alkyl group or a C_6–C_{10} aryl group, where at least one R^4 radical(s) per indenyl ring is different from hydrogen, or two or more R^4 radicals form a ring system with the atoms connecting them,

R^5 and R^6 are identical or different and are a halogen atom, a C_1–C_{10} alkyl group, which may be halogenated, a C_6–C_{10} aryl group, a C_2–C_{10} alkenyl group, a C_7–C_{40} arylalkyl group, a C_7–C_{40} alkyloxy group, a C_8–C_{40} arylalkenyl group, an $—NR_2^{10}$, $—OR^{10}$, $—SR^{10}$, $—OSiR_3^{10}$, $—SiR_3^{10}$ or $—PR_2^{10}$ radical, in which R^{10} is a halogen atom, a C_1–C_{10} alkyl group or a C_6–C_{10} aryl group,

R^7 is

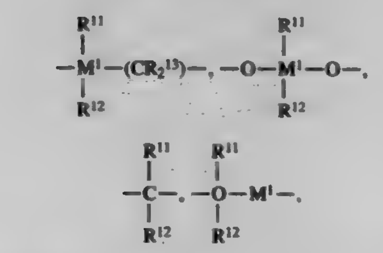

$=BR^{11}$, $=AlR^{11}$, —Ge—, —Sn—, —O—, —S—, =SO, $=SO_2$, $=NR^{11}$, =CO, $=PR^{11}$ or $P(O)R^{11}$,

where

R^{11}, R^{12} and R^{13} are identical or different and are a hydrogen atom, a halogen atom, a C_1–C_{20} alkyl group, a C_1– C_{20} fluoroalkyl group, a C_6–C_{30} aryl group, a C_6–C_{30} fluoroaryl group, a C_1–C_{20} alkoxy group, a C_2–C_{20} alkenyl group, a C_7–C_{40} arylalkyl group, a C_8–C_{40} arylalkenyl group, a C_7–C_{40} alkylaryl group, or R^{11} and R^{12} or R^{11} and R^{13} each form a ring with the atoms connecting them,

M^1 is silicon, germanium or tin,

R^8 and R^9 are identical or different and are a hydrogen atom, a halogen atom, a C_1–C_{20} alkyl group, a C_1–C_{20} fluoroalkyl group, a C_6–C_{30} aryl group, a C_6–C_{30} fluoroaryl group, a C_1–C_{20} alkoxy group, a C_2–C_{20} alkenyl group, a C_7– C_{40} arylalkyl group, a C_8–C_{40} arylalkenyl group, a C_7–C_{40} alkylaryl group, or R^8 and R^9 each form a ring with the atoms connecting them,

R^{14} and R^{15} are identical or different and are monocyclic or polycyclic hydrocarbon radical, which may form a sandwich structure with the zirconium atom and

m and n are identical or different and are zero, 1 or 2, with m plus n being equal to zero, 1 or 2.

5,700,887

PREPARATION OF BRANCHED POLYMERS FROM VINYL AROMATIC MONOMER

Jerry L. Hahnfeld, Midland, Mich.; Timothy G. Bee, Pittsburgh, Pa.; Donald E. Kirkpatrick, Midland, Mich.; La Ho Tung, Oakland, Calif., and William C. Pike, Midland, Mich., assignors to The Dow Chemical Company, Midland, Mich.

Filed Feb. 2, 1996, Ser. No. 595,710

Int. Cl.⁶ C08F *4/46;2/38:12/02*

U.S. Cl. 526—182 **3 Claims**

1. A process for producing branched polymer from a vinyl aromatic monomer comprising:

A) contacting a vinyl aromatic monomer with a difunctional anionic initiator, under conditions such that a dianion macromer is formed,

B) contacting the dianion macromer with a multifunctional coupling agent having at least 3 reactive sites and a difunctional coupling agent, under polymerization conditions such that branches form during polymerization without the formation of gels, and

C) contacting the product of step B with a terminating agent, under conditions such that the reactive sites are terminated.

3. A process for producing branched polymer from a vinyl aromatic monomer comprising:

A) contacting a vinyl aromatic monomer with sodium naphthalene, under conditions such that a dianion macromer is formed,

B) contacting the dianion macromer with a multifunctional coupling agent having at least 3 reactive sites, under polymerization conditions such that branches form during polymerization without the formation of gels, and

C) contacting the product of step B with a terminating agent, under conditions such that the reactive sites are terminated.

5,700,888

SYNTHESIS OF MACROCYCLIC POLYMERS HAVING LOW HYSTERESIS COMPOUNDED PROPERTIES

James E. Hall, Mogadore, Ohio, assignor to Bridgestone Corporation, Tokyo, Japan

Filed Nov. 10, 1996, Ser. No. 743,779

Int. Cl.⁶ C08F *4/50;8/00;36/04*

U.S. Cl. 526—190 **19 Claims**

1. A method for preparing a vulcanizable elastomeric compound having reduced hysteresis properties, comprising the steps of:

forming a solution of one or more unsaturated anionically polymerizable monomers in a solvent;

polymerizing the monomer in the presence of an initiator comprising a cyclic organometallic compound that comprises a

divalent metal atom (Mt) and a reactant (Rct) contained in a ring, having the formula

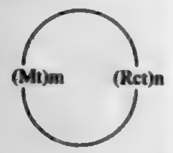

where m and n each independently represent at least one;

terminating the polymerization reaction with a coupling agent; and

adding from about 5 to about 80 parts by weight of a filler selected from the group consisting of silica, carbon black, and mixtures thereof, to form a vulcanizable elastomeric compound.

13. A method of preparing a functionalized macrocyclic polymer having improved hysteresis properties, the polymer formed by the polymerization of at least one unsaturated anionically polymerizable monomer in the presence of an anionic polymerization initiator comprising a cyclic organometallic compound that comprises a divalent metal atom (Mt) and a reactant (Rct) contained in a ring, having the formula

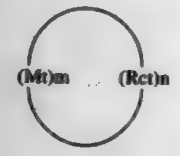

where m and n each individually represent at least one, the improvement comprising terminating the polymerization with a functionalizing agent.

5,700,889

PROCESS FOR POLYMERIZATION OF COPOLYMERS OF TETRAFLUOROETHYLENE AND HEXAFLUOROPROPYLENE

Leslie Mitchell Blair, Parkersburg, W. Va., assignor to E. I. Du Pont de Nemours and Company, Wilmington, Del.

Filed Jul. 12, 1996, Ser. No. 678,920

Int. Cl.[6] C08F *16/24*

U.S. Cl. 526—247 **12 Claims**

1. In the process of copolymerizing tetrafluoroethylene with hexafluoropropylene to form a partially crystalline copolymer having a total unstable fraction of at least 0.3%, said copolymerization being carried out in an aqueous medium in the presence of water soluble initiator, dispersing agent, and optionally chain transfer agent, the improvement comprising carrying out said copolymerization so as to produce said copolymer as polymerized having a total unstable fraction of no more than 0.2%, by

(a) having the amount of said water soluble initiator present such that no more than half of the molecules of said copolymer made are initiated by said initiator,

(b) having the amount of said chain transfer agent present such that chain transfer complements said initiator with respect to initiation of said copolymer molecules made,

(c) having the amount of hexafluoropropylene present so as to counteract the reduction in copolymerization rate caused by (a) and (b), but also causing reduced toughness of said copolymer if this were the only change made to the copolymerization, the amount of hexafluoropropylene incorporated into said copolymer corresponding to HFPI of from 2.0 to 5.0, and

(d) adding fluorinated vinyl ether to said aqueous medium for copolymerization with said tetrafluoroethylene and hexafluoropropylene, in an amount to compensate for the loss of toughness caused by insufficient hexafluoropropylene incorporated into said copolymer, the amount of fluorinated vinyl ether incorporated into said copolymer being from 0.2% to 4% by weight.

5,700,890

IONOMERS BASED ON COPOLYMERS OF ETHYLENE WITH BOTH MONO-AND DICARBOXYLIC ACIDS

Richard Tien-Hua Chou, Wilmington, Del., assignor to E. I. Du Pont de Nemours and Company, Wilmington, Del.

Continuation-in-part of Ser. No. 780,372, Jan. 9, 1997, which is a continuation-in-part of Ser. No. 620,188, Mar. 22, 1996, abandoned. This application Feb. 28, 1997, Ser. No. 807,943

Int. Cl.[6] E08F *222/06*

U.S. Cl. 526—272 **5 Claims**

1. A composition which comprises an ionomer, formed from a partially neutralized acid copolymer precursor, the acid copolymer precursor having polymerized in-chain units derived from the monomers comprising:

(a) ethylene,

(b) 2 to 25 weight percent of (meth)acrylic acid,

(c) 0.1 to 15 weight percent of a dicarboxylic acid monomer selected from the group consisting of maleic acid, fumaric acid, itaconic acid, maleic anhydride, itaconic anhydride, a C_1–C_4-alkyl alkyl half ester of maleic acid, and a mixture of these dicarboxylic acid monomers,

(d) 0–40 weight percent of a C1–C8-alkyl alkyl acrylate,

the ionomer being formed by neutralization of from about 5 to 90 percent of the total number of carboxylic acid units in the copolymer, with metal ions, selected from the group consisting of sodium, zinc, lithium, magnesium, calcium, and a mixture of any of these,

with the proviso that the total of (meth)acrylic acid and dicarboxylic acid monomer is from 4 to 26 weight percent of the acid copolymer precursor, and with the further proviso that the total comonomer content not exceed 50 weight percent of the acid copolymer precursor,

the ionomer having a melt index of from 0.01 to 100 grams/10 minutes.

5,700,891

LOW-ODOR ADHESIVE COMPOSITION COMPRISING (METH) ACRYLATES CONTAINING URETHANE GROUPS

Thomas Huver, Duesseldorf; Carsten Friese, Hamburg; Winfried Emmerling, Neuss; Michael Kux, Monheim, and Kerstin Motzkat, Oberhausen, all of Germany, assignors to Henkel Kommanditgesellschaft auf Aktien, Duesseldorf, Germany

PCT No. PCT/EP94/03848, § 371 Date Jun. 28, 1996, § 102(e) Date Jun. 28, 1996, PCT Pub. No. WO95/14725, PCT Pub. Date Jun. 1, 1995

PCT Filed Nov. 22, 1994, Ser. No. 649,589

Claims priority, application Germany, Nov. 26, 1993, 43 40 095.7

Int. Cl.[6] C08F *26/02*

U.S. Cl. 526—301 **47 Claims**

1. A composition comprising a compound having the formula:

$$[H_2C{=}CR^1{-}C({=}O){-}O{-}R^2{-}O{-}C({=}O){-}NH{-}Q{-}NH{-}C({=}O)]_2[\{{-}O{-}R^{4a}{-}O{-}C({=}O){-}NH{-}Q'{-}NH{-}C({=}O)\}_m{-}O{-}R^{4a}{-}O{-}]$$

wherein:

m is from 0 to 10;

R^1 is hydrogen or a methyl group;

R^2 is selected from the group consisting of linear or branched chain alkylene groups containing from 2 to 6 carbon atoms and polyoxyalkylene groups containing from 4 to 21 carbon atoms;

Q and Q' independently are aromatic, aliphatic or cycloaliphatic groups containing from 6 to 18 carbon atoms which are derived from a diisocyanate or diisocyanate mixtures; and

R^{4a} is derived from a polyesterdiol which is characterized by a weight ratio of carbon to oxygen of greater than 2.6, a weight ratio of carbon to hydrogen of less than 10, and a molecular weight of from 1000 to 20,000; and an activator system for free-radical polymerization of said compound.

5,700,892

FILM-FORMING RESIN AND HAIR COSMETIC COMPOSITION CONTAINING THE SAME

Osamu Takiguchi; Naomi Hori, and Takashi Oda, all of Wakayama, Japan, assignors to Kao Corporation, Tokyo, Japan

Filed Feb. 24, 1997, Ser. No. 805,248

Claims priority, application Japan, Mar. 12, 1996, 8-054790

Int. Cl.[6] C08F *220/54;226/02;216/14;218/02*

U.S. Cl. 526—306 **4 Claims**

1. A film-forming resin which is a copolymer comprising:

(a) 30 mol % to 80 mol % of a (meth)acrylamide monomer represented by the following formula (1):

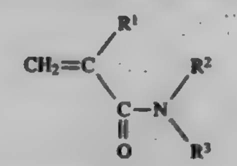

(1)

wherein R^1 represents a hydrogen atom or a methyl group, R^2 and R^3 are the same or different and each independently represents a hydrogen atom or a C_{4-12} alkyl group with the proviso that R^2 and R^3 do not represent a hydrogen atom at the same time;

(b) 2 mol % to 50 mol % of a (meth)acrylamide monomer represented by the following formula (2):

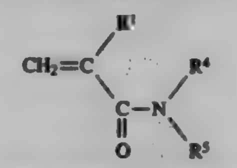

(2)

wherein R^1 has the same meaning as defined above, and R^4 and R^5 are the same or different and each independently represents a hydrogen atom or a C_{1-3} alkyl group;

(c) 0.0001 mol % to 50 mol % of a (meth) acrylate monomer or (meth)acrylamide monomer represented by the following formula (3):

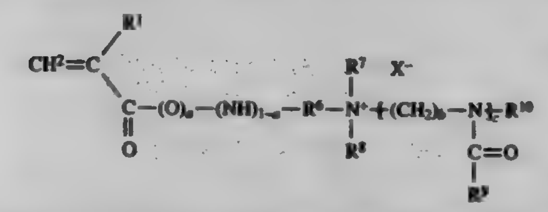

(3)

wherein R^1 has the same meaning as defined above, R^6 represents a C_{2-3} alkylene group, R^7 and R^8 are the same or different and each independently represents a methyl or ethyl group, R^9s are the same or different and each independently represents a C_{1-22} alkyl or phenyl group, R^{10} represents a methyl or ethyl group, a stands for an integer of 0 or 1, b represents an integer of 2 or 3, c represents an integer of 2–10,000 and X^- represents a counterion of a quaternary ammonium salt;

(d) 0 mol % to 40 mol % of a (meth)acrylate monomer represented by the following formula (4):

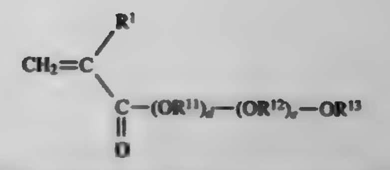

(4)

wherein R^1 has the same meaning as defined above, R^{11} and R^{12} are the same or different and each independently represents a C_{2-4} alkylene group, R^{13} represents a hydrogen atom, a C_{1-10} alkyl group or a phenyl group, d and e each independently represents an integer of 0–50 with the proviso that they do not stand for 0 at the same time; and

(e) 0 mol % to 20.0 mol % of a cross-linkable vinyl monomer.

5,700,893

WATER-SOLUBLE CATIONIC COPOLYMERS AND THEIR USE AS FLOCCULANTS AND DRAINAGE AIDS

Lawrence Lu Kuo, Columbia; Roger Yiming Leung, Ellicott City, and Kenneth Samuel Williams, Baltimore, all of Md., assignors to BetzDearborn Inc., Trevose, Pa.

Continuation-in-part of Ser. No. 309,513, Sep. 20, 1994, abandoned, which is a continuation of Ser. No. 150,293, Nov. 12, 1993, abandoned. This application Apr. 18, 1995, Ser. No. 423,473

Int. Cl.[6] C08F *20/54*

U.S. Cl. 526—307.1 **18 Claims**

1. A water-soluble cationic copolymer comprising a reaction product of N-vinylamide having the general formula:

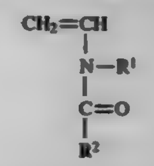

and a cationic quaternary amine having the formula:

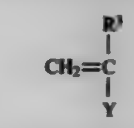

wherein Y is selected from $C({=}O)O(CH_2)_n\ N^{\oplus}R^4R^5R^6X^{\ominus}$, or

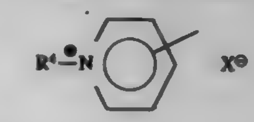

or mixtures thereof, n is 1 to 5; R^1, R^2, R^3 are independently H or C_1 to C_3 alkyl, R^4, R^5 and R^6 are independently C_1 to C_3 alkyl, X is a halide, hydroxyl or alkylsulfate anion.

5,700,894

TRANSPARENT PLASTIC PANE CONTAINING A COPOLYMER OF METHYLMETHACRYLATE AND POLYFUNCTIONAL ACRYLATES

Manfred Krieg, Darmstadt; Christa Weber, Gross-Umstadt, and Peter Szigeti, Buettelborn, all of Germany, assignors to Roehm GmbH Chemische Fabrik, Darmstadt, Germany

Filed Dec. 6, 1995, Ser. No. 568,385

Claims priority, application Germany, Dec. 6, 1994, 44 43 355.7

Int. Cl.[6] C08F *20/18;20/20;* **C08L** *33/12*

U.S. Cl. 526—323.2 **23 Claims**

1. A transparent plastic pane for an aircraft canopy having a residual monomer content of ≦0.5%, a stress corrosion value of at

least 18 N/mm^2, a softening temperature, according to Vicat, of at least 120° C. prior to biaxial stretching or at least 117° C. after biaxial stretching, consisting essentially of a copolymer of methylmethacrylate and polyfunctional acrylates, wherein the content of methylmethacrylate is greater than about 95 wt. % and a content of polyfunctional acrylates is about 0.5 to 5% of the copolymer, which is obtained by a process, which comprises:

a) conducting a first cast polymerization by heating monomer reactants from a temperature of about 40° C. to about 110° C. to 130° C. until about 90% of the monomers used are polymerized, and
b) conducting a final polymerization for at least about 5 hours at a temperature of about 110° C. to 130° C.

5,700,895

ETHYLENE-α-OLEFIN COPOLYMER AND MOLDED ARTICLE THEREOF

Yuji Kanda, Ichihara; Toshiyuki Kokubo, Funabashi; Yufu Sato; Toshio Sasaki, both of Ichihara; Hiroyuki Shiraishi, Sodegaura, and Yuji Shigematsu, Ichihara, all of Japan, assignors to Sumitomo Chemical Company, Limited, Osaka, Japan

Continuation-in-part of Ser. No. 294,941, Aug. 17, 1994, abandoned. This application Dec. 11, 1995, Ser. No. 570,559

Claims priority, application Japan, Aug. 23, 1993, 5-207496

Int. Cl.[6] C08F *210/02*

U.S. Cl. 526—348 **9 Claims**

1. An ethylene-α-olefin copolymer in which (A) a density is 0.870 to 0.945 g/cm^3, (B) a relation between an activation energy of flow Ea (J/mole K) obtained by measurement of viscoelasticity at at least three temperatures in the molten state and a melt flow rate MFR (g/10 min) satisfies the following equation (1):

$$\log Ea \geqq 4.6-0.04 \times \log MFR \quad (1),$$

(C) a coefficient Cx of variation of chemical composition distribution represented by the following equation (2) is 0.40 to 0.80:

$$Cx=\sigma/SCB_{ave} \quad (2)$$

wherein σ is a standard deviation of chemical composition distribution (1/1,000 C) and SCB_{ave} is the average of short chain branchings per 1,000 C (1/1,000 C), (D) a ratio of a weight average molecular weight Mw to a number average molecular weight Mn (Mw/Mn) is 3 to 20, and (F) a ratio (TVR) of trans-vinylene type carbon-carbon double bonds to total carbon-carbon double bonds as determined with an infrared absorption spectrum being 1 to 30%.

5,700,896

POLYMER HAVING LONG ISOTACTIC SEQUENCES AND RANDOMLY-DISTRIBUTED ETHYLENE CONTENT OBTAINED BY POLYMERIZING PROPYLENE IN PRESENCE OF SPECIFIC CATALYSTS

Volker Dolle, Bensheim; Jürgen Rohrmann, Kelkheim; Andreas Winter, Glashutten, and Martin Antberg, Hofheim am Taunus, all of Germany, assignors to Hoechst Aktiengesellschaft, Frankfurt, Germany

Continuation of Ser. No. 192,837, Feb. 7, 1994, abandoned, which is a continuation-in-part of Ser. No. 978,022, Nov. 18, 1992, abandoned, which is a continuation of Ser. No. 387,218, Jul. 28, 1989, abandoned. This application Jun. 7, 1995, Ser. No. 480,542

Claims priority, application Germany, Jul. 30, 1988, 38 26 074.3

Int. Cl.[6] C08F *10/06*

U.S. Cl. 526—351 **13 Claims**

1. An isoblock polymer of propylene with molecular chains containing isotactic sequences which are separated from one another in each case by one monomer unit of opposite configuration, and 0.5 to 10 mol %, based on the total polymer, of randomly distributed units consisting essentially of units of the formula $—(CH_2)_4—$, said isotactic sequences being 3 to 50 monomer units in length.

5,700,897

METHOD FOR MAKING FLUORESCENT POLYMERS

Stanley M. Klainer, San Ramon, Calif.; David R. Walt, Lexington, Mass., and Amos J. Gottlieb, San Francisco, Calif., assignors to Optical Sensors Incorporated, Minneapolis, Minn.

Continuation of Ser. No. 116,978, Sep. 7, 1993, abandoned, which is a division of Ser. No. 848,569, Mar. 9, 1992, abandoned, which is a division of Ser. No. 506,430, Apr. 9, 1990, abandoned, which is a continuation of Ser. No. 4,339, Jan. 16, 1987, abandoned, which is a continuation-in-part of Ser. No. 720,749, Apr. 8, 1985, abandoned. This application May 30, 1995, Ser. No. 453,442

Int. Cl.[6] C08G *77/08*

U.S. Cl. 528—15 **15 Claims**

1. A method for preparing an inherently fluorescent polymeric composition, comprising providing a polymerizable species which when polymerized yields a polymer consisting of siloxane monomer units, and reacting therewith a fluorescent moiety comprising a polynuclear aromatic compound functionalized so as to contain two reactive sites, wherein the polynuclear aromatic compound is selected from the group consisting of perylene, pyrene, fluorescein, and derivatives thereof, thereby providing a polymer which is cross-linked with the fluorescent moiety or contains the fluorescent moiety as a monomer unit.

5,700,898

FLUORINE-MODIFIED SILICONE DERIVATIVE, PRODUCTION THEREOF, AND COSMETIC CONTAINING THE SAME

Jouji Okada, Ichikai-machi; Akira Kawamata, Utsunomiya; Tadayuki Tokunaga, Chiba; Noboru Nagatani, Funabashi; Makoto Torizuka, Kawasaki, and Masahiko Asahi, Tokyo, all of Japan, assignors to Kao Corporation, Tokyo, Japan

Division of Ser. No. 298,868, Aug. 29, 1994, Pat. No. 5,548,054. This application Feb. 23, 1996, Ser. No. 606,339

Claims priority, application Japan, Mar. 10, 1992, 4-51640; Dec. 15, 1992, 4-334143

Int. Cl.[6] C08G *77/24*

U.S. Cl. 528—25 **24 Claims**

1. A fluorine-modified silicone of the formula

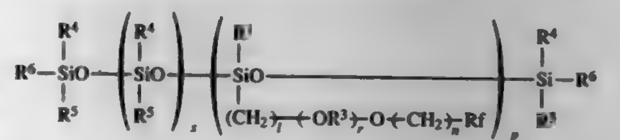

wherein Rf is a perfluoroalkyl group having 6–20 carbon atoms or a ω-H-perfluoroalkyl group represented by the formula $H(CF_2)_t—$ in which t is an integer of 1–20, R^1, R^4, R^5 and R^6 may be identical with or different from each other and individually are a straight-chain or branched saturated aliphatic hydrocarbon group having 1–20 carbon atoms, or an alicyclic or aromatic hydrocarbon group having at least 5–10 carbon atoms, R^3 is a divalent hydrocarbon group having 2–16 carbon atoms,

l is a number of 2–16, n is a number of 1–6, p is a number of 1–200, r is a number of 0–50, and s is a number of 0–200, with the proviso that $p+s \geqq 6$.

5,700,899

CURABLE SILICONE COMPOSITIONS

Shunji Aoki; Toshio Ohba; Yasuaki Hara, and Kunio Itoh, all of Usui-gun, Japan, assignors to Shin-Etsu Chemical Co., Ltd., Tokyo, Japan

Continuation of Ser. No. 490,449, Jun. 14, 1995, abandoned. This application Aug. 12, 1996, Ser. No. 695,525

Claims priority, application Japan, Jun. 15, 1994, 6-156707

Int. Cl.[6] C08G *77/08*

U.S. Cl. 528—37 **11 Claims**

1. A curable silicone composition consisting essentially of an organopolysiloxane having in a molecule at least two structural units represented by the following general formula (1):

$$R_aX_bSiO_{(4-a-b)/2} \quad (1)$$

wherein R is an organic group, letters a and b are integers in the range: $0 \leqq a \leqq 2$, $1 \leqq b \leqq 3$, and $a+b \leqq 3$ and X is a cyclotrisiloxane structure-containing group of formula (2):

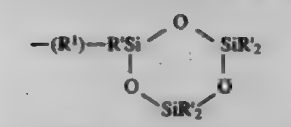

(2)

wherein R' is a monovalent hydrocarbon group or a trialkylsilyloxy group and R^1 is a divalent hydrocarbon group or an oxygen atom, and an onium salt photo-initiator as a curing agent for the organopolysiloxane, said silicone composition being curable by exposure to UV radiation to produce a product having release properties from an adhesive substance.

5,700,900

COPOLYAMIDES WITH LONG-CHAIN POLYAMIDE UNITS

Manfred Hewel, Rodels, and Hans Dalla Torre, Domat/Ems, both of Switzerland, assignors to EMS-Inventa AG, Zürich, Switzerland

Continuation of Ser. No. 172,150, Dec. 23, 1993, abandoned. This application Sep. 15, 1995, Ser. No. 528,860

Claims priority, application Switzerland, Dec. 24, 1992, 03956/92

Int. Cl.[6] C08G *69/26*

U.S. Cl. 528—335 **13 Claims**

1. A copolyamide composition which is transparent, comprising:

at least one copolyamide which includes long-chain monomer building blocks and which is comprised of:

from about 20 to about 96 parts by weight of at least one long-chain monomer (A) which is suitable as a long-chain building block for a polyamide and which includes a lactam having 12 carbon atoms; and

from about 4 to about 80 parts by weight of precursor monomers for semiaromatic polyamides, which precursor monomers comprise at least one diamine (B) and at least two aromatic dicarboxylic acids (C) in which the at least one diamine (B) and the at least two aromatic dicarboxylic acids are in about an equimolar ratio with one another,

wherein the at least two aromatic dicarboxylic acids (C) of the precursor monomers for semiaromatic polyamides are selected from the group consisting of isophthalic acid, terephthalic acid, and naphthalene dicarboxylic acid, and

wherein the at least one diamine (B) of the precursor monomers for semiaromatic polyamides is selected from the group consisting of hexamethylene diamine, 3,3'-dimethyl-4,4'-diamine-dicyclohexylmethane, 4,4'-diamino-dicyclohexyl-2,2-propane, and m-xylene diamine, and

wherein the copolyamide composition has a glass transition temperature ranging from 30° to 130° C. and a tension modulus of elasticity ranging from 1000 to 2300N/mm^2.

5,700,901

RESORBABLE MOULDINGS AND PROCESS FOR PRODUCING THEM

Achim Hurst; Wladis Winkler-Gwienek, both of Tuttlingen; Berthold Buchholz, Ingelheim am Rhein; Dieter Bendix, Ingelheim am Rhein, and Gunther Entenmann, Ingelheim am Rhein, all of Germany, assignors to Boehringer Ingelheim KG, Ingelheim am Rhein, Germany

Continuation of Ser. No. 237,975, May 2, 1994, abandoned, which is a continuation of Ser. No. 65,042, May 27, 1993, abandoned, which is a continuation of Ser. No. 942,534, Sep. 9, 1992, abandoned, which is a continuation of Ser. No. 824,662, Jan. 23, 1992, abandoned, which is a continuation of Ser. No. 535,813, Jun. 8, 1990, abandoned. This application Jan. 11, 1995, Ser. No. 371,313

Claims priority, application Germany, Jun. 9, 1989, 39 18 861.2

Int. Cl.[6] C08G *63/08;* **C08F** *6/00*

U.S. Cl. 528—354 **24 Claims**

1. A process for producing resorbable moldings which comprises feeding a polylactide to an injection molding means operating under pressure and at a cylinder temperature of at least 175° C. to produce a resorbable molding having an inherent viscosity between 0.8 and 4.5 dl/g., an initial tensile strength of at least 45N/mm^2, and an initial bending strength of at least 90 N/mm^2.

5,700,902

BLOCK COPOLYMERS

Lawrence Francis Hancock, Woburn, Mass.; Alan Jay Kishbaugh, Columbia, Md., and Marc Ellous Parham, Bedford, Mass., assignors to Circe Biomedical, Inc., Lexington, Mass.

Filed Jul. 27, 1995, Ser. No. 508,178

Int. Cl.[6] C08G *75/00*

U.S. Cl. 528—373 **7 Claims**

1. A block copolymer having the formula:

$$R—(OCH_2CH_2)_n—X—Y \quad (I)$$

wherein

R is C_{1-20} alkyl, C_{7-20} alkylaryl, C_{7-20} arylalkyl, or C_{1-20} perfluoroalkyl;

n is between 20 and 500;

X is $-Z^1-(OAr^1OAr^2)_m—$ or $—(OAr^2OAr^1)_m—$; and

Y is $—(OAr^3O)-Z^2-(CH_2CH_2O)_p—R^1$ or $—(OAr^4O)—(CH_2CH_2O)_p—R^1$;

in which Z^1 is selected from $—N(R^2)—(SO_2)—C_6H_4—$ and $—N(R^2)—(C{=}O)—C_6H_4—$, R^2 being C_{1-12} alkyl or C_{6-20} aryl;

Z^2 is selected from $—C_6H_4—(SO_2)—N(R^3)—$ and $—C_6H_4—(C{=}O)—N(R^3)—$, R^3 being C_{1-12} alkyl or C_{6-20} aryl;

R^1 is C_{1-20} alkyl, C_{7-20} alkylaryl, C_{7-20} arylalkyl, or C_{1-20} perfluoroalkyl;

each of Ar^1 and Ar^3 is independently selected from 1,4-phenylene, 1,3-phenylene, naphthyl-1,4-diyl, naphthyl-1,5-diyl, 4,4'-biphenylene, diphenyl ether-4,4'-diyl, diphenylthioether-4,4'-diyl, diphenylisopropylidene-4,4'-diyl, diphenylhexafluoroisopropylidene-4,4'-diyl, diphenylalkylene-4,4'-diyl wherein alkylene is $—(CH_2)_q—$, q being 1, 3, 5, 7 or 9, p-terphenyl-4,4'-diyl, and bivalent radicals of binaphthalene, anthracene, and phenylnaphthalene;

each of Ar^2 and Ar^4 is independently selected from diphenylsulfoxide-4,4'-diyl, diphenylsulfone-4,4'-diyl, diphenyl ketone-4,4'-diyl, and bivalent radicals of diphenyl-C_{1-12} alkyl phosphine oxide and diphenyl-C_{6-20} aryl phosphine oxide;

m is between 1 and 250; and

p is between 20 and 500.

5,700,903
BLOCK COPOLYMERS

Lawrence Francis Hancock, Woburn, Mass.; Alan Jay Kishbaugh, Columbia, Md., and Marc Ellous Parham, Bedford, Mass., assignors to Circe Biomedical, Inc., Lexington, Mass.

Division of Ser. No. 508,178, Jul. 27, 1995. This application Apr. 18, 1996, Ser. No. 634,238

Int. Cl.^{6} C08G *75/00*

U.S. Cl. 528—373 **20 Claims**

1. A porous polymer article with a covalently-bonded hydrophilic moiety present on its active surface comprising

a copolymer selected from the group consisting of a hydrophilic-hydrophobic diblock copolymer and a hydrophilic-hydrophobic-hydrophilic triblock copolymer, or a combination of said diblock copolymer and triblock copolymer; and

a hydrophobic polymer;

wherein a hydrophobic moiety of said diblock or triblock copolymer is miscible with and mixes with said hydrophobic polymer to form a polymer matrix, and a covalently-bonded hydrophilic moiety of said diblock or triblock copolymer is present on the active surface of said polymer article.

5,700,904
PREPARATION OF AN ACYLATED PROTEIN POWDER

Jeffrey Clayton Baker; Brian A. Moser, and Warren E. Shrader, all of Indianapolis, Ind., assignors to Eli Lilly and Company, Indianapolis, Ind.

Filed Jun. 7, 1995, Ser. No. 484,220

Int. Cl.^{6} C07K *1/30;1/36;14/62*

U.S. Cl. 530—305 **15 Claims**

1. A process for forming a fatty acid-acylated protein precipitate, which comprises, adjusting the pH of a solution comprising the fatty acid-acylated protein and adding alcohol such that the fatty acid-acylated protein precipitates.

5,700,905
SYNTHETIC SOMATOSTATIN MIMICS

Ralph F. Hirschmann, Blue Bell, Pa.; Rolando A. Spanevello, Rosario, Argentina, and Ruth F. Nutt, Green Lane, Pa., assignors to The Trustees of the University of Pennsylvania, Philadelphia, Pa.

Continuation of Ser. No. 188,594, Jan. 28, 1994, abandoned, which is a continuation of Ser. No. 938,803, Sep. 1, 1992, abandoned. This application Nov. 14, 1994, Ser. No. 338,890

Int. Cl.^{6} A61K *38/12;38/31;* **C07K** *7/64;14/655*

U.S. Cl. 530—311 **23 Claims**

1. A compound having the structure:

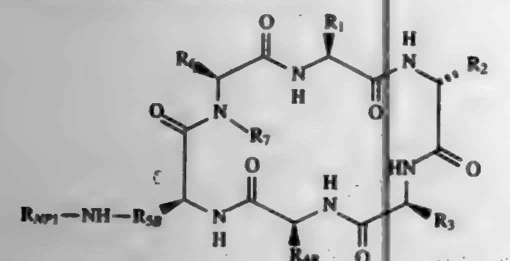

wherein:

R_1 is hydroxybenzyl;

R_2 is —CH_2—(indole);

R_3 is —$(CH_2)_4NHR_{NP2}$, where R_{NP2} is H or an amine protecting group;

$R_{4\beta}$ is $(CH_2)_x$-R_x where x is 0 to 5 and R_x is alkyl having from 1 to 5 carbon atoms, from 0 to 3 oxygen atoms, from 0 to 3 nitrogen atoms, and from 0 to 3 sulfur atoms;

$R_{5\beta}$ is alkyl having from 1 to 14 carbon atoms;

R_{NP1} is H, an amine protecting group, or a solid support; and

R_6 is $(CH_2)_y$-R_y where y is 0 to 5 and R_y is aryl having 3 to 14 carbon atoms, from 0 to 4 oxygen atoms, from 0 to 4 nitrogen atoms, and from 0 to 4 sulfur atoms; and

R_7 is alkyl having 1 to about 3 carbon atoms.

5,700,906
IMMUNOGENIC PEPTIDE ANTIGEN CORRESPONDING TO *PLASMODIUM VIVAX* CIRCUMSPOROZOITE PROTEIN

David E. Arnot; Vincenzo Enea; Ruth S. Nussenzweig, and Victor Nussenzweig, all of New York, N.Y., assignors to New York University, New York, N.Y.

PCT No. PCT/US86/01373, § 371 Date Apr. 9, 1987, § 102(e) Date Apr. 9, 1987, PCT Pub. No. WO87/00533, PCT Pub. Date Jan. 29, 1987

Continuation-in-part of Ser. No. 754,645, Jul. 12, 1985, abandoned. This PCT application Jun. 24, 1986, Ser. No. 43,550

Int. Cl.^{6} C07K *7/08;14/445*

U.S. Cl. 530—324 **5 Claims**

1. A peptide having an amino acid sequence consisting of the sequence Asp-Arg-Ala-X-Gly-Gln-Pro-Ala-Gly repeated from 2 to 18 or more than 19 times wherein X is independently selected from the group consisting of Asp and Ala, said peptide being man-made and isolated form and having the property of eliciting antibodies that recognize the circumsporozoite protein of *Plasmodium vivax*, provided that the peptide is not said circumsporozoite protein.

5,700,907
NUCLEOTIDE SEQUENCES CODING FOR VARIABLE REGIONS OF BETA CHAINS OF HUMAN T LYMPHOCYTE RECEPTORS, CORRESPONDING PEPTIDE SEGMENTS AND THE DIAGNOSTIC AND THERAPUTIC USES

Thierry Hercend, Nogant-sur Marne; Frederic Triebel, Versailles; Sergio Roman-Roman, Paris, and Laurent Ferradini, Paris, all of France, assignors to Roussel Uclaf, France

Continuation of Ser. No. 934,530, Nov. 23, 1992, abandoned. This application Apr. 14, 1995, Ser. No. 423,383

Claims priority, application France, Feb. 12, 1991, 91 01613; Apr. 12, 1991, 91 04523; Feb. 12, 1992, 92 00130

Int. Cl.^{6} C07K *14/725*

U.S. Cl. 530—324 **6 Claims**

1. An isolated nucleic acid coding for a variable region of a β chain of an human T lymphocyte receptor, said nucleic acid having a nucleotide sequence chosen from any one of the nucleotide sequences of SEQ ID NOS: 2 to 6 and 8 to 19.

5,700,908
β_3 INTEGRIN CYTOPLASMIC DOMAIN SPECIFIC PEPTIDE AND NUCLEIC ACID

Erkki I. Ruoslahti, Rancho Santa Fe, Calif., assignor to La Jolla Cancer Research Foundation, La Jolla, Calif.

Division of Ser. No. 240,967, May 10, 1994, Pat. No. 5,498,694, which is a continuation of Ser. No. 973,547, Nov. 9, 1992, abandoned, which is a continuation of Ser. No. 357,024, May 25, 1989, abandoned. This application Jun. 1, 1995, Ser. No. 459,246

Int. Cl.^{6} C07K *14/705;* **C07H** *21/04*

U.S. Cl. 530—324 **2 Claims**

1. A peptide having the amino acid sequence of the cytoplasmic domain of integrin subunit β_3'. KFEEERARAKWDTVRDGAGR-FLKSLV.

5,700,909
PROSAPOSIN AND CYTOKINE-DERIVED PEPTIDES

John S. O'Brien, San Diego, Calif., assignor to The Regents of the University of California, Oakland, Calif.

Continuation-in-part of Ser. No. 100,247, Jul. 30, 1993, Pat. No. 5,571,787. This application Apr. 21, 1994, Ser. No. 232,513

Int. Cl.^{6} C07K *14/52*

U.S. Cl. 530—326 **9 Claims**

1. A peptide consisting of the sequence YVKHQGLNKN-INLDSVDGVP (SEQ ID NO: 2).

5,700,910
N-ACYL-S-(2-HYDROXYALKYL) CYSTEINES, THEIR PREPARATION AND THEIR USE AS INTERMEDIATES FOR THE PREPARATION OF SYNTHETIC IMMUNO-ADJUVANTS AND SYNTHETIC VACCINES

Jörg Metzger; Karl-Heinz Wiesmüller, and Günther Jung, all of Tübingen, Germany, assignors to Hoechst Aktiengesellschaft, Frankfurt am Main, Germany

Continuation of Ser. No. 116,549, Sep. 7, 1993, abandoned, which is a continuation of Ser. No. 898,719, Jun. 15, 1992, abandoned. This application Jun. 7, 1995, Ser. No. 475,437

Claims priority, application Germany, Jun. 17, 1991, 41 19 856.5

Int. Cl.^{6} C07K *1/02;* **C07C** *321/00*

U.S. Cl. 530—338 **2 Claims**

1. A process for the preparation of a compound of formula I

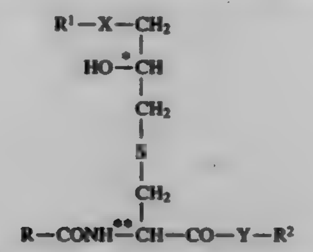 I

in which R is a fluorenylmethoxy, tert-butoxy or benzyl-oxy radical or a saturated or unsaturated, aliphatic or mixed aliphatic/cycloaliphatic hydrocarbon radical having 1 to 21 carbon atoms and optionally substituted by oxo groups or halogen atoms, X is oxygen or methylene, Y is oxygen or an amino acid radical optionally side-chain-protected by a protective group, R^1 is hydrogen, a saturated or unsaturated, aliphatic or mixed aliphatic/cycloaliphatic hydrocarbon radical having 1 to 21 carbon atoms and optionally substituted by oxo groups or halogen atoms, or a radical of the formula, C(O)—R^3 where R^3 is a saturated or unsaturated, aliphatic or mixed aliphatic/cycloaliphatic hydrocarbon radical having 1 to 21 carbon atoms and optionally substituted by oxo groups or halogen atoms, and R^2 is tert-butyl, methyl, ethyl, propyl or benzyl, where the compounds are excluded in which R is a hydrocarbon radical, R_1=H, X=O, Y=O and R_2=tert-butyl; which comprises reducing a compound of formula II

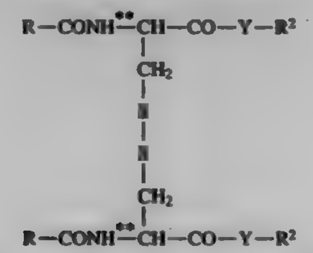 II

with Zn in an HCl/H_2SO_4/solvent mixture and reacting with a compound of formula III,

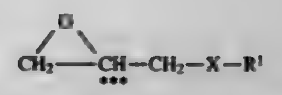 III

where R, R^1 R^2, X and Y are as defined above.

5,700,911
BONE MORPHOGENETIC PROTEIN -11 (BMP-11) COMPOSITIONS

John M. Wozney, and Anthony J. Celeste, both of Hudson, Mass., assignors to Genetics Institute, Inc., Cambridge, Mass.

Division of Ser. No. 247,907, May 20, 1994, Pat. No. 5,639,638, which is a continuation-in-part of Ser. No. 61,464, May 12, 1993, abandoned. This application May 30, 1995, Ser. No. 452,772

Int. Cl.^{6} C07K *14/51*

U.S. Cl. 530—350 **12 Claims**

1. A purified Bone Morphogenetic Protein -11 (BMP-11) polypeptide consisting of the amino acid sequence from amino acid #1 to #109 as set forth in SEQ ID NO:2.

5,700,912

Patent Not Issued For This Number

5,700,913
UNGLYCOSYLATED HUMAN INTERLEUKIN-2 POLYPEPTIDES

Tadatsugu Taniguchi, Tokyo; Masaaki Muramatsu, Tokorozawa; Haruo Sugano, Tokyo; Hiroshi Matsui, Yokohama; Nobukazu Kashima, Yokohama, and Junji Hamuro, Yokohama, all of Japan, assignors to Ajinomoto Co., Inc., and Japanese Foundation for Cancer Research, both of Tokyo, Japan

Continuation of Ser. No. 99,003, Jul. 26, 1993, abandoned, which is a continuation of Ser. No. 561,531, Dec. 15, 1983, abandoned, which is a continuation-in-part of Ser. No. 463,496, Feb. 3, 1983, Pat. No. 4,738,927. This application Oct. 28, 1994, Ser. No. 331,146

Claims priority, application Japan, Dec. 15, 1982, 57-219518; Dec. 24, 1982, 57-229619; Dec. 27, 1982, 57-234607; Dec. 29, 1982, 57-230371; Dec. 29, 1982, 57-230372; European Pat. Off., Feb. 3, 1983, 83101035

Int. Cl.^{6} C07K *14/55;* **C12N** *15/26*

U.S. Cl. 530—351 **5 Claims**

1. A substantially purified, unglycosylated recombinant polypeptide having the amino acid sequence of a human interleukin-2 (IL-2) protein, wherein said human IL-2 protein is encoded by a mRNA molecule present in a human cell which will hybridize to a DNA probe having the coding sequence of the cDNA sequence shown in FIG. 2 in a solution of 50% formamide, 20 mM PIPES, pH 6.5, 0.75M NaCl, 5 mM EDTA, and 0.2% SDS at 37° C. for 18 hours followed by washing three times at 65° C. in a solution of 10 mM PIPES, pH 6.5, 0.15M NaCl, and wherein said polypeptide possesses a biological IL-2 activity by promoting the proliferation of cytotoxic effector T lymphocytes in vitro.

5,700,914

PURIFICATION OF FACTOR VII

Tony Jørgensen, Ballerup, and Anders Hjelholt Pedersen, Lyngby, both of Denmark, assignors to Novo Nordisk A/S, Bagsvaerd, Denmark

PCT No. PCT/DK94/00122, § 371 Date May 25, 1995, § 102(e) Date May 25, 1995, PCT Pub. No. WO94/22905, PCT Pub. Date Oct. 13, 1994

PCT Filed Mar. 24, 1994, Ser. No. 446,671

Claims priority, application Denmark, Mar. 31, 1993, 382/93

Int. Cl.⁶ C07K *3/22;3/28;* **A61K** *35/16*

U.S. Cl. 530—412 **7 Claims**

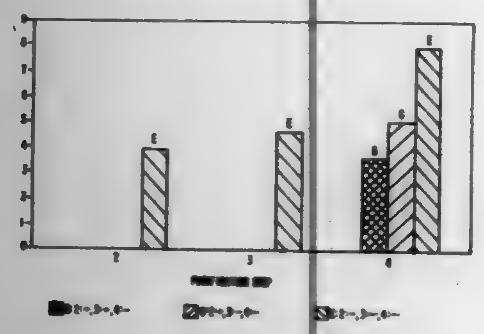

1. A process for controlled activation and controlled degradation of Factor VII during purification of Factor VII whereby a solution of Factor VII is subjected to a number of chromatographic purification steps wherein Zn^{++} is present in at least one of the purification steps.

5,700,915

HUMAN INTERLEUKIN IMMUNOPURIFICATION PROCESSES

John S. Abrams, Belmont, Calif.; Isabelle Chretien, Mornat, France; Frank D. Lee, Palo Alto, Calif., and Michael K. Pearce, Sunnyvale, Calif., assignors to Schering Corporations, Kenilworth, N.J.

Continuation of Ser. No. 215,874, Mar. 21, 1994, abandoned, which is a continuation of Ser. No. 65,516, May 20, 1993, abandoned, which is a continuation of Ser. No. 921,455, Jul. 28, 1992, abandoned, which is a continuation of Ser. No. 782,784, Oct. 24, 1991, abandoned, which is a continuation of Ser. No. 499,327, May 21, 1990, abandoned, which is a continuation-in-part of Ser. No. 113,623, Oct. 26, 1987, Pat. No. 5,041,381, which is a continuation-in-part of Ser. No. 843,958, Mar. 25, 1986, Pat. No. 5,552,304, which is a continuation-in-part of Ser. No. 799,668, Nov. 19, 1985, abandoned. This application Dec. 29, 1994, Ser. No. 366,391

Int. Cl.⁶ C07K *1/22;* **G01N** *33/53*

U.S. Cl. 530—413 **11 Claims**

9. A process for purifying human interleukin-4 (IL-4) from a sample containing it, comprising the steps of:

a) contacting the sample with a monoclonal antibody specific for human IL-4, wherein the antibody is attached to a solid-phase support, thereby binding the human IL-4 to the antibody and extracting it from the sample;

b) washing any unbound sample away from the antibody; and

c) eluting purified human IL-4 from the antibody.

5,700,916

SOLUTION AND SOLID-PHASE FORMATION OF GLYCOSIDIC LINKAGES

Daniel E. Kahne, Princeton; Robert A. Goodnow, Jr., Upper Montclair; Carol M. Taylor, and Lin Yan, both of Princeton, all of N.J., assignors to Trustees of Princeton University, Princeton, N.J.

Continuation-in-part of Ser. No. 198,271, Feb. 18, 1994, which is a continuation-in-part of Ser. No. 21,391, Feb. 23, 1993. This application Jul. 27, 1994, Ser. No. 281,167

Int. Cl.⁶ C07G *3/00;* **C07H** *15/00*

U.S. Cl. 536—1.11 **23 Claims**

1. A compound of the formula (IV):

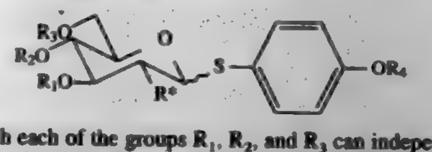

IV

in which each of the groups R_1, R_2, and R_3 can independently be a hydrogen lower alkyl or a hydroxyl protecting group, the group R_4 can be a hydrogen, lower alkyl, a hydroxyl protecting group, a covalent linker moiety, and the group N* is a masked group convertible to an amino group.

5,700,917

ALDEHYDE CATIONIC DERIVATIVES OF GALACTOSE CONTAINING POLYSACCHARIDES USED AS PAPER STRENGTH ADDITIVES

Chung-Wai Chiu, Westfield; Roger Jeffcoat, Bridgewater; Matthew Henley, Somerset, and Leroy Peek, Milford, all of N.J., assignors to National Starch and Chemical Investment Holding Corporation, Wilmington, Del.

Division of Ser. No. 426,808, Apr. 21, 1995, Pat. No. 5,554,745, which is a continuation of Ser. No. 883,319, May 14, 1992, abandoned. This application Apr. 5, 1996, Ser. No. 628,421

Int. Cl.⁶ C08B *37/00*

U.S. Cl. 536—18.7 **7 Claims**

1. An aldehyde cationic polysaccharide derivative wherein the polysaccharide is a naturally occurring galactose containing polysaccharide which is cationized by etherification or esterification reactions and subsequently oxidized by reacting with galactose oxidase to provide an aldehyde group in the C_6 position of the galactose unit of the naturally occurring galactose containing polysaccharide moiety and wherein the aldehyde cationic polysaccharide derivative has a cationic content represented by a DS of from about 0.005 to 1.5 and an aldehyde content represented by a DE of at least 5.

5,700,918

MORANOLINE DERIVATIVE

Akira Hasegawa; Makoto Kiso, both of Gifu, and Yoshiaki Yoshikuni, Uji, all of Japan, assignors to Nippon Shinyaku Co., Ltd., Japan

PCT No. PCT/JP95/00610, § 371 Date Sep. 20, 1996, § 102(e) Date Sep. 20, 1996, PCT Pub. No. WO95/26970, PCT Pub. Date Oct. 12, 1995

PCT Filed Mar. 30, 1995, Ser. No. 718,421

Claims priority, application Japan, Apr. 1, 1994, HEI-6/065300

Int. Cl.⁶ C07H *5/04*

U.S. Cl. 536—18.7 **4 Claims**

1. A moranoline derivative of the following general formula I:

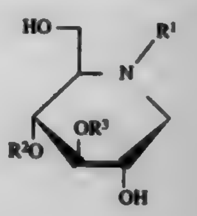

[I]

wherein R^1 represents hydrogen or lower alkyl; R^2 and R^3 are dissimilar and each represents galactopyranosyl or fucopyranosyl, which is substituted by hydroxysulfonyl or a metal salt thereof.

5,700,919

MODIFIED PHOSPHORAMIDITE PROCESS FOR THE PRODUCTION OF MODIFIED NUCLEIC ACIDS

Heinz-Hartmut Seliger, Elchingen-Thalfingen; Sibylle Berner, Augsburg; Klaus Mühlegger, Polling; Herbert Von der Eltz, Weilheim, and Hans-Georg Batz, Tutzing, all of Germany, assignors to Boehringer Mannhiem GmbH, Mannheim, Germany

Continuation of Ser. No. 933,589, Aug. 26, 1992, abandoned, which is a continuation of Ser. No. 528,204, May 24, 1990, abandoned. This application Jan. 10, 1995, Ser. No. 370,836

Claims priority, application Germany, May 24, 1989, 39 16 871.9

Int. Cl.⁶ C07H *1/00;21/00*

U.S. Cl. 536—22.1 **11 Claims**

1. A process for the preparation of an oligonucleotide comprising at least two compounds of formula V

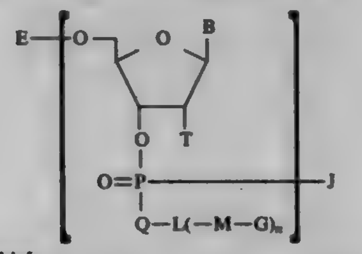

(V)

in which

E is selected from the group consisting of hydrogen and a phosphorous atom in the phosphate residue of an adjacent nucleotide or oligonucleotide;

J is selected from the group consisting of a hydroxyl group or a 5' oxygen atom of the sugar of an adjacent nucleotide or oligonucleotide;

B is a natural or modified nucleobase;

T is selected from the group consisting of hydrogen, hydroxy, lower alkyl, lower alkoxy and azide;

Q is oxygen or sulfur;

L is a (n+1) valent bridging link;

M is selected from the group consisting of oxygen, sulfur, nitrogen and NH;

G is a detectable residue or a residue convertible to a detectable residue;

n is a natural number from 1 to 200;

comprising reacting a nucleotide sequence of formula IX

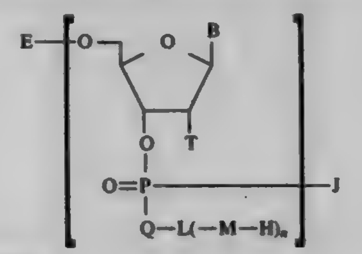

(IX)

wherein

E, J, B, T, Q, L, M and n are as defined above with a compound of formula IV

ZZ-G (IV)

wherein

ZZ is a reactive group, and

G is as defined above.

5,700,920

CARBOCYCLIC NUCLEOSIDES CONTAINING BICYCLIC RINGS, OLIGONUCLEOTIDES THEREFROM, PROCESS FOR THEIR PREPARATION, THEIR USE AND INTERMEDIATES

Karl-Heinz Altmann, Basel; René Imwinkelried, Brig-Glis, and Albert Eschenmoser, Küsnacht, all of Switzerland, assignors to Novartis Corporation, Summit, N.J.

Division of Ser. No. 83,812, Jun. 28, 1993, Pat. No. 5,461,152. This application Jun. 6, 1995, Ser. No. 471,212

Claims priority, application Switzerland, Jul. 1, 1992, 2075/92

Int. Cl.⁶ C12Q *1/68;* **A01N** *43/04;* **C07H** *21/02;19/00*

U.S. Cl. 536—221 **37 Claims**

1. An oligonucleotide of the formula V

5'-U-(O-Y-O-V)$_y$O-Y-O-W-3' (V)

in which U, V and W each are identical or different radicals of natural or synthetic nucleosides and at least one of the radicals U, V, and/or W is a radical of the formulae VI or VIa

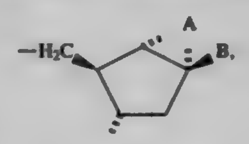

(VI)

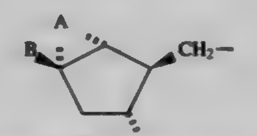

(VIa)

and y is a number from 0 to 200, Y is a nucleotide bridge group, B is a purine or pyrimidine radical or an analogue thereof, and A is —CH_2— or —CH_2CH_2—.

5,700,921

LABELING NUCLEIC ACIDS

Mark E. Westling, San Mateo, and Steven G. Daniel, Sunnyvale, both of Calif., assignors to Vector Laboratories, Burlingame, Calif.

Filed Nov. 27, 1995, Ser. No. 562,650

Int. Cl.⁶ C12Q *1/68;* **C07H** *21/02;19/00*

U.S. Cl. 536—22.1 **9 Claims**

1. A method for modifying a nucleic acid comprising:

a. contacting a nucleic acid with a pro-thiol aryl azide having the structure:

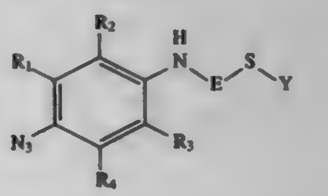

and salts thereof wherein, R_1 to R_4, which may be the same or different, are selected from the group consisting of H, alkyl, nitro, hydroxy, halide, carboxylic acid, methoxy, cyano, and amino groups;

wherein E is a chain of C_1–C_{20} having chain constituents selected from the group consisting of alkyl, alkenyl, alkynyl and heteroatoms, said chain constituents having substituents selected from the group consisting of H, C_1–C_6 alkyl, aryl, ester, ether, amine, amide and halo groups; and

wherein Y is a protecting group for protecting the sulfur moiety from chemical reaction and is removable so as to generate a thiol moiety; and

b. subjecting the nucleic acid and the pro-thiol aryl azide to activation conditions sufficient to cause reaction therebetween resulting in modifying the nucleic acid.

5,700,922

PNA-DNA-PNA CHIMERIC MACROMOLECULES

Phillip Dan Cook, Carlsbad, Calif., assignor to Isis Pharmaceuticals, Inc., Carlsbad, Calif.

Continuation-in-part of Ser. No. 814,961, Dec. 24, 1991, abandoned. This application Nov. 24, 1993, Ser. No. 158,352

Int. Cl.[6] C07H *21/02;21/04*

U.S. Cl. 536—23.1 **23 Claims**

1. A macromolecule of the structure:

PNA-DNA-PNA

wherein:

said DNA of said PNA-DNA-PNA comprises at least one 2'-deoxynucleotide; and

each of said PNAs of said PNA-DNA-PNA comprise at least one peptide nucleic acid subunit having formula (I):

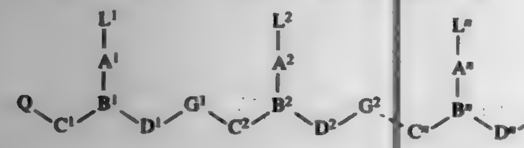

(I)

wherein

n is at least 2,

each of L^1 and L^n is independently selected from the group consisting of hydrogen, hydroxy, $(C_1–C_4)$alkanoyl, nucleobases, aromatic moieties, DNA intercalators, nucleobase-binding groups, heterocyclic moieties, and reporter ligands, at least one of L^1 to L^n being a nucleobase, a DNA intercalator, or a nucleobase-binding group;

each of R^3 and R^4 is independently selected from the group consisting of hydrogen, $(C_1–C_4)$alkyl, hydroxy- or alkoxy- or alkylthio-substituted $(C_1–C_4)$alkyl, hydroxy, alkoxy, alkylthio and amino;

each of C^1 to C^n is $(CR^6R^7)_y$ where R^6 is hydrogen and R^7 is selected from the group consisting of the side chains of naturally occurring alpha amino acids, or R^6 and R^7 are independently selected from the group consisting of hydrogen, $(C_2–C_6)$alkyl, aryl, aralkyl, heteroaryl, hydroxy, $(C_1–C_6)$alkoxy, $(C_1–C_6)$alkylthio, NR^3R^4 and SR^5, where R^3 and R^4 are as defined above, and R^5 is hydrogen, $(C_1–C_6)$alkyl, hydroxy-, alkoxy-, or alkylthio-substituted $(C_1–C_6)$alkyl, or R^6 and R^7, together, are alicyclic or heterocyclic;

each of D^1 to D^n is $(CR^6R^7)_z$ where R^6 and R^7 are as defined above;

each of y and z is zero or an integer from 1 to 10, the sum y+z being greater than 2 but not more than 10;

each of G^1 to G^{n-1} is $—NR^3CO—$, $—NR^3CS—$, $—NR^3SO—$ $—NR^3SO_2—$, $—CONR^3—$, $—CSNR^3—$, $—SONR^3—$ or $—SO_2NR_3—$ where R^3 is as defined above;

each pair of A^1 to A^n and B^1 to B^n are selected such that:

(a) A is a group of formula (IIa), (IIb) or (IIc) and B is N or R^3N^+; or

(b) A is a group of formula (IId) and B is CH;

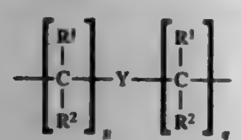

(IIa)

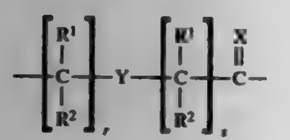

(IIb)

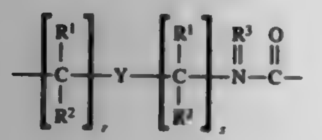

(IIc)

-continued

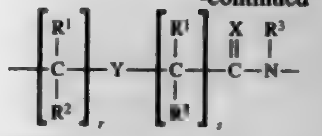

(IId)

where:

X is O, S, Se, NR^3, CH_2 or $C(CH_3)_2$;

Y is a single bond, O, S or NR^4;

each of p and q is zero or an integer from 1 to 5, the sum p+q being not more than 10;

each of r and s is zero or an integer from 1 to 5, the sum r+s being not more than 10;

each R^1 and R^2 is independently selected from the group consisting of hydrogen, $(C_1–C_4)$alkyl which may be hydroxy- or alkoxy- or alkylthio-substituted, hydroxy, alkoxy, alkylthio, amino and halogen;

Q is $—CO_2H$, $—CONR'R''$, $—SO_3H$ or $—SO_2NR'R''$ or an activated derivative of $—CO_2H$ or $—SO_3H$; and

I is $—NR'''R''''$ or $—NR'''C(O)R''''$;

where:

R', R'', R''', and R'''' are independently selected from the group consisting of hydrogen, alkyl, amino protecting groups, reporter ligands, intercalators, chelators, peptides, carbohydrates, lipids, steroids, nucleosides, nucleotides, nucleotide diphosphates, nucleotide triphosphates, oligonucleotides, oligonucleosides and soluble and non-soluble polymers, provided that at least one R' is said DNA of said PNA-DNA-PNA and at least one R'''' is said DNA of said PNA-DNA-PNA.

5,700,923

FINDERONS AND METHODS OF THEIR PREPARATION AND USE

John Goodchild, Westborough, and Thomas E. Leonard, Marlboro, both of Mass., assignors to Hybridon, Inc., Cambridge, Mass.

Filed Sep. 29, 1994, Ser. No. 315,287

Int. Cl.[6] C07H *21/00*

U.S. Cl. 536—23.1 **16 Claims**

1. A finderon comprising:

(a) a first flanking region comprising from four to fifteen contiguous, covalently-linked nucleotides, at least a portion of the first flanking region being complementary to a first target region located at a 3' position of a cleavage site on a substrate RNA molecule;

(b) a second flanking region comprising from four to fifteen contiguous, covalently-linked nucleotides, at least a portion of the second flanking region being complementary to a second target region located at a 5' position of the cleavage site; and

(c) a rigid linker covalently bound to a 3' terminus of the first flanking region and to a 5' terminus of the second flanking region and comprising from one to twelve non-nucleotidic units capable of maintaining the cleavage site in a trigonal bipyramidal transition state conformation,

wherein the non-nucleotidic units are selected from the group consisting of a cyclohexane diol, a steroid; a lupene diol, an isosorbide, and combinations thereof and a linear distance of about 15 to 30 angstroms is established between the first and second flanking regions.

5,700,924

SERPIN DERIVED FROM HUMAN HYPOTHALAMUS

Scott Michael Braxton, San Mateo; Dinh Diep, San Francisco, and Susan G. Stuart, Montara, all of Calif., assignors to Incyte Pharmaceuticals, Inc., Palo Alto, Calif.

Filed Jun. 7, 1995, Ser. No. 487,823

Int. Cl.[6] C12N *15/85;15/63;* **C07H** *21/04;* **C12P** *19/34*

U.S. Cl. 536—23.1 **6 Claims**

1. An isolated and purified polynucleotide having a sequence which encodes a protein consisting of the amino acid sequence of SEQ ID NO: 2.

5,700,925

DNA ENCODING STATIONARY PHASE, STRESS RESPONSE SIGMA FACTOR FROM *MYCOBACTERIUM TUBERCULOSIS*

William R. Bishai, Baltimore, Md.; Douglas B. Young, London, United Kingdom; Ying Zhang, Baltimore, Md., and James DeMaio, Tacoma, Wash., assignors to The Johns Hopkins University, Baltimore, Md.

Filed Mar. 27, 1996, Ser. No. 622,353

Int. Cl.[6] C07H *21/02;21/04;* **C12N** *9/00*

U.S. Cl. 536—23.1 **6 Claims**

2. An isolated and purified subgenomic DNA segment encoding a *M. tuberculosis* sigma factor sigF as shown in SEQ ID NO:2.

5,700,926

MOLECULAR CLONING OF THE ANHIDROTIC ECTODERMAL DYSPLASIA GENE

Juha Kere, Espoo, Finland; David Schlessinger, University City, Mo.; Albert de la Chapelle, Helsinki, Finland, and Anand Kumar Srivastava, Greenwood, S.C., assignors to Washington University, St. Louis, Mo.

Continuation-in-part of Ser. No. 52,997, Apr. 27, 1993, Pat. No. 5,556,786. This application Jul. 22, 1996, Ser. No. 684,672

Int. Cl.[6] C12N *15/09;* **C07H** *21/04*

U.S. Cl. 536—23.1 **5 Claims**

1. A human anhidrotic ectodermal dysplasia (EDA) gene as an isolated nucleic acid molecule.

5,700,927

TBC1 GENE AND USES THEREOF

Leonard Zon, Wellesley, and Paul Richardson, Boston, both of Mass., assignors to The Children's Medical Center Corporation, Boston, Mass.

Filed Dec. 23, 1994, Ser. No. 363,300

Int. Cl.[6] C12N *15/12;* **C07K** *14/475*

U.S. Cl. 536—23.5 **3 Claims**

1. A substantially pure DNA encoding a Tbc1 polypeptide having an amino acid sequence as set forth in SEQ ID NO: 2.

5,700,928

POLYNUCLEOTIDE ENCODING SALIVA BINDING PROTEIN

John Edward Hodgson, Malvern, and Martin Karl Russell Burnham, Norristown, both of Pa., assignors to SmithKline Beecham, p.l.c., Brentford, England

Filed Oct. 15, 1996, Ser. No. 729,202

Claims priority, application United Kingdom, Oct. 16, 1995, 9521147; Mar. 4, 1996, 9604599; Aug. 1, 1996, 9616136

Int. Cl.[6] C07H *21/04;* **A61K** *39/40;39/085*

U.S. Cl. 536—23.7 **36 Claims**

1. An isolated polynucleotide encoding a first polypeptide having at least 70% identity to a second polypeptide of SEQ ID NO: 1 wherein said first polypeptide is capable of generating antibodies having binding specificity for said second polypeptide.

5,700,929

BASE FOR COATING SOLID ENTERIC PHARMACEUTICAL PREPARATIONS

Hiroyasu Kokubo, and Katsuyoshi Minemura, both of Nakakubiki-gun, Japan, assignors to Shin-Etsu Chemical Co., Ltd., Japan

Filed Apr. 29, 1996, Ser. No. 638,589

Claims priority, application Japan, May 1, 1995, 7-107347

Int. Cl.[6] C08B *3/00;* **A61K** *9/28*

U.S. Cl. 536—63 **6 Claims**

1. A base for coating solid enteric pharmaceutical preparations having a dissolution pH ranging from 3.5 to 4.5 essentially consisting of hydroxypropylmethyl cellulose trimellitate obtained by substituting water-soluble hydroxypropylmethyl cellulose having 1.1 to 1.6 methoxy group per glucose ring thereof, with 0.2 to 1.0 trimellitate group per glucose ring.

5,700,930

4-SUBSTITUTED AZETIDINONES AS PRECURSORS TO 2-SUBSTITUTED-3-CARBOXY CARBAPENEM ANTIBIOTICS AND A METHOD OF PRODUCING THEM

Gregg Brian Feigelson, Airmont; William V. Curran, and Carl Bernard Ziegler, both of Pearl River, all of N.Y., assignors to American Cyanamid Company, Madison, N.J.

Division of Ser. No. 295,329, Aug. 24, 1994, which is a division of Ser. No. 163,259, Dec. 7, 1993, Pat. No. 5,371,215, which is a continuation-in-part of Ser. No. 842,862, Feb. 27, 1992, abandoned, which is a continuation-in-part of Ser. No. 672,496, Mar. 20, 1991, Pat. No. 5,189,158. This application Apr. 12, 1995, Ser. No. 420,955

Int. Cl.[6] C07D *205/08;477/00;409/06;463/00*

U.S. Cl. 540—200 **1 Claim**

1. A compound of the formula:

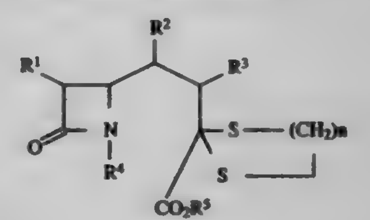

wherein:

n is 1 or 2;

R^1 is hydrogen, hydroxy(lower)alkyl or protected hydroxy(lower)alkyl;

R^2 is selected from the group consisting of hydrogen and $(C_1–C_6)$alkyl;

R^3 is halogen, azido, nitro, cyano, a suitable leaving group selected from $OCOCH_3$, $OCOCF_3$, OSO_2CH_3, OSO_2Phenyl, OP(O)(OPhenyl)$_2$; a moiety of the formula $—S(O)_iR^a$, wherein i=0, 1 or 2 and R^a is selected from hydrogen, $(C_1–C_6)$alkyl, $(C_3–C_7)$cycloalkyl, $(C_2–C_6)$ alkenyl, $(C_2–C_6)$alkynyl, aryl, aryl$(C_1–C_6)$alkanoyl, arylcarbonyl; any of such groups being optionally substituted by $(C_1–C_6)$alkyl, amino, $(C_1–C_6)$alkanoylamino, hydroxy, $(C_1–C_6)$alkoxy, mercapto, $(C_1–C_6)$alkylthio, sulphamoyl, carbamoyl, amidino, guanidino, nitro, fluoro, chloro, bromo, carboxy and salts and esters thereof, $(C_1–C_6)$alkanoyloxy, and arylcarbonyl;

moieties of the formulas $—NR^hR^i$, $—N(R^h)OR^i$, $—N(R^h)NR^hR^i$,

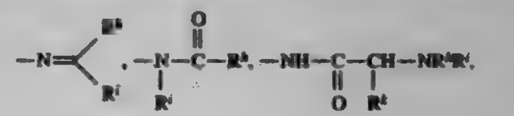

-continued

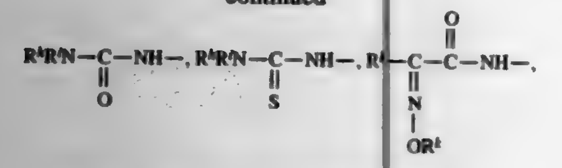

$-NHSO_2R^k$, $-N\equiv C$, $-NCO$, $R^hR^iP(O)NH-$,

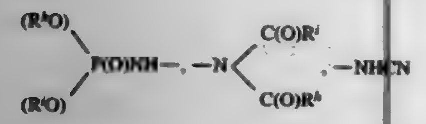

$-NHP(O)R^h(OR^i)$

where R^h R^i are independently selected from hydrogen; substituted or unsubstituted (C_1-C_4)alkyl and cycloalkyl having from 1 to 6 carbon atoms, aryl, wherein the substituents are selected from the group consisting of amino, hydroxyl, carboxyl, alkoxyl, $-SO_2NH_2$, phenyl, benzyl, and alkoxylcarbonyl; wherein R^k is selected from hydrogen, substituted or unsubstituted (C_1-C_3)alkyl, and (C_2-C_6)alkenyl wherein the substituents on R^k are selected from amino, hydroxyl, carboxyl, fluoro, SO_2NH_2, carboxamido and alkoxycarbonyl; moieties of the formulae:

$-P(O)(OR^i)(OR^h)$, $-P(O)(NR^hR^i)_2$

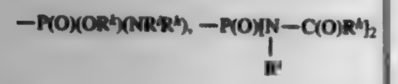

$-P(O)(OR^k)(NR^iC(O)R^h)$

where R^h, R^i and R^k are as hereinabove defined; moieties of the formulae:

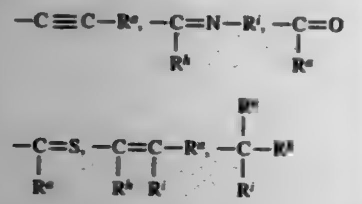

$-CH_2NR^iR^h$, $-CH_2N(R^h)OR^i$, $CH_2N(R^k)NR^hR^i$, $-CH_2-F$, $-CH_2Cl$, $-CHF_2$, $-CH_2Br$, $-CH_2I$, $-CH_2OCOCH_3$, $-CH_2N(R^i)C(O)R^i$, $-CH_2-N(R^k)C(O)NR^hR^i$, $-CH_2-C(NOR^k)C(O)NR^hR^i$, $-CH_2NHSO_2R^k$, $CH_2NHP(O)(OR^1)(OR^h)-CH_2P(O)(OR^i)(OR^h)$, $-CH_2P(O)(NR^hR^i)$, $-CHR^kNR^iR^h$, $-CHR^kN(R^h)OR^i$, $-CHR^kN(R^k)NR^hR^i$, $-CHCl_2$, $-CHR^kN(R^k)C(O)NR^hR^i$, $-CHR^kC(NOR^k)C(O)NR^hR^i$, $-CHR^kNHSO_2R^k$, $-CHR^kNHP(O)(OR^i)(OR^h)$, $-CHR^kP(O)(OR^i)(OR^h)$ wherein R^e, R^k, R^i and R^h are hereinabove defined;

R^4 is hydrogen or a removable protecting group for an amide nitrogen;

R^5 is hydrogen or a removable protecting group for a carboxylic acid.

5,700,931

7-SUBSTITUTED-2-OXA[3.2.0]HEPTAN-6-ONE COMPOUND AND METHOD FOR THE PREPARATION THEREOF

Yoichi Taguchi; Akihiro Oishi; Isao Shibuya, and Tohru Tsuchiya, all of Tsukuba, Japan, assignors to Japan as represented by Director General of Agency of Industrial Science and Technology, Japan

Division of Ser. No. 396,778, Mar. 1, 1995, Pat. No. 5,550,230. This application May 29, 1996, Ser. No. 654,521

Claims priority, application Japan, Mar. 8, 1994, 6-65500

Int. Cl.[6] C07D *491/048;* A61K *31/395*

U.S. Cl. 540—203 **2 Claims**

1. A method for the preparation of a β-lactam compound which is a 7-substituted-2-oxa-7-azabicyclo[3.2.0] heptan-6-one represented by the formula

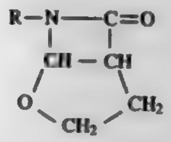

in which R is a monovalent member selected from the group consisting of alkyl, cycloalkyl, aryl, halogen-substituted aryl and alkaryl, which comprises the step of:

reacting a mixture of an isocyanate compound represented by the formula

RNCO

in which the symbol R has the same meaning as defined above, and 2,3-dihydrofuran.

5,700,932

PROCESS FOR PREPARING CEPHEM DERIVATIVE

Kwang Hyuk Lee, Sungnam; Seung Sub Choi, Seoul, and Myeong Sik Yoon, Kyungki-do, all of Rep. of Korea, assignors to Cheil Jedang Co., Seoul, Rep. of Korea

Filed Sep. 24, 1996, Ser. No. 719,068

Claims priority, application Rep. of Korea, Jul. 19, 1996, 96-29394

Int. Cl.[6] C07D *513/04*

U.S. Cl. 540—223 **5 Claims**

1. A process for preparing a compound of the following formula (I):

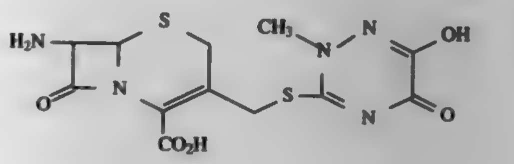

(I)

by reacting a compound of the following formula (II):

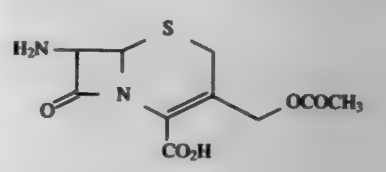

(II)

with a compound of the following formula (III):

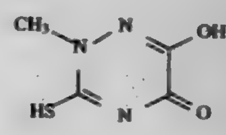

(III)

in the presence of boron trifluoride or a complex compound thereof in acetonitrile solvent, characterized in that the crystal of the compound of formula (I) is separated and purified by adding water and other organic solvent to the reaction mixture and adjusting the pH thereof to 3.5 to 3.7 with a base.

5,700,933

CHIRAL INTERMEDIATES FOR THE PREPARATION OF CARBACEPHEMS

Jack W. Fisher; Lowell D. Hatfield; Richard C. Hoying, and James E. Ray, all of Indianapolis, Ind., assignors to Eli Lilly and Company, Indianapolis, Ind.

Division of Ser. No. 837,173, Feb. 18, 1992, Pat. No. 5,521,307. This application May 18, 1995, Ser. No. 444,123

Int. Cl.[6] C07D *471/04;413/04;* C07B *43/04*

U.S. Cl. 540—364 **19 Claims**

1. A compound of the formula:

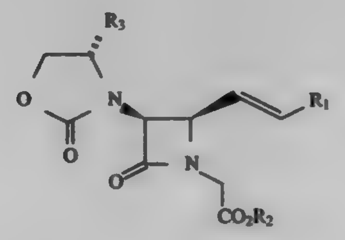

in which:

R_1 is selected from the group consisting of 2-furyl, naphthyl, phenyl and phenyl substituted with 1, 2 or 3 substituents selected from C_1–C_6 alkyl, C_1–C_6 alkoxy, C_1–C_6 alkylthio, nitro, halo, carboxy and carbamoyl;

R_2 is a carboxy protecting group or hydrogen; and

R_3 is selected from the group consisting of phenyl, C_1–C_4 alkylphenyl, halophenyl, C_1–C_4 alkoxyphenyl, naphthyl, thienyl, furyl, benzothienyl and benzofuryl.

6. A compound of the formula:

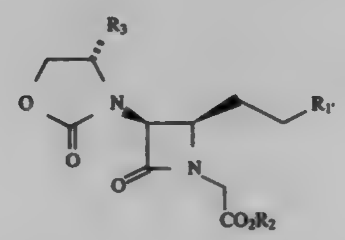

in which:

R_1, is selected from the group consisting of 2-furyl, naphthyl, phenyl, phenyl substituted with 1, 2 or 3 substituents selected from C_1–C_6 alkyl, C_1–C_6 alkoxy, C_1–C_6 alkylthio, nitro, halo, carboxy and amido, and a carboxylic acid derivative having a leaving group, the carboxylic acid derivative being selected from $COOR_4$ and $COSR_4$, in which OR_4 and SR_4 are leaving groups and in which R_4 is selected from C_1–C_6 alkyl, C_2–C_6 alkenyl, phenyl or phenyl substituted with 1, 2 or 3 substituents selected from C_1–C_6 alkyl, C_1–C_6 alkoxy, C_1–C_6 alkylthio, nitro, halo, carboxy and amido;

R_2 is a carboxy protecting group or hydrogen; and

R_3 is selected from the group consisting of phenyl, C_1–C_4 alkylphenyl, halophenyl, C_1–C_4 alkoxyphenyl, naphthyl, thienyl, furyl, benzothienyl and benzofuryl.

5,700,934

PROCESS FOR THE PREPARATION OF EPSILON-CAPROLACTAM AND EPSILON-CAPROLACTAM PRECURSORS

Henricus F. W. Wolters, Echt, Netherlands; Samuel L. Lane, Beaumont, Tex.; Wim Buijs, Schinnen; Nicolaas F. Haasen, Sittard, both of Netherlands, and Frank E. Herkes, Wilmington, Del., assignors to DSM N.V., Heerlen, Netherlands, and E. I. DuPont de Nemours & Company, Wilmington, Del.

Continuation-in-part of Ser. No. 396,240, Mar. 1, 1995, abandoned, and Ser. No. 565,594, Nov. 30, 1995, abandoned. This application Mar. 15, 1996, Ser. No. 616,742

Int. Cl.[6] C07D *201/08*

U.S. Cl. 540—538 **14 Claims**

1. A process for the preparation of ε-caprolactam and ε-caprolactam precursor, starting from the corresponding 5-formylvalerate ester, ammonia and hydrogen in the presence of a hydrogenation catalyst, comprising the combination of steps of:

(a) reacting said 5-formylvalerate ester with ammonia under non-hydrogenating conditions to obtain a reaction product; and

(b) converting the reaction product obtained in step (a) to ε-caprolactam and the ε-caprolactam precursor(s) under hydrogenating conditions in the presence of ammonia.

5,700,935

CARBODIIMIDE DERIVATIVE

Soichiro Takenishi, Tokyo; Osamu Suzuki, Kasukabe; Hirohiko Yokomizo, Soka; Tatsuo Ichihara; Gen Masuda, both of Tokyo; Namiko Nakajima, Misato, and Kazuko Komiya, Tokyo, all of Japan, assignors to Nisshinbo Industries, Inc., Tokyo, Japan

Filed Dec. 22, 1995, Ser. No. 577,374

Claims priority, application Japan, Dec. 22, 1994, 6-335492

Int. Cl.[6] C07D *495/04*

U.S. Cl. 544—139 **6 Claims**

1. A carbodiimide derivative represented by the following general formula (I)

$$W_1—X—N=C=N—Y—W_2—Z \quad (I)$$

wherein W_1 is a tertiary amino group or a tertiary or quaternary ammonium group, represented by the following formula:

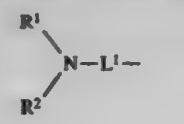

(b)

or

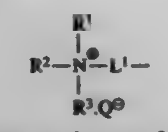

(c)

wherein R^1 and R^2 are each independently a straight chain, branched chain or cyclic saturated or unsaturated C_1–C_{10} aliphatic hydrocarbon group or a substituted or unsubstituted aryl or aralkyl group; R^3 is a hydrogen atom, a straight chain, branched chain or cyclic saturated or unsaturated C_1–C_{10} aliphatic hydrocarbon group, a substituted or unsubstituted aryl or aralkyl group, or a biotin group of the formula (a)

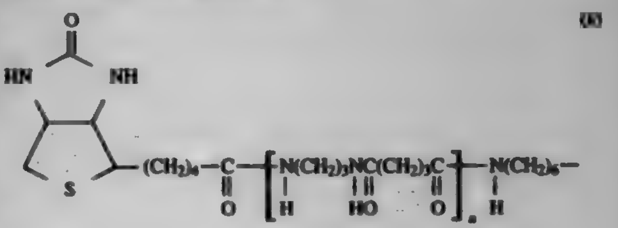

(a)

wherein n is 0 or 1; L^1 is a single bond or an o-, m- or p-phenylene group which may be substituted with at least one C_1–C_{10} alkyl group; Q^- is a counter anion; —W_2—Z is a quaternary ammonium group represented by the following formula (g):

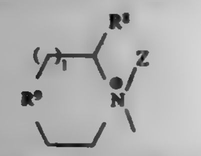

(g)

wherein R^8 is a hydrogen atom or R^6; R^6 is a straight chain, branched chain or cyclic saturated or unsaturated C_1–C_{10} aliphatic hydrocarbon group or a substituted or unsubstituted aryl or aralkyl group; Z is a biotin group of the formula (a) as defined above; R^9 is an oxygen atom or a methylene group; l is 0 or 1; and X and Y are each independently a single bond or an alkylene group whose main chain has 1–20 carbon atoms and which may have at least one branch having 24 or less carbon atoms.

5,700,936

PROCESS FOR PREPARING A 2-(2-AMINO-1,6-DIHYDRO-6-OXO-PURIN-9-YL) METHOXY-1,3-PROPANEDIOL VALINATE

Humberto B. Arzeno, Cupertino, Calif., assignor to Syntex (U.S.A.) Inc., Palo Alto, Calif.

Filed Jan. 26, 1996, Ser. No. 592,080

Int. Cl.[6] C07D *473/18;* **C07B** *43/06*

U.S. Cl. 544—276 **10 Claims**

1. A process for preparing the compound 2-(2-amino-1,6-dihydro-6-oxo-purin-9-yl) methoxy-3-hydroxy-1-propanyl-L-valinate or a pharmaceutically acceptable salt or diastereomer thereof, comprising:

(a) hydrolyzing a compound of formula III

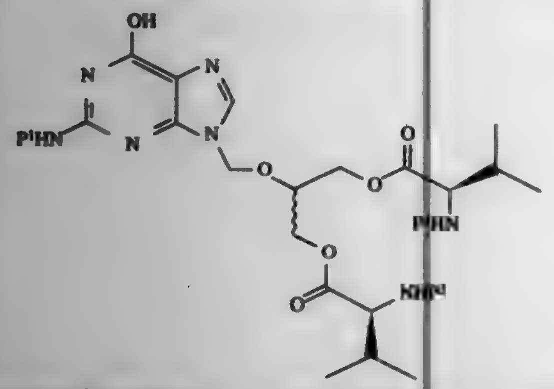

III

wherein P^1 is hydrogen or an amino-protecting group, and P^2 is an amino-protecting group, to a compound of formula IV

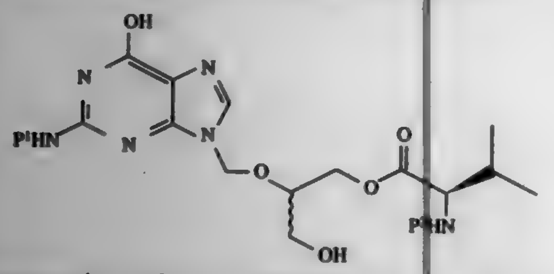

IV

wherein P^1 and P^2 are as defined above, in the presence of an amine selected from a lower alkyl amine, benzylamine or benzyl methylamine, in a nonpolar aprotic solvent; and

(b) deprotecting the compound of formula IV to 2-(2-amino-1,6-dihydro-6-oxo-purin- 9-yl)methoxy-3-hydroxy-1-propanyl-L-valinate or a pharmaceutically acceptable salt thereof; optionally followed by

(c) converting 2-(2-amino-1,6-dihydro-6-oxo-purin-9-yl)methoxy-3-hydroxy-1-propanyl-L-valinate into a pharmaceutically acceptable salt thereof; or

(d) separating the 2-(2-amino-1,6-dihydro-6-oxo-purin-9-yl)methoxy-3-hydroxy-propanyl-L-valinate into its (R) and (S) diastereomers.

5,700,937

METHOD FOR THE SYNTHESIS, COMPOSITIONS AND USE OF 2'-DEOXY-5-FLUORO-3'-THIACYTIDINE AND RELATED COMPOUNDS

Dennis C. Liotta, McDonough; Raymond F. Schinazi, Decatur, both of Ga., and Woo-Baeg Choi, North Brunswick, N.J., assignors to Emory University, Atlanta, Ga.

Continuation-in-part of Ser. No. 402,730, Mar. 15, 1995, which is a continuation of Ser. No. 92,248, Jul. 15, 1993, abandoned, which is a continuation of Ser. No. 736,089, Jul. 26, 1991, abandoned, which is a continuation-in-part of Ser. No. 659,760, Feb. 22, 1991, Pat. No. 5,210,085, which is a continuation-in-part of Ser. No. 473,318, Feb. 1, 1990, Pat. No. 5,204,466. This application Jun. 7, 1995, Ser. No. 481,556

Int. Cl.[6] A61K *31/505;9/127;* **C07D** *411/04*

U.S. Cl. 544—317 **2 Claims**

1. A liposomal suspension that includes β-2'-deoxy-5-fluoro-3'-thiacytidine.

5,700,938

INTERMEDIATES FOR IMIDAZOPYRIDINE DERIVATIVES

Yoshio Urawa; Ken Furukawa; Toshikazu Shimizu; Yoji Yamagishi, all of Ibaraki; Tomio Tsurugi, Chiba, and Tomio Ichino, Ibaraki, all of Japan, assignors to Eisai Co., Ltd., Tokyo, and Eisai Chemical Co., Ltd., Ibaraki, both of Japan

Division of Ser. No. 256,869, Aug. 5, 1994, Pat. No. 5,583,229. This application Jun. 6, 1995, Ser. No. 468,090

Claims priority, application Japan, Dec. 7, 1992, 4-351139; Dec. 7, 1992, 4-353865; Jun. 17, 1993, 5-169805; Jun. 17, 1993, 5-169823; Jun. 17, 1993, 5-169824; Jun. 17, 1993, 5-169825

Int. Cl.[6] C07D *213/75*

U.S. Cl. 546—14 **2 Claims**

1. A 2-acylamino- or 2-alkoxycarbonylamino-3-nitropyridine derivative (X) represented by the following formula:

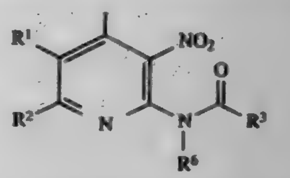

(X)

wherein R^1 represents a halogen atom; R^2 represents a hydrogen atom or a methyl group; R^3 represents a cycloalkyl group, a lower alkyl group or a lower alkoxy group, and R^6 represents a group represented by the following general formula:

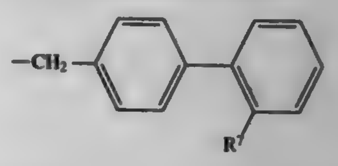

wherein R^7 represents a group represented by the following general formula:

—$COOR^8$

wherein R^8 represents a lower alkyl group, a cycloalkyl group; an alkoxyalkyl group, a thioalkoxyalkyl group, a cycloether group, an aryl group, an aralkyl group, an alkenyl group, an alkynyl group or a trialkylsilyl group, or R^7 represents a group represented by the following general formula:

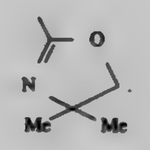

5,700,939

INTERMEDIATES USEFUL IN CAMPTOTHECIN SYNTHESIS

Joseph Fortunak, Exton, Pa., assignor to SmithKline Beecham Corporation, Philadelphia, Pa.

Continuation of Ser. No. 363,509, Dec. 23, 1994, abandoned, which is a division of Ser. No. 75,063, Jun. 10, 1993, Pat. No. 5,405,963. This application May 31, 1996, Ser. No. 658,915

Int. Cl.[6] C07D *491/052*

U.S. Cl. 546—116 **10 Claims**

1. A compound of Formula (II):

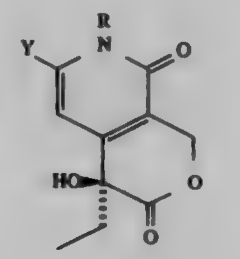

(II)

wherein

R is propargyl or substituted propargyl of Formula (B);

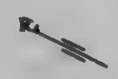

(B)

and

wherein

R_4 is hydrogen, $SiMe_3$ or alkyl;

Y is selected from a group consisting essentially of, bromo, iodo, a sulfonate, a cyano group, a carboxylic acid, and an N-aryl carboxylic amide derivative of Formula (A)

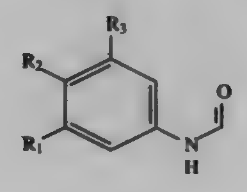

(A)

wherein

R_1 is hydrogen, or R_1 together with R_2 is —OCH_2O—;

R_2 is hydrogen, $O(C_1$–$C_6)$ or OH; and

R_3 is hydrogen, OH, $O(C_1$–$C_6)$alkyl, NO_2, NH_2, trifluoroacetamido, acetamido or methoxycarbonylamino.

5,700,940

N-ARYL[1,2,4]TRIAZOLO[1,5-A]PYRIDINE-2-SULFONAMIDE HERBICIDES

John C. Van Heertum; William A. Kleschick; Kim E. Arndt; Mark J. Costales; Robert J. Ehr; Kimberly Brubaker Bradley, all of Indianapolis, Ind.; Walter Reifschneider, Walnut Creek, Calif.; Zoltan Benkő, Indianapolis, Ind.; Mary Lynne Ash, and John J. Jachetta, both of Zionsville, Ind., assignors to DowElanco, Indianapolis, Ind.

Division of Ser. No. 466,510, Jun. 6, 1995, Pat. No. 5,571,775, which is a continuation-in-part of Ser. No. 273,519, Jul. 11, 1994, abandoned. This application Sep. 6, 1996, Ser. No. 714,838

Int. Cl.[6] C07D *471/04;* **A01N** *43/90*

U.S. Cl. 546—119 **15 Claims**

1. A halosulfonyl compound of the formula:

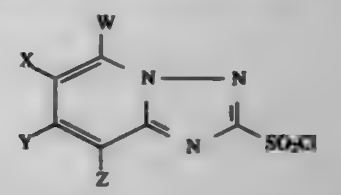

wherein W, X, Y, and Z each independently represents H, CH_3, CH_2CH_3, CH_2OCH_3, CF_3, F, Cl, Br, I, OCH_2CF_3, or $O(C_1$–$C_3)$alkyl optionally monosubstituted with F, Cl, or OCH_3 with the proviso that at least one of W, X, Y, and Z represents H.

5,700,941

OCTAHYDRONAPHTHYRIDINE DERIVATIVES

Janusz Jozef Kulagowski, Bishops Stortford, United Kingdom, assignor to Merck, Sharp & Dohme, Ltd., Hoddesdon, England

Filed Apr. 3, 1996, Ser. No. 627,312

Claims priority, application United Kingdom, Apr. 7, 1995, 9507224

Int. Cl.[6] C07D *471/08;* **A61K** *31/445*

U.S. Cl. 546—122 **9 Claims**

1. A compound of formula I, or a salt or prodrug thereof:

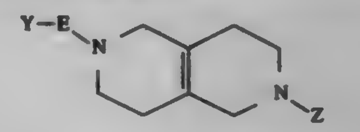

(I)

wherein

E represents a straight or branched alkylene chain containing from 1 to 4 carbon atoms; and

Y and Z independently represent an optionally substituted aryl or heteroaryl group.

5,700,942

PROCESS FOR PREPARING QUINOLINE BASES

Colin H. McAteer, Indianapolis; Robert D. Davis, Sr., Greencastle, and Joel R. Calvin, Westfield, all of Ind., assignors to Reilly Industries, Inc., Indianapolis, Ind.

Filed Jul. 11, 1996, Ser. No. 678,155

Int. Cl.[6] C07D *215/04*

U.S. Cl. 546—181 **20 Claims**

1. A process for preparing quinoline bases which comprises passing a vapor stream containing aldehydes and an aniline base in a respective molar ratio of at least 2:1 over a solid acid catalyst bed at a temperature above about 350° C. so as to form a quinoline base, said aldehydes including formaldehyde and a C_2–C_4 aldehyde.

5,700,943

PROCESS FOR MAKING PHENYLTHIOMETHYLPYRIDINYLALKENOATES

Robert A. Daines, Lansdale, Pa., assignor to SmithKline Beecham Corporation, Philadelphia, Pa.

PCT No. PCT/US93/06177, § 371 Date Dec. 20, 1994, § 102(e) Date Dec. 20, 1994, PCT Pub. No. WO94/00433, PCT Pub. Date Jan. 6, 1994

PCT Filed Jun. 30, 1993, Ser. No. 356,353

Int. Cl.^{6} C07D *213/30;213/32;213/55;213/65*

U.S. Cl. 546—296 **7 Claims**

1. A process for making a compound of formula I

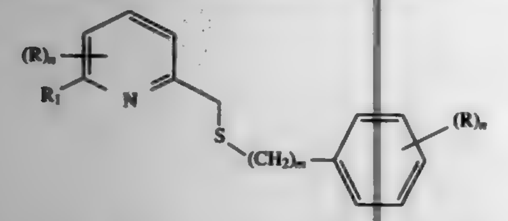

where the R_1 is $-(CH_2)_xCH{=}CHCOR_y$, or $-(CH_2)_xCH{=}CHCHO$, where x is 0–2 and R_y is —OH or an ester thereof or NH_2 or a substituted amide derivative thereof; and the designation $(R)_n$ is hydrogen or one or more non-hydrogen radicals covalently bonded to the pyridyl and phenyl rings and n is 1–2 when $(R)_n$ is not hydrogen, and m is 0–5; which process comprises coupling a chloromethylpyridine of formula II with a thiol of formula III in the presence of 2 to 5 equivalents of 1,8-diazabicyclo[5.4.0]undec-7-ene (DBU) under an inert gas at a temperature between about ambient and 100° C. for a period sufficient to effect the coupling;

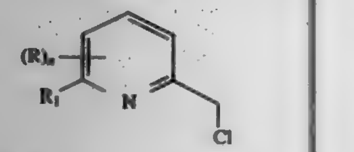

Formula II

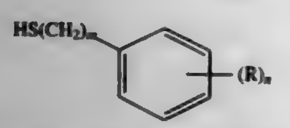

Formula III

where R_1 is defined above, m is 0–5 and $(R)_n$ is hydrogen or one or more radicals which can be substituted on either the pyridyl or phenyl ring and which does not have a functional group which interferes with the coupling reaction.

5,700,944

PROCESS FOR THE PRODUCTION OF PYRIDINECARBOXYLIC ACIDS

Toshihiro Hashimoto; Kenichi Nakamura, and Makoto Takagawa, all of Tsukuba, Japan, assignors to Mitsubishi Gas Chemical Company, Tokyo, Japan

Filed May 8, 1996, Ser. No. 646,631

Claims priority, application Japan, May 19, 1995, 7-121681; May 19, 1995, 7-121682; Jan. 26, 1996, 8-011797; Jan. 26, 1996, 8-011798

Int. Cl.^{6} C07D *213/807*

U.S. Cl. 546—327 **16 Claims**

1. A process for the production of a pyridinecarboxylic acid, comprising oxidizing an alkylpyridine with an oxygen-containing gas in a solvent in the presence of a catalyst formed of a heavy metal salt and a bromine compound, the solvent being a lower aliphatic monocarboxylic acid having a water content of 2 to 15% by weight.

5,700,945

PROCESS FOR PREPARING NIZATIDINE

Hartford W. Manning, Aurora, Canada, assignor to Torcan Chemical Ltd., Aurora, Canada

Division of Ser. No. 272,459, Jul. 11, 1994, Pat. No. 5,541,335. This application May 6, 1996, Ser. No. 595,117

Int. Cl.^{6} C07D *277/24;277/28*

U.S. Cl. 548—203 **2 Claims**

1. 4-Chloromethyl-2-hydroxymethylthiazole and acid addition salts thereof.

2. 4-[[2-aminoethyl)thio]methyl]2-hydroxymethylthiazole.

5,700,946

PROCESS FOR PRODUCTION OF N-VINYL COMPOUND

Yuuji Shimasaki, Otsu; Hideyuki Kanbe, Izumiotsu, and Akira Kurusu, Kyoto, all of Japan, assignors to Nippon Shokubai Co., Ltd., Osaka, Japan

Filed Apr. 17, 1996, Ser. No. 633,469

Claims priority, application Japan, Apr. 18, 1995, 7-092759

Int. Cl.^{6} C07D *263/04*

U.S. Cl. 548—231 **4 Claims**

1. A process for producing an N-vinyl compound of the following formula (2)

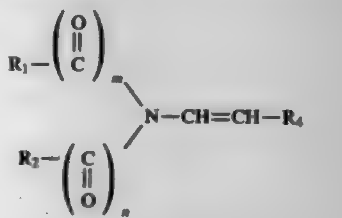

(2)

wherein

m and n are each independently 0 or 1,

R_1 and R_2 are each independently one member selected from the group consisting of hydrogen, hydrocarbon groups having 1–8 carbon atoms and alkoxy groups having 1–6 carbon atoms, with the provisos that (i) when m and n are each 0, none of R_1 and R_2 are hydrogen, and (ii) when none of R_1 and R_2 are hydrogen, R_1 and R_2 may bond to each other to form, together with N, a five- to seven-membered ring which may contain unsaturated bond(s) and/or hetero atom(s) selected from the group consisting of S, O and N other than said N already shown in formula (2), and

R_4 is one member selected from the group consisting of hydrogen and hydrocarbon groups having 1–6 carbon atoms, said process comprising:

subjecting an N-(1-alkoxyalkyl) compound of the following formula (1)

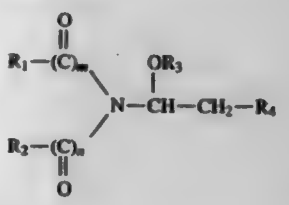

(1)

wherein

R_1, R_2, R_4, m and n are the same as in formula (2), and

R_3 is one member selected from the group consisting of methyl group, ethyl group, propyl group and butyl group, to alcohol elimination in a gas phase in the presence of a solid oxide catalyst of the following formula (13)

$$PaXbYcOd \qquad (13)$$

wherein

P is phosphorus,

X is at least one element selected from the group consisting of alkali metals and alkaline earth metals,

Y is at least one element selected from the group consisting of Ti, Zr, Nb, B, Al and Si,

O is oxygen,

a, b, c and d are the atomic ratios of P, X, Y and O, respectively, with a:b:c being 1:0.5–5:0–500, and d being determined by a, b, c and the bonding states of the individual elements to convert said N-(1-alkoxyalkyl) compound of the formula (1) into an N-vinyl compound of the formula (2).

5,700,947

NITRIC ESTERS HAVING ANTI-INFLAMMATORY AND/OR ANALGESIC ACTIVITY AND PROCESS FOR THEIR PREPARATION

Piero Del Soldato, Milan, Italy, assignor to NICOX S.A., Paris, France

PCT No. PCT/EP94/03182, § 371 Date Apr. 5, 1996, § 102(e) Date Apr. 5, 1996, PCT Pub. No. WO95/09831, PCT Pub. Date Apr. 13, 1995

PCT Filed Sep. 23, 1994, Ser. No. 624,508

Claims priority, application United Kingdom, Oct. 6, 1993, 9320599; Italy, May 10, 1994, MI94A0916

Int. Cl.^{6} C07D *209/04*

U.S. Cl. 548—491 **13 Claims**

1. Derivatives of propionic acid, 1-(p-chlorobenzoyl)-5-methoxy- 2-methyl-3-indolylacetic acid, 5-benzoyl-1,2-dihidro-3H-pyrrolo[1,2-a]pyrrole-1-charboxylic acid, 6-methoxy-2-napthylacetic acid, characterized in that they have the following general formula:

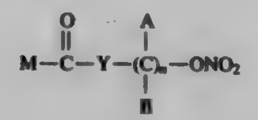

(IA)

where:

A and B are chosen from hydrogen, linear or brached, substituted or non substituted alkyl chains, M is chosen from:

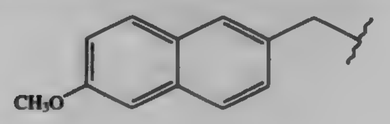

(XXXI)

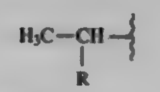

(XXXIII)

where R is chosen from:

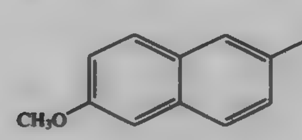

(II)

-continued

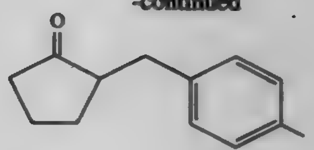

(X)

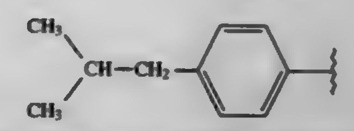

(III)

Y is chosen among oxygen, NH, NR_1, where R_1 is a linear or branched alkyl group, and n is an integer from 1 and 10.

5,700,948

PYRROLIDINE COMPOUNDS AND PROCESS OF PREPARING

Joachim Mittendorf; Peter Fey; Bodo Junge, all of Wuppertal; Johannes Kaulen, Boffzen; Kai van Laak, Köln, all of Germany; Heinrich Meier, Kobe, Japan, and Rudolf Schohe-Loop, Wuppertal, Germany, assignors to Bayer Aktiengesellschaft, Leverkusen, Germany

Filed Nov. 28, 1995, Ser. No. 563,725

Claims priority, application Germany, Dec. 5, 1994, 44 43 166.6

Int. Cl.^{6} C07D *207/40*

U.S. Cl. 548—531 **5 Claims**

1. A benzylididene compound of the formula

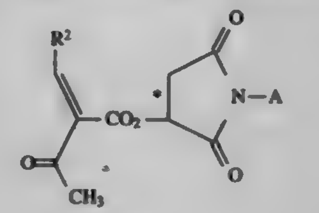

(II)

*R, S

in which

R^2 represents the radical

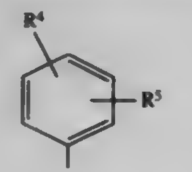

in which

R^4 and R^5 are identical or different and denote halogen, cyano, ethinyl, trifluoromethoxy, methylthio, nitro, trifluoromethyl or straight-chain or branched alkyl, alkenyl, alkinyl or alkoxy having up to 4 carbon atoms, and one of the substituents optionally represents hydrogen,

or a salt thereof.

5,700,949

OPTICAL RECEIVER CALIBRATION BASED ON A RELATIVE INTENSITY NOISE STANDARD

Douglas M. Baney, Los Altos, Calif., assignor to Hewlett-Packard Company, Palo Alto, Calif.

Filed Aug. 9, 1996, Ser. No. 694,962

Int. Cl.[6] G01N *21/00*

U.S. Cl. 73—1 R **18 Claims**

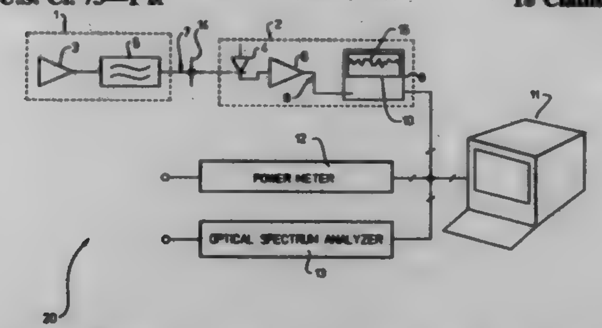

1. A calibration system for an optical receiver that converts optical signals to received signals according to a transfer function, the calibration system comprising:

an optical noise standard producing a reference optical noise signal for stimulating the optical receiver, the reference optical noise signal having a known intensity spectrum and a known average power; and

a controller coupled to the optical receiver, computing the transfer function using a received spectrum from the received signal resulting when the reference optical noise signal is applied and using the known intensity spectrum and the known average power.

5,700,950

PROVER ADAPTER FOR A FLUID METERING DEVICE

David E. Woollums, Frisco, and Gregory L. Foust, Richardson, both of Tex., assignors to Fisher Controls International, Inc., Clayton, Mo.

Filed Jun. 13, 1996, Ser. No. 661,298

Int. Cl.[6] G01F *25/00*

U.S. Cl. 73—3 **7 Claims**

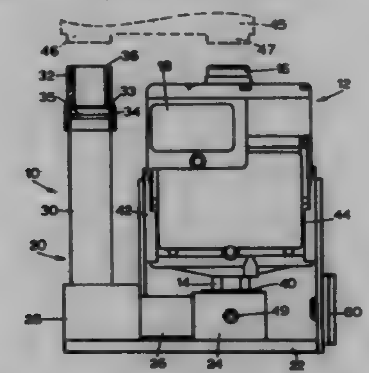

1. An apparatus for supporting a fluid metering device when the fluid metering device is being tested by a testing device, wherein each of the fluid metering device and the testing device has a fluid inlet and a fluid outlet separated by a predetermined distance, the apparatus comprising:

means for mounting the fluid metering device in an upright position to allow the fluid inlet and the fluid outlet of the testing device to be placed in pressurized contact with the fluid outlet and the fluid inlet of the fluid metering device, respectively, said mounting means including two guides that contact opposite sides of the fluid metering device at locations away from the fluid inlet and the fluid outlet of the fluid metering device; and

a base coupled to the mounting means which supports the mounting means and the fluid metering device when the fluid metering device is disposed in the mounting means.

5,700,951

TESTING APPARATUS OF STEERING SYSTEM

Tatsuya Sagiyama, Okazaki; Fumihiko Baba, Nagoya; Kaname Saito, Okazaki; Takashi Matsushima, Sayama, and Hitoshi Iizuka, Sayama, all of Japan, assignors to Toyota Jidosha Kabushiki Kaisha, Aichi-ken, and Kabushiki Kaisha Saginomiya Seisakusho, Tokyo, both of Japan

Filed May 29, 1996, Ser. No. 654,592

Claims priority, application Japan, Jun. 8, 1995, 7-141907

Int. Cl.[6] G01M *17/06*

U.S. Cl. 73—11.08 **17 Claims**

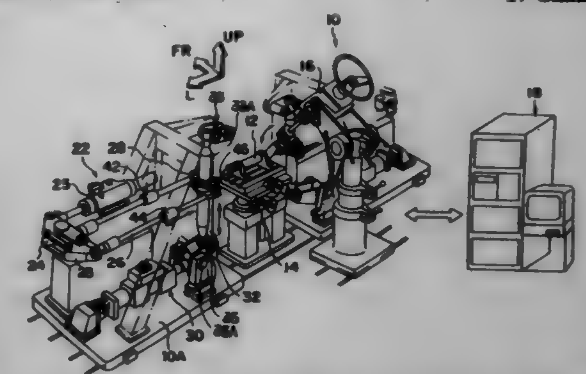

1. A testing apparatus of a steering system, having a first loading device for applying, to the steering system, load in a direction in which steering reaction force acts, and a second loading device for applying, to the steering system, load in a direction in which road-surface reaction force acts, said testing apparatus comprising:

first links formed from a pair of parallel link portions; and

second links which include a pair of parallel link portions disposed in a direction crossing said first links, each of the pair of parallel link portions of said second links being connected to said first links at two points such that one of said first links can be displaced with respect to the other in the direction in which road-surface reaction force acts and said first links can swing,

wherein the second loading device and a wheel-side connecting portion of the steering system are connected to the one of said first links;

the first loading device is connected to the other of said first links via a connecting mechanism which allows the other of said first links to swing about a center of rotation in a central portion of said other of said first links between two connecting points of said second links to said other of said first links, due to loading of the first loading device; and

a first load detector is mounted to one of said second links and a second load detector is mounted to the other of said second links.

5,700,952

TIME DOMAIN DELAY MEASUREMENT APPARATUS AND ASSOCIATED METHOD

Jorgen W. Andersen, Orlando, Fla., assignor to Sawtek Inc., Orlando, Fla.

Filed Nov. 28, 1995, Ser. No. 563,393

Int. Cl.[6] G01N *31/00;* **H01L** *41/08;* **A61B** *8/00*

U.S. Cl. 73—19.03 **57 Claims**

1. A sensing apparatus for generating an output signal related to a sensed quantity, said sensing apparatus comprising:

an ultrasonic delay sensor having a delay related to the sensed quantity; and

time domain analysis means operatively connected to said ultrasonic delay sensor for recirculating pulses therethrough and for generating the output signal related to the sensed quantity, said time domain analysis means comprising

pulse generator means for generating a series of input pulses to said ultrasonic delay sensor,

pulse detector means for detecting a series of output pulses after propagation through said ultrasonic delay sensor, and

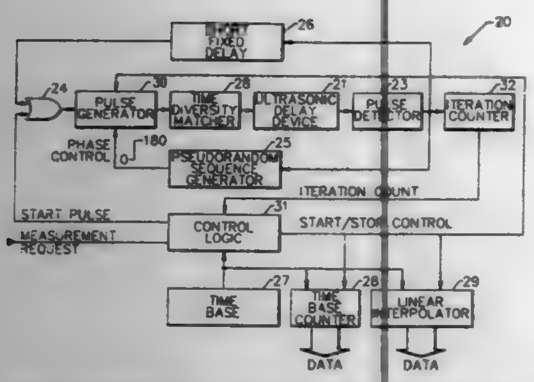

pulse recirculating means for causing said pulse generator means to generate the series of input pulses based upon respective previously detected output pulses from said pulse detector means.

5,700,953
METHOD FOR MAPPING MECHANICAL PROPERTY OF A MATERIAL USING A SCANNING FORCE MICROSCOPE
Vladimir Hlady; Andras Pungor, and Eric W. Stroup, all of Salt Lake City, Utah, assignors to University of Utah Research Foundation, Salt Lake City, Utah
Filed Apr. 3, 1996, Ser. No. 627,948
Int. Cl.^{6} G01B *5/28*
U.S. Cl. 73—105 **2 Claims**

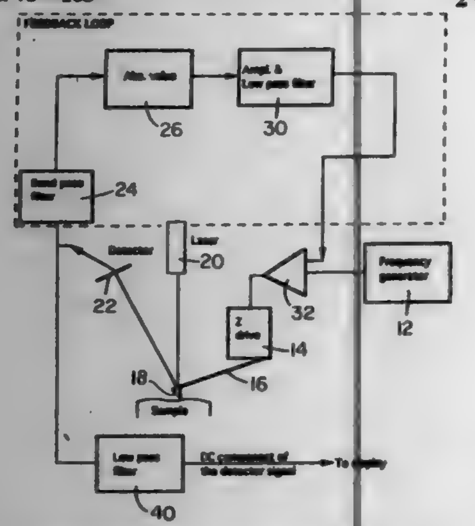

1. In a method for mapping a mechanical property of a surface of a sample with a scanning force microscope, wherein said method comprises the steps of (a) scanning a fine tip in contact with the surface of said sample within a predetermined scan area, said fine tip being supported on an end of a cantilever beam, (b) applying a loading force on the surface of said sample by said fine tip, (c) using a constant frequency sine wave to oscillate the cantilever beam relative to said surface of said sample, (d) measuring a detector response of the fine tip at the end of the cantilever beam, (e) determining an amplitude of the detector response and a change in phase angle of the detector response relative to the sine wave used to oscillate the cantilever beam, and (f) relating said amplitude and said change in phase angle to a property of said surface of said sample, the improvement comprising
determining an AC component of said detector response;
determining the absolute value of said AC component;
comparing said absolute value of said AC component with a preset value which is greater than zero and at least slightly less than the absolute amplitude of said sine wave that is used to oscillate the cantilever beam;
generating a feedback signal that corresponds to the comparison of said absolute value of the AC component with said preset value;
using the feedback signal to control the applied loading force imposed on the surface of said sample by said tip so that the amplitude of the detector response is maintained substantially constant as the tip scans the surface of said sample;
determining a DC component of said detector response; and
using the DC component to relate said applied loading force imposed on the surface of said sample to the mechanical property of the surface of said sample immediately below said tip.

5,700,954
METHOD OF CONTROLLING FUEL DURING ENGINE MISFIRE
Satyadeo Narain Sinha, Canton; Arthur Joseph Varady, Chelsea, both of Mich., and Richard John Gilbert, Braintree, England, assignors to Ford Global Technologies, Inc., Dearborn, Mich.
Filed Oct. 31, 1996, Ser. No. 740,577
Int. Cl.^{6} G01M *15/00*
U.S. Cl. 73—116 **3 Claims**

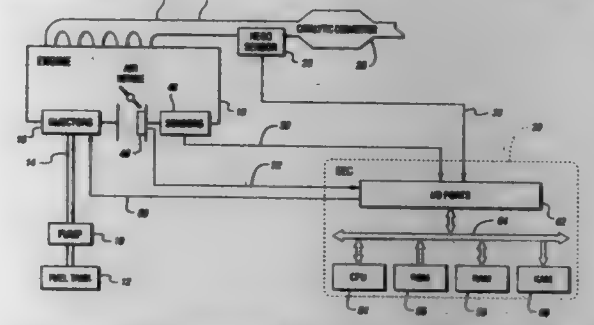

1. A method of controlling fuel to an engine during engine misfire to reduce the risk of damage to the catalyst inside a catalytic converter installed in the exhaust passage of the engine, said engine having a fuel injector included in a fuel control system including a computer for controlling the amount of fuel injected into a cylinder of said engine, comprising a sequence of the following steps:
detecting an engine misfire;
detecting mass air flow to the engine;
detecting the engine exhaust oxygen level relative to a reference level;
calculating a nominal fuel pulse width for a fuel injector based on detected mass air flow to achieve a stoichiometric air/fuel ratio;
adjusting said nominal pulse width to reflect the oxygen level in the exhaust from said engine;
adding a misfire correction value to said calculation to offset the increase in pulse width that will occur as a result of the increase in the exhaust gas oxygen level due to the unburnt air/fuel mixture caused by the misfire;
whereby said catalyst is prevented from exceeding a predetermined catalyst temperature threshold.

5,700,955
PRECISION THICKNESS VARIATION MAPPING VIA ONE-TRANSDUCER ULTRASONIC HIGH RESOLUTION PROFILOMETRY FOR SAMPLE WITH IRREGULAR OR ROUGH SURFACE
Don J. Roth, Lakewood, Ohio, assignor to United States of America as represented by the Administrator of the National Aeronautics and Space Administration, Washington, D.C.
Filed Apr. 22, 1996, Ser. No. 641,132
Int. Cl.^{6} G01H *5/00*
U.S. Cl. 73—597 **20 Claims**

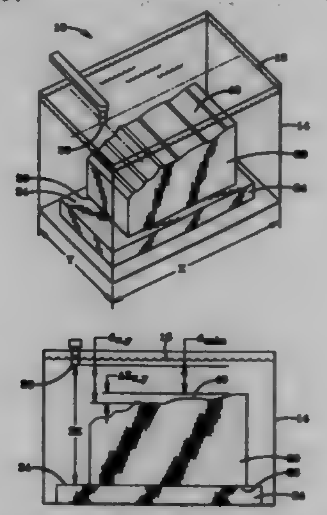

1. A method for determining the perpendicular distance between first and second opposite surfaces of a sample located on a support member, said support member having a flat reference surface which is flush with said second surface of said sample, said method comprising the steps of:
(a) transmitting a reference ultrasonic signal through an ultrasonic medium having a known velocity of propagation, V_{med}, to said flat upper surface of said support member which is a constant distance from a single transducer able to send and receive ultrasonic signals, said second surface of said sample flush with said flat upper surface of said support member whereby said second surface and said flat upper surface are the same constant distance from said transducer;
(b) receiving a reference ultrasonic echo from said flat upper surface of said support member;
(c) transmitting a first ultrasonic signal through said medium to a first location on said first surface;
(d) receiving a first ultrasonic echo with said transducer from said first location;
(e) recording time delay data between the transmission of said signals to the reception of said reference ultrasonic echo and said first ultrasonic echo;
(f) calculating said perpendicular distance from said time delay data and said ultrasonic velocity whereby said thickness is not determined by propagating said reference signal through said sample.

5,700,956
SIGNAL GENERATING PRESSURE GAUGE
Tien-Tsai Huang, No. 4, Lane 30, Wu-Chuan St., Pan-Chiao City, Taipei Hsien, Taiwan
Filed Nov. 12, 1996, Ser. No. 747,931
Int. Cl.^{6} G01L *9/10*; G08B *21/00*; H01H *35/36*
U.S. Cl. 73—735 **6 Claims**

1. A signal generating pressure gauge, comprising:
a pressure indicating unit including: a housing provided with an inlet to be connected to an article whose pressure value is to be measured; a pressure-value indicating panel disposed in said housing; a pressure converting unit disposed in said housing behind said indicating panel and fluidly communicated with said inlet, said pressure converting unit having a rotary shaft which extends through said indicating panel and

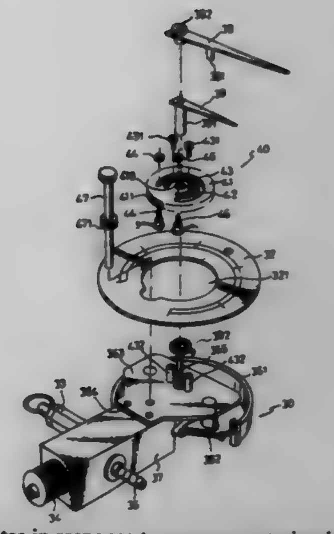

which rotates in response to pressure entering into said inlet; a pointer disposed in said housing in front of said indicating panel and having one end secured to said rotary shaft so as to be rotatable therewith in order to indicate on said indicating panel the pressure imposed on said inlet; and an electrically conductive pressure control needle disposed between said pointer and said indicating panel and having one end rotatably sleeved on said rotary shaft, said pressure control needle being movable together with said pointer;
an adjustable pressure-setting mechanism including: a rotary plate rotatably mounted in said housing and rotatable relative to said indicating panel, said rotary plate being formed with a setting hole unit; and electrically conductive low-pressure and high-pressure stop units extending into said setting hole unit, positions of said low-pressure and high-pressure stop units in said setting hole unit being adjustable and corresponding to lower and upper limits of a desired pressure range, said stop units limiting movement of said pressure control needle therebetween; and
a signal transmitting unit including: an input voltage cable electrically coupled to said pressure control needle for providing an electrical signal thereto; a low-pressure output signal cable electrically coupled to said low-pressure stop unit; and a high-pressure output signal cable electrically coupled to said high-pressure stop unit;
whereby, said pressure control needle electrically contacts said high-pressure stop unit to transmit the electrical signal to said high-pressure output signal cable when the pressure entering into said inlet reaches the upper limit of the desired pressure range, and electrically contacts said low-pressure stop unit to transmit the electrical signal to said low-pressure output signal cable when the pressure entering into said inlet reaches the lower limit of the desired pressure range.

5,700,957
METHOD AND APPARATUS FOR MEASURING MASS FLOW
József Alesz; Imre Batszynák; István Glódi; András Kiss; Józsefné Kukta, all of Budapest; Béla Nagy, Budakeszi; Péter Salamon; Elemér Szentpétery, both of Budapest; Zoltán Tóth, Budaörs, and Tamás Ujhelyi, Budapest, all of Hungary, assignors to MMG Automatika Muvek Reszvenytarsasag, Budapest, Hungary
PCT No. PCT/HU94/00033, § 371 Date Feb. 1, 1996, § 102(e) Date Feb. 1, 1996, PCT Pub. No. WO95/04259, PCT Pub. Date Feb. 9, 1995
PCT Filed Aug. 3, 1994, Ser. No. 592,309
Claims priority, application Hungary, Aug. 3, 1993, P 93 02236
Int. Cl.^{6} G01F *1/78*
U.S. Cl. 73—861.357 **3 Claims**

1. An apparatus for measuring mass flow of a fluid stream, comprising: an inlet conduit and an outlet conduit for said fluid

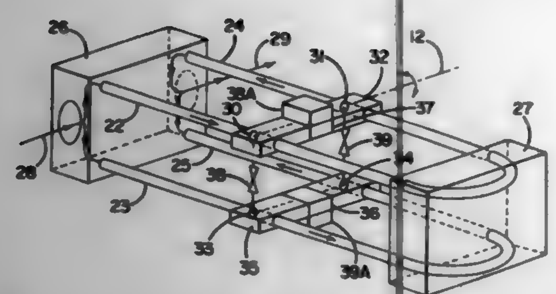

stream, at least one resilient flow pipe having fixed mounting ends communicating with said inlet and outlet conduits, means for forcing said flow pipe to perform vibration movement between said mounting ends transverse to the axis of said flow pipe, a mechanism for counterbalancing displacements caused by periodic Coriolis forces, said mechanism being fastened to a cross section of said flow pipe at which the function describing the vibration amplitude along the axis of said flow pipe has a local maximum, said mechanism comprising a sandwich structure having two interrelated parts and two piezoelectric crystals disposed between said interrelated parts for sensing mechanical stresses, each of said piezoelectric crystals having a positive armature and a negative armature, said positive armatures being divided into two parts along separating lines, said piezoelectric crystals being in contact with their divided positive armatures facing each other, said separating lines being aligned and parallel to the axis of moment caused by the Coriolis force, said divided armatures being isolated from a grounded body of the apparatus and forming a first terminal and a second terminal, while said negative armatures of said piezoelectric crystals are connected galvanically together by means of a mounting frame forming a grounded third terminal, and means for producing signals corresponding to the mass flow on the basis of signals of said piezoelectric crystals.

5,700,958
INERTIA FORCE FLOWMETER WITH TRANSVERSE PRESSURE GRADIENT SENSORS
Hyok S. Lew, and Yon S. Lew, both of 7890 Oak St., Arvada, Colo. 80005
Continuation-in-part of Ser. No. 299,362, Sep. 1, 1994, and a continuation-in-part of Ser. No. 523,811, Sep. 5, 1995. This application May 13, 1996, Ser. No. 644,958
Int. Cl.⁶ G01F *1/78*
U.S. Cl. 73—861.357 **20 Claims**

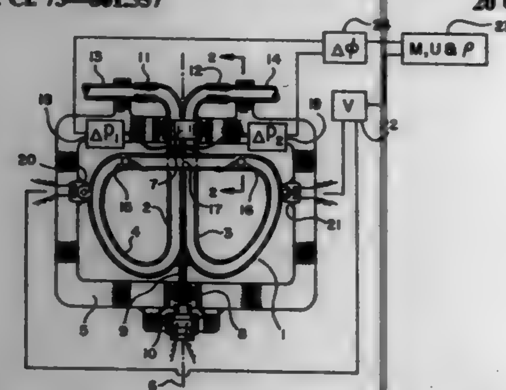

1. An apparatus for measuring flow rate of fluid moving through at least one curved conduit with two opposite extremities restrained from experiencing lateral movements, comprising in combination:

a) at least one curved conduit with two opposite extremities restrained from experiencing lateral movements;
b) means for generating a lateral reciprocating motion of said at least one conduit in directions substantially perpendicular to a reference plane defined by the center line of the conduit in a mode wherein amplitude of the lateral reciprocating motion of said at least one conduit has one of the following two distributions along the center line of the conduit; a symmetric distribution about a center section of the conduit and an antisymmetric distribution about the center section of the conduit;
c) a first pressure sensor for detecting an alternating transverse pressure gradient existing in the fluid in directions parallel to the directions of the lateral reciprocating motion of the conduit at a first section of the conduit belonging to a first half of the conduit, and converting the alternating transverse pressure gradient into a first alternating electrical signals;
d) a second pressure sensor for detecting an alternating transverse pressure gradient existing in the fluid in directions parallel to the directions of the lateral reciprocating motion of the conduit at a second section of the conduit belonging to a second half of the conduit opposite to said first half of the conduit, and converting the alternating transverse pressure gradient into a second alternating electrical signal; and
e) means for determining a difference between the first and second alternating electrical signals as a measure of mass flow rate of the fluid moving through said at least one conduit.

5,700,959
MANUAL PIPETTE WITH MAGNET ASSIST
William D. Homberg, Oakland, Calif., assignor to Rainin Instrument Co., Inc., Emeryville, Calif.
Continuation of Ser. No. 503,073, Jul. 14, 1995, abandoned. This application Jan. 11, 1996, Ser. No. 584,704
Int. Cl.⁶ B01L *3/02*
U.S. Cl. 73—864.16 **13 Claims**

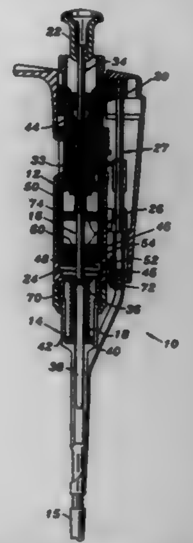

1. A manual pipette for repeatably aspirating and dispensing a predetermined quantity of liquid, comprising:

a hand holdable pipette body;
a plunger unit mounted within the pipette body for manual movement by a pipette user away from a first stop position through a home position to a second stop position, the home position being a predetermined starting position for the plunger unit for a repeatable aspiration of the predetermined quantity of liquid into a tip extending from the pipette body when the tip is immersed in the liquid and the second stop position being an end position for the plunger unit at which substantially all liquid is dispensed by the pipette from the tip;
a return spring within the pipette body for generating a first force opposing movement of the plunger unit in a direction away from the first stop position and for returning the plunger unit to the first stop position;
means within the pipette body for generating a second force opposing movement of the plunger unit in a direction away from the first stop position as the plunger unit moves beyond the home position toward the second stop position; and

a magnet assist mechanism operative as the plunger unit in moving away from the first stop position reaches the home position for generating a magnetic force opposing the first force of the return spring to aid the pipette user in locating and maintaining the plunger unit at the home position and under control of the pipette user.

5,700,960
APPARATUS FOR TESTING COMPONENTS TO BE INCORPORATED IN A VIDEO CASSETTE RECORDER
Yeo-Uk Joe, Seoul, Rep. of Korea, assignor to Daewoo Electronics, Co., Ltd., Seoul, Rep. of Korea
Filed Mar. 20, 1996, Ser. No. 618,740
Claims priority, application Rep. of Korea, Mar. 31, 1995, 95-6260
Int. Cl.⁶ G11B *15/66*
U.S. Cl. 73—865.9 **3 Claims**

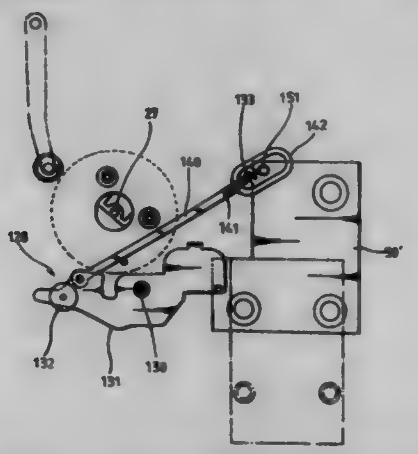

1. An apparatus for testing components to be incorporated in a video cassette recorder or digital video cassette recorder, which comprises:

a base provided with a pair of guide rails, wherein the guide rails are spaced from and parallel to each other on the base;
a stationary plate on which a pair of reel tables and a head drum including a rotary and a stationary drums are installed, the stationary plate being mounted between the guide rails on the base;
a pair of pole bases on each of which a pair of loading posts is installed;
a capstan motor holder on which a capstan shaft and a hinge pin are mounted, the capstan motor holder being mounted on the base;
a first driven plate and a pair of second driven plates moving along the guide rails, wherein the pole bases are mounted on both inside lateral surfaces of the second driven plates, and, in response to a movement of the second driven plates, move to both side positions adjacent to the head drum, respectively, and one of the second driven plates closer to the capstan shaft is provided with a boss;
driving means for reciprocating the first driven plate and the second driven plates; and
a pinch roller lever assembly provided with a pivot arm pivotably mounted to the hinge pin, a pinch roller rotatably mounted on the pivot arm, a lever and a coil spring, wherein one end of the lever is rotatably fixed near the pinch roller on the pivot arm and the other end thereof is provided with a holding means and a substantially ellipse-shaped ring, the boss of said one of the second driven plates being inserted into the substantially ellipse-shaped ring, both ends of the coil spring being secured to the holding means of the lever and the boss, respectively.

5,700,961
SYSTEM AND METHOD FOR MEASURING STICKINESS OF MATERIALS SUCH AS COTTON
William S. Anthony, Greenville, and Richard K. Byler, Stoneville, both of Miss., assignors to The United States of America as represented by the Secretary of Agriculture, Washington, D.C.
Filed Jun. 19, 1996, Ser. No. 666,769
Int. Cl.⁶ G01N *33/36*
U.S. Cl. 73—866 **16 Claims**

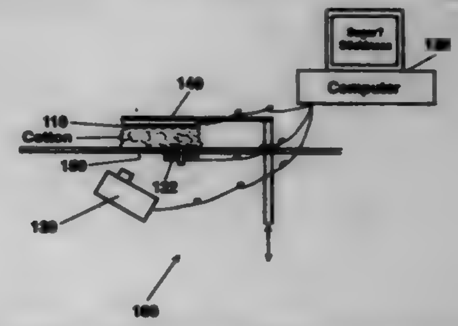

1. A system for determining the stickiness of agricultural solids, comprising:

first moisture measuring means for determining a reference moisture level in a sample of agricultural solids, wherein said first moisture measuring means is not responsive to the presence of sugars in the agricultural solids;
second moisture measuring means for determining a sugar-based moisture content in the sample, wherein said second moisture measuring means is responsive to the presence of sugars in the agricultural solids; and
processing means coupled to said first moisture measuring means and to said second moisture measuring means for comparing said reference moisture level to said sugar-based moisture content to thereby determine the stickiness of the sample.

5,700,962
METAL MATRIX COMPOSITIONS FOR NEUTRON SHIELDING APPLICATIONS
Robin A. Carden, Costa Mesa, Calif., assignor to Alyn Corporation, Irvine, Calif.
Filed Jul. 1, 1996, Ser. No. 674,209
Int. Cl.⁶ B22F *1/00*
U.S. Cl. 75—236 **14 Claims**

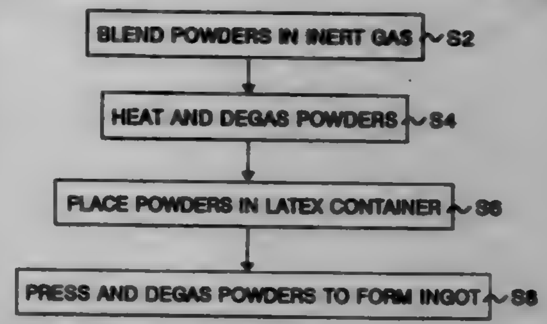

1. A neutron shield comprising:

a boron carbide-metal matrix composite having a composition of about 10 to 60 weight % boron carbide, about 40 to 90 weight % of a metal matrix material, and less than about 6 weight % of one or more metal additives used to improve the chelating properties of the metal matrix material by forming intermetallic bonds therewith, wherein the composite is castable, extrudable, and has a tensile strength greater than or equal to 50 kpsi and a yield strength greater than or equal to 45 kpsi, and wherein about 20% of boron in the boron carbide is a naturally occurring isotope B^{10} so as to efficiently absorb neutrons.

5,700,963
MUSIC BOX MOVEMENT WITH DETENT STOP
Alexandra Koelemeijer; Bernard Knuchel, both of Yverdon-les-Bains, Switzerland; Laurent Letoublon, Malbuisson, France, and Stéphane Olgiati, Renens, Switzerland, assignors to Reuge Music USA Ltd., Los Angeles, Calif.
Continuation of Ser. No. 367,210, Jan. 13, 1995, abandoned. This application Aug. 14, 1996, Ser. No. 699,682
Claims priority, application France, May 17, 1993, 93 06090
Int. Cl.⁶ G10F *1/06*
U.S. Cl. 84—95.1 **15 Claims**

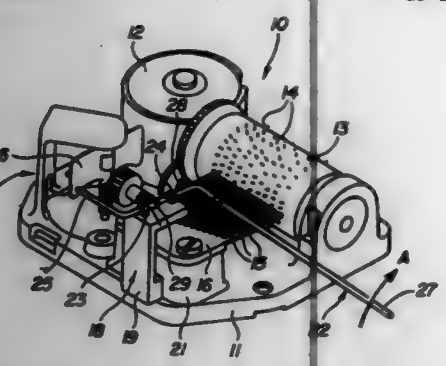

1. A movement for a music box comprising a base plate (11) supporting a roller (13) having a plurality of radial pins (14), a musical keyboard (16), means for fixedly attaching and precisely positioning said keyboard (16) to said base plate (11), a plurality of reeds (15) being mounted on said keyboard and being located adjacent said roller (13) for actuation by said plurality of radial pins (14), a drive mechanism (12) being drivingly connected to said roller, a movement train (17) being coupled to said roller for regulating rotational speed of said roller, and a detent stop for stopping movement of said roller;

wherein said detent stop comprises: i) support means for supporting said detent stop, and ii) rapid assembly means for one of force-fitting and resilient snap-mounting said support means to said base plate (11) after said keyboard (16) is fixedly attached and precisely positioned to said base plate (11).

5,700,964
DECORATIVE PLATE WITH DYNAMIC PHENOMENON
Jack Liu, No. 3, Alley 202, Kao-Fon Rd., Hsin-Chu City, Taiwan
Filed Jun. 7, 1996, Ser. No. 660,377
Int. Cl.⁶ G10F *1/06*
U.S. Cl. 84—95.2 **7 Claims**

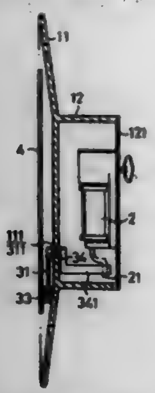

1. A decorative plate with dynamic phenomenon comprising:
a plate having a front surface, a back surface, and an opening therethrough,
a base attached to said back surface,
a rear plate attached to said base,
a music box mounted on said rear plate,
a rotatable eccentric shaft extending from said music box,
a driven block having a pair of spaced extending arms in engagement with said eccentric shaft, said driven block defining an assembly hole therethrough,
an assembly component mounted within said opening, said assembly component having a pair of axle holes,
a decorative card,
a vibrating block attached to said decorative card, said vibrating block having a pair of positioning holes,
a pair of positioning shafts each in pivotal communication with one of said pair of positioning holes,
a vibrating rod connected to one of said pair of positioning shafts, said vibrating rod having a rotary axle passing through one of said axle holes to said assembly hole,
an auxiliary rod connected to the other of said pair of positioning shafts, said auxiliary rod having a rotary axle at an end opposite said positioning shaft and passing through said other axle hole, and
a position ring secured to said rotary axle of said auxiliary rod; and
wherein the gap between said pair of axle holes is smaller than the distance between said positioning holes.

5,700,965
TUNING SYSTEMS FOR STRINGED INSTRUMENTS
Floyd D. Rose, 117 Via de la Valle, Del Mar, Calif. 92104
Filed Jun. 7, 1995, Ser. No. 484,120
Int. Cl.⁶ G10D *3/00*
U.S. Cl. 84—297 R **25 Claims**

1. A set of strings for a musical instrument having a nut and a bridge including a plurality of bridge critical contact surfaces each spaced at a desired distance from said nut, said set of strings comprising:

a plurality of strings having a first end and a second end and a predetermined length between said first and second ends, said predetermined length being no greater than the distance between said nut and a corresponding one of said bridge critical contact surfaces plus one inch whereby each said predetermined length corresponds to a tuned harmonic length upon placement of said plurality of strings in assembled position across said nut and said bridge critical contact surfaces on the associated musical instrument.

5,700,966
WIRELESS REMOTE CHANNEL-MIDI SWITCHING DEVICE
Frank LaMarra, 522 North Center, Royal Oak, Mich. 48067
Continuation-in-part of Ser. No. 364,553, Dec. 27, 1994, Pat. No. 5,576,507. This application Jul. 13, 1995, Ser. No. 502,287
Int. Cl.⁶ G10H *1/02*
U.S. Cl. 84—645 **20 Claims**

11. A wireless remote controlled musical instrument switching system for use with a musical instrument of the type that produces a musical signal representing musical notes and for use with a signal processor or amplifier that alters the quality of the musical signal, comprising:

a switch bank comprising a self-contained package that includes at least one manually actuable switch having means for placement in proximity to a musician;
a transmitter coupled to said switch bank for emitting a radiated signal in response to actuation of said switch;
said radiated signal comprising sound effecting information different than said music signal;
a receiver for receiving said radiated signal and for producing a control signal corresponding to the actuation of said switch;
a musical device switching interface coupled to said receiver for producing ON/OFF signals in accordance with said control signal said interface being adapted to control said signal processor or amplifier in accordance with said sound effecting information.

5,700,967
INTERLOCKING MECHANISM FOR A SELF-LOADING WEAPON
Manfred Gühring, Beffendorf, Germany, assignor to Heckler & Koch GmbH, Germany
Filed Dec. 6, 1996, Ser. No. 762,378
Claims priority, application Germany, Dec. 7, 1995, 195 45 774.9
Int. Cl.⁶ F41A *17/00;7/00*
U.S. Cl. 89—1.42 **10 Claims**

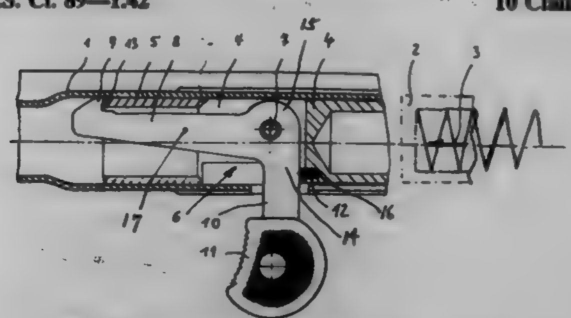

1. A self-loading weapon comprising:
a housing providing a longitudinally extending guide having a forward position and a rearward position;
a bolt including at least a portion seated in the guide for sliding movement;
a tension slide element seated in the guide adapted for sliding movement between the forward position and the rearward position;
a recoil spring coupled to the bolt for normally biasing the bolt and the tension slide element in the forward position; and
a hand lever mounted to the tension slide element about a pivot, the hand lever having a grip end protruding from the housing for manually moving the tension slide element in the housing and, a latch disposed thereon inside the housing, the hand lever being pivotable to a latched position when the tension slide element is in the forward position so that the latch retentively engages a detent formed in the housing, the hand lever being counter-rotatable to an unlatched position to disengage the latch from the detent to permit movement of the tension slide element in the rear direction.

5,700,968
PERFORATING GUN BRAKE
Ross Arthur Blimke, R.R. #1 Site 11 Box 16, Grande Prairie, Alberta, Canada, T8V 2Z8
Filed Sep. 30, 1996, Ser. No. 723,564
Int. Cl.⁶ F42B *3/00;* **E21B** *7/00*
U.S. Cl. 102—312 **6 Claims**

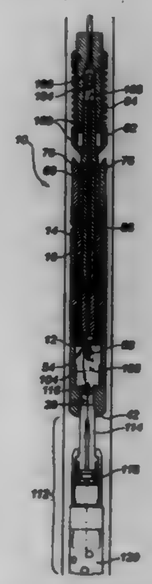

1. A perforating gun brake, comprising:
a tubular housing having an exterior surface, a first end, a second end, and an interior surface that defines an interior bore that extends from the first end to the second end, the first end of the tubular housing including coupling means for coupling with a perforating gun;
an annular piston having an exterior surface, a first end, a second end, and an interior bore that extends between the first end and the second end, the first end of the annular piston being telescopically received in the interior bore at the second end of the tubular housing;
a mandrel having an exterior surface, a first end, a second end, and a wire conduit that extends between the first end and the second end, the mandrel extending through the interior bore of the annular piston into the interior bore of the tubular housing, the mandrel serving as a guide for the telescopic movement of the annular piston;
an annular hydraulic fluid chamber formed in the interior bore of the tubular housing between the exterior surface of the mandrel and the interior surface of the tubular housing, the hydraulic fluid chamber having a first end and a second end;
first sealing means positioned at the first end of the hydraulic fluid chamber between the exterior surface at the first end of the mandrel, and the interior surface of the tubular housing;
second sealing means positioned at the second end of the hydraulic fluid chamber between the exterior surface of the annular piston and the interior surface of the tubular housing;
piston biasing means on the mandrel exerting a biasing force urging the annular piston toward the first end of the mandrel, such movement being resisted by hydraulic fluid in the hydraulic fluid chamber;
an electrically actuated flow means positioned on the first sealing means;
several gripping members pivotally mounted to the exterior surface of the annular piston spaced from the first end, the gripping members being movable between a retracted position

substantially parallel to the exterior surface and a deployed position extending outwardly at an angle from the exterior surface;

gripping members deploying means mounted to the exterior surface of the mandrel, the gripping members deploying means being pressure responsive, such that the gripping members deploying means exerts a biasing force to move the gripping members to the deployed position in response to pressure exerted upon detonation of the perforating gun;

a pair of wires extending through the wire conduit from the second end to the first end of the mandrel, the wireline being connected to the electrically actuated flow means;

a direct current positive/negative firing module connected to the wireline, such that one of a positive electric pulse and a negative electric pulse can be sent through one of the pair of wires to trigger the perforating gun and the other of the positive electric pulse and the negative electric pulse can be sent through the other of the pair of wires to trigger the electrically actuated flow means positioned on the first sealing means;

upon detonation of a perforating gun the pressure responsive biasing means moves the gripping members to the deployed position, the gripping members remain in the deployed position until an electric pulse triggers the electrically actuated flow means to allow hydraulic fluid to escape from the hydraulic chamber, as the hydraulic chamber is emptied of hydraulic fluid the annular piston moves telescopically into the tubular housing is urged by the piston biasing means toward the first end of the mandrel, the movement of the annular piston along the mandrel moves the gripping members away from the gripping members deploying means allowing the gripping members to return to the retracted position.

5,700,969

UNDERGROUND JET PERFORATING USING RESISTIVE BLASTING CAPS

Dennie L. Mosley, Pampa, Tex., assignor to Titan Specialties, Inc., Pampa, Tex.

Continuation-in-part of Ser. No. 438,403, May 10, 1995, Pat. No. 5,531,164. This application Apr. 30, 1996, Ser. No. 640,087

Int. Cl.[6] F42B *3/00;3/10*

U.S. Cl. 102—313 **20 Claims**

1. A select fire gun assembly for jet perforating of underground

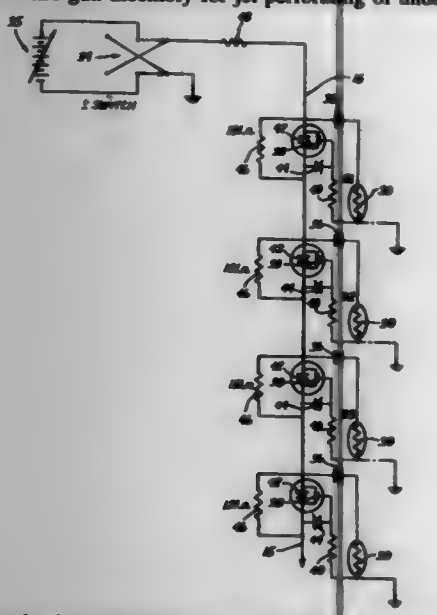

well casings, having a plurality of explosive charges and capable of sequentially detonating each one of the charges by applying d.c. voltage of alternating polarity from the surface, the gun assembly comprising:

a closed tubular carrier having a plurality of internal compartments, the compartments being separated from one another by baffles, and each of said compartments containing an explosive charge to be detonated and a blasting cap attached to each explosive charge, the blasting cap capable of being activated by passage of current therethrough, and having a first and second electrical terminus, each of the baffles containing a dart mounted into the baffle without being in electrical contact therewith and capable of sealing the baffle and electrically grounding the dart only after the explosive charge in the compartment immediately below has detonated, each blasting cap being electrically grounded at its first terminus;

a d.c. voltage source on the surface;

a switch controlling said voltage source;

a logging cable that comprises a conductor connected to the switch whereby negative or positive voltage may be applied to the conductor at the option of an operator, and

in operative connection with each blasting cap a diode and an electronic switch connected to the output of the diode, the diode and the electronic switch being interposed between the second terminus of the blasting cap and the conductor, the electronic switch having a gate that doses the electronic switch when the gate is grounded, the gate of the electronic switch of the last blasting cap on the bottom of the gun assembly being grounded and connected through a first resistor to the output of the diode, the gate of the electronic switch of each of the remaining blasting caps being connected to the dart and through the first resistor to the output of the diode, the electronic switch capable of passing current through when the voltage applied to the conductor is passed through the diode and when the gate of the electronic switch is grounded, said diodes and electronic switches being arranged with alternating polarity for the blasting caps, whereby sequentially applying d.c. voltage of alternating polarity to the logging cable activates the blasting caps and detonates the explosive charges in sequential order starting with the explosive charge on the bottom of the gun assembly.

5,700,970

BROKEN-EMULSION AND PROCESS FOR RECYCLING EMULSION EXPLOSIVES

Melvin Adam McNicol, Quebec, Canada, assignor to ICI Canada Inc., Canada

Filed Oct. 13, 1995, Ser. No. 543,086

Int. Cl.[6] F42B *3/00;* **C06B** *45/10*

U.S. Cl. 102—332 **23 Claims**

1. A broken-emulsion comprising polyglycol bottoms and an emulsion explosive characterized by a substantially single liquid phase.

5,700,971

RAPID-RELEASE SMOKE HAND GRENADE

Peter Rayer, Neuenburg; Norbert Wardecki, Heuweiler, and Karl Raupp, Neuenburg, all of Germany, assignors to Buck Werke GmbH & Co., Bad Uberkingen, Germany

Filed Dec. 17, 1996, Ser. No. 768,898

Claims priority, application Germany, Dec. 22, 1995, 195 48 436.3

Int. Cl.[6] F42B *27/00;12/48*

U.S. Cl. 102—334 **8 Claims**

1. A rapid-release smoke hand grenade, comprising

(I) a manually actuatable igniter head (A) comprising a head part (1) having a central bore (3) and including a striker (5) which carries a striker pin (9), is pivotally mounted on one side of the head part (1) and is actuatable by means of a tension spring (7), and also comprising a safety clip (11) which is pivotally mounted on the other, opposite side of the head part (1), is secured by a safety element (13) and when in the secured position holds the striker (5) spring-loaded by means of its spring (7);

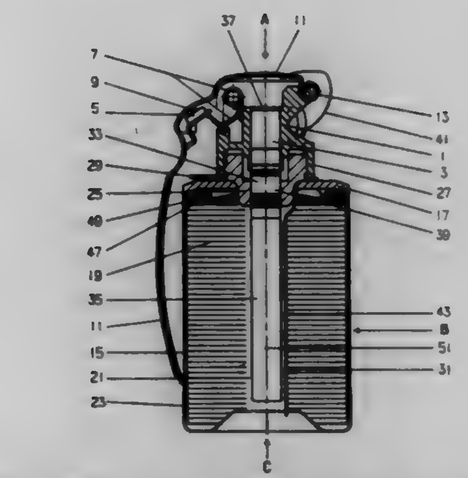

(II) an active mass member (B) comprising a drawn aluminium canister (15) having a base (17) of reinforced construction associated with the head part (1) of the igniter head, a smoke-forming means (19) in the form of thin, lightweight, disc- or disc sector-shaped combustible leaves coated with smoke-forming agent based on red phosphorus, arranged in the aluminium canister (15) so as to form a passage (21) passing centrally through the interior of the canister, and having a cap (23) tightly closing the aluminium canister (15) at its head portion; and

(III) an ignition/bursting unit (C) comprising an insert part (25) connecting the head part (1) of the igniter heat (A) to the base of the aluminium canister (15) of the active mass member (B) by means of respective screw threads (27, 29), and a drawn, thin-walled aluminium capsule (31), fixed in a central bore (33) of the insert part (25), which passes through the passage (21) not occupied by the smoke-forming means (19) practically as far as the bottom of the aluminium canister (15) and in which an ignition/bursting charge (35) for ignition of the smoke-forming means (19) and for bursting the aluminium canister (15) is located;

wherein the chain of pyrotechnical activity from the striker (5) to the ignition/bursting charge (35) is made up of an igniter cap (37) located in the central bores (3, 33) of the head part (1) and of the insert part (25) and a following ignition delay element (39), the safety clip (11) is secured to the head part (1) of the igniter head (A) by means of a first connecting element (41), and the cap (23) closing the aluminium canister (15) is secured to the reinforced base (17) of the aluminium canister by means of a second connecting element (43).

5,700,972

GAS CARTRIDGE

Michael Ernest Saxby, East Sussex, Great Britain, assignor to Constantia (International) Limited, Queenway, Gibraltar

PCT No. PCT/GB94/01779, § 371 Date Feb. 13, 1996, § 102(e) Date Feb. 13, 1996, PCT Pub. No. WO95/05573, PCT Pub. Date Feb. 23, 1995

PCT Filed Aug. 15, 1994, Ser. No. 596,303

Claims priority, application United Kingdom, Aug. 16, 1993, 9317040

Int. Cl.[6] F42B *5/02;* **F41B** *11/06*

U.S. Cl. 102—440 **5 Claims**

1. A pressurized gas cartridge comprising:

a body having a front wall;

a sleeve telescopically surrounding the body and having a forward wall positioned forwardly of the front wall of the body;

a first gas chamber within the body for containing gas under pressure;

an expansion chamber defined between the front wall of the body and the forward wall of the sleeve;

a passage between the gas chamber and the expansion chamber;

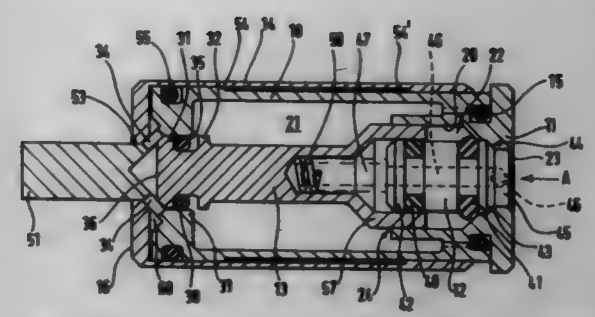

a first valve means in the front wall of the body and normally closing the passage and being moveable to open the passage in response to the impact on the cartridge of a firing pin to allow gas to flow through the passage from the gas chamber into the expansion chamber, thereby moving the body rearwardly relative to the forward wall of the sleeve;

a second normally closed valve means in the forward wall of the sleeve, said second normally closed valve means being operable to open in response to a predetermined relative movement between the body and the sleeve which takes place as gas enters the expansion chamber, thereby to vent gas through the second valve means from the expansion chamber, whereby the relative movement between the body and the sleeve increases the length of the cartridge, thus applying force to a breech block of a weapon in which the cartridge is used.

5,700,973

GAS INFLATOR HAVING ALUMINUM BEAD FILTER

Shahid A. Siddiqui, Canton, Mich., assignor to Automotive Systems Laboratory, Inc., Farmington Hills, Mich.

Filed Nov. 13, 1996, Ser. No. 747,342

Int. Cl.[6] C06D *5/00*

U.S. Cl. 102—530 **2 Claims**

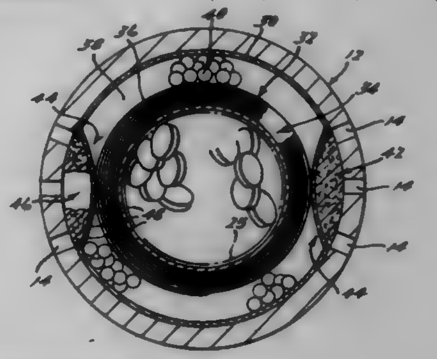

1. A gas generator comprising:

a housing having a plurality of gas discharge nozzles;

a propellant chamber located within said housing for holding a propellant charge, said chamber having a plurality of apertures therein;

means for igniting said propellant charge; and

a multistage filter in fluid communication with said plurality of apertures and said plurality of gas discharge nozzles, said multistage filter comprising:

a first filtration stage comprising an expanded metal mesh filter;

a second filtration stage comprising a plurality of aluminum beads for the filtration and heat retention of gas therein; and

a third filtration stage comprising a plurality of ceramic filters,

wherein gasses produced by ignition of said propellant charge flow through said plurality of apertures into said expanded metal mesh filter, thence through said plurality of aluminum beads, thence through said ceramic filters, thence outward through said discharge nozzles in said housing.

5,700,974

PREPARING CONSOLIDATED THERMITE COMPOSITIONS

Robert D. Taylor, Hyrum, Utah, assignor to Morton International, Inc., Chicago, Ill.

Division of Ser. No. 533,112, Sep. 25, 1995, Pat. No. 5,650,590. This application Feb. 25, 1997, Ser. No. 806,083

Int. Cl.[6] C06B *21/00*

U.S. Cl. 149—109.6 **10 Claims**

1. A process for producing a hard consolidated form of heat generating thermite composition suitable for use in an inflator for an airbag restraint system of a motor vehicle, said process comprising:
1) mixing in a slurry medium until in intimate admixture:
a) about 20 to about 30 weight percent of a powdered metal fuel,
b) about 40 to about 70 weight percent of a powdered metal oxide oxidizer,
c) about 5 to about 25% weight percent of an essentially non gas-producing, non hot particulate-producing binder, and
d) about 2 to about 10 weight percent of a supplemental oxidizing agent,
2) extruding the resulting slurry mixture into a consolidated form,
3) cutting the consolidated extruded slurry mixture into appropriately sized and shaped pellets, grains or wafer forms,
4) drying the pellet, grain or wafer forms to remove the slurry medium therefrom, to form the consolidated extruded slurry mixture forms into hard consolidated shapes.

5,700,975

SEMICONDUCTOR DEVICE

Akira Takata; Tetsuo Hikawa; Takashi Sawada, all of Suita, Japan; Tom Dang-hsing Yiu, 793 Los Positos Dr., Milpitas, Calif. 95035, and Fui-Long Ni, San Jose, Calif., assignors to Mega Chips Corporation, Suita, Japan, and Tom Dang-hsing Yiu, Milpitas, Calif.

Filed Mar. 28, 1995, Ser. No. 411,982

Claims priority, application Japan, Apr. 28, 1994, 6-091991(P)

Int. Cl.[6] H01L *23/02*

U.S. Cl. 174—52.4 **1 Claim**

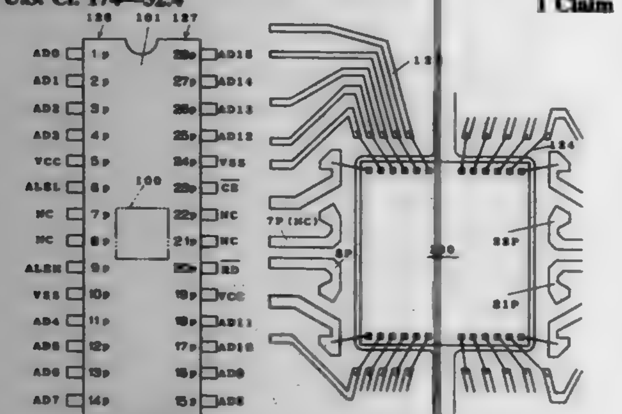

1. A semiconductor device comprising:
a chip and a package for storing the same; and
a plurality of external connection pins being provided on two opposite edges of said package,
said external connection pins including:
power supply pins being formed on said two opposite edges of said package respectively for supplying power to said chip,
ground pins being formed on said two opposite edges of said package respectively for connecting said chip to the ground,
input/output address/data pins being formed on said two opposite edges of said package outside said power supply pins and ground pins, and
excess pins being not connected to the exterior,
said excess pins being arranged between said power supply pins and said ground pins on said two opposite edges of said package respectively.

5,700,976

ELECTRONIC DEVICE HOUSING

Karl-Heinz Hahn, Eggenstein-Leopoldshafen, and Chartchai Saisila, Ruelzheim, both of Germany, assignors to Siemens Aktiengesellschaft, Munich, Germany

PCT No. PCT/DE94/00915, § 371 Date Feb. 9, 1996, § 102(e) Date Feb. 9, 1996, PCT Pub. No. WO95/05062, PCT Pub. Date Feb. 16, 1995

PCT Filed Aug. 8, 1994, Ser. No. 591,618

Claims priority, application Germany, Aug. 11, 1993, 94 12 000 U

Int. Cl.[6] H01R *13/502*

U.S. Cl. 174—58 **7 Claims**

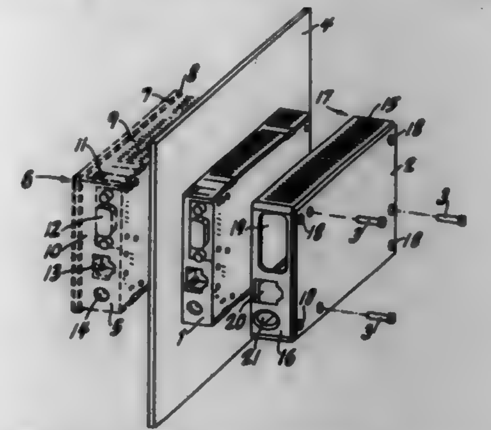

1. An electronic device housing, comprising:
a front housing part including a front surface, side members and a rim, the rim adjoining the front surface of the front housing part and laterally extending out from the side members of the front housing part; and
a cup-type rear housing member including side members, the rear housing member being adapted to mate with the front housing part so that upon assembly, the side members of the rear housing member surround the side members of the front housing part, the rear housing member further including at least one attachment element for securing the rear housing member to the front housing part so that:
the electronic device housing can be assembled as a hand-held unit, wherein front edges of the side members of the rear housing member abut a rear surface of the rim of the front housing part upon assembly of the front housing part and the rear housing member, and
the electronic device housing can be installed in a suitable opening of a plate, wherein the plate is captured between the front edges of the side members of the rear housing member and the rear surface of the rim of the front housing part upon assembly of the front housing part and the rear housing member.

5,700,977

ELECTRICAL CONDUIT FIXTURE

Michael Ford, 82 Bloomfield Est., Granite Falls, N.C. 28630, and Michael G. Edwards, 1980 Freedom La., Hudson, N.C. 28638

Filed Jul. 9, 1996, Ser. No. 677,124

Int. Cl.[6] H02B *1/30*

U.S. Cl. 174—64 **13 Claims**

1. An electrical conduit fixture for directing wire within a conduit through a directional change, said conduit fixture comprising:

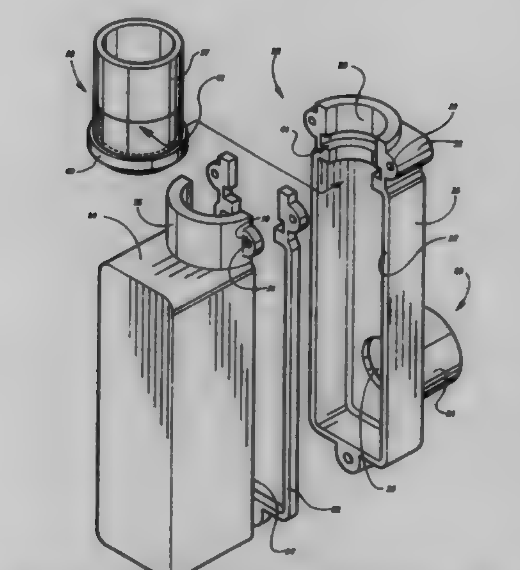

a body portion formed as first and second matable body sections having walls defining an inlet aperture, said inlet aperture being defined by a cylindrical member projecting outwardly from said body portion, said cylindrical member being formed in two sections, with a first cylindrical section being formed integrally with said first body section, and a second cylindrical section being formed integrally with said second body section, said first and second cylindrical sections being formed with end walls configured for mating engagement with one another, and walls defining an outlet aperture formed therein, said outlet aperture being oriented with said inlet aperture in a predetermined angular relationship of less than 180° with said outlet aperture forming walls being formed in said second body section,
means for removably fastening said body sections in a mated relationship; and
a collar fitted to said body portion at said inlet aperture radially inwardly from said first cylindrical section and said second cylindrical section.

5,700,978

SNAP-TOGETHER WALL PLATES FOR GANGED ELECTRICAL DEVICE INSTALLATIONS

Bob E. Huff, Gastonia, N.C., assignor to Pass & Seymour, Inc., Syracuse, N.Y.

Filed Jan. 25, 1996, Ser. No. 591,206

Int. Cl.[6] H05K *5/03*

U.S. Cl. 174—66 **18 Claims**

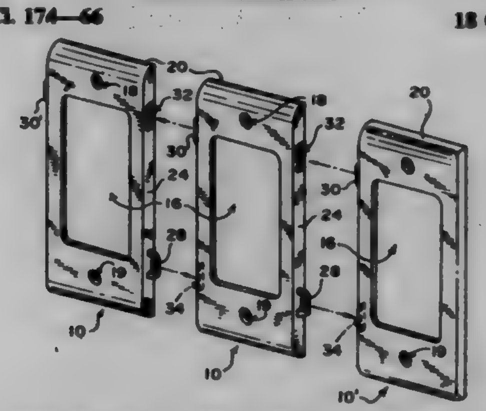

1. A wall plate for use with one or more identical, laterally adjacent wall plates in a ganged installation of electrical wiring devices, each of said wall plates comprising:
a) a body portion having front and rear surfaces bounded by a common periphery having linear, parallel, side edges;
b) a flange extending rearwardly from each of said side edges to define first and second side walls each having inner and outer surfaces, a uniform, predetermined thickness and free edges in a common plane;
c) a first tab extending outwardly from said first side wall and having means defining a shoulder parallel to and spaced outwardly from said first side wall by a distance substantially equal to said predetermined thickness;
d) a first, through opening in said first side wall defined by a periphery configured for insertion therethrough of a tab configured identically to said first tab and positioned on one of said adjacent wall plates, said first tab and first opening being spaced from one another along said first side edge by a predetermined distance;
e) a second tab and a second opening, respectively identical to said first tab and first opening and spaced from one another along said second side edge by said predetermined distance; and
f) said first tab being positioned laterally opposite said second opening and said second tab being positioned laterally opposite said first opening, said first and second tabs having limited flexibility for movement of the tabs thereof including their respective shoulders away from a normal position by application of a force and return to said normal position upon removal of said force, said tabs and openings being relatively configured and arranged such that, upon relative, linear movement of said first and second side walls of two of said wall plates into engagement with one another, the first tab of one plate is received in the second opening of the other plate, and the second tab of the other plate is received in the first opening of said one plate, said tabs being flexed by contact of said shoulders of said tabs with the peripheries which define said openings during such movement to provide a positive, snap-fit engagement of said laterally adjacent plates.

5,700,979

FLEXIBLE STRIP CABLE WITH EXTENSION FOR TESTING

David E. Lewis, Black Forest, and Kent T. Murphy, Colorado Springs, both of Colo., assignors to Discovision Associates, Irvine, Calif.

Filed Apr. 7, 1995, Ser. No. 418,738

Int. Cl.[6] H01B *7/08*

U.S. Cl. 174—117 F **19 Claims**

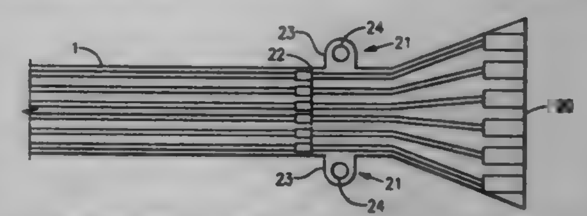

1. A flexible strip assembly with an extension for testing, said assembly comprising:
an elongated flexible strip cable having a first end;
a series of strip traces for carrying electrical current, said strip traces disposed lengthwise on said flexible strip cable, each of said strip traces having electrical strip contacts near said first end of said flexible strip cable, a minimum distance between two successive strip contacts defining a strip trace pitch;
an extension cable having a first end and a second end, said extension cable being integral with said flexible strip cable, said first end of said extension cable being connected to said first end of said flexible strip cable, and said second end of said extension cable having a width greater than the width of said first end of said flexible strip cable;
a series of test traces for carrying electrical current, said test traces extending from said first end of said extension cable to said second end of said extension cable, each of said test traces being electrically connected to one of said strip traces, each of said test traces having electrical test contacts near said

second end of said extension cable, a minimum distance between two successive test contacts defining a test trace pitch, said test trace pitch being greater than said strip trace pitch; and

a tooling guide in a fixed relationship with said first end of said flexible strip cable, said tooling guide for aligning a cutting tool with said first end of said flexible strip cable.

5,700,980
AERIAL CABLE SPACER
Salvatore H. Bello, W. Boylston, Mass., and John W. Howanski, Windham, N.H., assignors to Conductron Corporation, Milford, N.H.
Filed May 18, 1995, Ser. No. 443,712
Int. Cl.⁶ H02G *7/12*
U.S. Cl. 174—146 **16 Claims**

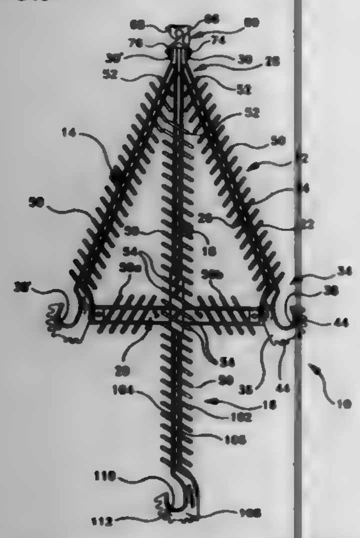

1. A spacer for at least two aerial high voltage cables comprising:

a. a first elongate arm member having a first open cable receiving hook at a first end, said first open hook for engaging a substantial portion of the periphery of a first high voltage cable to be placed in said first open hook and a first apertured tab at a second end;

b. a plurality of first fins on said first arm member between said first end and said second end;

c. a second elongate arm member having a second open cable receiving hook at a third end, said second open hook for engaging a substantial portion of the periphery of a second high voltage cable to be placed in said second open hook and a second apertured tab at a fourth end;

d. a plurality of second fins on said second arm member between said third end and said fourth end;

e. a cross brace member coupled at a first end to said first open cable receiving hook and at a second end to said second open cable receiving hook;

f. a plurality of third fins on said cross brace member between said first end and said second ends of said cross brace member; and

g. hook means coupled to said first apertured tab and said second apertured tab to permit said spacer to be hung from an overhead messenger cable.

5,700,981
ENCAPSULATED ELECTRONIC COMPONENT AND METHOD FOR ENCAPSULATING AN ELECTRONIC COMPONENT
Mark E. Tuttle; Joseph P. Mousseau, and Clay L. Cirino, all of Boise, Id., assignors to Micron Communications, Inc., Boise, Id.
Filed Feb. 8, 1996, Ser. No. 598,461
Int. Cl.⁶ H05K *1/00*
U.S. Cl. 174—250 **32 Claims**

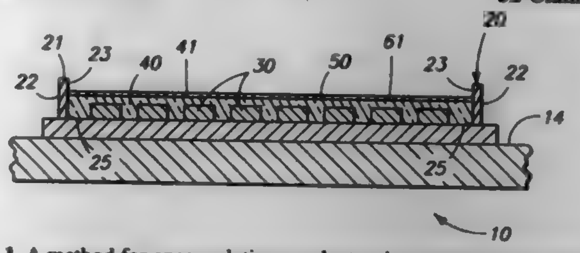

1. A method for encapsulating an electronic component comprising:

providing a substrate;

providing an enclosure dam around at least a portion of an electronic component placed on the substrate;

providing a first substantially uncured, flowable encapsulation material outwardly of the electronic component and within the enclosure dam;

providing a second encapsulation material atop the first encapsulation material and, within the enclosure dam; and

curing the first encapsulation material into a substantially nonflowable state, the second encapsulation material and the enclosure dam retaining the first flowable encapsulation material relative to the electronic component and substrate during the curing, the cured first material and the second material collectively forming a resultant encapsulation body on the electronic component;

wherein the first encapsulation material has a first curing rate, and the second encapsulation material has a second curing rate, the second curing rate being faster than the first curing rate.

5,700,982
SYMMETRICAL LOAD CELLS FOR USE IN CONJUNCTION WITH ROTARY MACHINES
Eli Neuman, Magdiel, Israel, assignor to Tedea-Huntleigh International, Ltd., Herzliya, Israel
Filed Jan. 23, 1995, Ser. No. 377,050
Int. Cl.⁶ G01G *23/26*
U.S. Cl. 177—229 **38 Claims**

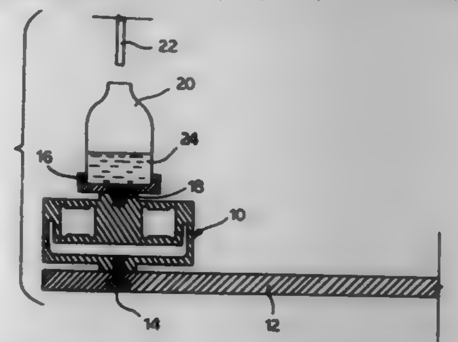

1. A weighing device for determining the weight of an object while both the weighing device and the object are placed on a rotating table, the weighing device comprising:

a load cell having at least two deflectable beams arranged symmetrically around the center of the load cell, at least some of which deflectable beams support means for measuring the deflection of the at least two beams and generating a proportional output signal, where the object being weighed is placed at a loading area which is integrally connected between the at least two deflectable beams and is also symmetrical about the loading area, such that when the load cell is placed on said rotating table, a symmetry line of the load cell is perpendicular to a radial line emanating from the center of said rotating table, the at least two deflectable beams deflected under the weight which are closer to the center of said rotating table will produce output signals with negative errors, and the at least two deflectable beams deflected under the load which are further away from the center of said rotating table will produce output signals with essentially equal but positive errors, thus resulting in a summed output in which the negative errors cancel the positive errors to produce accurate weighing.

5,700,983
SOUND ATTENUATING STRUCTURAL BLOCK
Kelly L. VonDross, Waukesha, Wis., assignor to Best Block Company, Butler, Wis.
Filed Aug. 26, 1996, Ser. No. 703,064
Int. Cl.⁶ E04B *1/00; 1/82*
U.S. Cl. 181—285 **28 Claims**

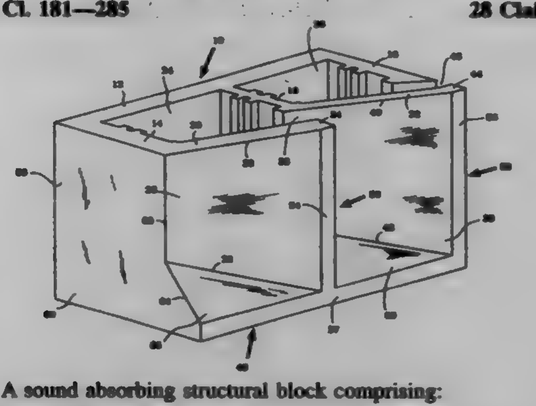

1. A sound absorbing structural block comprising:

a back wall;

a first and a second side wall contiguous with and extending outwardly from the back wall; and

an angled front wall extending between the first and second side walls at an acute angle relative to a plane defined by a portion of the back wall,

the back wall, the first and second side walls, and the angled front wall defining an internal cavity, and

the second side wall having an acoustical opening formed therein to provide acoustical communication between the internal cavity and the exterior of the structural block.

5,700,984
METHOD OF FABRICATING KEY SWITCHES AND THE PRODUCT THEREOF
Chi-Lung Tsai, Taipei Hsien, Taiwan, assignor to Silitek Corporation, Taipei, Taiwan
Filed May 22, 1996, Ser. No. 651,497
Int. Cl.⁶ H01H *9/00*
U.S. Cl. 200—5 A **6 Claims**

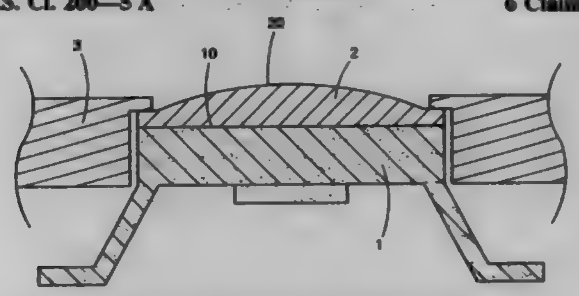

1. A key switch fabrication method including the steps of:

i) molding a rubber pad from silicone resin, and making a rubber key switch body from the rubber pad by stamping;

ii) printing the desired letter or pattern on the top side (10) of the rubber key switch body (1) thus obtained, then drying the printed key switch body 1 by baking;

iii) adhering a liquid silicone rubber on the key switch body over the printing thereof by spot glueing to form a transparent key cap;

vi) heating the key switch thus obtained from step iii) in a baking oven at 60° C. for 5 minutes and then heating it at 120° C. for 10 minutes to harden the key cap; and

v) examining the quality of the finished key pad.

5,700,985
INTERLOCK LATCH FOR ELECTRICAL OPERATOR
Kenneth M. Fischer, Finleyville, and Craig J. Puhalla, Coraopolis, both of Pa., assignors to Eaton Corporation, Cleveland, Ohio
Filed Feb. 29, 1996, Ser. No. 608,803
Int. Cl.⁶ H01H *9/20*
U.S. Cl. 200—50.01 **19 Claims**

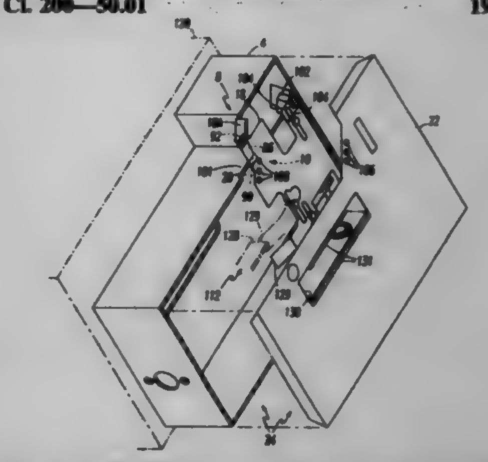

11. An electrical operator for an electrical switching device including switching means for switching said electrical switching device, said switching means having an on position and an off position, said electrical operator comprising:

a housing having an opening;

means for operating said switching means including a first position corresponding to the on position of said switching means and a second position corresponding to the off position of said switching means;

means for controlling said means for operating said switching means in a first mode of operation of said electrical operator;

means for controlling said switching means of said electrical switching device in a second mode of operation of said electrical operator;

selecting means protruding through the opening of said housing for selecting the first and second modes of operation, said selecting means including at least a first position enabling the first mode of operation and a second position enabling the second mode of operation; and

latch means cooperating with said selecting means, said latch means including means for engaging said housing at about the opening thereof in the second position of said selecting means and means for disengaging said means for engaging said housing from said housing to enter the first position of said selecting means.

18. The electrical operator as recited in claim 11 wherein the first mode of operation is an electrical mode; wherein the second mode of operation is a manual mode; and wherein said means for engaging said housing engages said housing to prevent entry into the electrical mode from the manual mode.

19. The electrical operator as recited in claim 18 wherein said switching means is a circuit breaker handle; wherein said means for controlling said switching means includes means for engaging the circuit breaker handle; and wherein said means for operating said switching means includes means for engaging said means for engaging the circuit breaker handle.

5,700,986
SWITCHING LEVERS HAVING SELECTIVELY VISIBLE MARKING AREAS
Claus Rürup, Porta Westfalica, and Lothar Roland Hennemann, Enger, both of Germany, assigners to WAGO Verwaltungsgesellschaft mbH, Minden, Germany
Filed Nov. 30, 1995, Ser. No. 565,001
Claims priority, application Germany, Dec. 1, 1994, 44 44 5563
Int. Cl.[6] H01H *9/00*
U.S. Cl. 200—50.32 **5 Claims**

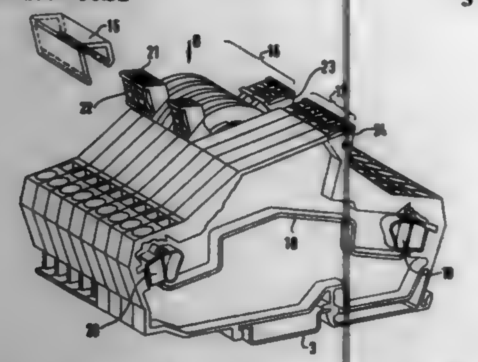

1. In a rail mounted terminal block having a lever switch element for disconnecting the through connection of a circuit, the lever being rotatable about a lever axis and having a handle made of insulating material which is movable from a first switching position on one side of a plane of the terminal block to a second switching position on the other side of the plane of the terminal block, the plane being defined by the lever axis and being generally parallel with respect to a view direction of an operator looking onto the terminal block, wherein the improvement comprises the handle having two marking areas defining visible surfaces, each marking area being adapted to receive a marking, one of said marking areas being visible when the lever is in its first switching position and the other marking area being visible when the lever is in its second switching position.

3. In the terminal block set forth in claim 1 further comprising a plurality of switching levers, the marking area of each handle defining a gripping component which is arranged in a superficially flush manner with respect to the external contour of an adjacent lever of the terminal block, and each terminal having a recess groove that runs linearly and parallel to a supporting bar that supports the terminal block for inserting terminal designation badges.

5. In the terminal block set forth in claim 3, the handles of directly adjacent switching levers being connected by a transparent cap that bridges at least two handles.

5,700,987
ALIGNMENT AND BONDING TECHNIQUES
Nagesh Ramamoorthy Basavanhally, Trenton, N.J., assignor to Lucent Technologies Inc., Murray Hill, N.J.
Division of Ser. No. 260,860, Jun. 16, 1994, Pat. No. 5,568,892. This application Mar. 15, 1996, Ser. No. 615,562
Int. Cl.[6] B23K *1/00;3/05*
U.S. Cl. 219—56.1 **22 Claims**

1. In combination:
a first device;
a substrate;
a plurality of solder elements between the first device and the substrate;
a resistive heater element associated with each of the plurality of solder elements;
and means for reflowing the plurality of solder elements wherein the resistive heater elements associated with predetermined numbers of the plurality of solder elements are sequentially

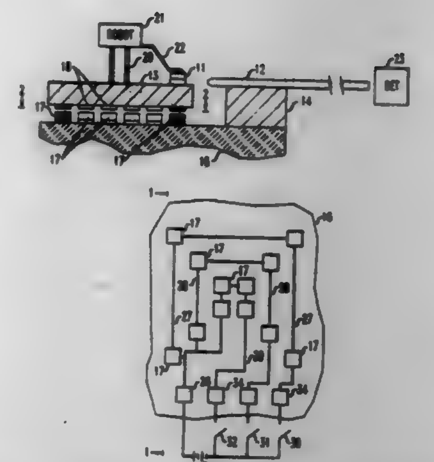

energized to reflow the solder elements and bond the first device with the substrate.

5,700,988
DEVICE FOR FIXING IN A FLUID TIGHT MANNER A THROUGH TUBE IN A DOME-SHAPED WALL OF A COMPONENT OF A NUCLEAR REACTOR
Yves Fournier, Chatenay Le Royal, France, assignor to Framatome, Paris, France
Division of Ser. No. 241,654, May 12, 1994, Pat. No. 5,516,999. This application Aug. 4, 1995, Ser. No. 511,469
Claims priority, application France, May 12, 1993, 93 05727
Int. Cl.[6] B23K *15/00*
U.S. Cl. 219—121.13 **4 Claims**

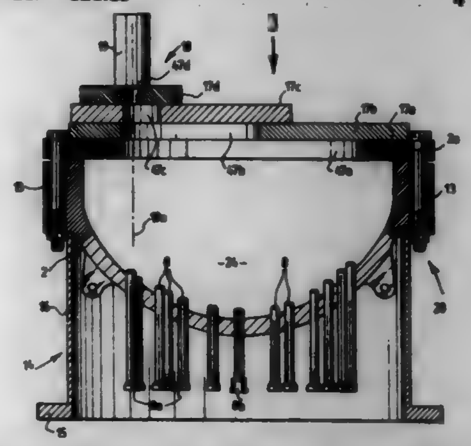

1. A device for electron beam welding in a fluidtight manner a plurality of identical through-tubes spaced from one another in at least one zone of a substantially dome-shaped wall of a nuclear reactor component having an internal concave surface, an external convex surface and an aperture facing the zone of the internal surface of the wall through which the tubes are passing and surrounded by a plane bearing surface, said device comprising:
(a) a first plate adapted to come to bear in a fluidtight manner against the plane bearing surface of the wall and having a first through-aperture;
(b) a second plate rotatively mounted on said first plate around a first axis of rotation perpendicular to said first and second plates, with interposition of a first sliding sealing member, and having a second through-aperture;
(c) a third plate rotatively mounted on said second plate around a second axis of rotation parallel to the first axis of rotation and separate from said first axis of rotation so as to provide an eccentric mounting of said third plate on said second plate, with interposition of a second sealing member, and having a third through-aperture;
(d) a fourth plate rotatively mounted on said third plate around a third axis of rotation parallel to said first and second axes of

rotation, with interposition of a third sliding sealing member, an electron gun for producing said electron beam being fixed on said fourth plate and having a firing axis parallel to said third axis of rotation and spaced from said third axis of rotation by a distance substantially equal to an outside radius of the through-tubes;
(e) rotation of said second and said third plates allowing said firing axis of said electron gun to be aligned on a welding region of any through-tube; and
(f) said first, second and third apertures being superposed so as to allow said electron beam to reach said welding region.

5,700,989
COMBINED LASER AND PLASMA ARC WELDING TORCH
Igor S. Dykhno, 400 25th Ave., #3, San Francisco, Calif. 94121; Igor U. Krivtsun, 252049 Suvorova St., Apt. 154, and Georgi M. Ignatchenko, 252051 Kiev 51, 44 Tupolev, Apt. 36, both of Kiev, Ukraine
Filed Dec. 30, 1994, Ser. No. 366,686
Int. Cl.[6] B23K *26/00;10/00*
U.S. Cl. 219—121.45 **8 Claims**

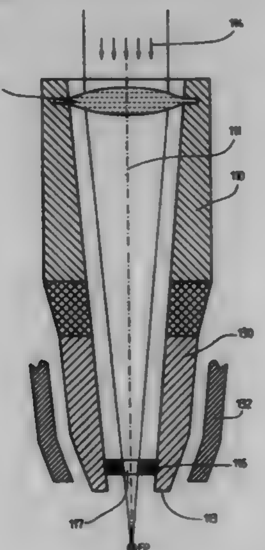

1. A plasmotron torch for applications such as welding combining laser and plasma-arc technologies, and capable of efficiently producing high energy densities at the surface of a workpiece, comprising:
a source of an input laser beam;
a main body having an input end, an output end, and a central axis of revolution;
an optical system disposed at the input end of the main body to direct the input laser beam co-linearly with the central axis, the laser beam being focused at a point outside of the main body and in front of the workpiece;
a cathode placed at the output end of the main body and having a hole in its center through which the laser beam can pass after the beam is directed by the optical system;
a constricting nozzle placed over the cathode;
means for providing a plasma gas into a region between the cathode and constricting nozzle; and
means for forming an electric arc between the cathode and the workpiece, thereby causing the plasma gas to form a plasma which issues from the constricting nozzle as a plasma-jet and interacts with the focused laser beam to form a combined plasma laser discharge.

5,700,990
METHOD FOR REPAIRING A CLOSURE FAULT OF A METAL TUBE CONTAINING AT LEAST ONE OPTICAL FIBER BY LASER WELDING
Géry Marlier, and Didier Fasquel, both of Calais, France, assignors to Alcatel Submarcom, Clichy, France
Filed Jul. 12, 1995, Ser. No. 501,296
Claims priority, application France, Jul. 22, 1994, 94 09104
Int. Cl.[6] B23K *26/00*
U.S. Cl. 219—121.64 **10 Claims**

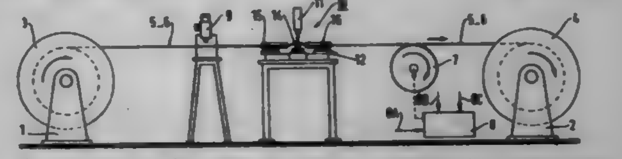

1. A method of repairing a closure defect of a metal tube containing at least one transmission optical fiber, said defect being situated on a closure generatrix of said tube, said method comprising the following steps:
bending and applying mechanical tension to a portion of said tube including said defect to make said closure generatrix convex to force each fiber inside said tube at this defect location to be positioned against said tube on the side opposite said defect, and
laser welding said defect point by point within the convex portion using heat input at each point adjusted to substantially the minimum value required for the weld at said each point.

5,700,991
HEATING DEVICE FOR HEATING A GEL CONTAINER RECEIVED THEREIN
Lida N. Osbern, 1774 E. 1200 Rd., Lawrence, Kans. 66049
Continuation of Ser. No. 208,433, Mar. 9, 1994, abandoned. This application Apr. 25, 1996, Ser. No. 637,401
Int. Cl.[6] F27D *11/00*
U.S. Cl. 219—430 **5 Claims**

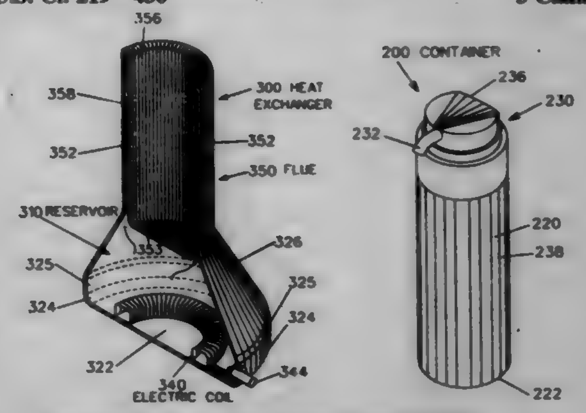

1. A heating device for warming a gel comprising:
a heat reservoir comprising:
a generally flat base having an inner face and an outer face for placement atop a supporting surface;
a generally upstanding wall extending about said base;
a conical surface extending from said wall and having an upper end generally directed to a central flue above said base;
a thermostatically controlled heating coil mounted atop said inner face of said base;
means for providing power to said heating coil;
a fluid in said reservoir and in contact with said powered coil in a heat exchange relationship therewith;
said central flue being positioned atop said heat reservoir comprising:
a lower base vertically displaced from said flat reservoir base and generally surrounded by said upper end of said conical surface, said conical surface extending from said flue base towards said reservoir base;

a channel formed by an inner wall upwardly extending from said lower flue base and presenting a lower end at said lower base of said flue and a top end vertically displaced from said lower base of said flue;
an inlet at said top end of said channel;
an outer wall generally displaced in parallel from said inner wall, said outer wall having a lower end joined to said upper end of said conical surface and a top end joined to said top end of said inner wall, said displacement of said outer wall from said inner wall forming a passage about said channel between said lower and top ends of said inner and outer walls, said passage in communication with said reservoir;
a container adapted to contain gel to be warmed, said container configured for insertion through said flue inlet and having a gel containing portion in contact with said inner wall, said container further comprising:
a spout at the top of said container;
user operable valve means at the top of said container adapted to direct gel through said spout, said flue and container therein being in a heat exchange relationship with said fluid, whereby heat from said reservoir is directed to said flue base and passage for transfer to said container surrounded by said flue whereby to warm the gel in said container;
means in said flue for precluding movement of said container in said flue during operation of said valve means, said preclusion means comprising:
a series of parallel ridges vertically extending along said inner wall of said flue between said lower end and top end of said flue;
a series of ridges along said container, said ridges of said container positioned between the ridges on said inner wall of said flue to diminish rotation between said flue and said container.

5,700,992
ZIGZAG HEATING DEVICE WITH DOWNWARD DIRECTED CONNECTING PORTIONS
Takaaki Honda, Mishima, and Shinichi Mitani, Numazu, both of Japan, assignors to Toshiba Machine Co., Ltd., Japan
Continuation-in-part of Ser. No. 319,248, Oct. 6, 1994, abandoned. This application Sep. 7, 1995, Ser. No. 525,266
Claims priority, application Japan, Oct. 8, 1993, 5-253255
Int. Cl.^{6} H05B *3/02;3/00;* **H01C** *3/00*
U.S. Cl. 219—466 **12 Claims**

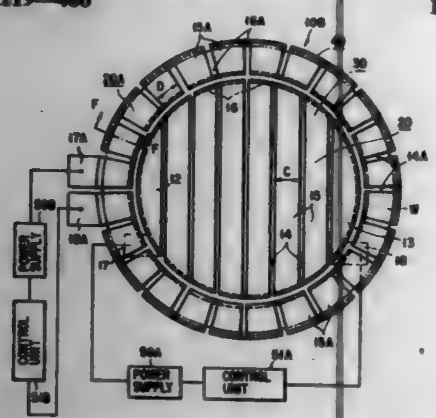

3. A heating device incorporating, in combination, a disk-shaped heater having a heating surface parallel to a surface of an object, and a ring-shaped heater supported in surrounding relation to the disk-shaped heater,
the disk-shaped heater comprising:
a plurality of concentric heating portions having flat portions and bent portions which extend in a radial direction of the heater and having cross sections substantially equal to those of the flat portions, wherein at the time of heating the object, each of the concentric heating portions is a uniform temperature from one end to the other end such that the concentric heating portions have a predetermined temperature; and
connecting portions alternately connecting the bent portions of each adjacent pair of the concentric heating portions of the disk-shaped heater, thereby forming a heating surface in which a current path has ends connected to terminals, the connecting portions extending so that they are not positioned in the same plane as the heating surface, the connecting portions being formed in a plurality of pairs which face each other, with a predetermined gap provided between each pair, such that a temperature distribution of the heating surface becomes uniform at the time of heating the object;
the ring-shaped heater comprising:
a plurality of concentric heating portions having flat portions and bent portions which extend in a radial direction of the heater and have cross sections substantially equal to those of the flat portions, wherein at the time of heating the object, each of the concentric heating portions is a uniform temperature from one end to the other end such the concentric heating portions have a predetermined temperature; and
connecting portions alternately connecting the bent portions of each adjacent pair of the concentric heating portions of the ring-shaped heater, thereby forming a heating surface in which a current path has ends connected to terminals, the connecting portions extending so that they are not positioned in the same plane as the heating surface, the connecting portions being formed in a plurality of pairs which face each other with a predetermined gap provided between each pair, such that a temperature distribution of the heating surface becomes uniform at the time of heating the object, said ring-shaped heater being supported so that the flat portions thereof are in substantially the same plane as the flat portions of the disk-shaped heater.

5,700,993
HEATING APPARATUS CONTROLLED TO UTILIZE LOWER COST ENERGY
John M. Counsell, Merseyside, and John H. Reeves, Cheshire, both of United Kingdom, assignors to EA Technology Limited, Chester, United Kingdom
PCT No. PCT/GB94/01037, § 371 Date Mar. 15, 1996, § 102(e) Date Mar. 15, 1996, PCT Pub. No. WO94/27202, PCT Pub. Date Nov. 24, 1994
PCT Filed May 16, 1994, Ser. No. 549,850
Claims priority, application United Kingdom, May 17, 1993, 9310078
Int. Cl.^{6} H05B *1/02*
U.S. Cl. 219—483 **14 Claims**

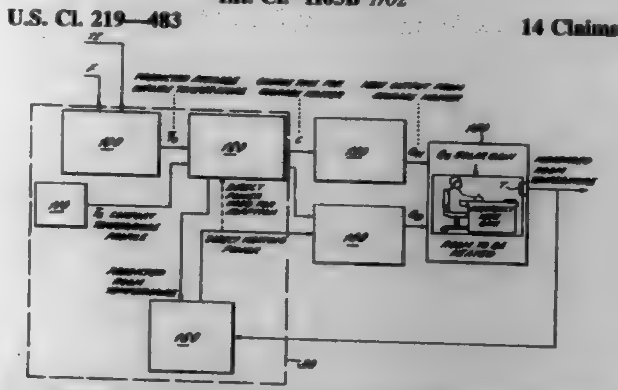

1. Heating control apparatus for use in a heating system having electric heating means for space heating at least one location, said electric heating means comprising storage heating means and direct heating means provided at said location, and temperature measuring means for measuring the temperature at said location, said heating system being connected to an electricity supply having a cost profile indicating variations in electricity cost with time; said heating control apparatus comprising data receiving means for receiving data on said cost profile and weather prediction information; user selection means operable by a user to select a desired temperature for said location and a desired time and duration of said desired temperature; information storage means for storing information defining the thermal response characteristics of said location and said electric heating means; and control means responsive to said data received by said data receiving means, said temperature measuring means, said user selection means, and said stored information to determine the times at which each of said storage heating means and said direct heating means is energized, said control means being operative to control said heating means accordingly in order to achieve said desired temperature for said desired time and duration at said location, and to energize said storage heating means preferentially when the electricity cost is low.

5,700,994
APPARATUS AND FUSER CONTROL METHOD FOR REDUCING POWER STAR FUSER RECOVERY TIME
Barry J. Gheer, Webster; Kenneth R. Rasch, Fairport; Tab A. Tress, Henrietta, and Richard A. Geyer, Farmington, all of N.Y., assignors to Xerox Corporation, Stamford, Conn.
Filed Apr. 1, 1996, Ser. No. 625,309
Int. Cl.^{6} H05B *1/00*
U.S. Cl. 219—497 **7 Claims**

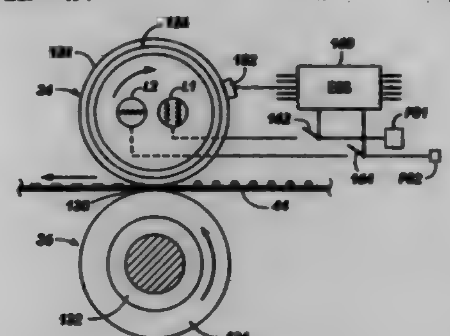

1. A method of reducing a fusing apparatus recovery time from a low energy-saver mode temperature back up to a high fusing temperature, the method comprising:
(a) supplying full power to a heated member of the fusing apparatus to warm the fusing apparatus from a start up temperature to the high fusing temperature;
(b) ending full power supply and then turning a primary power supply on and off so as to control the fusing apparatus temperature at the high fusing temperature;
(c) identifying and timing an idle period that lasts a predetermined length of time during which the fusing apparatus temperature is being controlled at the high fusing temperature;
(d) turning the primary power supply off at the end of the idle period lasting the predetermined length of time, and immediately turning on a secondary power supply for immediately supplying power at an energy-saver mode level to the heated member when the fusing apparatus temperature is still substantially at the high fusing temperature, thereby delaying a drop of the fusing apparatus temperature towards the low energy-saver mode temperature; and
(e) resupplying, as desired at some time, full power to the heated member of the fusing apparatus to reheat the heated member from a relatively higher temperature at such time owing to the delayed drop, back up to the high fusing temperature, thereby resulting in a desirably reduced recovery time from such relatively higher temperature back up to the high fusing temperature.

5,700,995
SUPERPLASTICALLY FORMED PART
Marc R. Matsen, Seattle, Wash., assignor to The Boeing Company, Seattle, Wash.
Division of Ser. No. 151,433, Nov. 12, 1993, Pat. No. 5,420,400, which is a continuation-in-part of Ser. No. 777,739, Oct. 15, 1991, Pat. No. 5,410,132. This application Mar. 17, 1995, Ser. No. 406,349
Int. Cl.^{6} B23K *13/01*
U.S. Cl. 219—615 **9 Claims**

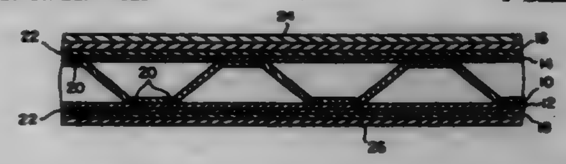

1. A superplastically formed part, comprising a product obtained, in a single heat cycle, by sequentially superplastically forming a part and forming braze joints within the part at selected locations, by
(a) welding together at selected locations at least two sheets of a pack having a plurality of sheets of sheetmetal to form a desired core cell geometry for the part and including braze alloy in the pack between selected sheets at appropriate locations where braze joints will join the adjacent sheets in the part, the sheetmetal exhibiting superplasticity in a superplastic forming temperature range;
(b) inductively heating the pack in a press to the superplastic forming temperature range but to a temperature below the melting point of the braze alloy;
(c) superplastically forming the pack at the superplastic forming temperature range including forming the desired core cell geometry in the part by expanding sheets welded together in step a;
(d) inductively increasing the temperature after superplastic forming form the superplastic forming temperature range to the melting point of the braze alloy to flow the braze alloy in each braze joint and to initiate brazing at the selected locations;
(e) cooling the part below the superplastic forming temperature range to complete braze joints at the selected locations; and
(f) thereafter removing the part with the braze joints from the press.

5,700,996
INDUCTION COOKER WITH POWER SWITCHING CONTROL
Hae-Don Lee, and Jong-Sub Shin, both of Suwon, Rep. of Korea, assignors to Samsung Electronics Co., Ltd., Kyungki-Do, Rep. of Korea
Filed May 23, 1995, Ser. No. 447,556
Claims priority, application Rep. of Korea, Jun. 9, 1994, 94-12981
Int. Cl.^{6} H05B *6/08*
U.S. Cl. 219—626 **3 Claims**

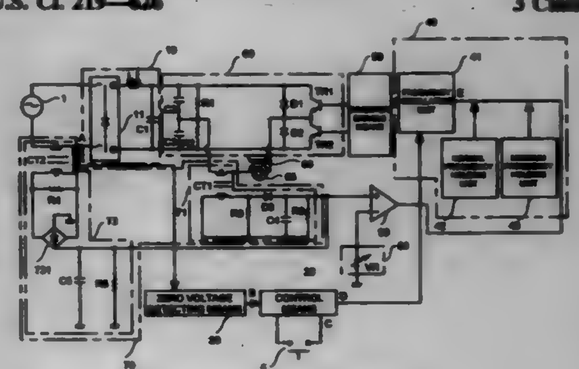

1. An induction heating cooker comprising:

rectifying means for full wave rectifying to a direct current voltage a commercial alternating current voltage input from an alternating current power input terminal;

zero voltage detecting means connected to the alternating current power input terminal for detecting a zero potential of the commercial alternating current voltage input from the alternating current power input terminal;

control means connected to the zero voltage detecting means for synchronizing with the zero potential of the commercial alternating current voltage detected by the zero voltage detecting means to thereby control the overall operations of the induction heating cooker;

variable frequency oscillating means connected to the control means for receiving a control signal generating by the control means to thereby generate an oscillating frequency;

inverter driving means connected to the variable frequency oscillating means for generating a driving signal according to the oscillating frequency generated by the variable frequency oscillating means;

inverter means for receiving the direct current voltage generated from the rectifying means responsive to the driving signal of the inverter driving means to thereby generate a high frequency wave, the inverter means comprising:

a first switching element and a second switching element connected to the inverter driving means for receiving the driving signal output from the inverter driving means to thereby turn on and turn off alternatively,

a heating coil having one side connected to an emitter of the first switching element for receiving a turn on signal from the first switching element to thereby generate an eddy current,

a first resonant capacitor connected to the heating coil in parallel for receiving the turn on signal of the first switching element through the heating coil to thereby form a voltage source while charging and discharging, and

a second resonant capacitor connected to the heating coil for receiving a turn on signal from the second switching element to thereby generate a voltage source while charging and discharging;

current detecting means for detecting a current intensity change applied to the heating coil to thereby supply a predetermined intensity of resonant current to the heating coil driven by the inverter means; and

comparison means for comparing an input current intensity change of the heating coil detected by the current detecting means with a predetermined reference current intensity to thereby generate a comparison voltage signal which is sent to the variable frequency oscillating means to vary the oscillating frequency;

further comprising first and second resistors connected in parallel to the first and second resonant capacitors for decreasing by about half the voltage across the first and second resonant capacitors.

5,700,997

GAME PLAY MEDIA DISPENSER

Takatoshi Takemoto, and Kazunari Kawashima, both of Tokyo, Japan, assignors to Kabushiki Kaisha Ace Denken, Tokyo, Japan

PCT No. PCT/JP94/01377, § 371 Date Mar. 8, 1996, § 102(e) Date Mar. 8, 1996, PCT Pub. No. WO95/07120, PCT Pub. Date Mar. 16, 1995

PCT Filed Aug. 22, 1994, Ser. No. 605,225

Claims priority, application Japan, Sep. 9, 1993, 5-224391; Sep. 9, 1993, 5-224392

Int. Cl.[6] G06K *5/00;* A63F *7/30*

U.S. Cl. 235—1 B 3 Claims

1. A game play media dispenser which comprises a passage for allowing game play media to flow and a gear being formed with a plurality of recesses engaging with game play media on an outer peripheral surface, and while causing said plurality of recesses to engage with game play media flowing through said passage in

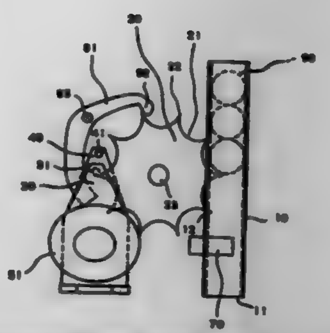

sequence, rotating owing to the weight of the game play media for discharging the game play media into a discharge port of said passage, wherein as many game play media as a given number are discharged through said discharge port by controlling the rotation of said gear, characterized in that

said gear further includes a plurality of teeth in one-to-one correspondence with said plurality of recesses, that

said game play media dispenser further includes:

detection means for detecting game play media discharged through said discharge port;

a first stopper that can move to a first engagement position where it can engage with at least one of said plurality of teeth and a first saving position where it does not engage with any of said plurality of teeth;

a second stopper that can move to a second engagement position where it can engage with at least one of said plurality of teeth and a second saving position where it does not engage with any of said plurality of teeth;

drive means for moving said first stopper to the first engagement position and the first saving position, and moving said second stopper to the second engagement position and the second saving position; and

control means for controlling the moving operation of said first stopper and the moving operation of said second stopper performed by said drive means, that

said second engagement position is a position where said second stopper at said second engagement position engages with any of said plurality of teeth before said gear rotates one recess or more after the engagement of said first stopper with said gear is released, and that

said control means

accepts information indicating the given number and sets the number of media to be discharged smaller than the given number by a predetermined number,

finds the actual number of discharged game play media from the detection result of said detection means, and

after determining that at least the actual number of discharged media has reached the number smaller than the given number by the predetermined number, causes said drive means to move said first stopper to said first engagement position and said second stopper to said second saving position, and to move said first stopper to said first saving position and said second stopper to said second engagement position alternately, until said control means determines that the actual number of discharged media reaches said given number.

5,700,998

DRUG CODING AND DELIVERY SYSTEM

Yoram Palti, 51 Ruth Street, Haifa 34404, Israel

Filed Oct. 31, 1995, Ser. No. 550,930

Int. Cl.[6] G06F *17/00;* G06K *7/10*

U.S. Cl. 235—375 5 Claims

1. A method of delivering a drug pill to a patient, the method comprising:

(a) placing a machine readable bar code on the outer surface of the pill, the code comprising identification information including the name and dosage form of the drug for insuring proper administration of the drug to the patient;

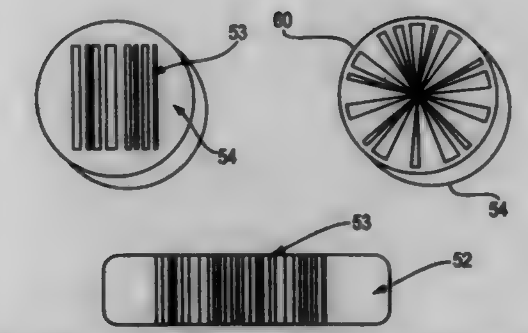

(b) reading the bar code identification information from the pill with a code reader;

(c) reading desired drug delivery information for the patient from a drug delivery information file with a code reader;

(d) comparing the identification information on the pill with the desired drug delivery information;

(e) generating an alarm upon detection of discrepancies between the pill identification information and the desired drug delivery information; and

(f) delivering the drug pill to the patient in the absence of the generation of an alarm in accordance with step (e).

5,700,999

BAR CODE BASED REFUELING SYSTEM

Stanley H. Streicher, 943 Pepperidge Ter., Boca Raton, Fla. 33486, and Guillermo A. Warley, 11232 NW. 44th St., Coral Springs, Fla. 33065

Filed Jul. 28, 1995, Ser. No. 508,584

Int. Cl.[6] G06F *7/08;* G06K *5/00*

U.S. Cl. 235—381 11 Claims

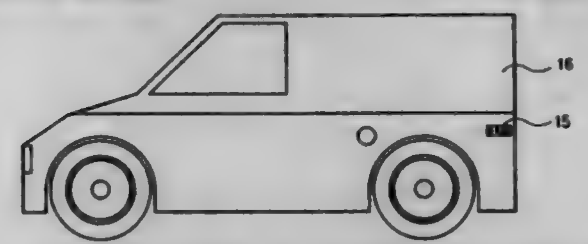

1. A system for refueling only authorized vehicles, comprising:

means for reading bar code information disposed on a vehicle to determine if said vehicle is authorized for refueling;

means for enabling a fuel pump if a valid vehicle identification is read by said means for reading;

means for disabling said fuel pump after a predetermined time period; and

means for guaranteeing the fuel pump is disabled when the system is initially powered.

5,701,000

CODE READER AND CODE READING METHOD FOR READING CODE PRINTED ON SURFACE OF PRINTING MEDIUM

Masashi Suzuki, Mishima, Japan, assignor to Kabushiki Kaisha TEC, Shizuoka, Japan

Filed Jul. 10, 1995, Ser. No. 500,185

Claims priority, application Japan, Jul. 15, 1994, 6-164009

Int. Cl.[6] G06K *7/10*

U.S. Cl. 235—462 25 Claims

1. A code reader for reading a code printed on a surface of a printing medium, comprising:

photoelectric means for converting light reflected from the code into an electric signal;

an amplifier for amplifying the electric signal converted by the photoelectric means;

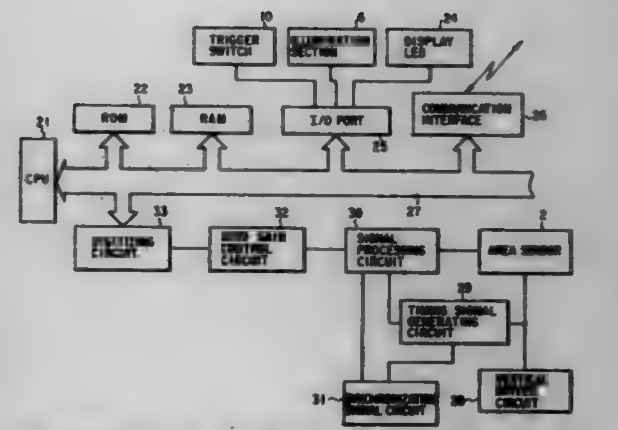

gain adjusting means for adjusting a gain of the amplifier such that a summit level of the electric signal can be raised to a predetermined upper limit level; and

digitizing means for converting the electric signal amplified by the amplifier into a binary signal, using a predetermined level.

5,701,001

OPTICAL BAR CODE READING APPARATUS WITH SIGNAL PROCESSING CIRCUIT FOR ELIMINATING REGULAR REFLECTION CONDITION

Shin Sugifune; Tsutomu Kanno, and Hajime Nabeya, all of Miyagi-ken, Japan, assignors to Alps Electric Co., Ltd., Tokyo, Japan

Division of Ser. No. 512,052, Aug. 7, 1995. This application Jan. 13, 1997, Ser. No. 782,137

Claims priority, application Japan, Sep. 7, 1994, 6-214023

Int. Cl.[6] G06K *7/10*

U.S. Cl. 235—472 4 Claims

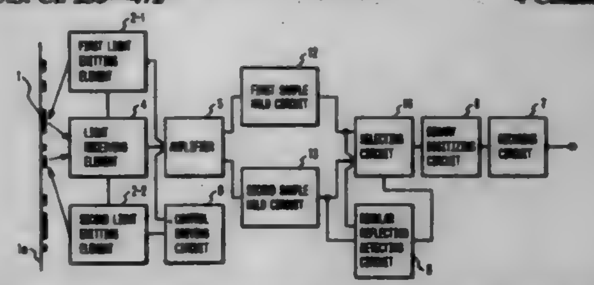

1. An optical reading apparatus for reading a linear recording printed on an information recording surface, the optical reading apparatus comprising:

a plurality of light emitting elements for emitting light beams in different directions toward the information recording surface;

a light receiving element for receiving reflected light from the information recording surface and for generating a recording read signal;

a signal processing section for converting the recording read signal from said light receiving element into a display signal; and

a controlling driving section for driving said plurality of light emitting elements;

wherein said plurality of light emitting elements are driven by said controlling driving section so as to emit intermittent light beams at timings different from each other; and

wherein said signal processing section includes a plurality of conversion processing routes, each of the conversion processing routes including means for individually performing conversion processing of a plurality of recording read signals obtained from one said plurality of light emitting elements, said signal processing section selectively extracting and outputting, as a display signal, a selected one of the recording read signals obtained by the conversion processing by a selected one of said plurality of conversion processing routes which omits a regular reflection condition.

5,701,002
IDENTIFICATION CARD AND ITS MANUFACTURE
Tadahiro Oishi; Toshifumi Onishi, and Yasuo Yoshioka, all of Osaka, Japan, assignors to Shoei Printing Co., Ltd.; Toyobo Co., Ltd., and Marusho Co., Ltd., all of Osaka, Japan
Filed Feb. 8, 1996, Ser. No. 599,342
Claims priority, application Japan, Feb. 9, 1995, 7-021861; Jul. 5, 1995, 7-169690
Int. Cl.^{6} C06K *19/00; 19/106*
U.S. Cl. 235—487 **24 Claims**

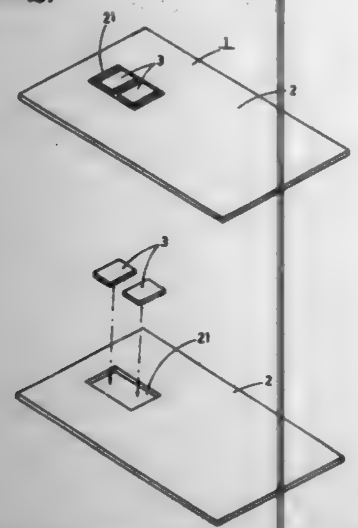

1. A method of producing an identification card having an identification signal generation means therein, comprising:
forming an aperture or concave portion having a larger diameter than the outer diameter of the identification signal generation means in a substantially unoriented non-crystallized polyethylene terephthalate resin sheet having a larger thickness than the thickness of the identification signal generation means; and
heating the non-crystallized resin sheet, having the identification signal generation means in the aperture or concave portion, to crystallize the resin sheet, thus forming a substantially unoriented crystallized polyethylene terephthalate resin sheet;
whereby the aperture or concave portion shrinks, by the heating, to hold the identification signal generation means in the crystallized resin sheet.

5,701,003
INTENSITY COMPENSATED SCANNING SYSTEM
Thomas J. Chisholm, Milton, Mass.; Gary Richard, Lincoln, R.I., and Alexander Rysin, Stoughton, Mass., assignors to Computer Identics Corporation, Canton, Mass.
Filed Oct. 22, 1996, Ser. No. 735,421
Int. Cl.^{6} G01J *1/32*
U.S. Cl. 250—205 **6 Claims**

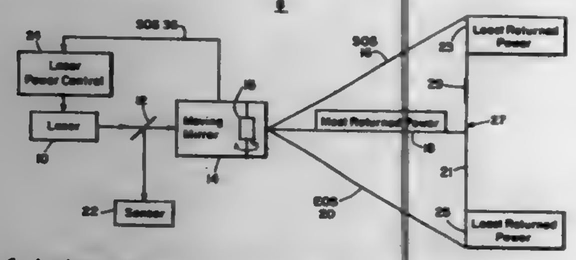

1. An intensity compensated scanning system comprising:
laser means for providing a laser beam;
scanner means for sweeping said laser beam in an arcuate path across a surface to be scanned;
means for sensing the return laser beam reflected from the surface to be scanned;
means for quantifying the decrease in the intensity of the return laser beam at the scan extremity portion relative to the intermediate scan portion; and
means, responsive to said means for quantifying, for varying the power to said laser means at the scan extremity portion relative to that at the intermediate scan portion for balancing the intensity of the return laser beam reflected from the surface to the said means for sensing.

5,701,004
DRIVING CIRCUIT FOR ELECTRON MULTIPLYING DEVICES
Takanori Nakaya, Hamamatsu, Japan, assignor to Hamamatsu Photonics K.K., Shizuoka-ken, Japan
Filed Sep. 13, 1995, Ser. No. 527,536
Claims priority, application Japan, Sep. 13, 1994, 6-219015
Int. Cl.^{6} H01J *40/14*
U.S. Cl. 250—207 **15 Claims**

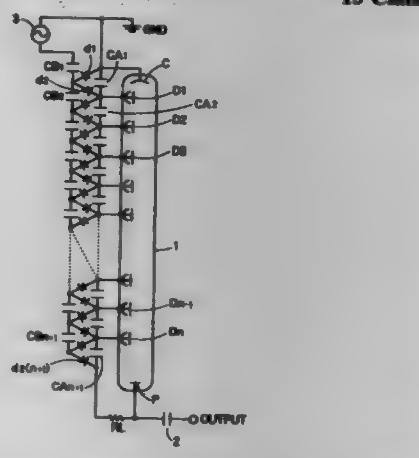

1. A driving circuit for an electron multiplying device, comprising:
a housing having a first voltage equal to a ground level;
a cathode set to a voltage substantially equal to said ground level so that an electric field is not developed between said housing and said cathode;
an anode applied with a second voltage higher than said first voltage;
multiple stages of dynodes arranged between said cathode and said anode; and
voltage multiplying means, including a plurality of diodes and a plurality of capacitors, said plurality of capacitors being connected to respective ones of said multiple stages of dynodes individually, for applying a voltage charged across each of said plurality of capacitors to a corresponding dynode wherein said multiple stages of dynodes are applied with voltages that increase with proximity of a dynode to said anode.

5,701,005
COLOR SEPARATING DIFFRACTIVE OPTICAL ARRAY AND IMAGE SENSOR
Mark M. Meyers, Hamlin, N.Y., assignor to Eastman Kodak Company, Rochester, N.Y.
Filed Dec. 27, 1995, Ser. No. 579,532
Int. Cl.^{6} G01J *3/50*
U.S. Cl. 250—226 **7 Claims**

1. A color sensor comprising:
a diffractive element having at least one surface formed as a plurality of blazed diffractive features that are elliptically curved and decentered so as to angularly disperse and focus incident light into spectral components based on the wavelength of the incident light; and

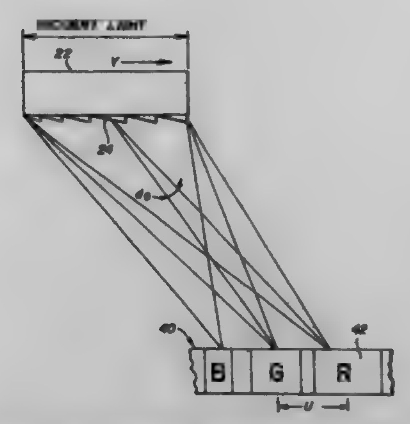

a plurality of photosensitive elements positioned and sized to receive the dispersed spectral components of the incident light.

5,701,006
METHOD AND APPARATUS FOR MEASURING DISTANCES USING FIBER OPTICS
Philip R. Schaefer, Sedona, Ariz., assignor to Simula Inc., Phoenix, Ariz.
Filed Nov. 21, 1995, Ser. No. 561,590
Int. Cl.^{6} G01J *1/42*
U.S. Cl. 250—227.16 **24 Claims**

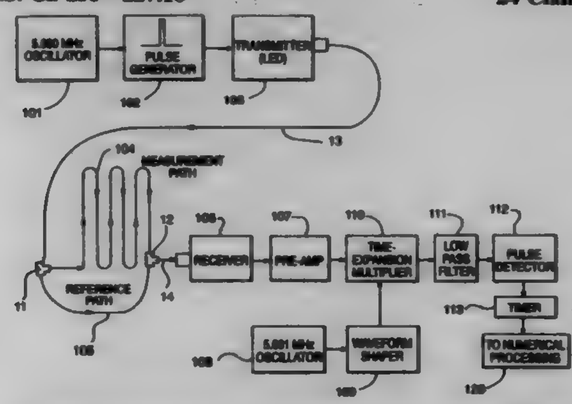

1. An apparatus for measuring strain in a structure comprising:
(a) an optical source connected to a first end of a first connecting optical fiber;
(b) means for modulating the optical source such that it emits source optical signals at a first frequency;
(c) a first beam splitter having one input end, at least one measurement output end, and one reference output end, wherein a second end of the first optical fiber is connected to the input end of the first beam splitter, such that the source optical signals are split into at least one measurement optical signal and a reference optical signal;
(d) at least one measurement optical fiber, wherein a first end of each measurement optical fiber is connected to one of the output ends of the first beam splitter, such that the at least one measurement optical signal propagates within the at least one measurement optical fiber;
(e) a reference optical fiber, wherein a first end of the reference optical fiber is connected to a reference output end of the first beam splitter, such that the reference optical signal propagates within the reference optical fiber;
(f) a second beam splitter having one output end, at least one measurement input end, and one input reference end, wherein a second end of each measurement optical fiber is connected to one of the measurement input ends of the second beam splitter, and a second end of the reference optical fiber is connected to the input reference end of the second beam splitter, such that the at least one measurement optical signal and the reference optical signal propagate out of the output end of the second beam splitter;
(g) a time-expansion multiplier having one output end and two input ends;
(h) a second connecting optical fiber connecting the output end of the second beam splitter to a means for converting optical signals into electric signals;
(i) means for generating electric signals at a second frequency electrically connected to one of the two input ends of the time-expansion multiplier, wherein the means for converting optical signals to electric signals is connected to the other input end of the time-expansion multiplier;
(j) filter means for eliminating any high-frequency components from signals output at the output end of the time-expansion multiplier, said filter means having an input end and an output end, with the input end of the filter means being electrically connected to the output end of the time-expansion multiplier;
(k) signal detector means, having one input end and one output end, said output end being connected to the filter means, for detecting the arrival time of electrical signals received from the filter means;
(l) timer means for measuring the time interval between the arrival of electrical signals at the signal detector means; and
(m) means for calculating the difference in distance between the optical path travelled within the measurement optical fibers and the optical path travelled within the reference optical fibers.

5,701,007
METHOD OF ALIGNING A LIGHT PATHWAY FOR AN OPTICS APPARATUS
Robert J. Figueria, Jr., San Jose, Calif., assignor to Siemens Components, Inc., Cupertino, Calif.
Continuation of Ser. No. 221,121, Mar. 31, 1994, abandoned. This application Oct. 15, 1996, Ser. No. 730,250
Int. Cl.^{6} G01D *5/34*
U.S. Cl. 250—231.13 **8 Claims**

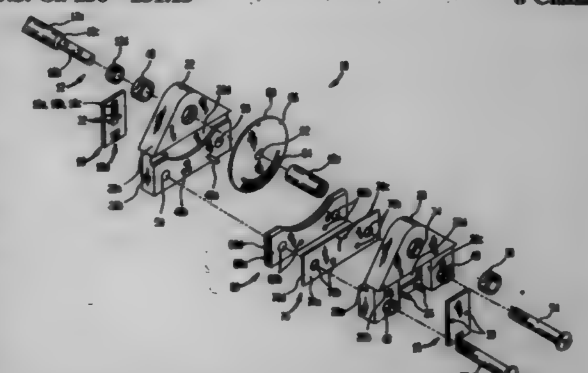

1. A method of establishing a radiation pathway that is substantially free of misalignment between a radiation source, a radiation sensor and a radiation modulator interposed therebetween comprising the steps of:
(a) positioning the source, the modulator and the sensor to be substantially aligned parallel with a longitudinal axis by putting a first optic block including the source, a second optic block including the sensor, and a shaft sized to be securely held by the modulator in simultaneous contact with a reference tool defining said longitudinal axis; and
(b) securing the first optic block and the second optic block to maintain the alignment of the source, the shaft and the sensor.

5,701,008

INTEGRATED INFRARED MICROLENS AND GAS MOLECULE GETTER GRATING IN A VACUUM PACKAGE

Michael Ray, Goleta, and Adam M. Kennedy, Santa Barbara, both of Calif., assignors to HE Holdings, Inc., Los Angeles, Calif.

Filed Nov. 29, 1996, Ser. No. 758,408

Int. Cl.[6] G01J *5/08;5/06*

U.S. Cl. 250—352 **20 Claims**

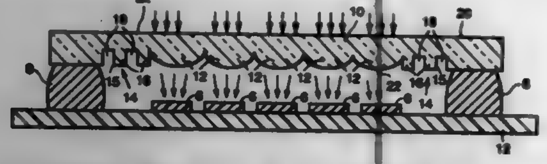

17. An infrared (IR) window that is substantially transparent to at least some wavelengths of IR radiation, comprising:

a first surface;

a second surface having a portion contoured to form a plurality of microlenses and another portion contoured to form a plurality of grating columns defined by a plurality of recesses; and

a getter material positioned on said grating column portion of said second surface adapted to chemically react with gas molecules to remove said gas molecules.

5,701,009

GAS DETECTION DEVICES

Richard F. Griffiths, Altrincham, and Christopher David Jones, Salisbury, both of United Kingdom, assignors to The Secretary of State for Defence in Her Britannic Majesty's Government of the United Kingdom of Great Britain and Northern Ireland of Defence and Evaluation Research Agency, Hants, United Kingdom

PCT No. PCT/GB94/00411, § 371 Date Sep. 18, 1995, § 102(e) Date Sep. 18, 1995, PCT Pub. No. WO94/20845, PCT Pub. Date Sep. 15, 1994

PCT Filed Mar. 3, 1994, Ser. No. 513,886

Claims priority, application United Kingdom, Mar. 5, 1993, 9304553; Apr. 26, 1993, 9308615; May 25, 1993, 9310785

Int. Cl.[6] G01F *1/64*

U.S. Cl. 250—356.1 **8 Claims**

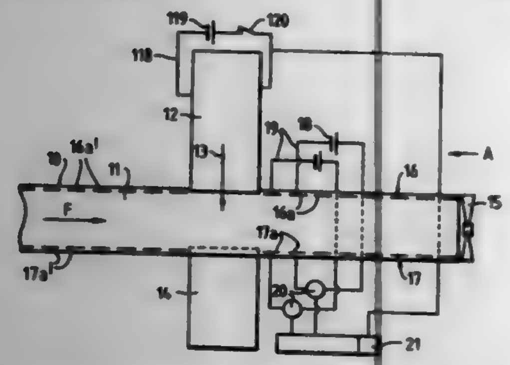

1. A method of measuring the velocity of flow, of an airflow containing a test gas, through a detector of the type wherein the flow is passed through an Ultra Violet (UV) light bean and then between two potentially biased electrodes, wherein at least one of the electrodes is in the form of a series of electrically separate segments extending in a downstream direction, said method including the steps of:

calibrating the detector

passing the airflow through the UV light beam,

comparing readings of currents caused by ions falling on consecutive segment to calibration currents and

providing said flow velocity based upon said comparison.

5,701,010

DUAL BAND POLARITY REVERSING MULTIPLEXER

Robert J. Martin, Orlando, Fla., assignor to Martin Marietta Corporation, Bethesda, Md.

Filed Dec. 18, 1995, Ser. No. 574,145

Int. Cl.[6] G01J *1/00*

U.S. Cl. 250—370.06 **5 Claims**

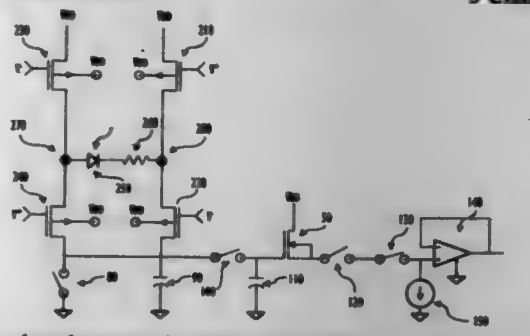

1. A photodetector cell which is selectable to be responsive to radiation in a first spectral band or a second spectral band, said photodetector cell comprising:

a series opposed pair of a first photodetector responsive to radiation in said first spectral band and a second photodetector responsive to radiation in said second spectral band, said series opposed pair having a first end and a second end and being arranged so that when a first bias is applied across said series opposed pair through said first end and said second end, said first photodetector is in a photodetecting reverse biased state and said second photodetector is in a forward biased conducting state and when a second bias opposite to said first bias is applied across said series opposed pair through said first end and said second end, said second photodetector is in a photodetecting reverse biased state and said first photodetector is in a forward biased conducting state;

a first switching element for connecting said first end of said series opposed pair to a first potential only when said first switching element is in a conducting state;

a second switching element for connecting said second end of said series opposed pair to a second potential less than said first potential only when said second switching element is in a conducting state;

a third switching element for selectably connecting said second end of said series opposed pair to said first potential only when said third switching element is in a conducting state; and

a fourth switching element for selectably connecting said first end of said series opposed pair to said second potential only when said fourth switching element is in a conducting state,

such that said first bias is applied across series opposed pair when said first and second switching elements are both in said conducting state and said third and fourth switching elements are not in said conducting state and

such that said second bias is applied across series opposed pair when said third and fourth switching elements are both in said conducting state and said first and second switching elements are not in said conducting state.

5,701,011

APPARATUS FOR PICKING UP IMAGE BY ELECTROMAGNETIC WAVE RAY

Koichi Ohmori, Toyonaka; Toshiyoshi Yamamoto, Sanda; Yuji Matsuda, Takatsuki; Yoshihiko Tanji, Osaka, and Takayoshi Yuuzu, Ikama-gun, all of Japan, assignors to Matsushita Electric Industrial Co., Ltd., Osaka, Japan

Filed May 30, 1996, Ser. No. 655,560

Claims priority, application Japan, May 31, 1995, 7-133316

Int. Cl.[6] H01L *27/148;31/0224*

U.S. Cl. 250—370.09 **7 Claims**

1. An apparatus for picking up an image using electromagnetic wave rays of comprising:

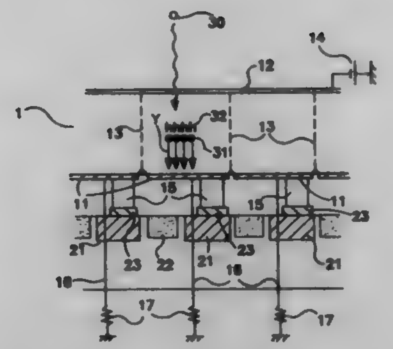

a compound semiconductor substrate for generating an electric charge by irradiation with electromagnetic wave rays,

a charge-coupled device (CCD) for converting the electric charge into a video signal, said CCD having a plurality of picture elements,

a plurality of split electrodes disposed on at least one surface of the compound semiconductor substrate, each split electrode being separated from each other,

a grounding wire disposed in each split electrode, and

a plurality of electrodes, each electrode being disposed on each surface of each picture element,

wherein each split electrode and each electrode are electrically connected with each other,

the electric charge generated in the compound semiconductor substrate is collected in each split electrode,

the electric charge collected in each split electrode is provided to each picture element, and

part of the electric charge collected in each split electrode is discharged through the grounding wire.

5,701,012

FLUORESCENT BIOLOGICAL PARTICLE DETECTION SYSTEM

Jim Yew-Wah Ho, Alberta, Canada, assignor to Her Majesty the Queen in right of Canada, as represented by the Minister of National Defence, Ottawa, Canada

Filed Mar. 19, 1996, Ser. No. 616,475

Int. Cl.[6] G01N *21/64*

U.S. Cl. 250—461.2 **22 Claims**

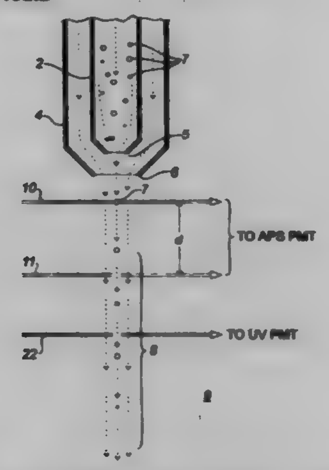

1. Apparatus for identifying the existence of viable biological particles within an airstream containing a mixture of biologically viable end biologically inert particles, comprising:

means for directing the particles individually and sequentially along a substantially linear path through air;

a source emitting an ultraviolet laser beam directed to contact each particle moving along its linear path in the air, said beam having a wavelength operative to excite biomolecules contained therein to produce fluorescence;

means for measuring the intensity of the fluorescence emitted from each particle and producing a signal indicative thereof; and

means for comparing each particle's fluorescence intensity signal against pre-determined criteria and establishing whether that particle is a biologically viable particle or an inert particle.

5,701,013

WAFER METROLOGY PATTERN INTEGRATING BOTH OVERLAY AND CRITICAL DIMENSION FEATURES FOR SEM OR AFM MEASUREMENTS

Liang-Choo Hsia, Taipei, and Thomas Chang, Hsin-Chu, both of Taiwan, assignors to Mosel Viltelic, Inc., Taipei, Taiwan

Filed Jun. 7, 1996, Ser. No. 660,486

Int. Cl.[6] H01J *37/304*

U.S. Cl. 250—491.1 **18 Claims**

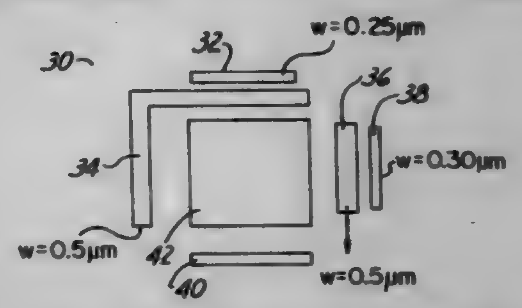

1. A wafer metrology pattern for use in a critical dimension analysis of a semiconductor device configuration comprising:

a first central section for providing a central reference point;

a plurality of sections positioned concentrically around said central section including a plurality of spaces between each of said plurality of sections; and

a plurality of compensating lines positioned radially about at least two particular plurality of said sections to compensate for said plurality of spaces.

5,701,014

PROJECTION LITHOGRAPHY APPARATUS

Steven David Berger, Basking Ridge; James Alexander Liddle, Scotch Plains, and George Patrick Watson, Harrison, all of N.J., assignors to Lucent Technologies Inc., Murray Hill, N.J.

Division of Ser. No. 379,052, Jan. 27, 1995, Pat. No. 5,561,008.

This application Jun. 25, 1996, Ser. No. 673,705

Int. Cl.[6] H01J *37/317*

U.S. Cl. 250—492.22 **5 Claims**

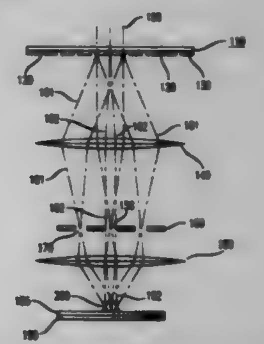

1. An apparatus for projection lithography comprising:

a lens system comprising at least one lens and a back focal plane filter positioned in the back focal plane or some equivalent conjugate plane of a lens in the lens system, the back focal plane filter having a first aperture which is adapted to transmit insignificantly scattered radiation from a radiation source

therethrough and at least one other aperture that is adapted to transmit a portion of significantly scattered radiation from the radiation source therethrough wherein the lens system directs the significantly scattered radiation and the insignificantly scattered radiation to desired locations.

5,701,015
INFRARED ILLUMINATION SYSTEM FOR DIGITAL CAMERA
Arnold Lungershausen, West Henrietta, and Carl Lawrence Holden, Rochester, both of N.Y., assignors to Eastman Kodak Company, Rochester, N.Y.
Filed Aug. 19, 1996, Ser. No. 699,315
Int. Cl.^{6} H05B *41/29*
U.S. Cl. 250—495.1 **9 Claims**

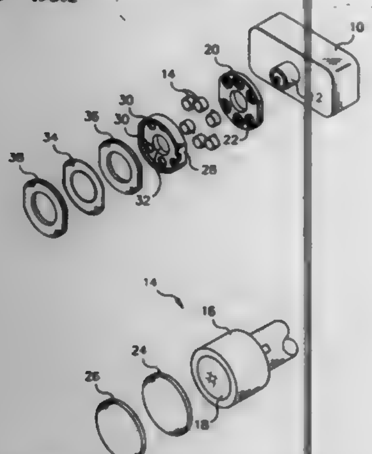

1. An infrared illumination system for a digital camera having a taking lens, comprising:
a) a plurality of infrared emitting diodes arranged around the taking lens, each diode being contained in a package having an infrared transparent window;
b) first diffuser means located over the windows of the packages for diffusing the light from the infrared light emitting diodes; and
c) second diffuser means spaced apart from the first diffuser means for further diffusing the light from the light emitting diodes.

5,701,016
SEMICONDUCTOR DEVICE AND METHOD FOR ITS MANUFACTURE
Jeremy H. Burroughes, and Donald D. Arnone, both of Cambridge, United Kingdom, assignors to Kabushiki Kaisha Toshiba, Kawasaki, Japan
Filed Nov. 24, 1995, Ser. No. 562,605
Claims priority, application United Kingdom, Nov. 24, 1994, 9423758; Oct. 25, 1995, 9521885
Int. Cl.^{6} H01L *29/06;31/0328;31/0336;31/072*
U.S. Cl. 257—24 **20 Claims**

1. A semiconductor device comprising;.
a stacked structure formed on a top surface of a substrate to form a mesa and having a plurality of layers
wherein the mesa defines an oblique side surface oblique with respect to the top surface of the substrate and thereby intersecting edges of said plurality of layers, said edges thereby presenting an edge direction where intersected,
at least one layer overlying the oblique side such that carriers can flow in a plane parallel to the oblique side surface, said plurality of layers providing rear barrier confinement potentials for isolating regions of said carriers, and

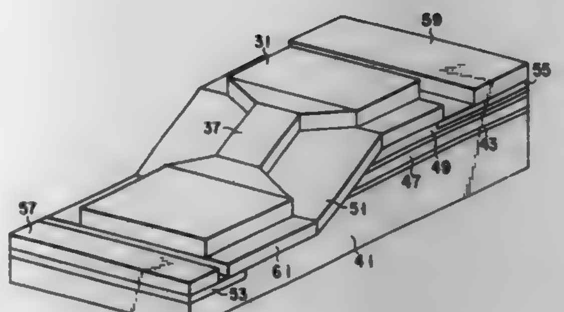

narrowing means extending parallel to the oblique side surface and having a reduced dimension in the center part thereof measured in the transverse direction of the oblique side surface for narrowing said regions of carriers to form respective quantum dots, thereby causing carriers to flow over the edges of the plurality of layers, only in a direction which is inclined with respect to the said edge direction.

5,701,017
SEMICONDUCTOR DEVICE AND METHOD FOR ITS MANUFACTURE
Nalin K. Patel, and Jeremy H. Burroughes, both of Cambridge, United Kingdom, assignors to Kabushiki Kaisha Toshiba, Kawasaki, Japan
Filed Nov. 14, 1995, Ser. No. 557,843
Claims priority, application United Kingdom, Nov. 15, 1994, 9423262; Japan, Oct. 25, 1995, 9521884
Int. Cl.^{6} H01L *29/201*
U.S. Cl. 257—27 **16 Claims**

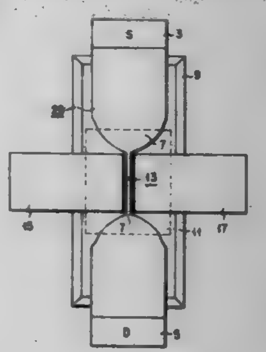

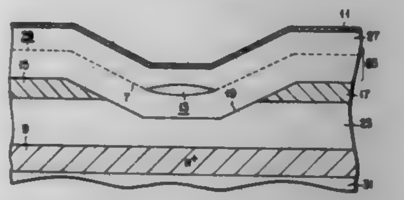

1. A semiconductor device comprising a heterostructure which comprises an active layer in which carriers can flow within a conduction channel, the heterostructure including a recessed region in which part of the conduction channel is disposed and substantially in the same plane as a pair of side gates, thereby defining a restricted conduction region of said conduction channel.

5,701,018
SEMICONDUCTOR DEVICE HAVING PARALLEL CONNECTION OF AN INSULATED GATE BIPOLAR TRANSISTOR AND A DIODE
Koumei Hanaoka; Naoki Sakurai, both of Hitachi, and Mutsuhiro Mori, Mito, all of Japan, assignors to Hitachi, Ltd., Tokyo, Japan
Filed Feb. 21, 1995, Ser. No. 391,568
Claims priority, application Japan, Feb. 18, 1994, 6-020841
Int. Cl.^{6} H01L *29/74;31/111;29/76;* **H02H** *7/122*
U.S. Cl. 257—140 **14 Claims**

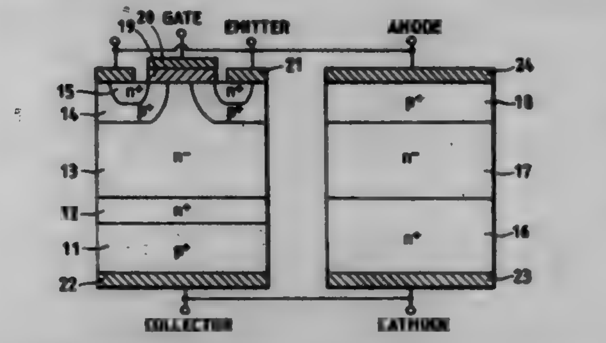

1. A semiconductor device comprising:
at least a pair consisting of an insulated gate bipolar transistor and a diode, both of which are in a reverse parallel connection;
wherein the resistivity of a base layer of lowest impurity concentration in said diode is lower than that of a base layer of lowest impurity concentration in said insulated gate bipolar transistor; and
wherein the breakdown voltage of said insulated gate bipolar transistor at the time of switching from a conduction state to a blocking state is lower than the breakdown voltage of said insulated gate bipolar transistor and the breakdown voltage of said diode at the time of said blocking state.

5,701,019
SEMICONDUCTOR DEVICE HAVING FIRST AND SECOND STACKED SEMICONDUCTOR LAYERS, WITH ELECTRICAL CONTACT TO THE FIRST SEMICONDUCTOR LAYER
Hidetoshi Matsumoto, Kodaira; Masamitsu Yazawa, Yokohama, and Kenji Hiruma, Tokorozawa, all of Japan, assignors to Hitachi, Ltd., Tokyo, Japan
Continuation of Ser. No. 206,923, Mar. 7, 1994, abandoned. This application Aug. 21, 1995, Ser. No. 517,125
Claims priority, application Japan, Mar. 12, 1993, 5-51664
Int. Cl.^{6} H01L *31/0328;31/336;31/072;31/109*
U.S. Cl. 257—192 **48 Claims**

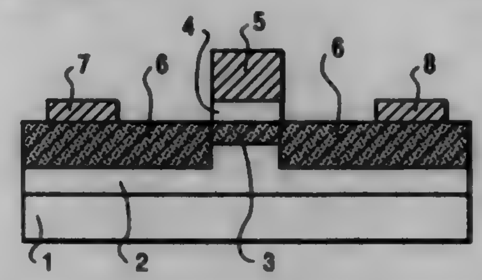

1. A contact, for a semiconductor device, comprising a first semiconductor layer, a second semiconductor layer provided on the first semiconductor layer so as to form a junction therebetween, the second semiconductor layer having a lower surface adjacent the first semiconductor later and side surfaces extending from the lower surface in a direction away from the first semiconductor layer, and impurity-doped third semiconductor layers positioned such that the first semiconductor layer is between the third semiconductor layers, the third semiconductor layers being selectively grown and being formed of different layers than that of said first semiconductor layer, the third semiconductor layers being in electrical contact with the first semiconductor layer and physically contacting opposed sides of the first semiconductor layer, said third semiconductor layers physically contacting the second semiconductor layer without physically contacting the side surfaces of the second semiconductor layer.

5,701,020
PSEUDOMORPHIC STEP-DOPED-CHANNEL FIELD-EFFECT TRANSISTOR
Wen-Chau Liu, and Lih-Wen Laih, both of Tainan, Taiwan, assignors to National Science Council, Taipei, Taiwan
Filed Jan. 31, 1997, Ser. No. 792,495
Int. Cl.^{6} H01L *29/812*
U.S. Cl. 257—192 **8 Claims**

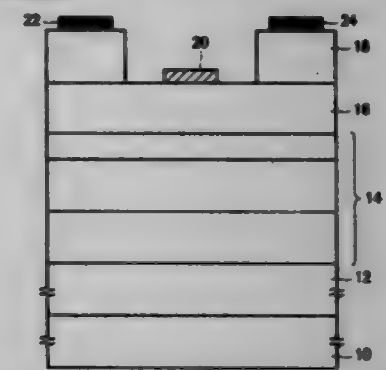

1. A pseudomorphic step-doped-channel field-effect transistor, comprising:
a semi-insulating GaAs substrate;
an undoped GaAs layer formed on said GaAs substrate to serve as a buffer layer;
an n-doping InGaAs layer formed in said undoped GaAs layer to serve as a channel layer, wherein the doping concentration increases step by step from the interface of said n-doping InGaAs layer and said undoped GaAs layer;
an undoped AlGaAs layer formed on said n-doping InGaAs layer;
an n-doping GaAs layer formed on said undoped AlGaAs layer; and
metal layers respectively formed on said undoped AlGaAs layer and said n-doping GaAs layer to serve as a gate, a drain and a source of said pseudomorphic step-doped-channel field-effect transistor, respectively.

5,701,021
CELL ARCHITECTURE FOR MIXED SIGNAL APPLICATIONS
Patrick Yin, Fremont, Calif., assignor to Aspec Technology, Inc., Sunnyvale, Calif.
Filed Dec. 19, 1995, Ser. No. 574,497
Int. Cl.^{6} H01L *27/092;27/118*
U.S. Cl. 257—208 **15 Claims**

1. An integrated circuit cell structure comprising:
a semiconductor substrate in which are located a plurality of columns of semiconductor material of a first conductivity type and a plurality of columns of semiconductor material of a second conductivity type;
active areas formed within the columns to which can be connected conductive material, thereby forming active regions, each of the active regions including a contact point region, the contact point region including a plurality of contacts for electrical connection thereto; the contact point region including an extension portion substantially adjacent to an end of

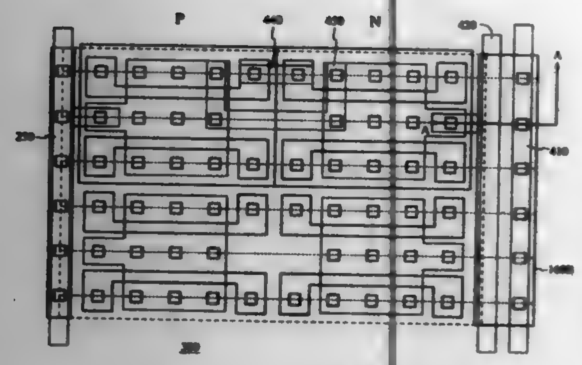

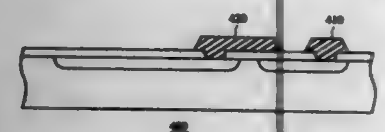

each of the active areas for allowing for the connection outside the active region to avoid interference with other connections to the structure; and

tap regions formed outside the columns, each of the tap regions being associated with one pair of the columns, at least one of the tap regions being capable of accommodating a plurality of electrically isolated metal lines, each of the tap regions being doped with an opposite material than their respective columns thereby allowing current and voltage characteristics of the columns to be controlled.

5,701,022

SEMICONDUCTOR MEMORY DEVICE WITH TRENCH CAPACITOR

Walter-Ulrich Kellner, Markt Schwaben; Karl-Heinz Küsters, München; Wolfgang Müller, Putzbrunn, and Franz-Xaver Stelz, Dachau, all of Germany, assignors to Siemens Aktiengesellschaft, Munich, Germany

Continuation of Ser. No. 765,042, Sep. 24, 1991, abandoned, which is a continuation-in-part of Ser. No. 527,121, May 22, 1990, abandoned. This application Feb. 4, 1994, Ser. No. 192,188

Claims priority, application European Pat. Off., May 22, 1989, 89109158

Int. Cl.⁶ H01L *27/108;29/76;29/94;31/119*

U.S. Cl. 257—300 **7 Claims**

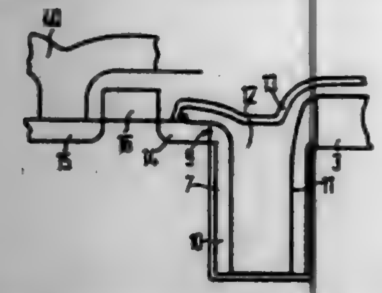

1. A memory matrix, comprising at least four memory cells of a semiconductor memory configuration in a semiconductor substrate having bit lines and word lines, each of said memory cells including:

a given width,

one trench memory capacitor and one MOS selection transistor having two conducting regions and a gate electrode,

each memory capacitor being connected to one of said conducting regions of a transistor, the other of said conducting regions of said transistor being connected to one of said bit lines, and said gate electrode of said transistor being connected to one of said word lines,

an insulating oxide region having substantially vertical side walls,

a trench adjacent to said insulating oxide region and adjacent to one of said conducting regions without surrounding said conducting regions,

said trench having an inner trench wall surface and a trench bottom, and said capacitors each being disposed in one trench for each memory cell,

a first insulating layer completely covering said inner trench wall surface and said trench bottom,

a first electrode of the capacitor disposed perpendicular to the substrate surface on said first insulating layer completely inside said trench,

a second insulating layer disposed on said first electrode and on said trench bottom,

a second electrode disposed vertically on said second insulating layer in said trench, and

a contact defined by a small opening formed in said first insulating layer on one side of said inner trench wall, said contact directly connecting said first electrode of said capacitor and one of said conducting regions of said transistor laterally through an opening formed in said first insulating layer on said inner trench wall surface;

said capacitor and said conducting region defining an imaginary line therebetween, a first direction being parallel to said line and a second direction being perpendicular to said first direction,

two successive cells being disposed in mirror symmetry with an axis of symmetry extending perpendicularly to said first direction centrally between two successive cells; and

each of said memory cells being offset by one-half said given cell width in said second direction.

5,701,023

INSULATED GATE SEMICONDUCTOR DEVICE TYPICALLY HAVING SUBSURFACE-PEAKED PORTION OF BODY REGION FOR IMPROVED RUGGEDNESS

Constantin Bulucea, Milpitas, and Richard A. Blanchard, Los Altos, both of Calif., assignors to National Semiconductor Corporation, Santa Clara, Calif.

Filed Aug. 3, 1994, Ser. No. 285,581

Int. Cl.⁶ H01L *29/74;29/76*

U.S. Cl. 257—341 **52 Claims**

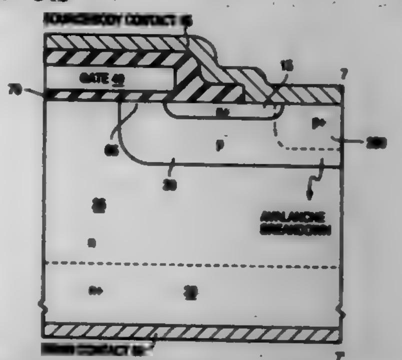

1. An insulated gate field effect semiconductor device comprising:

a semiconductor chip having an upper surface;

a drain region of a first conductivity type situated in the chip and extending to its upper surface;

a plurality of cells, each comprising:

a body region of a second conductivity type opposite to the first conductivity type situated in the drain region and extending to the upper surface of the chip; and

a source region of the first conductivity type situated in the body region, spaced apart from the drain region, and extending to the upper surface of the chip, a channel region of the body region extending between the source and drain regions, a subsurface-peaked portion of the body region (a) being spaced apart from the channel region, (b) reaching a peak net dopant concentration below the upper surface of the chip at a peak net dopant concentration value greater than that of material of the body region forming and underlying the channel region, (c) extending no more than an electrically insignificant amount below the source region, and (d) not extending significantly deeper below the upper surface of the chip than material of the body region underlying the source region; and

an insulated gate structure situated along the channel regions outside the chip.

5,701,024

ELECTROSTATIC DISCHARGE (ESD) PROTECTION STRUCTURE FOR HIGH VOLTAGE PINS

Jeffrey Watt, Mountain View, Calif., assignor to Cypress Semiconductor Corp., San Jose, Calif.

Filed Oct. 5, 1995, Ser. No. 539,645

Int. Cl.⁶ H01L *23/62*

U.S. Cl. 257—360 **18 Claims**

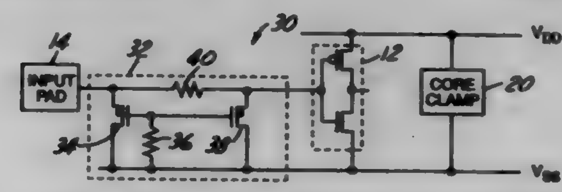

1. An interface structure connected to a pad of a semiconductor device for improved electrostatic discharge (ESD) immunity, comprising:

an output driver coupled to said pad and including an n-channel field effect transistor (FET) having a source region and drain region of n^+-type conductivity, said source and drain regions being spaced to define a channel region therebetween said drain region being directly connected to said pad by a plurality of contact regions;

a depletion implant of n-type conductivity overlapping said drain region and extending in said channel region towards said source region; and

an n-well underlying said drain region to thereby reduce contact spiking during ESD events on said pad.

5,701,025

SEMICONDUCTOR INTEGRATED CIRCUIT DEVICE AND FABRICATION METHOD THEREFOR

Masanori Yoshimori, Tokyo, Japan, assignor to NEC Corporation, Tokyo, Japan

Continuation of Ser. No. 426,137, Apr. 21, 1995, abandoned. This application Apr. 28, 1997, Ser. No. 837,951

Claims priority, application Japan, Apr. 21, 1994, 6-082909

Int. Cl.⁶ H01L *29/76;29/94;31/062;31/113*

U.S. Cl. 257—379 **8 Claims**

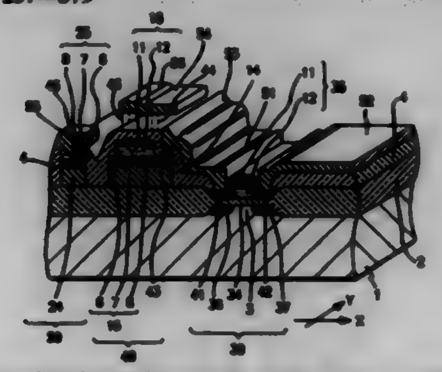

1. A semiconductor integrated circuit device comprising an insulating layer covering a semiconductor substrate, a resistor layer comprising a first polysilicon layer formed on said insulating layer, a protection insulation film formed on said resistor layer, a capacitor comprising a lower electrode constituted by a second polysilicon layer and formed on said insulating layer, a dielectric film formed on said lower electrode and an upper electrode constituted by a third polysilicon layer formed on said dielectric film, and a transistor portion comprising a gate electrode constituted by a fourth polysilicon layer overlying said semiconductor substrate, wherein said first and second polysilicon layers are simultaneously formed and have equal sheet resistance, and wherein said third and fourth polysilicon layers are simultaneously formed and have equal sheet resistance.

5,701,026

LATERAL TRENCH MISFET

Naoto Fujishima, and Akio Kitamura, both of Nagano, Japan, assignors to Fuji Electric Co., Ltd., Japan

Filed Oct. 25, 1995, Ser. No. 547,910

Claims priority, application Japan, Oct. 25, 1994, 6-258617; Aug. 23, 1995, 7-214317

Int. Cl.⁶ H01L *29/00;29/76;29/94*

U.S. Cl. 257—510 **21 Claims**

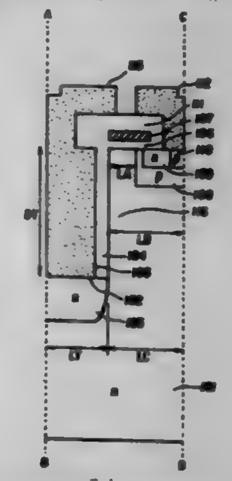

1. A lateral trench MISFET comprising:

a semiconductor layer of a first conductivity type;

a trench formed in a surface layer of said semiconductor layer;

a drain region of the first conductivity type formed at a bottom of said trench;

a side wall insulation film formed on a side face of said trench;

a base region of a second conductivity type formed in a portion of said semiconductor layer separate from the trench;

a source region of the first conductivity type formed in a part of a surface layer of said base region, such that said base region forms an extension portion that extends between said semiconductor layer and said source region;

a gate electrode overlying said extension portion;

a gate insulation film provided between the gate electrode and said extension portion;

a source electrode connected to both said source region and said base region; and

a conductive material disposed in said trench.

5,701,027

PROGRAMMABLE INTERCONNECT STRUCTURES AND PROGRAMMABLE INTEGRATED CIRCUITS

Kathryn E. Gordon, Mountain View, and Richard J. Wong, Milpitas, both of Calif., assignors to QuickLogic Corporation, Sunnyvale, Calif.

Continuation of Ser. No. 892,466, Jun. 1, 1992, Pat. No. 5,557,136, which is a continuation-in-part of Ser. No. 874,983, Apr. 23, 1992, Pat. No. 5,196,724, which is a continuation of Ser. No. 691,950, Apr. 26, 1991, abandoned, said Ser. No. 892,466is a continuation-in-part of Ser. No. 891,675, May 28, 1992, abandoned, which is a continuation of Ser. No. 698,648, May 10, 1991, abandoned. This application May 21, 1996, Ser. No. 651,102

Int. Cl.[6] H01L *29/00*

U.S. Cl. 257—530 **9 Claims**

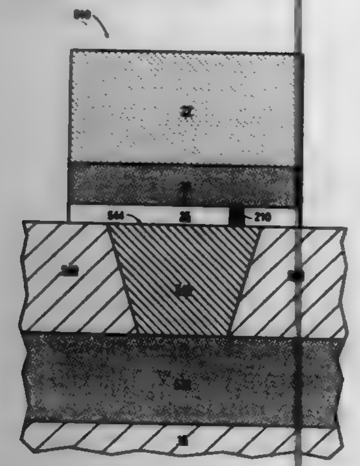

1. An integrated structure comprising an antifuse comprising:
a first conductor;
an insulating layer overlaying said first conductor and having a first opening therethrough;
a conductive plug filling the first opening and contacting the first conductor, a top surface of the insulating layer having a portion adjacent to the plug, the portion being substantially coplanar with a top surface of the plug;
a layer of programmable material having a substantially planar bottom surface overlaying and contacting the plug, wherein the programmable material is non-conductive over the plug when the antifuse is unprogrammed, and wherein the programmable material provides therethrough a conductive path contacting the plug when the antifuse is programmed; and
a second conductor overlaying and contacting the programmable material.

5,701,028

SEMICONDUCTOR DEVICE HAVING TAB LEADS

Masaki Waki, Kawasaki, Japan, assignor to Fujitsu Limited, Kawasaki, Japan

Continuation of Ser. No. 413,906, Mar. 30, 1995, abandoned. This application Sep. 3, 1996, Ser. No. 724,051

Claims priority, application Japan, Jul. 18, 1994, 6-165077

Int. Cl.[6] H01L *23/495*

U.S. Cl. 257—666 **17 Claims**

10. A TAB tape having a TAB lead for electrically connecting an internal terminal of a semiconductor chip to an external terminal disposed outside of the semiconductor chip, comprising;
an insulating film having a device hole in a center part and slits around the device hole for the semiconductor chip, the insulating film having a first surface for adhering to a surface of the semiconductor chip, and a second surface opposite to the first surface to which the TAB lead adheres;
a conducting film being patterned for the TAB lead on the insulating film, the TAB lead having three continuous parts of an inner lead, an outer lead, and a test pad, wherein the inner lead is inwardly extended over the device hole, the outer lead

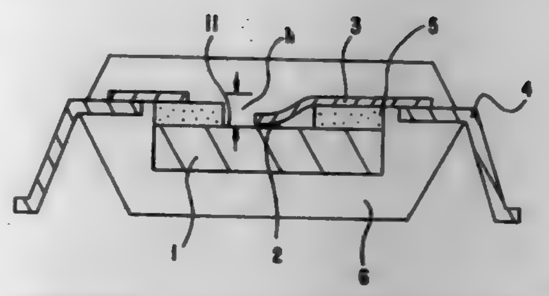

is outwardly across one of the slits, and the test pad is placed further outwardly beyond the slits to terminate the outer lead.

5,701,029

SEMICONDUCTOR HAVING POLYCRYSTALLINE SILICON SANDWICHED BY SEMICONDUCTOR SUBSTRATE AND METAL SILICIDE

Masakazu Sasaki, Tokyo, Japan, assignor to NEC Corporation, Tokyo, Japan

Filed Sep. 28, 1995, Ser. No. 535,400

Claims priority, application Japan, Sep. 28, 1994, 6-258858

Int. Cl.[6] H01L *29/43;29/45*

U.S. Cl. 257—377 **10 Claims**

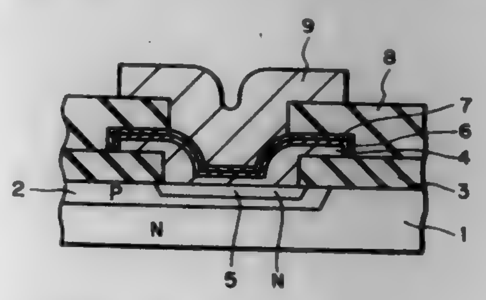

6. A semiconductor device comprising:
a semiconductor substrate;
an impurity doped region formed in said semiconductor substrate;
an insulating layer formed on said semiconductor substrate, said insulating layer having an opening leading to said impurity doped region;
a polycrystalline silicon layer formed on said insulating layer and said impurity doped region, said polycrystalline silicon layer having a larger crystal grain size at a sidewall of said insulating layer than at a bottom of said opening and at a surface of said insulating layer; and
a metal silicide layer formed on said polycrystalline silicon layer.

5,701,030

Patent Not Issued For This Number

5,701,031

SEALED STACKED ARRANGEMENT OF SEMICONDUCTOR DEVICES

Satoshi Oguchi, Ohme; Masamichi Ishihara; Kazuya Ito, both of Hamura-machi; Gen Murakami, Tama; Ichiro Anjoh, Koganei; Toshiyuki Sakuta; Yasunori Yamaguchi, both of Ohme; Yasuhiro Kasama, Tokyo; Tetsu Udagawa, Iruma; Eiji Miyamoto, Tokyo; Youichi Matsuno, Koganei; Hiroshi Satoh, Kodaira, and Atsusi Nezoe, Ohme, all of Japan, assignors to Hitachi, Ltd., Tokyo, Japan

Division of Ser. No. 691,985, Apr. 26, 1991, Pat. No. 5,332,922. This application Jul. 25, 1994, Ser. No. 280,381

Claims priority, application Japan, Apr. 26, 1990, 2-108621; Mar. 31, 1991, 3-74530

Int. Cl.[6] H01L *23/28;23/535;23/538;25/065*

U.S. Cl. 257—686 **16 Claims**

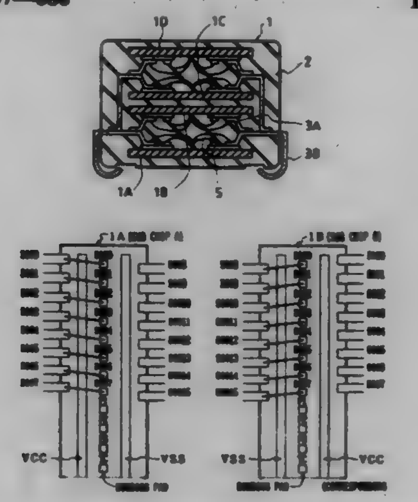

1. A stacked arrangement of semiconductor devices, comprising:
a first semiconductor device, including
(i) a first semiconductor substrate having a first main surface and a second main surface, opposing said first surface;
(ii) a first row of bonding pads provided in a central portion of said first main surface of said first semiconductor substrate, said first row of bonding pads consisting of at least a first and a second bonding pad; and
(iii) a first lead electrically connected to said first bonding pad and arranged over said first main surface at one side of said first row of bonding pads, and a second lead electrically connected to said second bonding pad and arranged over said first main surface at the other side of said first row of bonding pads, and
a second semiconductor device, including
(i) a second semiconductor substrate having a first main surface and a second main surface, opposing said first surface;
(ii) a second row of bonding pads having a same bonding pad arrangement as that of said first row of bonding pads and provided in a central portion of said first main surface of said second semiconductor substrate, said second row of bonding pads consisting of at least a third and a fourth bonding pad; and
(iii) a third lead electrically connected to said fourth bonding pad and arranged over said first main surface at one side of said second row of bonding pads, and a fourth lead electrically connected to said third bonding pad and arranged over said first main surface at the other side of said second row of bonding pads,
wherein said first and second semiconductor devices are stacked in a manner such that the second surfaces of said first and second semiconductor substrates are positioned to be facing toward each other, and
wherein said first lead is electrically connected to said fourth lead, and said second lead is electrically connected to said third lead.

5,701,032

INTEGRATED CIRCUIT PACKAGE

Paul James Fischer, and William George Petefish, both of Eau Claire, Wis., assignors to W. L. Gore & Associates, Inc., Newark, Del.

Continuation of Ser. No. 323,985, Oct. 17, 1994, Pat. No. 5,525,834. This application Nov. 2, 1995, Ser. No. 552,359

Int. Cl.[6] H01L *23/48*

U.S. Cl. 257—692 **3 Claims**

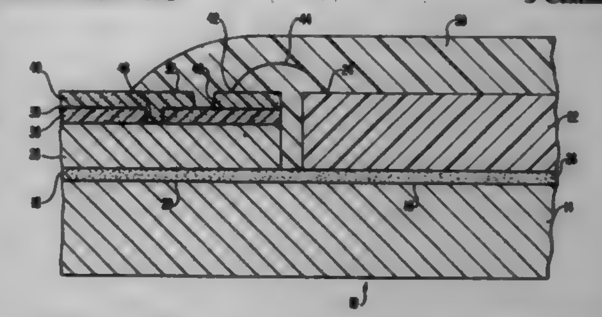

1. An integrated circuit package for housing an integrated circuit chip and for providing electrical connectivity of data signals and voltage signals between the integrated circuit chip and an electronic component, the package comprising:
a carrier substrate having a first surface including a die attach region and a signal layer region;
an integrated circuit chip affixed to the die attach region, the integrated circuit chip including a plurality of bonding pads;
at least three conductive layers on the signal layer region of the substrate for conducting electrical signals, the conductive layers comprising a single signal layer, at least a first voltage layer for providing a first reference voltage signal to the integrated circuit chip and a second voltage layer for providing a second reference voltage signal to the integrated circuit chip, the first voltage layer comprising a reference ground layer adjacent to the substrate for providing a ground signal to the integrated circuit chip and the second voltage layer comprising a reference voltage layer closely coupled to the reference ground layer thereby providing a decoupling capacitance of at least 0.05 nF/cm^2 therebetween;
a plurality of bond wires having a predetermined length, each bond wire electrically connecting a single bonding pad of the integrated circuit chip to a single bonding pad of the signal layer, each bond wire being disposed substantially parallel one to each other to route all of the data signals on the single signal layer to minimize the length of the bond wires, the bond wire inductance being in a range from about less than 1 nH to about greater than 0.25 nH;
at least first and second dielectric layers, the at least first dielectric layer being disposed between the first and second voltage layers, and the at least second dielectric layer being disposed between the second voltage layer and the signal layer; and
a plurality of electrical connections for interconnecting the chip bonding pads with the electronic component by way of at least one of the conductive layers for conducting electrical signals therebetween.

5,701,033

SEMICONDUCTOR DEVICE

Tetsuya Ueda; Jun Shibata, and Yoshiyuki Yama, all of Tokyo, Japan, assignors to Mitsubishi Denki Kabushiki Kaisha, Tokyo, Japan

Filed Jan. 30, 1996, Ser. No. 593,965

Claims priority, application Japan, Mar. 20, 1995, 7-060434

Int. Cl.[6] H01L *23/12;23/28;23/34;23/02*

U.S. Cl. 257—704 **14 Claims**

1. A semiconductor device comprising:
a substrate having opposed first and second surfaces and a cavity transverse to the first and second surfaces for receiving a semiconductor element, the cavity having a rectangular open-

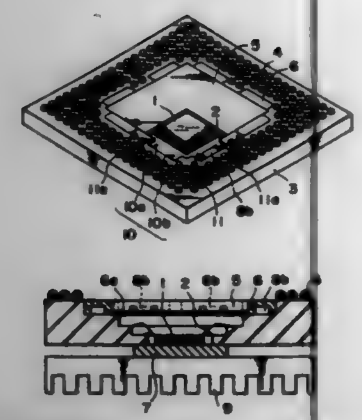

ing at the first surface, and an internal stepped surface defining the cavity and including multiple steps having surfaces parallel to and transverse to the first and second surfaces;
a semiconductor element mounted within the cavity;
a passive electrical chip component mounted on one of the stepped surfaces parallel to the first and second surfaces;
electrical connecting means disposed in the substrate for electrically connecting the semiconductor element and the passive electrical chip component to an external circuit; and
sealing means including a cap attached to the substrate in the rectangular opening, enclosing the semiconductor element within the cavity and the passive electrical chip component within the semiconductor device, the cap including notches at corners of the opening where the cap is not in contact with the substrate, and a resin filling the notches and contacting the substrate and the cap.

5,701,034
PACKAGED SEMICONDUCTOR DIE INCLUDING HEAT SINK WITH LOCKING FEATURE
Robert C. Marrs, Scottsdale, Ariz., assignor to Amkor Electronics, Inc., Chandler, Ariz.
Filed May 3, 1994, Ser. No. 237,709
Int. Cl.[6] **H01L** *23/10;23/34*
U.S. Cl. 257—706 **13 Claims**

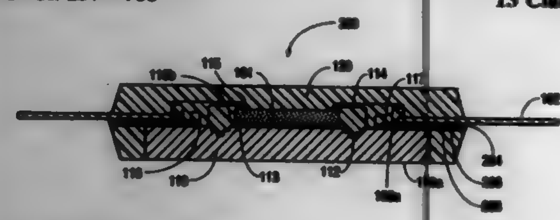

1. Structure comprising:
a semiconductor die, the die having a first surface on which electrically conductive traces and a plurality of electrically conductive bond pads are formed, and a second surface, the second surface being opposite the first surface;
a plurality of electrically conductive package leads, a lead tip of each of the package leads in proximity to the die;
a plurality of electrically conductive bond wires, each bond wire connecting the lead tip of one of the package leads to a bond pad on the die;
a heat sink, a first surface of the heat sink attached to the second surface of the die and to an inner portion of the leads, wherein a locking moat is formed in a locking surface of the heat sink between the die and the lead tips of the package leads, the locking moat having a cross-sectional shape, in a plane perpendicular to the locking surface, that has, at a first distance from the locking surface, a width that is larger than a width at a second distance from the locking surface, the second distance being smaller than the first distance;
encapsulant encapsulating the die, the bond wires, the heat sink and the inner portion of the package leads such that the encapsulant interlocks with the locking moat to prevent the encapsulant from separating from the heat sink;
a second plurality of electrically conductive bond wires, each bond wire of the second plurality connecting the lead tip of one of the package leads to a bonding location on the heat sink; and
a third plurality of electrically conductive bond wires, each bond wire of the third plurality connecting a bonding location on the heat sink to a bond pad on the die.

5,701,035
ELECTRODE STRUCTURE AND METHOD FOR FABRICATING THE SAME
Nobuaki Teraguchi, Nara-ken, Japan, assignor to Sharp Kabushiki Kaisha, Osaka, Japan
Filed Jul. 19, 1995, Ser. No. 504,101
Claims priority, application Japan, Jul. 19, 1994, 6-167124
Int. Cl.[6] **H01L** *23/48;23/52;29/40*
U.S. Cl. 257—747 **3 Claims**

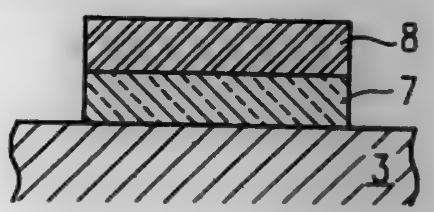

1. An electrode structure comprising a p-type $Al_xGa_yIn_{1-x-y}N$ ($0 \leq x \leq 1$, $0 \leq y \leq 1$, $x+y \leq 1$) semiconductor layer and an electrode layer formed on the semiconductor layer,
wherein the electrode layer contains a mixture of a metal nitride containing a first metal and a metal hydride containing a second metal, wherein the first metal and the second metal are different.

5,701,036
INTEGRATED CIRCUITRY WITH INTERCONNECTION PILLAR
Sanh Tang, Boise, Id., assignor to Micron Technology, Inc., Boise, Id.
Continuation of Ser. No. 447,218, May 22, 1995, abandoned, which is a division of Ser. No. 298,209, Aug. 29, 1994, Pat. No. 5,506,172. This application Jun. 27, 1996, Ser. No. 672,305
Int. Cl.[6] **H01L** *23/48;23/52;29/76;29/94*
U.S. Cl. 257—750 **5 Claims**

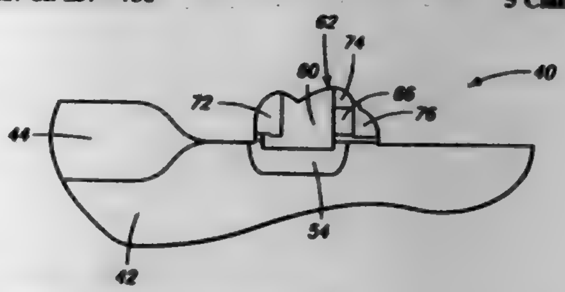

1. An integrated circuit comprising:
a semiconductor substrate;
a base region within the semiconductor substrate to which electrical interconnection is made;
a first insulative layer over the base region;
an electrically conductive pillar extending through the first insulative layer and into the base region; the pillar having a portion extending elevationally above the first insulative layer and an elevationally uppermost surface at a top of the portion extending elevationally above the first layer; the portion extending elevationally above the first insulative layer comprising, in cross-section, a pair of laterally opposing sidewalls; the pair of laterally opposing sidewalls being a first sidewall and a second sidewall;
an electrically conductive line extending from the first sidewall; the line having a joining elevationally uppermost surface where it joins with the first sidewall; the pillar elevationally uppermost surface being elevationally above the line joining uppermost surface; the pillar elevationally uppermost surface not extending laterally to over the electrically conductive line; the pillar constituting a uniform composition of material at least from a location elevationally below the line through a location elevationally above the line joining uppermost surface;
a first insulative spacer along an entirety of the second sidewall; and
a second insulative spacer along the first sidewall and over the conductive line joining elevationally uppermost surface.

5,701,037
ARRANGEMENT FOR INDUCTIVE SIGNAL TRANSMISSION BETWEEN THE CHIP LAYERS OF A VERTICALLY INTEGRATED CIRCUIT
Werner Weber; Stefan Kuehn; Michael Kleiner, all of Munich, and Roland Thewes, Puchheim, all of Germany, assignors to Siemens Aktiengesellschaft, Munich, Germany
Filed Oct. 27, 1995, Ser. No. 549,068
Claims priority, application Germany, Nov. 15, 1994, 44 40 864.1
Int. Cl.[6] **H01L** *23/48;23/52;29/40*
U.S. Cl. 257—777 **9 Claims**

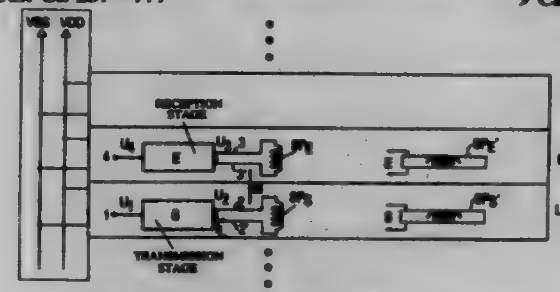

1. A vertically integrated circuit comprising:
a first integrated chip layer containing a first circuit portion;
a second integrated chip layer disposed in a stack on said first integrated chip layer and containing a second circuit portion, said first and second circuit portions comprising portions of a single integrated circuit; and
coupling inductive means disposed in said stack for inductively transmitting a signal in said single integrated circuit between said first and second circuit portions.

5,701,038
CURRENT FEEDBACK CONTROL OF AC DEPLOYMENT CURRENT FOR SUPPLEMENTAL INFLATABLE RESTRAINTS
Kevin Dale Kincaid, Kokomo, Ind., assignor to Delco Electronics Corp., Kokomo, Ind.
Filed Jul. 26, 1996, Ser. No. 686,890
Int. Cl.[6] **B60R** *21/32*
U.S. Cl. 307—10.1 **10 Claims**

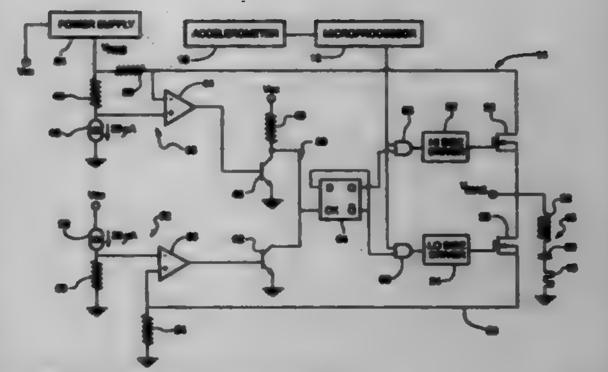

1. A method of operating a supplemental inflatable restraint system having a firing circuit including an initiator and a deployment circuit coupled to the firing circuit for firing the initiator, comprising the steps of:
supplying a series of current pulses of alternating polarity to the firing circuit, the current of each such pulse having a magnitude which first increases and then decreases;
sensing the current in each pulse; and
terminating a present pulse associated with the sensed current and starting a next successive pulse of said series when such sensed current decreases below a threshold, so as to automatically adjust the frequency of said alternating polarity current pulses in an amount required to maintain the RMS value of the firing circuit current at a predefined value over a range of firing circuit inductance.

5,701,039
ELECTROMECHANICAL TRANSDUCING
James A. Parison, Fitzwilliam, N.H.; Thomas A. Froeschle, Southborough, and Robert L. Maresca, Hopkinton, both of Mass., assignors to Bose Corporation, Framingham, Mass.
Filed Jul. 20, 1995, Ser. No. 504,434
Int. Cl.[6] **H02K** *41/00*
U.S. Cl. 310—12 **6 Claims**

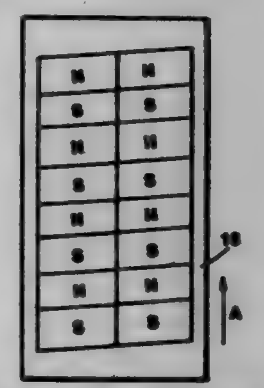

1. An electromechanical transducer comprising:
a first member and a second member being relatively slidable along a path having spaced end points,
said first member and said second member being electromagnetically coupled;
wherein said first member includes a plurality of substantially contiguous windings for producing a plurality of magnetic fields having a significant component orthogonal to said path; and
wherein said second member has a plurality of substantially contiguous permanent magnets of alternate plurality along said path for establishing a magnetic field which reacts with the magnetic fields produced by the first member to produce force along said path including detent force with harmonic content and useful working force,
wherein transition lines dividing adjacent ones of said permanent magnets along said path are not perpendicular to said path and at such an angle to significantly reduce said harmonic content without significant reduction in said useful working force.

5,701,040
MAGNET ARRANGEMENT, AND DRIVE DEVICE AND COOLING APPARATUS INCORPORATING SAME
Anna Helena Orlewska, Oxford; Thomas William Bradshaw, East Hanney, and David Elwyn Baynham, Didcot, all of England, assignors to British Technology Group Limited, London, England
PCT No. PCT/GB93/02245, § 371 Date Apr. 12, 1995, § 102(e) Date Apr. 12, 1995, PCT Pub. No. WO94/10741, PCT Pub. Date May 11, 1994
PCT Filed Nov. 1, 1993, Ser. No. 416,895
Claims priority, application United Kingdom, Nov. 3, 1992, 9222971
Int. Cl.^{6} H02K *33/18*
U.S. Cl. 310—13 8 Claims

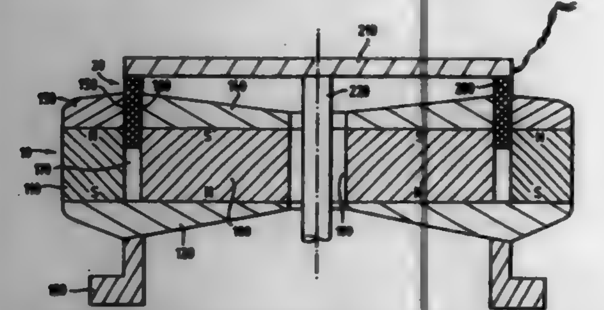

1. A magnet arrangement comprising an annular coil and a first generally circularly symmetric cylindrical permanent magnet device and a second generally circularly symmetric cylindrical permanent magnet device, each having opposite magnetic poles at opposite ends of the cylinder, the first device being nested inside the second device in a substantially coaxial relationship; and a first connecting means magnetically connecting the two devices together at one pair of magnetic poles such that a magnetic circuit is formed, and a second annular connecting means and a third connecting means magnetically connected with the other magnetic poles of the second and first devices, respectively, so as to define a magnet pole gap said gap being located in the circuit between poles of the second and third connecting means, the magnet pole gap being adapted to receive the coil which is movable, upon being electrically powered, in an axial direction so as to define a stroke, wherein the magnetic field is homogeneous throughout substantially the entire length of the magnet pole gap in an axial direction, thereby ensuring that at any position during the stroke of the coil, the coil experiences a substantially constant magnetic field, wherein the first device is hollow, the first connecting means is in the form of an annulus having a periphery from which a first surface tapers towards the axis of symmetry of the arrangement and a second surface tapers away from the axis of symmetry of the arrangement, the second connecting means tapers away from the axis of symmetry of the arrangement and the third connecting means is annular and tapers towards the axis of symmetry.

5,701,041
WEIGHT SUPPORTING APPARATUS
Kotaro Akutsu, Soka; Eiji Osanai, and Shigeto Kamata, both of Yokohama, all of Japan, assignors to Canon Kabushiki Kaisha, Tokyo, Japan
Filed Oct. 3, 1994, Ser. No. 316,887
Claims priority, application Japan, Oct. 12, 1993, 5-277325
Int. Cl.^{6} H02K *33/18*; B23Q *1/38*
U.S. Cl. 310—12 20 Claims

1. A weight supporting apparatus, comprising:
- a base;
- a plurality of sets of driving means for moving a driven body above the base in the direction of gravity; and
- a plurality of sets of supporting means for supporting the weight of the driven body at a position after being driven, each set of said plurality of sets of driving means and supporting means being so arranged that the drive force of said driving means and the support force of said supporting means are on the

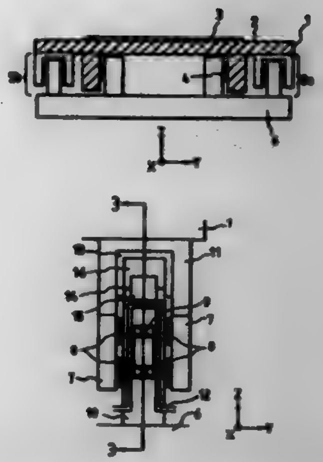

same axis, wherein the driven body is moved in the direction of gravity or inclined relative to said base, wherein the driven body has a limited degree of freedom substantially in a horizontal direction with respect to said base and is held by a hydrostatic fluid bearing so as to be movable in said limited degree of freedom.

5,701,042
LINEAR DIRECT CURRENT MOTOR
Seiji Takei, Kanagawa, Japan, assignor to Nippon Thompson Co., Ltd., Tokyo, Japan
Filed Nov. 6, 1995, Ser. No. 553,903
Claims priority, application Japan, Nov. 7, 1994, 6-297853
Int. Cl.^{6} H02K *41/00*
U.S. Cl. 310—12 7 Claims

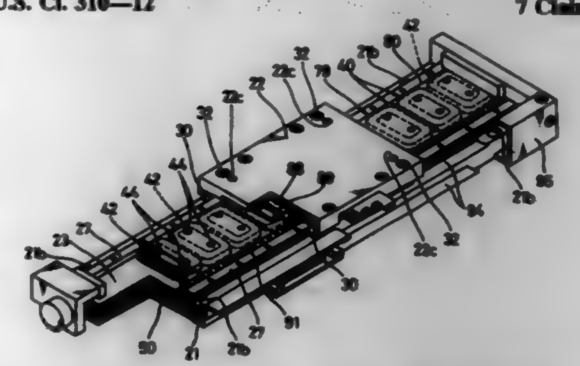

1. A linear direct current motor equipped with: a field magnet in which P number of poles (P being an integer of at least 2) are arranged and magnetized so that they are sequentially different; a group of armature coils wound so that the open angle width of the conductors contributing to thrust is roughly 2n−1 times (where n is an integer of at least 1) the magnetic pole width of said field magnet, which relatively drive said field magnet by being arranged so as to oppose said field magnet and supplying excitation current by an excitation current supply circuit; and, magnetic pole discrimination elements, provided corresponding to each said armature coil, which perform discrimination of the magnetic poles of said field magnet; wherein, the endmost magnetic poles of said field magnet are non-detected magnetic poles with respect to said magnetic pole discrimination elements, and said excitation current supply circuit is composed so that current output to the armature coils has constant current properties.

5,701,043
HIGH RESOLUTION ACTUATOR
Mahmoud Razzaghi, 3740 Boyd Ave. #153, San Diego, Calif. 92111
Filed Sep. 9, 1996, Ser. No. 711,176
Int. Cl.^{6} H01L *41/12*
U.S. Cl. 310—26 13 Claims

1. An actuator that provides small displacements for applications

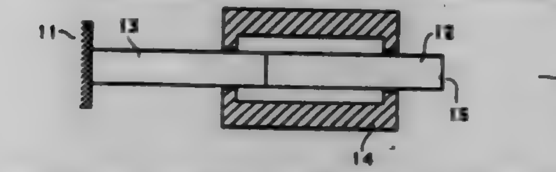

such as micro positioning, motion control, or measurement, by reducing a relatively larger displacement of a magnetic field inside a magnetostrictive material, said actuator including:
- a first longitude of magnetostrictive material;
- a second longitude of nonmagnetic or soft magnetic material, attached rigidly end to end to the first longitude to provide a combined longitude;
- a magnet, such as a permanent magnet or an electromagnet, providing an essentially constant magnetomotive force, to move along and provide a magnetic field inside and along a portion of the combined longitude;
- the magnetic circuit between the magnet and the combined longitude is essentially closed, having only minor clearance of air gap or nonmagnetic lining to allow displacement of the magnet relative to the combined longitude and free expansion or contraction of the magnetostrictive material,
- when the magnet is displaced along the combined longitude, the length of the magnetic field inside the magnetostrictive material changes, while the magnetic circuit remains essentially closed, and the change in the length of the magnetic field inside the magnetostrictive material is accompanied by an equal and opposite change in the second longitude,
- the change in the length or a combined change in the length and intensity of the magnetic field inside the magnetostrictive material causes a change in the expansion or contraction of the magnetostrictive material, and consequently, changes the displacement of one end of the magnetostrictive material relative to the other,
- the displacement from the magnetostrictive material is a fraction of the displacement of the magnet, the fraction being the mount of swain due to the magnetic field in the magnetostrictive material.

5,701,044
PROCESS AND DEVICE FOR MONITORING THE TEMPERATURE OF AN ELECTRIC GENERATOR
Horst-Werner Emshoff; Lutz Intichar, both of Mülheim an der Ruhr, and Hermann Scheil, Hemhofen, all of Germany, assignors to Siemens Aktiengesellschaft, Munich, Germany
Filed Feb. 9, 1996, Ser. No. 599,385
Claims priority, application Germany, Aug. 9, 1993, 43 26 680.0
Int. Cl.^{6} H02K *11/00*
U.S. Cl. 310—54 10 Claims

1. A process for monitoring the temperature of an electric generator, which comprises:
- detecting temperatures of a plurality of winding bars of a stator winding of a generator being cooled by a coolant;

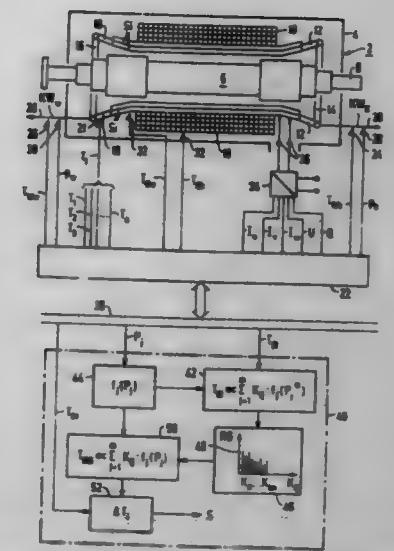

- ascertaining a temperature deviation for each winding bar by comparing a measured actual value of the temperature of the winding bar with a reference temperature value for the winding bar;
- determining characteristic variables for the winding bar from a reference measurement;
- forming the reference value from currently detected operation-relevant parameters of the generator and from the characteristic variables;
- ascertaining the characteristic variables for each winding bar from a temperature of the winding bar detected in the reference measurement and from a number of functions identical to a number of characteristic variables, the functions being dependent on the operation-relevant parameters and operation-relevant parameters detected at different operating states of the generator being evaluated therefor in the reference measurement; and
- both the currently detected operation-relevant parameters and the operation-relevant parameters detected in the reference measurement each including a stator current of the generator as well as at least one of the following parameters: a terminal voltage of the generator, a reactive output, a temperature of the coolant before and after passage through the winding bars, and a temperature of a generator coolant contained in the generator.

7. A device for monitoring the temperature of an electric generator having a stator winding being cooled with a coolant and having a plurality of winding bars, comprising:
- a first component for detecting and processing a measured temperature value for each of a plurality of winding bars of an electric generator;
- a data bus; and
- a second component being connected through said data bus to said first component for ascertaining a temperature deviation of a measured bar-specific actual temperature value from a bar-specific reference temperature value for each winding bar, said second component having a first computer unit for calculating characteristic variables formed from a reference measurement, and a second computer unit for calculating the bar-specific reference values from the characteristic variables and from currently detected operation-relevant parameters;
- said first component detecting a stator current and at least one of the following parameters as current operation-relevant parameters: a terminal voltage of the generator, a reactive output, a temperature of the coolant before and after passage through the winding bars, and a temperature of a generator coolant contained in the generator.

5,701,045

AXIAL FLOW AIR FAN HAVING LATERAL SUCTION AND DISCHARGE PORTS FOR COOLING ELECTRONIC COMPONENTS

Shinjiro Yokozawa, Tokyo; Nobumasa Kodama, Ueda, and Toshiki Ogawara, Toubumachi, all of Japan, assignors to Sanyo Denki Co., Ltd., Tokyo, Japan

Filed May 29, 1996, Ser. No. 672,376

Claims priority, application Japan, May 31, 1995, 7-134394

Int. Cl.[6] H02K *9/00;9/06*

U.S. Cl. 310—62 13 Claims

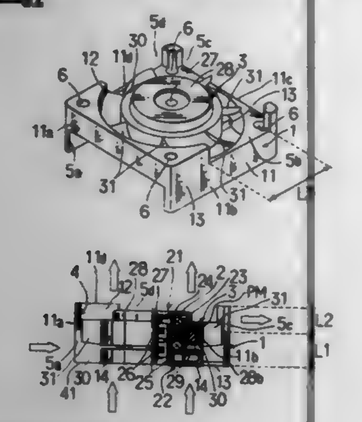

1. An air fan comprising:
a motor including a rotor and a stator;
an impeller securely mounted on said rotor and including a plurality of blades for sucking air from one side in an axial direction of a revolving shaft of said motor and guiding sucked air mainly toward the other side in said axial direction; and
a casing including a peripheral wall arranged so as to define a cavity therein in which said motor and impeller are received;
said cavity being formed so as to be open on said both sides in said axial direction;
said peripheral wall of said casing being provided at one end thereof on said one side with at least one lateral suction port which permits air to be sucked therethrough into said cavity in a radial direction of said revolving shaft;
said peripheral wall of said casing being provided at the other end thereof on said the other side with at least one lateral discharge port which permits said air sucked into said cavity to be discharged therethrough in the radial direction of said revolving shaft;
said lateral suction port and lateral discharge port being arranged so as not to be aligned with each other in said axial direction.

5,701,046

PROCESS FOR THE PRODUCTION OF MULTI-LAYERED BRUSHES AND BRUSHES OBTAINED BY THE PROCESS

Eric Kammerer, Amiens, France; Lothar Biering, Frankfurt am Main, Germany; Erhard Grohs, Oberursel, Germany; Klaus Groht, Niddatal, Germany; Conrad Reynvaan, Bad Homburg, Germany; Horst Siegmund, Arnoldshain, Germany; Jorgen Spangenberg, Bad Vilbel, Germany, and Arwed Uecker, Farmville, Va., assignors to Le Carbone Lorraine, Courbevoie, France

Filed Aug. 16, 1994, Ser. No. 291,562

Claims priority, application France, Sep. 2, 1993, 93 10881

Int. Cl.[6] H01R *39/24;* H02K *13/00*

U.S. Cl. 310—251 20 Claims

1. A composite electrical contact brush comprising a first integral block of a first electrically conductive compressed powder and a second integral block of a second electrically conductive compressed powder in contact therewith along opposite block faces comprising a junction therebetween, said junction comprising a zone in which said first and second powders are mixed and including an interface L_j at which said first and second powders are

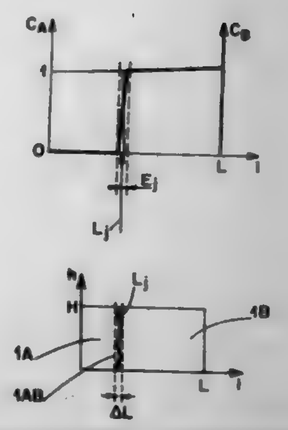

of equal volumetric concentration, said junction having a thickness E_j which is less than 0.2 L, where L is the length of the brush in a direction perpendicular to the junction.

5,701,047

ELECTRIC FAN MOTOR

Hugh Griffith Johnson, Auckland, New Zealand, assignor to Fisher & Paykel Limited, Auckland, New Zealand

PCT No. PCT/NZ93/00072, § 371 Date Apr. 20, 1995, § 102(e) Date Apr. 20, 1995, PCT Pub. No. WO94/05073, PCT Pub. Date Mar. 3, 1994

PCT Filed May 3, 1995, Ser. No. 387,882

Claims priority, application New Zealand, Aug. 21, 1992, 244046

Int. Cl.[6] H02K *1/12;1/00;15/00;* H01F *3/04*

U.S. Cl. 310—254 6 Claims

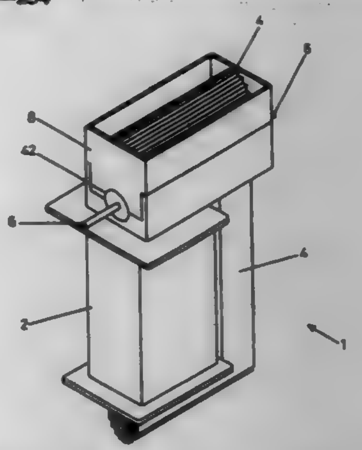

1. An electric motor comprising a permanent magnet rotor having an axis of rotation and an excited two part laminated stator made up of separate laminations of ferromagnetic material, the two parts of said stator adapted to be connected together about said rotor with said axis of said rotor in the plane of said laminations, said rotor having two axially separated pole regions and said stator being configured to provide a separate rotor receiving pole pair for each said rotor pole region, each stator pole pair providing a rotor receiving space within which respective rotor pole regions are disposed, wherein entire adjacent laminations in said stator are displaced relative to each other in the plane of the laminations in directions perpendicular to said rotor axis such that said stator poles are each formed by a pair of semi-circular shaped poles to provide said rotor receiving spaces.

5,701,048

CHIP-TYPE PIEZOELECTRIC RESONANCE COMPONENT

Hiroaki Kaida, Nagaokakyo, Japan, assignor to Murata Manufacturing Co., Ltd., Japan

Continuation of Ser. No. 248,343, May 24, 1994, abandoned. This application Jul. 24, 1995, Ser. No. 506,262

Claims priority, application Japan, May 31, 1993, 5-128770; Sep. 28, 1993, 5-241746; Oct. 21, 1993, 5-263769

Int. Cl.[6] H01L *41/08*

U.S. Cl. 310—321 22 Claims

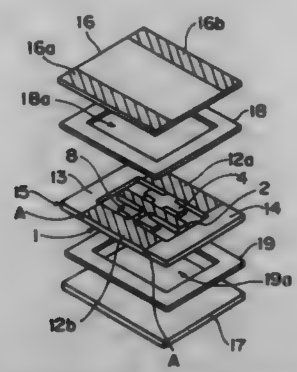

1. A chip-type piezoelectric resonance component comprising:
a piezoelectric resonator having a piezoelectric resonance unit, a holding part, and a dynamic damper coupled to said holding part and being arranged to vibrate by receiving vibration propagated from said piezoelectric resonance unit, said dynamic damper having a shape such that a natural vibration frequency of the dynamic damper is substantially identical to a resonance frequency of said piezoelectric resonance unit, said dynamic damper being arranged so as to vibrate in a bending mode, the dynamic damper being elongated in a length direction, the dynamic damper being disposed adjacent the resonance unit in a predetermined direction, the length direction being substantially perpendicular to the predetermined direction;
a spacer plate connected to said holding part of said piezoelectric resonator, and arranged to enclose a vibrating part of said piezoelectric resonator, the vibrating part comprising at least the resonance unit and said dynamic damper;
said piezoelectric resonator and spacer plate comprising an element plate:
first and second case members fixed so as to hold the element plate formed by said piezoelectric resonator and said spacer plate; and further wherein
spaces are defined between said first and second case members and said vibrating part of said piezoelectric resonator for allowing vibration of said vibrating part of said piezoelectric resonator;
said dynamic damper vibrating in a bending mode in said spaces, the dynamic damper acting as a trap to suppress oscillations propagated by said resonance unit to thereby trap the oscillations in the resonance unit.

5,701,049

PIEZOELECTRIC TRANSFORMER

Kouichi Kanayama, and Nobuhiro Maruko, both of Sodegaura, Japan, assignors to Mitsui Petrochemical Industries, Ltd., Tokyo, Japan

Filed Dec. 29, 1995, Ser. No. 581,425

Claims priority, application Japan, Dec. 30, 1994, 6-339708; May 18, 1995, 7-145577; Sep. 5, 1995, 7-254606; Oct. 11, 1995, 7-290440

Int. Cl.[6] H01L *41/08*

U.S. Cl. 310—359 21 Claims

1. A piezoelectric transformer comprising:

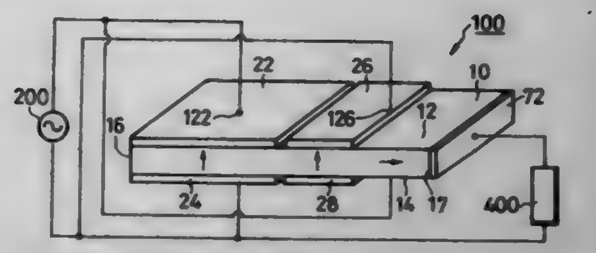

a substantially parallelepipedic piezoelectric substrate having a first main face, a second main face opposed to said first main face, a first end face and a second end face opposed to said first end face, a direction in which one side of said first main face and one side of said second main face extend being taken as a longitudinal direction of said piezoelectric substrate said first and second end faces intersecting to said longitudinal direction, a direction which intersects substantially perpendicularly to said first and second main faces being taken as a thicknesswise direction, said piezoelectric substrate being divided in the longitudinal direction into at least a first primary-side region, a second primary-side region, and a secondary-side region,
said first primary-side region including said first end face, said second primary-side region being located between said first primary-side region and said secondary-side region and being adjacent to said first primary-side region, said transformer being able to be driven at a predetermined resonance mode in the longitudinal direction, the length of said first primary-side region in the longitudinal direction being substantially one half of the resonance wavelength of said resonance mode in the longitudinal direction, and the length of said second primary-side region in the longitudinal direction being equal to or less than one half of said resonance wavelength;
a first primary-side electrode and a second primary-side electrode being disposed on said first and second main faces, respectively, of said first primary-side region and opposite to each other, said first primary-side region between said first and second primary-side electrodes being polarized in a predetermined direction along the thicknesswise direction;
a third primary-side electrode and a fourth primary-side electrode being disposed on said first and second main faces, respectively, of said second primary-side region and opposite to each other, said second primary-side region between said third and fourth primary-side electrodes being polarized in the predetermined direction along the thicknesswise direction; and
a secondary-side electrode being disposed in said secondary-side region, said secondary-side region being polarized in the longitudinal direction;
wherein the polarization direction of said first primary-side region between said first and second primary-side electrodes is the same as the polarization direction of the second primary-side region between said third and fourth primary-side electrodes when said third primary-side electrode and said second primary-side electrode are electrically connected and said fourth primary-side electrode and said first primary-side electrode are electrically connected, or
the polarization direction of said first primary-side region between said first and second primary-side electrodes is opposite to the polarization direction of the second primary-side region between said third and fourth primary-side electrodes when said third primary-side electrode and said first primary-side electrode are electrically connected and said fourth primary-side electrode and said second primary-side electrode are electrically connected.

5,701,050

IMMERSION LAMP FOR A PHOTOCHEMICAL REACTOR AND ITS USE

Christoph Wolf, Mainhausen, and Manfred Daus, Biebergemünd, both of Germany, assignors to Heraeus Noblelight GmbH, Hanau, Germany

PCT No. PCT/EP94/00241, § 371 Date Jun. 15, 1995, § 102(e) Date Jun. 15, 1995, PCT Pub. No. WO94/20418, PCT Pub. Date Sep. 15, 1994

PCT Filed Jan. 28, 1994, Ser. No. 481,432

Claims priority, application Germany, Mar. 12, 1993, 43 07 804.2

Int. Cl.[6] H01J *61/34;* **C02F** *1/32*

U.S. Cl. 313—25 **15 Claims**

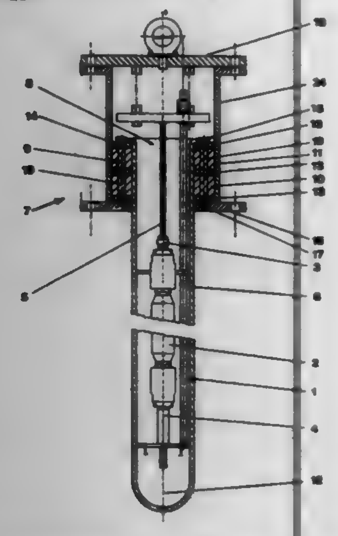

1. An immersion lamp for a photochemical reactor comprising:

a discharge lamp (2) connected to a connecting head (7) formed with a hollow chamber (9), the discharge lamp (2) being seated in an exterior bulb (1), an inert gas being disposed within the exterior bulb (1);

the discharge lamp (2) having axially oppositely located, mechanically stable electrical connectors 5, 6 held in and connected with a socket of the exterior bulb and extending into said hollow chamber (9), the exterior bulb (1) being tube-shaped and having at least one open end (8) which projects into the hollow chamber (9) of the connecting head (7),

wherein the at least one open end (8) of the exterior bulb (1) is surrounded by at least one resilient sealing member (10, 11) which, when viewed in the axial direction, is enclosed by two inelastic plates (13) placed thereupon in the form of a sandwich, the two inelastic plates (13) have openings which accommodate threaded bolts (19) having threaded ends which pass therethrough;

the connecting head (7) at a lower end thereof has a flange (16) with a passage for the at least one open end (8) of the exterior bulb (1), the flange (16) being provided with blind bore openings (17) with internal threads for receiving the threaded ends of the threaded bolts (19), the blind bare openings (17) being disposed on a side of the flange (16) facing away from the discharge lamp (2), wherein the at least one resilient sealing member (10, 11) is deformed by compression by the threaded bolts (19) in the radial direction such that the at least one the resilient sealing member (10, 11) rests sealingly against an exterior wall of the at least one open end (8) of the exterior bulb (1), as well as against an interior wall of the hollow chamber (9) to fix the exterior bulb (1) substantially in the center of the connecting head (7).

5,701,051

MINIATURE LAMP

Blake Lin, 24, Lane 77, Chung Shan Road, San Chung City Taipei Hsien, Taiwan

Filed Feb. 15, 1996, Ser. No. 602,037

Int. Cl.[6] H01R *33/00*

U.S. Cl. 313—318.1 **1 Claim**

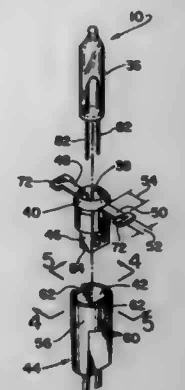

1. For use in a light display for a selected object an improved miniature lamp having an integral light bulb and base having an operative inserted position in a cooperating socket and held in place in said inserted position by at least one latching means hingedly connected in laterally extending relation from said base and folded in depending relation over said socket into engagement with a latch connection on said socket, said improvements for said miniature lamp comprising said at least one latching means being of a flat rectangular tongue of a prescribed width and length, wall means on said socket in the path of said folding movement of said tongue having vertically oriented spaced apart edges bounding a slot therebetween of a prescribed horizontal width and vertical length, said slot horizontal width being slightly oversized in relation to said width of said tongue and said slot vertical length being slightly undersized in relation to said tongue length, said wall means on opposite sides of said slot presenting a laterally extending tongue-engaging surface, and a triangular-shaped configuration on a free end of said tongue having opposite projections sized to extend laterally of said slot such that in said operative folded-over position of said tongue said projections contribute to a latched connection to said tongue-engaging surface, wherein said integral bulb and base is held in place in said socket and said latching tongue held in place in said slot.

5,701,052

DIRECTLY HEATED CATHODE STRUCTURE

Chang-seob Kim; Seok-bong Son, both of Suwon; Sang-kyun Kim, and Bong-uk Jeong, both of Seoul, all of Rep. of Korea, assignors to Samsung Display Devices Co., Ltd., Kyungki-do, Rep. of Korea

Filed Dec. 27, 1995, Ser. No. 579,519

Claims priority, application Rep. of Korea, Dec. 29, 1994, 94-38999

Int. Cl.[6] H01J *1/14;19/06;* **H01K** *1/04*

U.S. Cl. 313—346 R **23 Claims**

1. A directly heated cathode structure comprising:

a porous pellet impregnated with a thermionic cathode material and having opposed first and second surfaces;

a first metal member fixed to the first surface of said porous pellet;

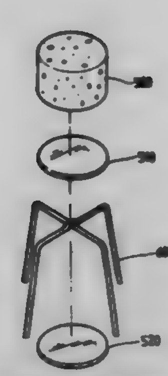

a second metal member welded to said first metal member; and

a filament interposed between said first and second metal members.

5,701,053

ELECTRON GUN FOR COLOR CATHODE RAY TUBE

Yong-seok Song, Suwon, Rep. of Korea, assignor to Samsung Display Devices Co., Ltd., Kyungki-do, Rep. of Korea

Filed Nov. 17, 1995, Ser. No. 560,290

Claims priority, application Rep. of Korea, Dec. 31, 1994, 94-40648

Int. Cl.[6] H01J *29/50*

U.S. Cl. 313—412 **11 Claims**

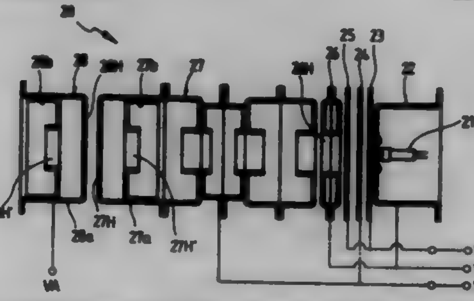

1. An electron gun for a cathode ray tube comprising:

a triode including a cathode, a controlling electrode and a screen electrode;

a pre-focusing electrode, first and second auxiliary electrodes and a main focusing electrode which constitute a unipotential electronic lens having a divergent lens and a focusing lens, for pre-focusing and accelerating electron beams emitted from said triode; and

a final accelerating electrode installed adjacent to said main focusing electrode, for constituting a main lens together with said main focusing electrode,

wherein a first static voltage is applied to said controlling electrode and the second auxiliary electrode, a second static voltage is applied to said screen electrode and the first auxiliary electrode, a focus voltage is applied to said pre-focusing electrode and the main focusing electrode, and a higher anode voltage is applied to said final accelerating electrode.

5,701,054

MIXED GREEN-EMITTING PHOSPHOR AND A CATHODE RAY TUBE ADOPTING THE SAME

Chang-won Park; Jun-mo Yang, both of Suwon, and Joon-bae Lee, Seoul, all of Rep. of Korea, assignors to Samsung Display Devices Co., Ltd., Kyungki-do, Rep. of Korea

Filed Apr. 6, 1995, Ser. No. 417,837

Claims priority, application Rep. of Korea, Oct. 12, 1994, 94-26118

Int. Cl.[6] H01J *29/20*

U.S. Cl. 313—467 **4 Claims**

1. A green-emitting phosphor comprising a mixture of $InBO_3$:Tb and a phosphor selected from the group consisting of ZnS:Cu,Au,Al and ZnS:Cu,Al, wherein the amount of said $InBO_3$:Tb is about 50–90 wt % of the total weight of said green-emitting phosphor.

5,701,055

ORGANIC ELECTOLUMINESCENT DISPLAY PANEL AND METHOD FOR MANUFACTURING THE SAME

Kenichi Nagayama, and Satoshi Miyaguchi, both of Tsurugashima, Japan, assignors to Pioneer Electronic Corporation, Tokyo, Japan

Filed Mar. 12, 1996, Ser. No. 614,316

Claims priority, application Japan, Mar. 13, 1995, 7-503011; Nov. 10, 1995, 7-293107

Int. Cl.[6] H01J *1/62;63/04*

U.S. Cl. 313—504 **10 Claims**

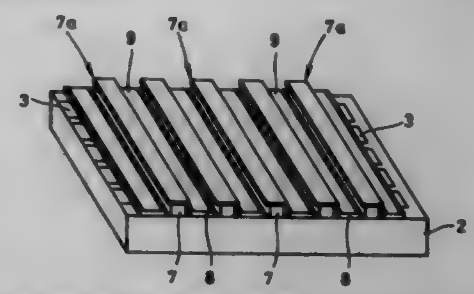

1. An organic electroluminescent display panel having a plurality of emitting portions comprising;

a substrate on which a plurality of first display electrodes corresponding to emitting portions are formed;

electrical insulation ramparts projecting from the substrate for exposing at least portions of the first display electrodes respectively;

organic function layers each including at least one organic electroluminescent medium formed on exposed portions of the first display electrodes;

second display electrodes formed on the organic function layers; and

each electrical insulation rampart having an overhanging portion projecting in a direction parallel to the substrate.

5,701,056

PARTITION WALL STRUCTURE FOR PLASMA DISPLAY PANEL

Takuo Shinohara, Tokyo, Japan, assignor to NEC Corporation, Japan

Filed May 9, 1996, Ser. No. 647,332

Claims priority, application Japan, May 31, 1995, 7-133683

Int. Cl.[6] H01J *17/49*

U.S. Cl. 313—584 **12 Claims**

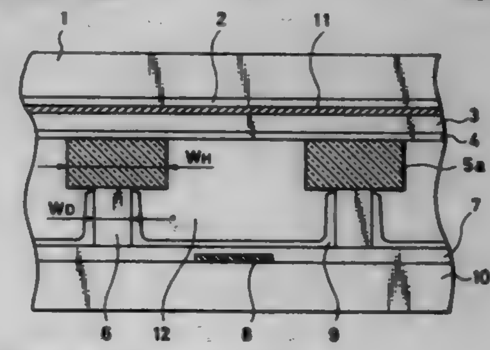

1. A plasma display panel comprising:

a first substrate;

a second substrate;

a plurality of sets of electrode pairs, said sets of electrode pairs being for discharging between said first and second substrates,

each of said sets of electrode pairs being formed on one of said first and second substrates and extending in a direction A;
a partition wall structure formed overlapping said sets of electrode pairs, said partition wall structure including first partition walls extending in a direction B perpendicular to said direction A and second partition walls extending in parallel with said direction A, each of said first and second partition walls defining a cell therein; and
third partition walls extending in said direction B,
said first partition walls having a width W_H greater than a width W_D of said third partition walls, said widths W_H and W_D being measured in said direction A, said third partition walls being sandwiched between said partition wall structure and the other of said first and second substrates so that said third partition walls are fully covered in widthwise direction by said first partition walls.

5,701,057
METHOD OF OBTAINING ELECTRIC DISCHARGE AND DEVICE FOR EFFECTING SAME

Jury Vasilievich Gerasimov; Jury Moiseevich Grinberg, both of Moscow; Georgy Andreevich Djuzhev, Sankt-Peterburg; Anatoly Anatolievich Kalistov, Moscow; Vladimir Ilich Kurilenko, Moscow, and Vadim Izrailovich Rakhovsky, Moscow, all of U.S.S.R., assignors to Rossisko-shveitsarskoe aktsionernoe obschestvo zakrytogo tipa "NOVA", Moscow, U.S.S.R.

PCT No. PCT/SU91/00252, § 371 Date Jun. 30, 1994, § 102(e) Date Jun. 30, 1994, PCT Pub. No. WO93/11591, PCT Pub. Date Jun. 10, 1993
PCT Filed Nov. 29, 1991, Ser. No. 256,301
Int. Cl.⁶ H01J *37/00*
U.S. Cl. 315—111.21 **7 Claims**

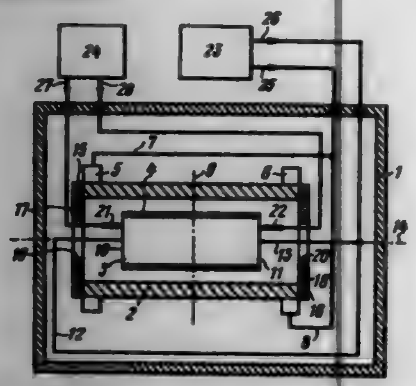

1. A method of obtaining an electric discharge by way of setting up a voltage in a device across an anode and a cathode comprising building up and uninterruptedly maintaining around the anode and the cathode a reduced gas pressure corresponding to a diffusion rate of a discharge in an anode region;
initiating and maintaining an electric discharge in a gap between the anode and cathode with cathode spots and a formation of a plasma forming substance from products of erosion of a surface of the cathode and the plasma, and a random scanning of the entire surface of the cathode by the cathode spots up to the termination of the electric discharge;
before setting up a voltage across the anode and the cathode forming a uniform layer of oxides of material of the cathode and insuring an equality of impedances at each point of surface of the anode facing the cathode;
when setting up the voltage across the anode and the cathode, selecting a value of the voltage depending upon physico-chemical characteristics of the layer of oxides of the material of the cathode on the surface of the cathode;
initiating and maintaining an electric discharge in the gap between the anode and the cathode in order to obtain a flow of the plasma forming substance from the products of erosion of the layer of oxides of the material of the cathode on the surface of the cathode;
simultaneously with a random scanning of the cathode surface by the cathode spots regulating the movement of the flow of the plasma forming substance and removing the plasma forming substance from the gap between the anode and the cathode; and
accomplishing the random scanning by the cathode spots only once on the layer of oxides of the material of the cathode upon termination of the electric discharge after the layer of oxides of the material of the cathode is completely removed from the surface of the cathode.

5,701,058
METHOD OF SEMIAUTOMATIC AMBIENT LIGHT SENSOR CALIBRATION IN AN AUTOMATIC CONTROL SYSTEM

Roger R. Roth, Minnetonka, Minn., assignor to Honeywell Inc., Minneapolis, Minn.

Filed Jan. 4, 1996, Ser. No. 582,861
Int. Cl.⁶ H05B *37/02*
U.S. Cl. 315—158 **9 Claims**

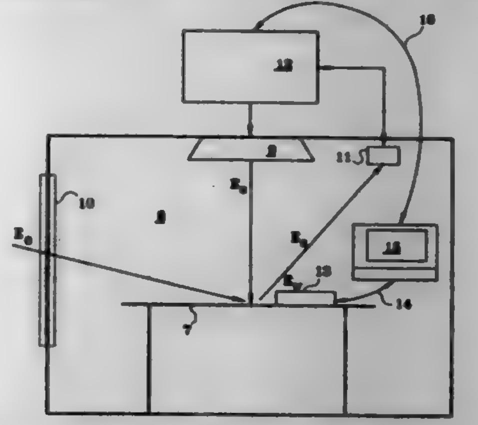

1. A method of calibrating a dimmable lighting system, having an electric lighting fixture, or ambient light sensor, an electronic controller and a programmer for controlling a feedback loop between said ambient light sensor and said electronic controller, comprising the steps of:
adjusting an output level of an electric lighting fixture in a workspace to a minimum and adjusting an outdoor light level in the workspace to a minimum;
sensing and recording a first illumination level at an ambient light sensor and a first illumination level at a lighting point of interest;
adjusting the output level of the electric lighting fixture to a maximum;
sensing and recording a second illumination level at said ambient light sensor and a second illumination level at said lighting point of interest;
adjusting said outdoor light level to a maximum and adjusting said electric lighting fixture output level to a minimum;
sensing and recording a third illumination level at the ambient light sensor and a third illumination level at the lighting point of interest;
adjusting said output level of said electric lighting fixture to a maximum while holding said outdoor light level at a maximum;
sensing and recording a fourth illumination level at the ambient light sensor and a fourth illumination level at the lighting point of interest;
calculating a gain value and a setpoint value for said dimmable lighting system from the eight sensed illumination levels and a predetermined illumination level at the lighting point of interest;
communicating the gain value and the setpoint value to the electronic controller of the dimmable lighting system, said electronic controller utilized to control an electrical input to the electric lighting fixture.

5,701,059
ELIMINATION OF STRIATIONS IN FLUORESCENT LAMPS DRIVEN BY HIGH-FREQUENCY BALLASTS

Robert Louis Steigerwald, Burnt Hills, and Ljubisa Dragoljub Stevanovic, Clifton Park, both of N.Y., assignors to General Electric Company, Schenectady, N.Y.

Filed Dec. 26, 1995, Ser. No. 578,795
Int. Cl.⁶ H05B *41/14*
U.S. Cl. 315—219 **11 Claims**

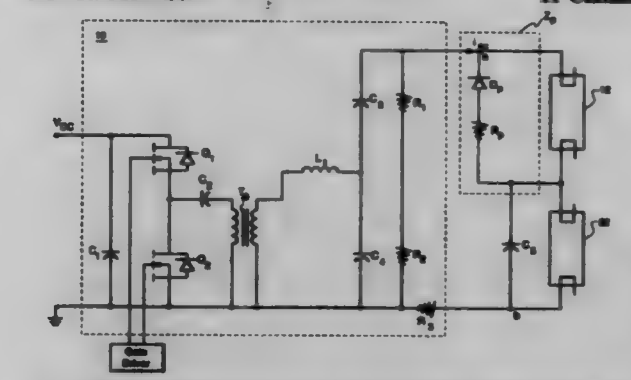

1. A ballast system for at least one dimmable fluorescent lamp, comprising:
a ballast inverter for driving said at least one dimmable fluorescent lamp to provide light output; and
a parallel impedance for coupling across said at least one fluorescent lamp for providing an alternative path to divert sufficient ac current to avoid developing striated light output.

5,701,060
ON-CHIP HIGH FREQUENCY DAMPING FOR LASER DIODE DRIVER CHIPS

Steven A. Buhler, Sunnyvale, and Hamid T. Bahramian, Terrence, both of Calif., assignors to Xerox Corporation, Stamford, Conn.

Filed May 3, 1996, Ser. No. 642,815
Int. Cl.⁶ H05B *43/00*
U.S. Cl. 315—227 R **4 Claims**

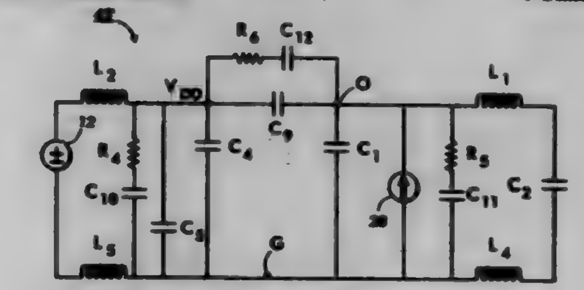

1. A laser diode driver chip comprising:
a voltage receiving node;
an output node;
a chip ground;
a first resistor;
a first capacitor;
said voltage receiving node and said chip ground being electrically connected to each other through said first resistor and said first capacitor;
said first resistor and said first capacitor between said voltage receiving node and said chip ground being in series with each other;
a second resistor;
a second capacitor;
said output node and said chip ground being electrically connected to each other through said second resistor and said second capacitor;
said second resistor and said second capacitor between said output node and said chip ground being in series with each other; and
and said laser diode driver chip, said first resistor, said first capacitor, said second resistor and said second capacitor being so constructed and arranged to substantially reduce ringing on a current generated by said laser diode driver chip.

5,701,061

Patent Not Issued For This Number

5,701,062
PULSING CONTROL FOR AN INERTIAL DRIVE SYSTEM FOR A MULTI-MOTOR BINARY ARRAY VEHICLE

Robert D. Barrett, 10261 Canterbury St., Westchester, Ill. 60154

Division of Ser. No. 378,173, Jan. 25, 1995, Pat. No. 5,627,438. This application Jan. 21, 1997, Ser. No. 785,083
Int. Cl.⁶ H02P *1/54;7/67*
U.S. Cl. 318—51 **12 Claims**

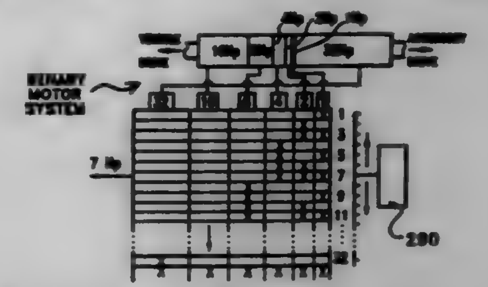

1. A power system for propelling a vehicle comprising:
a first motor having a first optimal operating horsepower range;
a second motor having a second optimal operating horsepower range, the second optimal operating horsepower range having a value twice that of the first optimal operating horsepower range;
a third motor having a third optimal horsepower range with a value twice that of the second optimal operating horsepower range of the second motor;
a wheeled chassis, whereon is mounted the first motor, second and third motor;
an accelerator pedal;
a transducer;
a power transmitter;
a controller;
a gear means, mounted to the chassis, for receiving selected rotational power from the first motor, the second motor and the third motor and transferring the power to at least one wheel of the chassis;
a first clutch means for selectively engaging and disengaging the first motor to the gear means to selectively communicate rotational power;
a second clutch means for selectively engaging and disengaging the second motor to the gear means to selectively communicate rotational power; and
a third clutch means for selectively engaging and disengaging the third motor to the gear means to selectively communicate rotational power;
the transducer sending a power demand signal from a position of the accelerator pedal to the controller, the controller receiving an actual horsepower signal from the transmitter, the transmitter reading actual horsepower from the gear means to the wheel, and the controller sending an engagement signal to the first clutch means, the second clutch means and the third clutch means to selectively engage the first motor, the second motor and the third motor to the gear means.

5,701,063
OBSTRUCTION-SENSING SYSTEM FOR A MOVABLE MEMBER

Roger Joseph Cook, Livonia; Joseph Paul DeVoe, Royal Oak; Kevin Douglas Macfarlane, Plymouth; Daniel Robert Parks, Farmington, and Patrick William Gilmore, Northville, all of Mich., assignors to Ford Global Technologies, Inc., Dearborn, Mich.

Filed Apr. 5, 1995, Ser. No. 417,359
Int. Cl.⁶ H02H *7/085;* **H02P** *1/22*
U.S. Cl. 318—469 **18 Claims**

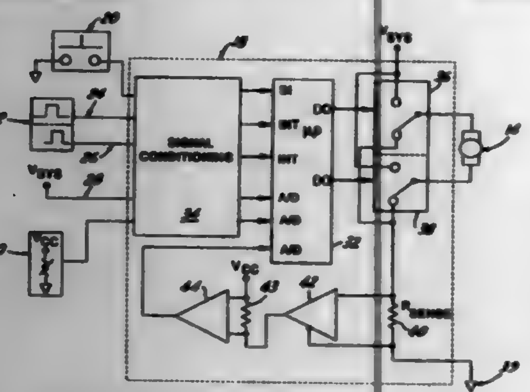

1. A method for detecting an obstruction of a moving member, said method comprising the steps of:
(a) taking a plurality of measurements of a variable representative of a force resisting the movement of said member;
(b) comparing the last said measurement with more than one previous said measurements taken over a predetermined distance of movement of said moving member during the present movement of said moving member; and
(c) reversing or stopping the movement of said moving member if at least one of said comparisons yields a difference larger than a predetermined value.

14. An apparatus for detecting the obstruction of a movable member, said apparatus comprising:
(a) a movable member;
(b) a motor mechanically coupled to drive said movable member;
(c) means for taking, when said movable member is moving, a plurality of measurements of a quantity representing a force resisting movement of said movable member;
(d) means for comparing the last said measurement with more than one previous said measurements taken over a predetermined number of rotations of said motor during the present movement of the movable member; and
(e) means for stopping or reversing the movement of said movable member if said comparison yields a difference greater than a predetermined value.

5,701,064
ROTOR POSITION SENSING IN A DYNAMOELECTRIC MACHINE USING COUPLING BETWEEN MACHINE COILS

Gary E. Horst, Manchester, and Alan P. French, Florissant, both of Mo., assignors to Emerson Electric Co., St. Louis, Mo.

Filed Oct. 27, 1995, Ser. No. 549,457
Int. Cl.⁶ H02P *1/46*
U.S. Cl. 318—701 **35 Claims**

1. A polyphase dynamoelectric machine having a stator assembly and a rotor assembly which is movable with respect to the stator assembly, the stator assembly including a stator having a plurality of stator poles and the rotor assembly including a rotor having a plurality of rotor poles, the stator assembly further including a plurality of separately energizable stator windings associated with respective machine phases, the stator windings being energized and de-energized in a predetermined sequential manner to

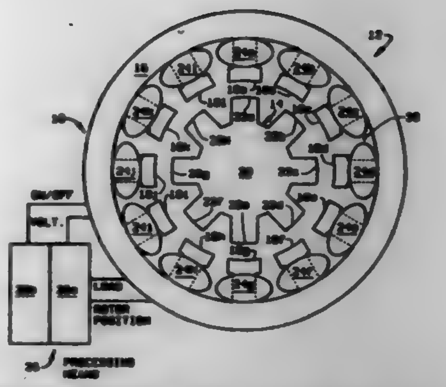

sequentially activate and deactivate the machine phases, the energization and de-energization of the respective stator windings being determined at least partially as a function of the instantaneous rotor position, and said machine including means for determining an instantaneous rotor position by measuring a circulating current coupled from an energized stator winding for an active machine phase into a de-energized stator winding for an inactive machine phase, the respective energized and de-energized stator windings being interconnected to form a closed circuit path by which the circulating current in the energized stator winding is coupled into the de-energized stator winding, and said means monitoring the resultant circulating current waveform for an indication of rotor position.

5,701,065
METHOD AND APPARATUS FOR CONTROLLING SYNCHRONOUS MOTOR

Akira Ishizaki, No. 22-5, Nagatakita 3-chome, Minami-ku, Yokohama-shi, Kanagawa, Japan

Continuation-in-part of Ser. No. 336,238, Nov. 7, 1994, abandoned. This application Jan. 11, 1996, Ser. No. 584,176
Claims priority, application Japan, Nov. 18, 1993, 5-289863
Int. Cl.⁶ H02P *1/46*
U.S. Cl. 318—701 **30 Claims**

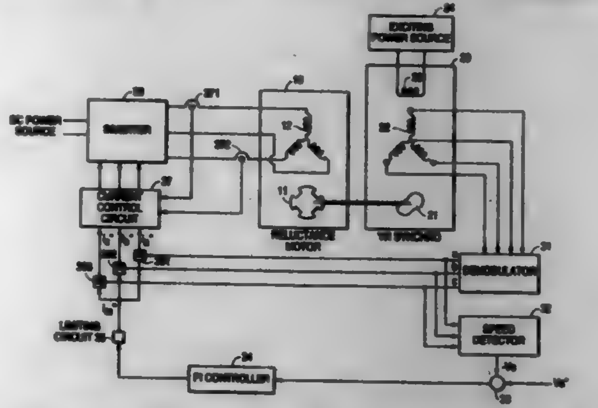

1. An apparatus for controlling a synchronous motor having 2N poles, where N is an integer greater than or equal to one, comprising:
an angular position transducer including output windings in which three-phase voltages with amplitude variations of N cycles per revolution are induced, the angular position transducer being mechanically directly coupled to the motor so that a demodulated a-phase voltage of the transducer has its positive peak value multiplied by a cosine of a predetermined MMF phase angle when a direct axis of the motor is located in a position of its a-phase winding axis;
an inverter for outputting three-phase currents for feeding the motor;
a demodulator for demodulating the three-phase output voltages of the angular position transducer;

a speed detector for determining an actual speed and rotating direction and for determining a speed deviation which is the difference between the actual speed and a target speed;
a PI controller for providing a current amplitude instruction signal based on the speed deviation; and
three multipliers for respectively multiplying the voltage output by the PI controller by the three-phase output voltages of the demodulator for generating three-phase current instructions for inputting to a current control circuit of the inverter.

5,701,066
CONTROL SYSTEM FOR AN INDUCTION MOTOR

Sadahiro Matsuura; Shigeru Satou; Yasuhiro Kondou, all of Osaka, and Yoshiaki Igarashi, Nara, all of Japan, assignors to Matsushita Electric Industrial Co., Ltd., Osaka, Japan

Division of Ser. No. 570,871, Dec. 12, 1995. This application Jan. 16, 1997, Ser. No. 783,431
Claims priority, application Japan, Dec. 14, 1994, 6-310400; Apr. 20, 1995, 7-094713
Int. Cl.⁶ H02P *7/628*
U.S. Cl. 318—808 **11 Claims**

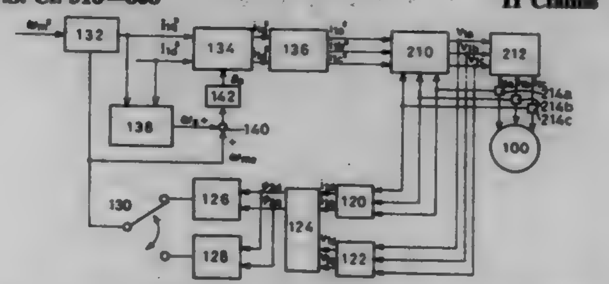

1. A control system for an induction motor for independently commanding torque current components and exciting current components of a stator current group sent to the stator of an induction motor, and for changing the amplitude and the frequency of the stator current group so as to control the induction motor comprising;
a torque detector for detecting an output torque of the induction motor, and
torque control means for changing the amplitude of the stator current group based on a command torque of the induction motor and the amplitude of a predetermined exciting current component, and for changing the frequency of the stator current group based on the amplitude of the exciting current component, the command torque and the output of the torque detector so as to control the output torque of the induction motor.

5,701,067
BATTERY CHARGER AND SOLAR CELLS FOR BATTERY CHARGING

Masanori Kaji; Masayosi Ono; Yosinobu Takabatake, all of Sumoto; Yosinori Kaido, Tsuna Gun; Takahiro Haga, and Masaru Hikosaka, both of Mihara Gun, all of Japan, assignors to Sanyo Electric Co., Ltd., Moriguchi, Japan

Filed Feb. 7, 1996, Ser. No. 598,019
Claims priority, application Japan, Feb. 24, 1995, 7-037026; Apr. 28, 1995, 7-105419; Sep. 29, 1995, 7-253563; Nov. 24, 1995, 7-305999
Int. Cl.⁶ H01M *10/44*
U.S. Cl. 320—2 **6 Claims**

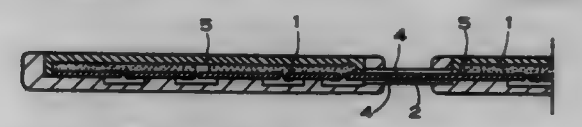

1. A battery charger comprising:
a solar cell for charging a battery;
a battery charging unit including a bag defining an interior storage compartment for carrying said solar cell when not charging and electrical equipment containing a battery, said bag having a ventilation section corresponding to a storage location of the electrical equipment; and
a plurality of electrical connecting parts for electrically connecting said solar cell to the battery contained in the electrical equipment in said battery charging unit for charging the battery while the electrical equipment is carried in said bag.

5,701,068
BATTERY MANAGEMENT SYSTEM

Jose T. Baer, Sacramento, Calif.; Bill C. Davis, Round Rock, and Richard J. Blanyer, Smithville, both of Tex., assignors to Electrosource, Inc., San Marcos, Tex.

Continuation of Ser. No. 412,197, Apr. 3, 1995, abandoned. This application Dec. 5, 1996, Ser. No. 761,002
Int. Cl.⁶ H02J *7/00;* **H01M** *10/44*
U.S. Cl. 320—15 **46 Claims**

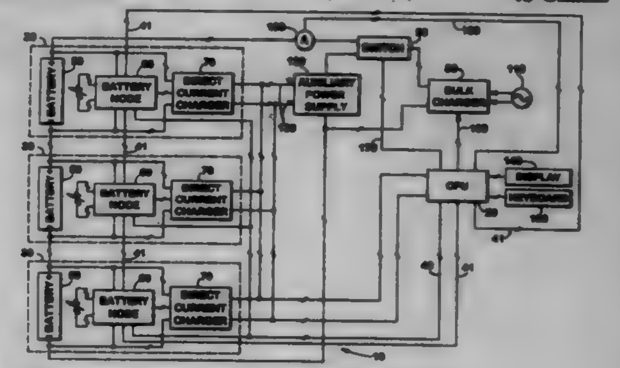

13. A battery management system, comprising:
a programmed central processing unit;
a plurality of battery modules in communication with said programmed central processing unit, each said battery module comprising:
a rechargeable battery;
a sensor node operably coupled to said rechargeable battery, said sensor node comprising:
a plurality of battery condition sensors operably coupled to said rechargeable battery and adapted to generate a plurality of battery condition signals representative of a plurality of operating conditions of said rechargeable battery; and
a programmed microcontroller in communication with said plurality of battery condition sensors and adapted to process said plurality of battery condition signals to generate a plurality of battery status signals representative of a plurality of status conditions of said rechargeable battery; and
a direct current charger operably coupled to said rechargeable battery and adapted to controllably provide a charging current to said rechargeable battery;
a bulk battery charger in communication with said programmed central processing unit and operably coupled to said rechargeable batteries and adapted to controllably provide a bulk charging current to all of said rechargeable batteries;
a current sensor in communication with said programmed central processing unit and operably coupled to said bulk battery charger and adapted to generate a bulk charging current signal representative of a bulk charging current level;
an auxiliary power supply operably coupled to each of said direct current chargers and adapted to provide a DC power supply to each of said direct current chargers; and
a control switch operably coupled to said bulk battery charger and in communication with said programmed central processing unit and adapted to controllably interrupt said bulk charging current;
wherein said rechargeable batteries are connected in series.

35. A method for charging and maintaining a plurality of rechargeable batteries connected in series in a full and ready condition comprising:

measuring a temperature of each of said rechargeable batteries;
measuring a voltage of each of said rechargeable batteries;
providing a variable bulk charging current to all of said rechargeable batteries;
reducing said variable bulk charging current when said measured voltage for any of said rechargeable batteries is greater than or equal to a predetermined battery clamping voltage level;
providing a separate charging current to each rechargeable battery whose measured battery voltage is less than said battery clamping voltage level;
interrupting said bulk charging current when said bulk charging current is approximately equal to a predetermined minimum bulk charging current;
providing a separate charging current to each rechargeable battery that is not full;
providing a separate charging current to each full rechargeable battery whose measured temperature is less than a predetermined minimum temperature at a full and ready condition; and
providing a separate charging current to each full rechargeable battery whose measured battery voltage is less than a predetermined lower level at a full and ready condition.

5,701,069
METHOD AND DEVICE FOR CHARGING LEAD ACCUMULATORS
Bernt E L Wihk, Malmö , Sweden, assignor to Livingstones Patenter AB, Sweden
PCT No. PCT/SE94/00479, § 371 Date Jan. 3, 1996, § 102(e) Date Jan. 3, 1996, PCT Pub. No. WO94/28610, PCT Pub. Date Dec. 8, 1994
PCT Filed May 24, 1994, Ser. No. 553,484
Claims priority, application Sweden, May 24, 1993, 9301756-4
Int. Cl.⁶ H01M *10/44*
U.S. Cl. 320—21 **11 Claims**

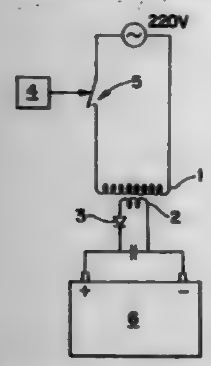

1. A method for charging lead storage batteries, comprising applying a varying direct voltage from a battery-charging unit which is sufficient to generate gassing at the positive and negative pole, characterized in that this gassing is achieved by applying the direct voltage in intermittent current supply periods that are interrupted with pauses in which no current is supplied, having durations of between about 0.5 seconds and about 10 seconds wherein the current supplied to the battery is non-negative throughout the method.

5,701,070
ELECTRICAL GENERATOR DAMAGE PROTECTION APPARATUS AND METHOD WITH CIRCUIT BREAKER TRIP INITIATION
Mark H. Schultz, Shoreview, Minn., assignor to Onan Corporation, Minneapolis, Minn.
Filed Aug. 4, 1995, Ser. No. 511,265
Int. Cl.⁶ H02H *7/06*
U.S. Cl. 322—37 **35 Claims**

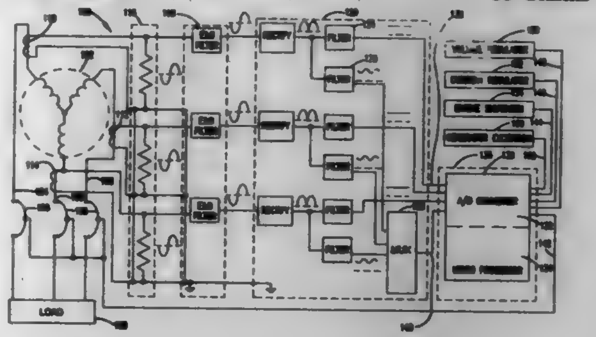

15. An electrical generator system, comprising:
(a) a generator to generate polyphase electrical power;
(b) a circuit breaker, operatively coupled to the generator, to open and close an electrical circuit for each electrical power phase in response to a breaker control signal, the electrical circuit having means for transmitting the electrical power to an external load;
(c) a current sensor, operatively coupled to the generator to periodically sense a magnitude of current for each electrical power phase during each sensing instance to generate a current magnitudes signal; and
(d) control means, operatively coupled to the circuit breaker and the current sensor, to generate the breaker control signal based upon the current magnitudes signal, the control means controlling a square of total current generated by the generator over a predetermined time span to be a value less than a value on a generator damage curve, the generator damage curve corresponding to a maximum amount of total current squared generatable by the generator over the predetermined time span without damaging the generator.

5,701,071
SYSTEMS FOR CONTROLLING POWER CONSUMPTION IN INTEGRATED CIRCUITS
Jiunn-Yau Liou, Cupertino; Richard L. Wheeler, San Jose; Bidyut Sen, Milpitas, and James C. Parker, Jr., Pleasanton, all of Calif., assignors to Fujitsu Limited, Japan
Filed Aug. 21, 1995, Ser. No. 517,572
Int. Cl.⁶ G05F *1/10;1/613;1/12;* **G05B** *24/02*
U.S. Cl. 323—220 **27 Claims**

1. An apparatus for smoothing the current drawn in an area of an integrated circuit chip where one or more sub-circuits are formed, each sub-circuit drawing a variable amount of current, said apparatus comprising:
electrical supply means for delivering electrical current to each said sub-circuit; and
a variable shunt means coupled to said electrical supply means in parallel to each said sub-circuit and positioned on said integrated circuit in the vicinity of said one or more sub-circuits, said variable shunt means conducting a variable amount of current such that the total current drawn by said

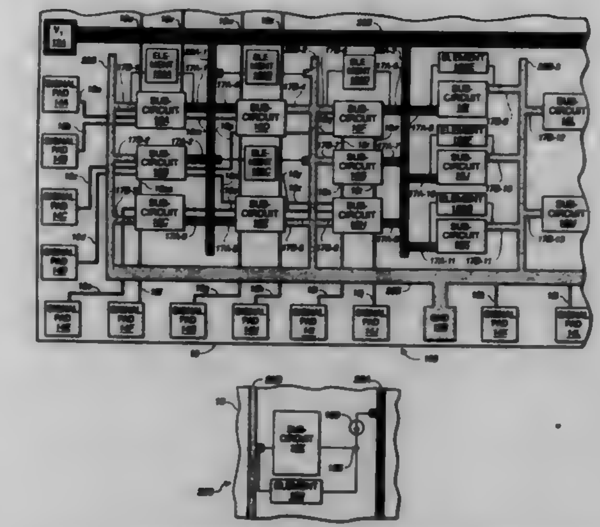

one or more sub-circuits and said variable shunt means is smoother than the current drawn by each said sub-circuit.

5,701,072
INTEGRATED CIRCUIT OUTPUT DRIVER SYSTEMS INCLUDING MULTIPLE POWER AND GROUND LINES
Jun-Young Jeon, Seoul, and Pil-Soon Park, Kyungki-do, both of Rep. of Korea, assignors to Samsung Electronics Co., Ltd., Suwon, Rep. of Korea
Filed Aug. 23, 1996, Ser. No. 702,130
Claims priority, application Rep. of Korea, Aug. 24, 1995, 95 26277
Int. Cl.⁶ G05F *3/04;* **H01H** *3/26*
U.S. Cl. 323—312 **28 Claims**

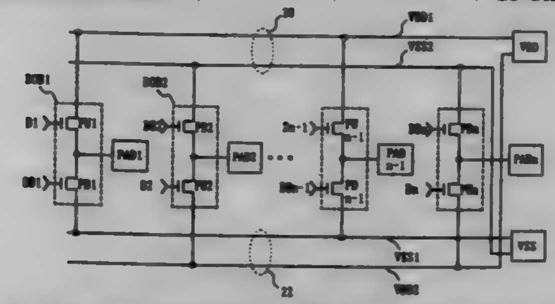

21. An integrated circuit output driver system comprising:
a plurality of output drivers, each of which drives an output node in response to an input signal, and each of which is powered by first and second reference voltages; and
a pair of first reference voltage lines and a pair of second reference voltage lines each of which extend adjacent each of said output drivers, and which power said output drivers.

5,701,073
DIRECT CURRENT MEASURING APPARATUS AND METHOD EMPLOYING FLUX DIVERSION
Clifford E. Baker, Hillsboro, Oreg., assignor to Tektronix, Inc., Wilsonville, Oreg.
Filed Feb. 28, 1996, Ser. No. 608,239
Int. Cl.⁶ G01R *15/06;1/30*
U.S. Cl. 324—117 H **27 Claims**

1. An apparatus for noninvasively measuring a signal current flowing in a conductor that produces a magnetic signal flux proportional to the signal current, comprising:
a pair of spaced-apart probe arms for straddling and magnetically coupling to the conductor for receiving the magnetic signal flux;

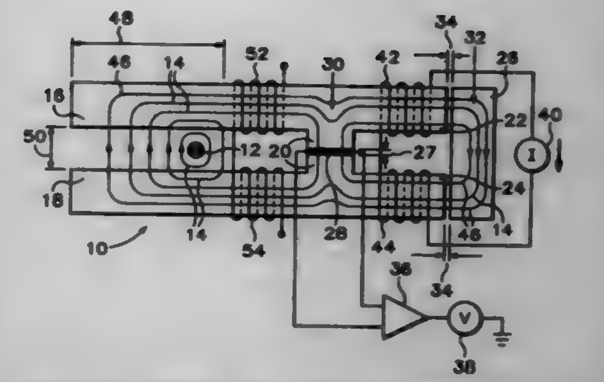

a flux shunt providing a flux shunting path between the probe arms so that a first portion of the magnetic signal flux flows through the flux shunt;
a magnetic flux sensor coupled to the flux shunt for sensing the first portion of the magnetic signal flux;
a flux diverting path magnetically coupled to the probe arms and the flux shunt for diverting a second portion of the magnetic signal flux away from the flux shunt; and
an amplifier electrically coupled to the magnetic flux sensor for driving a diverter current through a diverter coil that is magnetically coupled to the flux diverting path, the diverter current controlling the second portion of the magnetic signal flux such that the first portion of the magnetic signal flux is diverted away from the flux shunting path and into the flux diverting path, the diverter current being proportional to the signal current flowing in the conductor and, thereby, effecting a measurement of the signal current.

5,701,074
SPECTRAL COMPONENT SEPARATION INCLUDING UNWRAPPING OF THE PHASE VIA A POISSON EQUATION UTILIZING A WEIGHTING MAP
Gang Zhu, Fort Collins, Colo., assignor to Elscint Ltd., Haifa, Israel
Filed Apr. 25, 1996, Ser. No. 639,330
Int. Cl.⁶ G01R *33/46*
U.S. Cl. 324—307 **7 Claims**

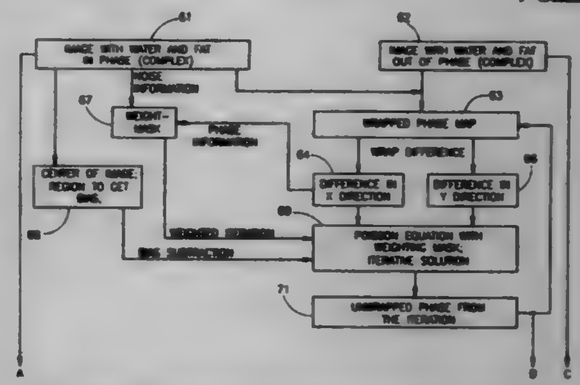

1. A method of using magnetic resonance imaging (MRI) systems for acquiring separate data contributions in images derived from first and second spectral components, the method comprising the steps of:
acquiring two complex images, the first of said two complex images including said first and said second spectral components in-phase, the second of said two complex images including said first and said second spectral components out-of-phase,
generating a wrapped phase map from said two complex images,
unwrapping the phase of the wrapped phase map,
said step of unwrapping the phase comprising the steps of:
solving the Poisson equation with a weighting map to derive an unwrapped phase map,

using the unwrapped phase map to correct the phase of the complex image with the spectral components out-of-phase,
using the image with the corrected phase to obtain a plus image and a minus image, and
distinguishing between the plus and the minus images to determine which is the image of the first spectral component and which is the image of the second spectral component.

5,701,075
MAGNETIC RESONANCE IMAGING SHIMMING BY SUPERCONDUCTING GRADIENT SHIELD
Bu-Xin Xu, Florence, S.C., and Yannis P. Tsavalas, Clifton Park, N.Y., assignors to General Electric Company, Milwaukee, Wis.
Filed Jan. 4, 1996, Ser. No. 583,186
Int. Cl.[6] G01R *33/38;* H01F *7/02*
U.S. Cl. 324—318 10 Claims

1. A superconducting magnetic resonance imager magnet assembly comprising;
a vessel cooled to superconducting temperatures surrounding a central imaging bore;
at least one superconducting main magnet coil in said vessel and surrounding said imaging bore to provide a magnetic field in said imaging bore;
an active resistive shimming member positioned contiguous to said imaging bore for selectively generating harmonic currents and magnetic fields for reducing inhomogeneities in the magnetic field within an imaging region in said imaging bore;
a superconducting gradient shield contiguous to said vessel selectively coded to superconducting temperatures, and interposed between said main magnet coil and said imaging bore;
said superconducting gradient shield being selectively cooled to a superconducting temperature after said resistive shimming member has generated said harmonic currents to enable transfer of said harmonic currents to said superconducting gradient shield; and
means to selectively discontinue the generation of said harmonic currents in said resistive shimming member after said transfer.

5,701,076
NMR GRADIENT POWER SUPPLY INCLUDING A RESONANT CIRCUIT HAVING A FREQUENCY WITH AN ASSOCIATED PERIOD BEING LESS THAN ONE-QUARTER DURATION OF THE GRADIENT CURRENT
Franz Schmitt, Erlangen, and Stefan Nowak, Braeuningshof, both of Germany, assignors to Siemens Aktiengesellschaft, Munich, Germany
Filed Mar. 19, 1996, Ser. No. 617,568
Claims priority, application Germany, Mar. 30, 1995, 195 11 833.2
Int. Cl.[6] G01R *33/36;* A61B *5/055*
U.S. Cl. 324—322 18 Claims

1. A gradient current supply for generating a gradient current for a gradient coil in a nuclear magnetic resonance tomography apparatus, comprising:

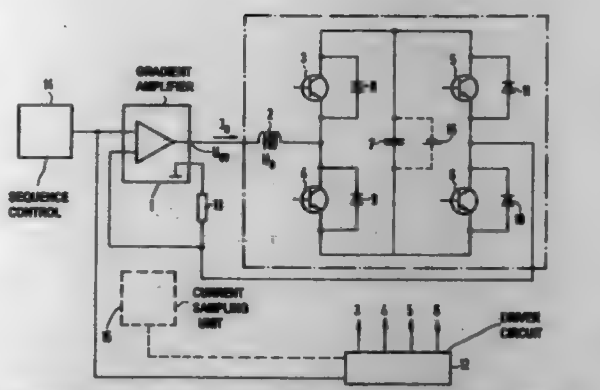

a controllable gradient amplifier having a control loop associated therewith;
a unit connected in said control loop containing a capacitor and switching means for switching said capacitor into a series connection with said gradient coil, said gradient current amplifier and said control loop comprising means for generating a voltage for producing a predetermined gradient current supplied to said gradient coil, said voltage being generated by said gradient amplifier and supplemented, when necessary, by a voltage generated by said capacitor, said gradient current comprising a pulse having a leading edge and a trailing edge; and
said capacitor, when in said series connection with said gradient coil, comprising a series combination having a resonant frequency with an associated period which is less than one-quarter of a duration of said leading edge of said gradient current.

5,701,077
MISFIRE DETECTING DEVICE FOR GASOLINE INTERNAL COMBUSTION ENGINE
Hiroshi Inagaki, Nagoya, Japan, assignor to NGK Spark Plug Co., Ltd., Nagoya, Japan
Filed Nov. 9, 1995, Ser. No. 555,446
Claims priority, application Japan, Nov. 9, 1994, 6-275365; Apr. 25, 1995, 7-101279
Int. Cl.[6] F02P *17/00*
U.S. Cl. 324—399 13 Claims

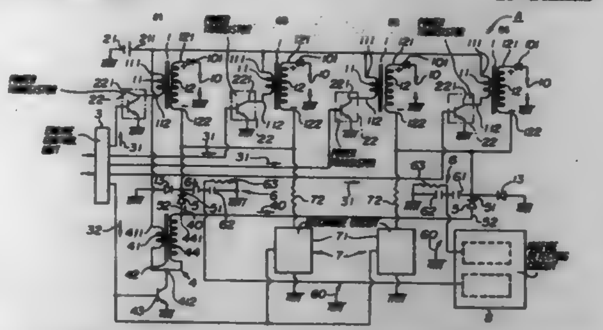

6. A misfire detecting device for a double-ended distributorless ignition system having a plurality of ignition coils for simultaneous spark, primary current supplying means for supplying battery current to primary windings of the ignition coils intermittently and in turn, and positive ignition spark plugs connected at center electrodes to positive pole sides of respective secondary windings of the ignition coils and grounded at outer electrodes, negative ignition spark plugs connected at center electrodes to negative pole sides of the respective secondary windings and grounded at outer electrodes, the misfire detecting device comprising:

pulse generating means for generating a positive polarity pulse which is not so high as to cause spark discharge, during the time after completion of spark discharge of one of the spark plugs and before application of a high voltage for ignition to another of the spark plugs which is to discharge next;
first diodes connected at anodes to an output end of said pulse generating means;
second diodes connected at anodes to the cathodes of said respective first diodes and at cathodes to positive pole sides of the respective secondary windings;
voltage dividing means for dividing voltages at connecting lines connecting between the cathodes of said first diodes and the anodes of said second diodes to obtain divided voltages thereat;
detecting means for detecting a misfire on the basis of decay characteristics of said divided voltages after application of said high voltage pulse; and
discharge means for discharging a charge accumulated in each of said connecting lines before said pulse generating means generates a next high voltage pulse.

5,701,078
METHOD OF MEASURING RESIDUAL CAPACITY OF A NI/MH CELL
Jai-Young Lee; Hwan-Cheol Lee, both of Taijeon; Jon-Ha Lee, Cheolapuk-Do; Han-Ho Lee, Seoul, and Dong-Myung Kim, Taijeon, all of Rep. of Korea, assignors to Korea Advanced Institute of Science and Technology, Taijeon, Rep. of Korea
Filed Jul. 13, 1995, Ser. No. 501,823
Claims priority, application Rep. of Korea, Jul. 13, 1994, 94-16809
Int. Cl.[6] G01N *27/27*
U.S. Cl. 324—430 17 Claims

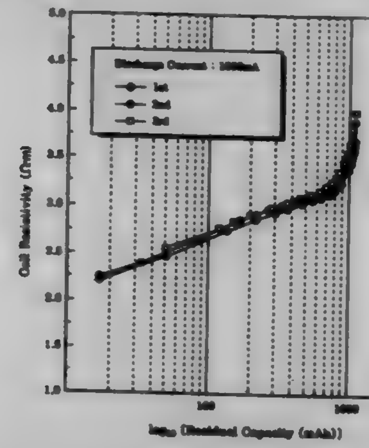

1. A method of measuring residual capacity of a nickel/metal hydride (Ni/MH) cell comprising the steps of:
(i) measuring electrical resistivity of a first Ni/MH cell; and
(ii) determining the residual capacity of said first Ni/MH cell from said electrical resistivity of said first Ni/MH cell based on a predetermined functional relationship between the electrical resistivity and residual capacity of a second Ni/MH cell which has substantially the same composition as the composition of said first Ni/MH cell, wherein said predetermined functional relationship represents substantially a linear proportionality between the resistivity and the logarithmic value of the residual capacity.

5,701,079
CONNECTOR TERMINAL CHECKING DEVICE
Sakai Yagi; Tamio Watanabe, and Toru Nagano, all of Shizuoka, Japan, assignors to Yazaki Corporation, Tokyo, Japan
Filed Jul. 31, 1996, Ser. No. 688,763
Claims priority, application Japan, Aug. 2, 1995, 7-197688
Int. Cl.[6] H01H *32/04*
U.S. Cl. 324—538 4 Claims

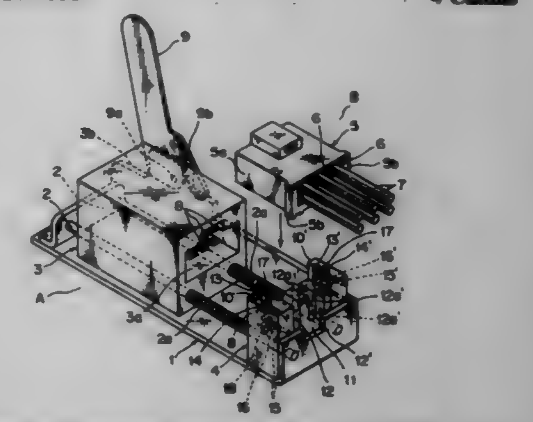

1. A connector terminal checking device comprising a base plate, a checking body movably mounted on the base plate, and a connector holder fixed onto the base plate, wherein said checking body further comprises a plurality of check pins aligned facing toward said connector holder, and said connector holder is provided with a terminal holding wall formed with a plurality of terminal position regulating sections, each for receiving a corresponding one of a plurality of terminal accommodating chambers of a connector to be checked, and also provided with a pair of connector sustainers shiftably urged by way of a resilient stuff, wherein by making said checking body approach to the connector installed in said connector holder to bring the terminals in the connector into contact with said check pins to be electrically connected, and also shifting the connector thereby, the terminals improperly inserted in the accommodating chamber are abutted against said terminal position regulating section and shifted to the properly inserted position.

5,701,080
METHOD OF IMPROVING FAULT CURRENT MEASUREMENT ACCURACY ON ELECTRONIC RECLOSURE CONTROL
Philip P. Schumacher, Greenfield, and James C. Cummins, Greendale, both of Wis., assignors to Cooper Industries, Inc., Houston, Tex.
Filed Mar. 10, 1995, Ser. No. 401,730
Int. Cl.[6] H01H *31/02;* G01R *15/12*
U.S. Cl. 324—539 18 Claims

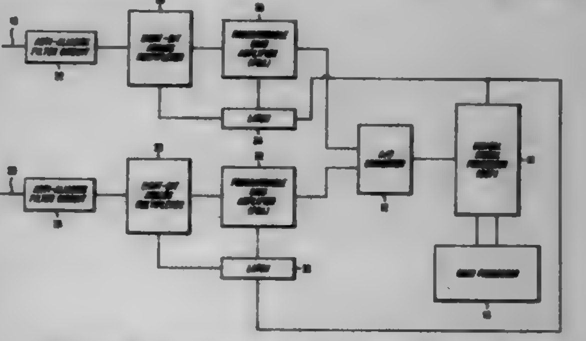

1. A method for measuring fault current on a power line comprising the steps of:

a) obtaining a first sample from a first input channel, wherein the first input channel exhibits a first sensitivity level;
b) calculating a first current magnitude from the first sample;
c) comparing the first current magnitude to a possible current saturation value;
d) if the first current magnitude is less than the possible current saturation value,
  i. obtaining a second sample from a second input channel, wherein the second input channel exhibits a second sensitivity level that is different from the first sensitivity level, and
  ii. calculating the second current magnitude from the second sample;
e) scaling the second current magnitude by a scale factor; and
f) selecting the second current magnitude as the fault current measurement.

5,701,081
INSTRUMENT USED FOR THE LIVE TROUBLESHOOTING OF SHORT CIRCUITS
Leon St Aubyn Rapaport, 7503 Forrest Ave., Philadelphia, Pa. 19150
Filed Jan. 22, 1996, Ser. No. 588,050
Int. Cl.⁶ G01R *31/02*
U.S. Cl. 324—555 **1 Claim**

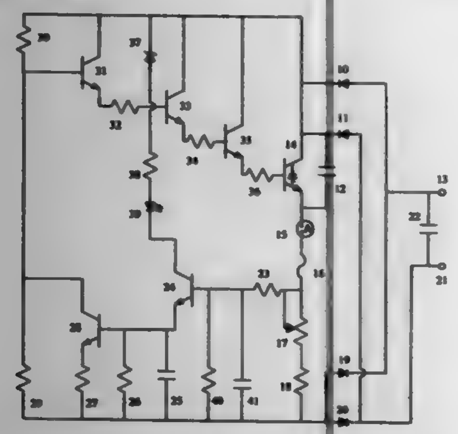

1. An apparatus for detecting a short circuit condition in television horizontal deflection circuits, wherein the apparatus comprises:
leads electrically connected to a television horizontal deflection circuit for receiving a test current from said television horizontal deflection circuit at a time during which said television horizontal deflection circuit is live;
diode circuitry having a plurality of diodes and connected to said leads, for directing said test current from said television horizontal deflection circuit through an ammeter in a predetermined direction regardless of the orientation of the polarity of the leads;
an active circuit having a plurality of electrically conductive active elements connected in series with said ammeter for controlling said test current so that the controlled test current is maintained at a safe level to prevent damage to said apparatus and said television horizontal deflection circuit;
and an indicating means connected in parallel with said ammeter and said active circuit for visually indicating the presence of a short circuit condition.

5,701,082
PROBE FOR SENSING MOCULATED SIGNALS AND METHOD OF USING SAME
Wesley A. Rogers, Grosse Pointe Park, Mich., assignor to Electronic Development, Inc., Grosse Pointe Park, Mich.
Division of Ser. No. 388,194, Feb. 13, 1995, Pat. No. 5,552,715, which is a division of Ser. No. 44,219, Apr. 7, 1993, Pat. No. 5,414,345, which is a continuation-in-part of Ser. No. 692,719, Apr. 29, 1991, abandoned. This application Jun. 7, 1996, Ser. No. 659,222
Int. Cl.⁶ G01R *27/28*
U.S. Cl. 324—628 **42 Claims**

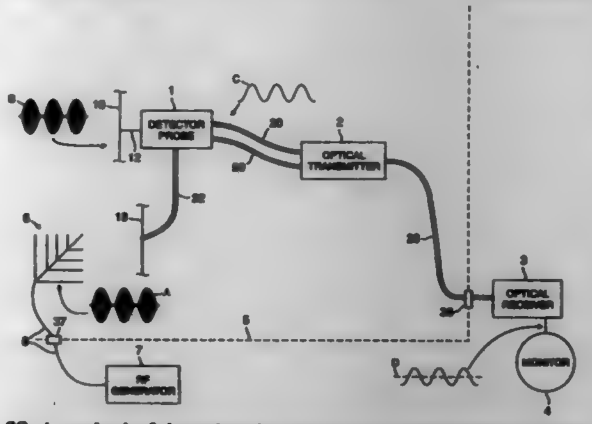

28. A method of detecting the level of an electromagnetic signal coupled into an electrical circuit in the electromagnetic field comprises the steps of:
(a) exposing the circuit to an electromagnetic field;
(b) connecting a probe detector having a detector diode to a conductor of the circuit and monitoring a signal produced in the circuit conductor while the circuit is in the electromagnetic field; and
(c) coupling the monitored signal to a receiver that is outside of the amplitude modulated electromagnetic field.

5,701,083
APPARATUS FOR MEASURING CONSISTENCY AND FLOW RATE OF A SLURRY
Ira B. Goldberg, Thousand Oaks, Calif.; David L. Mays, Woodstock, and Laurel A. Moormann, Roswell, both of Ga., assignors to Allen-Bradley Company, Inc., Milwaukee, Wis.
Filed Mar. 21, 1995, Ser. No. 408,658
Int. Cl.⁶ G01N *22/04*
U.S. Cl. 324—642 **8 Claims**

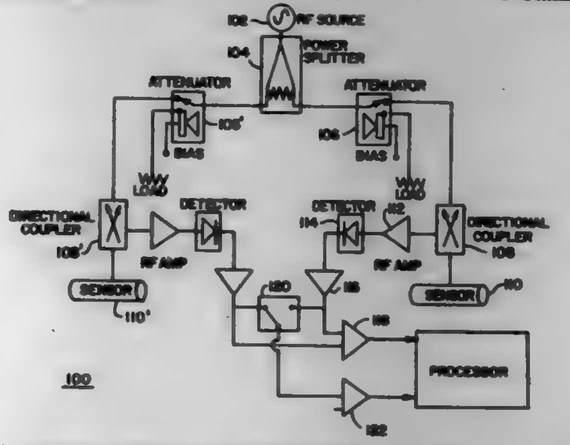

1. A flow monitor for measuring the rate of flow of a slurry comprising:
two slotted waveguide sensors immersible in a slurry to be measured, each sensor comprising a transmitting antenna and a receiving antenna;
an RF signal source;

switching circuitry coupled to the RF signal source and each sensor;
wherein the switching circuitry is comprised of a plurality of channels, each channel comprising:
an attenuator;
a directional coupler disposed between and coupled to the attenuator and the sensor;
an amplifier coupled to the directional coupler;
a detector coupled to the amplifier;
a switch for activating any or all channels and further coupling an output signal to the processor; and
a processor coupled to the switching circuitry for correlating the sensed data dielectric constant from each sensor and providing control signals to the switching circuitry.

5,701,084
INSULATED CAPACITANCE PROBE
James Thomas Borthwick, Jr., Winfield, and Christopher Michael Zalud, Westmont, both of Ill., assignors to Magnetrol International, Inc., Downers Grove, Ill.
Filed Sep. 22, 1995, Ser. No. 532,086
Int. Cl.⁶ G01F *23/26*
U.S. Cl. 324—690 **23 Claims**

1. An insulated probe assembly for use with a process instrument adapted to detect a condition of a material in a process vessel, the insulated probe assembly comprising:
an adaptor receivable in an opening of the process vessel, the adaptor including a through opening having an enlarged counterbore at an outer end defining an inner shoulder;
a probe extending through the adaptor into the process vessel, the probe narrowing from an outer process end to an inner end at a sloped shoulder positioned in the adaptor counterbore;
an insulator sleeve surrounding the probe and having an inner end extending into the adaptor counterbore and engaging the shoulder, and an opposite outer end extending beyond an outer end of the probe;
plug means for sealing the probe in the insulator sleeve at the sleeve outer end;
a tubular insulating probe cover surrounding the probe sloped shoulder and at least partially received in the adaptor end of the insulator sleeve and extending beyond the shoulder; and
fastening means operatively securing the probe to the adaptor, wherein the probe sloped shoulder exerts a generally radial force on the probe cover to minimize stress.

5,701,085
APPARATUS FOR TESTING FLIP CHIP OR WIRE BOND INTEGRATED CIRCUITS
Deviprasad Malladi, Campbell; Lee Frederick Hanson, Cupertino, and Jean Kahahane, Redwood City, all of Calif., assignors to Sun Microsystems, Inc., Mountain View, Calif.
Filed Jul. 5, 1995, Ser. No. 498,791
Int. Cl.⁶ G01R *1/07*
U.S. Cl. 324—754 **17 Claims**

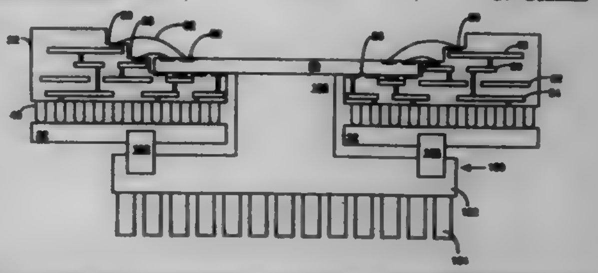

1. A method of constructing a test apparatus configured to test wire bond or flip chip connected integrated circuits, said method comprising the steps of:
providing a housing including
  flip chip pads to accommodate flip chip solder connections to a first integrated circuit, and
  wire bond pads to accommodate wire bond connections to a second integrated circuit, wherein said first integrated circuit is positioned in said housing during a first test period and said second integrated circuit is positioned in said housing during a second test period;
providing a housing with a top side, a bottom side, and a perimeter region defining a housing central aperture;
providing connector pins on the bottom side of said housing;
providing a multi-planar conductive interconnection structure electrically connecting said connector pins with said wire bond pads and said flip chip pads; and
providing a printed circuit board electrically connected to said connector pins, said printed circuit board including an access aperture which is aligned with said housing central aperture.

5,701,086
CONNECTING TEST EQUIPMENT TO ADJACENT LEGS OF AN IC OR THE LIKE BY INTERDIGITATING CONDUCTIVE WEDGES WITH THE LEGS
Robert H. Wardwell, Colorado Springs, Colo., assignor to Hewlett-Packard Company, Palo Alto, Calif.
Filed Oct. 26, 1993, Ser. No. 143,005
Int. Cl.⁶ G01R *1/073*
U.S. Cl. 324—762 **7 Claims**

6. A method of electrically connecting test equipment to each of

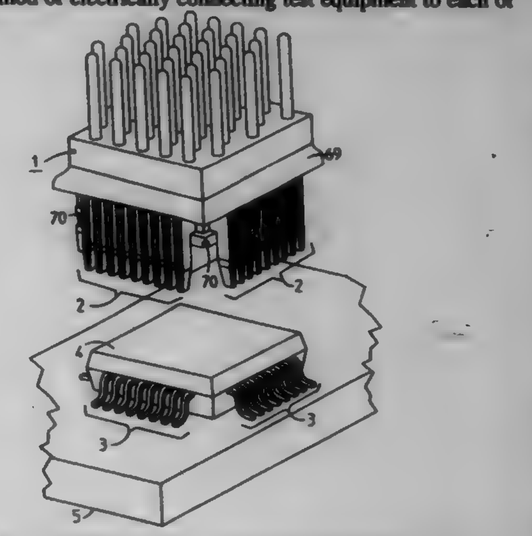

a plurality of n adjacent pins of an electronic component, the method comprising the steps of:

wedging the n adjacent pins into n spaces between n+1 adjacent tapered fingers, each tapered finger having first and second electrically conductive surfaces separated by an insulator;
electrically connecting the second electrically conductive surface of a tapered finger with the first electrically conductive surface of an adjacent tapered finger, these second and first electrically conductive surfaces facing each other and being on opposing sides of an intervening pin of the plurality of n pins;
electrically coupling each of the facing second and first electrically conductive surfaces to circuitry proximate the tapered fingers; and
electrically coupling the circuitry to test equipment.

5,701,087
PRESCALER IC TEST METHOD CAPABLE OF EXECUTING ALTERNATE CURRENT TEST BY THE USE OF IC TESTER FOR DIRECT CURRENT TEST
Isamu Takano, Tokyo, Japan, assignor to NEC Corporation, Tokyo, Japan
Filed Aug. 30, 1995, Ser. No. 520,783
Claims priority, application Japan, Sep. 2, 1994, 6-209808
Int. Cl.^{6} G01R *31/26*
U.S. Cl. 324—765 **7 Claims**

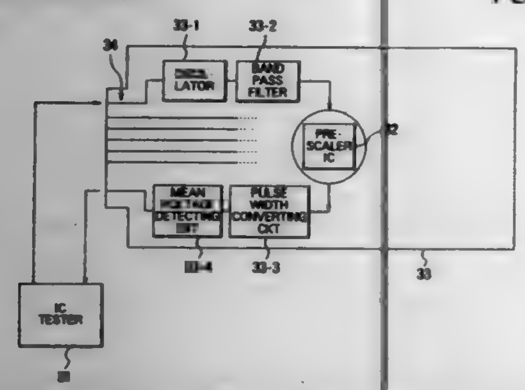

1. A prescaler IC test method for testing a prescaler IC with an IC tester and a probe card for performing a frequency dividing operation on reception of a frequency signal from said IC tester and producing a frequency divided signal, said IC tester supplying a direct current control signal to said probe card on a start of said test, said probe card delivering a test result to said IC tester as a result of said test, said test comprising the steps of:
generating, by said IC tester, said frequency signal;
supplying, by said probe card, said frequency signal to said prescaler IC on reception of said direct current control signal, said prescaler IC producing said frequency divided signal;
converting, by said probe card, said frequency divided signal into a test signal having a signal width and a signal level;
detecting by said probe card, a first mean value of the signal level of said test signal; and
supplying by said probe card, said first mean value to said IC tester in the form of a direct current signal for allowing said IC tester to carry out said test.

5,701,088
METHOD OF EVALUATING A MIS-TYPE SEMICONDUCTOR DEVICE
Nobuyoshi Fujimaki, Annaka, Japan, assignor to Shin-Etsu Handotai Co., Ltd, Tokyo, Japan
Filed Sep. 27, 1995, Ser. No. 534,460
Claims priority, application Japan, Sep. 30, 1994, 6-261094
Int. Cl.^{6} G01R *31/00;* **H01L** *21/00*
U.S. Cl. 324—765 **8 Claims**

1. A method of evaluating a MIS-type semiconductor device which comprises an insulative layer(s) and a conductive layer(s)

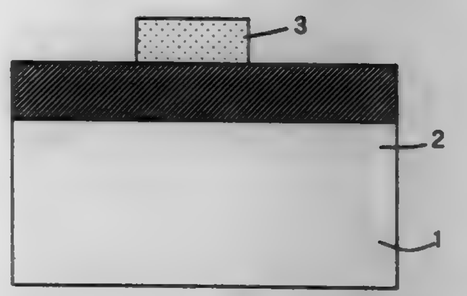

formed one after another on a semiconductor substrate wherein: using a sample with an interface trapped charge density of 1×10^{10}/cm^2-eV or less and a mobile ionic charge density of 3×10^{10}/cm^2 or less in said insulative layer; said MIS-type semiconductor device is treated by applying a positive or negative voltage in a range of 1–5 MV/cm between said semiconductor substrate and said conductive layer at a temperature of 100°–300° C. and maintaining this voltage for 1–60 minutes (hereafter referred to as "BT treatment"); before and after said BT treatment, a capacitance-voltage characteristic (hereafter referred to as "C-V characteristic") of said MIS-type semiconductor device is measured at room temperature; and a carrier trap density of said insulation is determined based on a shift of a flat band voltage of said C-V characteristics from before to after said BT treatment.

5,701,089
ALTERNATOR/STARTER TESTING DEVICE
Clifton G. Perkins, Memphis, Tenn., assignor to Autozone, Inc., Memphis, Tenn.
Filed Oct. 12, 1995, Ser. No. 542,455
Int. Cl.^{6} G01R *31/34*
U.S. Cl. 324—772 **13 Claims**

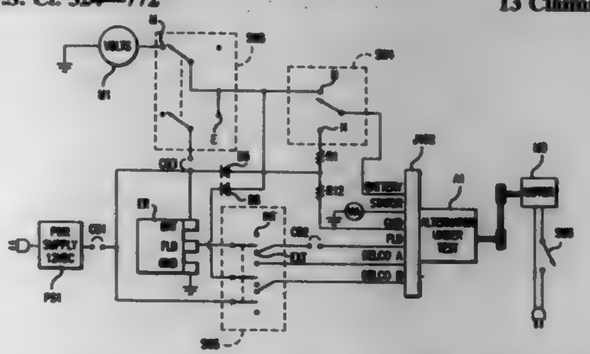

9. A device for testing an alternator which has been removed from an automobile, comprising:
a motor adapted to be temporarily coupled to the alternator for rotating an armature of the alternator as part of a test;
a test coupling jack, adapted to be electrically connected to a corresponding connector on the alternator, the test coupling jack comprising a battery line connector and a ground line connector, each line connector for connecting to a corresponding circuit in the alternator;
a power supply for simulating an automobile battery voltage, an output thereof coupled to the battery line connector;
a meter coupled to the battery line connector for displaying a voltage generated by the alternator in response to the test; and
a switch, coupled to the meter and to the power supply, for temporarily connecting the power supply to the battery line connector and simultaneously disconnecting the meter from the battery line connector.

5,701,090
DATA OUTPUT CIRCUIT WITH REDUCED OUTPUT NOISE
Hideto Hidaka, and Masakazu Hirose, both of Hyogo, Japan, assignors to Mitsubishi Denki Kabushiki Kaisha, Tokyo, Japan
Filed Nov. 15, 1995, Ser. No. 559,746
Claims priority, application Japan, Nov. 15, 1994, 6-280958
Int. Cl.^{6} H03K *19/0948*
U.S. Cl. 326—32 **3 Claims**

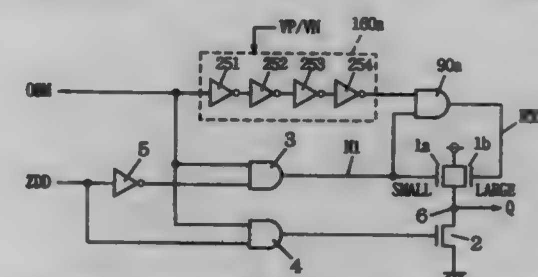

1. A data output circuit for providing a signal of a logic level corresponding to a logic level of an input signal applied to an input node to an output node, comprising:
a first drive element responsive to said input signal for driving said output node to a potential level corresponding to the logic level of saint input node at a first rate,
delay means for delaying said input signal,
a second drive element responsive to an output of said delay means for driving said output node to the potential level corresponding to the logic level of said input signal at a second rate faster than said first rate, and
adjustment means for adjusting the length of a delay time provided to said input signal by said delay means according to at least one of operating power supply voltage and operating temperature.

5,701,091
ROUTING RESOURCES FOR HIERARCHICAL FPGA
Thomas A. Kean, Edinburgh, Scotland, assignor to Xilinx, Inc., San Jose, Calif.
Filed Jun. 6, 1995, Ser. No. 482,339
Claims priority, application United Kingdom, May 2, 1995, S.N.9508931.4; May 2, 1995, S.N.9508933.0
Int. Cl.^{6} H03K *19/177*
U.S. Cl. 326—41 **2 Claims**

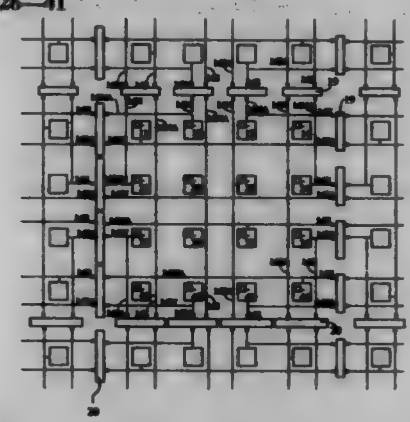

1. A programmable logic device comprising:
a plurality of cells arranged in an array in said programmable logic device;
a plurality of routing lines, said routing lines extending in north-south or east-west directions;
a plurality of switches grouping said cells into a plurality of blocks of cells;
at least one multiplexer in each of said cells which takes inputs from a plurality of signals coming into said cell and provides an output signal, the output signals from multiplexers in one of said blocks being connected to at least one of said switches, the choice of which switch being determined by the position of said cell in its block;
each of said cells within said one of said blocks being connected to at least one switch via a wire, said wire being connected to no other of said cells in said one of said blocks.

5,701,092
OR ARRAY ARCHITECTURE FOR A PROGRAMMABLE LOGIC DEVICE
Norman P. Taffe, San Jose; Stephen M. Douglass, Saratoga, and Hagop Nazarian, San Jose, all of Calif., assignors to Cypress Semiconductor Corp., San Jose, Calif.
Continuation of Ser. No. 144,663, Oct. 28, 1993, Pat. No. 5,467,029. This application Jul. 28, 1995, Ser. No. 508,779
Int. Cl.^{6} H03K *19/173*
U.S. Cl. 326—41 **15 Claims**

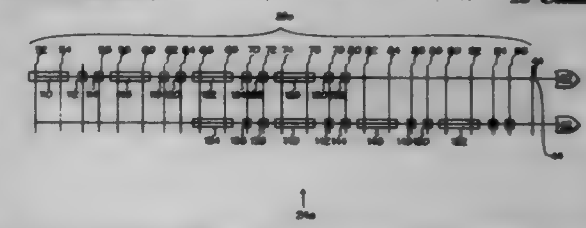

1. An array providing an ORing function in a programmable logic device comprising:
a) a first programmable element coupled to a first product term signal;
b) a second independent programmable element coupled to a second product term signal;
c) a third programmable element coupled to the second product term signal;
d) a first device providing an ORing function and coupled to the first programmable element and the second programmable element; and
e) a second device providing an ORing function and coupled to the third programmable element, said second device not capable of being coupled to the first programmable element.

5,701,093
ADIABATIC MOS LOGIC AND POWER SUPPLYING METHOD AND APPARATUS
Seigo Suzuki, Tokyo, Japan, assignor to Kabushiki Kaisha Toshiba, Kawasaki, Japan
Filed Mar. 15, 1996, Ser. No. 616,811
Claims priority, application Japan, Mar. 15, 1995, P07-055913; Mar. 14, 1996, P08-057913
Int. Cl.^{6} H03K *17/16*
U.S. Cl. 326—98 **22 Claims**

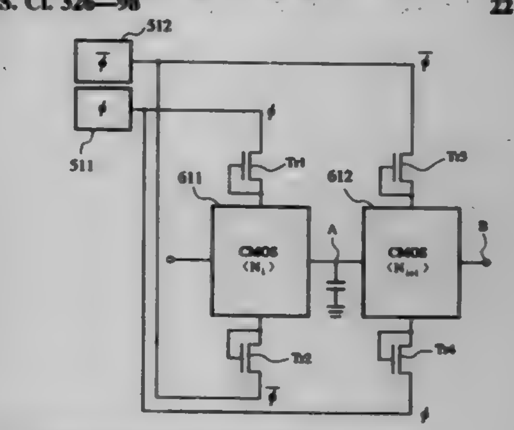

1. A MOS gate circuit comprising:

a) a first internal circuit having first internal circuit elements each made of a MOS transistor, and a first and a second power supply terminals for connecting a source voltage to the first internal circuit elements;
b) a first cutoff means having a first end connected to the first power supply terminal;
c) a second cutoff means having a first end connected to the second power supply terminal;
d) a first AC power source having a first phase and connected to a second end of the first cutoff means; and
e) a second AC power source having a second phase and connected to a second end of the second cutoff means,
the alternating speed of the first and second AC power sources being slower than the operation speed of the first internal circuit elements,
the first and second phases being opposite to each other, and the first internal circuit elements being conductive only when the first phase is at high potential.

5,701,094
LOGIC CIRCUITS FOR WAVE PIPELINING
Ramalingam Sridhar, East Amherst, N.Y., and Xuguang Zhang, Tustin, Calif., assignors to Research Foundation of State University of New York, Amherst, N.Y.
Division of Ser. No. 307,932, Sep. 16, 1994, Pat. No. 5,528,177. This application Mar. 22, 1996, Ser. No. 620,466
Int. Cl.⁶ H03K *19/003*
U.S. Cl. 326—113 **13 Claims**

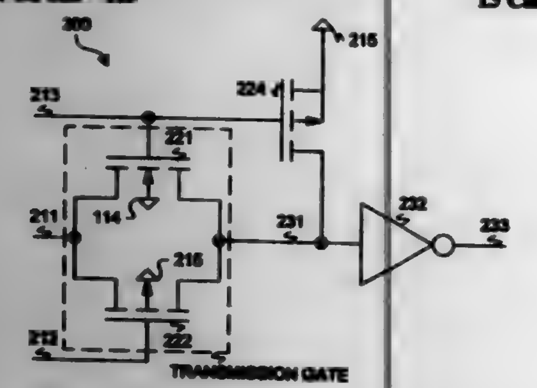

1. A logic circuit comprising:
a first dual-rail input that receives a first dual-rail input logic signal;
a second dual-rail input that receives a second dual-rail input logic signal;
combinatorial logic, coupled to the first and second dual-rail inputs, that generates a logical combination of said first and second input logic signals; and
driver circuitry coupled to said combinatorial logic, said driver circuitry providing an amplified first output signal and an amplified second output signal that is a logical complement of said first output signal; and
wherein each one of a plurality of paths to said first output signal and said second output signal from said first input signal and said second input signal have substantially equal delays.

5,701,095
HIGH SPEED, LOW NOISE CMOS MULTIPLEXER WITH PRECHARGE
Takashi Ohsawa, Yokohama, Japan, assignor to Kabushiki Kaisha Toshiba, Kawasaki, Japan
Continuation of Ser. No. 393,076, Feb. 23, 1995, abandoned. This application Dec. 10, 1996, Ser. No. 763,836
Claims priority, application Japan, Feb. 25, 1994, 6-028593
Int. Cl.⁶ H03K *19/0948*
U.S. Cl. 327—410 **44 Claims**

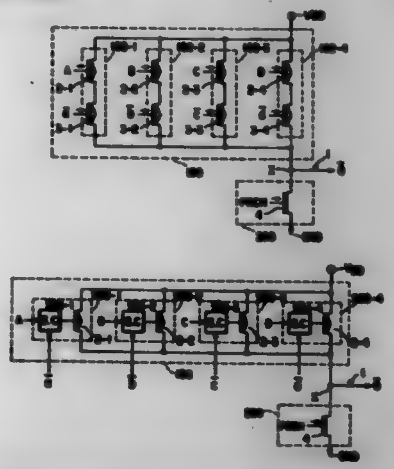

1. A semiconductor integrated circuit device comprising:
a first power supply terminal;
a second power supply terminal;
a data selecting circuit connected to said first power supply terminal and having at least first and second data transmission circuits, said first data transmission circuit receiving a first selecting signal and a first input data signal, and said second data transmission circuit receiving a second selecting signal and a second input data signal, wherein, during an active period of said semiconductor integrated circuit device in which said first data transmission circuit is selected by the first selecting signal, an initial potential level transition of the first selecting signal begins before an initial potential level transition of the first input data signal, and wherein, during an active period of said semiconductor integrated circuit device in which said second data transmission circuit is selected by the second selecting signal, an initial potential level transition of the second selecting signal begins before an initial potential level transition of the second input data signal;
a precharge circuit, connected to said second power supply terminal, for receiving a precharge signal; and
a wiring line connected to a common node between said data selecting circuit and said precharge circuit.

5,701,096
CHARGE-PUMP TYPE BOOSTER CIRCUIT
Mitsuhiro Higashiho, Kasugai, Japan, assignor to Fujitsu Limited, Kawasaki, Japan
Filed Aug. 30, 1995, Ser. No. 521,439
Claims priority, application Japan, Dec. 9, 1994, 6-306485
Int. Cl.⁶ G05F *1/10*
U.S. Cl. 327—536 **33 Claims**

1. A charge-pump type booster circuit comprising:
a first capacitor for boosting an output voltage;
a power source applying unit for applying a first power supply voltage to an output terminal of said first capacitor;
a transfer gate for transferring the boosted output voltage;
a second capacitor for boosting a gate voltage of said transfer gate;
a switching unit for controlling an input voltage of said second capacitor; and
a precharge circuit for applying a specific high voltage to a control terminal of said transfer gate, wherein said precharge circuit comprises:

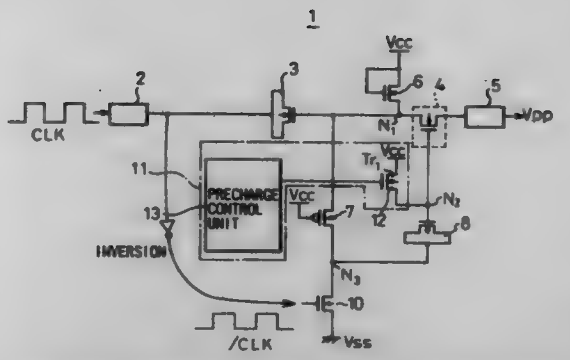

a precharge transistor connected between a specific high voltage line and the control terminal of said transfer gate; and
a precharge control unit for controlling a switching operation of said precharge transistor, a power source voltage of said precharge control unit being the boosted output voltage of said charge-pump type booster circuit.

5,701,097
STATISTICALLY BASED CURRENT GENERATOR CIRCUIT
Gregory J. Fisher, Indialantic, and Chong I. Chi, Palm Bay, both of Fla., assignors to Harris Corporation, Melbourne, Fla.
Filed Aug. 15, 1995, Ser. No. 515,435
Int. Cl.⁶ H03K *17/14*
U.S. Cl. 327—538 **25 Claims**

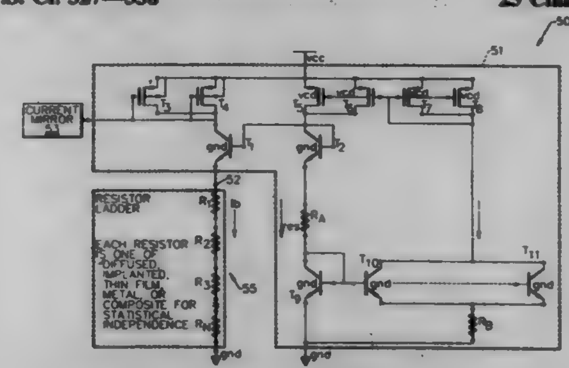

1. A monolithic current generator comprising:
a voltage reference circuit having an output voltage; and
a resistor ladder electrically connected to said voltage reference circuit such that the output voltage is applied across said resistor ladder for compensating for process variations thereby producing an output current, said resistor ladder having a plurality of n statistically independent resistors electrically connected in series, said plurality of n statistically independent resistors having respective as-manufactured resistance values varied from respective target resistance mean values so that the as-manufactured resistance value for one resistor is generally independent of the as-manufactured resistance value for each other resistor, each of the n statistically independent resistors being selected according to:

$$\frac{\sigma_T}{r_T}=\sqrt{\sum_{i=1}^{n}\left(\frac{1}{x_i}\right)^2\left(\frac{\sigma_i}{r_i}\right)^2}$$

where r_T= total target resistance mean value of the resistor ladder;
σ_T= standard deviation of the total as-manufactured resistance value of the resistor ladder;
x_i= a number greater than one which represents the target resistance mean value of each statistically independent resistor, ri, as some fraction of the total target resistance mean value;
σ_i=standard deviation of the as-manufactured resistance value of the ith statistically independent resistor, r_i, in the resistor ladder; and
where the target mean resistance value of each statistically independent resistor, $r_i=r_T/x_i$.

5,701,098
AC BYPASS CIRCUIT WHICH PROVIDES STABILIZATION OF HIGH FREQUENCY TRANSIENT NOISE
Pak-Ho Yeung, San Jose, Calif., assignor to National Semiconductor Corporation, Santa Clara, Calif.
Filed Dec. 21, 1995, Ser. No. 576,739
Int. Cl.⁶ H03K *17/16*
U.S. Cl. 327—538 **3 Claims**

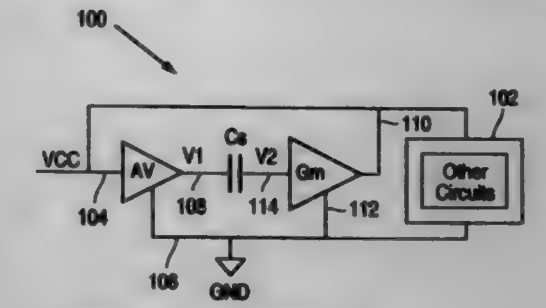

1. An integrated circuit, comprising:
electronic circuitry elements;
first and second, internal power supply lines for transmitting first and second supply voltages to provide power for the circuitry elements;
bypass circuitry including:
transconductance circuitry, characterized by a variable conductivity, the transconductance having a first flow electrode coupled to the first supply line, a second flow electrode coupled to the second supply line, and a control electrode for controlling current flow between the flow electrodes, the conductivity of the transconductance circuitry varying in response to a voltage difference between the control electrode and the second flow electrode;
voltage amplifier circuitry having a first input terminal coupled to the first supply line and a second input terminal coupled to the second supply line, the voltage amplifier circuitry amplifying a voltage difference between the first supply line and the second supply line, the voltage amplifier circuitry further having an output terminal at which the amplified voltage difference is provided; and
capacitive coupling circuitry that couples the output terminal of the voltage amplifier circuitry to the control electrode of the transconductance circuitry,
wherein the first flow electrode of the transconductance circuitry is coupled to the first input terminal of the voltage amplifier circuitry.

5,701,099
TRANSCONDUCTOR-C FILTER ELEMENT WITH COARSE AND FINE ADJUSTMENT
Haim Shafir, Sacramento, Calif., assignor to Level One Communications, Inc., Sacramento, Calif.
Filed Nov. 27, 1995, Ser. No. 562,690
Int. Cl.⁶ H03K *5/00;* **G06F** *15/31*
U.S. Cl. 327—552 **21 Claims**

1. A transconductor-C element, comprising:
a common mode voltage controller for providing a controlled common mode voltage;

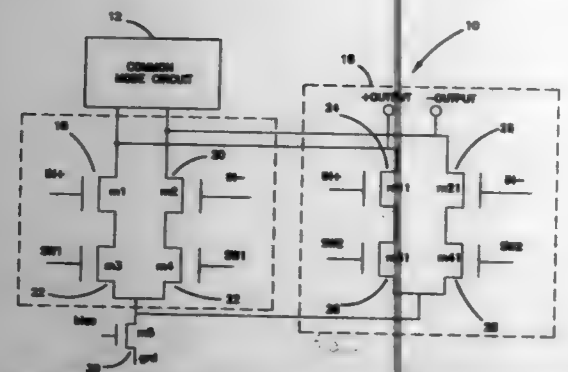

a first amplifier, coupled to the common mode voltage controller, for amplifying an input signal with large dynamic range into a higher voltage output signal using the controlled common mode voltage;

a second amplifier, coupled to the common mode voltage controller for amplifying said input signal of rapidly changing frequency into the higher voltage output signal using the controlled common mode voltage; and

a coarse control circuit, coupled to the first amplifier and the second amplifier, for selectively commencing operations of the second amplifier and the first amplifier, wherein the first amplifier is selected to dampen the input signal when the input signal has high current swings in order to produce the higher voltage output having current swings of a smaller amplitude, the second amplifier is selected to dampen the input signal when the input signal has high frequency oscillations in order to produce the higher voltage output signal having oscillations of a lower frequency, and both the first amplifier and the second amplifier are selected simultaneously to dampen the input signal when the input signal has both high current swings and high frequency oscillations in order to produce the higher voltage output signal having smaller amplitude current swings and lower frequency oscillations.

5,701,100

SECOND-ORDER HIGHPASS DIFFERENCE FILTER

Chien-Ping Wu, and Chang-Da Tsai, both of Taipei, Taiwan, assignors to National Science Council, Taipei, Taiwan

Filed Sep. 10, 1996, Ser. No. 709,867

Int. Cl.⁶ H03K *5/00;* H03B *1/04*

U.S. Cl. 327—559 **2 Claims**

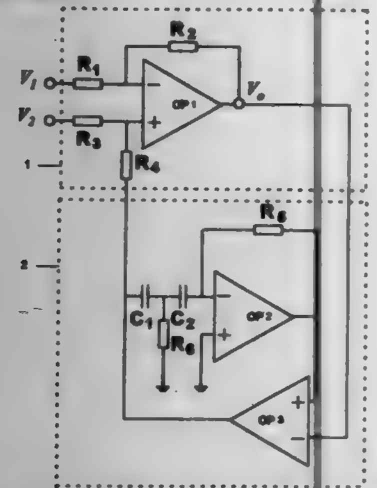

1. A second-order highpass difference filter comprising a difference amplifier and a feedback processing circuit,

said difference amplifier comprising an operational amplifier OP_1, and four resistors R_1, R_2, R_3 and R_4, wherein $R_2/R_1=R_4/R_3$, the resistors R_1 and R_3 are connected to the inverting terminal (–) and the noninverting terminal (+) of the operational amplifier OP_1, respectively, so that an input voltage V_1 is be fed to the inverting terminal (–) of the operational amplifier OP_1 via the resistor R_1 and another input voltage V_2 is be fed to the noninverting terminal (+) of the operational amplifier OP_1 via the resistor R_3, and the output terminal of the operational amplifier OP_1 is connected the inverting terminal (–) of the operational amplifier OP_1 with the resistor R_2; and

said feedback processing circuit comprising two operational amplifiers OP_2 and OP_3, two resistors R_5 and R_6, and two capacitors C_1 and C_2 which are connected with each other in series with a conductive wire, wherein the inverting terminal (–) and the noninverting terminal (+) of the operational amplifier OP_3 are connected to the output terminals of the operational amplifier OP_1 and of the operational amplifier OP_2, respectively, the output terminal of the operational amplifier OP_2 is also connected to the inverting terminal (–) of the operational amplifier OP_2 with the resistor R_5, and the noninverting (+) terminal of the operational amplifier OP_2 is grounded, the output terminal of the operational amplifier OP_3 is connected to the inverting terminal of the operational amplifier OP_2 via the two capacitors C_1 and C_2 in series and to the noninverting terminal of the operational amplifier OP_1 via the resistor R_4, wherein one terminal of the resistor R_6 is connected to the conductive wire and another terminal thereof is grounded.

5,701,101

CHARGE AMPLIFIER FOR BLAST GAUGES

Robert Weinhardt; Allen J. Lindfors, both of Ridgecrest, Calif., and James L. Rieger, deceased, late of Ridgecrest, Calif., by Kent N. Birch, executor, assignors to The United States of America as Represented by the Secretary of the Navy, Washington, D.C.

Filed Mar. 20, 1995, Ser. No. 407,460

Int. Cl.⁶ G06G *7/12*

U.S. Cl. 327—561 **7 Claims**

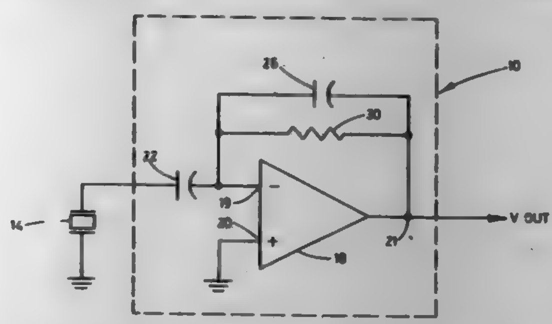

6. A circuit for generating an output voltage having a desired proportionality to a variable charge, the circuit comprising:

a transducer developing the charge and having a ground terminal and an opposite terminal;

an input capacitor having a first terminal and an opposite second terminal;

a transmission line directly connecting said opposite terminal of the transducer to said first terminal, said transmission line having a capacitance to ground;

a operational amplifier having an input terminal and having an output terminal of the circuit, said input terminal being directly connected to said second terminal of said input capacitor;

a feedback capacitor directly connected between said input terminal and said output terminal; and

a resistor connected in parallel with said feedback capacitor between said input terminal and said output terminal,

wherein:

said input capacitor has a capacitance much greater than said capacitance to ground;

said feedback capacitor has a capacitance equal to the product of the capacitance of said input capacitor and the desired proportionality of said variable charge to said output voltage; and

said resistor has a resistance selected to remove DC voltage from said output terminal,

so that the circuit provides said desired output voltage at said output terminal.

5,701,102

HIGH-SPEED TRANSMISSION LINE RECEIVER WITH WIDE RANGE OF COMMON MODE COMPENSATION

James R. Kuo, Cupertino, Calif., assignor to National Semiconductor Corporation, Santa Clara, Calif.

Filed Nov. 29, 1995, Ser. No. 567,359

Int. Cl.⁶ H03F *3/45*

U.S. Cl. 330—253 **20 Claims**

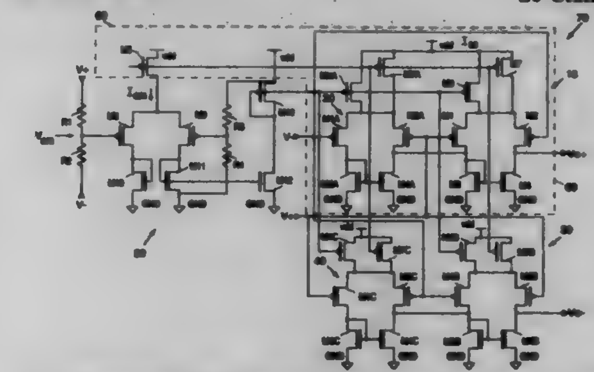

17. A common mode compensation circuit for adjusting the magnitude of a tail current in response to the magnitude of a common mode voltage, said common mode compensation circuit comprising:

first and second conduction paths connected in parallel;

a current source for supplying a current to said first and second conduction paths;

a first current-splitting transistor connected in said first conduction path, an input terminal for said common mode voltage being connected to a control electrode of said first current-splitting transistor;

a second current-splitting transistor and a first current mirror transistor connected in said second conduction path, an output terminal being connected to a control electrode of said first current mirror transistor.

5,701,103

AMPLIFYING CIRCUIT WITH DC VOLTAGE FEEDBACK TO BASE TERMINAL FOR MAGNETIC RECORD AND PLAYBACK APPARATUS

Toshikazu Fujii, Kanagawa, Japan, assignor to Kabushiki Kaisha Toshiba, Kanagawa-ken, Japan

Continuation of Ser. No. 267,407, Jun. 29, 1994, abandoned. This application Jul. 10, 1996, Ser. No. 677,905

Claims priority, application Japan, Jun. 30, 1993, 5-162394

Int. Cl.⁶ H03F *1/30*

U.S. Cl. 330—290 **11 Claims**

1. A record amplifying circuit for a magnetic record apparatus, comprising:

a discrete transistor having a collector, an emitter, and a base;

a power supply connected to the emitter of said discrete transistor; and

a recording amplifying IC having a record output terminal, bias means, and DC feedback means, the record output terminal being connected to the collector of said discrete transistor, the bias means being connected to the base of said discrete transistor, the DC feedback means being connected to the record output terminal and the bias means, the DC feedback means detecting a DC voltage at the record output terminal

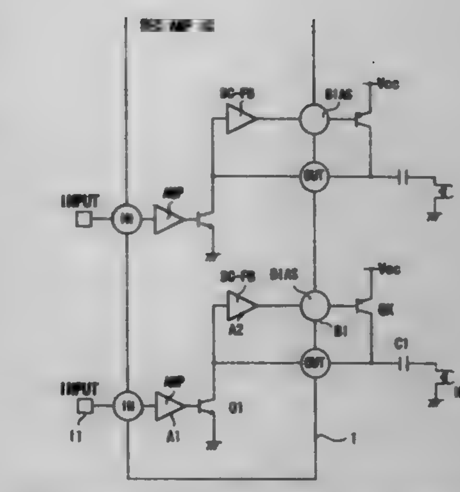

and adjusting the collector current of the discrete transistor such that the DC voltage of the record output terminal becomes a predetermined value.

5,701,104

RADIO-FREQUENCY OSCILLATOR OF PLANAR DESIGN

Patric Heide, München, Germany, assignor to Siemens Aktiengesellschaft, Munich, Germany

PCT No. PCT/DE95/00325, § 371 Date Sep. 23, 1996, § 102(e) Date Sep. 23, 1996, PCT Pub. No. WO95/26073, PCT Pub. Date Sep. 28, 1995

PCT Filed Mar. 8, 1995, Ser. No. 716,436

Claims priority, application Germany, Mar. 23, 1994, 44 10 025.6

Int. Cl.⁶ H03B *5/18*

U.S. Cl. 331—96 **22 Claims**

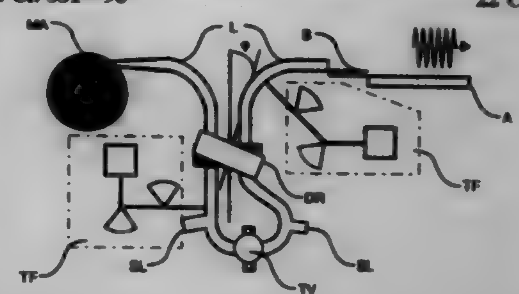

1. A radio-frequency oscillator of planar design, comprising:

an amplifier;

planar lines;

a substrate;

a dielectric resonator that is a frequency-determining element;

the amplifier connected to the dielectric resonator by at least one respective planar line of the planar lines arranged on the substrate;

the dielectric resonator having a cylindrical configuration; the dielectric resonator arranged standing on a curved surface thereof directly or indirectly on or in the substrate;

a normal vector of an end face of the dielectric resonator forming an angle in the range of 0° and 45° with the respective planar line; and

the dielectric resonator operating in a higher mode than a fundamental mode thereof.

5,701,105
TIMER OSCILLATION CIRCUIT WITH COMPARATOR CLOCK CONTROL SIGNAL SYNCHRONIZED WITH OSCILLATION SIGNAL

Soung Hwi Park, Kyungsangbook-Do, Rep. of Korea, assignor to LG Semicon Co., Ltd., Cheongju, Rep. of Korea
Continuation of Ser. No. 511,272, Aug. 4, 1995, abandoned. This application Jan. 31, 1997, Ser. No. 791,575
Int. Cl.^{6} H03K *3/023*
U.S. Cl. 331—153 **4 Claims**

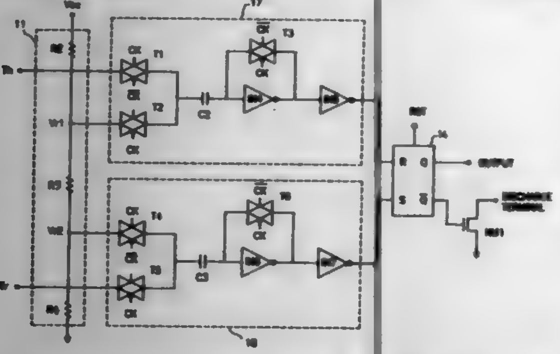

1. A timer oscillation circuit, wherein first and second voltage comparison means which compare a first voltage and a second voltage obtained by dividing an external voltage into a certain ratio with a voltage of a first capacitance which is charged and discharged in accordance with a signal outputted from a timer oscillator and wherein a set-reset latch means outputs an oscillating signal in accordance with an output signal of said first and second comparison means inputted thereto, comprising:

first voltage comparison means, controlled by a clock signal, for charging a first charged voltage on a second capacitance and for outputting a result obtained by comparing the first charged voltage on said second capacitance and the voltage from said first capacitance; and

second voltage comparison means, controlled by said clock signal, for charging a second charged voltage outputted from the first capacitance on a third capacitance and for outputting a result by comparing the second charged voltage and an electric potential of said second voltage wherein said oscillating signal is synchronized to said clock signal.

5,701,106
METHOD AND MODULATOR FOR MODULATING DIGITAL SIGNAL TO HIGHER FREQUENCY ANALOG SIGNAL

Juha Pikkarainen, and Veijo Koutas, both of Oulu, Finland, assignors to Nokia Mobile Phones Ltd., Salo, Finland
Filed Jun. 5, 1996, Ser. No. 658,619
Claims priority, application Finland, Jun. 6, 1995, 952775
Int. Cl.^{6} H04L *27/12;27/20*
U.S. Cl. 332—100 **16 Claims**

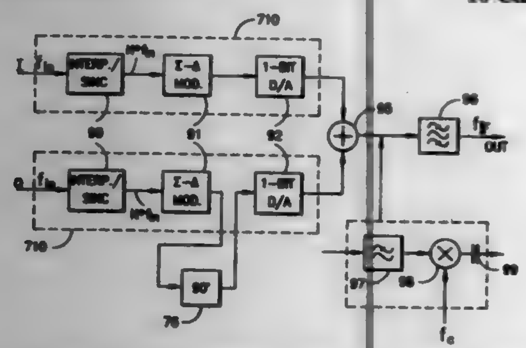

1. A method for modulating a digital signal to a higher-frequency analog signal, wherein a baseband digital signal (I, Q) is taken to a digital-to-analog converter (71, 710), in which said digital signal (I, Q) is sampled at a certain sampling frequency (f_{in}) and converted to an analog signal and wherein the digital-to-analog converter (71, 710) produces, as a result of the conversion, a baseband signal (f_{sig}) and signals (f_{Ni}) at multiples of the sampling frequency (f_{in}), characterized in that one of said signals (f_{Ni}) at multiples of the sampling frequency (f_{in}) is selected as the output signal (f_{IF}).

5,701,107
PHASE SHIFTER CIRCUIT USING FIELD EFFECT TRANSISTORS

Michiaki Kasahara; Hazime Kawano; Kazuyoshi Inami; Kohichi Muroi, and Yoshitada Iyama, all of Kamakura, Japan, assignors to Mitsubishi Denki Kabushiki Kaisha, Tokyo, Japan
Filed Mar. 13, 1996, Ser. No. 614,765
Claims priority, application Japan, Mar. 15, 1995, HEI 7-055854
Int. Cl.^{6} H01P *3/00*
U.S. Cl. 333—164 **29 Claims**

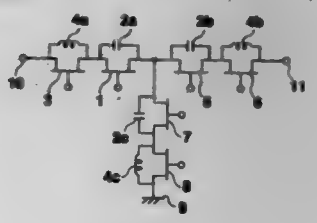

1: FIRST FET
2: CAPACITOR
3: SECOND FET
4: INDUCTOR
5: THIRD FET
6: FOURTH FET
7: FIFTH FET
8: SIXTH FET
9: GROUND

1. A phase shifter for shifting a phase of a signal entered through an input terminal and outputting the phase-shifted signal from an output terminal, the phase shifter comprising:

a first serial circuit with one end connected to the input terminal, said first serial circuit including a first FET, a second FET, and a first inductor connected across a drain electrode and a source electrode of said second FET;

a second serial circuit connected between an other end of said first serial circuit and the output terminal, said second serial circuit including a third FET, a fourth FET, and a second inductor connected across a drain electrode and a source electrode of said fourth FET, and

a third serial circuit connected between a ground and a node between the first and second serial circuits, said third serial circuit including a third circuit FET connected to said ground and a third circuit inductor connected across drain and source electrodes of said third circuit FET.

5,701,108
MAGNETOSTATIC WAVE DEVICE WITH A MAGNETIC FIELD APPLIED PARALLEL TO AN AXIS OF EASY MAGNETIZATION

Takashi Fujii, Ohtsu; Satoru Shinmura, Takatsuki; Masaru Fujino, Ohtsu; Shinobu Mizuno, Muko; Takenori Sekijima; Osamu Chikagawa, both of Nagaokakyo, and Hiroshi Takagi, Ohtsu, all of Japan, assignors to Murata Manufacturing Co., Ltd., Japan
Continuation of Ser. No. 284,151, Aug. 2, 1994, abandoned. This application May 16, 1996, Ser. No. 649,930
Claims priority, application Japan, Aug. 3, 1993, 5-229727
Int. Cl.^{6} H01P *1/215*
U.S. Cl. 333—202 **11 Claims**

1. A magnetostatic wave device of the kind wherein an external magnetic field is applied to a thin film of a magnetic single-crystal

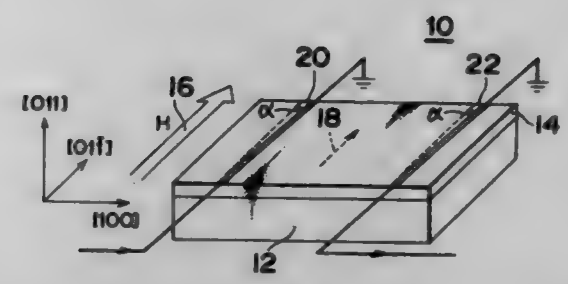

having a garnet structure in the direction parallel to a plane of said thin film, characterized in that said thin film of the magnetic single-crystal is formed so as to have an axis of easy magnetization, the direction of which is parallel to the direction of said externally applied magnetic field for providing stability in filtering characteristics.

5,701,109
CURRENT SENSING RELAY

Peder Ulrik Poulsen, Huntington Rd., Box 197, Stratford, Conn. 06497
Continuation-in-part of Ser. No. 348,405, Dec. 2, 1994, Pat. No. 5,525,948. This application Jun. 10, 1996, Ser. No. 661,216
Int. Cl.^{6} H01H *51/22*
U.S. Cl. 335—78 **3 Claims**

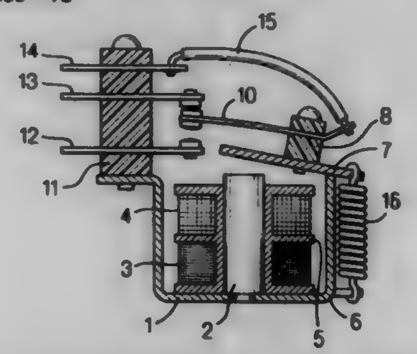

1. An electromagnetic relay, having ON and OFF states, for connecting a source of alternating electrical current to a load, said relay comprising:

(a) an armature movable between ON and OFF positions corresponding, respectively, to said ON and OFF states of said relay;

(b) a magnetic core surrounded by first windings forming a holding coil to magnetize said core when a first portion of alternating electrical current is passed through said holding coil and consequently to cause said armature to move from said OFF position to said ON position as a result of a magnetic attraction produced between said magnetic core and said armature, resulting in causing a second portion of alternating electrical current to flow through said load;

(c) said magnetic core additionally surrounded by second windings forming a load coil through which said second portion of said alternating electrical current flows when said armature is in said ON position, said load coil producing a magnetic field which counteracts a magnetic field produced by said holding coil; and

(d) parameters of said load coil being selected such that, when said second portion of said alternating electrical current reaches a predetermined level, a resulting loss in magnetic attraction between said armature and said magnetic core will cause said armature to be released, interrupting flow of said alternating electrical current through said holding coil, and causing said relay to switch from said ON state to said OFF state

---

5,701,110
CIRCUIT BREAKER ACCESSORY MODULE

Jerry Lynn Scheel, and Randy Luther Siebels, both of Cedar Rapids, Iowa, assignors to Square D Company, Palatine, Ill.
Filed Apr. 9, 1996, Ser. No. 629,657
Int. Cl.^{6} H01H *67/02*
U.S. Cl. 335—132 **21 Claims**

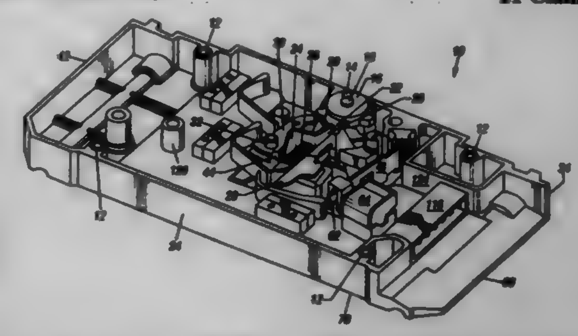

1. An accessory module for use with a circuit breaker having a first mechanical assembly, the accessory module comprising:

(a) a second mechanical assembly for engaging with the first mechanical assembly, wherein the second mechanical assembly has a position;

(b) a base for holding and enclosing the second mechanical assembly and for attaching to the circuit breaker;

(c) a first switch having a first status and a second status; and

(d) a first actuator associated with the second mechanical assembly for changing the status of the first switch.

5,701,111
ELECTRONIC TRIP UNIT CONVERSION KIT FOR HIGH AMPERE-RATED CIRCUIT BREAKERS

Roger N. Castonguay, Terryville, and Jeffrey D. Lord, Unionville, both of Conn., assignors to General Electric Company, New York, N.Y.
Filed Mar. 29, 1996, Ser. No. 626,200
Int. Cl.^{6} H01H *9/00*
U.S. Cl. 335—177 **13 Claims**

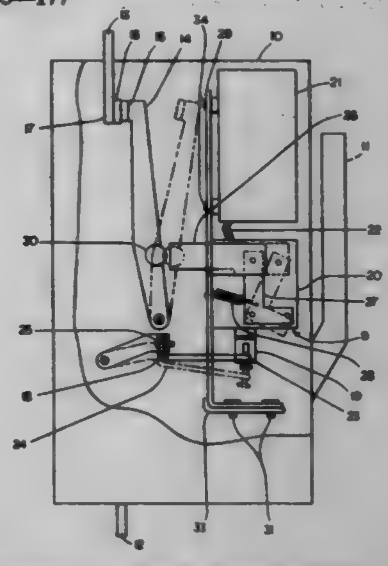

1. A trip unit conversion kit for circuit breakers comprising:

a trip actuator unit responsive to a trip initiating signal from a circuit breaker trip unit to articulate a circuit breaker operating mechanism and separate a pair of circuit breaker contacts, said trip actuator unit including a flux shift unit having a flux shift plunger;

a reset arm pivotally arranged on said trip actuator unit and connecting with said flux shift plunger;

a connector link attached to said reset arm at one end and arranged for interacting with a circuit breaker cross bar at an

opposite end, whereby said cross bar motivates said connector link and said reset arm upon separation of said circuit breaker contacts; and

a reset spring attached to said reset arm for returning said reset arm and said connector link to a home position, said reset spring connects with said connector link at one end of said return spring and connects with said support bracket at an opposite end of said return spring.

5,701,112
CRYOGENIC MRI MAGNETS
Daniel Edward Brown, Witney, England, assignor to Oxford Magnet Technology Limited, Oxford, England
Filed Nov. 13, 1995, Ser. No. 556,601
Claims priority, application United Kingdom, Nov. 29, 1994, [illegible]
Int. Cl.⁶ H01F *1/00*
U.S. Cl. 335—216 **9 Claims**

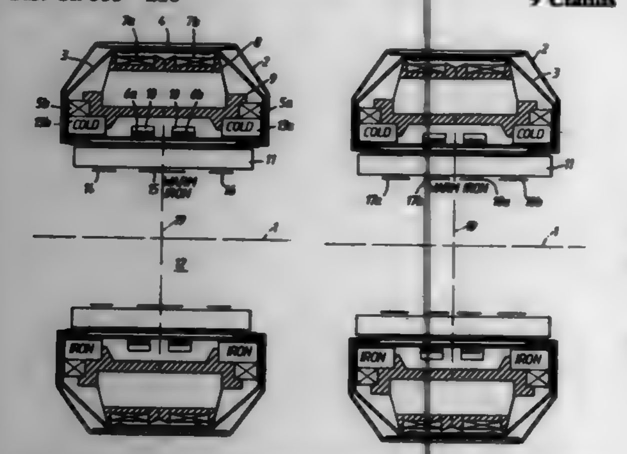

1. An electromagnet of the solenoid type for use in MRI apparatus, comprising:

an annular vessel having a coaxial cylindrical warm bore, annular windings for producing magnetic filed, and cold iron being mechanically anchored with said windings inside of said vessel; and

iron shim rings positioned inside of the coaxial cylindrical warm bore,

wherein the size and relative position of the shim rings being chosen so that instability of the magnetic filed introduced by one shim ring, due to vibration or temperature changes, is substantially compensated for by an equal and opposite effect produced by one or more other shim rings.

5,701,113
PASSIVE NON-CONTACTING CENTERING SYSTEM
Donald L. Edberg, Irvine, Calif., assignor to McDonnell Douglas Corporation, Huntington Beach, Calif.
Filed Feb. 28, 1996, Ser. No. 608,540
Int. Cl.⁶ H01F *7/20*
U.S. Cl. 335—285 **14 Claims**

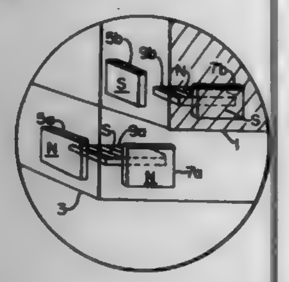

1. A passive, non-contacting centering system comprising:

a first structure, said first structure having eight corners and defining a first volume of rectangular shape;

a second structure, said second structure having eight corners and defining a second volume of rectangular shape;

said second structure being smaller in size than said first structure and said first structure receiving said second structure within said first volume such that the corners of said first structure are in general alignment with the corners of said second structure; and

means for maintaining said second structure within said first volume and in spaced relation to said first structure, said means for maintaining comprising:

first magnet means located adjacent each of said corners of said first structure for producing first magnetic fields; and

second magnet means located adjacent each of said corners of said second structure for producing second magnetic fields;

wherein said first and second magnetic fields produce a repelling force at each of said corners, said repelling force at each of said corners being sufficient in intensity to suspend said second structure entirely within said first volume in spaced relationship with said first structure such that said second structure does not contact said first structure.

5,701,114
ROTARY VARIABLE DIFFERENTIAL TRANSFORMERS
Jacob Chass, 70-25 Yellowstone Blvd., Forest Hills, N.Y. 11375
Filed Jul. 30, 1996, Ser. No. 689,032
Int. Cl.⁶ H01F *21/06*
U.S. Cl. 336—115 **19 Claims**

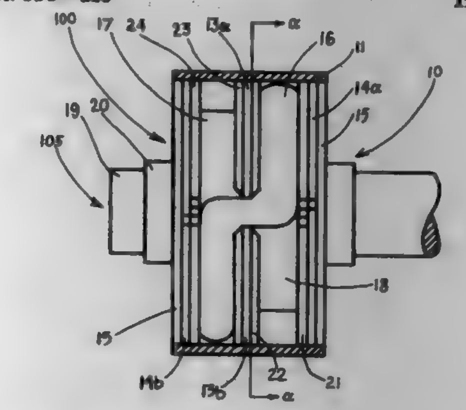

1. A Rotary Variable Differential Transformer comprised of: a housing, said housing including a shell and two washers; a hollow cylindrical coil form made of non magnetic material, said coil form rigidly disposed within said housing, axis of said coil form and axis of said shell substantially coincide; first and second secondary coils wound of elecrically conductive wire, circumferentially and adjacent to each other about said coil form; said first secondary and said second secondary coils are connected in series opposition relationship; a primary coil wound of electrically conductive wire circumferentially, adjacent to said first secondary coil about said coil form, from a first position to a second position; said primary coil cross over at said second position, substantially in a said axial direction, to third position adjacent to said second secondary coil and wound circumferentially adjacent to said second secondary coil about said coil form to fourth position and thereafter cross over, substantially in said axial direction, and join said primary coil at said first position to form a continuous said primary coil; an elongated ferromagnetic core rotatably supported within said hollow coil form, said ferromagnetic core being symmetric with respect to said axis; said ferromagnetic core provides, upon rotation, a variable magnetic coupling between said primary coil and said first secondary coil, and between said primary coil and said second secondary coil.

5,701,115
FIELD PROGRAMMABLE MODULE PERSONALITIES
Robert W. Right, Huntington, Conn.; Hilario S. Costa, Sarasota, and John P. Hewlin, Bradenton, both of Fla., assignors to General Signal Corporation, Stamford, Conn.
Filed May 16, 1995, Ser. No. 441,792
Int. Cl.⁶ G08B *26/00*
U.S. Cl. 340—286.05 **8 Claims**

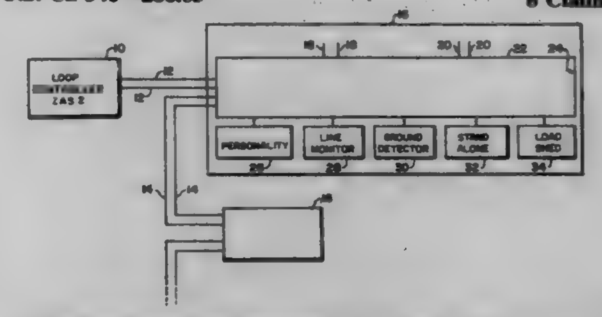

1. An alarm system for detecting and warning of the presence of various conditions by means of transponders located in a plurality of zones comprising:

a loop controller having a plurality of supply lines extending to said transponders;

a module, within each of said transponders, connected to said plurality of supply lines, said module being capable of initiating communication of the condition in its respective zone to said loop controller; and

means for variably determining specific different personalities of said module such that said module functions selectively in a variety of specific ways, wherein said means for variably determining includes means for selectively storing specific configuration data in said module to establish said respective specific personalities until such time as a new personality is selected;

a plurality of device containing circuits coupled to said module; and

means, responsive to the storage of specific configuration data, for selecting respective modes of operation for said circuits.

5,701,116
BUFFERED TRAILER LIGHT CONVERTER
Eric Hoekstra, Coopersville, Mich., assignor to Mascotech, Inc., Taylor, Mich.
Filed Sep. 27, 1994, Ser. No. 313,499
Int. Cl.⁶ G08B *21/00*
U.S. Cl. 340—431 **4 Claims**

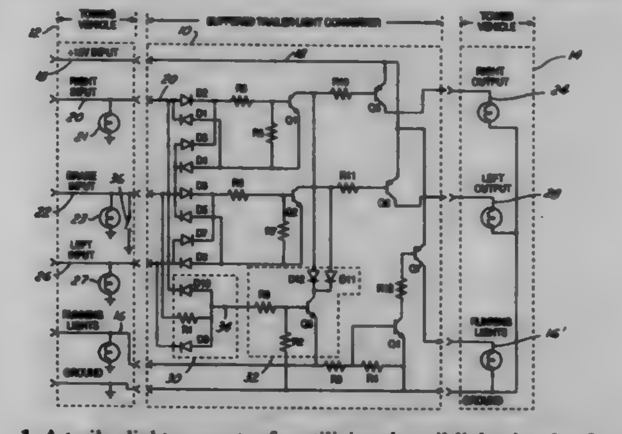

1. A trailer light converter for utilizing the tail light signals of a towing vehicle to control the left and right tail lights of a towed vehicle, said towing vehicle of the type having a right tail light signal, a left tail light signal, and a brake tail light signal and an emergency flasher mode of operation and a brake mode of operation, said converter, comprising:

means including a resistor and two diodes for sensing the simultaneous activation of said emergency flasher mode and said brake mode,

electronic logic circuit means, including a darlington transistor coupled to said sensing means, for generating one, and only one, output signal in response to, and only in response to, said simultaneous activation of said emergency flasher mode and said brake mode,

means, coupled to said generating means, for activating said left and right tail lights of said towed vehicle in a manner consistent with the brake tail light signal of the towing vehicle in response to said output signal of said generating means.

5,701,117
OCCUPANCY DETECTOR
Brian Page Platner, 100 Trailwood Dr., Guilford, Conn. 06437, and Philip Howland Mudge, Brookfield, Conn., assignors to Brian Page Platner, Guilford, Conn.
Filed Jan. 18, 1996, Ser. No. 588,576
Int. Cl.⁶ G08B *13/18*
U.S. Cl. 340—567 **21 Claims**

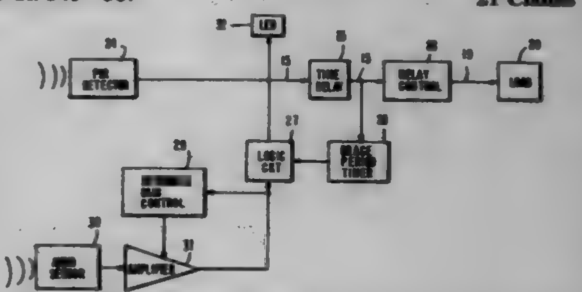

1. An apparatus for regulating the on/off status of an electrical device comprising:

a first sensing means including a passive infrared sensor that is operable to generate an electronic signal indicating the presence of a person within a defined area;

a second sensing means including a sound sensor that is operable to generate an electronic signal indicating the presence of sound phenomena within the defined area;

a control means operatively associated with a timer wherein the control means is in electronic communication with the first and second sensing means and the electrical device, and wherein the control means is operable to maintain the electrical device in an on state when the control means receives from the first sensing means a signal indicating the presence of a person within the defined area, or when the control means receives from the second sensing means a signal above a threshold level indicating the presence of sound phenomena within the defined area, wherein:

a) the control means is operable to initiate an off state of the electrical device when, throughout a first predetermined time interval, the first sensing means does not generate a signal indicating the presence of a person in the defined area and the second sensing means does not generate a signal above the threshold level indicating the presence of sound phenomena within the defined area;

b) the control means is operable to reinitiate the on state of the electrical device if it receives from the second sensing means a signal above the threshold level indicating the presence of sound phenomena within the defined area during a second predetermined time interval following the initiation of the off state of the electrical device; and

c) the control means is operable to reinitiate the on state of the electrical device only by receipt of a signal from the first sensing means indicating the presence of a person within the defined area if a signal from the second sensing means above the threshold level is not received by the control means during the second predetermined time interval following the initiation of the off state of the electrical device.

5,701,118

BLOWN FUSE INDICATOR CIRCUIT AND FUSE CAP, INCLUDING A METHOD OF USE THEREFORE

Harold L. Hall, 401 Canyon Way #43, Sparks, Nev. 89434; Galen J. May, and John J. May, both of 2245 Cielo Vista Dr., Reno, Nev. 89436

Filed Feb. 20, 1996, Ser. No. 603,544

Int. Cl.^{6} G08B *21/00*

U.S. Cl. 340—638 5 Claims

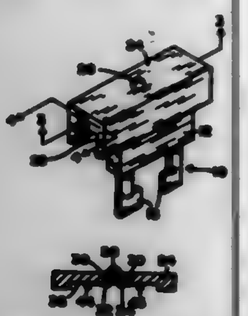

1. A blown fuse indicator cap which is removably attachable to a pre-existing plug-in type fuse housing, said cap comprising; a cap housing which is of a shape and size to removably capture and mate with said plug-in type fuse housing, an indicator light having a first and a second lead extending therefrom, and said cap housing having means for receiving and retaining said first and said second lead there through.

5,701,119

LINED BEARING WITH WEAR SENSOR

Mark I. Jurras, III, Canton Center, Conn., assignor to The Torrington Company, Torrington, Conn.

Continuation of Ser. No. 509,306, Jul. 31, 1995, abandoned. This application Jan. 13, 1997, Ser. No. 782,375

Int. Cl.^{6} G08B *21/00*

U.S. Cl. 340—682 15 Claims

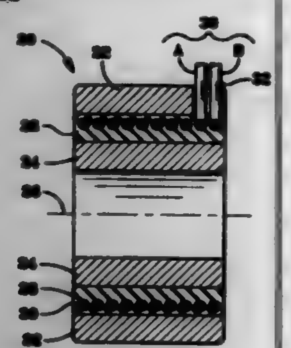

1. A lined bearing comprising:

an inner bearing ring having an axis;

an outer bearing ring concentric with the inner bearing ring and providing an annular space therebetween;

one of the inner bearing ring and the outer bearing ring being stationary and the other of the inner bearing ring and the outer bearing ring being rotatable about the axis;

a bearing liner within the annular space and fixed to the stationary bearing ring; and

a pair of electrical conductors embedded in the bearing liner, coiled in at least one loop encircling the inner bearing ring, each of the electrical conductors being electrically isolated and located such that wear of the bearing liner will cause the rotatable bearing ring to contact and electrically connect the electrical conductors.

5,701,120

PARTITIONED POINT-TO-POINT COMMUNICATIONS NETWORKS

Roberto Perelman, Sunnyvale, and Chris Yuan, Fremont, both of Calif., assignors to Siemens Business Communication Systems, Inc., Santa Clara, Calif.

Continuation of Ser. No. 985,476, Dec. 13, 1992, abandoned. This application Jun. 1, 1995, Ser. No. 457,450

Int. Cl.^{6} H04J *3/08*

U.S. Cl. 340—825.02 26 Claims

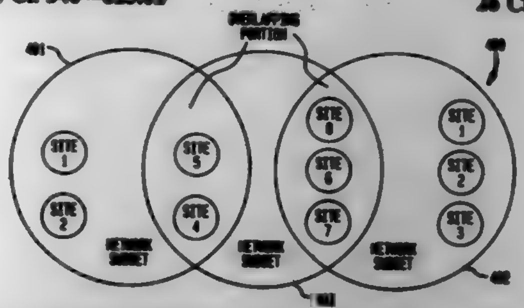

1. A method for attaching a new set of sites to a fully connected point-to-point communications network having a predetermined maximum number of sites associated therewith, wherein at least one site in said new set of sites does not need to communicate with every site in said fully connected point-to-point communications network, comprising the steps of:

(a) partitioning said fully-connected network into a plurality of subsets of said sites comprising said fully-connected network, wherein the sites comprising each said partitioned subset form a fully connected subnetwork and further wherein at least one overlapping portion of at least two of said partitioned subsets is formed, each said overlapping portion being comprised of sites that are in at least two of said fully connected subnetworks;

(b) combining the sites in said new set of sites with the sites in at least one of said partitioned subsets;

(c) identifying the sites included in each said overlapping portion; and

(d) upgrading a set of communications parameters for each site that is in one of said overlapping portions, said parameters defining an ability for intercommunication among a plurality of sites, whereby point-to-point communications is enabled between each said overlap site and all other sites that are in said at least two of said fully connected subnetworks which include said overlap portion.

5,701,121

TRANSDUCER AND INTERROGATOR DEVICE

Graham Alexander M. Murdoch, Perth, Australia, assignor to Uniscan Ltd., and Magellan Technology Pty. Ltd.

Continuation of Ser. No. 849,641, Mar. 6, 1992, abandoned, which is a continuation of Ser. No. 459,763, Jan. 12, 1990, abandoned. This application Dec. 12, 1994, Ser. No. 356,782

Claims priority, application Australia, Apr. 11, 1988, PI7683

Int. Cl.^{6} G08C *19/00*

U.S. Cl. 340—825.54 39 Claims

1. A passive actuator device for supplying power to an external device in response to an impinging magnetic powering field, comprising:

an inductive coil adapted to receive a magnetic powering field transmitted from an interrogator, said coil providing an induced powering signal when in the presence of the magnetic field,

a first portion of said powering signal supplying power to said actuator device,

a plurality of output terminals for connection to the external device, and

a circuit operable upon being energized by the first portion of the powering signal to provide selectively a further portion of

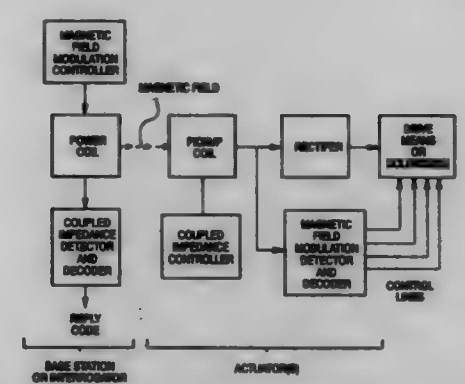

said powering signal as supply power to at least one of said output terminals to thereby supply power to the external device.

5,701,122

ELECTRONIC CURB FEELER

Thomas Canedy, 317 D. 26th St., Ft. Eustis, Va. 23604

Filed Oct. 4, 1996, Ser. No. 726,201

Int. Cl.^{6} B60Q *1/48;* G08G *1/14*

U.S. Cl. 340—932.2 2 Claims

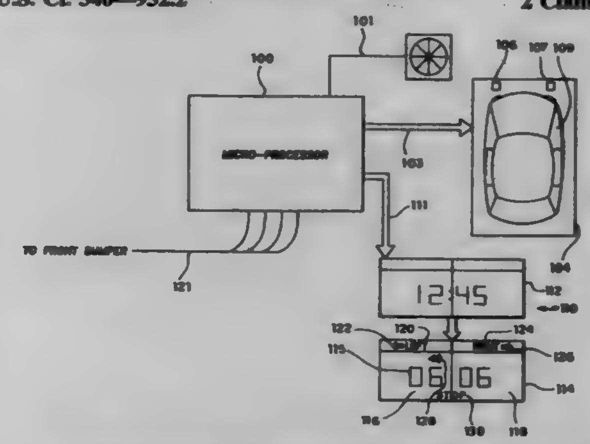

1. An electronic curb feeler system for detecting a solid object within a predetermined distance from a front end of a vehicle having a right and left side, said electronic curb feeler system comprising:

a right front pair of optical sensor units located on said front end of said vehicle in proximity to said right side thereof;

a left front pair of optical sensor units located on said front end of said vehicle in proximity to said left side thereof;

a microprocessor having connections to said right front and said left front pairs of optical sensor units for detecting the distance of a solid object within a first predetermined range thereof;

each said right front pair of optical sensing units and said left front pair of optical sensing units includes an optical transmitter for emitting light at a predetermined frequency and an optical detector for detecting a light at said predetermined frequency incident thereon, wherein said detector outputs a signal to said microprocessor indicative of the amount of light at said predetermined frequency incident on said optical detector;

an audible warning unit for generating an audible warning signal which can be heard by an operator of said vehicle;

a first visual display having a first and second light indicator; and

a second visual display having a first numeric display and a second numeric display,

wherein said microprocessor controls said first and second visual display to indicate the location and distance of a solid object in the proximity of said front end of said vehicle once said object is within said first predetermined range of said front end,

said microprocessor also controlling said audible warning unit to generate a first audible warning signal for a predetermined amount of time after said solid object is first detected within a second predetermined range of said front end, and

said microprocessor further controls said audible warning unit to generate a second audible warning signal and said second visual display to generate a visual warning signal when said solid object is detected within a third predetermined range of said front end.

5,701,123

CIRCULAR TACTILE KEYPAD

Thomas Samulewicz, 1311 Polo Run Dr., Yardley, Pa. 19067

Division of Ser. No. 285,431, Aug. 4, 1994, Pat. No. 5,479,163. This application Sep. 26, 1995, Ser. No. 534,245

Int. Cl.^{6} H03K *17/94*

U.S. Cl. 341—22 14 Claims

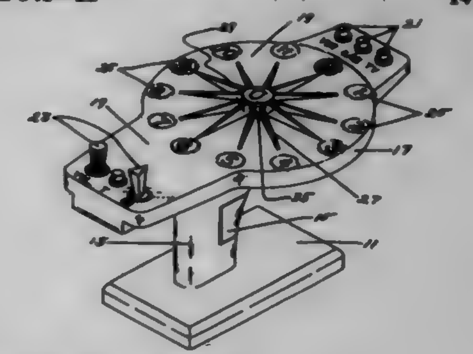

1. A digital keypad, comprising:

a controller for signalling an electrical device;

a keypad on said controller; and

a plurality of manually-operated key switches on a face of said keypad said switches including switches marked with indicia 1–9, located about the circumference of a circle in clock-face arrangement, being radially spaced 30-degrees apart, and having the indicia "6" at the bottom of said circle.

5,701,124

1-BIT SIGNAL PROCESSING APPARATUS CAPABLE OF AMPLITUDE MODULATION AND RECORDING OR REPRODUCING APPARATUS HAVING LOADED THEREON THE SIGNAL PROCESSING APPARATUS

Gen Ichimura, Tokyo, and Masayoshi Noguchi, Chiba, both of Japan, assignors to Sony Corporation, Tokyo, Japan

Filed Mar. 25, 1996, Ser. No. 622,291

Claims priority, application Japan, Mar. 31, 1995, PO 7-075367 U

Int. Cl.^{6} H03M *3/02*

U.S. Cl. 341—50 15 Claims

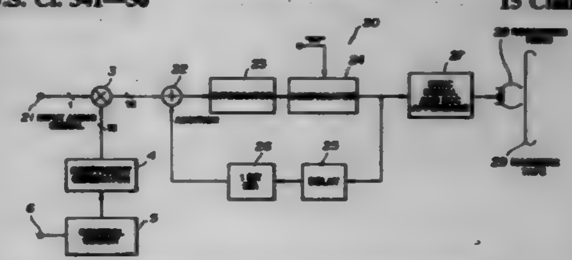

1. A digital signal processing apparatus comprising:

coefficient generating means for generating a multi-bit coefficient signal in response to an actuation by a user;

processing means for performing a pre-set processing operation upon a bit-based input digital signal and said multi-bit coefficient signal generated by said coefficient generating means; and

conversion means for re-quantizing a multi-bit signal outputted by said processing means.

5,701,125
METHOD FOR COMPRESSION OF DATA USING SINGLE PASS LZSS AND RUN-LENGTH ENCODING
Gary J. Berlin, Beech Island, S.C., assignor to The United States of America as represented by the United States Department of Energy, Washington, D.C.
Filed Jun. 15, 1994, Ser. No. 261,225
Int. Cl.[6] H30M 7/46
U.S. Cl. 341—63 18 Claims

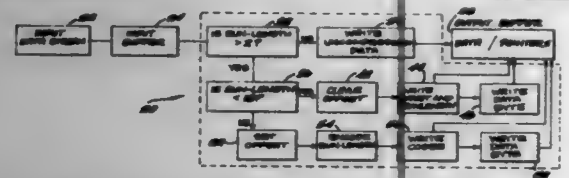

1. A method for compressing a series of data bytes being transferred from an input buffer to an output buffer, said series including a number of data bytes in a repeating string of data bytes, each byte in said string of data bytes being identical, said method comprising the steps of:
reading said series of data bytes into said input buffer;
determining said number of data bytes in said repeating string of data bytes;
comparing said number to a first reference number, and, if said number exceeds said first reference number,
dividing said string of repeating data bytes by a factor to determine a quotient and a remainder,
representing said number by a first code having a first part and a second part, said first part being said quotient and said second part being said remainder,
identifying said first code with a first offset where said first offset is one of a set offset and a cleared offset, and
writing said first offset, said first code, and said data byte to said output buffer; but, if said number does not exceed said first reference number,
comparing said number to a second reference number, and, if said number does not exceed said second reference number, writing said data byte to said output buffer.

5,701,126
HIGH SPEED VARIABLE LENGTH DECODER
Gyu-Seok Kim, Seoul, Rep. of Korea, assignor to Daewoo Electronics, Co., Ltd., Seoul, Rep. of Korea
Filed Nov. 17, 1995, Ser. No. 560,058
Claims priority, application Rep. of Korea, Nov. 17, 1994, 94-30172
Int. Cl.[6] H03M 7/40
U.S. Cl. 341—67 3 Claims

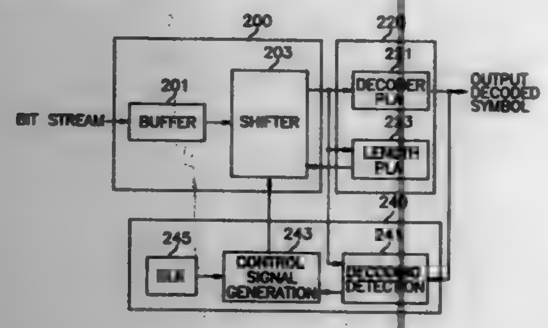

1. An apparatus for decoding variable length coded codewords, comprising:
interface means for storing a variable length coded serial input bit stream and outputting, in response to a control signal, in parallel an objective bit stream of a predetermined number of bits, the objective bit stream including a codeword;
means for decoding the codeword included in the objective bit stream and outputting a decoded symbol corresponding to the codeword; and
control means, storing a table having a plurality of entries, each of the entries including a codeword and its corresponding decoded symbol, for receiving the objective bit stream and the decoded symbol from the decoding means to thereby generate the control signal when the codeword in the objective bit stream and the decoded symbol from the decoding means match a codeword and a decoded symbol included in one of the entries, respectively.

5,701,127
AUTOMATIC VEHICLE IDENTIFICATION SYSTEM CAPABLE OF VEHICLE LANE DISCRIMINATION
Claude Andrew Sharpe, McKinney, Tex., assignor to Texas Instruments Incorporated, Dallas, Tex.
Filed Feb. 23, 1993, Ser. No. 21,123
Int. Cl.[6] G01S 13/76
U.S. Cl. 342—42 21 Claims

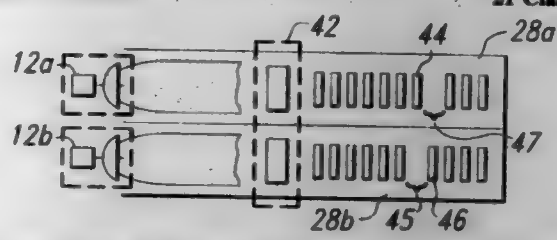

1. An automatic vehicle identification system capable of vehicle lane discrimination, the system comprising:
a) a first directional antenna focused on a first vehicle lane;
b) a first interrogator unit in electrical communication with said first directional antenna, said interrogator unit being operable to transmit a first downlink message to, and to receive a first uplink message from, said first directional antenna;
c) a second directional antenna focused on a second vehicle lane;
d) a second interrogator unit in electrical communication with said second directional antenna, said interrogator unit being operable to transmit a second downlink message to, and to receive a second uplink message from, said second directional antenna;
e) a remote transponder carried on a vehicle in one of said vehicle lanes, said transponder having a transponder antenna operable to receive RF transmissions and having a field strength comparator operable to receive signals from said transponder antenna and to compare a first field strength pulse received from said first directional antenna to a second field strength pulse received from said second directional antenna.

5,701,128
ANTENNA-INTEGRATED STRIP LINE CABLE
Takekazu Okada, Ishikawa-ken; Yuichi Maruyama, Nagaokakyo, and Kazuya Sayanagi, Osaka, all of Japan, assignors to Murata Manufacturing Co., Ltd., Japan
Filed Mar. 1, 1996, Ser. No. 609,497
Claims priority, application Japan, Mar. 3, 1995, 7-044495
Int. Cl.[6] H01Q 1/38;1/24
U.S. Cl. 343—700 MS 19 Claims

1. An antenna-integrated strip line cable comprising:

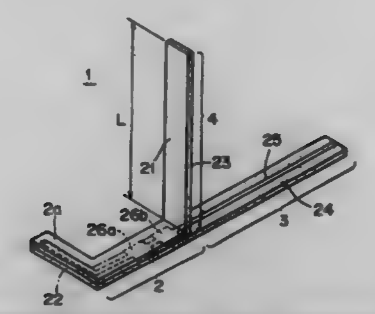

a transmission line part having upper and lower conductors disposed in parallel, a first insulator disposed between the two conductors and a first central conductor disposed inside the first insulator;
an antenna part having a second insulator extending from the first insulator and a second central conductor extending from the first central conductor and disposed on a surface of the second insulator; and
a counterpoise part extending from one of the upper and lower conductors, said counterpoise rising from the surface of the second insulator.

5,701,129
HELICAL ANTENNA WITH INTEGRAL J-SHAPED IMPEDANCE AND MOUNTING ELEMENT AND DUAL PART COVER
Toshifumi Itou, Umi-machi; Hiromitsu Shimazaki, Honami-machi; Masaaki Arita, Oonojou, and Shougo Horinouchi, Fukuoka, all of Japan, assignors to Matsushita Electric Industrial Co., Ltd., Osaka, Japan
Filed Feb. 22, 1995, Ser. No. 392,161
Claims priority, application Japan, Feb. 28, 1994, 6-029580
Int. Cl.[6] H01Q 1/40;11/08
U.S. Cl. 343—873 2 Claims

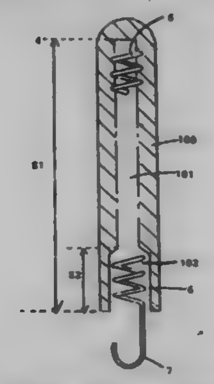

1. An antenna for a radio telephone comprising:
an antenna element having a helicoid part and a J-shaped hook part for mounting said antenna element to a radio telephone, said helicoid part and J-shaped hook part formed from an integral wire having a predetermined length; and
an armor having one portion covering and holding a part of said helicoid part to said armor, and another portion covering and accommodating another part of said helicoid part, said another part located between said hook part and a part of said helicoid part,
wherein said another part of said helicoid part is not held by said armor and remains flexible,
wherein said one portion of armor covering and holding a part of said helicoid part to said armor and said another portion of armor covering and accommodating another part of said helicoid part have a total length Z1,
wherein said another portion of armor covering and accommodating said another part of said helicoid part has a length Z2,
wherein the respective lengths of said armor satisfy the relationship of $0.08*Z1 \leqq Z2 \leqq 0.75*Z1$,
wherein the length of said J-shaped hook part determines an input impedance of said antenna element, and
wherein said J-shaped hook part forms an uncovered end of the antenna element for attachment to said radio telephone.

5,701,130
SELF PHASED ANTENNA ELEMENT WITH DIELECTRIC AND ASSOCIATED METHOD
Kevin Michael Thill, Kenosha, Wis., and Dwight David Walthers, McHenry, Ill., assignors to Motorola, Inc., Schaumburg, Ill.
Continuation of Ser. No. 414,155, Mar. 31, 1995, abandoned. This application Mar. 31, 1997, Ser. No. 840,437
Int. Cl.[6] H01Q 1/36
U.S. Cl. 343—895 14 Claims

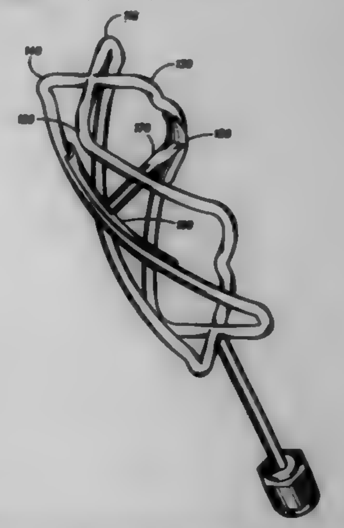

1. A self phased antenna element for transceiving a signal having a resonant frequency, said antenna element comprising:
a first conductive loop; and
a second conductive loop operatively connected at a feed point of excitation and disposed in a crossed relationship with the first loop, wherein a physical length around a perimeter of the first loop is essentially the same as a physical length around a perimeter of the second loop; and
a selective amount of dielectric material at a position adjacent to at least a portion of the first loop, wherein the amount of dielectric material is at a position adjacent to the first loop to cause at a resonant frequency an electrical length of the first conductive loop to be longer than an electrical length of the second conductive loop and a self phased relationship between the first conductive loop and the second conductive loop wherein phases of currents in the first conductive loop and the second conductive loop are spaced 90 degrees from one another.

5,701,131
DISPLAY APPARATUS
Kaeko Kuga, Kyoto, Japan, assignor to Rohm Co., Ltd., Kyoto, Japan
Filed Mar. 29, 1995, Ser. No. 413,862
Claims priority, application Japan, Mar. 30, 1994, 6-060414
Int. Cl.[6] G09G 5/00
U.S. Cl. 345—8 8 Claims

1. A display apparatus comprising:
a display panel which displays an image;

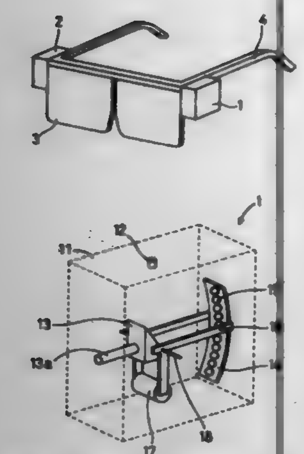

inclination detecting means for detecting an inclination of a panel surface of the display panel relative to a direction of gravity; and
image extracting means for extracting a data of a part of an image area from image data to display an image of the extracted data on the display panel, said image extracting means deciding a position in an upward and downward direction of the image area to be extracted, based on the inclination detected by the inclination detecting means,
wherein said inclination detecting means comprises:
a light emitting device;
a plurality of light receiving devices arranged in an array for receiving light from the light emitting device;
an optical device which reflects the light from the light emitting device toward the light receiving devices;
a fixed supporting member which integrally holds the display panel and the optical device;
a swingable supporting member which holds the light receiving devices, said swingable supporting member being swingable about the optical device along a direction of arrangement of the light receiving devices;
a weight fixed to the swingable supporting member for maintaining a direction of the swingable supporting member to be constant relative to the direction of gravity; and
an inclination sensor which detects an inclination of the fixed supporting member relative to the direction of gravity based on a position of the light receiving device receiving the light from the light emitting device.

5,701,132
VIRTUAL RETINAL DISPLAY WITH EXPANDED EXIT PUPIL
Joel S. Kollin, Seattle; Richard S. Johnston, and Charles D. Melville, both of Issaquah, all of Wash., assignors to University of Washington, Seattle, Wash.
Filed Mar. 29, 1996, Ser. No. 624,950
Int. Cl.⁶ G09G ***5/00***
U.S. Cl. 345—8 **21 Claims**

1. A retinal display apparatus for receiving an image data signal and scanning an image upon a viewer's eye, comprising:
a light source for generating light;
means for modulating the light as a function of the image data signal to define image content;
means for converging the light to a focal point;
means deflecting the light for moving the focal point, over time the moving focal point defining a curved intermediate image plane;
means upon which the light is incident for generating exit light from the incident light, the generating means being coincident with the curved intermediate image plane, the incident light spanning an incidence angle, the exit light spanning an angle greater than the incidence angle; and
an eyepiece receiving the exit light, the exit light defining an exit pupil beyond the eyepiece through which the image is scanned upon the viewer's eye; and
wherein by having the exit light span an angle greater than the incidence angle, the generating means expands the exit pupil.

5,701,133
CASCADED MULTIPLYING CURRENT MIRROR DRIVER FOR LED'S
Gabriel L. Miller, Westfield, and Eric R. Wagner, South Plainfield, both of N.J., assignors to Lucent Technologies Inc., Murray Hill, N.J.
Filed Oct. 13, 1994, Ser. No. 322,886
Int. Cl.⁶ G09G ***3/00***
U.S. Cl. 345—46 **9 Claims**

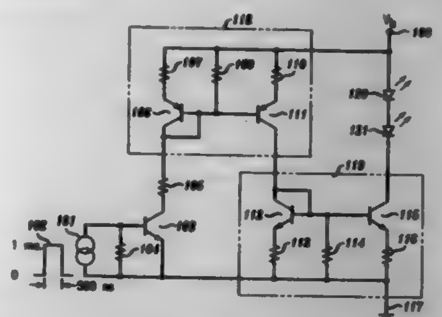

1. A circuit operable from a power supply for providing optical radiation in response to an input pulse, said circuit comprising first and second current mirrors each of which has an reference current input, an output, and a power input, means for generating a current at said reference current input of said first current mirror in response to said input pulse, means for connecting one terminal of said power supply to the power input of said first current mirror and the other terminal of said power supply to the power input of said second current mirror, means for coupling the current at the output of said first current mirror to the reference current input of said second current mirror, and light emitting means connected between said one terminal of said power supply and the output of said second current mirror; said first and second current mirrors each including first and second transistors each having emitter, base and collector electrodes; said first and second transistors of said first current mirror being of one conductivity type, and the first and second transistors of said second current mirror are of the opposite conductivity type.

5,701,134
PICTURE DISPLAY DEVICE WITH UNIFORMITY CORRECTION OF ELECTRON SUPPLY
Nicolaas Lambert, and Gerardus G. P. Van Gorkom, both of Eindhoven, Netherlands, assignors to U.S. Philips Corporation, New York, N.Y.
PCT No. PCT/IB94/00171, § 371 Date Feb. 16, 1995, § 102(e) Date Feb. 16, 1995, PCT Pub. No. WO95/01705, PCT Pub. Date Jan. 12, 1995
Continuation-in-part of Ser. No. 249,417, May 26, 1994, and Ser. No. 373,917, Jan. 17, 1995, Pat. No. 5,525,873, which is a continuation of Ser. No. 287,852, Aug. 8, 1994, which is a continuation of Ser. No. 990,700, Dec. 9, 1992, which is a continuation-in-part of Ser. No. 830,951, Feb. 6, 1992, Pat. No. 5,313,136, which is a continuation of Ser. No. 528,677, May 24, 1990, and a continuation-in-part of Ser. No. 53,900, Apr. 26, 1993, Pat. No. 5,347,199, which is a continuation of Ser. No. 954,949, Sep. 30, 1992, which is a continuation of Ser. No. 637,039, Jan. 3, 1991, which is a continuation-in-part of Ser. No. 528,677, May 24, 1990. This PCT application Jun. 23, 1994, Ser. No. 387,739
Claims priority, application Belgium, Jul. 1, 1993, 09300681
Int. Cl.⁶ H04N ***9/12***
U.S. Cl. 345—74 **10 Claims**

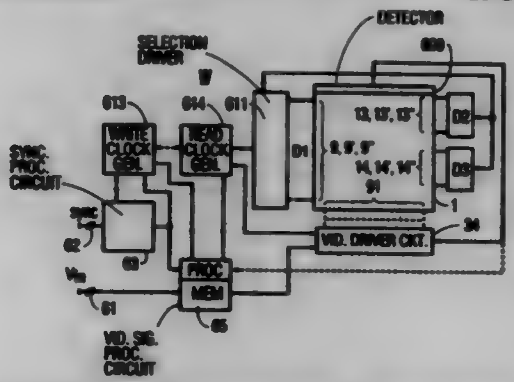

1. A picture display device comprising a video drive circuit for generating drive signals for driving a display unit, said display unit comprising a plurality of juxtaposed sources for emitting electrons, and a plurality of electron transport ducts cooperating with the sources for transporting the electrons, wherein the video drive circuit comprises a modulation circuit adapted to carry out a pulse-duration modulation of the drive signals and a pulse-height modulation of the drive signals in dependence upon respective first and second modulation signals, for controlling the supply of electrons from the sources to the electron transport ducts, and wherein said modulation signals comprise an applied video signal and a uniformity correction signal.

5,701,135
DISPLAY CONTROL METHOD AND APPARATUS
Shuntaro Aratani; Masaaki Ohshima, and Kazumi Suga, all of Tokyo, Japan, assignors to Canon Kabushiki Kaisha, Tokyo, Japan
Filed May 20, 1994, Ser. No. 246,724
Claims priority, application Japan, May 25, 1993, 5-122501; May 25, 1993, 5-122502
Int. Cl.⁶ H04N ***1/00***
U.S. Cl. 345—89 **23 Claims**

1. A display control apparatus to which image data is input, said display control apparatus comprising:
data storage means for storing the input image data;
division means for dividing the image data stored in said data storage means into a plurality of divided bands each having a predetermined plural number of lines;
scanning means for performing non-interlaced scanning of the image data within each of the divided bands, and for performing interlaced scanning of the image data in units of a band;

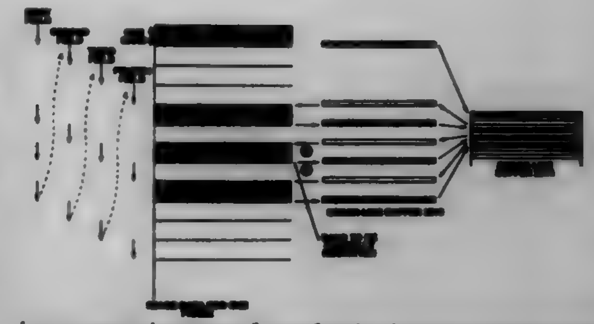

image processing means for performing image processing of the image data, scanned by said scanning means, in units of a divided band; and
transfer means for transferring data processed by said image processing means to a display device.

5,701,136
LIQUID CRYSTAL DISPLAY DRIVER WITH THRESHOLD VOLTAGE DRIFT COMPENSATION
Ruquiya Ismat Ara Huq, Plainsboro, and Andrew Gordon Francis Dingwall, Princeton, both of N.J., assignors to Thomson Consumer Electronics S.A., Courbevoie, France
Filed Mar. 6, 1995, Ser. No. 399,014
Int. Cl.⁶ G09G ***3/00***
U.S. Cl. 345—100 **11 Claims**

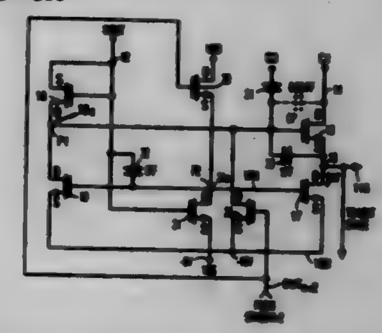

1. A shift register, comprising:
a source of a plurality of phase shifted clock signals;
a sensor for generating a threshold voltage indicative signal;
a plurality of cascaded stages, a given one of said cascaded stages, including:
a first transistor of a push-pull amplifier responsive to a first clock signal of said clock signals for generating an output pulse at an output of said given stage;
an input section responsive to an output pulse developed at an output of a second of said cascaded stages when a clock signal that is phase shifted with respect to said first clock signal occurs for generating a control signal at a control electrode of said first transistor, said control signal conditioning said first transistor to generate said output pulse of said given stage when an active level of said first clock signal occurs; and
a second transistor of said push-pull amplifier coupled to said output of said given stage for clamping said output to an inactive level of said output pulse, said second transistor being responsive to said threshold voltage indicative signal in a manner to compensate for a change in a threshold voltage of said second transistor.

5,701,137
METHOD FOR SEPARATING A HIERARCHICAL TREE CONTROL INTO ONE OR MORE HIERARCHICAL CHILD TREE CONTROLS IN A GRAPHICAL USER INTERFACE
Casey L. Kiernan, and Gavin Jancke, both of Redmond, Wash., assignors to Microsoft Corporation, Redmond, Wash.
Filed May 24, 1995, Ser. No. 448,830
Int. Cl.⁶ G06F *3/00*
U.S. Cl. 345—119 **24 Claims**

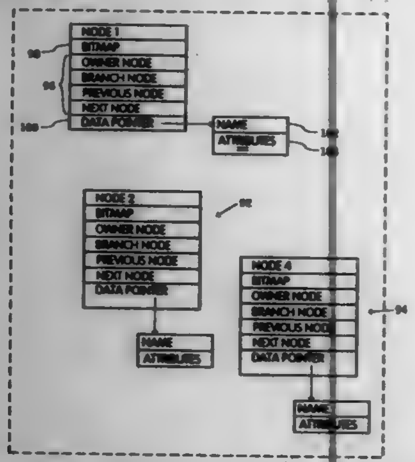

11. A method for interactively displaying a tree structure representing hierarchical data in a programmed computer system, the method comprising:
storing a master tree structure including hierarchy data and display state data;
displaying a hierarchical master tree control corresponding to the master tree structure in a first window;
in response to a user command to separate the hierarchical master tree control into a client tree control, creating a hierarchical client tree control from the display state data of the master tree structure;
displaying the client tree control in a second window; and
in response to user requests to expand and collapse a level of the hierarchical client tree control, expanding the level and collapsing the level, respectively, in the second window.

5,701,138
RESOLUTION INDEPENDENT METHODS FOR RENDERING A GRAPHIC IMAGE ON A DISPLAY DEVICE
Konstantin Othmer, San Jose, and Shannon Holland, Palo Alto, both of Calif., assignors to Apple Computer, Inc., Cupertino, Calif.
Continuation of Ser. No. 59,903, May 10, 1993, abandoned. This application Apr. 4, 1996, Ser. No. 626,903
Int. Cl.⁶ G09G *5/00*
U.S. Cl. 345—132 **9 Claims**

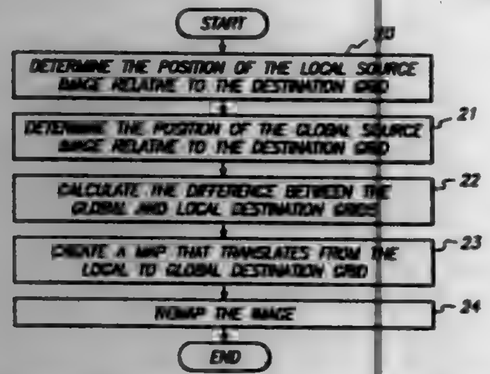

1. A computer implemented method for creating a destination region encompassing global space and local space device pixels for an image in source space to eliminate the effects of gridding, the method comprising the steps of:
determining differences in resolution between source space and device space;
determining a period at which a pixel pattern in device space repeats;
determining a relationship between an origin of a global device space and an origin of a local device space;
mapping the image from source space to device space using a local mapping for portions of the image defined in local coordinates and using a global mapping for portions of the image defined in global coordinates;
determining whether the origin of the local device space is positioned at a point with the same period as the origin of the global device space; and
selectively increasing a number of device pixels in the local device space and to which portions of the image defined in local coordinates are mapped if the origin of the local device space is not positioned at a point with the same period as the origin of the global device space.

5,701,139
SYSTEM FOR TRACKING AND REPLICATING THE OPERATION OF A CURSOR MANIPULATION DEVICE
David Weinbaum, Tel Aviv; Daniel Bar-On, Kiryat Ono, and Yoav Tamir, Ra'anana, all of Israel, assignors to Mercury Interactive Corporation, Los Altos Hills, Calif.
Division of Ser. No. 298,357, Aug. 30, 1994, Pat. No. 5,511,185, which is a continuation of Ser. No. 690,878, Apr. 23, 1991, abandoned, which is a continuation-in-part of Ser. No. 618,742, Nov. 27, 1990, abandoned. This application Jun. 6, 1995, Ser. No. 485,050
Int. Cl.⁶ G09G *5/08*
U.S. Cl. 345—145 **32 Claims**

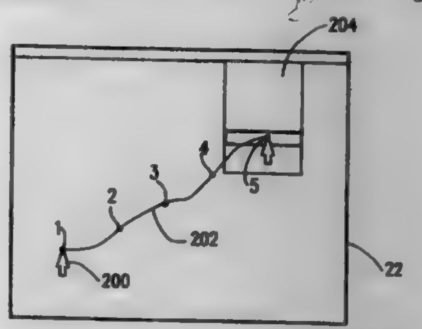

1. A system for tracking and replicating the operation of a cursor manipulation device in a computer system, the computer system comprising a monitor and a cursor manipulation device having an icon representing the location of a cursor on the monitor, the system for tracking and replicating comprising:
recording means for capturing a plurality of data points transmitted by said cursor manipulation device and a first multiplicity of events on said monitor, said datapoints and said events on said monitor occurring while said icon travels between a first location and a second location on said monitor, said recording means also being operative to identify said first and second locations; and
means for replicating the movement of the icon including:
means for replaying said data points;
means for identifying a third location of the icon on the screen as a result of the replay of said data points; and
means for causing said icon to move from said third location to said second location, if said third location is not generally identical to said second location.

5,701,140
METHOD AND APPARATUS FOR PROVIDING A CURSOR CONTROL INTERFACE WITH FORCE FEEDBACK
Louis B. Rosenberg, Pleasanton, and Bernard G. Jackson, Atherton, both of Calif., assignors to Immersion Human Interface Corp., San Jose, Calif.
PCT No. PCT/US94/07851, § 371 Date Feb. 16, 1996, § 102(e) Date Feb. 16, 1996, PCT Pub. No. WO95/02801, PCT Pub. Date Jan. 26, 1995
PCT Filed Jul. 12, 1994, Ser. No. 583,032
Int. Cl.⁶ G09G *3/33*
U.S. Cl. 345—156 **85 Claims**

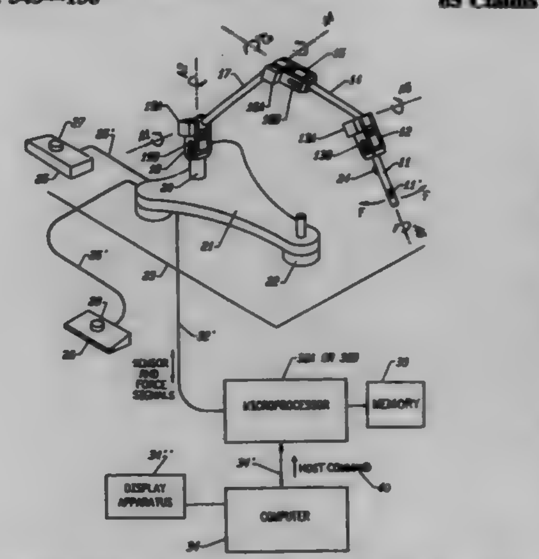

1. A human interface device for enabling manual interactions with application software running on a host computer, said software providing images displayed on a computer display, said device comprising:
(a) a user manipulatable physical object;
(b) a support mechanism which supports said user manipulatable physical object while allowing a plurality of degrees of freedom of said user manipulatable physical object with respect to a surface;
(c) a sensor apparatus coupled to at least one of said user manipulatable physical object and said support mechanism and that produces a locative signal responsive to and corresponding with the position of the user manipulatable physical object with respect to said surface at points in time during normal operation;
(d) a communication bus coupled to said host computer;
(e) a device microprocessor separate from said host computer and coupled to said host computer by said communication bus, said device microprocessor being coupled to said sensor apparatus, said device microprocessor running a program contained at least in part in a non-volatile memory coupled to said device microprocessor and separate from said host computer, said device microprocessor providing information for use by said host computer running an application program simultaneously with said microprocessor running said program, said information including a representation of said locative signal,
wherein said application program of said host computer can provide images on a computer display, said images updated on said computer display in response to said locative signal, and
wherein said host computer can provide host commands, said host commands being communicated to said device microprocessor by said communication bus, wherein said device microprocessor:
(i) monitors said communication bus for said host commands; and
(ii) decodes said host commands, wherein
at least one of said host commands causes information to be reported from said device microprocessor to said host computer, and
at least one of said host commands causes said device microprocessor to output control signals to cause a force to be imposed on said user manipulative physical object, said at least one host command and said force being correlated with at least one of said images developed by said host computer on said computer display; and
(f) a force generator controlled by said device microprocessor for providing a resistance force to motion of said user manipulatable physical object in response to at least one of said control signals.

5,701,141
DIGITIZER TABLET SYSTEM WITH DUAL-MODE CURSOR/MOUSE
Steven R. Schmenk, Scottsdale, and Donald A. Beauvais, Phoenix, both of Ariz., assignors to Calcomp, Inc., Anaheim, Calif.
Continuation of Ser. No. 993,973, Dec. 15, 1992, abandoned, which is a continuation of Ser. No. 869,101, Apr. 16, 1992, abandoned, which is a continuation of Ser. No. 432,073, Nov. 6, 1989, abandoned. This application Sep. 5, 1996, Ser. No. 708,905
Int. Cl.⁶ G09G *5/08*
U.S. Cl. 345—157 **10 Claims**

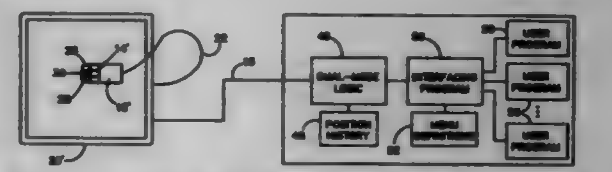

1. In a digitizing tablet system wherein the position on the surface of a tablet of a cursor device is sensed and signals reflecting the position of the cursor device are output to a computer connected thereto for use by a computer program running therein, and where the cursor device has at least two cursor selectors, the improvement to provide for user-controlled, dual-mode operation of the cursor device comprising:
a) position history table means for holding at least a last position of the cursor device;
b) mode selection means carried by the cursor device for manual activation by a user to select between first and second modes of operation of the cursor device on the tablet and for outputting a mode signal indicating a selection of one of said first and second modes of operation by a user, wherein said mode selection means is a first of the at least two cursor selectors and is dedicated to selecting between the first and second modes of operation; and,
c) dual-mode logic means disposed between the tablet and cursor device on one side and the computer program on another side for determining a present absolute location of the cursor device on the surface of the tablet and storing it in-said position history table means, for receiving said mode signal from said mode selection means, for supplying the computer program with said present absolute location of the cursor device on the surface of the tablet to indicate a positional location when said mode signal indicates that a first mode of operation has been selected by a user, and for supplying the computer program with both said present absolute location of the cursor device on the surface of the tablet and an indication of relative movement of the cursor device across the surface of the tablet by the user being the difference between said present location of the cursor device on the surface of the tablet and a next previous location of the cursor device on the surface that a second mode of operation has been selected by a user whereby a user can use said mode selection means to selectively control the use of the cursor device as an absolute position device or as a relative movement device.

5,701,142

POINTING STICK WITH TRIPOD ACTUATOR FOR CURSOR CONTROL IN A COMPUTER KEYBOARD

Daniel R. Brown, Colfax, Wash., and Patrick J. Franz, Portland, Oreg., assignors to Incontrol Solutions, Inc., Lake Oswego, Oreg.

Continuation-in-part of Ser. No. 410,348, Mar. 24, 1995, Pat. No. 5,568,987, which is a continuation of Ser. No. 275,946, Jul. 14, 1994, Pat. No. 5,407,285, which is a continuation-in-part of Ser. No. 104,777, Aug. 9, 1993, Pat. No. 5,541,622, which is a continuation of Ser. No. 96,485, Jul. 22, 1993, abandoned, which is a division of Ser. No. 557,546, Jul. 24, 1990, Pat. No. 5,231,386. This application Jun. 7, 1995, Ser. No. 480,163

Int. Cl.^{6} G09G *5/22*

U.S. Cl. 345—168 12 Claims

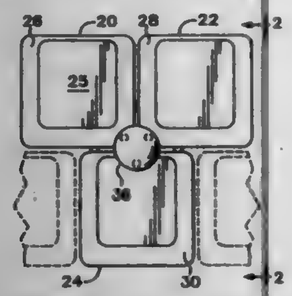

1. A pointing stick assembly for cursor control in a computer keyboard comprising:

at least a first keycap coupled to a first keyswitch for typing a first alphanumeric character into a computer;

at least one keycap aperture extending through the first keycap for receiving actuator legs;

a plurality of rigid actuator legs, sized and arranged so as to extend through said at least one key cap aperture and each actuator leg having a respective top end and a respective bottom end;

a pointing button for actuation by a user, the pointing button rigidly coupled to the top ends of said actuator legs such that the actuator legs depend below the pointing button in substantially parallel proximity to each other;

said at least one key cap aperture being sized so as to allow slight lateral motion of the actuator legs therein responsive to a force applied to the pointing button by a user for cursor control;

a force sensor for transducing the applied force to form a detectable electrical parameter; and;

an actuator rigidly coupled to the bottom ends of the legs and arranged for transmitting applied forces from the legs to the force sensor.

5,701,143

CIRCUITS, SYSTEMS AND METHODS FOR IMPROVING ROW SELECT SPEED IN A ROW SELECT MEMORY DEVICE

G. R. Mohan Rao, Dallas, Tex., assignor to Cirrus Logic, Inc., Fremont, Calif.

Filed Jan. 31, 1995, Ser. No. 381,189

Int. Cl.^{6} G11C *11/40*

U.S. Cl. 345—185 20 Claims

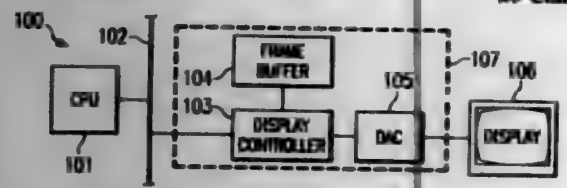

1. A memory device comprising:

an array of rows and columns of memory cells, each said row associated with a conductive wordline;

row decoder circuitry coupled to each said wordline for selecting a said row of cells for access; and

circuitry for providing a selected one of a plurality of supply voltages to said row decoder circuitry, said circuitry providing a first positive voltage during an active state of said decoder circuitry and providing a second positive voltage during an inactive state of said decoder circuitry.

5,701,144

HIGH-SPEED IMAGE REGISTER FOR GRAPHICS DISPLAY

Alex Tang, Hsin-Chu, Taiwan, assignor to United Microelectronics Corporation, Taiwan

Filed Apr. 27, 1995, Ser. No. 430,016

Int. Cl.^{6} G09G *5/36*

U.S. Cl. 345—188 10 Claims

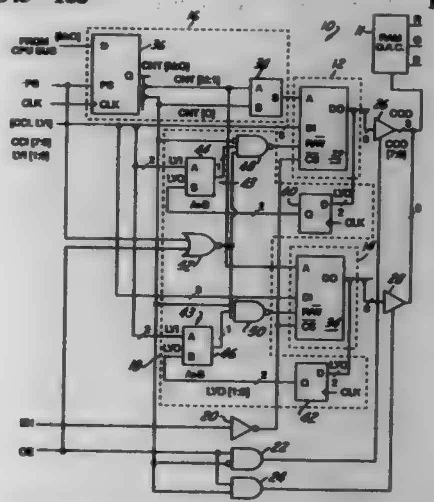

8. An image register for processing image data associated with a range of addresses including even addresses and odd addresses wherein said image data includes a layer code portion, comprising:

a first memory means for storing image data associated with said even addresses;

a second memory means for storing image data associated with said odd addresses;

address means for addressing said first and second memory means in accordance with an even state and an odd state of said register; and,

processing means coupled to said first and second memory means for simultaneously, during said even state, reading stored image data from said second memory means and selectively writing input image data into said first memory means according to a priority associated with said layer code portion of said input image data, and for simultaneously, during said odd state, reading stored image data from said first memory means and selectively writing said input image data into said second memory means according to the priority associated with said layer code portion of said input image data,

wherein stored image data associated with even and odd addresses are operated on in parallel to thereby improve processing speed,

wherein said processing means comprises first and second buffers respectively connected to said first and second memory means, said processing means further comprising first and second comparators each having a pair of inputs and an output, said layer code portion of said input image data being coupled to one input of each comparator, the other input of each comparator being connected to a respective output of said first and second buffers, said first and second comparator outputs being respectively coupled to said first and second memory means for controlling reading and writing operations.

5,701,145

INK JET RECORDING METHOD AND APPARATUS WITH CONTROL OF RETRACTING AND CAPPING RESPONSIVE TO AMOUNT RECORDING MEDIUM IS TO BE CONVEYED

Takayuki Ninomiya, Ichikawa, Japan, assignor to Canon Kabushiki Kaisha, Tokyo, Japan

Continuation of Ser. No. 41,891, Apr. 2, 1993, abandoned, which is a continuation of Ser. No. 711,989, Jun. 7, 1991, abandoned. This application Jun. 7, 1995, Ser. No. 483,972

Claims priority, application Japan, Jun. 12, 1990, 2-154683

Int. Cl.^{6} B41J *2/165*

U.S. Cl. 347—23 31 Claims

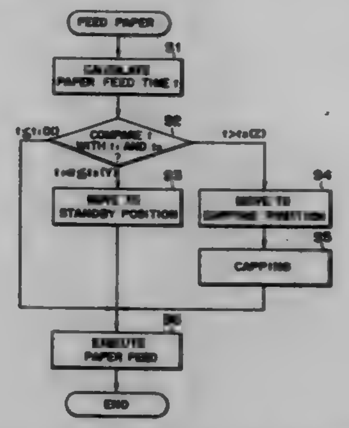

25. An ink jet recording method for use with recording means for recording by discharging ink onto a recording medium within a recording area, said method comprising the steps of:

conveying the recording medium;

discriminating an amount of conveyance the recording medium is to be conveyed relative to the recording means;

determining a time the recording medium is to be conveyed based on the discriminated amount of conveyance of the recording medium;

mounting the recording means on a carriage;

moving the carriage, on which the recording means is mounted;

capping the recording means at a capping position; and

controlling movement of the carriage such that said carriage will be moved to the capping position when the determined time period exceeds a predetermined time period.

5,701,146

INK HEAD RECOVERY METHOD AND APPARATUS

Yuji Akiyama; Hiromitsu Hirabayashi, both of Yokohama; Shigeyasu Nagoshi; Atsushi Arai, both of Kawasaki; Tetsuji Kurata, Yokohama; Hitoshi Sugimoto, Kawasaki, and Miyuki Matsubara, Tokyo, all of Japan, assignors to Canon Kabushiki Kaisha, Tokyo, Japan

Continuation of Ser. No. 961,651, Oct. 16, 1992, abandoned. This application Mar. 6, 1995, Ser. No. 399,996

Claims priority, application Japan, Oct. 18, 1991, 3-271027

Int. Cl.^{6} B41J *2/165;2/05*

U.S. Cl. 347—26 16 Claims

1. An ink jet recording apparatus which uses a recording head for discharging ink from a discharge opening by forming a bubble generated by applying thermal energy to a heat acting portion of said recording head, said apparatus comprising:

a capping member for capping the discharge opening;

control means for controlling a temperature of said recording head to become higher than a temperature at a normal ink discharge;

suction means for sucking ink from the discharge opening and from said capping member through said capping member, after temperature control by said control means; and

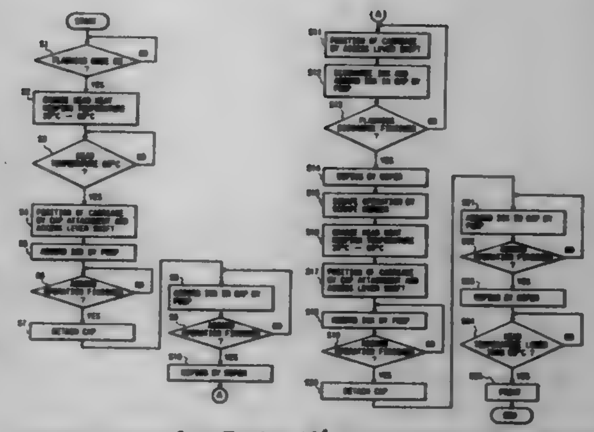

recovery means for effecting 10^4 or more times of preliminary discharges of ink from said recording head toward said capping member when said capping member is detached from said recording head after the ink suction from the discharge opening by said suction means, by supplying energy greater than energy at a recording condition by predetermined multiples of a minimum energy E_o required for generating the bubble, said recovery means including means for concurrently causing said suction means to suck the ink in said capping member that is open to atmosphere.

5,701,147

INK JET HEAD AND INK JET APPARATUS USING SAME

Minoru Nozawa, Machida, Japan, assignor to Canon Kabushiki Kaisha, Tokyo, Japan

Continuation of Ser. No. 114,395, Sep. 1, 1993, abandoned. This application May 15, 1996, Ser. No. 648,400

Claims priority, application Japan, Sep. 1, 1992, 4-233772

Int. Cl.^{6} B41J *2/05*

U.S. Cl. 347—58 6 Claims

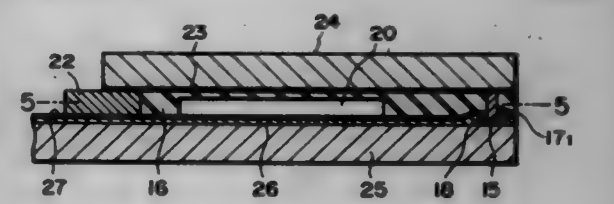

1. An ink jet recording head comprising:

a first substrate having energy generating elements for generating energy for ejecting a liquid;

a second substrate connected with said first substrate, said second substrate having a plurality of grooves cooperable with said first substrate so as to define a plurality of ink passages;

a plurality of discrete electrodes electrically connected with said energy generating elements, respectively; and

a common electrode electrically connected with said energy generating elements,

wherein said discrete electrodes are disposed on said first substrate, and said common electrode is disposed on said second substrate.

5,701,148
DEAERATOR FOR SIMPLIFIED INK JET HEAD
Edward R. Moynihan, Lebanon; David W. Gailus, Merrimack; Robert G. Palifka, Orford, all of N.H.; Paul A. Hoisington, Norwich; Nathan P. Hine, South Strafford, both of Vt.; David Adams-Brady, Meriden, N.H.; Melvin L. Biggs, Norwich, Vt.; Marlene M. McDonald, Enfield; Steven H. Barss, Wilmot Flat, both of N.H.; Diane Mackay, Corinth, Vt.; Bruce A. Paulson, Newport, N.H., and Stephen C. Mackay, Corinth, Vt., assignors to Spectra, Inc., Hanover, N.H.
Division of Ser. No. 406,297, Mar. 17, 1995, which is a continuation-in-part of Ser. No. 215,301, Mar. 21, 1994. This application Jun. 2, 1995, Ser. No. 460,108
Int. Cl.⁶ B41J *2/175;2/19;* **B01D** *53/22;59/12*
U.S. Cl. 347—92 **6 Claims**

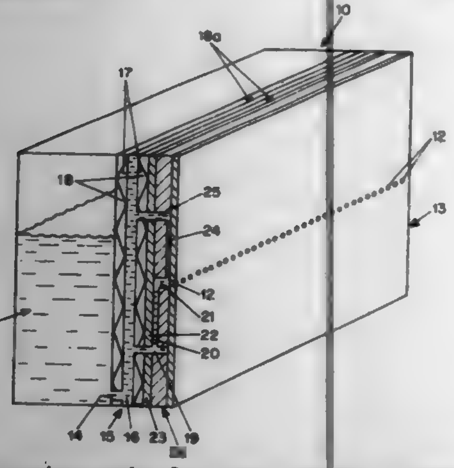

1. A deaeration member for an ink jet having an ink passage head comprising a tubular member made of air-permeable and ink-impermeable material having two ends and inserted into the ink in the ink passage in the ink jet head, one end of the tubular member being sealed and other end of the tubular member being connected to a source of subatomospheric pressure to extract dissolved air through the material of the tubular member from a surrounding body of ink in the ink passage.

5,701,149
METHOD TO OPTIMIZE THE OPERATION OF AN INK-JET PRINTER, AND A PRINTER USING SUCH A METHOD
Alain Pagnon, Bourg les Valence, and Pierre Rieuvernet, Valence, both of France, assignors to Imaje, Bourg les Valence, France
Continuation of Ser. No. 52,923, Apr. 27, 1993, abandoned. This application Oct. 4, 1995, Ser. No. 538,854
Claims priority, application France, Apr. 30, 1992, 92 05424
Int. Cl.⁶ B41J *2/175;2/18*
U.S. Cl. 347—89 **18 Claims**

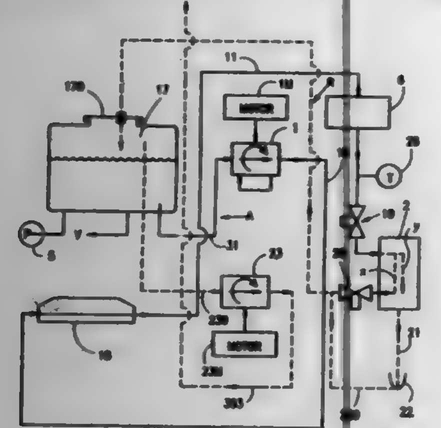

1. A method to optimize operation of a deflected continuous flow ink-jet printer, the ink-jet printer comprising an ink supplying circuit for the supply of ink to at least one printing head and an ink collecting circuit for collection of ink not used for printing, said ink collecting circuit comprising a gutter, a conduit connecting the gutter to an imperviously sealed ink tank and suction means to draw in an air pocket extending above ink in said ink tank to set up a depression in the ink tank, said depression allowing suction, from the ink collecting circuit, of a two-phase mixture formed by ink collected from the gutter and air carried along by suction of ink in the gutter, wherein said method comprises:

firstly, checking a rate of collection of the ink by the following steps of:

measuring a pressure of the air pocket by means of a sensor,

detecting a decrease in the pressure of the air pocket, which is indicative of an anomaly in the rate of collection of ink in said ink collecting circuit, the anomaly resulting in a lack of balance of losses of charge, in the conduit, between the ink flow and the air flow of the two-phase mixture;

secondly, controlling the operation of the suction means to be at a minimum suction rate compatible with a desired flow rate of ink in the conduit, and to be at a maximum suction rate when the anomaly is detected, the maximum suction rate allowing the losses of charge to be balanced.

5,701,150
THERMAL DYE TRANSFER PRINTING PROCESS FOR REDUCING CURLING OF A PRINT SHEET
Luc Horemans, Aartselaar, and Eric Kaerts, Meisele, both of Belgium, assignors to Agfa-Gevaert N.V., Mortsel, Belgium
Filed Mar. 7, 1995, Ser. No. 399,746
Claims priority, application European Pat. Off., Apr. 29, 1994, 94201179
Int. Cl.⁶ B41J *2/32*
U.S. Cl. 347—212 **2 Claims**

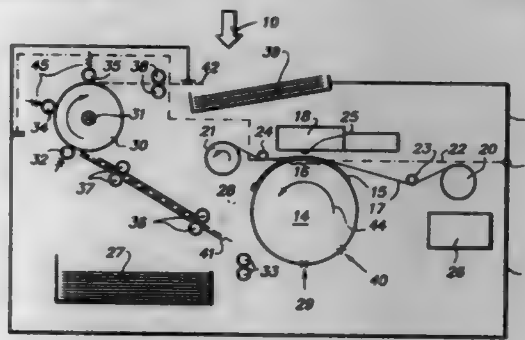

1. A thermal printing process for making transparent prints comprising: supporting a printing substrate having a front side and a rear side on a rotatable print drum such that the rear side contacts the rotatable print drum; thermal printing on the front side of the printing substrate by rotating the rotatable print drum at a printing speed while image-wise energizing a thermal print head thereby heating the front side of the printing substrate and forming an image on the front side of the printing substrate; subsequently conveying the printing substrate onto a heated roller having a peripheral surface wherein the rear side of the printing substrate contacts the peripheral surface of the heated roller thereby heating the rear side of the printing substrate and simultaneously rotating the heated roller at a peripheral speed wherein the peripheral speed is independent of the printing speed, further comprising adjusting the peripheral speed as a function of the heating of the front side of said printing substrate.

5,701,151
SYSTEM FOR POSITIONING AN IMAGE IN A DIGITAL PRINTER
David Plakosh, Rochester, N.Y., assignor to Xerox Corporation, Stamford, Conn.
Filed Oct. 30, 1995, Ser. No. 550,257
Int. Cl.⁶ H04N *1/21*
U.S. Cl. 347—247 **10 Claims**

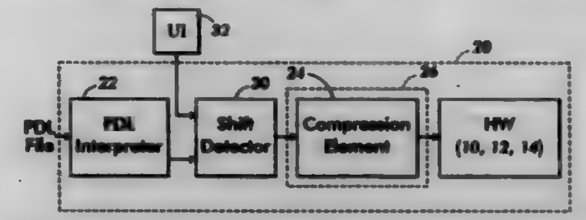

1. In a digital printing apparatus wherein an image is formed on a surface in response to imagewise digital data, the digital data being submitted to the apparatus in a PDL file, a method of manipulating the digital data to position the image on the surface, comprising the steps of:

interpreting the PDL file to yield a raw bitmap;

detecting shift instructions for positioning the image on the surface, the shift instructions reciting a number of scan lines the image is desired to be shifted;

compressing the raw bitmap according to a compression algorithm, to yield a compressed bitmap; and

adding blank-line instructions, according to the compresaion algorithm, to the compressed bitmap for adding a number of blank lines equal to the number of scan lines the image is desired to be shifted.

5,701,152
ARRANGEMENT FOR BILLING INTERACTIVE COMMUNICATION SERVICES
Howard Zehua Chen, Berkeley Heights, N.J., assignor to Lucent Technologies Inc., Murray Hill, N.J.
Filed Sep. 28, 1995, Ser. No. 534,903
Int. Cl.⁶ H04N *7/173*
U.S. Cl. 348—3 **14 Claims**

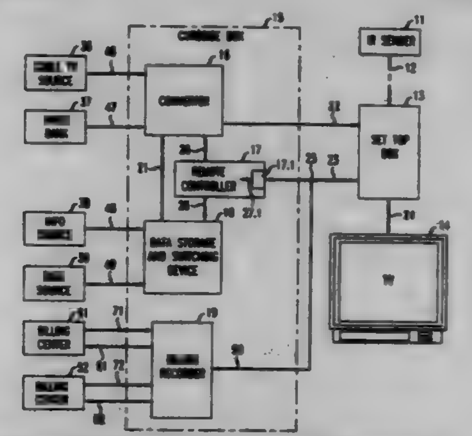

1. An interactive communication system comprising:

an arrangement that provides billing information to at least one remote information source, wherein each source sends information to a plurality of set-top-boxes, each set-top-box possessed by a separate customer;

including:

a billing recorder having recording circuitry and located in a place that is at least one of inaccessible to a plurality of customers and unknown to the customers; and

a set of first links, each first link connecting a separate one of the plurality of set-top-boxes to the billing recorder, each of the set-top-boxes having circuitry that can send a local billing signal and a channel access request signal simultaneously via the connected one of the first links to a junction located in a curbside box, wherein each first link comprises a first short link and second short link, the first short link connecting the junction to the recording circuitry of the billing recorder, and the second short link connecting the junction to a device that sends information to the set-to-box in response to the channel access request signal, the billing recorder recording each time each customer requests access to a channel.

5,701,153
METHOD AND SYSTEM USING TIME INFORMATION IN TEXTUAL REPRESENTATIONS OF SPEECH FOR CORRELATION TO A SECOND REPRESENTATION OF THAT SPEECH
Joshua A. S. Reichek, Berkeley, and Avi J. Stackenfeld, Richmond, both of Calif., assignors to Legal Video Services, Inc., Oakland, Calif.
Filed Jan. 14, 1994, Ser. No. 182,393
Int. Cl.⁶ H04N *5/782*
U.S. Cl. 348—15 **16 Claims**

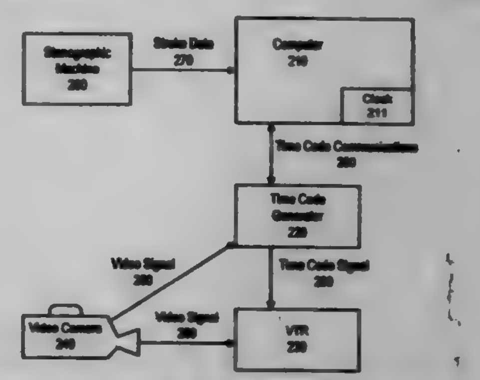

1. A method of inserting a timecode into a textual representation of a speech in a system, said system including a computer, a timecode generator, and videotape recorder, said computer coupled with said timecode generator and said videotape recorder, said method comprising:

outputting said timecode from said timecode generator at a time, said time corresponding to a portion of said speech;

storing, by said videotape recorder, a video representation of said portion with said timecode;

receiving, by said computer, a text data corresponding to said portion; and

in response to receiving said text data, said computer automatically inserting the representation of said timecode into said text data.

5,701,154
ELECTRONIC THREE-DIMENSIONAL VIEWING SYSTEM
John M. Dasso, 2933 SE. Taylor, Portland, Oreg. 97214
Filed Nov. 1, 1994, Ser. No. 333,130
Int. Cl.⁶ H04N *13/00;15/00*
U.S. Cl. 348—42 **12 Claims**

1. An electronic three-dimensional viewing system for viewing two-dimensional motion picture displays of sequential frames of images by left and right eyes of a viewer, which comprises:

a separate viewing monitor mounted for independent viewing thereof before each of the two eyes of a viewer;

a motion picture display consisting of a video recording of a conventional motion picture film typically projected onto a screen for two-dimensional viewing of sequential frames of images, said recording including stationary scenes recorded from the same line of sight and images in the scene that move in the scene from frame to frame, all typical of movies portrayed on motion picture film, a projection mechanism electronically projecting the same motion picture display on each of the two viewing monitors; and

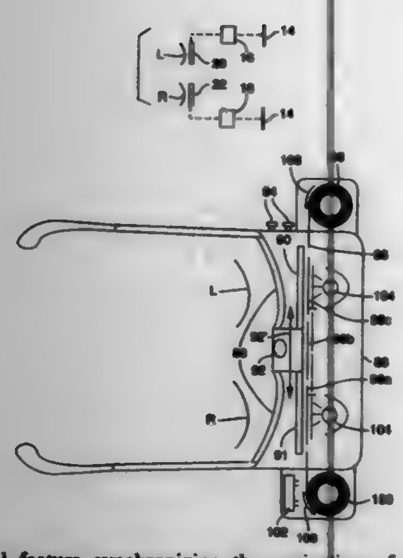

a control feature synchronizing the projection of the motion picture display onto the viewing monitors with the sequential frames of the display recorded from the same line of sight projected at a designated time delay onto one viewing monitor as compared to the same sequential frames displayed onto the other viewing monitor whereby only images on the frames which appear in motion are simultaneously seen by the two eyes at controlled offset and overlapping positions which is interpreted by the viewer's brain as three dimension.

5,701,155

PROCESSOR MODULE FOR VIDEO INSPECTION PROBE

Robert J. Wood, Syracuse; Michael J. Piloski, Skaneateles, and Gregory E. Paszk, Auburn, all of N.Y., assignors to Welch Allyn, Inc., Skaneateles Falls, N.Y.

Continuation of Ser. No. 944,129, Sep. 11, 1992, abandoned. This application Dec. 28, 1995, Ser. No. 581,304

Int. Cl.^{6} A61B *1/04*; H04N *7/18*

U.S. Cl. 348—72 16 Claims

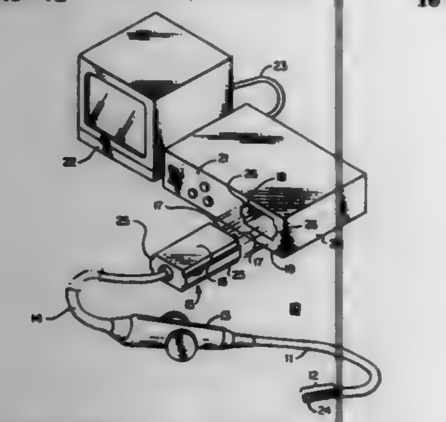

2. A video inspection probe comprising:
a body;
a solid-state imager positioned within said body for viewing a target;
focussing means including at least one optical component for focussing an optical image of said target onto said imager; and
an umbilical cable non-detachably connected at one end to said body, said cable having a processing module non-detachably connected at an opposite end, said module including a compact housing having video processing circuitry means retained therein for processing a signal of said target from said imager into a video monitor-ready video signal, said compact housing being detachably engageable with a combined light and power supply unit, said unit having receiving means including a cavity for accommodating said compact housing therein.

5,701,156

APPARATUS FOR OBSERVING THE DISPERSION PATTERN OF THE SPRAY PLUME OF A SPRAY NOZZLE

James A. Pierce, 3 Laurel Tree La., Foxboro, Mass. 02035

Filed May 24, 1995, Ser. No. 449,787

Int. Cl.^{6} H04N *7/18*

U.S. Cl. 348—86 8 Claims

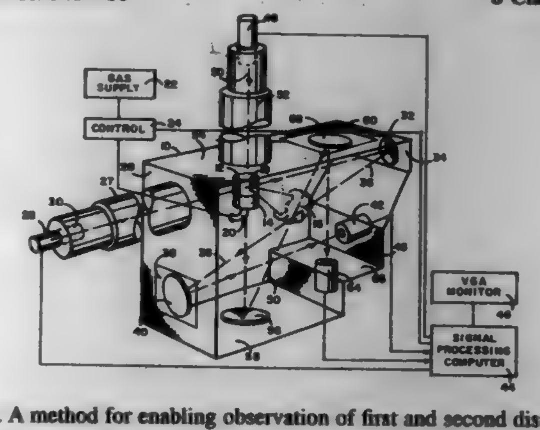

8. A method for enabling observation of first and second dispersion patterns of a spray plume from an orifice of a spray device or nozzle hereinafter referred to collectively as a nozzle, comprising the steps of:
providing a substantially light-impervious enclosure;
positioning said nozzle relative to said enclosure to contain a spray plume emanating from said nozzle within said enclosure;
providing a gas supply connected to said nozzle and activating said gas supply to produce said spray plume;
providing a first light source for projecting light;
providing a first concave mirror positioned a distance corresponding to its focal length from said first light source;
collimating said light by reflecting said light off said first concave mirror and passing said light through said spray plume at a first angle;
providing a first screen to receive said collimated light reflected from said first concave mirror after passing through said spray plume;
forming a spray plume image on said first screen;
providing a first television camera having an electrical analog output to receive said image of said spray plume;
providing a signal processor to receive said electrical analog output of said first television camera;
examining the output of said signal processor to determine the parameters of said first dispersion pattern;
providing a second structure relative to said enclosure comprising a second light source, a second concave mirror, a second screen and a second television camera corresponding, respectively, to said first light source, said first concave mirror, said first screen and said first television camera, said second structure projecting its collimated light through said spray plume at an angle to said first angle; and
directing the output of said second television camera to said signal processor to determine the parameters of said second dispersion pattern of said spray plume.

5,701,157

APPARATUS INCLUDING ELECTRONIC AND OPTICAL ZOOMING

Takashi Kato, Kawasaki; Jun Tokumitsu, Sagamihara, and Shigeyuki Suda, Yokohama, all of Japan, assignors to Canon Kabushiki Kaisha, Tokyo, Japan

Filed Jul. 9, 1993, Ser. No. 87,856

Claims priority, application Japan, Jul. 14, 1992, 4-209727

Int. Cl.^{6} H04N *5/262;5/225*

U.S. Cl. 348—240 7 Claims

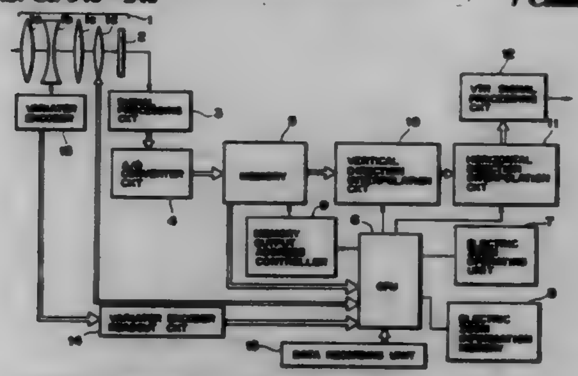

1. An image pickup apparatus comprising:
a zoom lens having an optical characteristic that a change of field angle is not constant during a zooming operation from a wide angle side to a telephoto side;
conversion means for converting an optical image, formed by said zoom lens, into an electrical signal;
process means for processing the electrical signal so as to perform electronic zooming; and
control means for controlling continuous overlapping execution of optical zooming by said zoom lens and the electronic zooming by said process means, and for changing a zoom speed of the electronic zooming by said process means in accordance with a focal length of said zoom lens, and wherein said control means is adapted to control said zoom lens and said process means such that a change in magnification caused by the optical zooming is contrary to a change of magnification caused by said process means.

5,701,158

DIGITAL IMAGE DECODING APPARATUS

Hideo Ohira; Tokumichi Murakami; Kohtaro Asai, and Toshiaki Shimada, all of Tokyo, Japan, assignors to Mitsubishi Denki Kabushiki Kaisha, Tokyo, Japan

Filed Sep. 17, 1996, Ser. No. 710,431

Claims priority, application Japan, Mar. 4, 1996, HEI 8-046346

Int. Cl.^{6} H04N *7/50*

U.S. Cl. 348—410 13 Claims

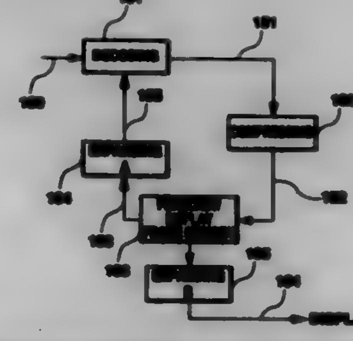

1. A digital image decoding apparatus comprising:
a decoding section for decoding inter-block image decoded data in block units to form decoded data;
a compressing section for compressing the decoded-in-block-unit data from said decoding section in block unit to form compressed data;
a forecast frame memory section for holding the compressed-in-block-unit data from said compressing section which correspond to one or more image frames; and
an expanding section for supplying data required by the decoding operation at said decoding section to said decoding section, said expanding section being operative to read out the compressed data from said forecast frame memory section, the read compressed data being then expanded and supplied to said decoding section.

5,701,159

DIGITAL IMAGE DECODING APPARATUS

Hideo Ohira; Tokumichi Murakami; Kohtaro Asai, and Toshiaki Shimada, all of Tokyo, Japan, assignors to Mitsubishi Denki Kabushiki Kaisha, Tokyo, Japan

Filed Sep. 17, 1996, Ser. No. 715,161

Claims priority, application Japan, Mar. 4, 1996, HEI 8-046345

Int. Cl.^{6} H04N *7/50*

U.S. Cl. 348—410 12 Claims

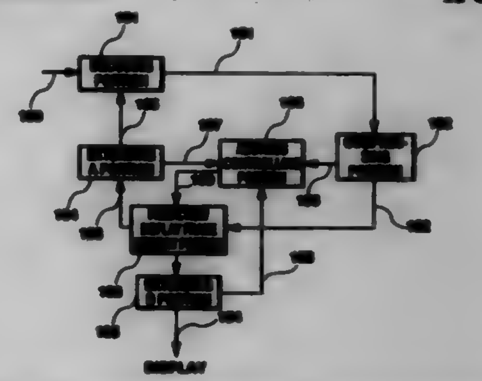

1. A digital image decoding apparatus, said apparatus comprising:
a decoding circuit for decoding inter-frame coded image coded data at a block unit and obtaining decoded data;
a compressing circuits for compressing the block unit decoded data obtained by the decoding circuits and obtaining compressed data;
a prediction frame memory for storing at least one image frame of block unit compressed data obtained by the compressing circuits;
a decompressing circuits for decompressing the compressed data which has been stored in the prediction frame memory; and
an address controlling circuits for controlling the writing of the compressed data to the prediction frame memory and the reading of the compressed data from the prediction frame memory.

5,701,160

IMAGE ENCODING AND DECODING APPARATUS

Junichi Kimura, Hachioji, and Taizo Kinoshita, Tachikawa, both of Japan, assignors to Hitachi, Ltd., Tokyo, Japan

Filed Jul. 20, 1995, Ser. No. 504,661

Claims priority, application Japan, Jul. 22, 1994, 6-170699

Int. Cl.^{6} H04N *7/36;7/50*

U.S. Cl. 348—413 9 Claims

1. An image encoding apparatus in which an input image supplied thereto is subdivided into a plurality of blocks, a predicted image of each block is created according to an image reproduced from previously encoded signals, a difference image is produced between the input image and the predicted image, and the difference image is encoded, comprising:
means for dividing the input image into N (N≧2) sub-images of which boundary areas are overlapped with each other;

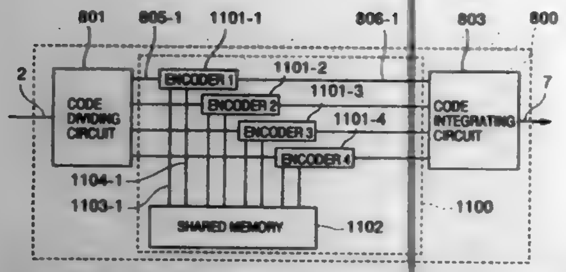

N encoding units respectively provided for the sub-images for achieving the predicted image creation, the encoding operation, and the image reproduction;
a shared information processing unit for distributing the image reproduced by the encoding unit to the other encoding sections related thereto; and
a code assembling unit for converting code strings produced respectively by the encoding units into N or less encoded code strings.

5,701,161
METHOD AND APPARATUS FOR PROVIDING REAL TIME DATA ON A VIEWING SCREEN CONCURRENTLY WITH ANY PROGRAMING IN PROCESS
Mark C. Williams, 3849 N. Capital Ave., Indianapolis, Ind. 46208, and Timothy W. Price, 5779 Sebring Dr., Indianapolis, Ind. 46254
Filed Dec. 14, 1994, Ser. No. 358,074
Int. Cl.⁶ H04N *7/08;7/087;5/445*
U.S. Cl. 348—468 **25 Claims**

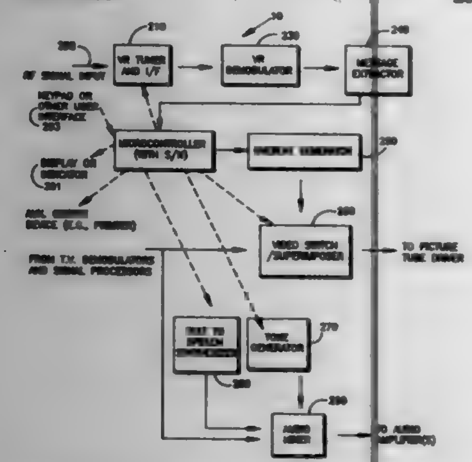

1. A method for superimposing a real time video reporter message on a television picture concurrently with any programing in progress, which comprises the steps of:
splitting a television broadcast signal into at least a first television signal and a second video reporter signal;
continuously tuning the video reporter signal for predetermined channels having video reporter data thereon;
repeating the tuning step until video reporter data is detected;
decoding the video reporter data;
extracting messages from the video reporter data;
selecting the messages to be superimposed on the television picture;
generating a video signal from the video reporter data for superimposing over the television picture; and,
superimposing the video signal over the television picture of the programing in progress.

5,701,162
TELEVISION CHANNEL AURAL DISPLAY AND METHOD THEREOF
Chang Won Choi, Kyungsangbuk-do, Rep. of Korea, assignor to LG Semicon Co., Ltd., Chungcheongbuk-do, Rep. of Korea
Filed Oct. 10, 1995, Ser. No. 541,773
Claims priority, application Rep. of Korea, Oct. 7, 1994, 25720/1994
Int. Cl.⁶ H04N *5/44*
U.S. Cl. 348—570 **4 Claims**

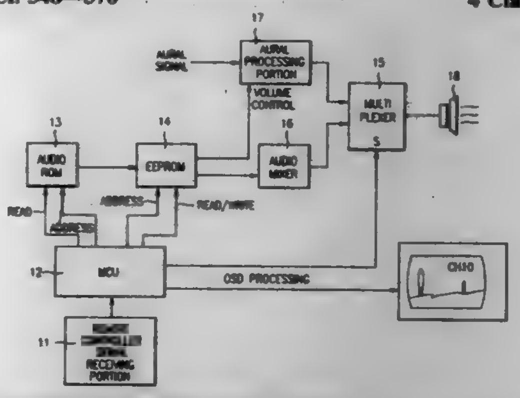

1. A television channel display comprising:
remote controller signal receiving means for receiving a channel number selected by a user;
a micro computer unit (MCU) for receiving a signal output from the remote controller signal receiving means;
a memory for storing an audio signal of the selected channel number and a broadcasting station name and for outputting the stored audio signal in response to a control signal output from the MCU, wherein the memory comprises an audio ROM for storing the audio signal of the channel number and the broadcasting station name and an EEPROM for receiving data from the audio ROM and storing the data just prior to a power-off;
an audio mixer for mixing the audio signal of the channel number and the broadcasting station name output from the memory;
an aural processor for processing audio signals of the selected broadcasting program;
a multiplexer, responsive to the MCU, for selectively outputting the audio signal from the audio mixer and the audio signals from the aural processor; and
a speaker for receiving the output from the multiplexer and for converting the received output into a speaker audio signal.

5,701,163
VIDEO PROCESSING METHOD AND APPARATUS
John William Richards, Stockbridge, and Martin Rex Dorricott, Basingstoke, both of United Kingdom, assignors to Sony Corporation, Tokyo, Japan, and Sony United Kingdom Limited, Weybridge, England
Filed Dec. 18, 1995, Ser. No. 573,992
Claims priority, application United Kingdom, Jan. 18, 1995, 9501072
Int. Cl.⁶ H04N *5/262*
U.S. Cl. 348—578 **19 Claims**
1. A method for processing video frames comprising animated images so as to blur movement of the animated images between successive frames, the method comprising the steps of:
comparing a first input frame with the following input frame;
identifying moving areas in the first input frame by means of the comparison;
calculating the velocity of the movement of the moving areas between the first and following input frame;

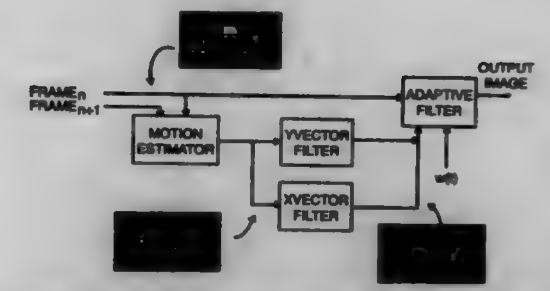

summing, only for each input pixel site within the identified moving areas of the input frame, the pixel value of said each input pixel site and adjacent pixel values determined according to the calculated velocities and a predetermined aperture time for the input frame; and
providing an output frame from at least the summed pixel values and pixel values of areas of the input frame other than said moving areas.

5,701,164
MACROBLOCK CODING INCLUDING DIFFERENCE BETWEEN MOTION VECTORS
Motiki Kato, Kanagawa, Japan, assignor to Sony Corporation, Tokyo, Japan
Continuation of Ser. No. 290,888, Dec. 8, 1994, abandoned. This application Dec. 19, 1996, Ser. No. 770,585
Claims priority, application Japan, Mar. 24, 1993, P5-065698; Apr. 30, 1993, P5-124686
Int. Cl.⁶ H04N *7/32*
U.S. Cl. 348—699 **12 Claims**

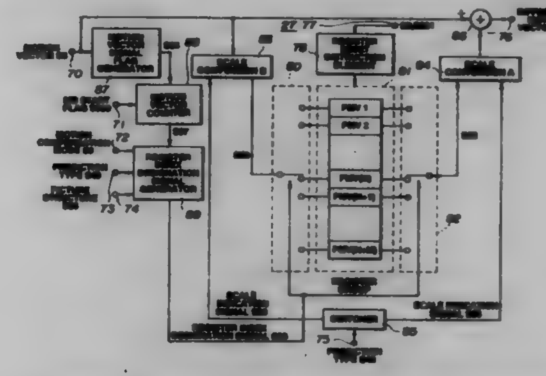

1. A method of coding motion vectors of macroblocks coded in a forward prediction mode, a backward prediction mode or a bidirectional prediction mode, the method comprising the steps of:
receiving current motion vectors,
detecting an order of transmission and a predetermined prediction direction of the current motion vectors within one macroblock,
selecting one of a plurality of L memories for each motion vector based on the detected order of transmission and the predetermined prediction direction, so that each motion vector has a corresponding memory and such that each respective memory is selected only once for each said macroblock,
reading out a former motion vector in the same predetermined prediction direction from the selected memory, and
subtracting the former motion vector from the corresponding current motion vector, thus sequentially generating difference motion vectors.

5,701,165
PROJECTION-TYPE LIQUID CRYSTAL DISPLAY WITH A LIQUID CRYSTAL PANEL HAVING A REFLECTION-REDUCING COATING LAYER
Masumi Kubo, Nara; Yasunobu Akebi, Yamabe-gun, and Toshihiro Yamashita, Nara, all of Japan, assignors to Sharp Kabushiki Kaisha, Osaka, Japan
Filed Jun. 6, 1995, Ser. No. 468,654
Claims priority, application Japan, Jul. 5, 1994, 6-153877; Dec. 19, 1994, 6-315334
Int. Cl.⁶ G02F *1/1335*
U.S. Cl. 349—5 **23 Claims**

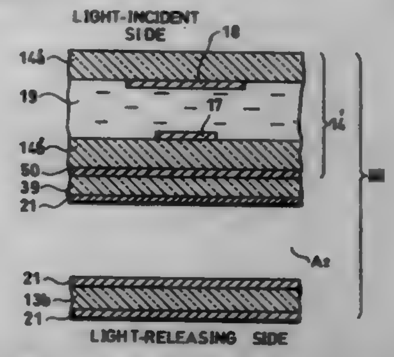

1. A projection-type liquid crystal display, which has a liquid-crystal panel that is constituted of an active-matrix substrate having semiconductor active devices formed thereon, an opposing substrate having opposing electrodes formed thereon, and a liquid crystal layer sandwiched therebetween, and which allows light rays to be incident on the liquid-crystal panel from the opposing substrate side, as well as allowing light rays released from the liquid-crystal panel to pass through a projection lens, so that images displayed on the liquid-crystal panel are projected in an enlarged manner, comprising:
a shading pattern for shielding the light rays that have been incident on the liquid-crystal panel so that they are not directly incident on the semiconductor active devices formed on the active-matrix substrate, the shading pattern being formed in the liquid-crystal panel;
a light-releasing-side polarizing element having a plate shape which is installed in such manner as to adhere to the light-releasing surface of the active-matrix substrate; and
a reflection-reducing coating layer directly formed on the light-releasing surface of the light-releasing-side polarizing element.

5,701,166
ACTIVE MATRIX LIQUID CRYSTAL DISPLAY HAVING FIRST AND SECOND DISPLAY ELECTRODES CAPACITIVELY COUPLE TO SECOND AND FIRST DATA BUSES, RESPECTIVELY
Ogurtsov Oleg Fedorovish, and Kazurov Boris Ivanovich, both of Moscow, Russian Federation, assignors to LG Electronics Inc., Seoul, Rep. of Korea
Filed Sep. 26, 1995, Ser. No. 534,688
Claims priority, application Russian Federation, Sep. 26, 1994, 94307146
Int. Cl.⁶ G02F *1/1343*
U.S. Cl. 349—38 **5 Claims**
1. An active matrix liquid crystal display, comprising:
a plurality of address buses substantially parallel to one another;
a plurality of data buses substantially perpendicular to the address buses; and
a plurality of picture elements arranged in a matrix, each picture element being surrounded by at least one common address bus of the plurality of address buses and two adjacent data buses of the plurality of data buses, and including:
at least two display electrodes separated from one another;

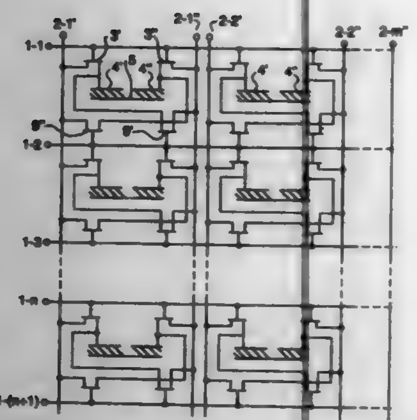

a first switching transistor coupled between a first one of the adjacent data buses, the common address bus, and a first one of the display electrodes;

a second switching transistor coupled between a second one of the adjacent data buses, the common address bus, and a second one of the display electrodes;

a first capacitor coupled between the first data bus and the second display electrode; and

a second capacitor coupled between the second data bus and the first display electrode.

5,701,167

LCD HAVING A PERIPHERAL CIRCUIT WITH TFTS HAVING THE SAME STRUCTURE AS TFTS IN THE DISPLAY REGION

Shunpei Yamazaki, Tokyo, Japan, assignor to Semiconductor Energy Laboratory Co., Ltd., Kanagawa-ken, Japan

Continuation of Ser. No. 500,241, Jul. 10, 1995, abandoned, which is a division of Ser. No. 384,593, Feb. 3, 1995, Pat. No. 5,453,858, which is a continuation of Ser. No. 217,211, Mar. 24, 1994, abandoned, which is a continuation of Ser. No. 811,063, Dec. 20, 1991, abandoned. This application Sep. 13, 1996, Ser. No. 712,574

Claims priority, application Japan, Dec. 25, 1990, 2-418366; Dec. 25, 1990, 2-418367

Int. Cl.^{6} G02F *1/136;1/1345*

U.S. Cl. 349—42 **6 Claims**

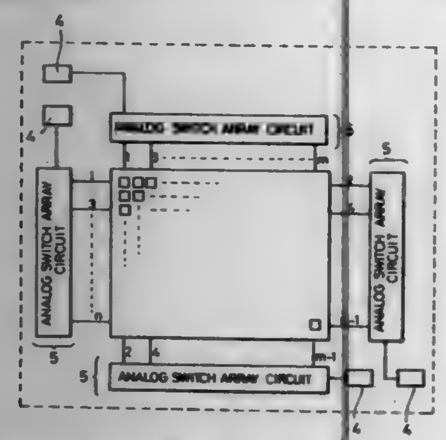

3. An electro-optical device comprising:

a first substrate and a second substrate;

an electro-optical modulating layer provided between said first and second substrates;

a plurality of thin film transistors provided on said first substrate;

a plurality of pixel electrodes provided on said first substrate, each of said pixel electrodes being connected to corresponding one of said thin film transistors at one of source and drain thereof;

a plurality of column lines connected to gate terminals of said thin film transistors;

a plurality of row lines, each being connected to corresponding one of said thin film transistors at the other of source and drain thereof;

a thin film transistor provided on said first substrate in a peripheral circuit for supplying a signal to at least one of said plurality of thin film transistors; and

a semiconductor chip mounted on said first substrate in said peripheral circuit,

wherein said thin film transistor provided in said peripheral circuit has the same structure as said plurality of thin film transistors have, and

wherein the sources and drains of said plurality of thin film transistors and a source and a drain of said thin film transistor provided in said peripheral circuit comprise a semiconductor having an oxygen concentration of 7×10^{19} atoms·cm^{-3} or less, and

wherein channel forming regions of said plurality of thin film transistors have an oxygen concentration of 5×10^{21} atoms·cm^{-3}.

5,701,168

INVERSE TWISTED AND SUPER-TWISTED NEMATIC LIQUID CRYSTAL DEVICE

Jayantilal Shamjibhai Patel, Red Bank, N.J., assignor to Bell Communications Research, Inc., Morristown, N.J.

Filed Jun. 29, 1995, Ser. No. 496,559

Int. Cl.^{6} G02F *1/1337*

U.S. Cl. 349—130 **5 Claims**

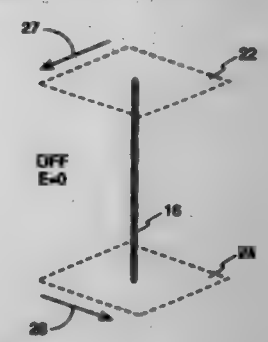

1. A liquid crystal cell, comprising:

two alignment layers comprising homeotropic alignment material disposed generally in parallel and separated by a gap, the alignment material within the plane of each respective layer being aligned in a different respective alignment direction;

a chiral liquid crystal having a negative dielectric anisotropy filling said gap; and

an electrode disposed on the outside of each of said alignment layers;

at least one of said alignment layers and electrodes being patterned, and an anisotropic dielectric constant, gap distance, wavelength, and difference between said alignment directions being chosen to yield a super-twisted liquid crystal cell producing substantial linearly polarized optical output.

5,701,169

ILLUMINATION SYSTEM AND EXPOSURE APPARATUS WITH DEMOUNTABLE TRANSPARENT PROTECTIVE MEMBER

Hitoshi Yoshioka, Utsunomiya, Japan, assignor to Canon Kabushiki Kaisha, Tokyo, Japan

Continuation of Ser. No. 413,264, Mar. 30, 1995, abandoned. This application May 21, 1996, Ser. No. 651,006

Claims priority, application Japan, Mar. 30, 1994, 6-085946

Int. Cl.^{6} H01L *21/30;* **G03F** *7/20*

U.S. Cl. 355—30 **60 Claims**

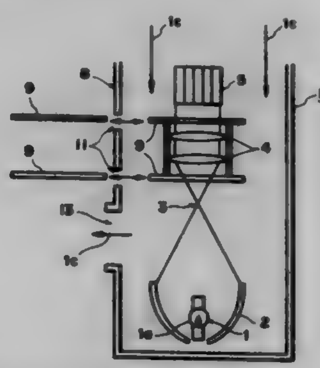

1. An illumination system, comprising:

an optical system for receiving light from a light source;

a barrel for accommodating the light source and said optical system therein, said barrel having an inside gas containing a material which may cause blur of an optical element of said optical system; and

a transparent protecting member demountably disposed in said barrel, for protecting the optical element against the material.

5,701,170

SYSTEM FOR AUTOMATICALLY EXPOSING AND LABELING A PLURALITY OF LITHOGRAPHIC PLATES

John Powers; Terly Shelton, and Michael Gonseth, all of Springfield, Mo., assignors to Western Litho Plate & Supply Co., St. Louis, Mo.

Filed Jul. 26, 1996, Ser. No. 686,653

Int. Cl.^{6} G03B *27/30;27/04;* **B07C** *5/00*

U.S. Cl. 355—40 **19 Claims**

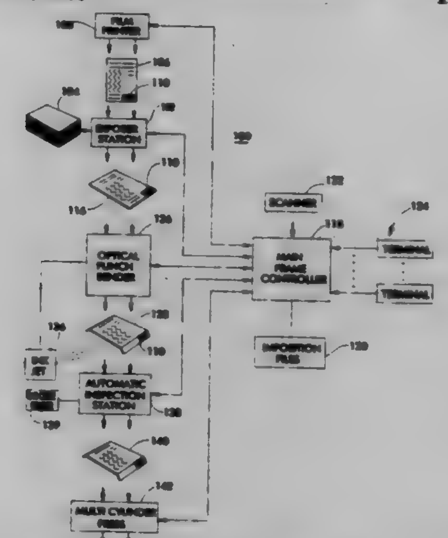

1. A system for generating from unimaged plates a plurality of exposed lithographic plates to be provided to a press for use in printing, the system for use with a film exposer for exposing a negative which includes an identifying code identifying the negative, said system comprising:

an exposing station having a first reader for reading the identifying code and having an exposer for exposing a number of unimaged plates to generate an image thereon from the exposed negative, the number of exposed plates corresponding to the identifying code read by the reader;

a bending station having a second reader for reading the identifying code on the exposed plates, and having an optical punch bender for bending the exposed plates in accordance with information corresponding to the identifying code; and

an inspection station having a third reader for reading the identifying code on the bent plates and having an inspection unit for inspecting the bent plates to determine whether a particular bent plate has parameters which correspond to parameters defined by the identifying code of the particular bent plate whereby inspected plates which pass inspection and which have labels thereon are provided to the press for use in printing.

5,701,171

APPARATUS FOR CONSTRAINING MOVING PHOTOGRAPHIC FILM

Carl Wilson Roy, Spencerport, and John Adams Schempp, Jr., Fairport, both of N.Y., assignors to Eastman Kodak Company, Rochester, N.Y.

Filed Mar. 4, 1996, Ser. No. 610,447

Int. Cl.^{6} G03D *27/62*

U.S. Cl. 355—76 **15 Claims**

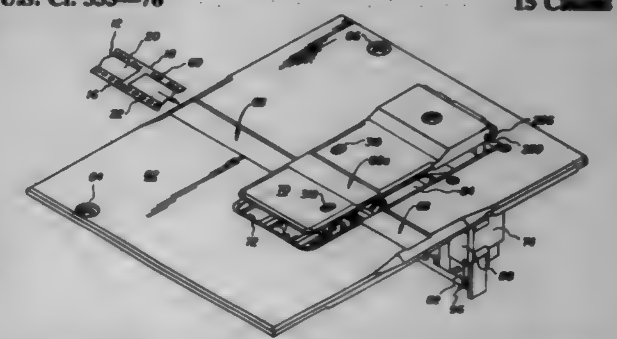

1. Apparatus for constraining a moving web of photographic film, comprising:

a first frame;

first and second oppositely facing, substantially parallel edge guides each supported by said first frame, each edge guide comprising a contact surface for engaging an edge of the web moving between said edge guides, each contact surface comprising a central portion and, on opposite sides of said central portion, further, curved portions to provide lateral strength in the web moving across said contact surfaces between said edge guides;

a second frame;

first and second film deflectors supported by said second frame;

means for relatively positioning said first and second frames with said film deflectors engaging the web on opposite sides of said central portion, thereby to deflect the web into a serpentine path extended along one of said further curved portions, across said central portion and along the other of said further curved portions; and

means for selectively adjusting depth of engagement of said film deflectors on opposite sides of said central portion as a function of at least one of thickness or stiffness of the web, to vary deflection of the web into said serpentine path, whereby webs of photographic films having different properties can be constrained.

5,701,172
OPTICAL FLOWMETER
Medhat T. Azzazy, Laguna Niguel, Calif., assignor to Gas Research Institute, Chicago, Ill.
Filed Jun. 7, 1995, Ser. No. 485,949
Int. Cl.^{6} G01P *3/36*
U.S. Cl. 356—28 **8 Claims**

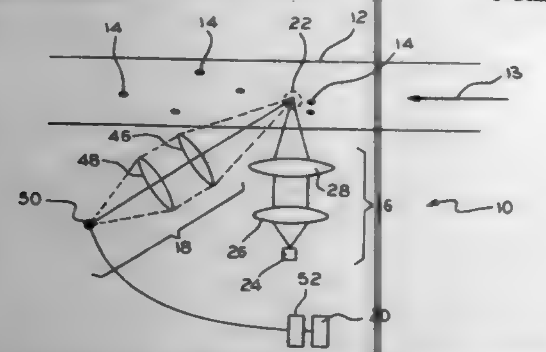

1. Apparatus for measuring the flow velocity of gas in a pipeline, the gas including light-reflecting particles, comprising
- a transmitter which produces optical patterns in the pipeline, said transmitter having a laser diode array, said laser diode array having a plurality of individually addressable laser diodes, and at least one optical lens for focusing light produced by said diodes at discrete focal points in the pipeline,
- a receiver for detecting scattered radiation which is reflected by particles passing through said focal points in the pipeline, said receiver producing output signals, and
- a processor for calculating the flow velocity of the particles from said output signals.

5,701,173
METHOD AND APPARATUS FOR REDUCING THE UNWANTED EFFECTS OF NOISE PRESENT IN A THREE DIMENSIONAL COLOR IMAGING SYSTEM
Marc Rioux, Ottawa, Canada, assignor to National Research Council of Canada, Ottawa, Canada
Filed Feb. 20, 1996, Ser. No. 603,422
Int. Cl.^{6} G01B *11/24;* **G01J** *3/50*
U.S. Cl. 356—73 **9 Claims**

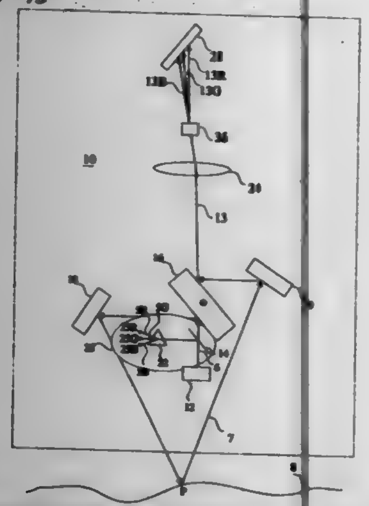

1. A method of determining the color and profile of a target surface comprising the steps of:
(a) providing a beam of light containing a plurality of wavelengths wherein at least one wavelength is well defined;
(b) separating the beam of light into a first beam and a second beam;
(c) providing at least a portion of the second beam to means for detecting information related to the spectral content of the beam, and for generating signals representative of the information related spectral content of the second beam;
(d) scanning the target surface with the first beam of light;
(e) providing at least a portion of the first beam that has reflected from the target surface to a means for detecting information related to the spectral content of the first beam;
(f) generating signals representative of the spectral content of scattered light from the surface;
(g) determining as a function of the signals generated in step (c) representative of the spectral content of the second beam and the signals representative of the spectral content of light scattered from the surface generated in step (f), normalized values representative of the color of the surface; and,
(h) detecting the profile of the surface from at least a portion of the first beam.

5,701,174
TEMPLATE MASK FOR ASSISTING IN OPTICAL INSPECTION OF OXIDATION INDUCED STACKING FAULT (OISF)
Ching Hua Yeh, and Shun-Long Chen, both of Hsin-Chu, Taiwan, assignors to Taiwan Semiconductor Manufacturing Company Ltd., Hsin-Chu, Taiwan
Filed Jul. 15, 1996, Ser. No. 679,914
Int. Cl.^{6} G01N *21/00;21/55*
U.S. Cl. 356—237 **10 Claims**

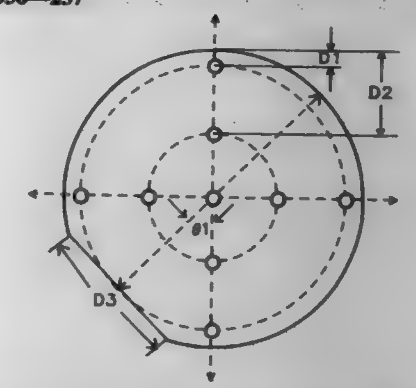

1. A method for optically inspecting a semiconductor substrate for defects such as oxidation induced stacking faults comprising:
- providing a semiconductor substrate, the semiconductor substrate having a surface to be inspected for defects such as oxidation induced stacking faults;
- aligning the surface of the semiconductor substrate to be inspected for defects such as oxidation induced stacking faults a template mask, the template mask having a minimum of one aperture which leaves exposed a portion of the surface of the semiconductor substrate to be inspected for defects such as oxidation induced stacking faults; and
- inspecting optically the portion of the surface of the semiconductor substrate exposed through the aperture, while the semiconductor substrate remains fixed with respect to the template mask.

5,701,175
SPECTROPHOTOMETER MOUSE
David A. Kostizak, 21 Hill Creek Rd., Rochester, N.Y. 14625, and James M. Zavislan, 5 Wandering Trail, Pittsford, N.Y. 14534
Filed Aug. 2, 1996, Ser. No. 691,620
Int. Cl.^{6} G01J *3/28*
U.S. Cl. 356—326 **40 Claims**

1. A spectrophotometer mouse for making color spectrum measurements of at least one target area on a surface over which the mouse is movable, said spectrophotometer mouse comprising:

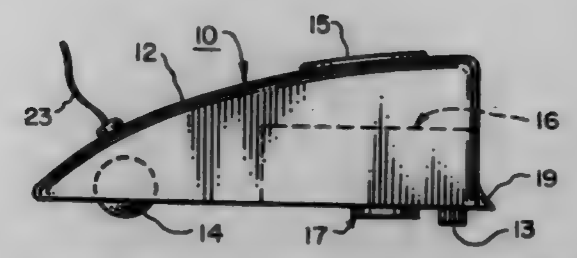

- a housing having a shape to conform to the hand of an operator;
- means for identifying the position of said mouse on said surface said surface;
- a spectrophotometer in said housing having an input for measuring the color spectrum of said target area on said surface;
- means for locating said target area on said surface, wherein said locating means comprises a reference position finder for locating a reference position for the mouse in fixed relationship to said target area on said surface, and locating the position of said target area on said surface with respect to said reference position; and
- means for detecting when said input is substantially coincident with said located target area.

5,701,176
HIGH TEMPERATURE LIGHT SCATTERING MEASUREMENT DEVICE COMPRISING A RIGID EXTENSION TUBE
Robert E. Dion, Readsboro, Vt., and Norman C. Ford, Jr., Amherst, Mass., assignors to Precision Detectors, Inc., Amherst, Mass.
Filed Jul. 28, 1995, Ser. No. 508,592
Int. Cl.^{6} G01N *15/06*
U.S. Cl. 356—338 **14 Claims**

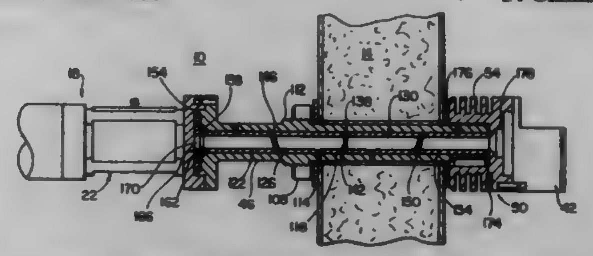

1. A light scattering apparatus for characterizing molecules at an elevated temperature, said apparatus comprising:
- an oven having insulated walls, one of said walls defining an opening;
- a light scattering device located within said oven, said light scattering device having an optical axis;
- a laser located proximate to and outside said oven and
- a rigid extension tube extending from said laser to said light scattering device through said opening in one said oven wall and defining a bore configured to permit light from said laser to reach said light scattering device, said rigid extension tube having a low coefficient of expansion and low thermal conductivity, wherein said rigid extension tube maintains the light from said laser accurately aligned with the optical axis of said light scattering device during operation and maintains direction of polarization of the light from said laser between said laser and said light scattering device, and wherein said rigid extension tube limits heat transfer from said oven to said laser.

5,701,177
METHOD FOR DETECTING FAULT OF OPTICAL FIBER GYRO AND APPARATUS FOR DIAGNOSING FAULT OF THE SAME
Tatsuya Kumagai, Hitachi; Hiroshi Kajioka, Ibaraki-ken; Osamu Kobayashi; Munehiro Akiyama, both of Hitachi; Shigeru Oho, and Hisao Sonobe, both of Katsuta, all of Japan, assignors to Hitachi Cable, Ltd., and Hitachi, Ltd., both of Tokyo, Japan
Continuation of Ser. No. 340,833, Nov. 16, 1994, abandoned. This application Feb. 4, 1997, Ser. No. 795,293
Claims priority, application Japan, Nov. 16, 1993, 5-286368
Int. Cl.^{6} G01C *19/64*
U.S. Cl. 356—350 **14 Claims**

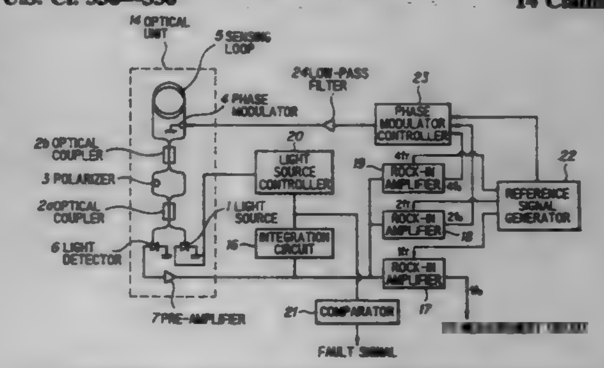

1. A method for detecting fault of an optical fiber gyro, comprising the steps of:
- emitting a light from a light source to provide an emitted light;
- modulating a phase of said emitted light to provide a phase-modulated light by a phase modulating signal;
- propagating said phase-modulated light through an optical fiber sensing loop to provide a sensing loop propagated light;
- receiving said sensing loop propagated light to provide an electric signal;
- providing a fundamental wave component and even number harmonic wave components of said phase modulating signal by receiving said electric signal; and
- detecting said fault in an optical system in said optical fiber gyro in dependence on whether or not respective changes of said fundamental wave component and said even number harmonic components are below respective predetermined levels.

5,701,178
NON-DAMAGING FLATNESS AND THICKNESS GAUGE FOR GLASS
James F. Burns, Lindley; Michael J. Dailey, Painted Post, and Scott W. Deming, Elmira, all of N.Y., assignors to Corning Incorporated, Corning, N.Y.
Filed Jul. 5, 1994, Ser. No. 270,753
Int. Cl.^{6} G01B *11/06;11/30*
U.S. Cl. 356—371 **15 Claims**

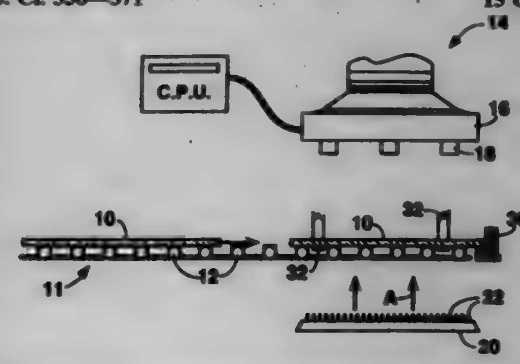

1. A method for measuring the flatness and thickness of glass sheets, comprising:

transporting a glass sheet along a transport path to an inspection location which comprises a plurality of edge rollers and a glass sheet support beneath the path;
raising said support between said edge rollers to contact and raise said glass sheet above said path;
sensing at least one surface of the glass sheet with a plurality of fiber optic sensors while said sheet is supported above said path, said sensors located at a plurality of locations on said sheet, each sensor sensing said surfaces at each sensor location and producing at least one signal corresponding to the location of one of said surfaces at each location;
sending said at least one signal to a central processing unit; and
using said signal to calculate a property of the glass sheet.

5,701,179
METHOD AND SYSTEM FOR MEASURING DIMENSIONS OF AN EDGE OF A PART
Chanchal Chatterjee, Lafayette, Ind., assignor to Medar, Inc., Farmington Hills, Mich.
Filed Sep. 29, 1995, Ser. No. 536,616
Int. Cl.⁶ G01B *11/24*
U.S. Cl. 356—376 **20 Claims**

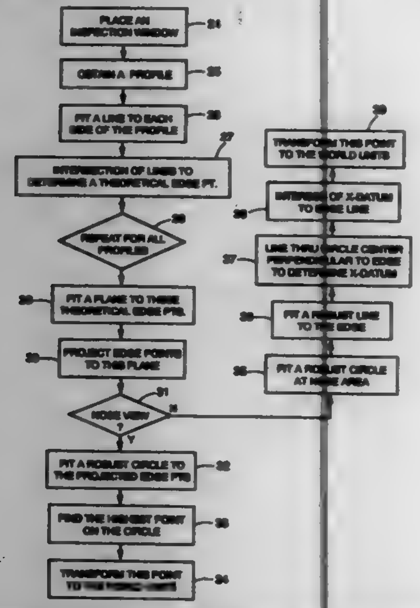

1. A method for automatically measuring dimensions of an edge of a part at a vision station, the method comprising the steps of:
determining a measurement window having a bounded area;
generating a 3-D digital image containing the part to be measured at the vision station;
placing the measurement window in the digital image of the part so that the bounded area bounds a subset of the digital image including at least one edge of the part; and
processing the subset of the 3-D digital image within the bounded area to obtain at least one dimension associated with the at least one edge of the part.

5,701,180
APPARATUS AND METHOD FOR DETECTING A FORMATION IN A SHEET MATERIAL
Stephen A. Saindon; Kevin O. Heindel, both of Appleton, and James G. Morrow, Wauwatosa, all of Wis., assignors to CMD Corporation, Appleton, Wis.
Continuation of Ser. No. 197,216, Feb. 16, 1994, Pat. No. 5,488,480. This application Dec. 14, 1995, Ser. No. 572,508
Int. Cl.⁶ G01N *21/84; 21/00*
U.S. Cl. 356—429 **12 Claims**

1. An arrangement for detecting a perforation in a film moving in a predetermined direction of travel comprising:

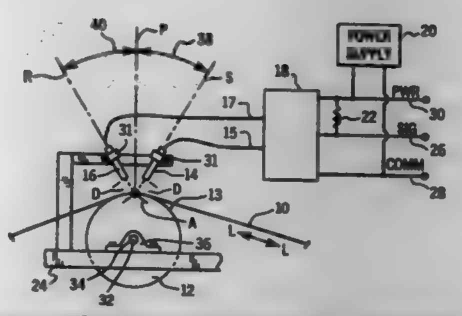

a support surface disposed to support the moving film at an interface between the surface and the film;
means, adjacent the interface, for directing radiation toward the interface along a line substantially parallel to the perforation of interest and substantially perpendicular to the direction of travel, a portion of the radiation being reflected by the film at a varying intensity;
means, adjacent the interface, for receiving the portion of the radiation reflected by the film along the line;
means for producing a signal representative of the intensity of the portion of the radiation; and
selectively adjustable means for monitoring the signal for selectively detecting the perforation in the moving film oriented substantially perpendicular to the direction of travel in response to changes in the intensity of the portion of the radiation.

5,701,181
FIBER OPTIC DIFFUSE LIGHT REFLECTANCE SENSOR UTILIZED IN THE DETECTION OF OCCULT BLOOD
Anthony Bolarski, Columbus, Ohio, and Andrew Dosmann, Granger, Ind., assignors to Bayer Corporation, Elkhart, Ind.
Filed May 12, 1995, Ser. No. 440,105
Int. Cl.⁶ G01N *21/47;* **G02B** *6/04;* **G01J** *3/46*
U.S. Cl. 356—446 **12 Claims**

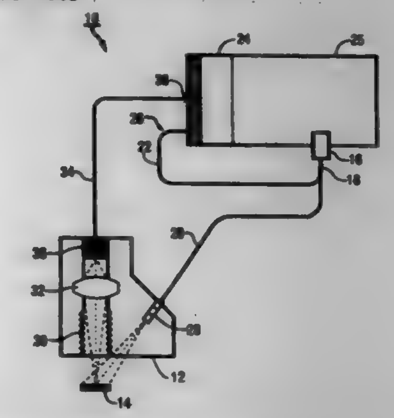

1. A fiber optic diffuse light reflectance sensor for detecting light reflected off of a reagent test pad reacted with a liquid specimen containing occult blood, comprising:
illumination means for providing light;
an illumination fiber optic bundle for receiving said light from said illumination means at an input end, said illumination fiber optic bundle transmitting said light through an output end of said illumination fiber optic bundle and reflecting said light off of said reagent test strip pad;

lens means for producing an image of said occult blood reacted with said reagent test strip pad by focusing said light reflected by said reagent test pad onto a plurality of optical fibers;
wherein said plurality of optical fibers form a detection optical fiber bundle having an input end for receiving said light focused by said lens means and an output end for emitting said light, said plurality of optical fibers at said input end of said detection optical fiber bundle being substantially arranged as an array to receive said image such that each optical fiber receives a portion of said image with a resolution, provided by said plurality of optical fibers, sufficient to provide detection of said occult blood, said plurality of optical fibers at said output end of said detection optical fiber bundle being arranged substantially linearly;
a linear array detector optically coupled to said output end of said detection optical fiber bundle, said linear array detector receiving said light emitted from said detection optical fiber bundle and converting said light into corresponding electrical signals; and
interpretation means for interpreting color from said electrical signals.

5,701,182
COLOR IMAGE FORMING APPARATUS AND METHOD THEREOF
Kenjiro Hori, Tokorozawa; Satoshi Akiyama, Yokohama; Takefumi Takubo, Yokohama, and Tetsuo Kishida, Yokohama, all of Japan, assignors to Canon Kabushiki Kaisha, Tokyo, Japan
Filed May 27, 1993, Ser. No. 68,203
Claims priority, application Japan, May 29, 1992, 4-139094
Int. Cl.⁶ H04N *1/21; 1/46*
U.S. Cl. 358—296 **28 Claims**

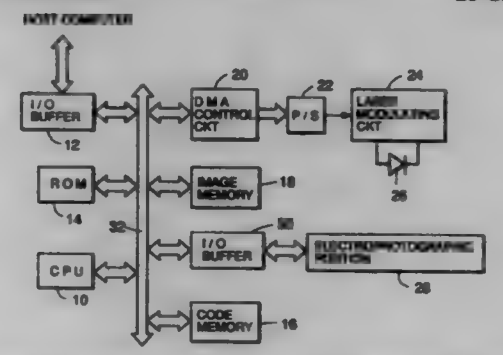

1. An image forming apparatus for forming an image, comprising:
input means for inputting image data of a first color component and image data of a second color component which differs from the first color component, the image data of the first and second color components having been converted from code data, wherein the code data is provided by code providing means;
writing means for writing into a memory the image data of the first color component;
output means for reading out the image data of the first color component which has been written in said memory and for outputting the read-out image data to a color image forming device;
means for causing said writing means to write into the memory the image data of the second color component, and for causing said output means to read out the image data of the second color component and to output the read-out image data to said color image forming device; and
means for controlling said color image forming device to form an image based on the read-out image data outputted by said output means for the first color component, and thereafter to enter a wait state until after said writing means has completed writing the image data for the second color component into the memory.

5,701,183
APPARATUS AND METHOD FOR SELECTIVE ARCHIVING OF FACSIMILE MESSAGES
Richard A. Bellemare, Oakville, and Edward G. Keplinger, Woodbury, both of Conn., assignors to Pitney Bowes Inc., Stamford, Conn.
Filed Dec. 21, 1995, Ser. No. 576,665
Int. Cl.⁶ H04N *1/00*
U.S. Cl. 358—404 **9 Claims**

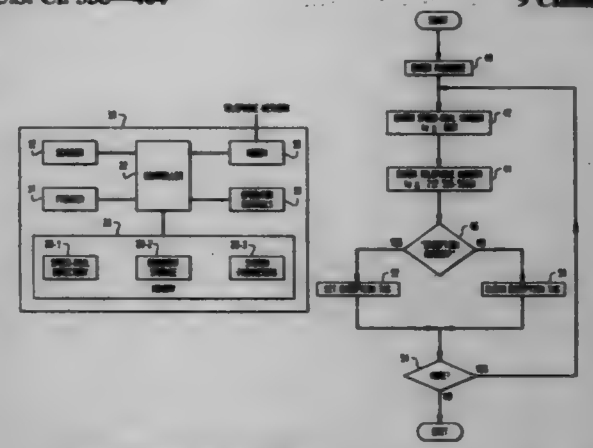

1. A facsimile system comprising:
a) a scanner for scanning documents, to generate facsimile signals representative of said documents;
b) communications means for transmitting facsimile signals representative of said scanned documents to remote stations, one of said remote stations being an archive, and for receiving facsimile signals representative of documents to be printed by said facsimile system;
c) a printer, responsive to said communications means, for printing documents representative of said received facsimile signals;
d) a memory for storing a directory of remote station identifications, buffer storage of said facsimile signals to be transmitted and said received facsimile signals, and system parameters;
e) operator input-output means for input of operator control signals and display of prompts, and
f) control means for controlling said facsimile system to;
f1) respond to certain of said operators control signals to scan a document, establish communications with a selected one of said remote stations and transmit facsimile signals representative of said scanned document to said selected remote station;
f2) respond to reception of a facsimile signal from a transmitting remote station to print a document representative of said received facsimile signal; and
f3) compare the identity of said selected remote station or said transmitting remote station with said directory of remote station identifications and retransmitting said transmitted facsimile signal or said received facsimile signal to said archive only if said remote station is not identified as an exception in said directory of remote station identifications; wherein
g) said directory is a speed dial directory, and said facsimile system prompts an operator to tag remote stations as exceptions during programming of said speed dial directory.

5,701,184
MULTI-FUNCTION MACHINE FOR COMBINING AND ROUTING IMAGE DATA

Tetsuro Motoyama, Santa Clara, Calif., assignor to Ricoh Company, Ltd., Tokyo, Japan, and Ricoh Corporation, San Jose, Calif.

Continuation of Ser. No. 377,480, Jan. 24, 1995, which is a continuation-in-part of Ser. No. 811,463, Dec. 19, 1991, Pat. No. 5,396,345. This application Jun. 25, 1996, Ser. No. 670,016

Int. Cl.⁶ H04N *1/387*

U.S. Cl. 358—450 **18 Claims**

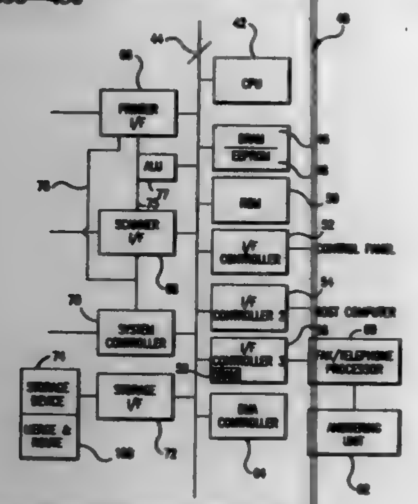

1. A multi-function machine, comprising:
means for printing information from a plurality of sources including a computer;
means for scanning pages to obtain image information;
means for transferring the image information which was obtained by the means for scanning to the means for printing, in order to copy the image information;
means for designating a type of merge destination from a plurality of merge destination types;
means for merging a first set of electronic image data with a second set of electronic image data to form merged image data; and
means for conveying said merged image data to a merge destination corresponding to the merge destination type which has been designated,
wherein:
at least one of said first set of electronic image data and said second set of electronic image data includes registered image data,
said registered image data is selected from a registered image selection menu, and
said registered image selection menu includes a confidential imprint option, a date stamp option, a date and time stamp option, and an identification option.

5,701,185
SPATIAL LIGHT MODULATOR ASSEMBLY FOR ADAPTING A PHOTOGRAPHIC PRINTER TO PRINT ELECTRONIC IMAGES

Wanda T. Reiss, and James A. Ionson, both of Lexington, Mass., assignors to Polaroid Corporation, Cambridge, Mass.

Filed Nov. 21, 1994, Ser. No. 342,824

Int. Cl.⁶ H04N *1/40*

U.S. Cl. 358—471 **19 Claims**

1. An apparatus, suitable for use with a photographic printer, for printing an image corresponding to an electronic image signal onto a photosensitive medium, where the photographic printer, when operating, projects a beam of light through a negative holder, said apparatus comprising:
image source means for transmitting the electronic image signal;
an adapter removeably insertable into the negative holder

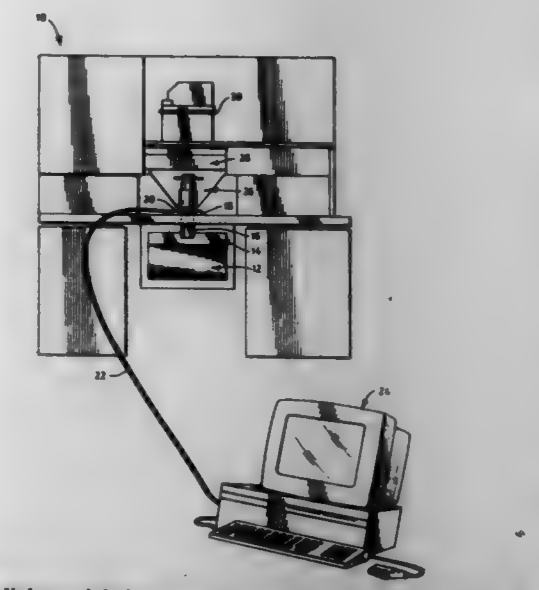

spatial light modulation means disposed within said adapter, said spatial light modulation means further electrically connected to said image source means, such that said spatial light modulation means responds to the electronic image signal and forms the image in the path of the beam of light, thereby providing image-beating light to expose the image onto the photosensitive medium; and
color filter means electrically connected to said image source means, for selectively altering a color of said beam of light such that colored image-bearing light is projected onto the photosensitive medium.

5,701,186
OPTICAL CABLE TV SYSTEM

David R. Huber, Warrington, Pa., assignor to Ciena Corporation, Linthicum, Md.

Division of Ser. No. 366,472, Dec. 30, 1994, which is a division of Ser. No. 71,263, Jun. 4, 1993, Pat. No. 5,579,143. This application Mar. 29, 1996, Ser. No. 636,901

Int. Cl.⁶ H04J *14/02*

U.S. Cl. 359—125 **2 Claims**

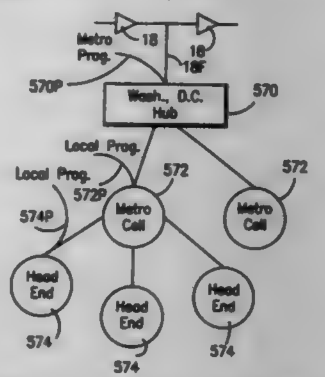

1. An optical cable television system comprising:
a plurality of lasers, each laser outputting an optical signal at a particular optical channel wavelength in an optical cable television system;
an optical combiner coupled to the plurality of lasers for receiving the optical channels from the lasers and outputting the plurality of optical channels on a single output to form a wavelength division multiplexed optical signal;
an optical fiber transmission line optically communicating with the optical coupler output at a first end and optically communicating with an optical television distribution system downstream of the optical coupler and having at least one distribution optical amplifier positioned therein, the optical television distribution system comprising;
at least one metropolitan hub having an optical path extending between the metropolitan hub and the optical fiber transmission line for carrying the plurality of optical channels from the optical fiber transmission line to the metropolitan hub;
a plurality of head ends associated with the at least one metropolitan hub and optically coupled to the metropolitan hub for receiving the plurality of optical channels from the optical hub;
an optical insertion network for optically inserting local programming coupled to the metropolitan hub, the optical insertion network comprising a reconfigurable optical add-drop multiplexer including at least one Bragg grating for selecting one or more optical carriers such that the selected optical carrier replaces a primary optical channel for the duration of the local programming and is replaced by the primary optical channel following local programming; and
a plurality of nodes associated with each head end and optically coupled to the head end for receiving the plurality of optical channels from the head end.

5,701,187
PORTABLE INPUT APPARATUS

Masatoshi Uchio, and Yuichi Yasuda, both of Fukushima-ken, Japan, assignors to Alps Electric Co., Ltd., Tokyo, Japan

Filed Dec. 13, 1995, Ser. No. 571,484

Claims priority, application Japan, Dec. 13, 1994, 6-309196

Int. Cl.⁶ H04B *10/00*

U.S. Cl. 359—143 **9 Claims**

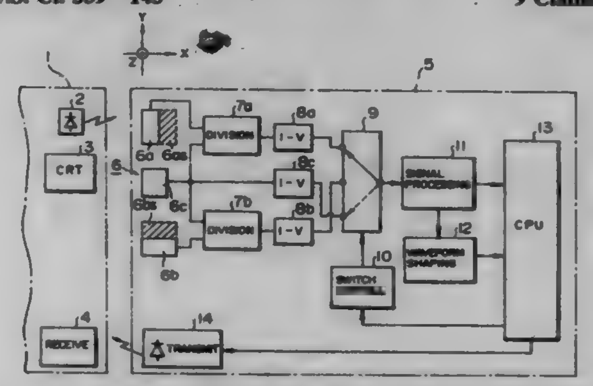

1. An portable input apparatus which is used in conjunction with a controllable information processing apparatus, the portable input apparatus comprising:
a light receiving element for receiving a base light emitted from a light emitting section of said controllable information processing apparatus, said light receiving element including:
a first detector light receiving element having a first light receiving surface which is partially covered by a first shielding member,
a second detector light receiving element having a second light receiving surface which is partially covered by a second shielding member, and
a reference light receiving element arranged between the first and second detector light receiving elements, each being of a non-split type;
an optical signal transmitting section for transmitting an optical signal to said controllable information processing apparatus;
a signal conversion section for converting an output current from each of said first, second and reference light receiving elements and for generating an output voltage corresponding to each output current;
a signal processing section for processing said output voltages and for generating relative angle data based on said output voltages; and
a control section for performing operation and calculation of said relative angle data to form coordinate data, and for transmitting the coordinate data to said optical signal transmitting section for transmission in said optical signal to said controllable information processing apparatus.

5,701,188
CHROMATIC DISPERSION COMPENSATOR AND CHROMATIC DISPERSION COMPENSATING OPTICAL COMMUNICATION SYSTEM

Masayuki Shigematsu, and Yasushi Koyano, both of Kanagawa, Japan, assignors to Sumitomo Electric Industries, Ltd., Osaka, Japan

Filed Sep. 28, 1995, Ser. No. 535,902

Claims priority, application Japan, Mar. 15, 1995, P.HEI 7-055286

Int. Cl.⁶ H04B *10/00*

U.S. Cl. 359—161 **26 Claims**

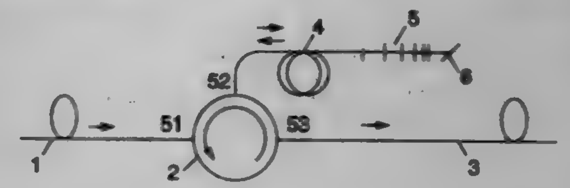

1. A chromatic dispersion compensator comprising:
optical signal directing means having first, second and third ports, for directing an optical signal input from one of said ports to another port of said ports;
an input transmission path which is connected to said first port;
an output transmission path which is connected to said third port;
a chirped grating which is connected to said second port; and
a dispersion compensating fiber which is connected to at least one of said first, second and third ports, said dispersion compensating fiber and said chirped grating having chromatic dispersion characteristics opposite to the chromatic dispersion characteristics of said input and output transmission paths;
wherein the optical signal is incident into said first port from said input transmission path, the optical signals is made to go out to said chirped grating from said second port, the optical signal is incident from said chirped grating to return to said second port, and the optical signal is made to go to said output transmission path from said third port;
wherein almost all chromatic dispersion is compensated by the dispersion compensation optical fiber, and
wherein the chirped grating is arranged so that only a wavelength-dependent component of the residual chromatic dispersion is compensated by the chirped grating, said chirped grating having a dispersion slope opposite to that of the residual chromatic dispersion and substantially equal in absolute value to the dispersion slope of the wavelength-dependent component of the residual chromatic dispersion.

5,701,189
WIRELESS DATA COMMUNICATION SYSTEM AND METHOD USING AN ELECTROLUMINESCENT PANEL

Rikki Koda, Delray Beach, and Anthony James Dolezal, West Palm Beach, both of Fla., assignors to Motorola, Inc., Schaumburg, Ill.

Filed Mar. 27, 1995, Ser. No. 411,427

Int. Cl.⁶ H04B *10/00*

U.S. Cl. 359—172 **3 Claims**

1. A system for providing wireless data communications comprising:
an electroluminescent panel having a drive signal with a frequency;
a memory for storing data; and
a frequency modulator for modulating the frequency of the drive signal of said electroluminescent panel in accordance with

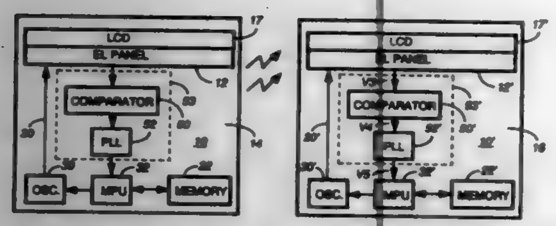

data stored in said memory to encode said data as a plurality of frequencies of said drive signal, said electroluminescent panel being responsive to said frequency modulated drive signal to emit light at a plurality of frequencies representative of said data, wherein said frequency modulator includes an oscillator that is responsive to a signal representing said stored data to provide said frequency modulated drive signal.

5,701,190
LASER SCANNER AND SCANNING LENS
Takeshi Mochizuki, and Susumu Saito, both of Ibaraki, Japan, assignors to Hitachi Koki Co., Ltd., Tokyo, Japan
Continuation of Ser. No. 191,932, Feb. 4, 1994, abandoned.
This application Oct. 5, 1995, Ser. No. 538,766
Claims priority, application Japan, Feb. 5, 1993, 5-18948
Int. Cl.⁶ G02B *26/08*
U.S. Cl. 359—205 **1 Claim**

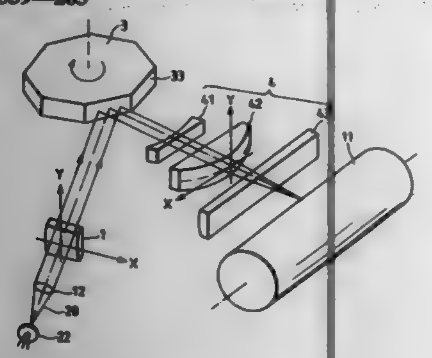

1. A laser scanner, comprising:
a laser light source for generating a laser beam;
a line image forming optical member;
a light deflector with a reflecting face which receives said laser beam from said laser light source through said line image forming optical member to form a line image on said reflecting face;
a scanning lens system which focuses a reflecting laser beam from said reflecting face of said light deflector to scan over a surface to be scanned, comprising an aspheric lens at least one surface of which has a radius of curvature in a direction normal to the scan direction which increases from the central portion to either end portion;
a cylindrical lens having a positive power and which is located in the nearest position to said surface to be scanned; and
the curvature of said aspheric lens is defined so that said reflecting face of said light deflector and said surface to be scanned have a conjugate focussing relationship in a state where said cylindrical lens is arranged at said position, and the curvature of image field is corrected by said cylindrical lens on the basis of an error in machining of the curvature of said aspheric lens.

5,701,191
OPTICAL SCANNER
Takeo Iwasaki, Nagoya, Japan, assignor to Brother Kogyo Kabushiki Kaisha, Nagoya, Japan
Filed Apr. 22, 1996, Ser. No. 635,627
Claims priority, application Japan, Apr. 21, 1995, 7-096795
Int. Cl.⁶ G02B *26/08*
U.S. Cl. 359—205 **20 Claims**

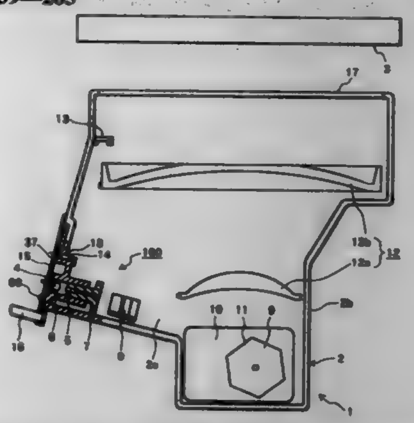

1. An optical scanning device for optically scanning a medium, the optical scanning device comprising:
a light source for emitting a light beam;
optical axis determination means for determining an optical axis, along which the light beam emitted from the light source travels;
deflection means for deflecting the light beam which has travelled along the optical axis;
optical imaging means for receiving the deflected light beam and for imaging the light beam into a beam spot on a medium to be scanned;
a housing for housing the deflection means and the optical imaging means; and
a support portion for supporting at least one of the light source and the optical axis determination means, the support portion being integrally formed with the housing.

5,701,192
THIN FILM ACTUATED MIRROR ARRAY AND METHOD OF MANUFACTURING THE SAME
Jeong-Beom Ji, and Yong-Ki Min, both of Seoul, Rep. of Korea, assignors to Daewoo Electronics Co., Ltd., Seoul, Rep. of Korea
Filed Apr. 29, 1996, Ser. No. 639,581
Claims priority, application Rep. of Korea, May 26, 1995, 95-13358; May 26, 1995, 95-13360
Int. Cl.⁶ G02B *26/08;7/182*
U.S. Cl. 359—224 **15 Claims**

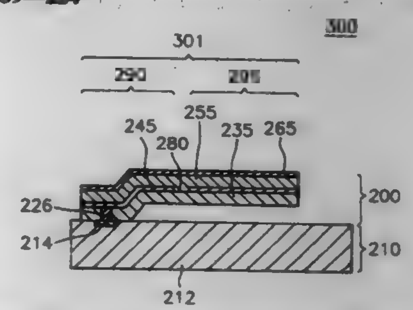

1. An array of M×N thin film actuated mirrors, wherein M and N are integers, for use in an optical projection system, the array comprising:

an active matrix including a substrate with an array of M×N pairs of connecting terminals and an array of M×N transistors, wherein the connecting terminals in each pair are electrically connected to a corresponding transistor in the array of transistors; and
an array of M×N actuating structures, each of the actuating structures having an actuating and a light reflecting portions, and including an elastic member, a pair of conduits, a second thin film electrode divided into two portions by a stripe, a thin film electrodisplacive member and a first thin film electrode, the first and the second thin film electrodes being placed on top and bottom of the thin film electrodisplacive member, respectively, the elastic member being placed below the second thin film electrode, wherein the two portions defined by the stripe in the second thin film electrode correspond to the actuating and the light reflecting portions in each of the actuating structures, respectively, the portion of the second thin film electrode corresponding to the actuating portion in each of the actuating structures is electrically connected to the transistor through the conduits and the connecting terminals, thereby functioning as a signal electrode in each of the actuating structures, and the first thin film electrode functions as a mirror and a bias electrode in each of the actuating structures.

5,701,193
OPTICAL REFLECTION MODULATOR
Paul Vogel, Steffisburg; Olivier Anthamatten, Fribourg, and Rainer Bättig, Bern, all of Switzerland, assignors to Ascom Tech AG, Bern, Switzerland
Filed Feb. 21, 1996, Ser. No. 604,433
Claims priority, application Switzerland, Feb. 21, 1995, 00 498/95
Int. Cl.⁶ G02B *26/00*
U.S. Cl. 359—290 **20 Claims**

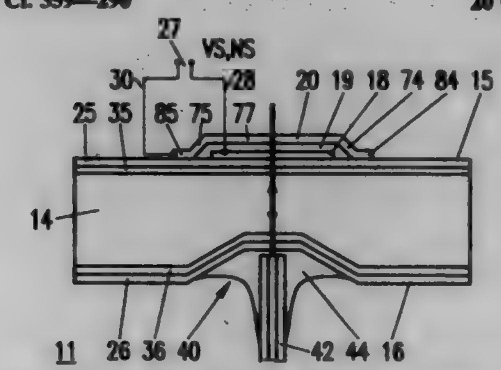

1. A reflection modulator (11) for a light beam emerging from an optical fiber (42) and re-entering the same, comprising:
a modulator unit based upon a Fabry and Perot interferometer and having two parallel reflecting layers (18, 20) one of which is mechanically displaceable by a wanted electric signal (NS), and a mechanical mounting which joins the optical fiber (42) and the modulator unit,
wherein a base block (14) is provided having two main surfaces (15, 16), and
wherein a first one (18) of said reflecting layers (18, 20) is positioned stationary on one (15) of said main surfaces (15, 16) and a second one (20) of said reflecting layers (18, 20) is arranged essentially parallel to said first one (18) of said reflecting layers and separated by an air gap (19).

5,701,194
AMPLIFIED TELECOMMUNICATION SYSTEM FOR WAVELENGTH-DIVISION MULTIPLEXING TRANSMISSIONS CAPABLE OF LIMITING VARIATIONS IN THE OUTPUT POWER
Fausto Meli, Piacenza, and Stefano Piciaccia, Milan, both of Italy, assignors to Pirelli Cavi S.p.A., Italy
Continuation of Ser. No. 506,088, Jul. 24, 1995, abandoned.
This application Mar. 19, 1996, Ser. No. 618,502
Claims priority, application Italy, Jul. 14, 1994, MI94A1535; Jul. 25, 1994, MI94A1574
Int. Cl.⁶ H01S *3/00*
U.S. Cl. 359—341 **67 Claims**

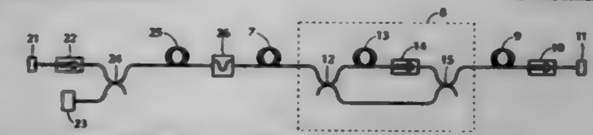

1. An optical telecommunication system comprising:
a transmitting means for supplying at least two optical signals having different wavelengths in a signal band of a predetermined bandwidth;
a receiving means;
an optical fiber line coupled to said transmitting means and interposed between the transmitting means and the receiving means for transmitting said optical signals from said transmitting means toward said receiving means, said line comprising:
at least one active-waveguide optical amplifying means disposed along and connected to the line and spontaneous signal emission in a wavelength band contiguous to said signal band arising in said line; and
an optical pre-amplifier intermediate, and coupled to, said line and said receiving means, said optical pre-amplifier comprising:
a doped optical waveguide doped with rare earth material and having first and second amplification stages for amplifying optical signals, the first amplification stage being coupled to the second amplification stage;
a means for coupling the at least two optical signals from said line to the first amplification stage;
a source of pumping energy at a pumping wavelength outside said signal band;
a means for coupling said source of pumping energy to said first amplification stage;
a differential-attenuation means located at a first predetermined position along said doped optical waveguide between the first and second amplification stages, wherein said differential-attenuation means attenuates signals in said signal band by a predetermined amount greater than the amount by which said pumping energy is attenuated;
a filtering means located at a second predetermined position, different from said first predetermined position, along said doped optical waveguide between the first and second amplification stages, wherein said filtering means attenuates the spontaneous emission signals in said band contiguous to the signal band by an amount greater than the amount by which signals in said signal band are attenuated, the amount by which said filtering means attenuates spontaneous signals being greater than a predetermined minimum and wherein said predetermined amount of attenuation by said differential-attenuation means, said predetermined minimum of the attenuation of said spontaneous signals by the filtering means and the first and second predetermined positions and said wavelength band contiguous to said signal band are selected so that variation in the range of power levels of the amplified optical signals at the output of the second amplification stage and supplied to the receiving means is not greater than 12 dB when the range of power levels of one of the signals coupled to said first amplification stage is 20 dB.

5,701,195

LIGHT SIGNAL RECEPTION APPARATUS HAVING AN IMPROVED LIGHT SURGE ELIMINATING FUNCTION

Terumi Chikama, Kawasaki, Japan, assignor to Fujitsu Limited, Kanagawa, Japan

Filed May 31, 1996, Ser. No. 658,944

Claims priority, application Japan, Jun. 5, 1995, 7-137597

Int. Cl.⁶ H01S *3/00*

U.S. Cl. 359—341 **10 Claims**

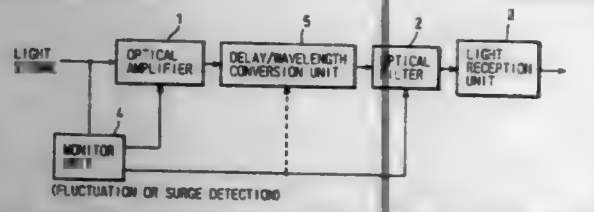

1. A light signal reception apparatus having a light surge eliminating function and provided in an optical transmission system, the apparatus comprising:

optical amplifying means for receiving a light signal and amplifying said light signal to a predetermined level to maintain an amplified light signal at a setting level;

optical filtering means operatively connected to the optical amplifying means fore eliminating a light surge and passing through the light signal;

opto-electrical converting means operatively connected to the optical filtering means for converting the light signal to an electrical signal; and

monitoring means operatively connected to the optical amplifying means for monitoring a fluctuation of the light signal, and controlling a transmission wavelength characteristic of the optical filtering means or a wavelength of the light signal in order to eliminate the light surge.

5,701,196

STEREOMICROSCOPE

Shinichi Nakamura, Hino, Japan, assignor to Olympus Optical Co., Ltd, Tokyo, Japan

Filed May 26, 1994, Ser. No. 249,845

Claims priority, application Japan, Nov. 5, 1993, 5-299136

Int. Cl.⁶ G02B *21/36;21/02;3/00;15/14*

U.S. Cl. 359—362 **9 Claims**

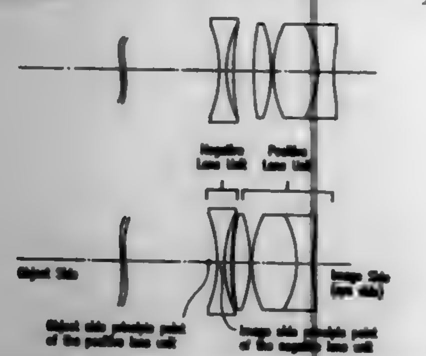

1. A stereomicroscope comprising an afocal variable focal length optical system, an imaging lens system and eyepiece lens systems, which are disposed after a single objective lens system, wherein said single objective lens system emits a parallel light bundle, and comprises, in order from the object side, a negative lens unit and a positive lens unit, and said objective lens system is configured so as to permit changing a working distance thereof by varying an airspace reserved between said negative lens unit and said positive lens unit; wherein said working distance is 150 mm at minimum but 515 mm at maximum, and wherein said objective lens system has a concave surface at a location farthest from an object to be observed.

5,701,197

SLIT LAMP MICROSCOPE PROVIDED WITH A CONFOCAL SCANNING MECHANISM

Nobuyuki Yano, Okazaki, Japan, assignor to Nidek Co., Ltd., Japan

Filed Oct. 20, 1995, Ser. No. 545,900

Claims priority, application Japan, Nov. 8, 1994, 6-300395

Int. Cl.⁶ G02B *21/06;21/00*

U.S. Cl. 359—389 **13 Claims**

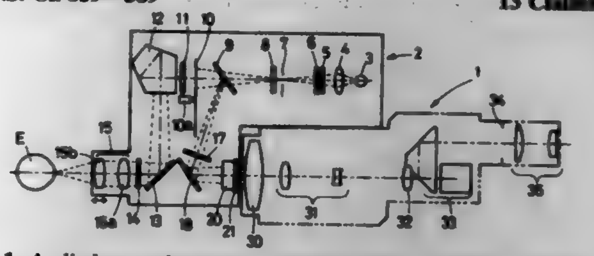

1. A slit lamp microscope provided with a confocal scanning mechanism, which includes an illumination optical system for slit illumination onto an eye to be examined and an observing optical system containing an objective lens for observation of the eye exposed to the slit illumination, the slit lamp microscope comprising:

a confocal scanning microscope unit containing an illumination optical system for illuminating a rotating circular disc provided with a plurality of pinholes and illuminating an observation plane of the eye to be examined by illumination light transmitted through the pinholes of the rotating circular disc, and a light delivery optical system for focusing the luminous flux reflected from the observation plane of the eye on said rotating circular disc and delivering it to said objective lens; and

means for locating said confocal scanning microscope unit in the front of said objective lens.

5,701,198

CONFOCAL INCIDENT LIGHT MICROSCOPE

Günter Schöppe, Jena, Germany, assignor to Carl Zeiss JENA GmbH, Jena, Germany

Filed Apr. 1, 1996, Ser. No. 625,831

Claims priority, application Germany, Mar. 31, 1995, 195 11 937.1

Int. Cl.⁶ G02B *21/06;5/04*

U.S. Cl. 359—386 **6 Claims**

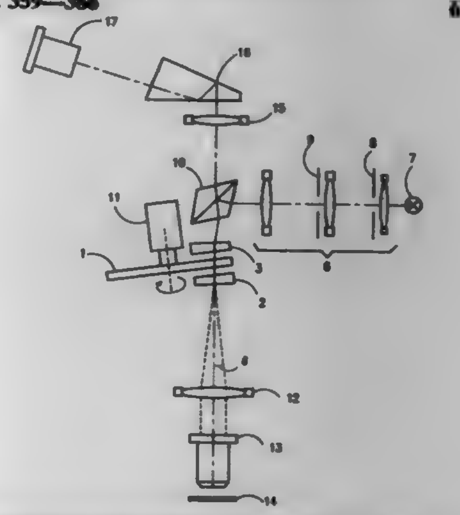

1. A confocal incident light microscope for viewing an object, the confocal incident light microscope comprising:

an illuminating device for transmitting an illuminating beam along an illuminating beam path;

a viewing optical assembly for defining a viewing beam path;

an optical unit for joining said illuminating beam path and said viewing beam path to form a common beam path;

a perforated mask arranged in said common beam path at an angle δ to a plane perpendicular to said common beam path;

an imaging optic arranged between said perforated mask and said object;

a first prism having a first wedge-shaped section arranged in said common beam path between said optical unit and said perforated mask;

said first wedge-shaped section defining a wedge angle α and having a surface essentially parallel to said perforated mask;

a second prism having a second wedge-shaped section arranged in said common beam path between said perforated mask and said imaging optic;

said second wedge-shaped section defining a wedge angle corresponding to said wedge angle α and having a surface essentially parallel to said perforated mask;

said first and second prisms being arranged in said common beam path so as to be rotated by 180° relative to each other; and,

said first and second prisms defining said wedge angle α:

$$\alpha=\delta\times n/(n-1)$$

wherein: n= index of refraction of said wedge-shaped section.

5,701,199

REAL IMAGE MODE VARIABLE MAGNIFICATION FINDER OPTICAL SYSTEM

Hideyasu Takato, Hino, Japan, assignor to Olympus Optical Co., Ltd., Tokyo, Japan

Filed May 31, 1996, Ser. No. 655,896

Claims priority, application Japan, Jun. 1, 1995, 7-135013

Int. Cl.⁶ G02B *23/00;15/14*

U.S. Cl. 359—432 **13 Claims**

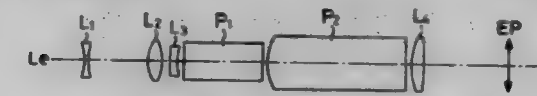

1. A real image mode variable magnification finder optical system comprising:

a finder objective for forming an optical path different from a photographic objective;

image erecting means for erecting an image formed by said finder objective; and

an eyepiece having a positive refracting power,

said finder objective including, in order from an object side, a first lens unit having a negative refracting power, a second lens unit having a positive refracting power, a third lens unit having a negative refracting power, and a fourth lens unit having a negative refracting power, so that, at least, said second lens unit and said third lens unit are movable along an optical axis to change spaces among respective lens units from said first lens unit to said fourth lens unit.

5,701,200

MONOLITHIC RELAY LENS SYSTEM PARTICULARLY SUITED FOR USE IN AN ENDOSCOPE

Richard F. Horton, Los Lunas, N. Mex., assignor to Symbiosis Corporation, Miami, Fla.

Filed Oct. 27, 1994, Ser. No. 330,369

Int. Cl.⁶ G02B *23/00*

U.S. Cl. 359—435 **21 Claims**

1. A monolithic relay lens system for transmitting an image formed by an objective lens at the distal end of an endoscope to an eyepiece at the proximal end of the endoscope, said relay lens system comprising:

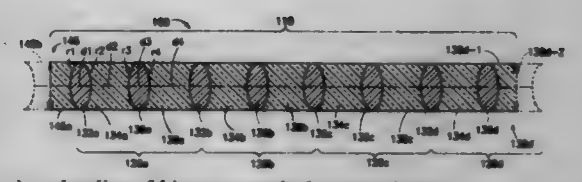

a) a plurality of biconvex optical cement lenses;

b) a plurality of first biconcave lenses made from a first polymeric material; and

c) a plurality of second biconcave lenses made from a second polymeric material, wherein

a first of said plurality of biconvex optical cement lenses is located between and bonds a first of said plurality of first biconcave lenses to a first of said plurality of second biconcave lenses,

a second of said plurality of biconvex optical cement lenses is located between and bonds said first of said plurality of second biconcave lenses to a second of said plurality of first biconcave lenses,

a third of said plurality of biconvex optical cement lenses is located between and bonds a second of said plurality of second biconcave lenses to said second of said first biconcave lenses.

5,701,201

APPARATUS FOR SCANNING DRUM INNER FACE AND METHOD OF SCANNING THEREFOR

Masahide Okazaki, Kyoto, Japan, assignor to Dainippon Screen Manufacturing Co., Ltd., Kyoto, Japan

Division of Ser. No. 353,953, Dec. 12, 1994, Pat. No. 5,504,619, which is a continuation of Ser. No. 780,355, Oct. 22, 1991, abandoned. This application Jun. 6, 1995, Ser. No. 483,566

Claims priority, application Japan, Oct. 31, 1990, 2-296690; Nov. 26, 1990, 2-324001; Aug. 29, 1991, 3-244633

Int. Cl.⁶ G02B *5/30;27/28*

U.S. Cl. 359—487 **10 Claims**

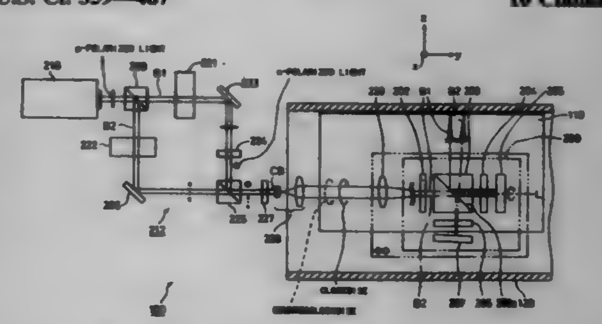

1. An optical apparatus for scanning an inner face of a cylindrical member with a light beam, comprising:

composite light beam generation means for generating a composite light beam including first and second circularly polarized light components which have opposite handedness to each other and whose principal rays coincide with each other;

conversion means for converting said first and second circularly polarized light components to respective first and second linearly polarized light components of respective first and second polarization directions perpendicular to each other;

splitting means for splitting said first and second linearly polarized light components to make a predetermined angle thereby to produce respective first and second scanning beams;
deflection means for deflecting said first and second scanning beams towards the inner face of said cylindrical member; and
rotation means for rotating said conversion, splitting and deflection means as a unit around the axis of said cylindrical member thereby to scan the inner face of said cylindrical member with said first and second scanning beams.

5,701,202
HEAD OR FACE MOUNTED IMAGE DISPLAY APPARATUS
Koichi Takahashi, Hachioji, Japan, assignor to Olympus Optical Co., Ltd., Tokyo, Japan
Filed Jul. 21, 1995, Ser. No. 505,516
Claims priority, application Japan, May 18, 1995, 7-120034
Int. Cl.⁶ G02B *27/14*
U.S. Cl. 359—631 **33 Claims**

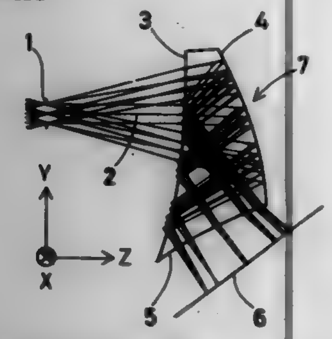

1. An optical apparatus comprising:
a device for displaying an image; and
an ocular optical system for projecting an image formed by said device for displaying an image and for leading the image to an observer's eyeball,
said ocular optical system comprising first, second and third surfaces, in which a space defined by said first, second and third surfaces is filled with a medium having a refractive index larger than 1,
said first, second and third surfaces including, in order from an observer's eyeball side toward said device for displaying an image, a first surface serving as both a refracting surface and an internally reflecting surface, a second surface serving as a reflecting surface of positive power which faces said first surface and is decentered or tilted with respect to an observer's visual axis, and a third surface serving as a refracting surface closest to said device for displaying an image, at least two of said at least three surfaces having a finite curvature radius;
wherein any one of said first, second and third surfaces is a decentered aspherical surface;
wherein any one of said first, second and third surfaces is an anamorphic surface;
wherein said optical apparatus satisfies the following condition in a case where a vertical plane containing said observer's visual axis is defined as a YZ-plane, and a horizontal plane containing said observer's visual axis is defined as an XZ-plane:

$$0.5<R_{y2}/R_{x2}<5$$

where R_{y2} is a curvature radius of said second surface in the YZ-plane, and R_{x2} is a curvature radius of said second surface in the XZ-plane.

5,701,203
ASTIGMATISM CORRECTING ELEMENT
Fumio Watanabe, Omiya, Japan, assignor to Fuji PhotoOptical Co. Ltd., Omiya, Japan
Filed Jan. 19, 1996, Ser. No. 588,722
Claims priority, application Japan, Apr. 24, 1995, 7-098457
Int. Cl.⁶ G02B *13/10;5/04*
U.S. Cl. 359—669 **4 Claims**

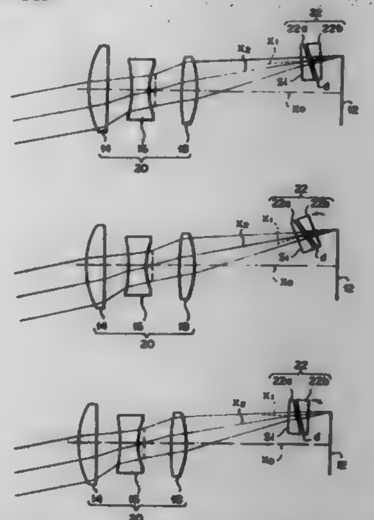

1. An image-forming optical system the combination comprising:
an astigmatism correcting element disposed between an image-forming lens and an image-forming surface in order to correct said astigmatism; and
wherein said element comprises a prism unit in which a pair of wedge-like prisms having an identical apex angle are oppositely placed in reverse to each other with a fixed predetermined air space therebetween, while an optical axis of said prism unit is tilted by a predetermined angle with respect to an optical axis of said image-forming optical system.

5,701,204
ZOOM LENS SYSTEM
Hiroyuki Matsumoto, Wakayama, Japan, assignor to Minolta Co., Ltd., Suita, Japan
Filed Jun. 23, 1995, Ser. No. 493,902
Claims priority, application Japan, Jun. 29, 1994, 6-147343
Int. Cl.⁶ G02B *15/14*
U.S. Cl. 359—684 **13 Claims**

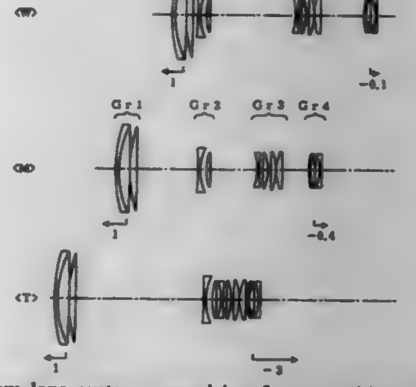

1. A zoom lens system comprising from an object side a first lens unit of positive refractive power and a second lens unit of negative refractive power, said zoom lens system further comprising a rearmost lens unit of negative refractive power on a most image side,
wherein during zooming from a shortest focal length condition to a longest focal length condition, the first lens unit is moved toward the object side so that a distance between the first and second lens units increases, and
wherein during focusing to a shorter object distance condition, the first lens unit is moved toward the object side while the rearmost lens unit is moved toward an image side, and a ratio between movement amounts of the first and rearmost lens units for focusing varies according to zooming.

5,701,205
SHIFTABLE LENS SYSTEM
Sachio Hasushita; Shuji Yoneyama; Koichi Maruyama, and Takayuki Ito, all of Tokyo, Japan, assignors to Asahi Kogaku Kogyo Kabushiki Kaisha, Tokyo, Japan
Division of Ser. No. 355,272, Dec. 12, 1994, Pat. No. 5,539,576, which is a continuation of Ser. No. 825,106, Jan. 24, 1992, abandoned. This application Mar. 30, 1995, Ser. No. 414,126
Claims priority, application Japan, Jan. 29, 1991, 3-094647; Jan. 29, 1991, 3-094648
Int. Cl.⁶ G02B *15/14;27/64*
U.S. Cl. 359—691 **21 Claims**

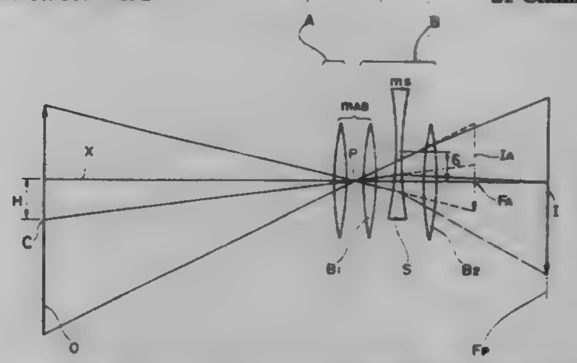

1. A shiftable zoom lens system for performing shift photography, the lens system having at least two lens groups including a variable power lens group, which are moved during zooming, wherein at least a part of a shiftable lens group located in front of said variable power lens group is shiftable in a direction perpendicular to a principal optical axis thereof so that an object to be photographed, having a center deviated from the principal optical axis of said variable power lens group, can be formed on a film plane with an image center that is positioned on the principal optical axis of said variable power lens group.

5,701,206
ROTARY FEED MECHANISM
Takamitsu Sasaki, and Hiroshi Nomura, both of Tokyo, Japan, assignors to Asahi Kogaku Kogyo Kabushiki Kaisha, Tokyo, Japan
Filed Jun. 28, 1996, Ser. No. 672,337
Claims priority, application Japan, Jun. 30, 1995, 7-166442
Int. Cl.⁶ G02B *15/14;7/02*
U.S. Cl. 359—704 **24 Claims**

14. A rotary feed mechanism of a camera, said rotary feed mechanism comprising:
a first barrel provided with multiple-female threads in an inner surface of said stationary barrel;
a second barrel coaxially and movably insertable in said first barrel, said second barrel provided with multiple-male threads to engage said multiple-female threads on a predetermined surface portion of said second barrel;
idling means, provided on said first barrel, for substantially preventing said second barrel from advancing in said optical axis direction with respect to said first barrel only when said second barrel is being assembled in a predetermined initial position with respect to said first barrel.

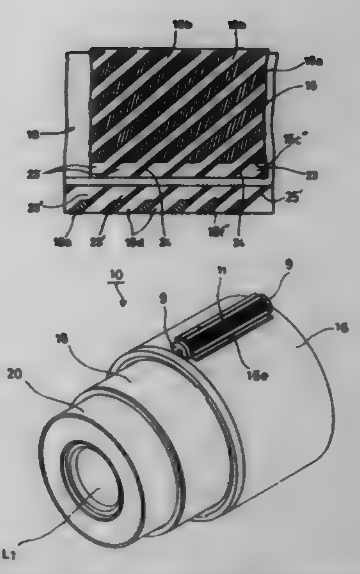

5,701,207
CAMERA WITH A FIXED FOCAL LENGTH LENS
Yuko Waketa, and Nobuyoshi Mori, both of Hachioji, Japan, assignors to Konica Corporation, Japan
Filed Dec. 22, 1995, Ser. No. 577,411
Claims priority, application Japan, Dec. 28, 1994, 6-337573; Mar. 16, 1995, 7-083440
Int. Cl.⁶ G02B *13/18*
U.S. Cl. 359—717 **17 Claims**

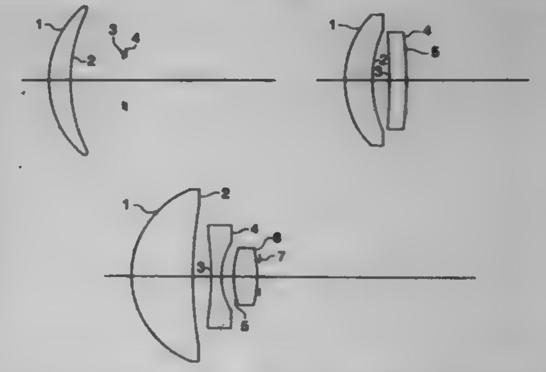

1. A camera for forming an image of an object on a rolled film at a picture plane located at a predetermined position in said camera, said film having a width of 24 mm, said camera comprising:
a photographing lens wherein a convex surface thereof faces said object and satisfies:

$$18 \leqq f \leqq 32 \text{ and}$$

$$f^2/90 \leqq F \leqq 16$$

wherein f is the focal length of said photographing lens and F is the F number of said photographing lens;
at least one diaphragm; and
wherein said picture plane has a picture frame satisfying:

$$23 \leqq L \leqq 32 \text{ and}$$

$$1.5 \leqq L/S \leqq 6.5$$

wherein L (mm) is the long dimension of said picture frame, S (mm) is the short dimension of said picture frame, and said image of said object is formed on said picture plane through said photographing lens and said at least one diaphragm.

5,701,208
CLUTCH APPARATUS FOR ZOOM LENS BARREL
Norio Sato, and Hitoshi Tanaka, both of Tokyo, Japan, assignors to Asahi Kogaku Kogyo Kabushiki Kaisha, Tokyo, Japan
Filed Oct. 6, 1995, Ser. No. 540,539
Claims priority, application Japan, Oct. 7, 1994, 6-270708
Int. Cl.⁶ G02B *7/02*
U.S. Cl. 359—822 **25 Claims**

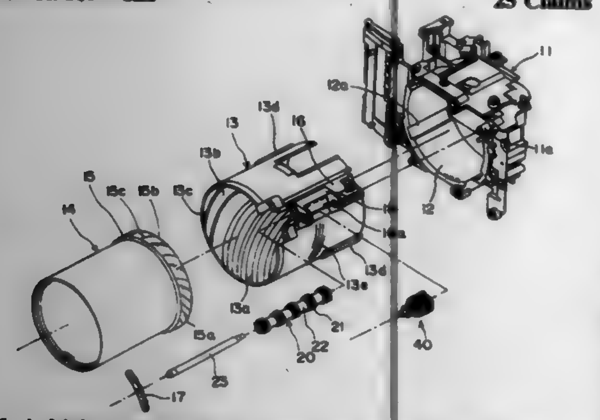

1. A driving apparatus for a zoom lens barrel, comprising:
a driving ring for moving a lens system;
means for supporting said driving ring for movement along an optical axis of said lens system;
a gear train supported by said supporting means;
a power source provided in a camera body,
means for transmitting torque generated by said power source to said driving ring, said torque transmitting means including said gear train; and
means for disconnecting a torque transmission path from the power source to the driving ring if a torque above a predetermined value is applied to said driving ring, said disconnecting means being disposed between a stationary block, which is part of the camera body, and a securing ring of a lens barrel supported in the stationary block.

5,701,209
LENS BARREL HAVING A MANUALLY FOCUSING RING
Koushi Yoshibe, and Hideo Kanno, both of Chiba, Japan, assignors to Nikon Corporation, Tokyo, Japan
Filed Nov. 20, 1996, Ser. No. 754,088
Claims priority, application Japan, Nov. 21, 1995, 7-302538; Nov. 21, 1995, 7-302605; Nov. 21, 1995, 7-302696; Nov. 21, 1995, 7-302716
Int. Cl.⁶ G02B *15/14;* **G03B** *1/18*
U.S. Cl. 359—823 **13 Claims**

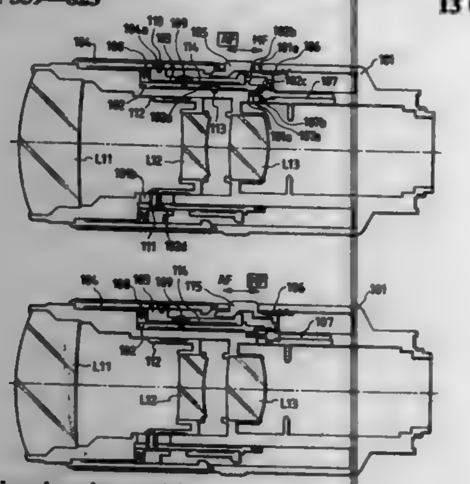

10. A lens barrel comprising:
a manual focusing ring which is rotatable about an optical axis so as to attain a manual focusing operation;
a focusing rotary cylinder which defines a position, in an optical axis direction, of a focusing optical system, and is rotatable about the optical axis;
a focusing lock member which is arranged on said manual focusing ring, is rotatable together with said manual focusing ring upon rotation of said manual focusing ring, and holds a focusing state; and
a switch member for switching a focusing operation between the manual focusing operation and an auto-focusing operation,
wherein when the focusing operation is switched to the auto-focusing operation, said manual focusing ring is not rotated by the auto-focusing operation, and is manually rotatable.

5,701,210
ACHROMATIC OPTICAL SYSTEM FOR BEAM TRANSFORMATION AND OPTICAL DISK APPARATUS USING THE SAME
Katsura Ohtaki, Tokyo, Japan, assignor to Nikon Corporation, Tokyo, Japan
Continuation of Ser. No. 163,594, Dec. 7, 1993, abandoned, which is a continuation of Ser. No. 20,864, Feb. 19, 1993, abandoned, which is a continuation of Ser. No. 871,566, Apr. 17, 1992, abandoned, which is a continuation of Ser. No. 701,181, May 16, 1991, abandoned. This application Oct. 27, 1994, Ser. No. 330,112
Claims priority, application Japan, May 18, 1990, 2-126912
Int. Cl.⁶ G02B *5/04;7/18;5/06;13/10*
U.S. Cl. 359—831 **28 Claims**

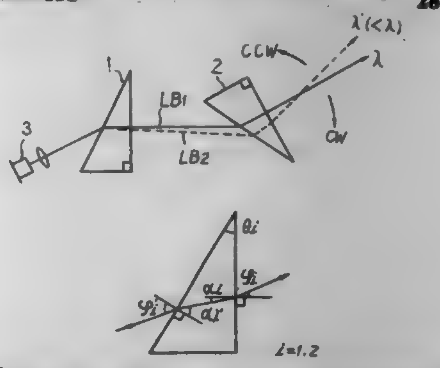

1. An achromatic optical system for beam transformation which is arranged in an optical path traversed by a beam emitted from a light source to reach a surface to be irradiated, said system comprising:
first simplex prism made of a single material and arranged on the side of said light source and a second simplex prism made of a single material and arranged on the side of said surface to be irradiated;
said first prism being constructed in such a manner that an incident angle of said beam incident on said first prism from said light source is greater than an exit angle of said beam emerging from a beam exit surface of said first prism so as to expand the width of said beam passed through said first
said second prism being constructed in such a manner that an incident angle of said beam incident on a beam entrance surface of said second prism from said beam exit surface of said first prism is greater than an exit angle of said beam emerging from said second prism so as to expand the width of said beam passed through said second prism,
said first prism and said second prism being different in dispersion from each other and being arranged apart from each other to form a space between said beam exit surface of said first prism and said beam entrance surface of said second prism,
said first prism and said second prism being further arranged in such a manner that a beam magnification of said first prism is equal to or smaller than that of said second prism, that the beam incident angle of said first prism is smaller than the beam incident angle of said second prism, and that the beam exit angle of said first prism and the beam exit angle of said second prism are both selected to be zero degrees,

said first prism and said second prism being construted in such a manner that the refractive index of said first prism is larger than that of said second prism, that the dispersion δn_1 of said first prism and the dispersion δn_2 of said second prism are selected to satisfy the expression $\delta n_2/\delta n_2>1$, and that the vertical angle of said first prism is smaller than that of said second prism,
said beam exit surface of said first prism and said beam entrance surface of said second prism being inclined relative to each other, and
said first and second prisms being further constructed so as to satisfy a condition determined by the following equation

$$\frac{\delta n_1}{\delta n_2} = m_2 \frac{\dfrac{\sin\theta_2}{\cos\left[\theta_2 + \sin^{-1}\left(\dfrac{1}{n_2}\sin\phi_2\right)\right]\cdot\cos\phi_2}}{\dfrac{\sin\theta_1}{\cos\left[\theta_1 + \sin^{-1}\left(\dfrac{1}{n_1}\sin\phi_1\right)\right]\cdot\cos\phi_1}}$$

where
n_1=the refractive index of the first prism
n_2 the refractive index of the second prism
δ_{n1}=the dispersion of the first prism
δ_{n2}=the dispersion of the second prism
θ_1=the vertical angle of the first prism
θ_2=the vertical angle of the second prism
ϕ_1=the exit angle of the beam from the first prism
ϕ_2=the exit angle of the beam from the second prism
m_2=the magnification of the beam by the second prism.

5,701,211
VEHICLE MIRROR ADJUSTMENT GEAR TRAIN
William Perry, Palestine, and Kerry Helmer, Hollandsburg, both of Ohio, assignors to United Technologies Automotive Systems, Inc., Detroit, Mich.
Filed Mar. 31, 1995, Ser. No. 415,042
Int. Cl.⁶ G02B *7/182;* **H02K** *7/10*
U.S. Cl. 359—873 **20 Claims**

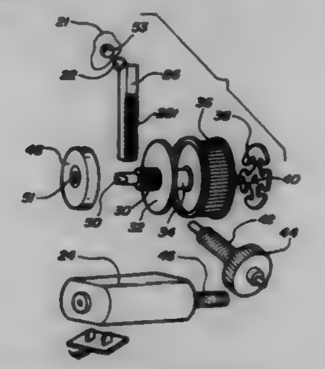

1. A mirror adjustment system comprising:
a pair of adjustment members, each including a surface formed with gear teeth extending along one face, such that said adjustment members each function as a rack;
a gear train for each of said adjustment members, comprising:
a pinion gear engaged with said teeth of said adjustment member, said pinion gear being connected to be driven by a motor to move said adjustment member;
a clutch drive gear adapted to be rotated by said motor, said clutch drive gear including a friction face engaged with a clutch disk, said clutch disk being fixed to rotate with said pinion gear; and
a bias force holding said clutch drive gear friction face in contact with said clutch disk such that upon rotation of said clutch drive gear by said motor, said clutch disk and said pinion gear are driven to rotate, but when resistance to rotation overcomes said bias force, one of said clutch drive gear and said clutch disk can rotate relative to the other.

5,701,212
DIGITAL TAPE RECORDER HAVING SYNC DETECTION BASED ON A CORRELATION BETWEEN EXTRACTED SYNC AND ID FIELDS
Hiroshi Tajima, Kanagawa, Japan, assignor to Sony Corporation, Tokyo, Japan
Filed Feb. 2, 1996, Ser. No. 596,438
Claims priority, application Japan, Feb. 3, 1995, 7-039123
Int. Cl.⁶ G11B *5/09*
U.S. Cl. 360—51 **7 Claims**

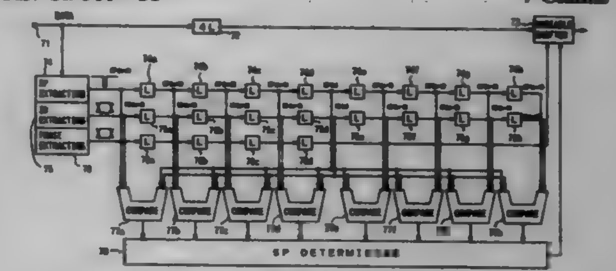

1. A recording and reproducing apparatus for recording and reproducing digital data to and from a tape shaped recording medium, comprising:
modulating means for modulating the digital data;
adding means for adding a sync pattern SP and an ID pattern ID to each block of data that is output from said modulating means at predetermined intervals, wherein said adding means sets a value for each ID pattern ID according to a predetermined correlation between a position of an mth ID pattern ID(n+m) with respect to an nth ID pattern ID(n) and a distance from an nth sync pattern SP(n) to an mth sync pattern SP(n+m);
recording means for recording output data of said adding means to the tape shaped recording medium;
reproducing means for reproducing data from the tape shaped recording medium;
detecting means for detecting from a pattern of reproduced sync patterns a distance L between sync patterns in said pattern, and for detecting as valid an Mth reproduced sync pattern SP(n+M) when a value of a respective Mth reproduced ID pattern ID(n+M) at a position M with respect to said nth ID pattern ID(n) is equal to the value of said mth ID pattern ID(n+m) at a position m corresponding to said position M and at a distance mL set according to said predetermined correlation; and
demodulating means for demodulating the reproduced data corresponding to the detected sync patterns.

5,701,213
SYMMETRICAL RESISTIVE TRANSDUCER BIASING CIRCUIT AND METHOD
Scott Warren Cameron, Milpitas, and Axel Alegre de La Soujeole, Scotts Valley, both of Calif., assignors to SGS-Thomson Microelectronics, Inc., Carrollton, Tex.
Continuation of Ser. No. 366,792, Dec. 30, 1994, abandoned. This application Sep. 12, 1996, Ser. No. 707,655
Int. Cl.⁶ G11B *5/09;5/03;5/02*
U.S. Cl. 360—66 **16 Claims**

1. A method for reading magnetic media, comprising the steps of:
(a.) positioning a magnetoresistive element in proximity to a moving magnetic medium;
(b.) driving a regulated bias current through said magnetoresistive element, using
a first control loop which is connected to differentially drive a first current generator which is connected to a first terminal

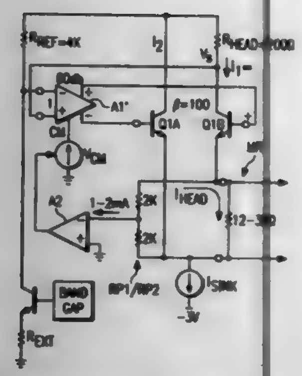

of said magnetoresistive element and a second current generator which is connected to a second terminal of said magnetoresistive element, and

a third current generator, which supplies bias current to said second terminal of said magnetoresistive element; said third generator providing current which is opposite to those supplied by said first and second generators;

(c.) biasing said magnetoresistive element, with respect to a potential of said magnetic medium, so that

one third of said magnetoresistive element is at a potential which is higher than said potential of said magnetic medium and

one third of said magnetoresistive element is at a potential which is lower than said potential of said magnetic medium;

said biasing step using a second control loop which is connected to control a bias supply to said first control loop; and

(d.) sensing variation in the voltage across said magnetoresistive element.

5,701,214

TAPE LOADING DEVICE IN MAGNETIC RECORDING/PLAYBACK APPARATUS THAT CONTROLS LOADING BASED ON CALCULATED REEL INERTIA AND TAPE POSITION

Atsushi Inoue, Chigasaki; Nobuyuki Kaku, and Takashi Sasaki, both of Yokohama, all of Japan, assignors to Hitachi, Ltd., Tokyo, Japan

Filed Jun. 3, 1992, Ser. No. 893,072

Claims priority, application Japan, Jun. 3, 1991, 3-157411

Int. Cl.[6] G11B *15/665*

U.S. Cl. 360—71 **4 Claims**

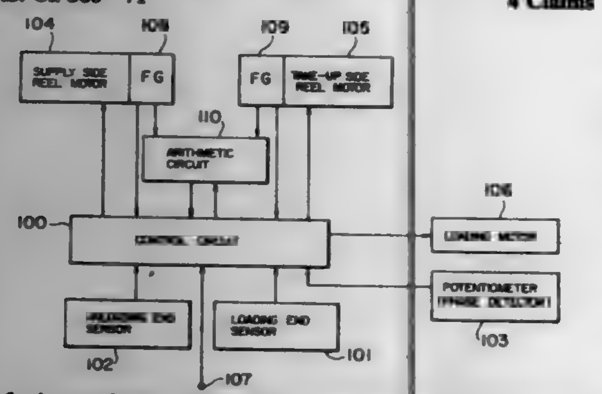

1. A tape loading device for a magnetic recording/playback apparatus, said apparatus adapted for insertion thereinto of a tape cassette containing a magnetic tape, said tape loading device comprising:

tape guides for defining a tape travel path,

a tape loading mechanism for controlling said tape guides to move a tape out of a tape cassette which has been inserted into the magnetic recording/playback apparatus, to the tape travel path, and back from the tape travel path into the tape cassette,

a loading motor for driving said tape loading mechanism,

a phase detector for detecting the operational phase of said tape loading mechanism,

a reel motor for applying back tension to the tape,

detection means for detecting the rotating direction and the rotation speed of each tape reel of the tape cassette,

first calculation means responsive to the values of rotating direction and rotation speed detected by said detection means and the operational phase detected by said phase detector, or calculating a value of inertia for each tape reel,

second calculation means responsive to the operational phase detected by said phase detector, for calculating the speed and acceleration of drawing-out or taking up of the tape, and

control means responsive to the calculated inertia, the operational phase, and the calculated speed and acceleration, for controlling said reel motor to control tension on the tape.

5,701,215

TAPE CASSETTE LOADING APPARATUS OF TAPE RECORDER INCLUDING A SPRING MEMBER FOR BIASING A CASSETTE TOWARDS REEL TABLES

Young-yun Seol, Suwon, Rep. of Korea, assignor to Samsung Electronics Co., Ltd., Kyungki-do, Rep. of Korea

Filed May 15, 1996, Ser. No. 647,833

Claims priority, application Rep. of Korea, Nov. 23, 1995, 95-35158

Int. Cl.[6] G11B *15/675*

U.S. Cl. 360—96.5 **8 Claims**

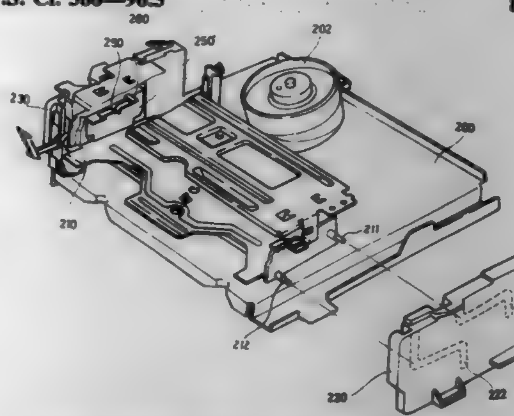

1. A tape cassette loading apparatus of a tape recorder, comprising:

a deck member having reel tables on which a tape cassette is seated;

a holder movably mounted with respect to said deck member and for receiving the tape cassette, said holder having a bottom wall and a pair of side walls substantially perpendicular thereto;

means for guiding said holder from an initial position of the tape cassette to a seated position where the tape cassette is seated on said reel tables;

a movement unit for moving said holder; and

means for elastically biasing the tape cassette toward said reel tables when the tape cassette is at the seated position,

wherein said biasing means includes a leaf spring member with one end fixed on one of said side walls of said holder, and a stop installed on the one of said side walls of said holder at a predetermined position on an elastic deformation path of said leaf spring member so that when the tape cassette is seated on said reel tables, a part of said leaf spring member presses an upper surface of the tape cassette while another end of said leaf spring member is supported by said stop.

5,701,216

SHUTTER MECHANISM FOR DISK DRIVE CARTRIDGE INSERTION OPENING

Hiroshi Yamamoto; Suguru Takishima, and Shimpei Shinozaki, all of Tokyo, Japan, assignors to Asahi Kogaku Kogyo Kabushiki Kaisha, Tokyo, Japan

Filed Feb. 8, 1996, Ser. No. 599,339

Claims priority, application Japan, Feb. 21, 1995, 7-056570; May 22, 1995, 7-146724

Int. Cl.[6] G11B *17/04*

U.S. Cl. 360—99.02 **23 Claims**

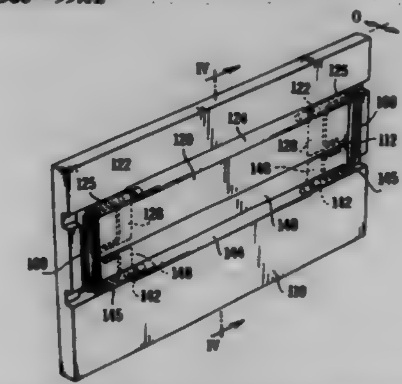

14. A shutter mechanism for a disk drive, comprising:

a housing having an insertion opening for receiving a disk cartridge, said insertion opening being formed in a vertical face of said housing;

first and second shutter leaves, swingably supported to close said insertion opening when said leaves are in a vertical position with respect to said housing; and

at least one spring member, said spring member including:

first and second resilient twistable portions coaxial with swinging axes of said first and second shutter leaves, respectively;

a connecting portion connecting said first and second resilient twistable portions; and

first and second arm portions extending within said first and second shutter leaves from said first and second twistable portions toward swinging ends of said first and second shutter leaves, respectively,

wherein said first and second arm portions move with said first and second shutter leaves away from said vertical position, whereby said first and second resilient twistable portions generate biasing force to return said first and second shutter leaves to said vertical position.

5,701,217

DISK CHUCKING MECHANISM AND DRIVE PIN STRUCTURE HAVING CHUCKING LEVER MOVABLE IN TWO DEGREES OF FREEDOM

Hideya Yokouchi, Nagano-ken, Japan, assignor to Seiko Epson Corporation, Tokyo, Japan

Continuation of Ser. No. 325,937, Oct. 19, 1994, abandoned. This application Jul. 31, 1996, Ser. No. 690,940

Claims priority, application Japan, Oct. 20, 1993, 5-262677

Int. Cl.[6] G11B *17/022*

U.S. Cl. 360—99.05 **39 Claims**

1. A disk chucking mechanism for rotating a disk having a disk hub with a central hole and a drive hole offset from the central hole, said disk chucking mechanism comprising:

a rotatable spindle inserted into said central hole of said disk hub, said rotatable spindle extending in an axial direction;

a rotatable member attached to said spindle for rotation with said spindle, said rotating member extending in a plane substantially perpendicular to said axial direction and including a positioning opening; and

an elongated chucking lever located entirely within said positioning opening and including:

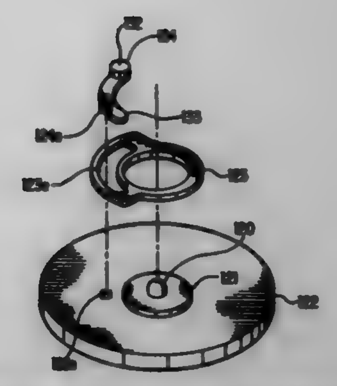

a first chucking lever end and a second chucking lever end, said chucking lever being freely movable in two degrees of freedom including translational and rotational directions in said plane within a specified range controlled by said positioning opening, said positioning opening defining at least one precisely located positioning surface which contacts said second chucking lever end during rotation of the rotating member;

a drive pin located at said first chucking lever end, said drive pin having a first end inserted into said drive hole, and a second end located opposite from said first end, being engaged with said rotating member;

a movement restriction member located on a surface of said chucking lever opposite said rotating member that restricts movement of the chucking lever in said axial direction so that said chucking lever is not movable in said axial direction; and

an anti-disengagement member located on a surface of said chucking lever opposite said rotating member that prevents said chucking lever from disengaging from said rotating member.

5,701,218

FLEX ON SUSPENSION DESIGN MINIMIZING SENSITIVITIES TO ENVIRONMENTAL STRESSES

Zine-Eddine Boutaghou, St. Paul, Minn., assignor to Seagate Technology, Inc., Scotts Valley, Calif.

Filed Sep. 11, 1996, Ser. No. 712,276

Int. Cl.[6] G11B *5/60;21/21*

U.S. Cl. 360—104 **18 Claims**

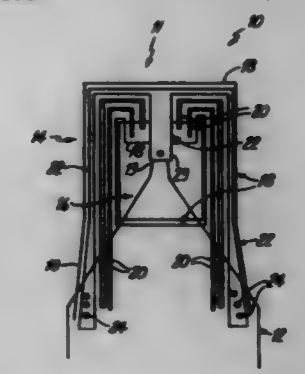

1. A flexure for supporting a magnetic head carrying slider, the flexure comprising:

a load beam; and

a flexible circuit comprising:

a carrier material;

a plurality of electrical traces supported by the carrier material for electrically coupling to the magnetic head carried by the slider; and

a gimbal insert member supported by the carrier material in a position substantially coplanar with the plurality of electrical traces, wherein the gimbal insert member is mechanically coupled to the load beam and to the slider such that the gimbal insert member supports the slider for gimbaled motion relative to the load beam.

5,701,219

SPACER FOR PROVIDING SUPPORT AND A TRANSDUCER PARKING STRUCTURE IN A DISK DRIVE ASSEMBLY

Mathew Kayhan Shafe', Campbell, Calif., assignor to International Business Machines, Armonk, N.Y.

Division of Ser. No. 363,463, Dec. 23, 1994, Pat. No. 5,590,006. This application Aug. 13, 1996, Ser. No. 689,750

Int. Cl.^{6} G11B *5/54*

U.S. Cl. 360—105 — 28 Claims

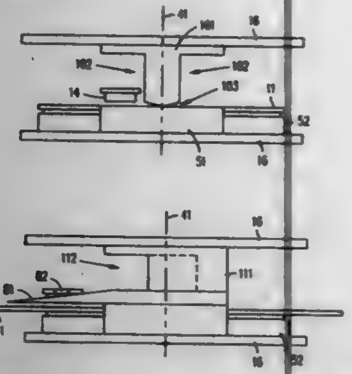

1. A spacer structure for use with a disk drive assembly having a housing, a rotatable storage disk, and an actuator assembly for positioning a transducer relative to the disk, comprising:

a base; and

a support structure extending from the base in the direction of the disk and adapted for contact with a substantially planar region at the center of the disk, the support structure including a parking structure for receiving a transducer.

5,701,220

MAGNETIC DISK DRIVE

Hiroshi Koriyama, Tokyo, Japan, assignor to NEC Corporation, Tokyo, Japan

Division of Ser. No. 389,746, Feb. 14, 1995, which is a continuation of Ser. No. 993,851, Dec. 21, 1992, abandoned. This application May 30, 1995, Ser. No. 453,103

Claims priority, application Japan, Dec. 20, 1991, 3-355195

Int. Cl.^{6} G11B *21/08*

U.S. Cl. 360—106 — 3 Claims

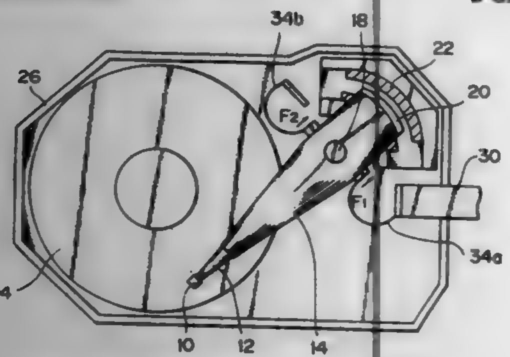

1. A magnetic disk drive comprising:

a base;

a magnetic head facing a magnetic disk;

a suspension supporting said magnetic head;

a pivotably movable carriage supporting said suspension; and

a flexible printed circuit (FPC) affixed at one end to said pivotably movable carriage and at the other end to said base for transferring signals between said magnetic head and an external control circuit, an additional FPC of substantially identical configuration being located at the other side of said carriage such that tensions generated by said pair of opposed FPCs substantially cancel each other.

5,701,221

MAGNETORESISTIVE THIN-FILM MAGNETIC HEAD AND METHOD OF FABRICATION THEREOF

Akira Taniyama, Odawara; Makoto Morijiri, Kanagawa-ken; Haruko Tanaka; Isamu Yuito, both of Odawara; Eiji Ashida, Hitachiota; Hiroaki Koyanagi, Hadano; Hideo Tanabe, Chigasaki, and Tetsuo Kobayashi, Kanagawa-ken, all of Japan, assignors to Hitachi, Ltd., Tokyo, Japan

Filed Apr. 5, 1995, Ser. No. 416,653

Claims priority, application Japan, Apr. 6, 1994, 6-068782; Apr. 18, 1994, 6-078755; Apr. 26, 1994, 6-088692

Int. Cl.^{6} G11B *5/39*

U.S. Cl. 360—113 — 6 Claims

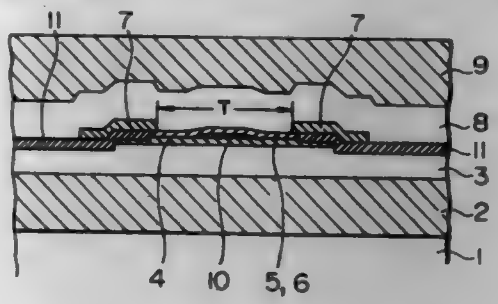

1. A magnetoresistive thin-film magnetic head comprising:

a lower shield film provided on a substrate;

a magnetoresistive film for converting a magnetic signal from a recording medium into an electrical signal using the magnetoresistive effect;

a magnetic-domain-controlling noise-suppression film provided under said magnetoresistive film for controlling the magnetic domain of the magnetoresistive film;

an electrode film covering the upper peripheral portion of the magnetoresistive film and supplying a signal detection current to the magnetoresistive film for detecting the converted electrical signal;

an upper shield film provided above the electrode film and the magnetoresistive film;

an upper insulating film inserted between the upper shield film and the combination of the magnetoresistive film and the electrode film for insulating the magnetoresistive film and the electrode film from the upper shield film;

a lower insulating film inserted between the lower shield film and the combination of the magnetoresistive film, the electrode film and the magnetic-domain-controlling noise-suppression film for insulating the magnetoresistive film, the electrode film and the magnetic-domain-controlling noise-suppression film from the lower shield film; and

an insulating film inserted between the electrode film and the lower insulating film;

wherein a first portion of the lower insulating film that is not right under the magnetic-domain-controlling noise-suppression film has a thickness that is less than that of a second portion of the lower insulating film that is right under the magnetic-domain-controlling noise-suppression film, wherein a first portion of the magnetic-domain-controlling noise-suppression film that is not right under the magnetoresistive film has a thickness that is less than that of a second portion of the magnetic-domain-controlling noise-suppression film that is right under the magnetoresistive film, and wherein said insulating film extends contiguously over the first portion of said lower insulating film and over a part of the first portion of said magnetic-domain-controlling noise-suppression film.

5,701,222

SPIN VALVE SENSOR WITH ANTIPARALLEL MAGNETIZATION OF PINNED LAYERS

Hardayal Singh Gill, Portola Valley, and Bruce A. Gurney, Santa Clara, both of Calif., assignors to International Business Machines Corporation, Armonk, N.Y.

Filed Sep. 11, 1995, Ser. No. 526,648

Int. Cl.^{6} G11B *5/39*

U.S. Cl. 360—113 — 10 Claims

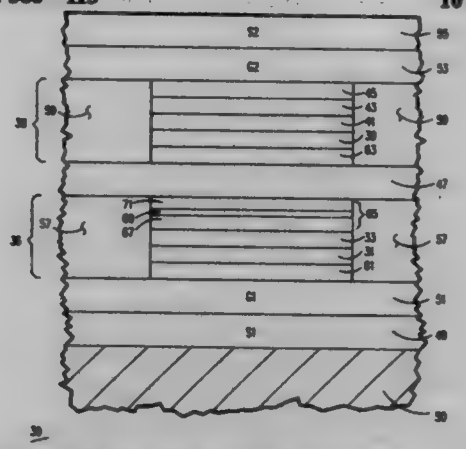

1. A magnetic disk recording system comprising:

a magnetic storage medium having a plurality of tracks for recording of data;

a magnetic transducer maintained in a closely spaced position relative to said magnetic storage medium during relative motion between said magnetic transducer and said magnetic storage medium, said magnetic transducer including a magnetoresistive read sensor comprising:

a first and a second layered structure, said first and second layered structure separated by a nonmagnetic antiferromagnetic spacer layer, said spacer layer having a high electrical resistivity;

each of said layered structures comprising free and pinned layers of ferromagnetic material separated by a layer of nonmagnetic material, said first layered structure pinned layer further including a first and second layer of ferromagnetic material separated by an antiferromagnetic nonmagnetic coupling layer;

a layer of antiferromagnetic material in contact with said second layered structure pinned layer for fixing the magnetization direction of said second layered structure pinned layer, the magnetization in said layer of antiferromagnetic material being in parallel with the magnetization in said nonmagnetic antiferromagnetic spacer layer;

said magnetization direction of said second layer of ferromagnetic material in said first layered structure pinned layer being fixed by said nonmagnetic antiferromagnetic spacer layer in a direction antiparallel to the magnetization direction of said second layered structure pinned layer and said magnetization direction of said first layer of ferromagnetic material in said first layered structure pinned layer being fixed in a direction parallel to the magnetization direction of said second layered structure pinned layer;

means for producing a current flow through said magnetoresistive sensor; and

said magnetoresistive sensor producing variations in its resistivity in response to an external magnetic field due to rotation of the magnetization in said free layers of ferromagnetic material in each of said layered structures;

actuator means coupled to said magnetic transducer for moving said magnetic transducer to selected tracks on said magnetic storage medium; and

detection means coupled to said magnetoresistive read sensor for detecting resistance changes responsive to magnetic fields representative of data bits recorded in said magnetic storage medium intercepted by said magnetoresistive sensor.

5,701,223

SPIN VALVE MAGNETORESISTIVE SENSOR WITH ANTIPARALLEL PINNED LAYER AND IMPROVED EXCHANGE BIAS LAYER, AND MAGNETIC RECORDING SYSTEM USING THE SENSOR

Robert Edward Fontana, Jr., San Jose; Bruce Alvin Gurney, Santa Clara; Tsann Lin, Saratoga; Virgil Simon Speriosu, San Jose; Ching Hwa Tsang, Sunnyvale, and Dennis Richard Wilhoit, Morgan Hill, all of Calif., assignors to International Business Machines Corporation, Armonk, N.Y.

Continuation of Ser. No. 497,324, Jun. 30, 1995, abandoned. This application Aug. 23, 1996, Ser. No. 697,396

Int. Cl.^{6} G11B *5/39*

U.S. Cl. 360—113 — 20 Claims

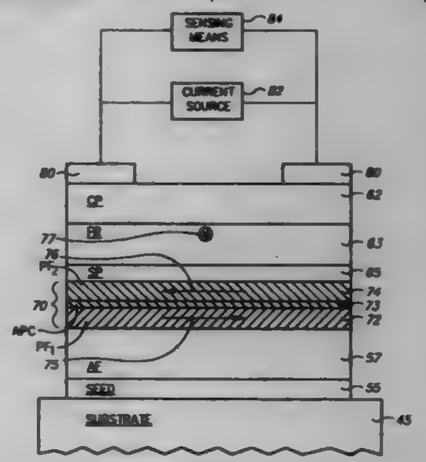

19. A spin valve magnetoresistive sensor of the inverted type having two uncoupled ferromagnetic layers separated by a nonmagnetic metallic layer in which the magnetization of one of the ferromagnetic layers is pinned by an antiferromagnetic layer that is formed directly on and in contact with a substrate supporting the sensor, the inverted spin valve sensor comprising:

a substrate;

a seed layer formed on the substrate;

an exchange bias layer of antiferromagnetic material selected from the group consisting of nickel-oxide, $(Ni_{1-x}Co_x)O$ where x is between 0.0 and 0.5, and an alloy of(Fe—Mn) and Cr, the exchange bias layer formed directly on and in contact with the seed layer;

a laminated antiparallel pinned layer adjacent to the exchange bias layer, the laminated antiparallel pinned layer comprising a first ferromagnetic film formed directly on, in contact with, and antiferromagnetically coupled to the exchange bias layer, a second ferromagnetic film, and a nonmagnetic antiparallel coupling film between and in contact with the first and second ferromagnetic films for coupling the first and second ferromagnetic films together antiferromagnetically so that their magnetizations are aligned antiparallel with one another, the magnetizations of the first and second ferromagnetic films remaining antiparallel and pinned by the exchange bias layer in the presence of an applied magnetic field;

a nonmagnetic spacer layer adjacent to the second ferromagnetic film of the laminated antiparallel pinned layer; and

a free ferromagnetic layer adjacent to and in contact with the spacer layer and having a preferred axis of magnetization in the absence of an applied magnetic field that is generally perpendicular to the magnetization axis of the first and second ferromagnetic films in the laminated antiparallel pinned layer.

5,701,224

ROTARY HEAD CLEANING APPARATUS AND METHOD OF CONTROLLING SAME

Masato Sakui, Nagaokakyo, Japan, assignor to Mitsubishi Denki Kabushiki Kaisha, Tokyo, Japan

Continuation of Ser. No. 188,785, Jan. 31, 1994, abandoned. This application Jul. 31, 1995, Ser. No. 509,657

Claims priority, application Japan, Feb. 8, 1993, 5-16085

Int. Cl.⁶ G11B *5/41*

U.S. Cl. 360—128 **2 Claims**

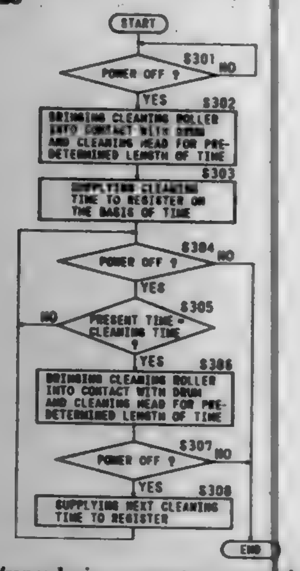

1. A recording/reproducing apparatus comprising:

a magnetic head for recording/reproducing signals on a magnetic tape;

a rotary drum on which said magnetic head is mounted;

a cleaning mechanism, adapted to be brought into contact with said rotary drum, for cleaning said magnetic head;

time-measuring means for measuring time-of-day;

time-interval setting means for selecting a magnetic head cleaning time interval; and

cleaning control means for directing said cleaning mechanism to clean said magnetic head for a predetermined time period when said cleaning control means determines that power to said magnetic head for recording or reproducing has been turned off and for thereafter directing said cleaning mechanism to repeatedly clean said magnetic head after the selected magnetic head cleaning time interval lapses subsequent each cleaning, based on the time-of-day, when said cleaning control means determines that power to said magnetic head for recording or reproducing remains off.

5,701,225

TAPE CASSETTE HAVING A MINIMIZED CLAMP SET

Hideki Okumura, Neyagawa; Kazunori Sakamoto, Katano; Kiyoshi Kubota, Takatsuki, and Kazunori Kubota, Neyagawa, all of Japan, assignors to Matsushita Electric Industrial Co., Ltd., Osaka, Japan

Filed Jun. 6, 1995, Ser. No. 461,823

Claims priority, application Japan, Jun. 17, 1994, 6-135619

Int. Cl.⁶ G11B *23/20*

U.S. Cl. 360—132 **5 Claims**

1. A tape cassette, comprising:

a pair of reels each including a reel hub, each said reel hub having an anchor groove defined in an outer peripheral surface thereof;

an elongated clamping piece received within each said anchor groove, said elongated clamping piece having a predetermined width as measured circumferentially of said reel hub; and

a tape medium that comprises a length of magnetic recording tape having opposite ends, each of said opposite ends having

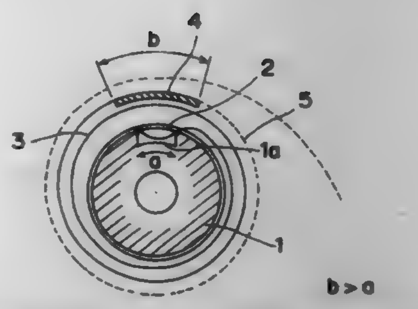

a leader tape connected therewith by a respective splicing tape having a predetermined length, said splicing tape being in the form of a nonmagnetic tape having a thin metal film deposited on a surface thereof, one end of each said leader tape that is remote from said length of magnetic recording tape being received within a respective said reel hub and anchored to the respective said reel hub by a respective said clamping piece received within the respective said anchor groove;

wherein one said splicing tape is positioned, when said tape medium is wound around one said reel hub, at a position that is immediately radially outward of said clamping piece of the one said reel hub, the predetermined length of the one said splicing tape being greater than the predetermined width of said elongated clamping piece and less than one-half of the circumference of the one said reel hub.

5,701,226

APPARATUS AND METHOD FOR DISTRIBUTING ELECTRICAL POWER

Lawrence J. Gelbien, West Islip; Philip B. Andreas, East Northport, and Werner J. Schweiger, East Patchogue, all of N.Y., assignors to Long Island Lighting Company, Hicksville, N.Y.

Continuation of Ser. No. 164,905, Dec. 9, 1993, Pat. No. 5,513,061. This application Jan. 29, 1996, Ser. No. 593,213

Int. Cl.⁶ H02H *3/07*

U.S. Cl. 361—63 **4 Claims**

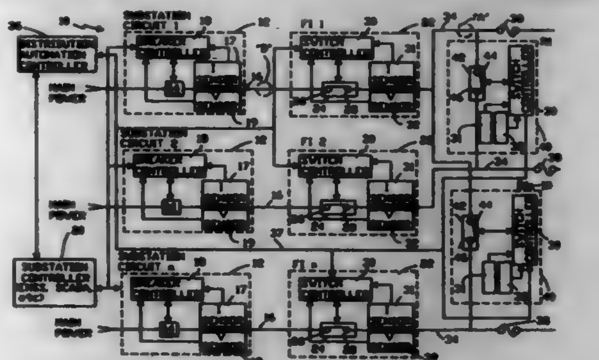

1. A controller for automatically sectionalizing a feeder in a power distribution system in which at least one fault isolating switch member is positioned in series with feeder conductors, the at least one fault isolating switch member including a sensor for sensing a fault, the controller comprising:

fault determining circuitry for determining if a fault exists at a feeder conductor based on information from the sensor;

actuating circuitry for selectively actuating the at least one fault isolating switch member when a fault is detected;

timing circuitry for activating the actuating circuitry after a predetermined time delay;

monitoring circuitry for activating the actuating circuitry after a predetermined number of fault detections; and

control circuitry for selectively controlling activation of the actuating circuitry by one of said timing circuitry and said monitoring circuitry.

5,701,227

POWER SURGE PROTECTION ASSEMBLY

Barry D. Ryan, Coeur d'Alene, Id., assignor to A.C. Data Systems of Idaho, Inc., Hayden, Id.

Division of Ser. No. 360,982, Dec. 20, 1994, Pat. No. 5,602,532. This application Jun. 28, 1996, Ser. No. 672,418

Int. Cl.⁶ H01C *7/12*

U.S. Cl. 361—118 **17 Claims**

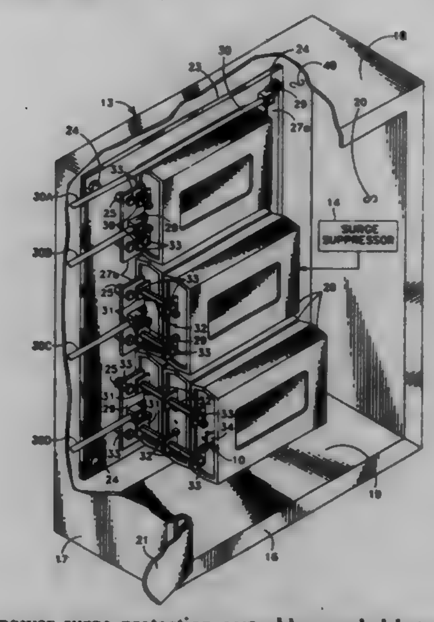

1. A power surge protection assembly coupled between a high voltage power line and a neutral line, comprising:

a modular box for encasing a power surge protection circuit, the modular box having a first and second opposite lateral side;

a first conductor bus extending from the first lateral side of the box;

a second conductor bus extending from the second lateral side of the box;

a first clamping assembly for coupling the power line directly to the first conductor bus;

a second clamping assembly for coupling the neutral line directly to the second conductor bus thereby providing a modular self-contained power surge protection unit for the power line;

a first electrically conductive connector post having a first end electrically coupled to the first conductor bus and having a second end for electrically coupling to a first conductor bus of an adjacent modular box; and

a second electrically conductive connector post having a first end electrically coupled to the second conductor bus and having a second end for electrically coupling to a second conductor bus of the adjacent modular box.

5,701,228

STAGE SYSTEM OR DEVICE

Nobuo Ishii, Yamanashi-ken, Japan, assignor to Tokyo Electron Limited, Tokyo, Japan

Filed Mar. 15, 1996, Ser. No. 616,305

Claims priority, application Japan, Mar. 17, 1995, 7-086101

Int. Cl.⁶ H02N *13/00*

U.S. Cl. 361—234 **22 Claims**

1. A stage device or system comprising;

an electrostatic chuck portion having a substrate-mounted face made of ceramics;

a support block continuous from the bottom of the electrostatic chuck portion and made integral to the electrostatic chuck portion;

an insulating section for electrically insulating the electrostatic chuck portion from other members;

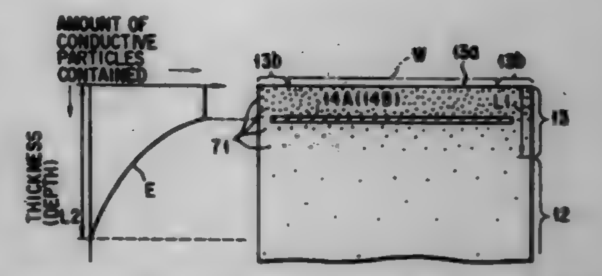

at least one of an electrode embedded in the electrostatic chuck portion and serving to generate charge on the substrate-mounted face, when DC voltage is applied to the electrode, to attract and hold a substrate on the face; and

resistibility reducing material added to the ceramics to reduce resistibility of the ceramics forming the electrostatic chuck portion to remove charge from the substrate-mounted face when the substrate is to be released from the face;

wherein an amount of resistibility reducing materials contained in the ceramics becomes gradually smaller and smaller as the amount of resistibility reducing materials comes from the electrode nearer to the support block.

5,701,229

STATION DEVICE TO WHICH IS CONNECTED AN ELECTRONIC APPARATUS SUCH AS TAPE RECORDER

Hannori Yamamoto, Saitama, Japan, assignor to Sony Corporation, Tokyo, Japan

Filed Apr. 17, 1996, Ser. No. 633,530

Claims priority, application Japan, Apr. 21, 1995, PO7-097269

Int. Cl.⁶ H02B *1/14;* **H01R** *13/62*

U.S. Cl. 361—617 **13 Claims**

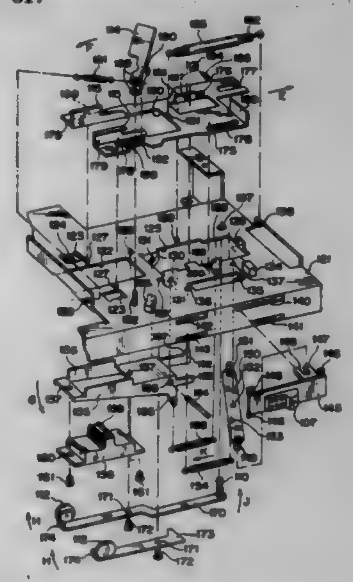

1. A station device for electronic apparatus, said electronic apparatus having a terminal portion for connection to the station device and opening/closing means for opening or closing said terminal portion, said station device comprising:

a loading portion on which said electronic apparatus is loaded;

a connection portion provided on said loading portion and adapted to be connected to said terminal portion of the electronic apparatus;

detection means for detecting the loading of the electronic apparatus on said loading portion; and

actuating means for moving said opening/closing means of said electronic apparatus in a direction of opening said terminal portion based upon the results of detection from said detection means;

said actuating means also moving said connection portion to a connection position with said terminal portion, thereby actuating said connection portion;

wherein said actuating means includes a first movement member given a forward movement by said detection means for moving the opening/closing means of said electronic apparatus in a direction of opening said terminal portion and a second movement member for moving said connection portion in a direction of connecting said connection portion with said terminal portion by the forward movement of said first movement member.

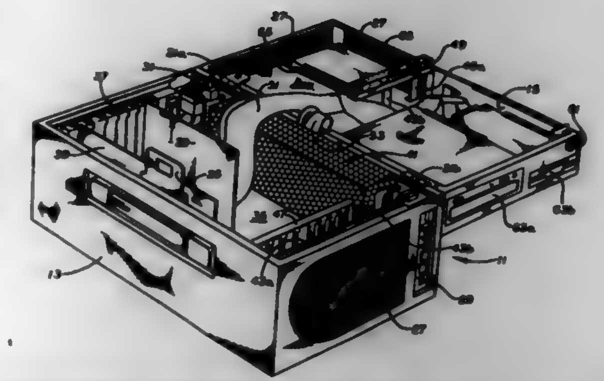

5,701,230

PORTABLE COMPUTER WITH THIN COMPARTMENT FOR RECEIVING A FLAT ARTICLE THEREIN

Andrew Liang; Lilian Cheng, and Gwo Chyuan Chen, all of Taipei, Taiwan, assignors to Quanta Computer Inc., Taipei, Taiwan

Filed Jan. 11, 1996, Ser. No. 584,327

Int. Cl.⁶ G06F *1/16;* **H05K** *5/03*

U.S. Cl. 361—681 **4 Claims**

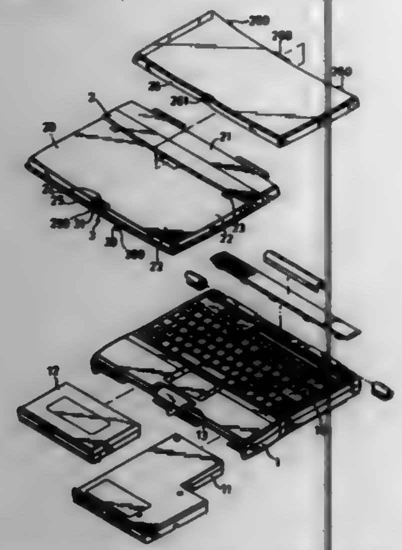

1. A portable computer comprising an upper housing which has an inner surface with a display means provided thereon, and a lower housing which is connected pivotally to said upper housing and which has an inner surface with a keyboard device provided thereon, wherein an outer surface of one of said upper and lower housings is formed with a raised portion so as to define a recessed portion adjacent to said raised portion and a lid member mounted thereon that cooperates with said outer surface so as to cover said recessed portion and form a thin compartment for receiving a flat article therein; said recessed portion having at least one engaging hole at one edge section bordering said raised portion and said lid member having at least one engaging tab extending therefrom and into said at least one engaging hole.

5,701,231

PERSONAL COMPUTER ENCLOSURE WITH PERIPHERAL DEVICE MOUNTING SYSTEM

Cuong D. Do, Woodland Hills; Nhut T. Ha, and Joseph A. Butryn, both of Los Angeles, all of Calif., assignors to Citicorp Development Center, Inc., Los Angeles, Calif.

Filed May 3, 1996, Ser. No. 642,451

Int. Cl.⁶ G06F *1/16;* **H05K** *7/04*

U.S. Cl. 361—683 **4 Claims**

1. A chassis for installation of components of a personal computer system, said personal computer system including a motherboard, said motherboard including a plurality of slots for holding cards installed perpendicular to said motherboard, a plurality of peripheral devices and at least one cooling fan, said chassis comprising:

a) a top portion dimensioned and adapted for installation of said plurality of peripheral devices in a single layer;

b) a bottom portion hingedly coupled to said top portion, said bottom portion dimensioned and adapted for installation of i) said motherboard parallel to and adjacent to a bottom surface of said bottom portion; and ii) said at least one cooling fan,

c) a bracket disposed in said top portion having a resilient layer coupled thereto, said bracket and resilient layer arranged so that the resilient layer engages a top edge of said cards installed in said slots on said motherboard when the chassis is in said closed position,

wherein during normal operation of said personal computer system, said top portion and said bottom portion are arranged such that said chassis is in a closed position.

5,701,232

SLIDING PROTECTION DOOR FOR COVERING ONE OR BOTH OF A PAIR OF MUTUALLY EXCLUSIVE ELECTRICAL CONNECTORS

John G. Tang, San Carlos; David M. Gallatin, and David J. Balk, both of San Jose, all of Calif., assignors to Apple Computer, Inc., Cupertino, Calif.

Filed Aug. 29, 1996, Ser. No. 705,485

Int. Cl.⁶ G06F *1/16;* **H05K** *5/03*

U.S. Cl. 361—683 **4 Claims**

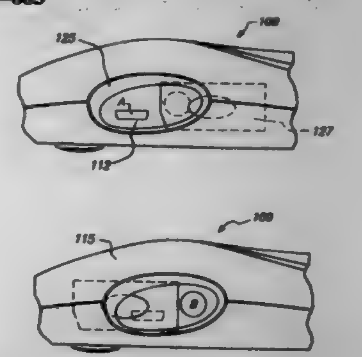

1. A protection assembly adapted for allowing non-simultaneous user access to a pair of mutually exclusive electrical connectors which are disposed inside an opening of a housing of a computing device, said protection assembly comprising:

a door slidably mounted relative to the housing of the computing device, said door, in a closed position, being operatively adapted to cover the opening for preventing user access to the pair of mutually exclusive electrical connectors;

guiding means fastened to the housing for providing a path for guiding the sliding movement of the door;

a wall fastened to the housing and adapted for limiting the door to move in a sliding manner; and

a door stop fastened to the housing of the computing device and so configured for the door to slidably stop in a first open position where the door exposes a first electrical connector of the mutually exclusive pair and covers up a second connector of the pair, said door stop being further configured for the door to slidably stop in a second open position where the door exposes the second electrical connector and covers up the first electrical connector to prevent user access.

5,701,233

STACKABLE MODULES AND MULTIMODULAR ASSEMBLIES

John C. Carson, Corona del Mar; Robert E. DeCaro, San Juan Capistrano; Ying Hsu, Huntington Beach, and Michael K. Miyake, Westminster, all of Calif., assignors to Irvine Sensors Corporation, Costa Mesa, Calif.

Filed Jan. 23, 1995, Ser. No. 376,799

Int. Cl.⁶ H01L *23/055;23/053;* **H05K** *7/02;* **H01R** *9/09*

U.S. Cl. 361—735 **24 Claims**

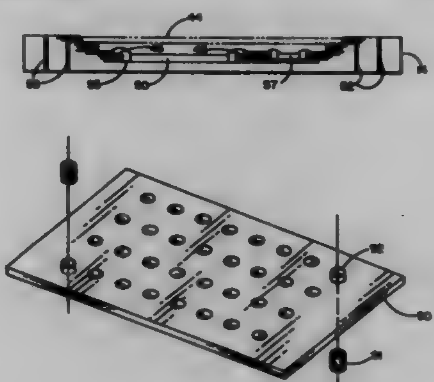

1. A stacked, resealable, multimodular, electronic circuit assembly comprising:

(1) at least two stacked modules, each module comprising a dielectric substrate having upper and lower planar surfaces and at least one cavity in at least one of said surfaces said cavity having lesser width and breadth than said one surface, thereby forming a dielectric substrate matrix surround said cavity;

(2) at least one electronic component comprising a three-dimensional stack of IC chips positioned within at least one cavity of each of the said modules and having I/O contacts;

(3) a closure plate overlying said cavity, enclosing same and bonded to said one surface to provide a hermetic seal of said cavity;

(4) a plurality of electrically conductive through-vias between said upper and lower planar surfaces of each of said modules outside of said cavity and within said matrix, each of said through-vias having exposed electric contact points where it penetrates said upper and lower planar surfaces;

(5) said I/O contacts of said electronic components in each of said modules being electrically connected with through-vias in each respective module; and

(6) a planar, multichannel connector between each opposing pair of said modules for sealing said modules when pressed together and having separate electrically conductive through channels in an array on centers of 0.2 inch or less and electrically coupling opposing through-vias in said adjacent modules.

5,701,234

SURFACE MOUNT COMPONENT FOR SELECTIVELY CONFIGURING A PRINTED CIRCUIT BOARD AND METHOD FOR USING THE SAME

Kenneth L. Wong, Sunnyvale, Calif., assignor to Pacesetter, Inc., Sunnyvale, Calif.

Filed Dec. 6, 1995, Ser. No. 568,035

Int. Cl.⁶ H01R *9/09*

U.S. Cl. 361—773 **20 Claims**

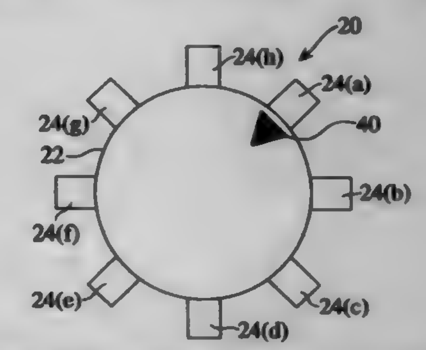

1. A surface mount component which can be mounted to a surface of a printed circuit board having a plurality of bonding pads connected to circuitry provided on the printed circuit board, comprising:

a puck having first and second wiring patterns, and a plurality of electrical connectors, a first set of electrical connectors being connected to said first wiring pattern, and a second set of said electrical connectors connected to said second wiring pattern; and,

wherein said puck can be mounted to the surface of the printed circuit board in a selected one of a plurality of different possible positions, with at least selected ones of said first and second sets of electrical connectors being connected to respective ones of said bonding pads, to thereby achieve a selected one of a plurality of different selectable circuit configurations.

5,701,235

LOW COST FLEXIBLE LIGHTING METHOD FOR APPLIANCES

Lori Ann Hagemeyer Cook, Scott Township, Vanderburgh County; Ronald W. Guess, Evansville, and Stephen G. Williams, Ohio Township, Warrick County, all of Ind., assignors to Whirlpool Corporation, Benton Harbor, Mich.

Continuation of Ser. No. 362,921, Dec. 23, 1994, abandoned. This application Jan. 16, 1996, Ser. No. 585,959

Int. Cl.⁶ F21V *8/00*

U.S. Cl. 362—26 **15 Claims**

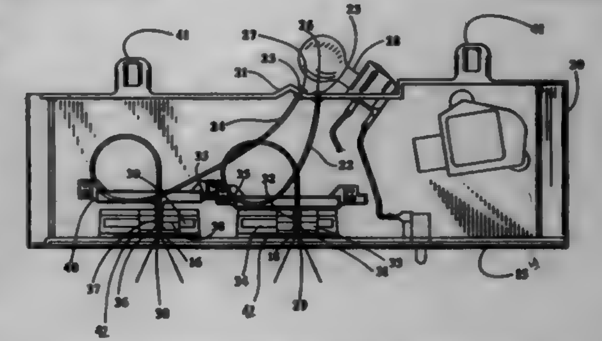

1. A low cost, flexible lighting method for illuminating at least one indicator on a control panel in a refrigerator, comprising the steps of:

providing a compartment in the refrigerator to maintain adjustable temperature levels therein and having a light source contained in the compartment;

providing an adjustable temperature control associated with the control panel located in the compartment to set said adjustable temperature levels and having the at least one movable indicator connected thereto;

providing at least one extruded optical fiber having a first end and a second end, said first end being arranged so that light emanating from said light source in the refrigerator compartment enters said first end and is transmitted through said optical fiber so that it exits said second end, said second end being arranged to move in conjunction with and to illuminate said at least one indicator with said transmitted light via said optical fiber when said adjustable temperature control is moved; and

providing a colored translucent part adjacent to said second end and said at least one indicator such that said transmitted light will pass through said translucent part after exiting said second end to provide a colored illumination of said at least one indicator.

5,701,236
RAILING SYSTEM
Robert P. Viviano, 50 Bellview Cir., Robinson Township, Pa. 15136
Filed Nov. 20, 1995, Ser. No. 559,831
Int. Cl.[6] F21S 5/00
U.S. Cl. 362—152 12 Claims

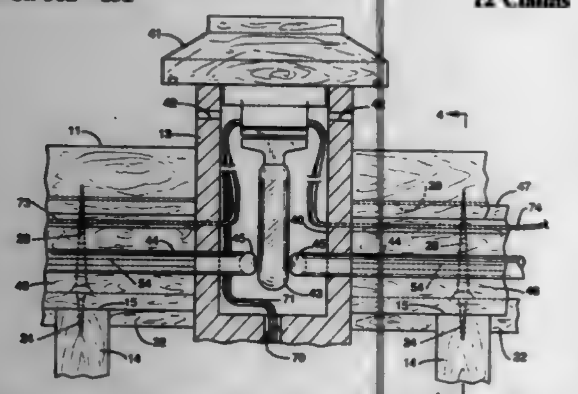

10. A combination railing and illumination system comprising: a railing including upper and lower rails supported between spaced newel posts and a plurality of balusters disposed between said upper and lower rails, light means mounted in an accessible compartment in one of said newel posts, an elongated optical light transmission means having a light receiving end, said light transmission means secured to one of said rails and the light receiving end thereof exposed to said light means for illumination of said light transmission means, said elongated optical light transmission means received in an elongated groove in one of said rails, said elongated groove having a bottom and opposing sides and including a kerf compression slot coextending in the bottom of said groove, and screw means penetrating through said kerf slot and thereby compressing said opposing sides together to clamp said elongated optical light transmission means therebetween.

5,701,237
SWITCHING POWER SUPPLY
Jun Hyun Yang, Suwon, Rep. of Korea, assignor to Samsung Electronics Co., Ltd., Kyungki-do, Rep. of Korea
Filed Sep. 27, 1995, Ser. No. 534,569
Claims priority, application Rep. of Korea, Oct. 5, 1994, 94-25399
Int. Cl.[6] H02M 3/335
U.S. Cl. 363—20 17 Claims

1. A switching power supply comprising:

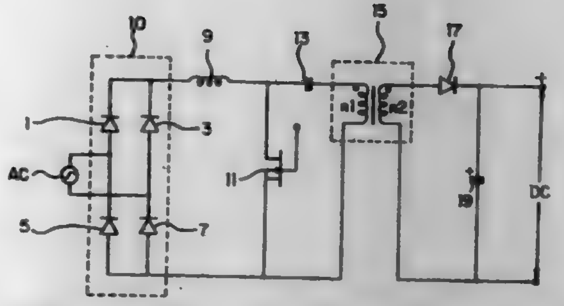

rectifying means, having an output terminal, for converting an alternating current (AC) input voltage into a direct current (DC) voltage and outputting the DC voltage to the output terminal;

inductance means, having a first electrode connected to the output terminal of said rectifying means and having a second electrode, for inducing a current based on the DC voltage output from said rectifying means;

switching means for switching between states to control a flow of current, said switching means connected between said second electrode of said inductance means and a ground voltage source;

capacitive means for holding a charge, said capacitive means having first and second electrodes, wherein the first electrode of said capacitive means is connected to said second electrode of said inductance means; and

transforming means for transforming a voltage, said transforming means having a primary coil connected to said second electrode of said capacitive means, wherein said inductance means is a choke coil, and wherein the inductance value of said choke coil is selected so that when said switching means controls the current flow from said choke coil to said ground voltage source the current flowing through said choke coil is kept constant regardless of the switching state of said switching means.

5,701,238
FLOW-THROUGH DC VOLTAGE CHANGER HAVING A FURTHER OUTPUT CIRCUIT
Marc Weidinger, Munich, and Karl-Heinz Kramer, Wolfratshausen, both of Germany, assignors to Siemens Aktiengesellschaft, Munich, Germany
Continuation of Ser. No. 509,902, Aug. 1, 1995, abandoned. This application Dec. 30, 1996, Ser. No. 775,381
Claims priority, application European Pat. Off., Aug. 1, 1994, 94111983
Int. Cl.[6] H02M 3/335;3/18;7/25
U.S. Cl. 363—21 11 Claims

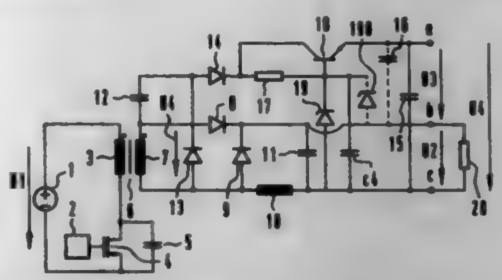

1. A flow-through DC voltage changer, comprising:

a transformer having only a primary winding and a secondary winding;

a primary side main circuit connected to said primary winding of said transformer, said primary side winding having an input at which is applied input voltages, said primary side main circuit including:

an electronic switch connected in series with said primary winding of said transformer;

a capacitance connected across said electronic switch to provide a demagnetization energy in conjunction with said primary winding;

a control means connected for controlling said electronic switch;

a secondary-side main circuit connected to said secondary winding of said transformer, said secondary-side main circuit having an output at which is available a main output voltage, said secondary side main circuit including:

a rectifier diode connected in a series arm,

a freewheeling diode connected in a shunt arm,

an inductor connected in a series arm and

a capacitor lying parallel to the output,

a further output circuit in addition to said secondary-side main circuit being connected to said secondary winding of said transformer, said further output circuit having an auxiliary output at which is available an auxiliary output voltage, said auxiliary output voltage being substantially independent of changes in the input voltage, said further output circuit including

a first capacitor,

a rectifier diode connected between said first capacitor and said secondary winding, and

a capacitor arrangement connected in parallel to an output of said further output circuit and

said further output circuit taking demagnetization energy from said transformer in a blocking phase of said flow-through DC voltage changer,

said first capacitor of said further output circuit being connected to a junction of said secondary winding with said rectifier diode of said secondary-side main circuit; and

in the further output circuit, a second diode polarized in a conducting direction with reference to a voltage across the first capacitor is connected between the connection of said rectifier diode to the capacitor on one hand and said output on another hand.

5,701,239
HIGH-VOLTAGE DIRECT CURRENT TRANSMISSION INSTALLATION HAVING A HIGH VOLTAGE REGULATION CAPABILITY
Per-Erik Björklund, Bjursås; Tomas Jonsson, Grängesberg, and Lars-Erik Juhlin, Ludvika, all of Sweden, assigners to Asea Brown Boveri AB, Västerås, Sweden
Filed Feb. 8, 1996, Ser. No. 598,389
Claims priority, application Sweden, Feb. 10, 1995, 9500480-0
Int. Cl.[6] H02J 3/36; H02M 5/45;3/24
U.S. Cl. 363—35 10 Claims

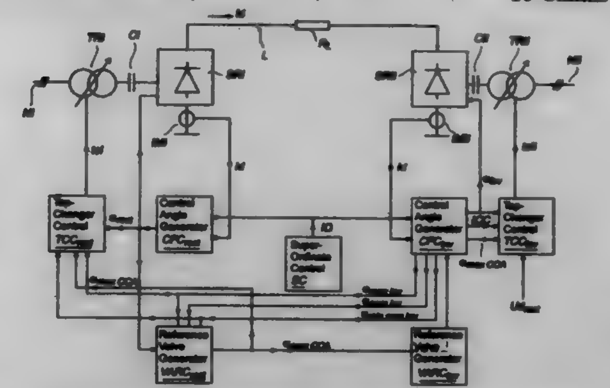

1. An installation for transmission of electric power by means of high voltage direct current, comprising:

a first phase angle controlled converter connected to a first alternating voltage network;

a d.c. connection;

a second phase angle controlled converter connected to a second alternating voltage network;

said first and second converters being connected to said d.c. connection, and said first converter controlling a current flowing in said d.c. connection and said second converter controlling a voltage on said d.c. connection;

means for sensing a control angle of said first converter; and control means connected to said means for sensing and to said first and second converters;

said control means controlling said second converter, so that upon a change in said sensed control angle such that it reaches a limit of a predetermined phase angle interval, said second converter establishes a d.c. voltage on said d.c. connection which limits said change in said sensed control angle.

5,701,240
APPARATUS FOR POWERING A TRANSMITTER FROM A SWITCHED LEG
Walter J. Downey, Los Gatos; Philip H. Sutterlin, Saratoga; J. Marcus Stewart, San Jose, and Amy O. Hurlbut, San Francisco, all of Calif., assignors to Echelon Corporation, Palo Alto, Calif.
Continuation-in-part of Ser. No. 610,831, Mar. 5, 1996, and Ser. No. 649,574, May 17, 1996. This application May 17, 1996, Ser. No. 649,163
Int. Cl.[6] H02J 3/36; H04B 5/02
U.S. Cl. 363—35 5 Claims

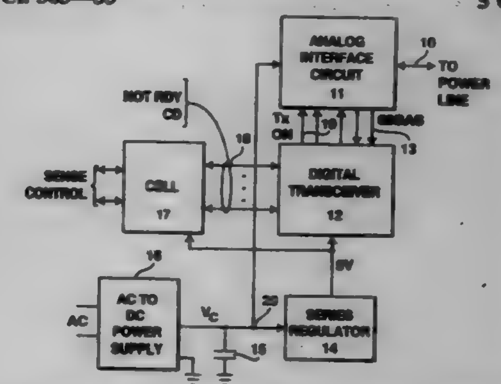

1. An apparatus for powering a transmitter from a switched leg of an AC power line where the switched leg is switched by a first switch, comprising:

a capacitor coupled to supply power to the transmitter;

a first circuit for sensing the potential on the capacitor and for inhibiting transmission from the transmitter when a potential on the capacitor falls below a predetermined potential;

a second switch for periodically coupling power from the power line for charging the capacitor; and,

a second circuit for controlling the first switch such that the switched leg is open when the second switch is coupling power from the power line and for opening the first switch in the beginning of an AC power line cycle.

5,701,241
RECOVERY OF TRANSMITTED POWER IN AN INSTALLATION FOR TRANSMISSION OF HIGH-VOLTAGE DIRECT CURRENT
Lars Döfnäs, and Mats Hyttinen, both of Ludvika, Sweden, assignors to Asea Brown Boveri AB, Västerås, Sweden
PCT No. PCT/SE95/00509, § 371 Date Oct. 9, 1996, § 102(e) Date Oct. 9, 1996, PCT Pub. No. WO95/31847, PCT Pub. Date Nov. 23, 1995
PCT Filed May 9, 1995, Ser. No. 722,228
Claims priority, application Sweden, May 18, 1994, 9401703
Int. Cl.[6] H02J 3/36
U.S. Cl. 363—35 16 Claims

1. A device for recovery of transmitted power in an installation for transmission of high-voltage direct current after a transitory

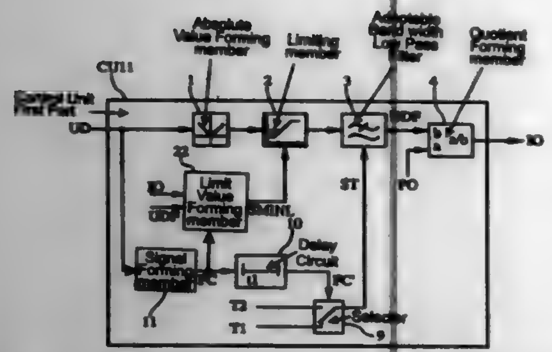

short-circuit fault on the dc connection (L1,L2) of the installation or in ac networks (N1,N2) connected to the installation, in which installation a converter (SR1) is controlled by means of a control unit (CU1), comprising a quotient-forming member, which forms a current order (IO) for the current (Id) in the dc connection in dependence on the quotient between a power order (PO) and a calculating value (UDF) of the direct voltage (Ud) at the converter, a low-pass filter which forms the calculating value as a filtered measured value (UD) of the direct voltage, said low-pass filter having a bandwidth (1/T1, 1/T2) capable of being influenced, wherein the control unit comprises a signal-forming member which forms a state signal (FC), indicating that a short-circuit fault has occurred, said state signal influencing the bandwidth of the low-pass filter such that the bandwidth is temporarily changed from a smaller value (1/T1) to a larger value (1/T2).

5,701,242

Patent Not Issued For This Number

5,701,243
HIGH-POWER FACTOR SERIES RESONANT RECTIFIER CIRCUIT
Myung Joong Youn; Gun Woo Moon, both of Daejeon, and Maru Go Kim, Seoul, all of Rep. of Korea, assignors to Korea Telecommunication Authority, Seoul, Rep. of Korea
Filed Dec. 12, 1995, Ser. No. 571,085
Claims priority, application Rep. of Korea, Dec. 12, 1994, 94-33797
Int. Cl.[6] H02M *7/04;7/538*
U.S. Cl. 363—89 **8 Claims**

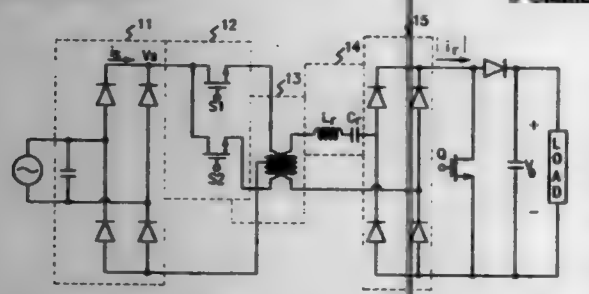

1. A high-power factor series resonant rectifier circuit comprising:
a first rectifying means for rectifying an AC input signal to produce a first rectified output;
a polarity changing means for changing polarity of the first rectified output in response to a resonant frequency to produce an alternating output;
an isolation transforming means for transforming the alternating output to produce a transformer output; and
a resonant means for resonating the transformer output to produce a resonated output, the resonant frequency being associated with the resonant means.

5,701,244
UNINTERRUPTIBLE POWER SUPPLY
Steven C. Emmert, Crystal Lake; Louis J. Lundell, Buffalo Grove, and Michael P. Murray, Chicago, all of Ill., assignors to Motorola, Inc., Schaumburg, Ill.
Filed Oct. 26, 1995, Ser. No. 549,993
Int. Cl.[6] H01F *27/02*
U.S. Cl. 363—146 **9 Claims**

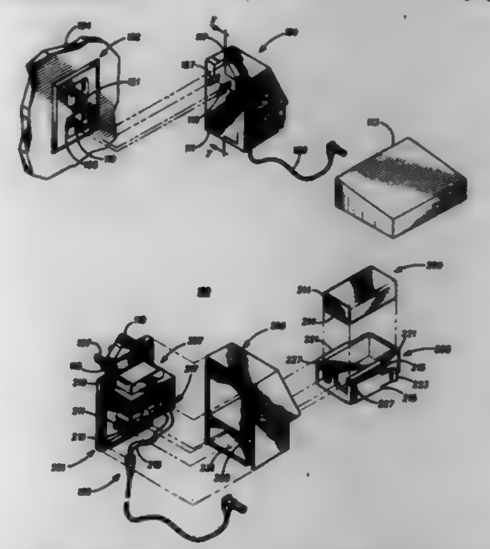

1. An uninterruptible power supply (UPS) for supplying an uninterruptible direct-current power to an electric appliance having a housing frame, the UPS receiving alternating-current (AC) power from an AC outlet, the UPS comprising:
a transformer circuit for converting the AC power to a main source of DC power;
a battery for supplying a back-up source of DC power;
a switching circuit for electrically coupling the battery with the transformer circuit;
a housing physically supporting the switching circuit, the battery, and the transformer circuit, the housing being separate and apart from the housing frame; and
a connector attached to the housing for attaching the UPS to the AC outlet.

5,701,245
SUSPENSION CONTROL SYSTEM
Kazuo Ogawa, Nagoya; Takaaki Enomoto, Anjou; Masato Kawai; Minoru Kato, both of Toyota, and Kunihito Sato, Mishima, all of Japan, assignors to Toyota Jidosha Jabushiki Kaisha, Toyota, Japan
Filed Oct. 6, 1995, Ser. No. 540,013
Claims priority, application Japan, Oct. 7, 1994, 6-270400
Int. Cl.[6] B60G *17/015*
U.S. Cl. 364—424.046 **7 Claims**

1. A suspension control system for controlling suspension means disposed between a mass body and a support base of a vehicle for supporting said mass body on said support base; said system comprising:
control means for varying and controlling a damping force of said suspension means according to a velocity ratio of a velocity of said mass body in a vertical direction to a relative velocity of said mass body and said support base in said vertical direction, said control means comprising:
vehicle speed detection means for detecting a speed of said vehicle;
an actuator for causing said damping force in response to a driving signal, said actuator varying said damping force at a rate corresponding to a driving frequency of said driving signal; and
frequency reduction means for, when said damping force is varied and controlled according to said velocity ratio,

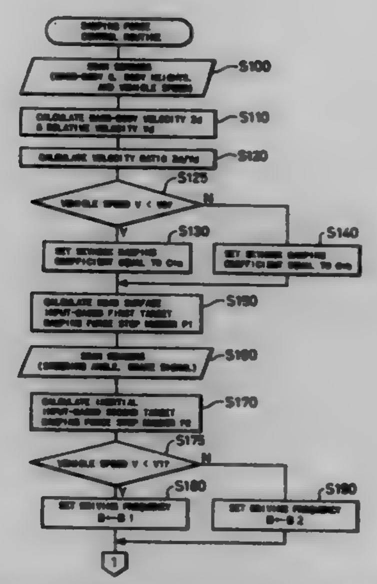

decreasing said driving frequency of said driving signal in response to said vehicle speed detected by said vehicle speed detection means to provide a lower driving frequency at a lower vehicle speed.

5,701,246
SUSPENSION CONTROL APPARATUS
Masaaki Uchiyama, Kanagawa-ken, Japan, assignor to Tokico Ltd., Kawasaki, Japan
Filed Mar. 17, 1995, Ser. No. 405,873
Claims priority, application Japan, Mar. 18, 1994, 6-074470
Int. Cl.[6] B60G *17/01*
U.S. Cl. 364—424.047 **6 Claims**

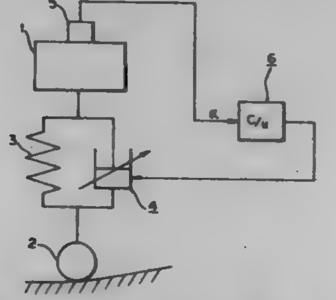

1. A suspension control device, comprising:
a shock absorber which can be controlled to have a variable damping coefficient, said shock absorber being disposed between a sprung mass and an unsprung mass of a vehicle;
an actuator for adjusting the damping coefficient of said shock absorber;
an acceleration detecting device for detecting vertical acceleration of the sprung mass of the vehicle; and
a control device for outputting a control signal to said actuator for setting the damping coefficient, wherein said control device receives the detected value of the vertical acceleration;
wherein said control device comprises a velocity determining means for determining the vertical velocity of the sprung mass from the value of the detected vertical acceleration, and a control signal calculating device for calculating the control signal on the basis of the value of the determined vertical velocity, where said control means further includes control signal adjusting means for changing the control signal based on the vertical velocity such that the damping coefficient of said shock absorber is decreased if the absolute value of the vertical acceleration exceeds an acceleration reference value.

5,701,247
INTEGRATED CONTROL SYSTEM FOR 4WD VEHICLES FOR CONTROLLING DRIVING TORQUE DISTRIBUTION
Hiroki Sasaki, Yokohama, Japan, assignor to Nissan Motor Co., Ltd., Kanagawa, Japan
Filed Jun. 5, 1995, Ser. No. 462,461
Claims priority, application Japan, Jun. 17, 1994, 6-135427
Int. Cl.[6] B60K *23/08*
U.S. Cl. 364—424.098 **5 Claims**

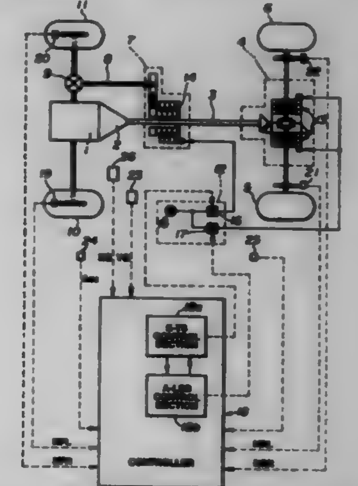

1. An integrated driving-torque distribution control system for a four-wheel drive vehicle, for controlling a driving torque distribution between front and rear wheels and a driving torque distribution between right and left wheels, comprising:
first torque distribution control means responsive to a first control command for controlling a front-and-rear driving torque distribution between subsidiary drive wheels installed at a first side of front and rear sides of the vehicle and primary drive wheels installed at a second side of the front and rear sides;
second torque distribution control means responsive to a second control command for controlling a right-and-left driving torque distribution between said primary drive wheels;
first target slip arithmetic means for deriving a target slip state of said subsidiary drive wheels, in which state a cornering force applied to said subsidiary drive wheels is maintained at a predetermined high level;
first actual slip arithmetic means for deriving an actual slip state of said subsidiary drive wheels;
second target slip arithmetic means for deriving a target slip state of an outer wheel of said primary driven wheels during turning of the vehicle, in which state a cornering force applied to said outer wheel is maintained at a predetermined high level;
second actual slip arithmetic means for deriving an actual slip state of said outer wheel;
decision means for deciding whether the vehicle is in an acceleration-turning state; and
integrated control means for maintaining both said cornering force applied to said subsidiary drive wheels and said cornering force applied to said outer wheel at said predetermined high level when the vehicle is in the acceleration-turning state and said actual slip state of said subsidiary drive wheels exceeds said target slip state, by simultaneously controlling said first and second torque distribution control means to adjust said actual slip state of said subsidiary drive wheels toward said target slip state of said subsidiary drive wheels in response to said first control command and to adjust said actual slip state of said outer wheel toward said target slip state of said outer wheel in response to said second control command as long as said first control command is output.

5,701,248

PROCESS FOR CONTROLLING THE DRIVING STABILITY WITH THE KING PIN INCLINATION DIFFERENCE AS THE CONTROLLED VARIABLE

Peter Wanke, Frankfurt, Germany, assignor to ITT Automotive Europe GmbH, Frankfurt, Germany

Division of Ser. No. 475,389, Jun. 7, 1995. This application Jun. 7, 1995, Ser. No. 475,677

Claims priority, application Germany, Nov. 25, 1994, P4441956.2; Nov. 25, 1994, P4441957.0; Nov. 25, 1994, P4441958.9; Nov. 25, 1994, P4441959.7; Dec. 31, 1994, P4447313.3; Apr. 27, 1995, P19515053.8

Int. Cl.[6] B60T *8/32;* **G01P** *3/44*

U.S. Cl. 364—426.01 **16 Claims**

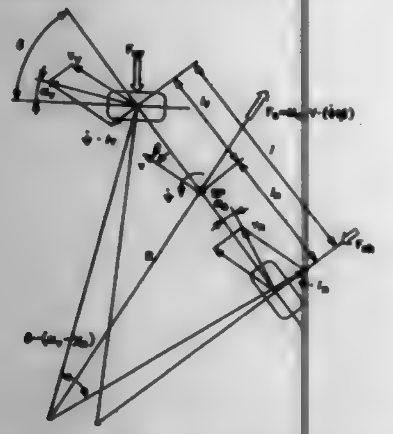

1. A method for controlling driving stability of a vehicle having front and rear axles, each of the axles having wheels, comprising the steps of:

(a) forming a variable which characterizes the driving stability of the vehicle, the variable being a difference between a front kingpin inclination value and a rear kingpin inclination value for the wheels of the front and rear axles, respectively;

(b) performing a comparison between the variable and a predetermined desired value; and

(c) controlling the vehicle based on the comparison, so that the variable approaches a desired value.

5,701,249

SERVICE AND USAGE DATA COLLECTION USING A SPECIAL MAIL PIECE

William Berson, Weston, Conn., assignor to Pitney Bowes Inc., Stamford, Conn.

Filed Mar. 23, 1995, Ser. No. 408,801

Int. Cl.[6] G07B *17/00;17/02*

U.S. Cl. 364—464.18 **9 Claims**

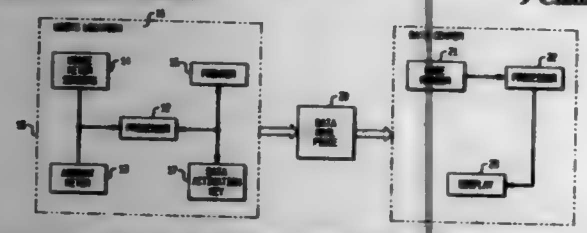

1. A postal monitoring system that determines the amount and type of usage of mailing machines without having a representative of the mailing machine physically inspect the mailing machine, said system comprises:

a) a processor having an encoding scheme programmed therein for translating the amount and type of usage of the mailing machine including information on the features used by the user of the mailing machines when preparing mailings, received by said processor into coded form;

b) an account meter in communication with said processor for exchanging data with said processor;

c) a usage meter in communication with said processor for exchanging data with said processor;

d) a printer in communication with said processor, said printer prints an encoded message on a mailpiece containing the data received by said processor from said account meter to meter said information on the usage of features and usage of said usage meter;

e) means for delivering the mailpiece;

f) means coupled to said delivering means for reading the encoded message;

g) means coupled to said reading means for processing the encoded message; and

h) means coupled to said processing means for displaying the encoded message in a human readable format so that information regarding the mailing machines may be used for market research and/or preventive maintenance scheduling.

5,701,250

SETTING BY PHONE FOR COUNTER RESETTABLE POSTAGE METERS

Michael Wilson, Trumbull, Conn., assignor to Pitney Bowes Inc., Stamford, Conn.

Filed Apr. 7, 1995, Ser. No. 418,909

Int. Cl.[6] G07B *17/00*

U.S. Cl. 364—464.13 **17 Claims**

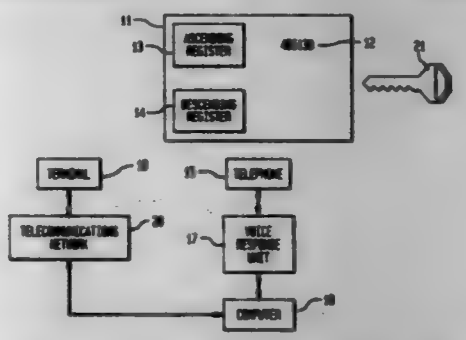

1. A method of funding a mechanical postage meter with a variable amount of postage, the postage meter having means for entering postage manually, the method comprising the steps of:

a. establishing a data center funding computer that has a plurality of data bases and is remote from the postage meter;

b. establishing communication with the data center funding computer;

c. entering into the data bases of the data center funded computer data identifying the postage meter to be funded;

d. entering into the data bases of the data center funding computer data representing a desired variable amount of postage to be entered into the means for entering postage manually of the postage meter;

e. processing and validating the data representing the postage meter, desired variable amount of reset postage requested to ensure accuracy, integrity and security;

f. authorizing the reset of the postage meter with the postage when valid data is obtained in step e;

g. updating the data bases of the data center funding computer to reflect the added postage;

h. opening the postage meter;

i. physically adjusting the descending register in the meter with the approved added postage; and

j. closing the postage meter.

5,701,251

METHOD AND SYSTEM FOR CONSTRUCTING THE FIGURES OF BLANKS IN SHEET METAL WORK

Yukio Yoshimura, Ishikawa, Japan, assignor to Kabushiki Kaisha Komatsu Seisakusho, Tokyo, Japan

PCT No. PCT/JP94/01026, § 371 Date Dec. 29, 1995, § 102(e) Date Dec. 29, 1995, PCT Pub. No. WO95/04315, PCT Pub. Date Feb. 9, 1995

PCT Filed Jun. 24, 1994, Ser. No. 564,283

Claims priority, application Japan, Jul. 30, 1993, 5-190508

Int. Cl.[6] G06F *17/50;19/00*

U.S. Cl. 364—474.24 **10 Claims**

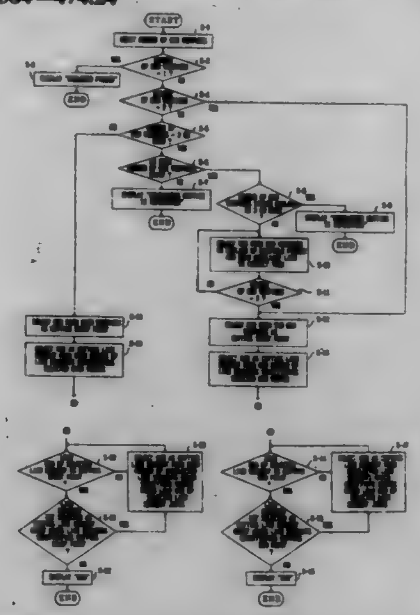

1. A blank-figure constructing method for sheet metal work wherein a cutting passage planned to sequentially cut a plurality of desired blanks from a sheet material is determined, utilizing a multiple figure composed of the figures of the plurality of blanks to be obtained, in the multiple figure of which the adjacent line segments of the single blank figures are combined, if the multiple figure has an even number of, four or more odd vertices at each of which an odd number of internal and external line segments of the multiple figure meet, an auxiliary line is drawn outside the multiple figure, connecting any two of the odd vertices on the outline of the multiple figure to make the total number of odd vertices be two or zero so that the cutting passage, which passes through all the internal, external line segments and auxiliary line of the multiple figure, can be determined.

5,701,252

DISTRIBUTION NETWORK SYSTEM FOR PRODUCTS AND INFORMATION

Daniela Facchin, Contra' Zanella, 6-36100, Vicenza, Italy, and Paola Frau, Via Dal Pozzo, 75-36100, Vicenza, Italy

PCT No. PCT/EP94/02549, § 371 Date Jan. 30, 1996, § 102(e) Date Jan. 30, 1996, PCT Pub. No. WO95/04333, PCT Pub. Date Feb. 9, 1995

PCT Filed Aug. 1, 1994, Ser. No. 591,667

Claims priority, application Italy, Aug. 2, 1993, VI93A0134

Int. Cl.[6] G06F *17/00*

U.S. Cl. 364—479 **2 Claims**

1. A method for dispensing products contained in automatic dispensers belonging to a distribution network systems, wherein said dispensers comprise:

A) a plurality of automatic dispensers each of which includes:

organized spaces suitable for containing the products to be dispensed;

means for taking a selected product and conveying it out of the store;

a system for the positioning of said means;

tools fixed to the conveying means, suitable for taking hold of the selected product and for releasing it;

reading means for the identification of the selected product;

primary storage systems for storing and processing the information regarding the stored items;

secondary storage systems for managing the information received from the user or from the network with which the dispenser is connected;

means for the identification of magnetic cards or semiconductor cards;

means for connecting each dispenser and a host computer;

wireless means for connecting each dispenser to a host computer;

means for displaying information;

means for printing the information required;

B) at least a host computer connecting said plurality of automatic dispensers, each of which being connected to a network node by telecommunication means, said method comprising:

a step in which a dispenser checks if a user's card is enabled to take products;

a step in which the products that can be selected are displayed on the video screen of said dispenser;

a step in which the user chooses the product he wants;

a step in which the dispenser checks if the product is available and, if so, takes it and delivers it to the user; characterized in that said steps are followed by:

a step in which the request is passed from a dispenser to other dispensers connected with the network by means of the host computer through a communication satellite, if the required product is not available in said dispenser;

a step in which the answer concerning the place where the required product is available is displayed and/or printed, said piece of information concerning the place where the required product is available being transmitted by the communication satellite to the dispenser from which the request came;

a step in which the cost of the product is debited, if the product has been delivered.

5,701,253

ISOLATED CURRENT SHUNT TRANSDUCER

Robert James Mayell, Tucker, and Richard Alan Kramer, Lawrenceville, both of Ga., assignors to Schlumberger Industries, Inc., Norcross, Ga.

Filed Apr. 4, 1995, Ser. No. 416,251

Int. Cl.[6] G01R *19/00*

U.S. Cl. 364—483 **17 Claims**

1. An isolated current shunt transducer which is operatively associated with a processing circuit, comprising:

(a) a current shunt having a first end and a second end, connected in a circuit such that a voltage difference between a voltage at the first end and a voltage at the second end is related to a current following through the current shunt;

(b) an isolation barrier positioned between the current shunt and the processing circuit to isolate the processing circuit from a

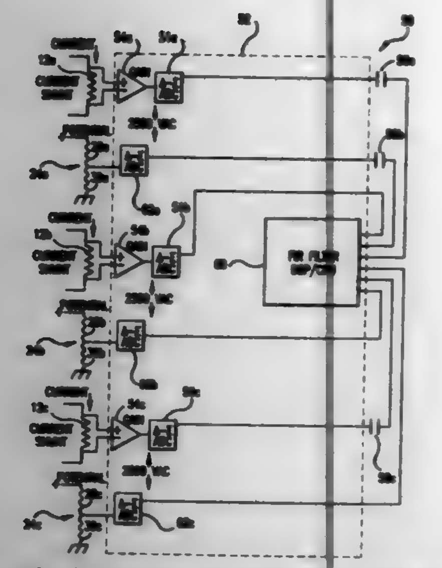

voltage that is common to both the first end and the second end of the current shunt; and

(c) an analog-to-distal converter operable to convert the voltage difference between the first and second ends of the current shunt to a series of voltage pulses and coupled between the current shunt and the isolation barrier.

5,701,254
SWITCH LEVEL SIMULATION SYSTEM
Takahiro Tani, Hyogo, Japan, assignor to Mitsubishi Denki Kabushiki Kaisha, Tokyo, and Mitsubishi Electric Semiconductor Software Co., Ltd., Hyogo, both of Japan
Filed Jun. 14, 1995, Ser. No. 490,363
Claims priority, application Japan, Jan. 30, 1995, 7-012715
Int. Cl.⁶ G06F *19/00*
U.S. Cl. 364—489 **16 Claims**

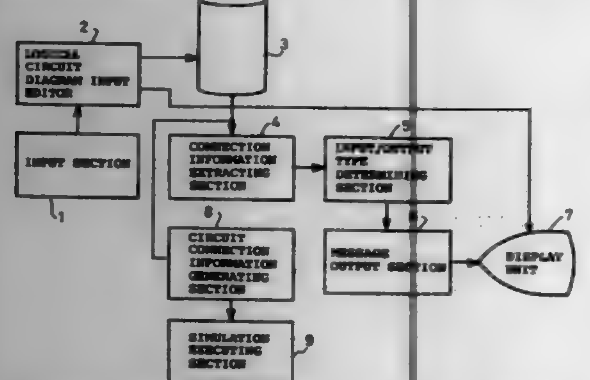

1. A switch level simulation system for executing simulation of a logic circuit on switch level, comprising:

an input means for inputting circuit information representing said logic circuit;

a connection information extracting section for extracting the connection state of each device in said logic circuit indicated by said circuit information and adding information indicating output or input to each terminal of each device;

an input/output type determining section for determining whether a switching device in said logic circuit is bidirectional and the flow direction of a signal in an uni-directional switching device on the basis of information indicating output or input of each terminal of each device added by said connection information extracting section;

a circuit connection information generating section for generating circuit connection information using the result of determining about switching devices by said input/output type determining section; and

a simulation execution section for executing simulation of a circuit on switch level according to said circuit connection information.

5,701,255
CELL GENERATION METHOD AND CELL GENERATION SYSTEM
Masahiro Fukui, Osaka, Japan, assignor to Matsushita Electric Industrial Co., Ltd., Osaka, Japan
Filed Sep. 12, 1995, Ser. No. 527,318
Claims priority, application Japan, Sep. 14, 1994, 6-220134; May 17, 1995, 7-118176
Int. Cl.⁶ G06F *17/50*
U.S. Cl. 364—491 **16 Claims**

1. A method of generating cells for a semiconductor integrated circuit, said method comprising the steps of:

(a) determining locations of transistors in a cell;

(b) finding wire routings between said transistors on a gridded plane; and

(c) performing a compaction process on a placement/wiring result on said gridded plane;

said step (a) including:

(a-1) initializing a grouping of transistors, said grouping being arranged in accordance with diffusion sharing;

(a-2) modifying said grouping;

(a-3) finding locations of transistors in said modified grouping;

(a-4) evaluating said locations found at said step (a-3); and

(a-5) making a judgment of whether to accept said locations found at said step (a-3) according to said evaluation made at said step (a-4).

5,701,256
METHOD AND APPARATUS FOR BIOLOGICAL SEQUENCE COMPARISON
Thomas G. Marr, and William I-Wei Chang, both of Huntington, N.Y., assignors to Cold Spring Harbor Laboratory, Cold Spring Harbor, N.Y.
Filed May 31, 1995, Ser. No. 455,654
Int. Cl.⁶ G06F *19/159*
U.S. Cl. 364—496 **19 Claims**

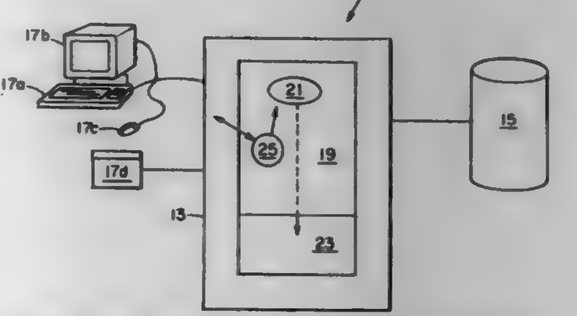

1. A computer method of comparing representations of biological sequences, comprising the steps of:

providing a source of representations of known biological sequences;

providing an indication of a subject sequence to be compared to the known sequences such that a best match is found;

using a digital processor:

(i) filtering out alignments of a certain length including fragments of the known sequences having a low average match when compared to the subject sequence and averaged across the length of the fragment, each match having a unit score constrained by a predetermined threshold, such that only alignments sufficiently matching the subject sequence on average remain, said filtering producing a remaining subset of the source of known sequences having alignments sufficiently matching the subject sequence on average; and

(ii) comparing the subject sequence with each known sequence in the remaining subset to find a best match.

5,701,257
SHOCK MEASURING METHOD IN GOODS TRANSPORTATION
Shinsuke Miura, Mishima; Takeshi Itoi, Kawasaki, and Shuichi Yabushita, Yokohama, all of Japan, assignors to Yamaichi Electronics Co., Ltd., Tokyo, Japan
Filed Jan. 2, 1996, Ser. No. 581,838
Int. Cl.⁶ G01H *11/00*
U.S. Cl. 364—508 **6 Claims**

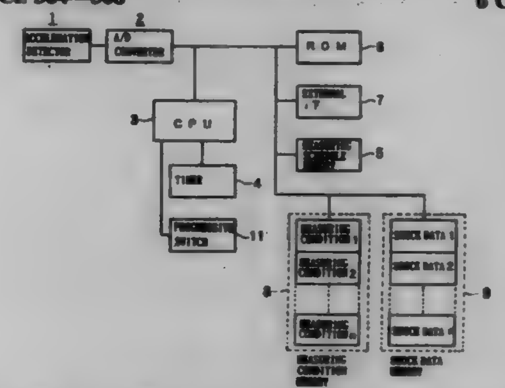

1. A shock measuring method for detecting shocks and storing detected shock data during transportation of goods over an entire transportation route which is divided into a plurality of transportation sections, said method comprising:

storing measuring conditions, respectively representing the transportation sections, in a measuring condition memory;

accessing one of the stored measuring conditions for each respective transportation section;

detecting shocks during the transportation of goods over each one of the plurality of transportation sections under the accessed stored measuring condition corresponding to said one of the plurality of transportation sections; and

storing detected shock data for each detected shock in a shock data memory.

5,701,258
WIRELESS PAGER WITH PRESTORED IMAGES AND METHODS AND SYSTEMS FOR USE THEREWITH
Daryl Robert Harris, Evanston; Shrirang Nilkanth Jambhekar; William Louis Reber, both of Schaumburg; Bruce Edward Stuckman, Algonquin, all of Ill., and Cary Drake Perttunen, Shelby Township, Mich., assignors to Motorola, Inc., Schaumburg, Ill.
Filed Dec. 29, 1994, Ser. No. 366,156
Int. Cl.⁶ H04Q *7/00;* **G08B** *5/22*
U.S. Cl. 364—514 R **34 Claims**

33. A system for forming a message for a wireless pager, the system comprising:

a camera which captures at least one image;

a user interface that allows a user to select a image from a plurality of predetermined images;

a storage device that contains the plurality of predetermined images:

a display device that displays at least one combined image based upon the at least one image and the selected image; and

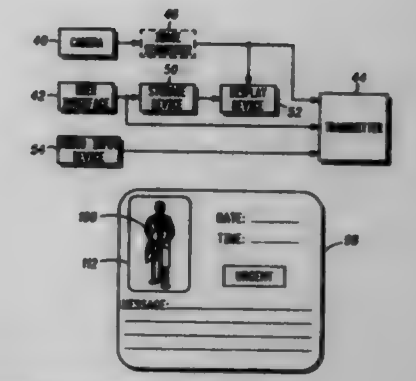

a transmitter responsive to the camera.

5,701,259
METHOD FOR STABILIZING THE DIRECTIONAL DISPLAY OF MAGNETIC COMPASSES
Frank Dittrich, Rebstein, Switzerland, assignor to Leica AG, Wetzlar, Germany
Filed Nov. 6, 1995, Ser. No. 553,833
Claims priority, application Germany, Nov. 9, 1994, 44 39 945.6
Int. Cl.⁶ G01C *17/38*
U.S. Cl. 364—571.01 **13 Claims**

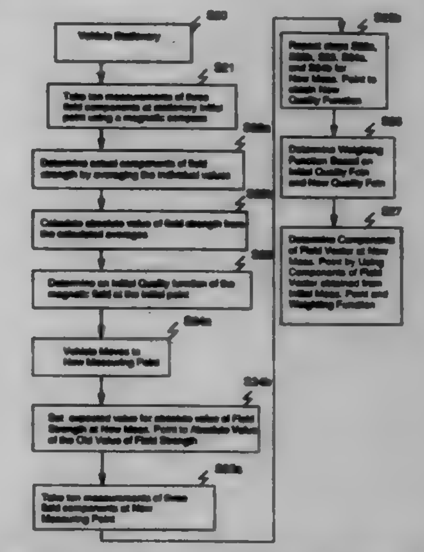

1. A method for stabilizing a directional display of magnetic compasses on bodies moving in a magnetic field, against magnetically hard or magnetically soft interfering sources, said method comprising the steps of:

a) measuring three spatial components B^1_{ai}, B^2_{ai}, B^3_{ai} as a respective field vector B_{ai} of the magnetic field at a first measuring point P_a which is located in an interference-free region in the magnetic field, the measuring being made in a prescribed spatial coordinate system $R(x_1,x_2,x_3)$ within a first measurement region, at successive instants t_i, for i measurements, i being an integer greater than or equal to two;

b) using the measured three spatial components B^1_{ai}, B^2_{ai}, B^3_{ai} of the respective field vector B_{ai} to calculate, at the first measuring point P_a, three spatial components B^1_a, B^2_a, B^3_a;

c) calculating an absolute value of the magnetic field strength $|B_a|$ from the measured three spatial components B^1_{ai}, B^2_{ai}, B^3_{ai} for each successive instant t_i at the at least one measuring point P_a, wherein temporal changes in the measured three spatial components B^1_{ai}, B^2_{ai}, B^3_{ai} are taken into account;

d) determining a first quality function Q_i on the basis of at least one of the calculated absolute values $|B_{ai}|$ and the measured three spatial components B^1_{ai}, B^2_{ai}, B^3_{ai}, said first quality function Q_i being a measure of a temporal distribution of the

measured three spatial components B^1_{ai}, B^2_{ai}, B^3_{ai}, measured at the first measuring point P_a at the successive instants t_i, and said first quality function Q_i also being a measure of quality of a value corresponding to the magnetic field strength;

e) determining an estimated absolute value $|B_{bj}|$ and estimated components B^1_{bj}, B^2_{bj}, B^3_{bj} as a second field vector B_k at a second measuring point P_b and at a second instant t_j on the basis of at least one of the calculated absolute value $|B_{ai}|$ and the measured three spatial components B^1_{ai}, B^2_{ai}, B^3_{ai}, measured in the first measurement region, to obtain components B^1_{aj}, B^2_{aj}, B^3_{aj}, wherein the second measuring point P_b is situated in a second measurement region separate from the first measurement region, and the second instant t_j is later than any of the successive instants t_i, and wherein the temporal changes in the measured three spatial components B^1_{ai}, B^2_{ai}, B^3_{ai} are taken into account;

f) measuring components B^1_{bk}, B^2_{bk}, B^3_{bk} of the second field vector B_k at the second measuring point P_b and at a third instant t_k which is later than the successive instants t_i;

g) calculating an absolute value of the magnetic field strength $|B_{bk}|$ from the components B^1_{bk}, B^2_{bk}, B^3_{bk}, measured at the second measuring point P_b and at the third instant t_k;

h) determining, on the basis of the calculated absolute value $|B_{bk}|$ and the respective measured components B^1_{bk}, B^2_{bk}, B^3_{bk}, of the second field vector B_k, a second quality function Q_k which is a measure of a temporal distribution of the components B^1_{bk}, B^2_{bk}, B^3_{bk}, measured at the second measuring point P_b and at the third instant t_k and which is a measure of a quality of a value representing the magnetic field strength;

i) determining a weighting function G_k as a function of the first quality function Q_i at the first measuring point P_a at the successive instants t_i and as a function of the second quality function Q_k at the second measuring point P_b at the third instant t_k; and

j) weighing the components B^1_{bk}, B^2_{bk}, B^3_{bk}, with the weighting function G_k for the components B^1_{aj}, B^2_{aj}, B^3_{aj} obtained as an estimate for the second measurement region, such that a stabilized magnetic field vector B^{stab} with stabilized components B^{stab1}_k, B^{stab2}_k, B^{stab3}_k is obtained as a result thereof.

5,701,260

MULTIPLIER USING CHARGE TRANSFER DEVICE

Yasuo Nagazumi, Tokyo, Japan, assignor to G.D.S. Co., Ltd., Tokyo, Japan

Filed Jun. 5, 1995, Ser. No. 463,779

Claims priority, application Japan, Aug. 3, 1994, 6-200255

Int. Cl.⁶ G06J *1/00*

U.S. Cl. 364—606 **6 Claims**

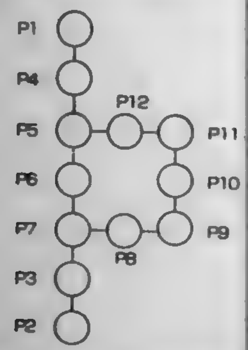

1. A multiplier using a charge transfer device comprising:

at least eight independent potential wells arranged in a ring which store multiplicand input charge signal packets prior to beginning a multiplication operation wherein each of said at least eight independent potential wells is controlled by voltage signal sequences, determined by digital multiplier input data; and

at least one charge signal accumulator, having a set of independently controlled potential wells, connected in series to at least one of said at least eight independent potential wells in the ring, wherein said at least one charge signal accumulator collects and accumulates charge signal packets to selectively form a multiplication result output signal.

5,701,261

DYNAMIC FILTER

Jonathan Paul Evans, Warley, United Kingdom, assignor to GEC Avery Limited, United Kingdom

Continuation-in-part of Ser. No. 564,912, Nov. 30, 1995, abandoned, which is a continuation of Ser. No. 263,795, Jun. 22, 1994, abandoned. This application Apr. 2, 1996, Ser. No. 626,604

Int. Cl.⁶ G06F *17/10*

U.S. Cl. 364—724.01 **2 Claims**

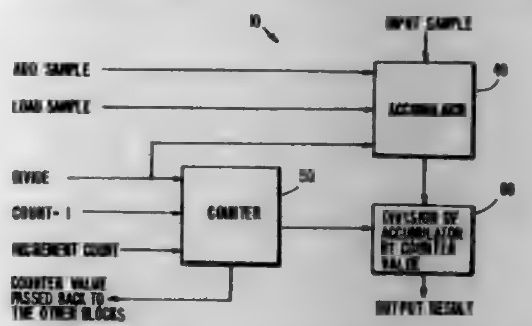

1. A filter, comprising: a variable length quasi-average filter, the averaging length of which is increased at each input sample and which is decreased by a predetermined factor when the averaging length reaches a maximum value; and a spike counter, the count of which is incremented when the difference between an input sample and the current filter output exceeds a predetermined value, the sample count being reset to 1 when the spike count reaches a predetermined value, the filter output being otherwise maintained at the previous output.

5,701,262

TAB COEFFICIENT UPDATING DEVICE OF FINITE IMPULSE-RESPONDING ADAPTIVE DIGITAL FILTER

Geum Ock Lee, and Gyun Seog Yang, both of Seoul, Rep. of Korea, assignors to Hyundai Electronics Industries Co., Ltd., Kyungki-Do, Rep. of Korea

Filed Mar. 7, 1995, Ser. No. 399,413

Claims priority, application Rep. of Korea, Mar. 7, 1994, 94-4370

Int. Cl.⁶ G06F *17/10*

U.S. Cl. 364—724.19 **8 Claims**

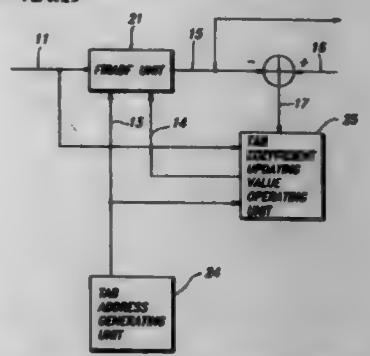

1. A finite impulse-responding adaptive digital filter system, comprising:

a finite impulse-responding adaptive digital filter unit for filtering an input signal using a tab address signal and a tab coefficient signal, wherein the tab coefficient signal has been updated for a predetermined tab of a plurality of tabs;

a tab address generating unit for generating the tab address signal associated with the predetermined tab of the finite impulse-responding adaptive digital filter unit; and

a tab coefficient updating value operating unit for receiving the tab address signal, the input signal and an error signal indicative of a difference between an output signal of the finite impulse-responding adaptive digital filter unit and a requirement signal, and for executing an operation of updating the tab coefficient signal designated by the tab address signal.

5,701,263

INVERSE DISCRETE COSINE TRANSFORM PROCESSOR FOR VLSI IMPLEMENTATION

Juan Pineda, San Francisco, Calif., assignor to Hyundai Electronics America, San Jose, Calif.

Filed Aug. 28, 1995, Ser. No. 520,044

Int. Cl.⁶ G06F *17/14*

U.S. Cl. 364—725 **20 Claims**

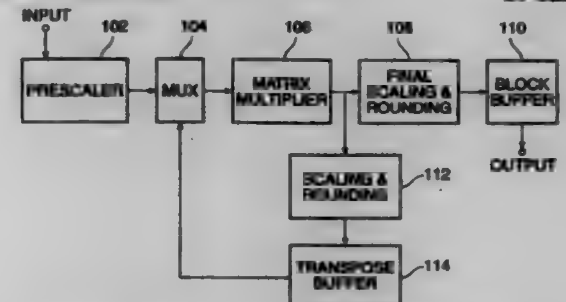

1. An inverse discrete cosine transform (IDCT) processor comprising:

a pre-scaler that receives a series of DCT coefficients and multiplies each said coefficient in said series by a prescaling factor that varies in accordance with a predetermined function of coefficient position within said series and that provides a series of prescaled DCT coefficients as an output signal; and

a matrix multiplier operative to receive said series of prescaled DCT coefficients as an input and that provides as a final output signal a series of values representing a product of said series of prescaled DCT coefficients and a predetermined IDCT coefficient matrix of size NXN, wherein said predetermined IDCT coefficient matrix is selected to match said predetermined function so that said final output signal represents an inverse discrete cosine transform of said series of DCT coefficients and wherein the elements of said predetermined IDCT coefficient matrix have no more than N/2 distinct non-unity magnitudes.

5,701,264

DYNAMIC RANDOM ACCESS MEMORY CELL HAVING INCREASED CAPACITANCE

Ritu Shrivastava, Fremont, and Chitranjan N. Reddy, Los Altos Hills, both of Calif., assignors to Alliance Semiconductor Corporation, San Jose, Calif.

Continuation of Ser. No. 571,393, Dec. 13, 1995, abandoned. This application Jan. 31, 1997, Ser. No. 792,460

Int. Cl.⁶ H01L *27/108*

U.S. Cl. 365—149 **20 Claims**

1. In a dynamic random access memory (RAM) formed on a semiconductor substrate, a memory cell having improved capacitance, comprising:

a conductive contact member;

a conductive layered member formed from a plurality of stacked conductive members in electrical contact with one another, said layered member having a peripheral side surface with at least one inset peripheral furrow therein defined by the stacked conductive members and a generally vertical contact hole therein, forming an inner generally vertical hole surface,

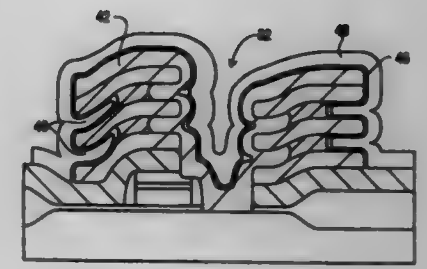

the contact hole extending through said layered member to a portion of the substrate, the contact member extending into the hole and making electrical contact with the layered member and a portion of the substrate, the layered member and contact member collectively forming a conductive member having an outer surface;

a capacitor dielectric covering the outer surface of said stacked member;

a conductive plate member covering at least a portion of the capacitor dielectric; and

an active device in contact with either said conductive plate member or said conductive contact member, said active device including a first terminal coupled to the portion of the substrate, a second terminal and a third terminal for controlling the conductive path between the first and second terminal.

5,701,265

SERIAL DICHOTOMIC METHOD FOR SENSING MULTIPLE-LEVEL NON-VOLATILE MEMORY CELLS, AND SENSING CIRCUIT IMPLEMENTING SUCH METHOD

Cristiano Calligaro, Pavia; Vincenzo Daniele; Roberto Gastaldi, both of Milan; Alessandro Manstretta, and Guido Torelli, both of Pavia, all of Italy, assignors to SGS-Thomson Microelectronics S.r.l., Agrate Brianza, Italy

Filed Jan. 29, 1996, Ser. No. 593,650

Claims priority, application European Pat. Off., Jan. 27, 1995, 95830023

Int. Cl.⁶ G11C *11/34*

U.S. Cl. 365—185.03 **28 Claims**

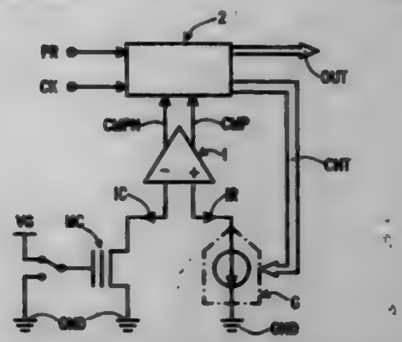

1. In a multiple-level memory cell capable of storing a program level among a plurality of program levels, a method of obtaining the stored program level of the memory cell, comprising the steps of:

(a) dividing the plurality of program levels into a first portion and a second portion;

(b) comparing the current draw of the memory cell with a reference current to determine whether the stored program level is included in the first portion or the second portion;

(c) selecting the first; portion as the plurality of program levels if the stored program level is included in the first portion, and selecting the second portion as the plurality of program levels if the stored program level is included in the second portion;

(d) repeating steps (a)–(c) until the selected portion contains only one program level; and
(e) equating the stored program level to the only one program level.

5,701,266
PROGRAMMING FLASH MEMORY USING DISTRIBUTED LEARNING METHODS
Albert Fazio, Los Gatos; Gregory E. Atwood, San Jose; James O. Mi, Sunnyvale, and Paul Ruby, Folsom, all of Calif., assignors to Intel Corporation, Santa Clara, Calif.
Continuation of Ser. No. 572,077, Dec. 14, 1995, abandoned. This application Dec. 6, 1996, Ser. No. 760,928
Int. Cl.⁶ G11C *27/00*
U.S. Cl. 365—185.03 **22 Claims**

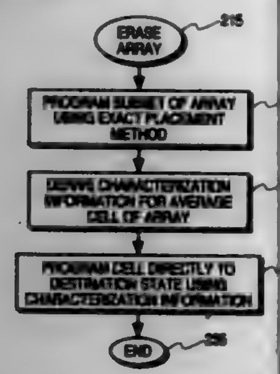

1. In a memory device including an array of memory cells, each memory cell having more than 2 possible states, a method for programming a memory cell to a desired state, comprising:
a control engine programming a subset of the array of memory cells;
determining characterization information from the step of programming the subset, the characterization information indicating programming characteristics of a representative memory cell of the array of memory cells; and
the control engine using the characterization information to directly program the memory cell to approximately the desired state without performing a program verify operation.

5,701,267
SEMICONDUCTOR STORAGE DEVICE WITH MACRO-CELL WITH MONITORING OF INPUT DATA
Shinichi Masuda; Satoshi Kumaki, and Yoshinori Matsuura, all of Tokyo, Japan, assignors to Mitsubishi Electric Engineering Co., Ltd., and Mitsubishi Denki Kabushiki Kaisha, both of Tokyo, Japan
Filed Dec. 27, 1995, Ser. No. 578,892
Claims priority, application Japan, Aug. 18, 1995, 7-210608
Int. Cl.⁶ G11C *13/00*
U.S. Cl. 365—201 **17 Claims**

1. A semiconductor storage device, comprising:
a macro-cell provided inside of a semiconductor integrated circuit;
said macro-cell comprising:
an input port;
a memory cell capable of independently performing writing of data inputted from said input port and reading of said data;
an output port for outputting said data read from said memory cell in a normal operation; and

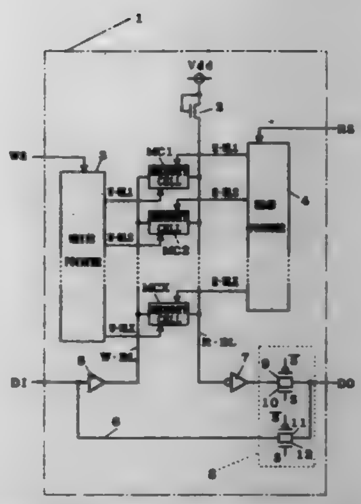

bypass means for connecting said input port to said output port to transmit said data inputted from said input port to said output port without passing through said memory cell and without passing through a storage register in a test mode.

5,701,268
SENSE AMPLIFIER FOR INTEGRATED CIRCUIT MEMORY DEVICES HAVING BOOSTED SENSE AND CURRENT DRIVE CAPABILITY AND METHODS OF OPERATING SAME
Kyu-chan Lee, Seoul; Sang-bo Lee, and Jai-hoon Sim, both of Kyungki-do, all of Rep. of Korea, assignors to Samsung Electronics Co., Ltd., Suwon, Rep. of Korea
Filed Aug. 23, 1996, Ser. No. 701,892
Claims priority, application Rep. of Korea, Aug. 23, 1995, 95-26185
Int. Cl.⁶ G11C *7/06*
U.S. Cl. 365—205 **17 Claims**

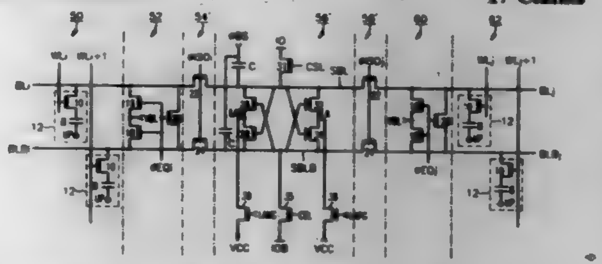

1. An integrated circuit memory device, comprising:
first and second memory cells electrically coupled to first and second sense bit signal lines;
means, having at least one control input, for amplifying a difference in potential between the first and second sense bit signal lines by driving the first and second sense bit signal lines to respective first and second different potentials, in response to application of a first control signal to the at least one control input; and
means, coupled to the first and second sense bit signal lines, for driving both the first and second sense bit signal lines towards the first potential, in response to application of a boost control signal prior to amplification of the difference in potential between the first and second sense bit signal lines.

5,701,269
SEMICONDUCTOR MEMORY WITH HIERARCHICAL BIT LINES
Yasuhiro Fujii, Kawasaki, Japan, assignor to Fujitsu Limited, Kawasaki, Japan
Continuation-in-part of Ser. No. 491,762, Jun. 19, 1995, Pat. No. 5,561,626. This application Jun. 25, 1996, Ser. No. 668,332
Claims priority, application Japan, Nov. 28, 1994, 6-293050; Feb. 15, 1996, 8-028030; Mar. 4, 1996, 8-045712
Int. Cl.⁶ G11C *7/00*
U.S. Cl. 365—210 **14 Claims**

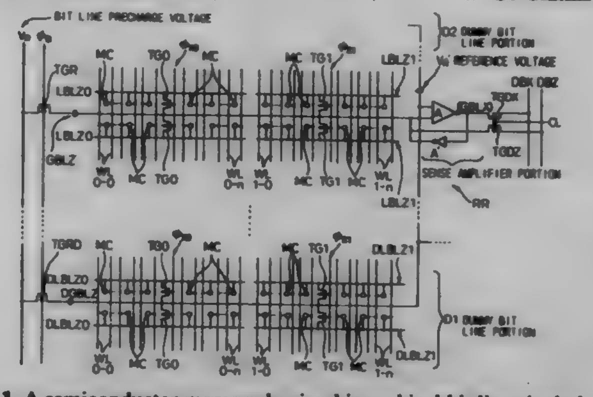

1. A semiconductor memory having hierarchical bit lines including a plurality of local bit lines and a plurality of global bit lines, comprising:
a plurality of word lines;
a plurality of memory cells each arranged at a connection portion between each of said local bit lines and each of said word lines;
a read amplifier for amplifying the difference between the voltage of a corresponding one of said global bit lines and a sensing reference voltage; and
a dummy bit line portion having a dummy bit line that is charged up to a precharging reference voltage during a standby period and is set to a floating state during an active period, to provide the sensing reference voltage.

5,701,270
SINGLE CHIP CONTROLLER-MEMORY DEVICE WITH INTERBANK CELL REPLACEMENT CAPABILITY AND A MEMORY ARCHITECTURE AND METHODS SUITBLE FOR IMPLEMENTING THE SAME
G. R. Mohan Rao, Dallas, Tex., assignor to Cirrus Logic, Inc., Fremont, Calif.
Continuation-in-part of Ser. No. 551,526, Nov. 1, 1995, Pat. No. 5,583,822, which is a continuation of Ser. No. 239,608, May 9, 1994, Pat. No. 5,473,573. This application Feb. 1, 1996, Ser. No. 595,236
Int. Cl.⁶ G11C *8/00*
U.S. Cl. 365—230.03 **26 Claims**

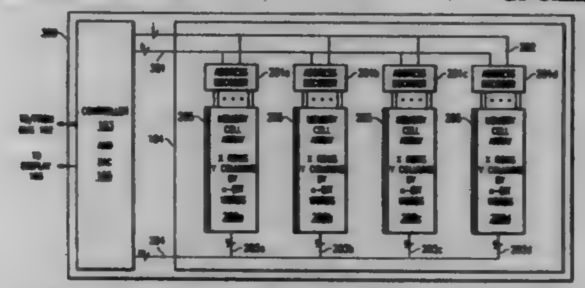

1. A memory subsystem comprising:
processing circuitry;
first and second banks of memory, each said bank including a predetermined number of primary memory cells and a predetermined number of redundant memory cells;
a primary address bus for allowing said processing circuitry to address at least one of said primary memory cells, said at least one primary memory cell residing in a primary cell memory space; and
a redundancy bus for allowing said processing circuitry to address at least one of said redundancy cells, said at least one redundancy cell residing in a redundacy cell memory space separate from said primary cell memory space.

5,701,271
INTEGRATED CIRCUIT MEMORY DEVICES INCLUDING BANKS OF MEMORY BLOCKS
Seung-hun Lee, Kyungki-do, Rep. of Korea, assignor to Samsung Electronics Co., Ltd., Suwon, Rep. of Korea
Filed Aug. 26, 1996, Ser. No. 703,203
Claims priority, application Rep. of Korea, Aug. 24, 1995, 1995-26422
Int. Cl.⁶ G11C *13/00*
U.S. Cl. 365—230.02 **13 Claims**

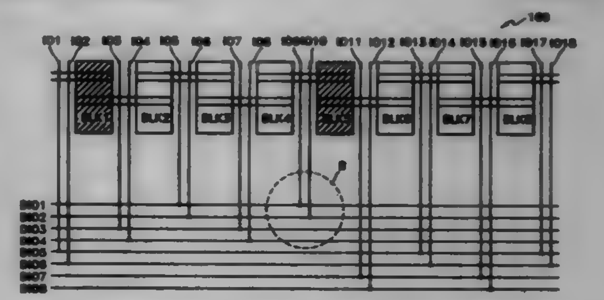

1. An integrated circuit memory device including a plurality of memory banks, wherein each of said memory banks comprises:
a first array of at least a first memory block, a second memory block, a third memory block, and a fourth memory block wherein each of said memory blocks includes first and second bit lines;
a second array of at least a fifth memory block, a sixth memory block, a seventh memory block, and an eighth memory block wherein each of said memory blocks includes first and second bit lines, and wherein each of said memory blocks from said second array is paired with a respective memory block from said first array and wherein said memory blocks are activated as pairs with at least one pair being activated during a data access operation;
four data lines adjacent said first and second arrays of memory blocks; and
a plurality of input/output lines directly connecting two of said bit lines from each of said memory blocks with two of said input output lines wherein a first bit line of said first memory block and a second bit line of said eighth memory block are connected to a first one of said data lines, wherein a second bit line of said first memory block and a first bit line of said second memory block are connected to a second data line, wherein a second bit line of said second memory block and a first bit line of said fifth memory block are connected to a third bit line, and wherein a second bit line of said fifth memory block and a first bit line of said sixth memory block are connected to a fourth data line, so that for any pair of said memory blocks, two bit lines from each memory block of said pair are connected to separate data lines.

5,701,272

NEGATIVE VOLTAGE SWITCHING CIRCUIT

James Brennan, Jr., Saratoga, Calif., assignor to Intel Corporation, Santa Clara, Calif.

Continuation of Ser. No. 488,040, Jun. 7, 1995, abandoned. This application Sep. 30, 1996, Ser. No. 723,666

Int. Cl.⁶ G11C *7/00*

U.S. Cl. 365—230.06 **18 Claims**

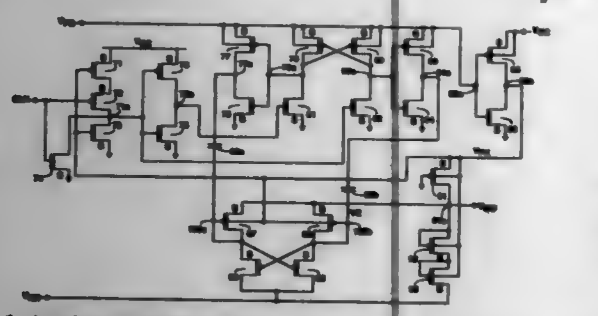

1. A voltage switching circuit, comprising:

(A) a low power switching circuit for selectively coupling a first voltage having a voltage level substantially lower than zero volts to an output of the low power switching circuit; and

(B) a control circuit coupled to the low power switching circuit for controlling the low power switching circuit to couple the first voltage to the output by generating a second voltage having a voltage level lower than that of the first voltage from a third voltage having a voltage level substantially higher than zero volts, the control circuit including first and second capacitors alternatingly coupled to the low power switching circuit to generate the second voltage.

5,701,273

MEMORY DEVICE

Jae Myoung Choi, Ichon, Rep. of Korea, assignor to Hyundai Electronics Industries Co., Ltd., Rep. of Korea

Filed Oct. 25, 1996, Ser. No. 736,959

Claims priority, application Rep. of Korea, Oct. 27, 1995, 95-37694

Int. Cl.⁶ G11C *8/00*

U.S. Cl. 365—230.08 **6 Claims**

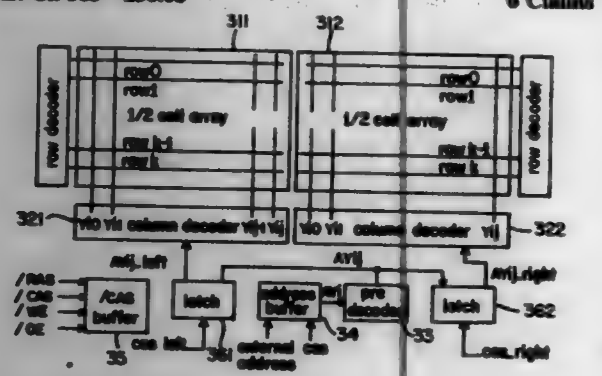

1. A memory device comprising:

first and second arrays of memory cells, each array having a plurality of columns and a plurality of rows;

an address buffer having a plurality of inputs coupled to receive external address information;

a predecoder having a plurality of inputs coupled to a respective plurality of outputs of said address buffer;

a first latch and a second latch each having an input coupled to an output of said predecoder;

first and second column decoders having outputs respectively coupled to said first and second arrays of memory cells for driving said plurality of columns, and inputs respectively coupled to outputs of said first and second latch; and

a CAS buffer for generating internal column address strobe (cas) signals consisting of first and second internal cas signals in response to an external CAS signal;

wherein the address buffer receives the internal cas signals consisting of first and second internal cas signals, and said first and said second latches respectively receive the first and second internal cas signals to alteratively address each of the memory arrays to eliminate a predetermined precharge time of the external CAS signal.

5,701,274

SEMICONDUCTOR DEVICE WITH SELECTABLE DEVICE INFORMATION

Takao Akaogi, and Masanobu Yoshida, both of Kawasaki, Japan, assignors to Fujitsu Limited, Kawasaki, Japan

Continuation of Ser. No. 155,143, Nov. 22, 1993, abandoned. This application Jun. 6, 1995, Ser. No. 466,665

Claims priority, application Japan, Dec. 4, 1992, 4-325578

Int. Cl.⁶ G11C *8/00*

U.S. Cl. 365—230.01 **21 Claims**

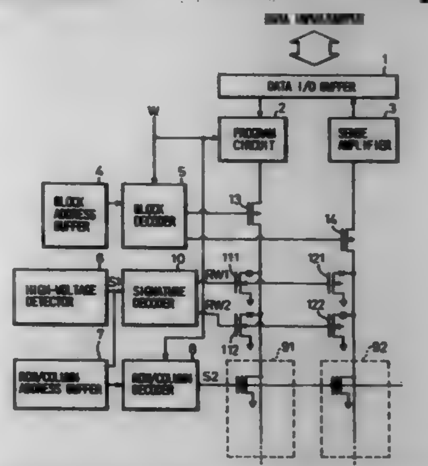

1. A semiconductor device having a function of reading device information specific to the device as and when required, said semiconductor device comprising:

a storage means for storing plural pieces of device information;

a selection signal generation means for generating a selection signal where selection information indicating specific device information to be selected is programmed; and

a selection means for selecting a predetermined one of the information pieces stored in said storage means in accordance with the selection signal generated by said selection signal generation means when a device information read mode is set so that the selected and read device information is matched with device data indicating said semiconductor device.

5,701,275

PIPELINED CHIP ENABLE CONTROL CIRCUITRY AND METHODOLOGY

David Charles McClure, Carrollton, Tex., assignor to SGS-Thomson Microelectronics, Inc., Carrollton, Tex.

Filed Jan. 19, 1996, Ser. No. 588,730

Int. Cl.⁶ G11C *8/00;7/00*

U.S. Cl. 365—233 **15 Claims**

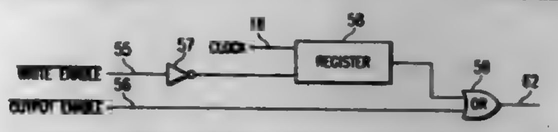

1. Circuitry which provides select and deselect control of a synchronous memory device, comprising:

a chip enable control circuit comprising:

a first storage element having a chip enable signal as an input signal and a first clock signal as a control input signal and generating a first output signal;

a second storage element having the first output signal coupled to the second storage element as an input signal and a second clock signal as a control input signal and generating a second output signal;

a first logic element having the first output signal as an input signal and the second output signal as an input signal and generating a chip enable output disable signal;

wherein the first storage element responds to the first clock signal during a first phase of the first clock signal and the second storage element responds to the second clock signal during a second phase of the first clock signal;

an output driver tri-state control circuit comprising:

a third storage element having the chip enable output disable signal as an input signal and a third clock signal as a control input signal and generating a third output signal;

a second logic element having the third output signal as an input signal and a control signal as an input signal and generating a fourth output signal at a first node;

a third logic element having the chip enable output disable signal as an input signal and the control signal as an input signal and generating a fifth output signal at a second node;

a first passgate element having the fourth output signal as an input signal, a first control terminal controlled by the third clock signal, a second control terminal controlled by the third clock signal and generating a sixth output signal;

a second passgate element having the fifth output signal as an input signal, a first control terminal controlled by the third clock signal, a second control terminal controlled by the third clock signal and generating a seventh output signal, wherein the sixth output signal and the seventh output signal are connected to form an internal output enable signal;

a first transistor element having a first terminal connected to a first supply voltage and a control terminal connected to the second node;

a second transistor element having a first terminal connected to a second terminal of the first transistor element and a control terminal connected to the first node;

a third transistor element having a first terminal connected to a second terminal of the second transistor element, a second terminal connected to a second supply voltage and a control terminal connected to the second node;

a fourth transistor element having a first terminal connected to the second terminal of the first transistor element and the first terminal of the second transistor element to form an internal output disable signal and a control terminal coupled to the control terminal of the first passgate element;

an inverter element having an input terminal connected to the second node and an output terminal coupled to a second terminal of the fourth transistor element;

wherein the third storage element will respond to the third clock signal, the second passgate element will respond to the third clock signal and the fourth transistor element will respond to the third clock signal during the first phase of the third clock signal and the first passgate element responds to the third clock signal during the second phase of the third clock signal; and

an output buffer circuit comprising:

a fourth storage element having a data signal as an input signal and a fourth clock signal as a control input signal and generating an eighth output signal; and

an output buffer control circuit having the eighth output signal as an input signal, the internal output enable signal as an input signal and the internal output disable signal as an input signal and producing a data output signal;

wherein the fourth storage element conducts during the first phase of the fourth clock signal.

5,701,276

UNDERWATER COMMUNICATION SYSTEM BY MEANS OF CODED PULSES

Pierluigi Bellini, Via Silvagni, 27, Bologna, Italy, 40100

Filed Apr. 8, 1996, Ser. No. 629,236

Claims priority, application Italy, Apr. 11, 1995, BO95A0160

Int. Cl.⁶ H04B *11/00*

U.S. Cl. 367—133 **18 Claims**

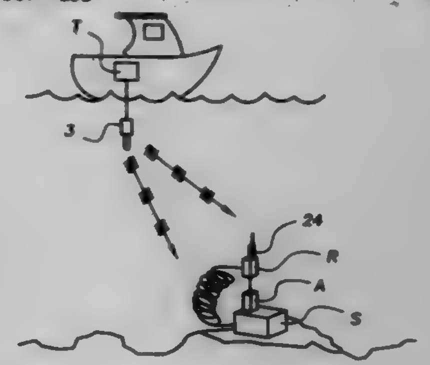

18. An underwater communication system by means of coded pulses, comprising:

transmitter means, placed at a surface of a body of water, for transmitting digitized, single frequency, coded pulses as ultrasonic signals with bits of the coded pulses separated by a predetermined pause and the coded pulses including a proprietary key, said key being characterized by three parameters as follows:

(a) a single preset frequency,

(b) a preset time between two consecutive bits, and

(c) a digital numeric code,

said transmitter means including:

a transmitter circuit for generating said coded pulses, said transmitter circuit including first memory means pre-programmed with a binary code corresponding to said coded pulses, and

an underwater piezoelectric transducer for submersion in the water and electrically connected with said transmitter circuit for transmitting said coded pulses through said water;

underwater receiver means for receiving the transmitted coded pulses, without any physical connection between the transmitter means and receiver means, and which performs a function in response to said coded pulses when said proprietary key is properly identified, said receiver means including:

an underwater piezoelectric transducer, submerged in said water, for receiving said transmitted coded pulses, and

a receiver circuit for comparing said received code pulses with stored coded pulses, said receiver circuit including:

amplifier means for amplifying said received coded pulses,

an internal clock generator for generating a clock signal,

means for synchronizing the received and amplified coded pulses with the generated clock signal,

second memory means pre-programmed with said binary code corresponding to said coded pulses, and

comparator means for comparing the received coded pulses with said code pre-programmed into said second memory means, to verify that said received coded pulses correspond to the code pre-programmed into said second memory means; and

actuator means for releasing a submerged object in response to verification by said comparator means that said received coded pulses correspond to the code pre-programmed into said second memory means.

5,701,277

ELECTRO-ACOUSTIC TRANSDUCERS

Martin D. Ring, Portsmouth; Roger Mark, Barrington; Peter F. Flanagan, Cranston; Patrick M. Brogan, Bristol, and James R. Sturges, Barrington, all of R.I., assignors to Raytheon Company, Lexington, Mass.

Continuation of Ser. No. 619,771, Nov. 28, 1990, abandoned. This application Jan. 17, 1997, Ser. No. 779,580

Int. Cl.[6] H04R *17/00*

U.S. Cl. 367—163 16 Claims

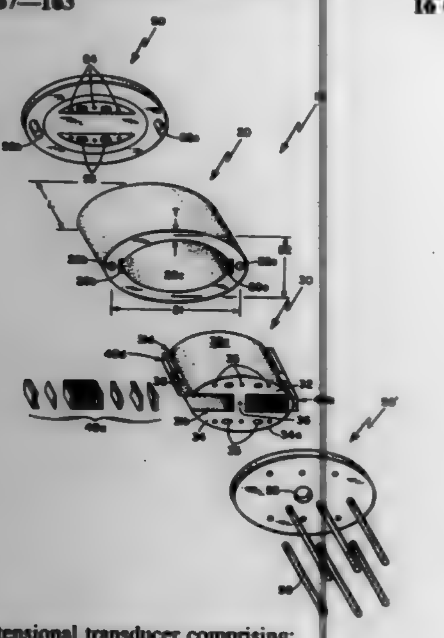

1. A flextensional transducer comprising:
a shell having inner portions;
an electromechanical driver having end portions coupled to inner portions of said shell;
means, including a support disposed in said shell, for limiting the displacement of said electromechanical driver from said shell, said support having a pair of rigid members, each member having a curved surface disposed to follow a portion of an inner surface of said shell with each curved surface being disposed proximate to a corresponding inner surface of said shell; and
an attachment member disposed between and connected to said pair of rigid members.

5,701,278

POWER SUPPLY UNIT FOR ELECTRONIC APPLIANCES

Haruhiko Higuchi; Kenji Miyasaka, and Norio Miyauchi, all of Tanashi, Japan, assignors to Citizen Watch Co., Ltd., Tokyo, Japan

PCT No. PCT/JP95/00578, § 371 Date Nov. 28, 1995, § 102(e) Date Nov. 28, 1995, PCT Pub. No. WO95/26520, PCT Pub. Date Oct. 5, 1995

PCT Filed Mar. 28, 1995, Ser. No. 553,424

Claims priority, application Japan, Mar. 29, 1994, 6-58419

Int. Cl.[6] G04B *1/00;* H02J *7/00*

U.S. Cl. 368—204 10 Claims

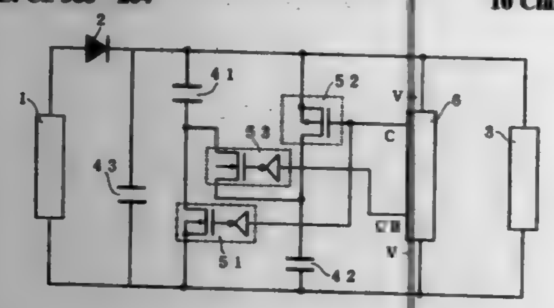

1. A power supply unit for an electronic appliance, comprising:
a power generator for generating electricity;
a power storage portion connected to the power generator and an electronic appliance, said power storage portion being formed of a plurality of cells having same capacities and arranged parallel to each other;
switches connected to the cells, one switch being connected to one cell in series, respectively, and one switch being arranged between the cells for connecting the cells in series;
a voltage detector circuit for detecting voltage supplied to the electronic appliance and providing signals to the switches so that arrangement of the cells is switched between a parallel connection and a series connection; and
an additional cell having a capacity smaller than that of the cells, said additional cell being arranged parallel to the cells so that a switching between the parallel connection and the series connection is smoothly made while a sudden voltage change in switching is absorbed.

5,701,279

OPTICAL INFORMATION RECORDING-REPRODUCING APPARATUS INCLUDING A LIGHT BEAM DETECTOR BEING DIVIDED BY A DIVISION LINE EXTENDING IN A DIRECTION PERPENDICULAR TO AN INFORMATION TRACK

Hiroaki Hoshi, Yokohama; Susumu Matsumura, Kawaguchi; Masakuni Yamamoto, Yamato, and Eiji Yamaguchi, Zama, all of Japan, assignors to Canon Kabushiki Kaisha, Tokyo, Japan

Continuation of Ser. No. 427,714, Apr. 21, 1995, abandoned, which is a continuation of Ser. No. 118,808, Sep. 9, 1993, abandoned. This application Nov. 18, 1996, Ser. No. 748,621

Claims priority, application Japan, Sep. 10, 1992, 4-266898

Int. Cl.[6] G11B *11/00;7/00*

U.S. Cl. 369—13 12 Claims

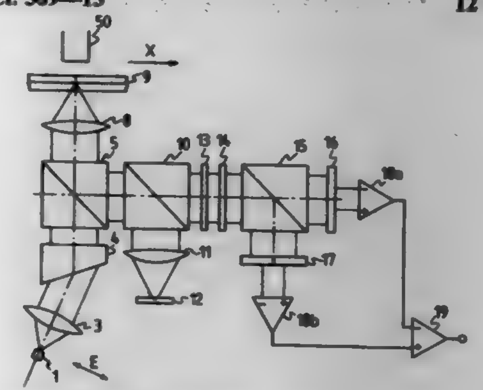

1. An optical head comprising:
applying means for applying a single spot light beam to a recording medium on which an information mark is recorded by the mark position recording method, the length of the information mark in the direction of the information track being equal to or less than the diameter of the single spot light beam;
detecting means, being divided into detecting portions by a division line extending in a direction perpendicular to an information track of the recording medium, for detecting a single light beam reflected from or transmitted through the recording medium, the single light beam being applied as a single spot light beam by said applying means;
a differential circuit for converting respective outputs from the detecting portions of said detecting means into a spatial difference signal; and
a binarizing circuit for receiving the spatial difference signal from said differential circuit and for converting the difference signal to thereby detect the central position of the information mark.

5,701,280

OPTICAL INFORMATION RECORDING AND/OR REPRODUCING APPARATUS IN WHICH A REPRODUCING LIGHT BEAM IS MODULATED WITH AT LEAST A 100 DEGREE OF MODULATION

Akira Miyashita, Tokorozawa, Japan, assignor to Canon Kabushiki Kaisha, Tokyo, Japan

Continuation of Ser. No. 254,056, Jun. 3, 1994, abandoned. This application Jan. 24, 1997, Ser. No. 789,600

Claims priority, application Japan, Jun. 7, 1993, 5-160024

Int. Cl.[6] G11B *11/00;7/00*

U.S. Cl. 369—13 5 Claims

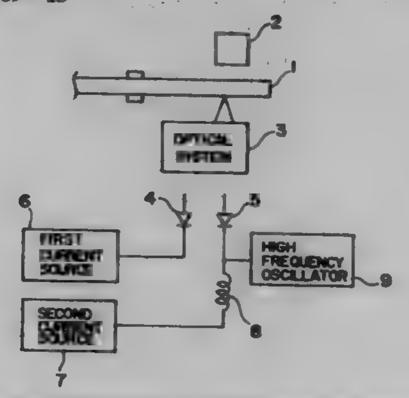

1. An optical information recording and/or reproducing apparatus comprising:
a first light source for recording or erasing information;
first driving means for modulating a light beam from said first light source in accordance with a recording signal;
a second light source for verification;
second driving means, different from said first driving means, for supplying current to said second light source to cause said second light source to emit a reproducing light beam, wherein the light beam from said first light source leads on an information track on an optical recording medium, the light beam from said second light source follows on the information track, and based on reflected light from the optical recording medium, of the light beam from said second light source, information recorded by the light beam from said first light source is reproduced for verification;
an inductor disposed in a current supply path from said second driving means to said second light source, said inductor having an impedance sufficiently larger than an impedance of said second light source at a frequency of the recording signal; and
a high-frequency oscillator for modulating a light output from said second light source, said oscillator applying a high-frequency current having a frequency sufficiently higher than the frequency of the recording signal, wherein a degree of modulation of the light output from said second light source by said high-frequency oscillator is at least 100% and said high-frequency oscillator is not connected to said first light source so that when information is recorded on the recording medium, said first light source is modulated in accordance with the recording signal and said second light source is modulated by the high current of said high-frequency oscillator.

5,701,281

OPTICAL DISK DEVICE CAPABLE OF RECORDING A CONTROL PARAMETER ON UNUSED OPTICAL DISK AREA

Hideo Sano, Tokyo, Japan, assignor to NEC Corporation, Japan

Filed Jul. 11, 1996, Ser. No. 678,161

Claims priority, application Japan, Jul. 13, 1995, 7-177251; Jul. 27, 1995, 7-191747

Int. Cl.[6] G11B *17/22*

U.S. Cl. 369—32 12 Claims

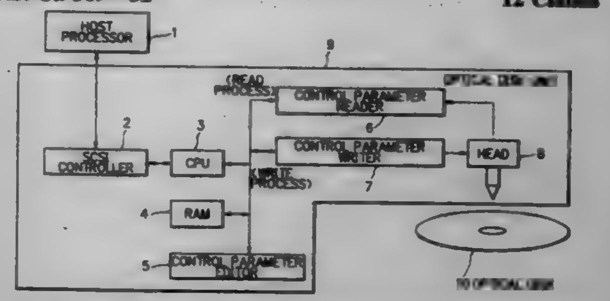

1. An optical disk device using an optical disk having an unused area in or out of a user area thereof, the optical disk device comprising:
an SCSI controller for operative connection to a host device for transferring information therebetween;
a head for writing and reading information to and from the optical disk;
a control means for controlling write action of information and read action of information by the head to and from the optical disk and an entirety of actions of the optical disk device;
a control parameter editing means for editing control parameter information in a predetermined format;
a random access memory for storing therein the control parameter information, as the control parameter information is edited by the control parameter editing means;
a control parameter writing means for writing the control parameter information, as the control parameter information is stored in the random access memory, through the head to the unused area of the optical disk, when the optical disk is to be ejected from the optical disk device; and
a control parameter reading means for reading through the head the control parameter information, as the control parameter information is written in the unused area of the optical disk, when the optical disk is inserted into the optical disk device;
wherein said host device is unable to write data to said unused area via said optical disk device.

5,701,282

OPTICAL DISK DEVICE CAPABLE OF DISPLAYING THE WHOLE CAPACITY AND THE REPRODUCTION POSITION ON THE OPTICAL DISK

Kinsei Matsumoto; Katsuki Fuchu, both of Kanagawa, and Shinji Katsuki, Tokyo, all of Japan, assignors to Sony Corporation, Tokyo, Japan

Continuation of Ser. No. 450,574, May 25, 1995, Pat. No. 5,617,383. This application Nov. 12, 1996, Ser. No. 747,443

Claims priority, application Japan, May 30, 1994, P06-137808

Int. Cl.[6] G11B *17/00*

U.S. Cl. 369—32 8 Claims

1. A recording and reproducing apparatus for a recording medium on which management data for controlling the recording or reproducing of data recorded in a data recording area has been recorded, said apparatus comprising:
head means for recording data on the recording medium or reading out recorded data from the recording medium;
recording and reproduction control means for discretely recording data on the recording medium by said head means, and for reading out data discretely recorded on the recording medium as continuous data using the management data;

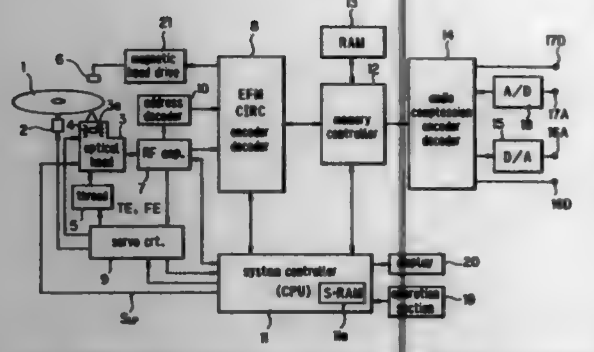

a first arithmetic operating means for arithmetically computing the current recording or reproducing position, taken in a time axial direction, of data recorded on the data recording area of the recording medium relative to the total recording time of the recording medium by using the management data read out from the recording medium by said head means;
display means; and
display control means for causing said display means to display the amount of data recorded in the data recording area relative to the recording capacity of the whole of the data recording area using the management data read out from said head means and for causing said display means to present the current recording or reproducing position using data representative of said current recording or reproducing position obtained by the arithmetic computation from said first arithmetic operating means.

5,701,283
METHOD AND APPARATUS FOR HIGH SPEED OPTICAL STORAGE DEVICE
Amir Alon, Sunnyvale, Calif.; Arie Heiman, Raanana, and Itzhak Katz, Petach-Tikva, both of Israel, assignors to Zen Research N.V., Curacao, Netherlands Antilles
Filed Nov. 15, 1995, Ser. No. 559,419
Int. Cl.[6] G11B *7/00*
U.S. Cl. 369—44.41 **20 Claims**

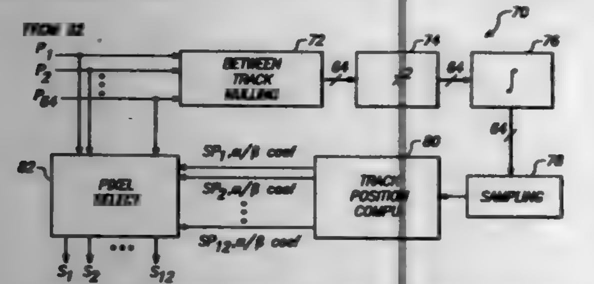

1. Apparatus for simultaneously reading multiple data tracks of an optical disk, the apparatus comprising:
an illumination source that illuminates multiple data tracks on the optical disk;
a detector for receiving illumination reflected from the optical disk and for generating a plurality of data signals corresponding to data stored in the multiple data tracks;
an optical system for directing the illumination reflected from the optical disk to the detector;
circuitry coupled to the detector for performing a between track nulling function on the plurality of data signals that determines local maxima within the plurality of data signals, outputs of the between track nulling function employed for computing track selection signals corresponding to locations of selected ones of the multiple data tracks;
selector circuitry for selecting a subset of the plurality of data signals for processing responsive to the track selection signals; and
circuitry for processing the subset of the plurality of data signals to recover information stored on the optical disk.

5,701,284
DISK ROTATION CONTROL APPARATUS AND METHOD
Dong-Jin Lee, Kwanmyeong, Rep. of Korea, assignor to Samsung Electronics Co., Ltd., Kyungki-Do, Rep. of Korea
Filed Jun. 20, 1995, Ser. No. 492,713
Claims priority, application Rep. of Korea, Jun. 22, 1994, 14361/1994
Int. Cl.[6] G11B *19/20*
U.S. Cl. 369—50 **9 Claims**

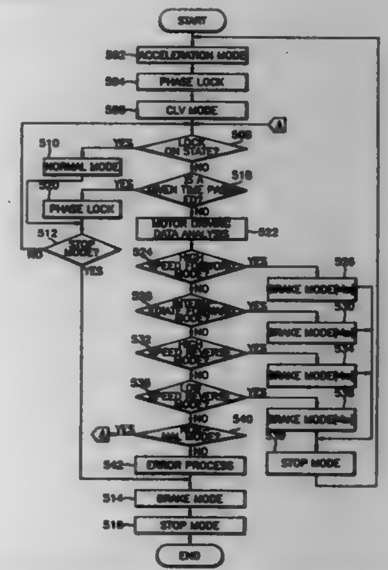

1. A disk driving apparatus for controlling rotation of a disk in a normal mode, comprising:
spindle motor means for driving the rotation of said disk according to a spindle control signal;
servo control means for generating said spindle control signal of said spindle motor according to a servo control signal;
means for converting said spindle control signal into digital data;
means for storing a rotation range data table of said spindle control signal corresponding to an abnormal rotation of said disk; and
controller means for comparing and analyzing the converted digital data with said rotation range data table, sensing normal and abnormal states based on a result of the comparing and analyzing, and generating a control signal which causes said servo control means to generate said servo control signal from the sensed results, wherein upon sensing the abnormal state said controller means causes said servo control means to generate said servo control signal which causes said spindle motor means to apply a torque which opposes a rotation direction of said spindle motor means during a predetermined time, and which immediately after the predetermined time has elapsed causes said spindle motor means to sequentially perform a stop mode and a normal driving mode.

5,701,285
OPTICAL DATA REPRODUCING APPARATUS
Hideaki Takahashi, Hachioji, Japan, assignor to Olympus Optical Co., Ltd., Tokyo, Japan
Filed Dec. 1, 1995, Ser. No. 565,779
Claims priority, application Japan, Dec. 7, 1994, 6-303510
Int. Cl.[6] G11B *7/00*
U.S. Cl. 369—59 **17 Claims**

1. An optical data reproducing apparatus for reproducing data recorded on a predetermined optical data recording medium, comprising:
converting means for converting an analog signal corresponding to data to be reproduced, to a digital data item;
data memory means for storing, in time sequence, a plurality of data items output from said converting means;

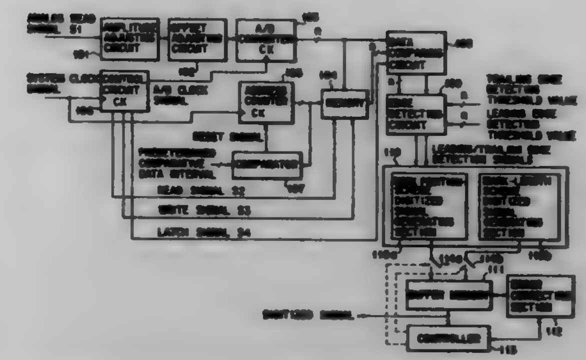

comparing means for comparing a predetermined one of previous data items stored in said data memory means which are obtained in several sequential storage operations before a present storage operation having a present data item presently being stored in the data memory means;
edge detecting means for detecting an edge of the analog signal on the basis of the comparison result; and
digitized signal generating means, comprising a mark-length scheme digitized signal generating section for generating a mark-length scheme digitized signal on the basis of an output from the edge detecting means and a mark position scheme digitized signal generating section for generating a mark position scheme digitized signal on the basis of the output from the edge detecting means.

5,701,286
SUPER-RESOLUTION OPTICAL HEAD DEVICE WHICH PRODUCES SIDE SPOTS WITHOUT SIDE LOBES
Masahiko Sato, Tokyo, Japan, assignor to NEC Corporation, Tokyo, Japan
Filed Apr. 4, 1996, Ser. No. 628,136
Int. Cl.[6] G11B *7/00*
U.S. Cl. 369—109 **12 Claims**

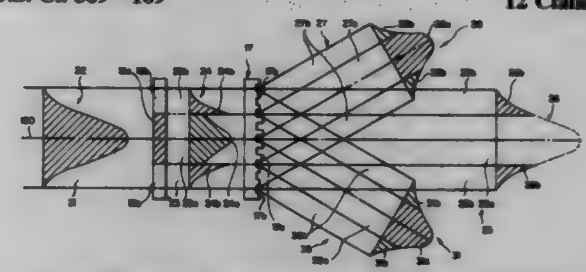

1. A super-resolution optical head device receiving an incident light beam from a light source and forming a first light beam and a pair of second light beams, said incident light beam comprising central and peripheral portions, said super-resolution optical head device comprising:
a diffraction grating having first and second areas, said first area of said diffraction grating suppressing zero order diffracted light and producing ±1th diffracted light, and said second area of said diffraction grating producing zero and ±1th order diffracted light,
wherein said first and second areas of said diffraction grating receive said central and peripheral portions of said incident light beam, respectively, the zero order diffracted light from said second area of said diffraction grating forms said first light beam with an aperture, and the ±1th order diffracted light from said first and second areas of said diffraction grating forms said pair of second light beams without an aperture.

5,701,287
OPTICAL HEAD WITH A PLURAL LAYERS COATED BEAM SPLITTER FOR LIGHT COMPONENTS SEPARATION
Satoshi Hineno, Kanagawa, and Masaki Andoh, Tokyo, both of Japan, assignors to Sony Corporation, Tokyo, Japan
Filed May 22, 1996, Ser. No. 651,373
Claims priority, application Japan, May 25, 1995, 7-150858
Int. Cl.[6] G11B *7/00;7/135*
U.S. Cl. 369—110 **6 Claims**

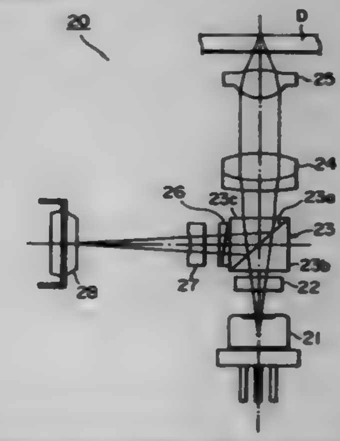

1. An optical head for recording and/or reproducing information signals by projecting a light beam from a light source so as to converge onto the signal recording surface of a magneto-optical recording medium, said optical head comprising:
said light source for emitting said beam;
an object lens by which said beam from said light source is projected so as to converge onto said magneto-optical recording medium;
a beam splitter disposed along an optical path between said light source and said object lens, for separating said beam as a divergent beam emitted from said light source and a first polarized light component or a second polarized light component different therefrom of a convergent light beam returned from the signal recording surface of said magneto-optical recording medium, via said object lens, wherein said beam splitter includes two glass blocks stuck to each other, a contact plane of adjacent surfaces of said glass blocks functions as a half mirror at an incline of 45° with respect to the optical axis, and between the adjacent surfaces of said beam splitter are plural layers of titanium oxide (TiO_2), silicon oxide (SiO_2), silicon (Si), and chromium (Cr); and
a photodetector for receiving said returned beam separated by said beam splitter,
wherein the separation rate of said first component or said second component by said beam splitter is not less than 85% and not more than 95%.

5,701,288
OPTICAL PICKUP DEVICE WITH LIGHT SPOT SIZE ADJUSTMENT FOR DIFFERENT DENSITY DISKS
Pyong-yong Seong, Seoul, Rep. of Korea, assignor to Samsung Electronics Co., Ltd., Suwon, Rep. of Korea
Filed Nov. 29, 1995, Ser. No. 564,430
Claims priority, application Rep. of Korea, Nov. 29, 1994, 1994-31843
Int. Cl.[6] G11B *7/00*
U.S. Cl. 369—112 **9 Claims**

1. An optical pickup device comprising:
a light source;
an object lens for concentrating light generated from said light source onto an optical disk;
a photodetector for detecting signals from the light reflected from the optical disk;
an optical disk detector for detecting the kind of the optical disk from the degrees of modulation of signals detected by said

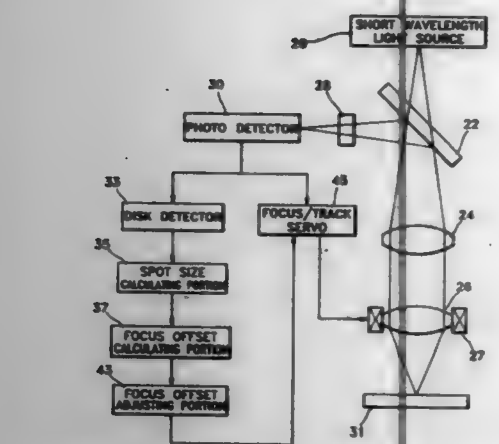

photodetector, wherein different kinds of optical disks are differentiated by the spot size with which the different kinds of optical disks are intended to operate;

a focus offset calculator for calculating a focus offset corresponding to the detected disk kind;

a focus offset adjuster for adjusting the focus offset amount calculated from said focus offset calculator and converting the adjusted focus offset amount to a focus servo signal; and

a focus/track servo for compensating for focus and track errors by utilizing the focus servo signal adjusted at said focus offset calculator and the signals detected from said photodetector.

5,701,289

OPTICAL HEAD WITH HOLOGRAM COUPLERS FOR READING AND WRITING DATA

Tsuyoshi Nagano, Tokyo, Japan, assignor to NEC Corporation, Japan

Filed Jun. 21, 1996, Ser. No. 670,714

Claims priority, application Japan, Jun. 23, 1995, 7-157402

Int. Cl.[6] G11B 7/00

U.S. Cl. 369—112 6 Claims

1. An optical head comprising:

a beam-generating means;

a slab type waveguide including a cladding, a first core and a second core, said first and second cores being formed on opposite side surfaces of said cladding;

an output coupler provided on said slab type waveguide for decoupling a beam emitted from said beam-generating means and waveguided through said second core;

a lens for focusing onto an optical recording medium a beam decoupled in said output coupler and transmitted through said cladding and said first core;

an input coupler provided on said slab type waveguide for coupling to said first core a beam reflected from said optical recording medium and led to said lens, the beam coupled to said first core by said input coupler being waveguided through said first core; and

a photoelectric transducer means for detecting the beam coupled to said input coupler and waveguided through said first core.

5,701,290

CARRIAGE LOCKING MECHANISM FOR AN OPTICAL DISK DRIVE INCLUDING A YOKE MEMBER HAVING A NOTCH FORMED THEREON

Yasushi Okada, Hadano, Japan, assignor to Ricoh Company, Ltd., Tokyo, Japan

Continuation of Ser. No. 336,786, Nov. 9, 1994, abandoned. This application Aug. 12, 1996, Ser. No. 695,544

Claims priority, application Japan, Nov. 9, 1993, 5-302214

Int. Cl.[6] G11B 17/04

U.S. Cl. 369—263 24 Claims

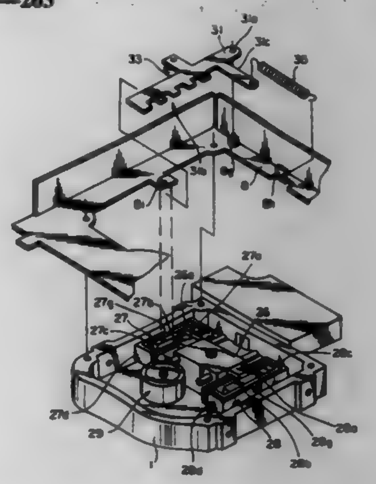

1. An optical disk drive comprising:

an optical pick-up for recording and reproducing data from an optical disk;

a carriage for moving said optical pick-up;

a seek motor for moving said carriage, said seek motor including a yoke member having a notch formed therein;

a holder member for holding a disk cartridge having an optical disk therein, said holder member being movable back and forth in interlocked relation to the movement of said disk cartridge between loading and unloading positions;

a carrier member for moving said holder member;

a base member accommodating at least said holder member;

connecting means for connecting said holder member and said carrier member and for locking said holder member and said carrier member in a predetermined position in relation to said base member; and

carriage locking means for securing said carriage in relation to said base member at least when said holder member is in said unloading position, said carriage locking means including:

an engaging member supported by said base member and rotatable in a plane parallel to said holder member, said engaging member movable between first and second positions in response to movement of said holder member and configured to move to the first position to engage and lock said carriage when said holder member is in said unloading position, and configured to move to the second position to release said carriage when said holder member is in said loading position;

a guide member associated with said base member and configured to position said engaging member such that said engaging member is aligned with said carriage at least when said holder member is in said unloading position, said guide member restricting movement of said engaging member in a direction normal to the plane parallel to said holder member, at least a portion of said guide member being provided within said notch formed in said yoke member of said seek motor; and

biasing means for biasing said engaging member toward said guide member.

5,701,291

ATM SYSTEMS

Larry G. Roberts, Woodside, Calif., assignor to The Whitaker Corporation, Wilmington, Del.

Filed Aug. 22, 1996, Ser. No. 701,264

Int. Cl.[6] H04L 12/56

U.S. Cl. 370—232 11 Claims

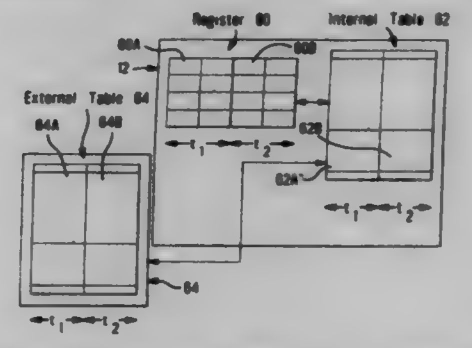

1. A method of congestion avoidance on a network using a multicast system;

wherein said network comprises:

at least one source node on said network transmitting a resource management cell on a forward path of said network;

byte fields on said resource management cell, said fields include a field detailing an explicit cell rate initially set by said at least one source node;

at least one switch node; and

at least one destination node; and

the method comprising the steps of:

receiving said resource management cell on the forward path of said network at said switch node;

creating at each said switch node a copy of said resource management cell;

transmitting said copy on said forward path on each branch of said network at each said switch node;

creating at each said switch node an extra duplicate of said resource management cell or copy of said resource management cell, received on said forward path;

transmitting at each said switch node said extra duplicate on a reverse path of said network;

transmitting at each said destination node said copy of said cell, received by each said destination node, on a reverse path of said network;

receiving at each said switch node any said cell on branch of each said switch node on said reverse path;

setting at said switch node said field detailing said explicit cell rate of said extra duplicate of said cell by each said switch node with the minimum of a prior minimum explicit cell rate or an explicit cell rate of said cell received by said switch node on said reverse path;

discarding each said cell received at each said switch node on said reverse path after said explicit cell rate of said cell has been evaluated by each said switch node; and

setting a rate of a data cell and said resource management cells transmitted by said source node at said explicit cell rate of said extra duplicate of said cell received at said at least one source node.

5,701,292

METHOD AND APPARATUS FOR CONTROLLING DATA TRANSFER RATES OF DATA SOURCES IN ASYNCHRONOUS TRANSFER MODE-BASED NETWORKS

Fabio Massimo Chiussi, Tinton Falls; Vijay Pochampalli Kumar, Freehold, both of N.J.; Christos Tryfonas, Santa Cruz, and Muddu Sudhakar, Los Angeles, both of Calif., assignors to Lucent Technologies Inc., Murray Hill, N.J.

Filed Dec. 4, 1995, Ser. No. 567,020

Int. Cl.[6] H04J 3/16; H04L 12/56

U.S. Cl. 370—232 58 Claims

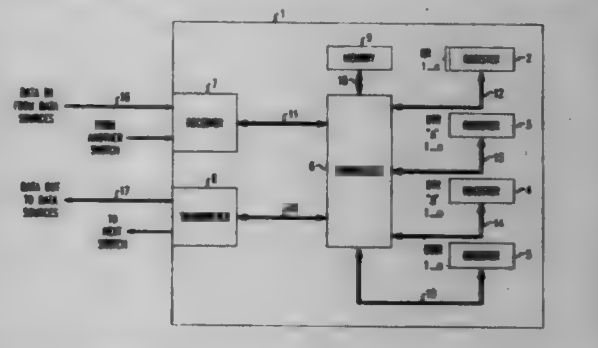

30. An apparatus for controlling data transfer rates of data sources in an asynchronous transfer mode-based network, comprising:

at least one queue length register that generates at least one first congestion indicator;

a first data transfer rate register that indicates switch maximum and switch minimum data transfer rates;

a second data transfer rate register that indicates data transfer rate information;

a data source identifying register that indicates at least one data source having a data transfer rate equal to the switch maximum data transfer rate;

a transmitter for transmitting electronic code comprising data transfer rate information to the data sources; and

a controller for monitoring the at least one first congestion indicator, switch maximum and minimum data transfer rates, and the data source identifier, for updating the switch maximum and minimum data transfer rates and data source identifier and for controlling the transmitter to transmit electronic code comprising data transfer rate information to; first data sources each having a data transfer rate greater than or equal to the switch minimum data transfer rate multiplied by a first variable and to second data sources each having a data transfer rate lower than the switch minimum data transfer rate multiplied by the first variable when the at least one congestion indicator equals or exceeds a first threshold, to all data sources when the at least one first congestion indicator equals or exceeds a second threshold, and to all data sources when the at least one first congestion indicator is less than the first threshold,

wherein the data transfer rate information transmitted to the first data sources is used by each one of the first data sources to reduce their data transfer rate, the data transfer rate information transmitted to the second data sources is used by each one of the second data sources whose data transfer rate is less than the switch maximum data transfer rate multiplied by a second variable to increase their data transfer rate, the data transfer rate information transmitted to all of the data sources is used by all of the data sources to reduce their data transfer rates when the at least one first congestion indicator equals or exceeds the second threshold, and the data transfer rate information transmitted to all of the data sources is used by all of the data sources to increase the data transfer rate of each data source whose data transfer rate is less than the switch maximum data transfer rate multiplied by the second variable when the at least one first congestion indicator is less than the first threshold.

5,701,293
TROUBLE SURVEILLANCE APPARATUS FOR A TRANSMISSION SYSTEM

Yasuo Fujii, Kanagawa, Japan, assignor to Fujitsu Limited, Kanagawa, Japan

Filed Aug. 29, 1995, Ser. No. 520,744
Claims priority, application Japan, Aug. 29, 1994, 6-203146
Int. Cl.[6] H04J *3/14;14/00*
U.S. Cl. 370—244 **21 Claims**

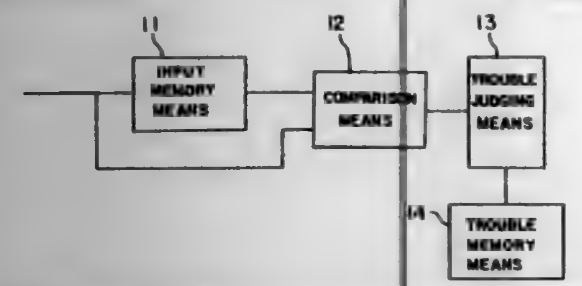

1. A trouble surveillance apparatus for transmission system comprising:

input memory means for storing data representing a state of the transmission system;

comparison means for comparing data stored in the input memory means and representing a previous state of the system with data currently inputted to the input memory means and representing a current state of the system; and

trouble judging means for firstly judging that trouble is caused when previous data does not coincide with the current data and that the trouble is judged to be a Service Affect when trouble flags are arranged to correspond to LINEs and channels, wherein at least one of the LINEs and channels correspond to a connected LINE and channel which is set.

5,701,294
SYSTEM AND METHOD FOR FLEXIBLE CODING, MODULATION, AND TIME SLOT ALLOCATION IN A RADIO TELECOMMUNICATIONS NETWORK

Torbjorn Ward, Montreal, and Anders Sandell, Dollard-des-Ormeaux, both of Canada, assignors to Telefonaktiebolaget LM Ericsson, Stockholm, Sweden

Filed Oct. 2, 1995, Ser. No. 537,457
Int. Cl.[6] H04B *7/26*
U.S. Cl. 370—252 **12 Claims**

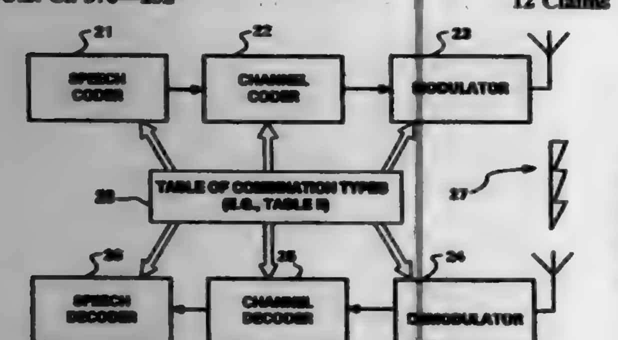

1. A system for dynamically optimizing voice quality in a digital cellular radio telecommunications network, said network having a plurality of user bit rate components that operate at set bit rates, and said network utilizing a plurality of radio channels to carry calls, said system comprising:

means for monitoring and measuring conditions on each of said radio channels, said means for monitoring and measuring having means for continuously monitoring and measuring said conditions;

means for estimating current radio channel quality for each of said radio channels;

means for changing the bit rates of each of said plurality of user bit rate components;

means for dynamically controlling said means for changing bit rates in order to provide the maximum achievable voice quality for calls on each of said radio channels; and

means for monitoring and measuring cellular network conditions that influence achievable voice quality, wherein said cellular network conditions that influence achievable voice quality include: mobile station (MS) capability; cellular network capability; and tariffs.

5,701,295
VARIABLE COMMUNICATION BANDWIDTH FOR PROVIDING AUTOMATIC CALL BACK AND CALL HOLD

Bruce Merrill Bales, Louisville, and Stephen Max Thieler, Boulder, both of Colo., assignors to Lucent Technologies Inc., Murray Hill, N.J.

Filed May 26, 1995, Ser. No. 451,296
Int. Cl.[6] H04J *3/12*
U.S. Cl. 370—271 **28 Claims**

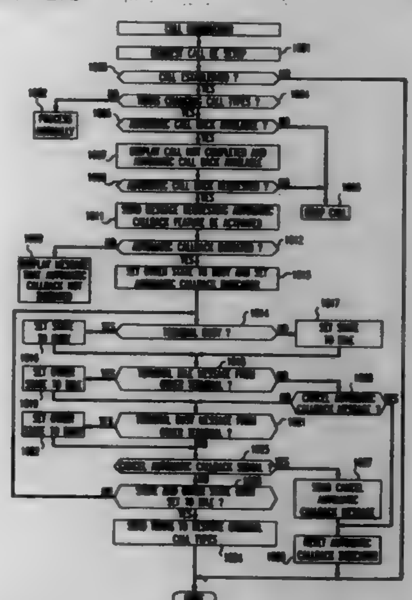

1. A method for providing telecommunication features on an existing telecommunication call by telecommunication terminals and the telecommunication call is established through a telecommunication system over a telecommunication call path between a calling telecommunication terminal and a called telecommunication terminal, the method comprising the steps of:

detecting initiation of a first portion of an automatic call back feature on the existing telecommunication call;

adjusting the telecommunication bandwidth of the call to an amount to implement the first portion of the automatic call back feature by transmission of a first message for changing the telecommunication bandwidth through out the whole telecommunication call path;

detecting initiation of a second portion of the automatic call back feature; and

adusting the telecommunication bandwidth of the call to an amount to implement the second portion of the automatic call back feature by transmission of a second message for changing the telecommunication bandwidth through out the whole telecommunication call path.

5,701,296
RELIABLE BURST SIGNAL DETECTING APPARATUS

Hideyuki Yamauchi, Fukushima, Japan, assignor to NEC Corporation, Tokyo, Japan

Filed Feb. 9, 1996, Ser. No. 599,353
Claims priority, application Japan, Feb. 10, 1995, 7-023063
Int. Cl.[6] H03K *5/1534*
U.S. Cl. 370—282 **23 Claims**

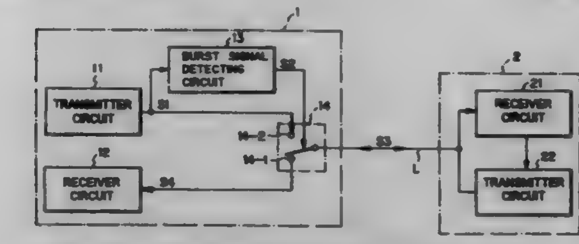

1. A burst signal detecting apparatus comprising:

a falling edge detecting means for detecting a falling edge in a burst signal to generate a first pulse signal when a low level of said burst signal continues for a first time period after said falling edge is detected in said burst signal;

a rising edge detecting means for detecting a rising edge in said burst signal to generate a second pulse signal when a high level of said burst signal continues for said first time period after said rising edge is detected in said burst signal;

a means for logically adding said first pulse signal to said second pulse signal, to generate a burst signal detection signal,

said first time period being shorter than a minimum time period of one bit of said burst signal,

a pulse width of each of said first pulse signal and said second pulse signal being longer than a time period of a predetermined number of bits of said burst signal.

5,701,297
DATA OVER CELLULAR

John Steven Csapo, Glenview; James Peter Aldrich, Glendale Heights, and Ben Douglas Gay, Inverness, all of Ill., assignors to Motorola, Inc., Schaumburg, Ill.

Continuation of Ser. No. 958,588, Oct. 8, 1992, abandoned, which is a continuation-in-part of Ser. No. 413,157, Sep. 27, 1989, abandoned. This application Jul. 28, 1994, Ser. No. 281,873
Int. Cl.[6] H04J *3/16*
U.S. Cl. 370—341 **8 Claims**

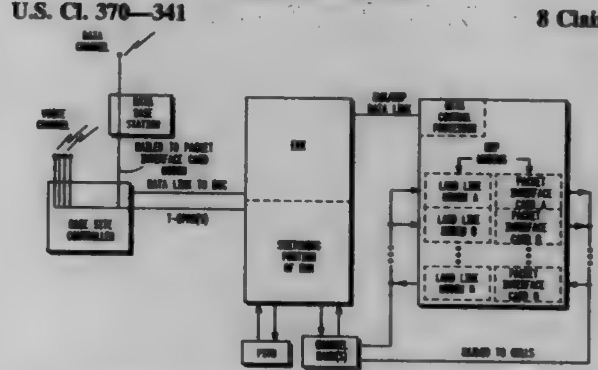

1. A method of providing data services in a cellular network comprising:

establishing a call between a subscriber unit and a base station over a voice cellular network using a voice transmission protocol;

handing off the call from the voice cellular network to an interconnected wireless data network for transmission of user data traffic upon receiving a data designation from one of the subscriber and the base station;

sending and receiving user data traffic between the subscriber and the interconnected wireless data network; and

handing off the call back to the voice cellular network upon the completion of the sending and receiving of user data traffic by the wireless data network.

5,701,298
AUTOMATIC RETRANSMISSION REQUEST

John Walter Diachina, Garner, N.C., and Håkan Clas Andersson, Ekerö, Sweden, assignors to Telefonaktiebolaget LM Ericsson, Stockholm, Sweden

Division of Ser. No. 332,114, Oct. 31, 1994, Pat. No. 5,633,874, which is a continuation-in-part of Ser. No. 147,254, Nov. 1, 1993, Pat. No. 5,603,081. This application Jun. 7, 1995, Ser. No. 477,545
Int. Cl.[6] H04J *3/16*
U.S. Cl. 370—346 **8 Claims**

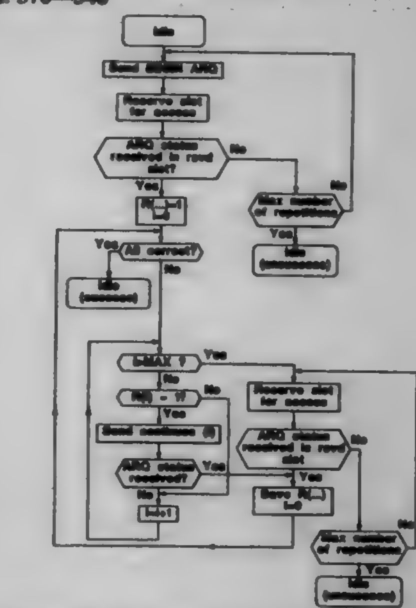

1. A method for determining the status of Automatic Transmission Request (ARQ) Mode BEGIN and CONTINUE frames sent to a remote station, comprising the steps of:

receiving, at the remote station, an Automatic Retransmission Request (ARQ) Mode BEGIN frame with a remote station identity associated with said remote station and storing partial echo and transaction identifier values contained in the Automatic Retransmission Request Mode BEGIN frame; and

receiving, at said remote station, at least one subsequent Automatic Retransmission Request Mode CONTINUE frame having partial echo and transaction identifier values that match the stored partial echo and transaction identifier values.

5,701,299
METHOD OF AND APPARATUS FOR SWITCHING MULTI-SLOT TIME DIVISION SIGNALS

Akira Umezu, Tokyo, Japan, assignor to NEC Corporation, Tokyo, Japan

Filed Jan. 18, 1996, Ser. No. 588,315
Claims priority, application Japan, Jan. 25, 1995, 7-9841
Int. Cl.[6] H04Q *11/04*
U.S. Cl. 370—376 **4 Claims**

3. An apparatus for switching a multi-slot time division signal, comprising:

a pattern matching detector for generating write pulses when effective data are carried in time slots of a multi-slot time division input signal by detecting idle channel bit patterns of data in time slots of said multi-slot time division input signal wherein effective data are not carried;

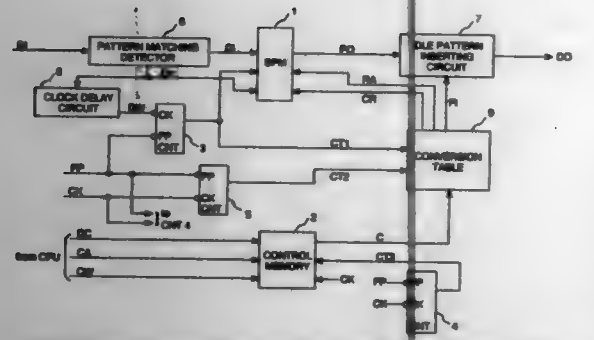

a clock delay circuit for delaying said write pulses for one period of a clock which is synchronized with time slots of said multi-slot time division input signal;
a write address counter for counting output of said clock delay circuit;
a memory for storing data in each of effective time slots of said multi-slot time division input signal at an address generated by said write address counter;
switching control means for indicating a slot number of said multi-slot time division input signal carrying data to be switched into each of time slots of a multi-slot time division output signal;
a conversion table for converting said slot number of said multi-slot time division input signal indicated by said switching control means into an address of said memory storing data carried in said slot number of said multi-slot time division input signal and generating an idle pattern inserting pulse when data carried in said slot number of said multi-slot time division input signal indicated by said switching control means are not stored in said memory; and
output means for recomposing said multi-slot time division output signal by reading out data stored at said address of said memory converted by said conversion table and adding a bit pattern same with said idle channel bit patterns when said idle pattern inserting pulse is delivered from said conversion table.

5,701,300

CONNECTIONLESS SERVER FOR AN ASYNCHRONOUS TRANSFER MODE NETWORK

Byung Chun Jeon; Mi Sun Do; Chun Kwan Park; Chang Whan Oh, and Young Sun Kim, all of Daejeon, Rep. of Korea, assignors to Electronics and Telecommunications Research Institute, Daejeon, and Korea Telecommunication Authority, Seoul, both of Rep. of Korea

Filed Dec. 22, 1995, Ser. No. 577,346

Claims priority, application Rep. of Korea, Dec. 22, 1994, 1994-36106

Int. Cl.⁶ H04L *12/56*

U.S. Cl. 370—392 **11 Claims**

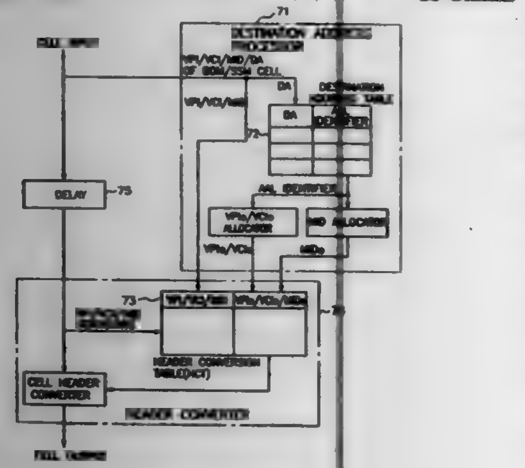

1. A connectionless server comprising:
cell header processing means for receiving cells having headers with header values, for delivering a destination address and an HCT (Header Conversion Table) write address to write header conversion information generated from the destination address whenever a BOM (Beginning Of Message) or SSM (Single Segment Message) cell is received, and for delivering a received cell and an HCT read address at which header conversion information for the received cell is stored whenever any cell, including a BOM or SSM cell, is received;
destination address processing means for searching the header conversion information (VPIo/VCIo/MIDo) using a destination address value delivered from said cell header processing means; and
header conversion processing means for storing header conversion information delivered from said destination address processing means and converting the header value of said received cell by corresponding header conversion information stored in a header conversion table.

5,701,301

MEDIATION OF OPEN ADVANCED INTELLIGENT NETWORK IN SS7 PROTOCOL OPEN ACCESS ENVIRONMENT

Frank J. Weisser, Jr., Atlanta, Ga., assignor to BellSouth Corporation, Atlanta, Ga.

Continuation-in-part of Ser. No. 83,984, Jun. 28, 1993, abandoned, and a continuation of Ser. No. 246,876, May 20, 1994, Pat. No. 5,430,719. This application Jun. 6, 1994, Ser. No. 254,590

Int. Cl.⁶ H04L *12/56*

U.S. Cl. 370—428 **46 Claims**

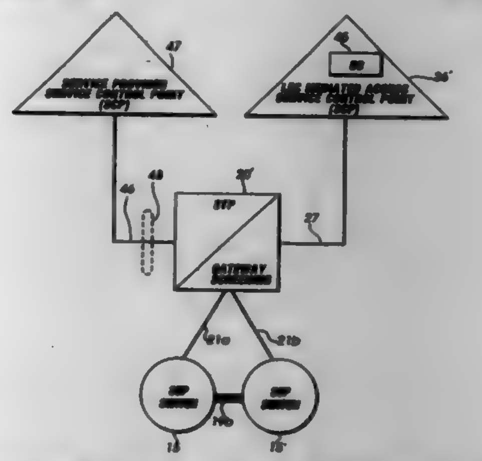

1. A method for preventing unauthorized transmission of data packet messages between a service provider service control point (SP-SCP) and an intelligent switched telephone network, said network including a plurality of digital data communications channels among a plurality of intelligent switched network elements including at least one signal transfer point (STP) and at least one mediated access service control point (MA-SCP), said MA-SCP being connected to said STP, comprising the steps of:
receiving a message in said STP;
transmitting said message from said STP to said MA-SCP; and
mediating said message in said MA-SCP, wherein said MA-SCP includes at least one database containing customer records, wherein said message comprises a first transaction number, and wherein said step of mediating said message in said MA-SCP comprises:
storing a transaction identifier for said message in said database;
generating a second transaction number for said message;
associating said second transaction number with said first transaction identifier in said database;

removing said first transaction number from said message; and
adding said second transaction number to said message.

5,701,302

METHOD AND APPARATUS FOR ADAPTIVELY COMPANDING DATA PACKETS IN A DATA COMMUNICATION SYSTEM

Robert L. Geiger, Algonquin, Ill., assignor to Motorola, Inc,, Schaumburg, Ill.

Filed Oct. 25, 1995, Ser. No. 547,747

Int. Cl.⁶ G05B *19/04*

U.S. Cl. 370—521 **30 Claims**

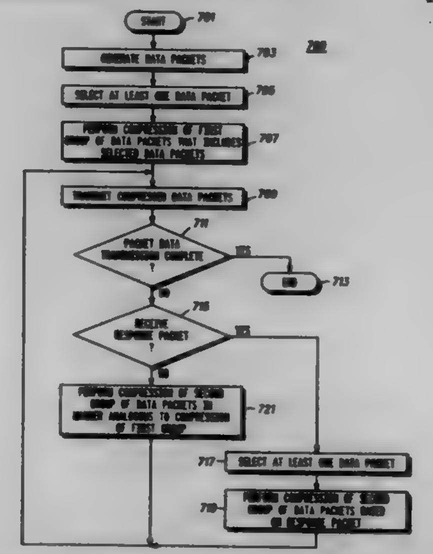

1. A method for adaptively compressing data packets for transmission between a first communication device and a second communication device, the method comprising the steps of:
a) generating, by the first communication device, a plurality of data packets;
b) selecting, by the first communication device, at least one of the plurality of data packets to produce at least one selected data packet, wherein a quantity of the at least one selected data packet is less than the plurality of data packets;
c) performing, by the first communication device, a first compression of each data packet in a first group of the plurality of data packets that includes the at least one selected data packet to produce compressed data packets;
d) transmitting, by the first communication device, the compressed data packets to the second communication device;
e) receiving, by the second communication device, the compressed data packets to produce received compressed data packets;
f) determining, by the second communication device, whether the received compressed data packets include the at least one selected data packet;
g) when the received compressed data packets include the at least one selected data packet, transmitting, by the second communication device, a response packet to the first communication device, the response packet indicating which selected data packets of the at least one selected data packet were received by the second communication device; and
h) upon receipt of the response packet, performing, by the first communication device, a second compression of each data packet in a second group of the plurality of data packets based on the response packet to produce adaptively compressed data packets.

5,701,303

ASYNCHRONOUS TIME-DIVISION MULTIPLEX PACKET TRANSMISSION LINK CONTROL INFORMATION TRANSMISSION METHOD

Paul Vinel, Velizy, France, assignor to Alcatel Cit, Paris, France

Filed Nov. 14, 1991, Ser. No. 791,305

Claims priority, application France, Nov. 15, 1990, 90 14212

Int. Cl.⁶ H04J *3/12*

U.S. Cl. 370—522 **6 Claims**

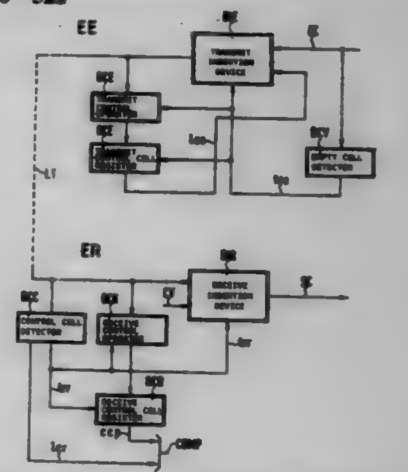

1. A method of transmitting control information over an asynchronous time-division multiplex cell transmission link between a transmitting end and a receiving end, said method comprising the steps of:
receiving at said transmit end a first sequence of asynchronous time-division multiplex cells, each containing an indication of a destination of the cell, to be transmitted over said link from said transmitting end to said receiving end, said first sequence of cells including both data cells and empty cells, said empty cells having substantially the same format as said data cells:
preparing at least a first control cell containing control information generated in accordance with a plurality of the data cells of the first sequence;
detecting said empty cells in said first sequence of cells;
replacing a detected empty cell with said first control cell in said first sequence of cells to form a second sequence of cells including said first control cell and said plurality of data cells;
transmitting said second sequence of cells from said transmitting end to said receiving end;
detecting said first control cell in the second sequence of cells received at said receiving end; and
replacing the detected first control cell with an empty cell to the extent required at said receiving end, to reconstitute said first sequence of cells.

5,701,304

METHOD FOR CORRECTING UNRECOVERABLE SECTORS USING TRACK LEVEL REDUNDANCY IN A DISC DRIVE STORAGE SYSTEM

Neal Glover, Broomfield; Christopher P. Zook, Longmont; John Schadegg, Niwot, and William L. Witt, Broomfield, all of Colo., assignors to Cirrus Logic, Inc., Fremont, Calif.

Filed Sep. 16, 1996, Ser. No. 714,749

Int. Cl.⁶ G06F *11/00*

U.S. Cl. 371—10.2 **26 Claims**

1. In a disc storage device, wherein the disc comprises a plurality of tracks thereon, and each track comprises a plurality of data sectors and at least one redundancy sector, a method for processing the data sectors comprising the steps of:
(a) receiving user data from a host system connected to the disc storage device, the user data to be written to a target data sector;
(b) seeking to a target track containing the target data sector;

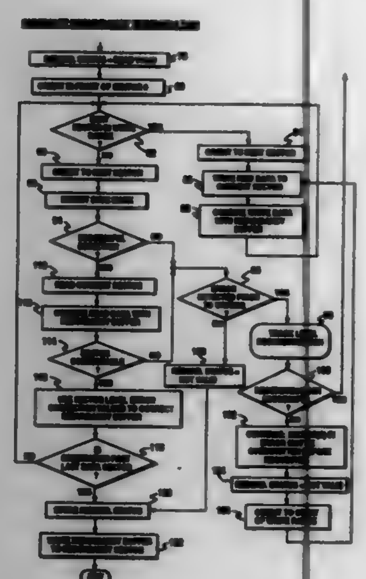

(c) reading at least two data sectors in the target track other than the target data sector;
(d) generating track level redundancy data in response to the data sectors read in step (c) and the user data received in step (a);
(e) writing the user data received in step (a) to the target data sector; and
(f) writing the track level redundancy data to the redundancy sector.

5,701,305
ERROR RECOVERY IN A NETWORK HAVING CASCADED HUBS
Alan R. Albrecht, Granite Bay, Calif., assignor to Hewlett-Packard Company, Palo Alto, Calif.
Continuation-in-part of Ser. No. 237,746, May 4, 1994. This application Mar. 3, 1995, Ser. No. 397,827
Int. Cl.⁶ G01R *31/28;* **G06F** *11/00*
U.S. Cl. 371—20.1 **20 Claims**

8. In a network system in which end nodes are connected to a plurality of cascaded hubs, a method by which a first hub handles a timeout on a first port of the first hub, the method comprising the steps of:
(a) starting a first timer upon the first hub acknowledging a grant to a first device connected to the first port;
(b) upon expiration of the first timer without the first hub beginning to receive a first network packet over the first port, beginning to send by, the first hub, a first error packet to a second device connected to the first hub; and,
(c) upon the first hub beginning to receive a second error packet over the first port after expiration of the first timer and before the first hub has completed sending the first error packet, appending the second error packet to the first error packet.

5,701,306
SEMICONDUCTOR INTEGRATED CIRCUIT WHICH CAN BE TESTED BY AN LSI TESTER HAVING A REDUCED NUMBER OF PINS
Tomohisa Arai, Tokyo, Japan, assignor to NEC Corporation, Tokyo, Japan
Filed Aug. 28, 1995, Ser. No. 519,934
Claims priority, application Japan, Aug. 26, 1994, 6-224027
Int. Cl.⁶ G01R *31/28*
U.S. Cl. 371—22.1 **6 Claims**

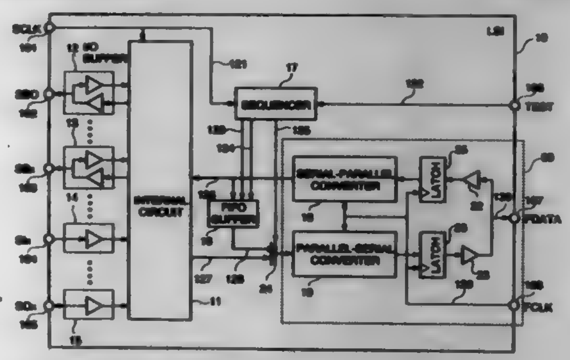

1. A semiconductor integrated circuit comprising:
an internal circuit;
input means for receiving data from an external apparatus, and for outputting the received data to said internal circuit;
output means for receiving a result of processing from said internal circuit, and for outputting the result of processing to the external apparatus; and
loopback control means for receiving a test control signal indicating a test mode, and for looping back an output of said input means to said output means in said test mode without passing said output of said input means through said internal circuit, said loopback control means including:
storing means for storing said output of said input means;
a selector for receiving said result of processing from said internal circuit and an output of said storing means, and for outputting one of said result of processing and said output of said storing means selected in accordance with a selection signal; and
sequence control means for responding to said test control signal, for generating said selection signal to said selector, and for controlling writing and reading of said storing means in said test mode.

5,701,307
LOW OVERHEAD INPUT AND OUTPUT BOUNDARY SCAN CELLS
Lee D. Whetsel, Plano, Tex., assignor to Texas Instruments Incorporated, Dallas, Tex.
Continuation of Ser. No. 357,476, Dec. 16, 1994, abandoned. This application Sep. 9, 1996, Ser. No. 711,137
Int. Cl.⁶ G01R *31/28*
U.S. Cl. 371—22.3 **20 Claims**

1. An electrical circuit, comprising:
functional circuitry for performing normal operating functions of the electrical circuit;

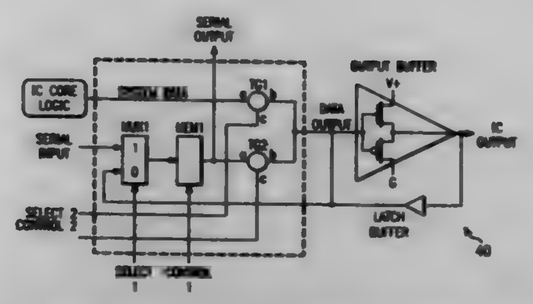

an output buffer coupled to said functional circuitry for receiving output signals from said functional circuitry and driving said output signals out of the electrical circuit to an external destination;
a test data path for providing test data;
memory circuitry coupled to said test data path for storing test data received from sad test data path; and
a latching circuit connected to said memory circuitry for receiving and selectively latching test data stored in said memory circuitry, said latching circuit including said output buffer and a feedback path connected in parallel with said output buffer.

5,701,308
FAST BIST ARCHITECTURE WITH FLEXIBLE STANDARD INTERFACE
Brett W. Attaway; John D. Lofgren, both of Orlando, and H. Ray Kelley, Oviedo, all of Fla., assignors to Lockheed Martin Corporation, Bethesda, Md.
Filed Oct. 29, 1996, Ser. No. 739,426
Int. Cl.⁶ G06F *11/00*
U.S. Cl. 371—22.3 **22 Claims**

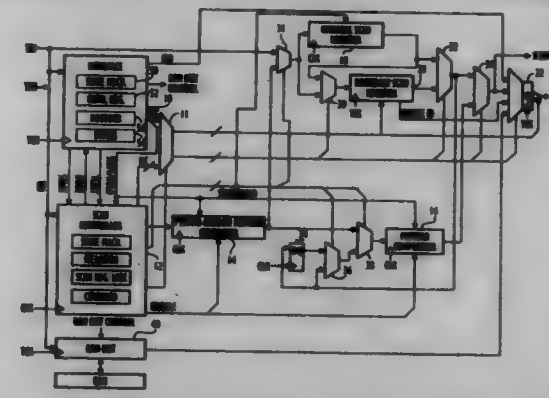

1. A circuit for testing one or more integrated circuits, each integrated circuit having main logic circuitry operating according to a system clock signal supplied from an external source, the circuit comprising:
a source of input test data;
one or more scan registers for receiving the input test data according to a test clock signal, supplying the input test data to the main logic circuitry, receiving output test data generated by the main logic circuitry in response to the input test data, and shifting the output test data according to the test clock signal;
a test data signature element for receiving the output test data and forming a test data signature from the output test data; and
a clock multiplexer, located external to the one or more integrated circuits, for selectively replacing the system clock signal from the external source with the test clock signal such that the scan registers receive the input test data, and shift the output test data while the system clock signal is replaced.

5,701,309
AUTOMATED TEST EQUIPMENT DIGITAL TESTER EXPANSION APPARATUS
Kevin J. Gearhardt, Fort Collins, and Darrell L. Pruchner, Bellvue, both of Colo., assignors to AT&T Global Information Solutions Company, Dayton, Ohio; Hyundai Electronics America, San Jose, Calif., and Symbios Logic Inc., Fort Collins, Colo.
Filed Dec. 2, 1992, Ser. No. 984,645
Int. Cl.⁶ G01R *31/28*
U.S. Cl. 371—25.1 **22 Claims**

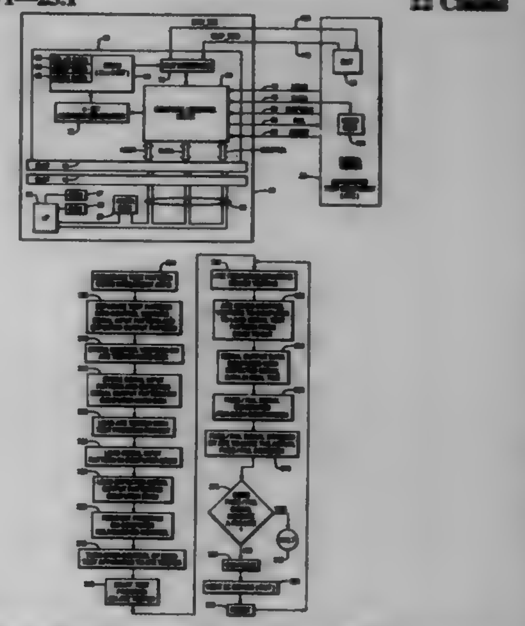

1. A scan-based logic test apparatus for use with an automated test equipment (ATE) digital tester which tests scan-based logic IC devices, said test apparatus being pluggable into a bus slot within a computer including a first permanent memory, said test apparatus comprising:
coupling means for coupling said apparatus to said computer to permit access to scan-based pattern data stored in the first permanent memory of said computer, said scan-based pattern data including serial input pattern data and expected serial output pattern data;
I/O interface control means, coupled to said coupling means, for interfacing said apparatus to said computer to permit retrieval of said scan-based pattern data from said first permanent memory and for interfacing said apparatus to said digital tester to permit said tester to supply control signals to said apparatus;
an SRAM memory, coupled to said I/O interface control means, for storing said scan-based pattern data including serial input pattern data and expected serial output pattern data from said first permanent memory upon retrieval thereof by said I/O interface control means, and
an IC device interface means for coupling said IC device to said SRAM memory and said I/O interface control means, such that said serial input pattern data is provided to said IC device and actual serial output pattern data is collected from said IC device for comparison with said expected serial output pattern data to make a pass/fail decision with respect to said IC device.

5,701,310
DATA DETECTION APPARATUS
Hironori Deguchi, Kadoma, and Toshiyuki Shimada, Kobe, both of Japan, assignors to Matsushita Electric Industrial Co., Ltd., Kadoma, Japan
Filed Feb. 20, 1996, Ser. No. 602,490
Claims priority, application Japan, Feb. 21, 1995, 7-032131
Int. Cl.[6] G11B *20/18*
U.S. Cl. 371—30 **8 Claims**

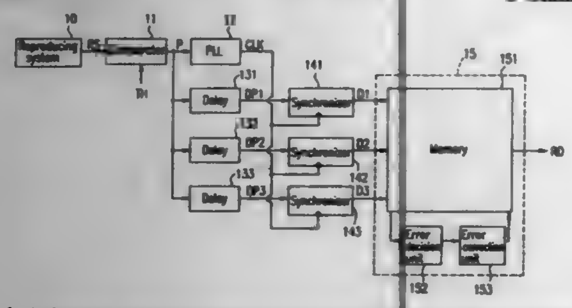

1. A data detection apparatus for retrieved binary data modulated in conformity with the (d, k) constraint from an analog signal, comprising:
a timing extracting unit for generating a timing signal representing the timing at which the analog signal crosses the threshold value;
a clock generating unit for generating a clock signal having a cycle corresponding to one bit of the binary data from the timing signal;
a timing position detecting unit for detecting a position in the cycle of the timing signal; and
an error correcting unit for correcting an error in the binary data in accordance with the detected position.

5,701,311
REDUNDANT ACKNOWLEDGEMENTS FOR PACKETIZED DATA IN NOISY LINKS AND METHOD THEREOF
Vijay Kapoor, Phoenix, Ariz., assignor to Motorola, Inc., Schaumburg, Ill.
Filed Feb. 8, 1996, Ser. No. 598,783
Int. Cl.[6] H04L *1/16*
U.S. Cl. 371—32 **20 Claims**

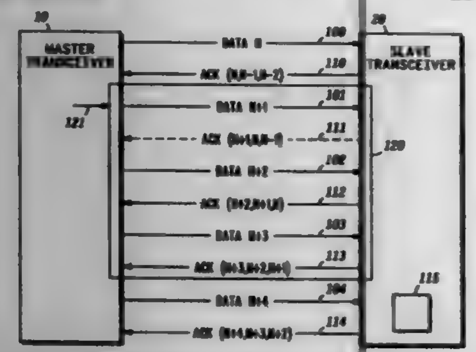

1. In a communication system, a method for reducing retransmissions of data packets between a slave tranceiver and a master transceiver, said method comprising the steps of:
when an outstanding packet window is not exceeded, firstly transmitting at least one data packet from said master transceiver, said outstanding packet window being a pre-negotiated quantity of outstanding ones of said data packets; and
when said slave transceiver receives said at least one data packet intact, secondly transmitting an acknowledgment for confirming a successful arrival of said at least one data packet and previous ones of said at least one data packet, said acknowledgment corresponding to said outstanding packet window.

5,701,312
METHOD AND APPARATUS FOR SELECTIVELY PROVIDING REPEAT MESSAGES IN A RADIO COMMUNICATION SYSTEM
Michael J. DeLuca, Boca Raton, and James G. Mittel, Lake Worth, both of Fla., assignors to Motorola, Inc., Schaumburg, Ill.
Filed Apr. 1, 1996, Ser. No. 627,720
Int. Cl.[6] H04L *1/08*
U.S. Cl. 371—32 **26 Claims**

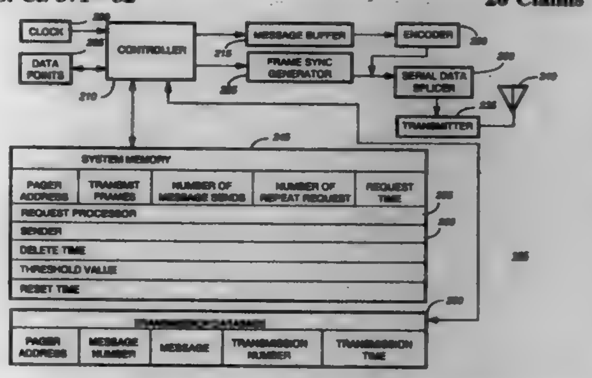

1. A communication system for selectively providing repeat messages, the communication system comprising:
a message transmission device for transmitting messages a single time, for receiving repeat requests indicating that a previously transmitted message should be transmitted again, and for automatically transmitting future messages more than once in response to determining that a transmission threshold has been exceeded; and
a radio communication device for receiving the messages and for generating a repeat request in response to determining that the previously transmitted message has not been correctly received.

5,701,313
METHOD AND APPARATUS FOR REMOVING SOFT ERRORS FROM A MEMORY
David M. Purdham, Brooklyn Park, Minn., assignor to Unisys Corporation, Blue Bell, Pa.
Filed Feb. 24, 1995, Ser. No. 394,383
Int. Cl.[6] G06F *11/10*
U.S. Cl. 371—40.2 **52 Claims**

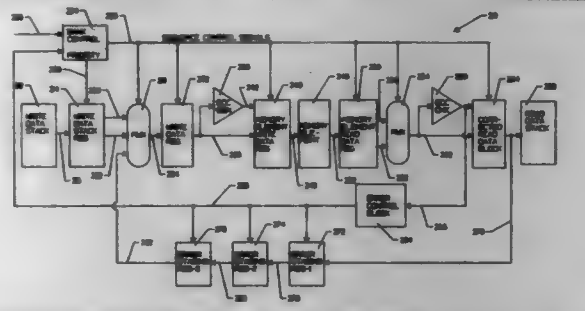

35. A memory module for storing a plurality of memory words, the memory module being compatible with a system having a priority scheme, said memory module comprising:
a. a memory element for storing the plurality of memory words;
b. a writing circuit coupled to said memory element for writing predetermined ones of the plurality of memory words into the memory element during normal memory operation;
c. a reading circuit coupled to said memory element for reading predetermined ones of the plurality of memory words from said memory element;

d. a detecting circuit coupled to said reading circuit for detecting which of said predetermined ones of the plurality of memory words read from said memory element have an error therein;
e. a correcting circuit coupled to said detecting circuit and to said reading circuit for correcting said errors detected by said detecting circuit as the predetermined ones of the plurality of memory words are read from said memory element, thereby providing one or more corrected memory words;
f. a staging circuit coupled to said correcting circuit for staging said one or more corrected memory words; and
g. a providing circuit coupled to said staging circuit and to said writing circuit for providing said one or more corrected memory words from said staging circuit to said writing circuit wherein said writing circuit writes said one or more corrected memory words into the memory element.

5,701,314
ON-THE-FLY ERROR CORRECTION USING THERMAL ASPERITY ERASURE POINTERS FROM A SAMPLED AMPLITUDE READ CHANNEL IN A MAGNETIC DISK DRIVE
Alan J. Armstrong, Broomfield, and Christopher P. Zook, Longmont, both of Colo., assignors to Cirrus Logic, Inc., Fremont, Calif.
Filed Dec. 21, 1995, Ser. No. 576,742
Int. Cl.[6] G11B *20/18*
U.S. Cl. 371—40.3 **14 Claims**

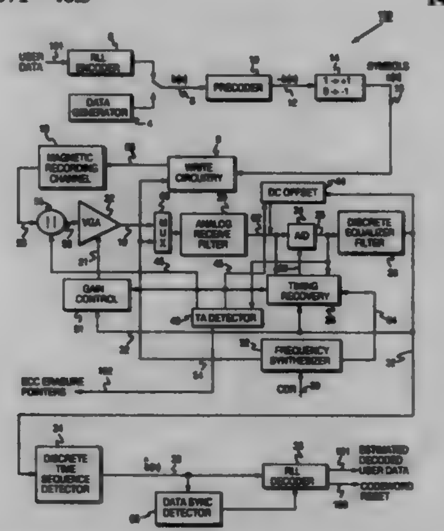

2. In a disk drive storage system comprising a read head position over a magnetic disk for generating an analog read signal by detecting magnetic transitions on the magnetic disk, a thermal asperity (TA) compensator comprising:
(a) a data detector for detecting an estimated digital sequence from the analog read signal;
(b) a TA detector for detecting the occurrence of a thermal asperity in the analog read signal and generating erasure pointers corresponding to a location in the estimated digital sequence where a thermal asperity occurred; and
(c) an error detection and correction (EDAC) system, responsive to the erasure pointers, for correcting errors in the estimated digital sequence caused by the thermal asperity.

5,701,315
METHOD AND DEVICE FOR PROTECTING THE EXECUTION OF LINEAR SEQUENCES OF COMMANDS PERFORMED BY A PROCESSOR
Christian Pitot, Boulogne, and Martinez Michel, Martignas sur Jalle, both of France, assignors to Sextant Avionique, Meudon la Foret, France
Filed Jul. 19, 1995, Ser. No. 504,113
Claims priority, application France, Jul. 27, 1994, 94 09284
Int. Cl.[6] G11C *29/00*
U.S. Cl. 371—51.1 **5 Claims**

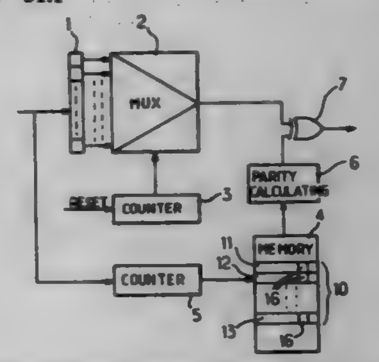

4. A device for detecting errors during execution by a processor of a linear sequence of binary coded commands stored in an addressable memory from a predetermined binary start address comprising a predetermined number n of bits each having a rank in said start address, said sequence comprising a series of binary command words each having a predetermined rank in said sequence corresponding to a predetermined address in said memory, each of said command words comprising a predetermined number of bits including at least one unused bit at a predetermined rank in said command word, said unused bit of each command word having a value such that a parity of said command word is equal to a value of a bit of said start address having a rank equal to a result of a modulo-n function applied to the rank of said word in said sequence, said device comprising:
a register containing said start address and coupled with a multiplexer controlled by a first counter zeroized every time said counter reaches said number n, said multiplexer enabling a bit of said start address contained in said register to be selected as a function of the value of said first counter,
a second counter having a value initialized at a value of the start address, which determines the address of the word to be read in said memory, said first and second counters being simultaneously incremented so that the first counter contains the rank of the start address bit associated to the command word addressed by said second counter,
a parity calculating circuit coupled with said memory for calculating a parity of the command word in said sequence, which has an address corresponding to the value of said second counter,
an XOR gate receiving as input a first signal from said parity calculating circuit and a second signal from said multiplexer, and supplying a read error signal if respective logic levels of said first and second signals are different.

5,701,316
METHOD FOR GENERATING AN INTERNET PROTOCOL SUITE CHECKSUM IN A SINGLE MACRO INSTRUCTION
Merwin H. Alferness, New Brighton; Peter Bradley Criswell, Bethel; David Randal Johnson, Oakdale, and James R. McBreen, Shoreview, all of Minn., assignors to Unisys Corporation, Blue Bell, Pa.
Filed Aug. 31, 1995, Ser. No. 521,695
Int. Cl.[6] G06F *11/10*
U.S. Cl. 371—53 **21 Claims**

1. In a computer system for sending packets of message data to and receiving packets of message data from at least one commu-

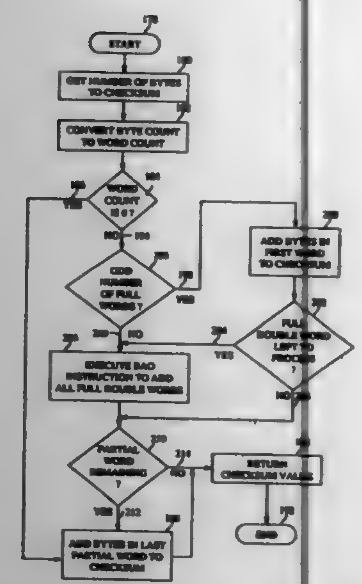

nications network utilizing a Transmission Control Protocol/Internet Protocol (TCP/IP), the computer system having a memory to store the packets of message data, a method of generating an Internet Protocol Suite checksum containing a first predetermined number of binary digits comprising the steps of:

(a) fetching a checksum generation macroinstruction from the memory;

(b) decoding said checksum generation macroinstruction to determine where a selected one of the packets of message data resides in the memory:

(c) fetching the size of said selected one of the packets of message data; and

(d) executing said checksum generation macroinstruction to generate the Internet Protocol Suite checksum for said selected one of the packets of message data, including the steps of:

(d1) fetching from a selected register contents for use as a first operand;

(d2) calculating an address in the memory wherein said selected one of the packets of message data resides;

(d3) fetching a second predetermined number of binary digits of said selected one of the packets of message data as a second operand, wherein said second predetermined number of binary digits is greater than the first predetermined number of binary digits;

(d4) adding said second operand to said first operand to form a checksum and storing said checksum as said first operand;

(d5) repeating steps (d3) through (d4) for each said second predetermined number of binary digits included within said selected one of the packets of message data to be checksummed as determined by said size of said selected one of the packets of message data: and

(d6) storing said checksum into said selected register.

5,701,317
DEVICE FOR TRAPPING LASER PULSES IN AN OPTICAL DELAY LINE

David U. L. Yu, Rancho Palos Verdes, and Donald L. Bullock, Los Angeles, both of Calif., assignors to Daly Research Inc., Rancho Palos Verdes, Calif.

Filed May 30, 1995, Ser. No. 45[illegible],362
Int. Cl.^{6} H01S *3/30;3/083;3/08;* **G2[illegible]G** *4/00*

U.S. Cl. 372—5 **30 Claims**

1. An optical member having a centerline for trapping laser pulses comprising:
a first mirror;
a second mirror separated from said first mirror by a predetermined distance;

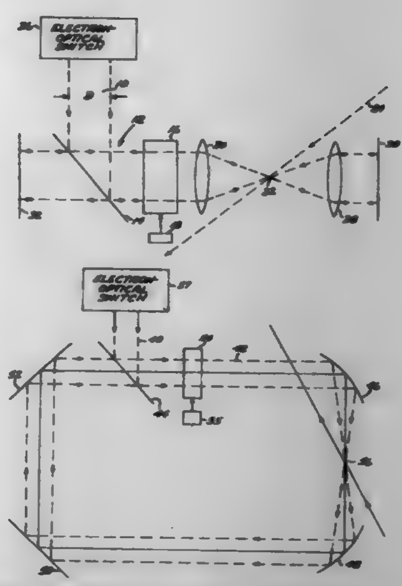

a polarization sensitive beam splitter positioned at an angle with the centerline adjacent said first mirror;
a Pockels cell positioned within said optical member between said first mirror and said polarization sensitive beam splitter, said Pockels cell being periodically activated;
means for introducing a collimated laser pulse within said optical member and incident upon a first surface of said polarization sensitive beam splitter; and
means for introducing an electron beam into said optical cavity in a manner such that it passes through the focal point between said first and second mirrors, the laser pulse interacting with the electron beam adjacent to the area of said focal point to produce a reaction product or to diagnose the electron beam.

5,701,318
POLARIZED SUPERFLUORESCENT FIBER SOURCES

Michel J. F. Digonnet, Palo Alto; Dario G. Falquier, Menlo Park, both of Calif.; Jefferson L. Wagener, New Providence, N.J., and H. John Shaw, Stanford, Calif., assignors to The Board of Trustees of the Leland Stanford Junior University, Stanford, Calif.

Filed May 10, 1996, Ser. No. 645,965
Int. Cl.^{6} H01S *3/38*

U.S. Cl. 372—6 **27 Claims**

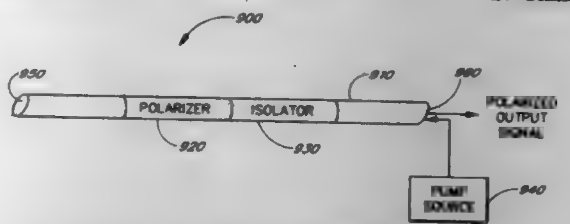

1. A superfluorescent light source comprising:
an optically propagating waveguide having a first end and a second end;
a pump source which provides a pump signal having a first wavelength at said first end of said waveguide to stimulate emission of light within said waveguide at a second wavelength different than said first wavelength; and
a polarizer placed at a position along said waveguide so as to substantially increase the emission of light in a preferred polarization from one of said first and second ends of said waveguide.

5,701,319
METHOD AND APPARATUS FOR GENERATING ULTRASHORT PULSES WITH ADJUSTABLE REPETITION RATES FROM PASSIVELY MODELOCKED FIBER LASERS

Martin E. Fermann, Ann Arbor, Mich., assignor to Imra America, Inc., Ann Arbor, Mich.

Filed Oct. 20, 1995, Ser. No. 546,062
Int. Cl.^{6} H01S *3/098*

U.S. Cl. 372—18 **42 Claims**

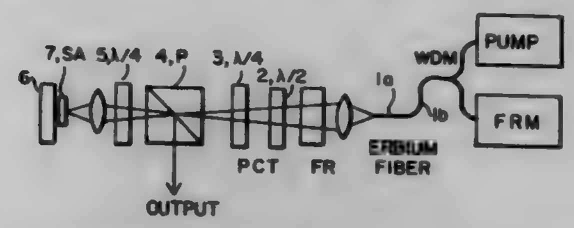

1. A passively modelocked laser comprising:
means for optical pumping of the modelocked laser;
an optical cavity for adjusting the energy of said laser;
means for initiating and sustaining the production of short optical pulses in said cavity;
an optical fiber gain medium for transmitting said optical pulses, said optical pulses having a repetition rate of integer multiples of the fundamental cavity frequency;
means for outputting laser energy from said cavity;
means for maximizing the separation of said pulses inside the cavity, including at least one semiconductor saturable absorber with a carrier life time shorter than the fundamental cavity round-trip time and longer than one hundredth of the cavity round-trip time; and
means for providing optical limiting in the cavity to minimize pulse amplitude fluctuations.

5,701,320
APPARATUS AND METHOD OF STABILIZING OSCILLATION FREQUENCY FOR SINGLE AXIAL MODE FREQUENCY TUNABLE LASER OSCILLATOR AND APPARATUS AND METHOD OF FREQUENCY SWEEPABLE LASER OSCILLATION

Akira Sugiyama, Ibaraki-ken; Tsuyoshi Nakayama, Kanagawa-ken; Masaaki Kato, Ibaraki-ken; Yoichiro Maruyama, Ibaraki-ken, and Takashi Arisawa, Ibaraki-ken, all of Japan, assignors to Japan Atomic Energy Research Institute, Tokyo, Japan

Filed Apr. 26, 1996, Ser. No. 638,544
Claims priority, application Japan, Jun. 30, 1995, 7-165954
Int. Cl.^{6} H01S *3/13*

U.S. Cl. 372—32 **6 Claims**

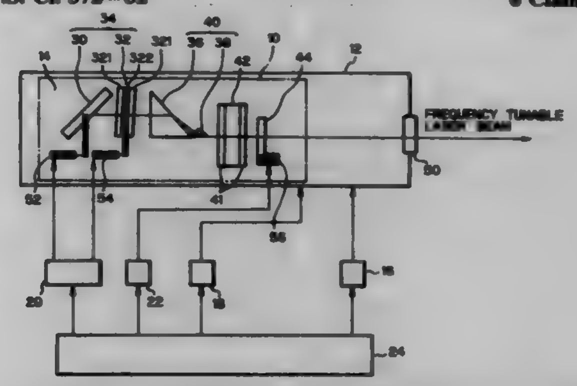

1. An apparatus for stabilizing an oscillation frequency provided by a frequency tunable laser oscillator which oscillates in a single axial mode and is disposed in the interior of an enclosed container containing a specified gas therein, said apparatus comprising:
means for measuring the pressure and the temperature of said gas;
means for calculating the pressure to be compensated for making the index of refraction of said gas constant, on the basis of the pressure and temperatures of said gas which have been measured by said measuring means at different times; and
means for varying the pressure of said gas in accordance with the compensation value of the pressure which has been calculated by said calculating means.

4. A method of stabilizing an oscillation frequency provided by a frequency tunable laser oscillator which oscillates in a single axial mode and is disposed in the interior of an enclosed container containing a specified gas therein, said method comprising the steps of:
measuring the pressure and the temperature of said gas;
calculating the pressure to be compensated for making the index of refraction of said gas constant, on the basis of the pressures and temperatures of said gas which have been measured at different times; and
varying the pressure of said gas in accordance with the compensation value of the pressure which has been calculated.

5,701,321
SEMICONDUCTOR LASER PRODUCING SHORT WAVELENGTH LIGHT

Norio Hayafuji, and Zempei Kawazu, both of Itami, Japan, assignors to Mitsubishi Denki Kabushiki Kaisha, Tokyo, Japan

Filed Mar. 28, 1996, Ser. No. 623,378
Claims priority, application Japan, Apr. 28, 1995, 7-105763
Int. Cl.^{6} H01S *3/19;3/08*

U.S. Cl. 372—44 **13 Claims**

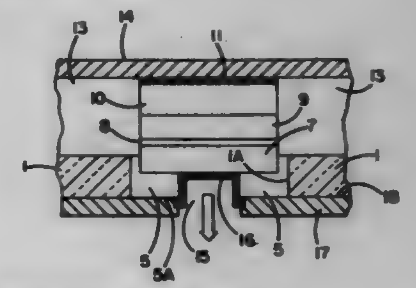

1. A semiconductor laser comprising:
an electrically insulating substrate having an opening;
a first conductivity type semiconductor first contact layer disposed within the opening in the electrically insulating substrate, contacting the electrically insulating substrate, and having an externally exposed surface;
a laminated semiconductor layer structure disposed on the first contact layer and comprising, successively disposed, a first conductivity type semiconductor first cladding layer, a semiconductor active layer, a second conductivity type semiconductor second cladding layer, and a second conductivity type semiconductor second contact layer wherein the first contact layer includes an aperture within the opening in the electrically insulating substrate in which a surface of the first cladding layer is exposed;
a first light reflecting layer disposed on the surface of the first cladding layer exposed in the aperture;
a second light reflecting layer disposed on the second contact layer opposite the first light reflecting layer;
a first electrode disposed on the electrically insulating substrate and extending to and contacting the first contact layer; and
a second electrode in electrical contact with the second contact layer.

5,701,322
SEMICONDUCTOR LASER FOR PUMPING LIGHT AMPLIFIER

Yutaka Nagai, Tokyo, Japan, assignor to Mitsubishi Denki Kabushiki Kaisha, Tokyo, Japan

Filed Dec. 19, 1995, Ser. No. 575,121

Claims priority, application Japan, Jul. 14, 1995, 7-178759

Int. Cl.[6] H01S *3/19*

U.S. Cl. 372—46 **14 Claims**

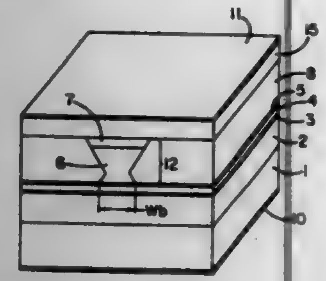

1. A semiconductor laser comprising:
a first conductivity type semiconductor substrate;
a first conductivity type cladding layer disposed on the semiconductor substrate;
an active layer disposed on the first conductivity type cladding layer for producing light having a wavelength λ;
a light waveguide structure comprising a second conductivity type cladding layer disposed on part of the active layer;
a first conductivity type current blocking layer disposed on parts of the active layer, on opposite sides of, contacting, and confining the light waveguide structure and containing an element absorbing light having the wavelength λ;
a second conductivity type contacting layer contacting the light waveguide structure and the current blocking layer; and
first and second electrodes respectively disposed on the substrate and the contacting layer.

5,701,323
DYE LASERS AND ORGANIC INCLUSIONS FOR SAME

Bart Kahr, Lafayette; Sei-Hum Jang, and Daniel S. Elliott, both of West Lafayette, all of Ind., assignors to Purdue Research Foundation, West Lafayette, Ind.

Filed Jun. 12, 1996, Ser. No. 661,978

Int. Cl.[6] H01S *3/20*

U.S. Cl. 372—54 **25 Claims**

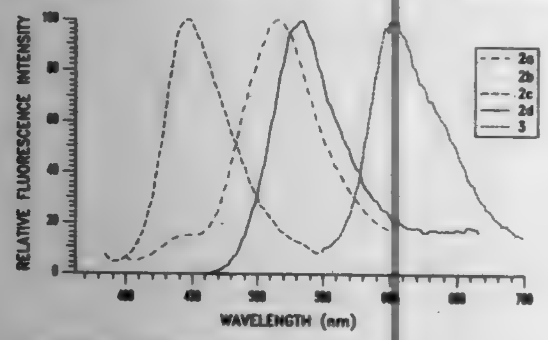

1. A dye laser, comprising:
a lasing crystal;
said lasing crystal being contained in a resonant cavity delimited by energy extracting means;
a pumping energy source operably coupled with the lasing crystal and operable to produce stimulated emission of the lasing crystal; and
said lasing crystal comprising a crystalline lattice incorporating lasable dye molecules oriented in single crystal register in the crystalline lattice, whereby said stimulated emission is polarized.

5,701,324
OPTICAL, OPTO-ELECTRONIC OR PHOTONIC COMPONENT INCLUDING AT LEAST ONE LATERALLY CONFINED OPTICAL CAVITY

Izo Abram, Saint-Cloud, France, assignor to France Telecom, France

Filed Aug. 21, 1995, Ser. No. 517,558

Claims priority, application France, Aug. 23, 1994, 94 10216

Int. Cl.[6] H01S *3/18*

U.S. Cl. 372—92 **2 Claims**

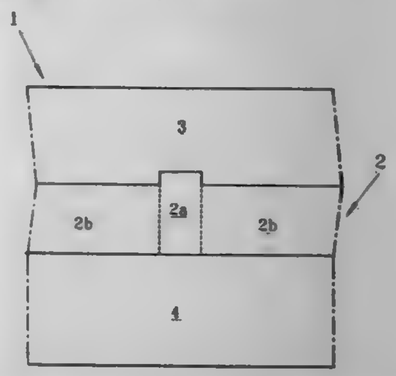

1. Optical, opto-electronic or photonic component, for a given operating wavelength, comprising at least one first optical cavity area disposed between two phase change type reflectors and confined laterally, by a second optical cavity area wherein said second optical cavity area is disposed between said reflectors; said first optical cavity area has a cut-off wavelength greater than a cut-off wavelength of said second optical cavity area, said operating wavelength lying between the cut-off wavelength of the first optical cavity area and the cut-off wavelength of the second optical cavity area,
wherein the optical thickness of said area between said two reflectors that corresponds to said optical cavity is greater than that of said area that surrounds it laterally;
wherein said area between said two reflectors that corresponds to said optical cavity and said area that surrounds it laterally are made from the same material, the thickness of said area that corresponds to said optical cavity being greater than that of said area that surrounds it laterally.

5,701,325
COMPOUND SEMICONDUCTOR DEVICE AND FABRICATION METHOD OF PRODUCING THE COMPOUND SEMICONDUCTOR DEVICE

Toshihiko Ouchi, Machida; Hajime Sakata, Atsugi; Noriaki Ohguri, Zama, and Mamoru Uchida, Yokohama, all of Japan, assignors to Canon Kabushiki Kaisha, Tokyo, Japan

Continuation of Ser. No. 64,884, May 24, 1993, abandoned.

This application Oct. 16, 1996, Ser. No. 731,682

Claims priority, application Japan, Jun. 4, 1992, 4-170194; Apr. 9, 1993, 4-107746

Int. Cl.[6] H01S *3/08;3/18;* H01L *21/20*

U.S. Cl. 372—96 **41 Claims**

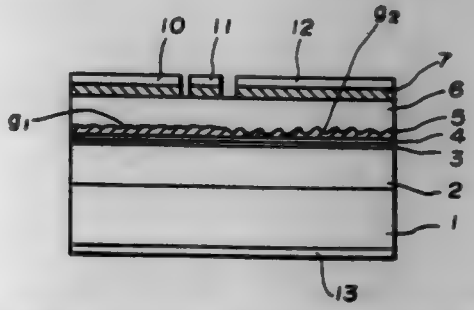

1. An optical compound semiconductor device comprising:
a semiconductor substrate;

a first growth epitaxial-layer structure formed on said substrate, said first growth epitaxial-layer structure having an epitaxial crystal surface;
at least one kind of fine uneven structure formed on the entire epitaxial crystal surface of said first growth epitaxial-layer structure; and
a second growth epitaxial-layer structure formed on said fine uneven structure,
wherein said at least one kind of fine uneven structure includes a first fine uneven structure which has an unevenness small enough to produce substantially zero diffraction effect on any wavelength of light used in said device, and said first fine uneven structure defines a plurality of surfaces having crystal orientations which are respectively different from a crystal orientation of said first growth epitaxial-layer structure, said plurality of surfaces being adapted to facilitate growth of said second growth epitaxial-layer structure.

5,701,326
LASER SCANNING SYSTEM WITH OPTICAL TRANSMIT/REFLECT MIRROR HAVING REDUCED RECEIVED SIGNAL LOSS

Edward Max Flowers, Grand Prairie, Tex., assignor to Loral Vought Systems Corporation, Grand Prairie, Tex.

Filed Apr. 16, 1996, Ser. No. 639,025

Int. Cl.[6] H01S *3/08;* G02B *5/10*

U.S. Cl. 372—99 **25 Claims**

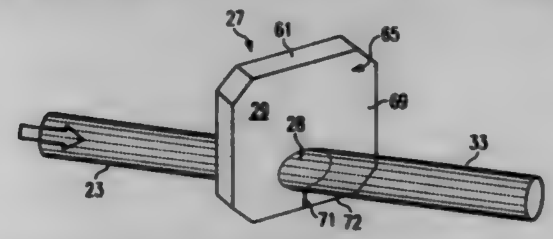

1. A transmit/reflect mirror comprising:
an optical substrate having first and second major faces which are parallel to each other, each of said first and second major faces having an optical area, each optical area being free of apertures extending through said optical substrate;
a first optical coating positioned on said optical area of said first major face of said optical substrate;
a second optical coating positioned on said optical area of said second major face of said optical substrate;
said first optical coating being an antireflection coating which permits an initial beam of radiation having a first wavelength and a first planar polarization component to pass through said first optical coating and said optical substrate, said first planar polarization component having a first planar polarization;
said second optical coating having a first portion thereof covering an inner area of the optical area of said second major face of said optical substrate and a second portion thereof covering an outer area of the optical area of said second major face of said optical substrate;
said first portion of said second optical coating being a coating which permits substantially all of said first planar polarization component of said initial beam of radiation to pass through said first portion of said second optical coating and to be directed outwardly from said mirror, and which reflects substantially all radiation incident thereon having said first wavelength and a planar polarization which is orthogonal to the first planar polarization of said first planar polarization component; and
said second portion of said second optical coating being a coating which reflects substantially all radiation incident thereto having said first wavelength.

22. A method comprising:
providing radiation having a first wavelength and containing a first planar polarization component, said first planar polarization component having a first planar polarization;
directing said radiation along a first axis toward a transmit/reflect mirror which has a primary surface and a secondary surface, and wherein said secondary surface has an inner area and an outer area, so that substantially all of said first planar polarization component passes through said primary surface and through said inner area of said secondary surface;
directing the resulting portion of first planar polarization component, which has been passed through said inner area of said secondary surface, along said first axis outwardly from said transmit/reflect mirror;
directing a second beam along said first axis toward both said inner area and said outer area of said secondary surface of said transmit/reflect mirror, said second beam being a reflection of said first beam such that said second beam contains both a second planar polarized component having said first planar polarization and a third polarized component having a second planar polarization which is orthogonal to said first planar polarization, said second beam having a greater cross-sectional area than said first beam, so that said outer area of said secondary surface reflects along a second axis a substantial portion of each of the second planar polarized component which is incident on said outer area and the third planar polarized component which is incident on said outer area, and so that said inner area of said secondary surface reflects along said second axis a substantial portion of the third planar polarized component which is incident on said inner area of said secondary surface while transmitting a substantial portion of the second planar polarized component which is incident on said inner area of said second surface, said second axis being inclined at a first angle to said first axis; and
detecting the resulting portions of said second beam which have been reflected along said second axis.

5,701,327
SATURABLE BRAGG REFLECTOR STRUCTURE AND PROCESS FOR FABRICATING THE SAME

John Edward Cunningham, Lincroft; William Young Jan, Scotch Plains; Wayne Harvey Knox, Rumson, and Sergio Tsuda, Red Bank, all of N.J., assignors to Lucent Technologies Inc., Murray Hill, N.J.

Filed Apr. 30, 1996, Ser. No. 640,377

Int. Cl.[6] H01S *3/08;* H01L *21/20;29/06;* G02F *1/03*

U.S. Cl. 372—99 **24 Claims**

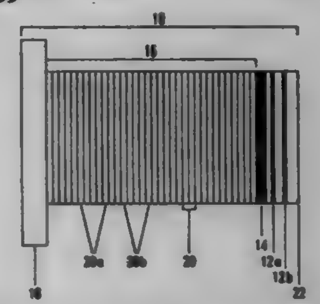

1. A dielectric mirror comprising a quarter-wave stack of dielectric material layers, an n half-wavelengths strain relief layer, where n is an odd integer greater than zero, and a quantum well layer within said strain relief layer so that said dielectric mirror provides a nonlinear saturation response to incident radiation.

19. A process for fabricating a dielectric mirror for providing a nonlinear saturation response to incident radiation, comprising the steps of:
forming a quarter-wave stack of dielectric material layers on a substrate;
heteroepitaxially growing an n half-wavelengths strain relief layer having at least one quantum well on an uppermost layer of said quarter wave stack, where n is an odd integer greater than zero.

5,701,328

CHIRPED SPREAD SPECTRUM POSITIONING SYSTEM

Leonard Schuchman, Potomac, Md., and Ronald Bruno, Arlington, Va., assignors to Stanford Telecommunications, Inc., Reston, Va.

Continuation-in-part of Ser. No. 363,773, Dec. 23, 1994, Pat. No. 5,604,765. This application Feb. 28, 1995, Ser. No. 393,410

Int. Cl.⁶ H04K *6/00;* **H04B** *7/185*

U.S. Cl. 375—204 **7 Claims**

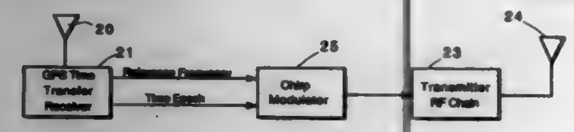

1. Positioning system comprising a plurality of earth based spread spectrum (SS) broadcasting stations arranged geographically in a cellular pattern, each said SS broadcasting station including a modulator providing a chirped SS signal structure in a channel which is orthogonal with respect to the SS signal structure of adjacent stations in said cellular pattern, each channel signal including navigation beacon data, and different phase for adjacent stations.

5,701,329

STANDBY POWER SAVINGS WITH CUMULATIVE PARTY CHECK IN MOBILE PHONES

Thomas Milton Croft, Cary, N.C.; Paul Wilkinson Dent, Stehag, Sweden; Lawrence J. Harte, Cary, N.C., and Torbjorn Solve, Lund, Sweden, assignors to Ericsson Inc., Research Triangle Park, N.C.

Continuation of Ser. No. 59,932, May 11, 1993, Pat. No. 5,568,513. This application Oct. 7, 1996, Ser. No. 729,718

Int. Cl.⁶ H04B *3/46*

U.S. Cl. 375—224 **12 Claims**

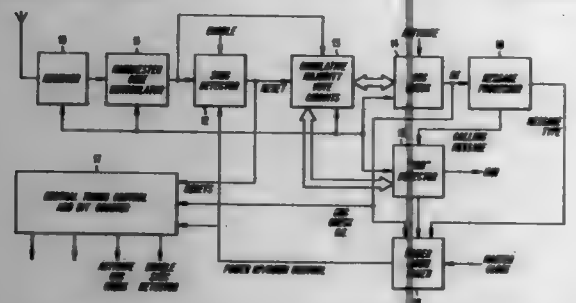

1. A mobile station having improved battery life in standby mode comprising:

a receiver for sequentially receiving repeated finite length data messages transmitted as radio signals from a base station;

a data demodulator for processing said received signals to generate data values;

a decoder to decode said data values to generate data bits and to produce an indication of correct or incorrect decoding based on cumulative majority voting on each of said data values; and

a power-down timer for reducing the power consumption of any of the above components for a determined time after receiving said indication of correct decoding from said decoder.

5,701,330

SERIAL COMMUNICATION METHOD AND APPARATUS

Raymond Lippmann, Ann Arbor; Michael John Schnars, Clarkston; James Edward Nelson, North Branch, and James Robert Chintyan, Davison, all of Mich., assignors to Delco Electronics Corporation, Kokomo, Ind.

Filed Dec. 16, 1994, Ser. No. 357,893

Int. Cl.⁶ H04B *3/00*

U.S. Cl. 375—257 **17 Claims**

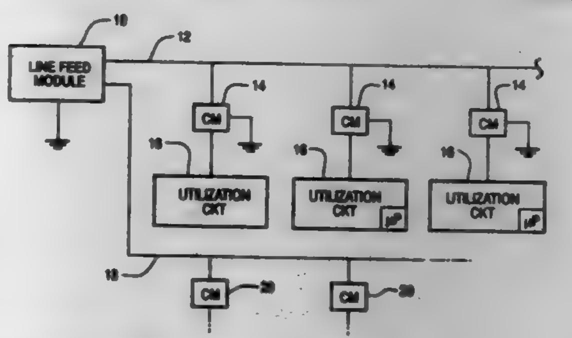

1. A digital communication link comprising:

a one-wire transmission line for carrying both data and power, and a common ground;

feed means for applying a dc voltage level to the line and a sine wave carrier imposed on the dc voltage level;

a plurality of communication modules coupled to the line;

at least one of the communication modules having means for writing data to the transmission line by selectively attenuating the amplitudes of individual cycles of the sine waves; and

at least another of the communication modules having means for reading data on the transmission line by sensing the amplitudes of individual sine wave cycles.

5,701,331

DIFFERENTIAL SIGNAL RECEIVER

Kenneth Stephen Hunt, Sandhurst, United Kingdom, assignor to LSI Logic Corporation, Milpitas, Calif.

Filed Jun. 6, 1995, Ser. No. 467,849

Claims priority, application United Kingdom, Jan. 20, 1995, 9501153

Int. Cl.⁶ H04L *27/06;27/14;27/22*

U.S. Cl. 375—316 **4 Claims**

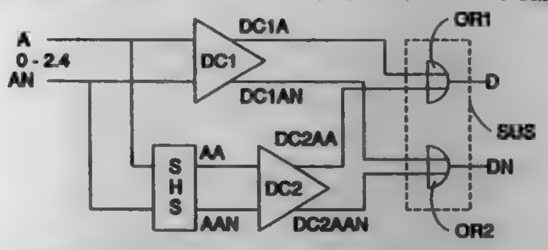

1. A differential signal receiver, comprising:

a first differential stage receiving differential signals and providing first differential outputs corresponding to the received differential signals, wherein the received differential signals are a first differential input and a second differential input;

a voltage shifting stage receiving the differential signals and providing voltage shifted differential signals, said voltage shifting stage comprising a first shifting transistor having a gate and a second shifting transistor having a gate, said gate of said first shifting transistor connecting to the first differential input and said gate of said second shifting transistor connecting to the second differential input;

a second differential stage receiving the voltage shifted differential signals from said voltage shifting stage and providing second differential outputs corresponding to the received voltage shifted differential signals; and

a summing stage for summing the first and second differential outputs from said first and second differential stages to form a differential output signal.

5,701,332

DETECTOR OF THE PRESENCE OF A SEQUENCE OF FSK MODULATED SIGNALS ARRIVING ON A MODEM

Christelle Decrouez, Brignoud, France, assignor to SGS-Thomson Microelectronics S.A., Saint Genis, France

Filed Sep. 11, 1995, Ser. No. 526,511

Claims priority, application France, Sep. 14, 1994, 94 11213

Int. Cl.⁶ H04L *27/14;5/16*

U.S. Cl. 375—334 **33 Claims**

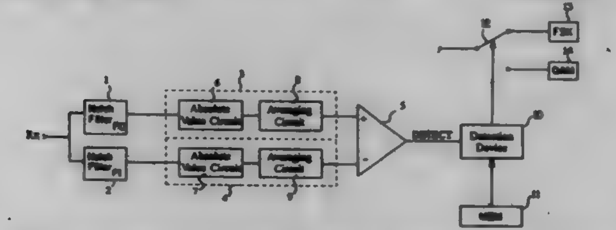

7. An apparatus for detecting at least one signal at one of a first frequency and a second frequency in an input signal, the apparatus comprising:

a first notch filter having an input that receives the input signal and an output that provides a first filtered signal substantially equaling the input signal with a first attenuated portion corresponding to the first frequency;

a first energy determinaticn circuit having an input coupled to the output of the first notch filter and an output that provides a first energy signal that corresponds to an energy value of the first filtered signal;

a second notch filter having an input receiving the input signal and an output that provides a second filtered signal substantially equaling the input signal with a second attenuated portion corresponding to the second frequency;

a second energy determination circuit having an input coupled to the output of the second notch filter and an output that provides a second energy signal that corresponds to an energy value of the second filtered signal; and

a comparator having a first input coupled to the output of the first energy determination circuit, a second input coupled to the output of the second energy determination circuit, and an output that provides an output signal based on a comparison of the first energy signal and the second energy signal, the output signal having a first state when the first energy signal is greater than the second energy signal and having a second state when the first energy signal is less than the second energy signal.

5,701,333

DIVERSITY RECEIVER IN WHICH RECEPTION CHARACTERISTICS CAN BE IMPROVED

Kazuhiro Okanoue, and Akihisa Ushirokawa, both of Tokyo, Japan, assignors to NEC Corporation, Japan

Filed Dec. 5, 1995, Ser. No. 567,669

Claims priority, application Japan, Dec. 5, 1994, 6-300574

Int. Cl.⁶ H04B *7/10*

U.S. Cl. 375—347 **12 Claims**

1. A diversity receiver for receiving a radio signal to produce a receiver output, said radio signal having a symbol rate, comprising:

a plurality of diversity branches having a predetermined distance therebetween, each of said diversity branches producing a received signal sequence in response to reception of said radio signal;

a plurality of branch metric producing circuits connected to said diversity branches, respectively, for producing a plurality of branch metrics by the use of said received signal sequence;

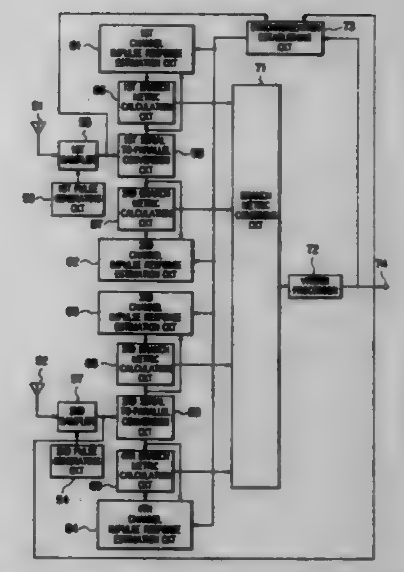

a branch metric combining circuit connected to said branch metric producing circuits for combining said branch metrics to one another to produce a combined branch metric; and

a Viterbi processor connected to said branch metric combining circuit for carrying out maximum likelihood sequence estimation in accordance with the combined branch metric to produce a decision signal as said receiver output,

each of said branch metric producing circuits comprising:

a sampler connected to one of said diversity branches for sampling said received signal sequence with plural times of said symbol rate to produce a sampled serial signal sequence;

a serial-to-parallel conversion circuit connected to said sampler for converting said sampled serial signal sequence into a plurality of parallel signals;

a plurality of channel impulse response estimation circuits connected to said serial-to-parallel conversion circuit for estimating channel impulse responses with reference to said parallel signals to produce a plurality of estimated impulse response signals; and

a plurality of branch metric calculation circuits connected to said channel impulse response estimation circuits, respectively, and to said serial-to-parallel conversion circuits each for calculating each of said branch metrics in accordance with each of said estimated impulse response signals and with each of said parallel signals to supply each of said branch metrics to said branch metric combining circuit.

5,701,334

PATH LENGTH DELAY COMPENSATION IN AN OPEN-LOOP SYSTEM

John Ramon Klimek, Cupertino, and David Weiss, Palo Alto, both of Calif., assignors to Siemens Business Communication Systems, Inc., Santa Clara, Calif.

Continuation of Ser. No. 422,674, Apr. 13, 1995, abandoned, which is a continuation of Ser. No. 994,392, Dec. 21, 1992, abandoned. This application Oct. 25, 1996, Ser. No. 736,873

Int. Cl.⁶ H04L *7/06*

U.S. Cl. 375—364 **8 Claims**

5. A method of compensating for propagation delay in communication of data over a transmission path from a first point to a second point, comprising the steps of:

establishing a selectable timing differential between the first and second points as a reference time, said timing differential being selected without using a signal from said second point to said first point;

receiving a receive timing signal;

generating a transmit timing signal, the step of generating a transmit timing signal including the substep of inducing a phase shift of the transmit timing signal relative to the receive

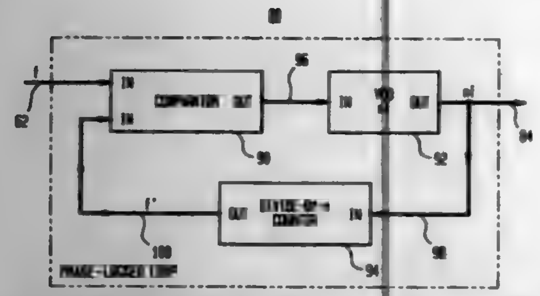

timing signal, said phase shift being equal to the difference between the reference time and the propagation delay between the first and second points; and

in response to the transmit timing signal, transmitting the data over the path from the second point to the first point.

5,701,335
FREQUENCY INDEPENDENT SCAN CHAIN
Alexander J. Neudeck, Windsor, Colo., assignor to Hewlett-Packard Co., Palo Alto, Calif.
Filed May 31, 1996, Ser. No. 658,911
Int. Cl.^{6} G11C *19/00*
U.S. Cl. 377—69 **13 Claims**

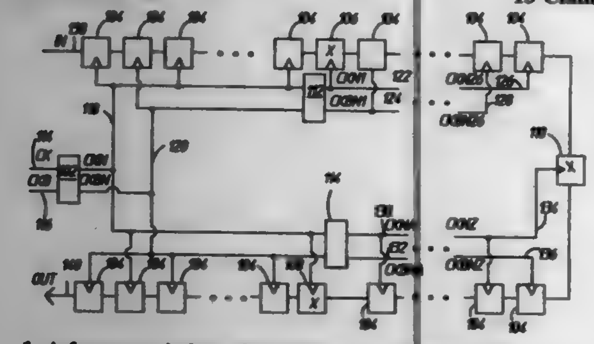

1. A frequency independent shift register, comprising:

a first plurality of latches, the first plurality of latches serially connected as a shift register having a first input, a first output, and a first direction of data flow from the first input to the first output;

a first clocking means, the first clocking means being propagated in the first direction of data flow and coupled to the first plurality of latches;

a second plurality of latches, the second plurality of latches serially connected as a shift register having a second input which is coupled to the first output, a second output, and a second direction of data flow from the second input to the second output and

a second clocking means, the second clocking means being propagated opposite the second direction of data flow and coupled to the second plurality of latches.

5,701,336
ROTARY-ANODE X-RAY TUBE
Heinz-Jürgen Jacob, Norderstedt, Germany, assignor to U.S. Philips Corporation, New York, N.Y.
Continuation of Ser. No. 461,458, Jun. 5, 1995, abandoned. This application Dec. 23, 1996, Ser. No. 771,877
Claims priority, application Germany, Jun. 4, 1994, 44 19 696.8
Int. Cl.^{6} H01J *35/26*
U.S. Cl. 378—132 **13 Claims**

1. A rotary-anode X-ray tube, comprising a rotary anode, a sleeve bearing which comprises a stationary bearing shaft and a rotary bearing shell which encloses the bearing shaft and is rigidly connected to the rotary anode, and a liquid lubricant which is

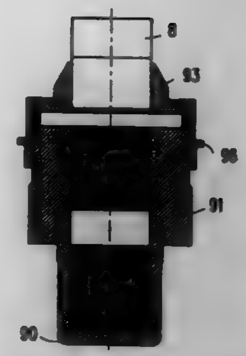

present between the bearing shaft and the bearing shell, said bearing shell being assembled from at least two axially aligned bearing shell portions which consist of essentially molybdenum and/or tungsten or alloys thereof and at least two connection elements which are made of a weldable material, wherein each of the connection elements is rigidly carried by an outer side of a different one of the bearing shell portions and is connected to another of the connection elements by way of a welded joint.

5,701,337
SYSTEM AND METHOD FOR IMPLEMENTING A COMBINED MOBILE PHONE AND PAGER IN A TELECOMMUNICATIONS NETWORK
Andrew Silver, Cote St-Luc, Canada, and Stamos Stamos, Bolnton Beach, Fla., assignors to Telefonaktiebolaget LM Ericsson (publ), Stockholm, Sweden
Filed Dec. 27, 1995, Ser. No. 579,005
Int. Cl.^{6} H04Q *7/38*
U.S. Cl. 379—57 **17 Claims**

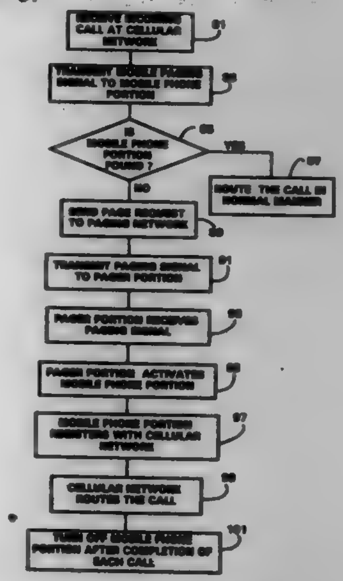

1. A method of activating a mobile phone having an on/off switch operationally associated with a pager through a relay, the method comprising the steps of:

transmitting at a paging station a paging signal;

receiving through the pager the paging signal;

determining whether a Mobile Paging Signal Indication Component (MPSIC) is present in said paging signal;

displaying a paging message through said pager in response to receiving said paging signal, upon determining that said MPSIC is not present in said paging signal; and

activating the relay in response to receiving said paging signal, upon determining that said MPSIC is present in said paging signal, thereby turning on the on/off switch, and activating the mobile phone.

5,701,338
CALL BOX WITH KEYBOARD COMMUNICATION
Thomas Leyen, Byron; Ronald Sheldrup, Menlo Park; Warren Burks, San Anselmo, and Moises Macias, San Francisco, all of Calif., assignors to DNB Dataware Sciences, Inc. Technologies, Barbados, Barbados
Filed Apr. 11, 1995, Ser. No. 419,662
Int. Cl.^{6} H04M *11/04;11/00;17/00;* H04B *17/00*
U.S. Cl. 379—58 **7 Claims**

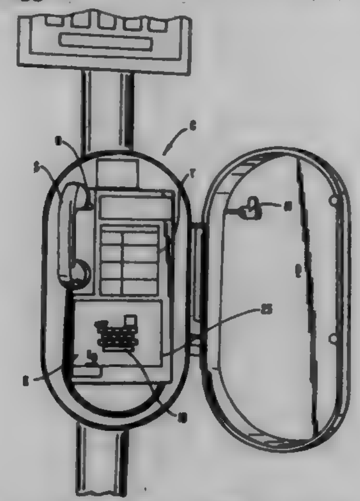

1. A cellular telephone call box With switching between voice signal and keyboard signal comprising:

a cellular transceiver having an inactive state and an active state for transceiving with a remote station;

a cabinet for containing the cellular transceiver;

a door closing over the cabinet containing the cellular transceiver;

a handset operatively connected to the cellular transceiver;

means connected to the door for activating the cellular transceiver from the inactive state to the active state responsive to opening of the door;

a keyboard device having a keypad switch for activating the keyboard;

a keyboard interface connected between the handset and the cellular transceiver, the keyboard interface responsive to the keypad switch for disconnecting the handset and connecting the keyboard to the cellular transceiver;

a display connected to the keyboard;

first means for causing the display to identify function of the keyboard;

second means responsive to the keypad switch for causing the display announce call status to a user utilizing the keyboard through the display; and,

third means for displaying transceiver messages between the cellular transceiver and a remote receiving station.

5,701,339
DIAL-LESS CALLING DEVICE
Minoru Suda, Tokyo, Japan, assignor to Kokusai Denshin Denwa Kabushiki Kaisha, Japan
Filed Oct. 12, 1995, Ser. No. 542,355
Claims priority, application Japan, Mar. 30, 1995, 7-095908
Int. Cl.^{6} H04M *1/64*
U.S. Cl. 379—88 **9 Claims**

1. A dial-less calling device, comprising:

a card, registered to which are no less than an access number for calling the dial-less calling service that connects a line to a destination party and a user identification number for identifying a user;

a telephone with a function for reading the access number and the user identification number registered to the card and that automatically calls the access number;

a means of receiving the access number and connecting the telephone;

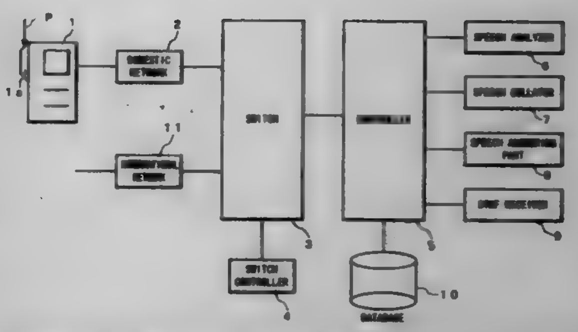

a database, registered to which are no less than the user identification number, destination names, and the telephone numbers corresponding to the destination names;

a means of searching a telephone number based on the user identification number and a destination name spoken by the user; and

a means of connecting the line to the destination party using the searched telephone number.

5,701,340
AD-HOC CONFERENCING METHOD
Nicholas Zwick, Far Hills, N.J., assignor to Dialogic Corporation, Parsippany, N.J.
Filed Nov. 20, 1995, Ser. No. 559,606
Int. Cl.^{6} H04M *3/42*
U.S. Cl. 379—204 **12 Claims**

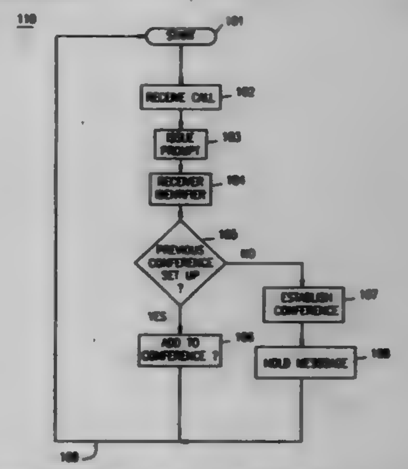

1. A method of implementing a call conference comprising:

receiving from a first conferee, a conference identifier at a switch;

determining if said identifier was previously entered by a second conferee;

if not, maintaining a connection between the switch and the first conferee, wherein, said conference identifier has not been previously allocated for said call conference by said switch.

5,701,341
MULTI-PURPOSE BATTERY FOR A MOBILE TELEPHONE
Hung Chin Kuo, P.O. Box 82-144, Taipei, Taiwan
Filed Jun. 10, 1994, Ser. No. 257,566
Int. Cl.^{6} H04M *1/00*
U.S. Cl. 379—433 **1 Claim**

1. A multi-purpose battery for a mobile telephone comprising:

a casing;

a battery pack disposed within said casing for powering the mobile telephone;

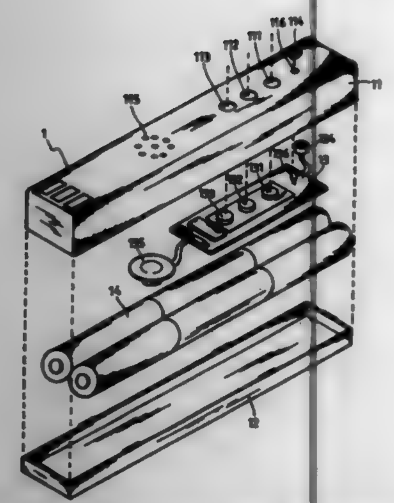

a vocal processor fitted in said casing and connected with said battery pack, said vocal processor including an analog/digital converter, a memory unit and a signal amplifier;
a microphone connected with said vocal processor;
a speaker connected with said vocal processor;
a record switch connected with said vocal processor;
a playback switch connected with said vocal processor; and
an illumination switch connected between illuminating means and said battery pack.

5,701,342
COMPLEX DOCUMENT SECURITY
Mark Stephen Anderson; John Desborough Yesberg; Michael Pope; Lisa Nayda; Ken Hayman, and Brendan Beahan, all of Salisbury, Australia, assignors to The Commonwealth of Australia of Anzac Park, Canberra, Australia
PCT No. PCT/AU93/00645, § 371 Date Aug. 28, 1995, § 102(e) Date Aug. 28, 1995, PCT Pub. No. WO94/14259, PCT Pub. Date Jun. 23, 1994
PCT Filed Dec. 14, 1993, Ser. No. 481,397
Claims priority, application Australia, Dec. 14, 1992, PL6312
Int. Cl.⁶ H04L *9/32*
U.S. Cl. 380—4 **31 Claims**

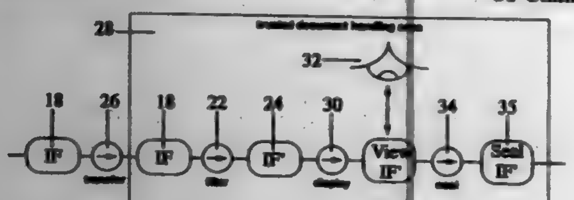

1. A method of handling a document for transmission external of a secure computer environment, comprising the steps of:
(a) applying a document to at least one filter to eliminate or corrupt the content or form of covert information contained within said document;
(b) displaying to a viewer said filtered document or a predetermined portion thereof in a trusted manner; and
(c) communicating said filtered document in a secure manner, external of said secure computer environment, if said filtered and displayed document appears to be acceptable to said viewer.

5,701,343
METHOD AND SYSTEM FOR DIGITAL INFORMATION PROTECTION
Youichi Takashima; Shinji Ishii, and Kiyoshi Yamanaka, all of Kanagawaken, Japan, assignors to Nippon Telegraph & Telephone Corporation, Tokyo, Japan
Filed Nov. 29, 1995, Ser. No. 564,925
Claims priority, application Japan, Dec. 1, 1994, P6-298702; Dec. 2, 1994, P6-299940
Int. Cl.⁶ H04L *9/00*
U.S. Cl. 380—4 **35 Claims**

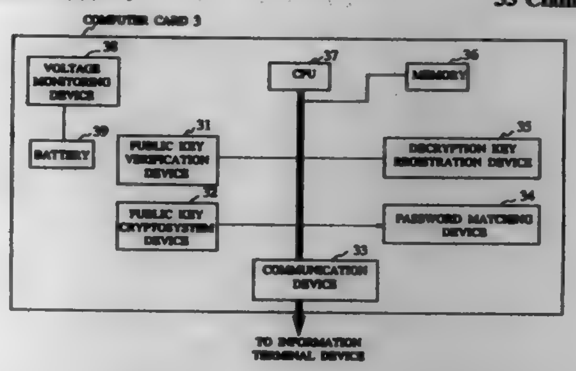

1. A method for digital information protection in a system in which a user makes an access to a digital information provided by an information center, by connecting a computer card owned by the user to an information terminal device connected with the information center, the method comprising the steps of:
(a) carrying out a mutual authentication between the computer card and the information terminal device;
(b) carrying out a user authentication by the computer card through the information terminal device;
(c) sending an information request specifying the desired digital information of the user from the information terminal device to the information center by signing and encrypting an information identifier for identifying the desired digital information;
(d) sending the work key for encrypting the desired digital information from the information center to the computer card by a cipher communication using a public key cryptosystem;
(e) obtaining and registering the work key sent from the information center at the computer card, and sending a work key receipt signature from the computer card to the information center;
(f) receiving a work key request message containing a random number from the information terminal device at the computer card, encrypting the work key according to the random number, and sending an encrypted work key from the computer card to the information terminal device;
(g) encrypting the desired digital information specified by the information request by using the work key at the information center, and sending the encrypted digital information from the information center to the information terminal device;
(h) receiving and decrypting the encrypted work key sent from the computer card so as to obtain the work key at the information terminal device, receiving and decrypting the encrypted digital information sent from the information center by using the work key, and providing the decrypted digital information to the user at the information terminal device; and
(i) sending an encrypted information receipt signature from the information terminal device to the information center, and recording the information request, the work key receipt signature, and the encrypted information receipt signature as a ground for charging at the information center.

5,701,344
AUDIO PROCESSING APPARATUS
Tetsuya Wakui, Yokohama, Japan, assignor to Canon Kabushiki Kaisha, Tokyo, Japan
Filed Aug. 5, 1996, Ser. No. 692,332
Claims priority, application Japan, Aug. 23, 1995, 7-235930; Jul. 18, 1996, 8-189325
Int. Cl.⁶ H04S *1/00;* **H04B** *15/00;* **H04R** *3/00*
U.S. Cl. 381—1 **6 Claims**

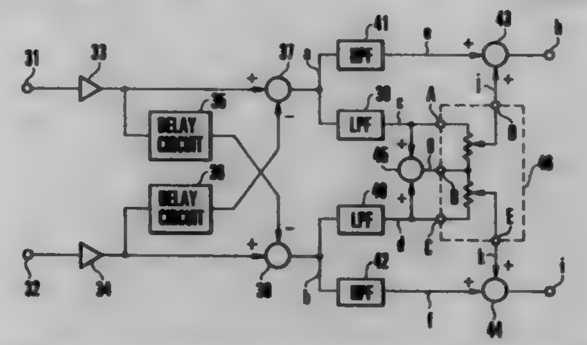

1. An audio processing apparatus for processing an audio signal, comprising:
a) a first input terminal arranged to receive a left-side audio signal composed mainly of an audio signal corresponding to a sound coming from a left side;
b) a second input terminal arranged to receive a right-side audio signal composed mainly of an audio signal corresponding to a sound coming from a right side;
c) first delay means for delaying the left-side audio signal received by said first input terminal to output a resultant signal;
d) second delay means for delaying the right-side audio signal received by said second input terminal to output a resultant signal;
e) first subtraction means for subtracting the signal outputted from said second delay means from the left-side audio signal received by said first input terminal to output a resultant signal;
f) second subtraction means for subtracting the signal outputted from said first delay means from the right-side audio signal received by said second input terminal to output a resultant signal;
g) first frequency band signal extraction means for extracting from the signal outputted from said first subtraction means a first low frequency band signal and a first high frequency band signal to output the first low frequency band signal and the first high frequency band signal;
h) second frequency band signal extraction means for extracting from the signal outputted from said second subtraction means a second low frequency band signal and a second high frequency band signal to output the second low frequency band signal and the second high frequency band signal;
i) first addition means for adding together the first low frequency band signal outputted from said first frequency band signal extraction means and the second low frequency band signal outputted from said second frequency band signal extraction means to output a resultant signal;
j) second addition means for adding together the first high frequency band signal outputted from said first frequency band signal extraction means and the signal outputted from said first addition means to output a resultant signal; and
k) third addition means for adding together the second high frequency band signal outputted from said second frequency band signal extraction means and the signal outputted from said first addition means to output a resultant signal.

5,701,345
MULTIPATH INTERFERENCE REDUCTION SYSTEM AND METHOD
Gordon Phillip Howlett, Greentown, and John Norris Reigler, Kokomo, both of Ind., assignors to Delco Electronics Corporation, Kokomo, Ind.
Filed Mar. 25, 1996, Ser. No. 621,549
Int. Cl.⁶ H04H *5/00*
U.S. Cl. 381—13 **11 Claims**

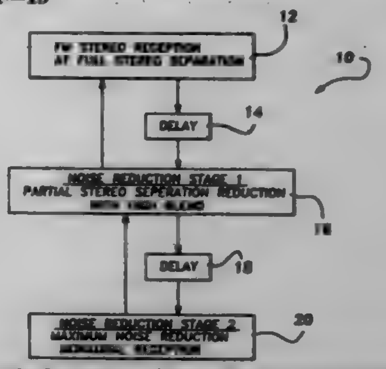

1. A method of reducing effects of noise interference associated with reception of FM stereo signals comprising the steps of:
receiving an FM stereo signal;
determining an amount of noise present in the detected FM stereo signal;
reducing stereo separation in the detected signal when the determined amount of noise exceeds a first threshold limit;
adjusting the stereo separation reduction as a function of audio frequency of the noise so as to provide a greater stereo separation reduction at a higher noise frequency than at a lower noise frequency to enhance audio sound;
determining when the determined amount of noise exceeds a second threshold limit which is greater than the first threshold limit; and
further reducing the stereo separation so as to provide substantially monaural reception when the amount of noise exceeds the second threshold limit.

5,701,346
METHOD OF CODING A PLURALITY OF AUDIO SIGNALS
Jürgen Herre, Buckenhof; Berhard Grill, Lauf; Ernst Eberlein, Grossenseebach; Karlheinz Brandenburg, Erlangen, and Dieter Seitzer, Erlangen, all of Germany, assignors to Fraunhofer-Gesellschaft zur Forderung der Angewandten Forschung e.V., Munich, Germany
PCT No. PCT/EP95/00378, § 371 Date Sep. 12, 1996, § 102(e) Date Sep. 12, 1996, PCT Pub. No. WO95/26083, PCT Pub. Date Sep. 28, 1995
PCT Filed Feb. 2, 1995, Ser. No. 704,730
Claims priority, application Germany, Mar. 18, 1994, 440 93 69.3
Int. Cl.⁶ H04S *5/02*
U.S. Cl. 381—18 **11 Claims**

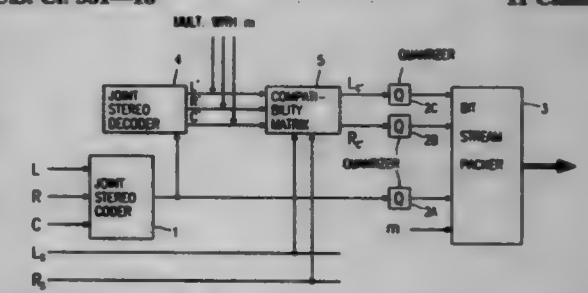

1. A method of coding a plurality of audio signals, comprising the steps of:
combining at least two signals by joint stereo coding so as to obtain a jointly coded signal,

decoding the jointly coded signal so as to provide simulated decoded signals,

combining the simulated decoded signal and at least one additional signal so as to provide signals that are compatible with existing decoders, said simulated decoded signal and said at least one additional signal being combined in a compatibility matrix by matricizing, and

dynamic weighting of either the compatible signals or the simulated decoded signals by means of at least one dynamic correction factor so as to approximate the compatible signals with regard to their acoustically relevant signal properties to the signals which would be produced if these at least two signals and the additional signal were directly matricized by means of this compatibility matrix.

5,701,347

AUDIO SYSTEM FOR A PERSONAL COMPUTER

George R. Daniels, Spring, Tex.; Thor R. Halseth, Simi Valley, and Daniel R. Vehse, Oxnard, both of Calif., assignors to Compaq Computer Corporation, Houston, Tex.

Continuation of Ser. No. 303,419, Sep. 9, 1994, abandoned, which is a continuation-in-part of Ser. No. 24,922, Jun. 23, 1994, Pat. No. Des. 366,478. This application Sep. 30, 1996, Ser. No. 723,281

Int. Cl.^{6} H04R *5/00*

U.S. Cl. 381—24 **17 Claims**

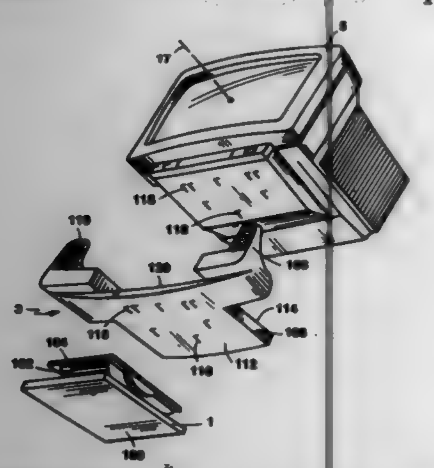

1. An audio module for use with a monitor that is supported by a pedestal at a mechanical interface and is removable from the pedestal at the interface, the interface including an element on the monitor that mates removably with an element on the pedestal, the audio module comprising:

a base that includes two mating devices, one configured to mate with the interface element on the monitor, the other configured to mate with the interface element of the pedestal so that the module may be interposed between the monitor and the pedestal; and

a speaker mounted on the base.

5,701,348

ARTICULATED HEARING DEVICE

Adnan Shennib, Fremont, and Richard Urso, Redwood City, both of Calif., assignors to Decibel Instruments, Inc., Hayward, Calif.

Filed Dec. 29, 1994, Ser. No. 365,913

Int. Cl.^{6} H04R *25/00*

U.S. Cl. 381—68.6 **46 Claims**

1. A hearing device, comprising:

a main module adapted to contain any of a microphone, a battery, device controls, and a signal processing circuit;

a receiver module adapted to contain a receiver; and

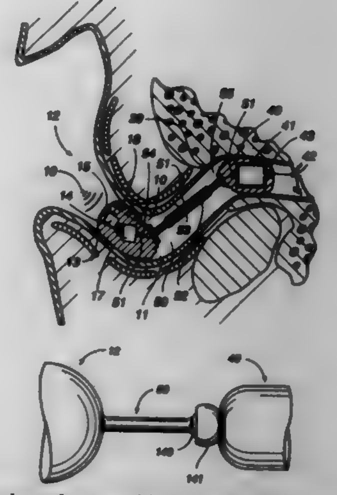

a connector adapted to provide an electrical connection between said main module and said receiver module;

wherein at least two of said main module, receiver module, and connector are connected by an articulating joint, such that said modules move freely and independently, one relative to the other within a range of movement and to freely maintain a position at any point within this range of movement, to permit independent movement of any of said main module and said receiver module in response to in situ ear canal deformation; and wherein said main module and said receiver module are each contained in separate, relatively rigid, non-resilient housings.

5,701,349

ACTIVE VIBRATION CONTROLLER

Hisashi Sano; Sou Nakamura; Hideshi Sawada, all of Wako; Shuichi Adachi, and Hideki Kasuya, both of Utsunomiya, all of Japan, assignors to Hokda Giken Kogyo Kabushiki Kaisha, Tokyo, Japan

Filed Jun. 7, 1995, Ser. No. 476,332

Claims priority, application Japan, Jul. 14, 1994, 6-162458

Int. Cl.^{6} A61F *11/06;* **H03B** *29/00*

U.S. Cl. 381—71 **35 Claims**

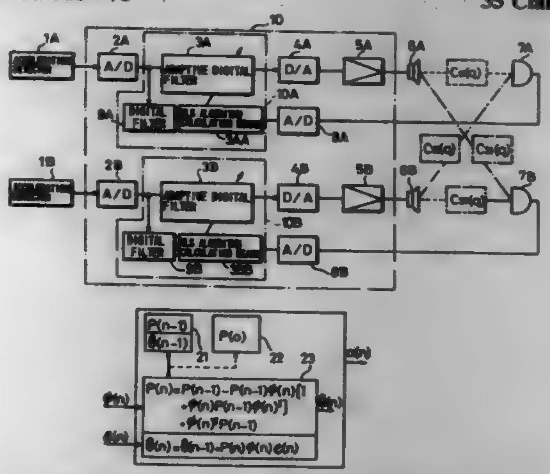

1. An active vibration controller controlling vibration within a sound field comprising:

a first vibration detector generating reference input signals in response to detected vibrations from vibration generating sources;

a controllable vibration source provided in the sound field;

a second vibration detector provided in the sound field for receiving vibrations generated in the sound field by said controllable vibration source and by vibrations generated in said sound field from said vibration generating sources, and

generating an error signal on the basis of differences between both said vibrations; and

an adaptive digital filter, using the reference input signal and the error signal as inputs and having filter factors updated in real time in accordance with an updating parameter recursively updated and processed, with an initial value of the updating parameter being a predetermined positive real number, by using the reference input signals outputted from said first vibration detector, said adaptive digital filter minimizing the error signal by energizing said controllable vibration source to reduce vibrations in said sound field;

said digital filter calculating said filter factors using a recursive least squares algorithm having a forgetting factor.

5,701,350

ACTIVE ACOUSTIC CONTROL IN REMOTE REGIONS

Steven R. Popovich, Stoughton, Wis., assignor to Digisonix, Inc., Middleton, Wis.

Filed Jun. 3, 1996, Ser. No. 657,295

Int. Cl.^{6} A61F *11/06*

U.S. Cl. 381—71 **20 Claims**

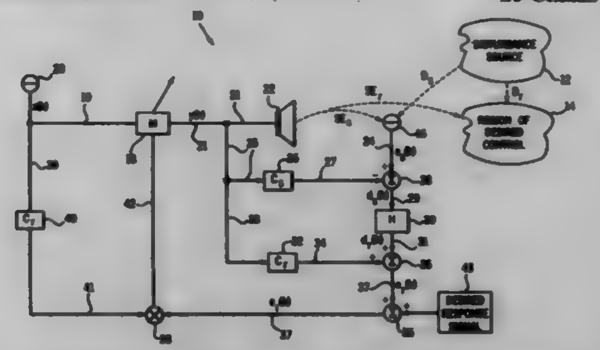

1. An active acoustic attenuation system for attenuating an acoustic disturbance from a disturbance source in a region of desired control that is remote from an error sensor, the system comprising:

an adaptive filter that inputs a reference signal and outputs a correction signal;

an output transducer that inputs the correction signal and outputs a secondary input that combines with an acoustic disturbance to yield acoustic output;

an error sensor that senses the acoustic output at a first location remote from a region of desired control, and outputs an error signal in response thereto;

a first C filter modeling a first auxiliary path between the output of the adaptive filter and the output of the error sensor, the first C filter inputting the correction signal and outputting a first C-filtered correction signal;

a second C filter modeling a second auxiliary path between the output of the adaptive filter and the region of desired control, the second C filter inputting the correction signal and outputting a second C-filtered correction signal;

a first summer that inputs the error signal and the first C-filtered correction signal and outputs a first intermediate disturbance signal;

an H filter representing a relationship between a disturbance signal as measured by the error sensor and a disturbance signal as would be measured in the region of desired control, the H filter inputting the first intermediate disturbance signal and outputting a second intermediate disturbance signal; and

a second summer that inputs the second intermediate disturbance signal and the second C-filtered correction signal and outputs an adjusted error signal that is used to update the adaptive filter.

5,701,351

Patent Not Issued For This Number

5,701,352

TONE SUPPRESSION AUTOMATIC GAIN CONTROL FOR A HEADSET

William A. Williamson, III, Stone Mountain, Ga., assignor to BellSouth Corporation, Atlanta, Ga.

Filed Jul. 14, 1994, Ser. No. 274,832

Int. Cl.^{6} H04R *1/00;* **H03G** *9/00;3/00*

U.S. Cl. 381—104 **37 Claims**

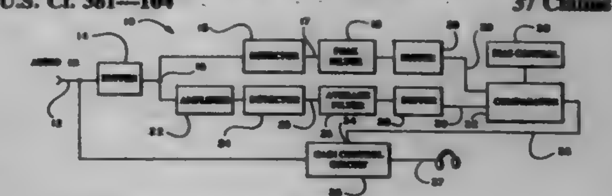

1. A tone attenuator circuit, comprising:

first means for generating a peak signal proportional to the peak level of an input signal;

second means for generating an average signal proportional to the average level of the input signal; and

gain control means connected to said first and second means for varying the gain applied to the input signal;

wherein said gain control means is responsive to said peak signal and said average signal to vary the gain when said input signal is a tone, said input signal being said tone when said average signal reaches a predetermined level relative to said peak signal.

5,701,353

AUDIO SIGNAL PROCESSING CIRCUIT FOR COMPRESSING OR EXPANDING AUDIO SIGNAL IN WHICH OUTPUT DC VOLTAGE IS CONTROLLED IN RESPONSE TO REFERENCE VOLTAGE

Takao Mamada, Ota, Japan, assignor to Sanyo Electronic Co., Ltd., Moriguchi, Japan

Filed Jun. 5, 1996, Ser. No. 658,575

Claims priority, application Japan, Jun. 12, 1995, HEI 7-144735; Jun. 12, 1995, HEI 7-144736

Int. Cl.^{6} H03G *7/00*

U.S. Cl. 381—106 **12 Claims**

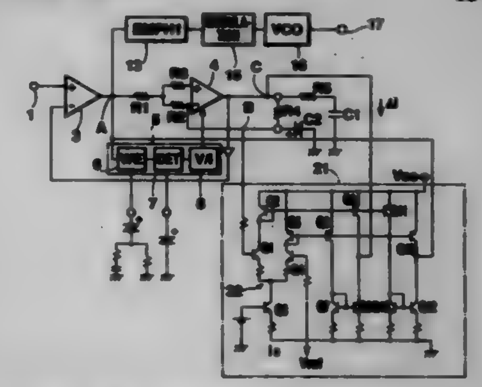

1. An audio signal recording device for compressing an audio signal, comprising:

a first operational amplifier capable of receiving an audio signal at a non-inverting input terminal and a feedback signal at an inverting input terminal so as to output a compressed signal in response to a difference between the audio signal and the feedback signal;

a second operational amplifier capable of amplifying the compressed signal output from said first operational amplifier by a variable amplification rate so as to transmit a feedback signal

to the inverting terminal of said first operational amplifier, the feedback signal being constituted of an amplified signal based on the compressed signal;
a control circuit capable of controlling an amplification rate of said second operational amplifier in response to a signal level of the compressed signal output from said first operational amplifier; and
a DC control circuit capable of adjusting a DC level of the compressed signal output from said first operational amplifier to be equal to a predetermined reference voltage.

5,701,354
TELEPHONE MOUTHPIECE FOR PREVENTING WIND NOISES AND METHOD FOR REDUCING WIND NOISES INPUT THERETO
Motoyoshi Komoda, Tokyo, and Yukio Murata, Saitama, both of Japan, assignors to NEC Corporation, Tokyo, Japan
Filed Oct. 10, 1995, Ser. No. 541,411
Claims priority, application Japan, Oct. 12, 1994, 6-246109
Int. Cl.⁶ H04R *25/00*
U.S. Cl. 381—157 **20 Claims**

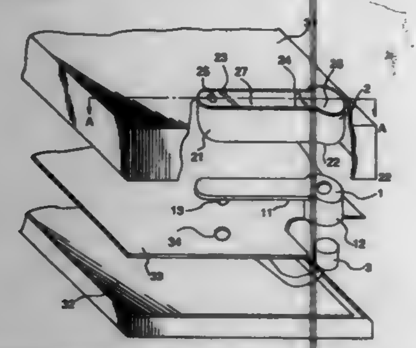

1. A telephone mouthpiece for preventing wind noise, comprising:
a telephone mouthpiece enclosure;
an acoustic duct box arranged within said telephone mouthpiece enclosure and having a first surface and a second surface facing said first surface, said first surface having an acoustic perforation formed therein;
a microphone arranged on said second surface of said acoustic duct box, said microphone having a receiving surface facing said first surface; and
a plurality of partitions arranged within said acoustic duct box between said acoustic perforation and said microphone receiving surface, each of said plurality of partitions having a slit formed therein.

5,701,355
MICROPHONE FOR A TWO WAY RADIO
Michael H. Brannan, Ft. Lauderdale; Jorge Luis Garcia, Plantation; Jerry Ray Nichols, Boynton Beach, and Masaru Tokiyama, Coral Springs, all of Fla., assignors to Motorola, Inc., Schaumburg, Ill.
Filed Aug. 5, 1996, Ser. No. 691,187
Int. Cl.⁶ H04R *25/00*
U.S. Cl. 381—169 **22 Claims**

1. A microphone for a two-way radio, comprising in combination:
a front housing assembly, comprising;
a front housing having an aperture formed therein and having a hoop on a lower portion of the front housing;
a grill secured to the front housing; and
a membrane covering the aperture and disposed between the grill and the front housing;
a PTT assembly, comprising a PTT button and a spring means to urge the PTT button outwards from the microphone;

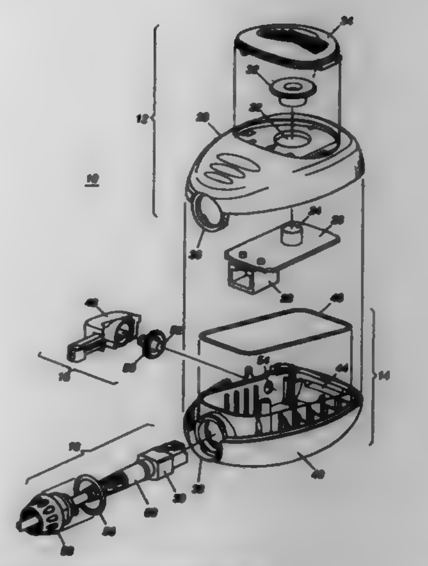

a rear housing assembly, comprising;
a rear housing having a hoop receiver on a lower portion of the rear housing and having a PTT receiving portion on a side portion of the rear housing; and
the PTT assembly disposed within the PTT receiving portion;
a power cable having a locking collar to engage the hoop; and
wherein the hoop engages the hoop receiver, the power cable is routed through the hoop, and the locking collar is retained in the hoop when the front housing assembly is assembled to the rear housing assembly.

5,701,356
NECK ENGAGEABLE TRANSDUCER SUPPORT ASSEMBLY AND METHOD OF USING SAME
Thomas H. Stanford, Escondido; Farhad Noroozi Sahne, San Diego; Thomas P. Riches, Temecula, and Robert O'Neill, San Diego, all of Calif., assignors to HM Electronics, San Diego, Calif.
Filed Dec. 5, 1995, Ser. No. 567,154
Int. Cl.⁶ H04R *25/00*
U.S. Cl. 381—187 **25 Claims**

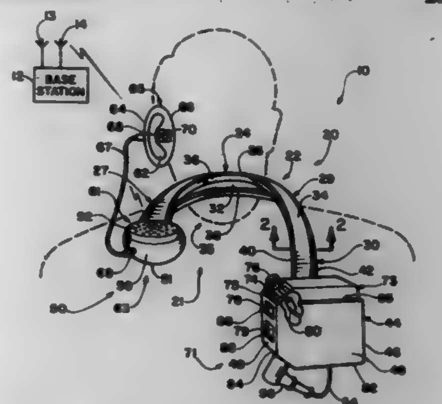

1. A transducer support assembly worn by a user for communicating with electrical equipment, comprising:
electrical transducer means for facilitating communication;
a U-shaped neck engageable support means adapted to be worn about and to be supported by the neck of the user during normal operation for positioning the transducer support assembly at about the upper body portion of the user, said transducer means being so constructed and arranged on said support means to be disposed adjacent to the head of the user when the support assembly is worn around and supported by the neck;
said support means including an elongated strap composed of stiff material and configured to conform generally to the body

of the user for helping to maintain the position of the transducer support assembly on the upper body portion of the user, said strap having an elongated neck engageable portion for helping to support the transducer support assembly by engagement with the back of the neck of the user during normal operation;
said strap further having a pair of chest engageable leg portions connected integrally to the opposite ends of said neck engageable portion and adapted to fit over the shoulders of the user, said leg portions being adapted to lie substantially flat against the chest of the user, wherein said neck engageable portion and said leg portions each have a respective underside surface for defining a common continuous underside surface to conform to and to engage the body of the user when the support means is worn about the neck of the user during normal operation;
said neck engageable portion having a wide portion adapted to extend in overlying substantially continuous engagement with the neck or back for resisting said stiff strap from lifting said underside surface away from engagement with the neck of the user to help resist said leg portions from swinging inadvertently away from the body of the user when the user bends forwardly;
said neck engageable portion and said leg portions each further having friction means forming said common underside surface for engaging the neck and chest of the user to help limit inadvertent shifting movement of the transducer support assembly relative to the body of the user; and
said support means further including a pair of intermediate twisted portions interconnecting said leg portions with said neck engageable portion to permit said common underside surface to conform substantially continuously to the body of the user for enabling the underside of said neck engageable portion to lie substantially flat against the back of the neck of the user while the underside of said leg portions lie substantially flat against the chest of the user.

5,701,357
LOUDSPEAKER STRUCTURE WITH A DIFFUSER
Shinta Matsuo, Kokubunji, and Yoshio Sakamoto, Hachioji, both of Japan, assignors to Kabushiki Kaisha Kenwood, Tokyo, Japan
Division of Ser. No. 517,352, Aug. 21, 1995, which is a continuation of Ser. No. 223,968, Apr. 6, 1994, abandoned. This application Sep. 13, 1996, Ser. No. 713,350
Claims priority, application Japan, Apr. 9, 1993, 5-107367
Int. Cl.⁶ H04B *25/00*
U.S. Cl. 381—199 **5 Claims**

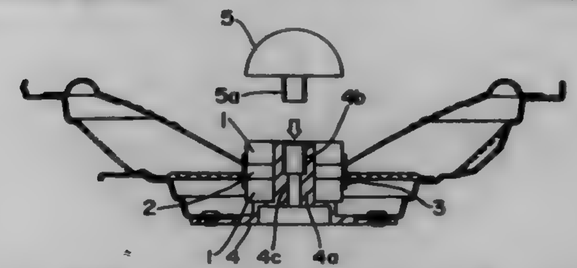

1. A structure of a loudspeaker including a repulsion magnetic circuit formed by two disc-like magnets with the same polarity being faced with each other and by a disc-like plate made of magnetic material and interposed between the two magnets, and a voice coil disposed in a magnetic field at the outer circumferential area of the plate, the two magnets and the plate being respectively provided with apertures in their centers, the structure comprising:
a holder for holding magnetic circuit components, said magnets and said plates are disposed in a stack on said holder with a shaft which passes through the apertures of said magnets and said plate;
a diffuser made of non-magnetic and high thermal conductive material and formed in a bulk, the bottom end surface of which has the substantially same area as that of and is closely contacted with the top end surface of the upper-positioned magnet to effectively dissipate the heat in said magnets,
wherein said magnets and said plate are fastened and fixed by coupling said diffuser to said shaft or said holder with screw means.

5,701,358
ISOBARIC LOUDSPEAKER
John T. Larsen, 1443 Foxbore, and James R. Larsen, 912 Windsor Ct., both of Blue Springs, Mo. 64015
Continuation-in-part of Ser. No. 277,651, Jul. 5, 1994, abandoned. This application Oct. 25, 1995, Ser. No. 548,027
Int. Cl.⁶ H04R *25/00*
U.S. Cl. 381—202 **15 Claims**

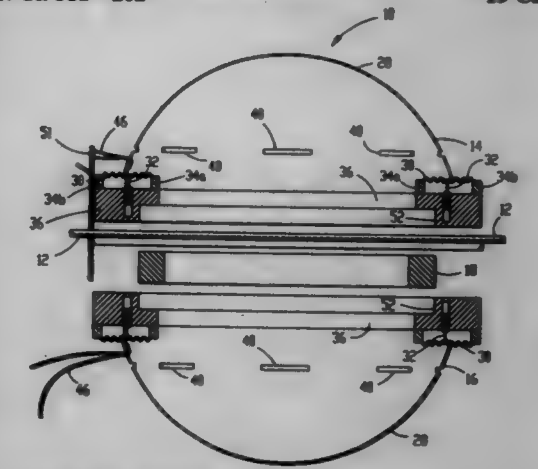

1. A loudspeaker comprising:
a pair of domed-shaped diaphragm assemblies each including an outer diaphragm and a voice coil for driving said outer diaphragm;
mounting means for mounting said diaphragm assemblies in an opposed relationship so that said outer diaphragms extend in opposite directions; and
a magnet assembly positioned between said diaphragm assemblies for providing a magnetic flux in the vicinity of both of said diaphragm assemblies, said magnet assembly including
a pair of magnetic flux rings each positioned adjacent one of said diaphragm assemblies for producing a directional magnetic flux in the vicinity of its respective voice coil when said magnetic flux rings are magnetized, and
only one radial magnet positioned between said magnetic flux rings for magnetizing said magnetic flux rings for producing a radial magnetic flux in the vicinity of said diaphragm assemblies.

5,701,359
FLAT-PANEL SPEAKER
Edward W. Guenther, Paradise Valley, and Stephen Leigh, Scottsdale, both of Ariz., assignors to Precision Power, Phoenix, Ariz.
Filed Apr. 6, 1995, Ser. No. 418,268
Int. Cl.⁶ H04R *25/00*
U.S. Cl. 381—203 **15 Claims**

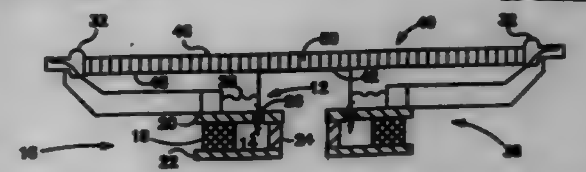

1. An audio speaker system for producing sound in response to varying audio signals, comprised of:

(a) a voice coil assembly including a voice coil that produces a varying coil current in response to the varying audio signals;
(b) a field structure that generates a magnetic field and that is operatively positioned relative to the voice coil so that the voice coil assembly is driven in a reciprocating piston motion corresponding to the varying coil current;
(c) a first suspension system coupled to and movably supporting the voice coil assembly in its reciprocating piston motion;
(d) a substantially flat diaphragm coupled to the voice coil assembly and driven in a reciprocating piston motion corresponding to the motion of the voice coil assembly, the diaphragm comprising:
(1) a lower carbon-reinforced skin,
(2) an upper carbon-reinforced skin, and
(3) an aramid honeycomb core having a density in the range of approximately 1.8 pcf and less than 4.0 pcf and bonded between the upper and lower skins with an epoxy adhesive,
(e) a second suspension system coupled to and movably supporting the diaphragm in its reciprocating piston motion;
(f) a frame structure coupled to and supporting the first and second suspension systems and the field structure; and
(g) wherein the upper and lower skins of the diaphragm each comprises a cross-ply including at least two plies having substantially unidirectional carbon filaments that have been dipped in an epoxy resin and are constructed with the direction of the carbon filaments of one ply substantially out of phase relative to the direction of the carbon filaments of a second ply.

5,701,360
FOURIER RECONSTRUCTION OF COMPUTER TOMOGRAPHY IMAGES WHICH REPRESENT A SELECTABLE REGION OF THE EXAMINATION SUBJECT
Thomas Flohr, Uehlfeld, Germany, assignor to Siemens Aktiengesellschaft, Munich, Germany
Continuation-in-part of Ser. No. 226,335, Apr. 12, 1994, abandoned. This application Sep. 25, 1995, Ser. No. 533,334
Claims priority, application Germany, May 7, 1993, 43 15 279.1
Int. Cl.[6] G06K *9/00*
U.S. Cl. 382—131 **1 Claim**

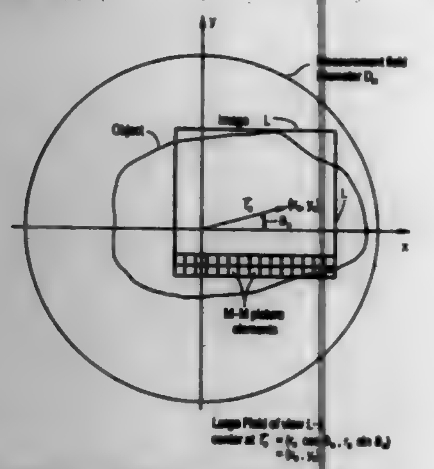

1. A computer tomography apparatus comprising:
means for irradiating an examination subject disposed in an examination volume from different directions with penetrating radiation;
means for detecting said penetrating radiation from said different directions attenuated by said subject and for generating electrical signals corresponding to the attenuated radiation comprising a data set in parallel beam geometry; and
computer means for constructing an image of an arbitrary excerpt of the overall examination volume by Fourier reconstruction, including means for one-dimensional Fourier transform of the input data in parallel geometry $f_{lk}= f(\rho_k, \vartheta_l)$ with respect to ρ_k, resulting in values $\hat{f}_l\,(m\Delta\rho)$ on a polar grid $|\vec{\rho}_m| = m\Delta\rho$ and arc $\vec{\rho}=\vartheta_l$ in the frequency domain, means for multiplying the product $\hat{f}_l\,(m\Delta\rho)\,K(m\Delta\rho)$ by a phase factor $\exp(-2\pi i\vec{\rho}\cdot\vec{r}_0)=\exp(-2\pi i m\Delta\rho r_0 \cos(\vartheta_l-\vartheta_0))$, wherein $\vec{r}_0=(r_0\cos\vartheta_0, r_0\sin\vartheta_0)=(x_0,y_0)$ is the position of the center point of the desired image field in the spatial domain, means for calculating values on a rectangular grid with grid dimension η in the frequency domain by weighting the values on the polar grid with a function $\hat{G}$, whereby the grid dimension η in the frequency space may be arbitrarily chosen for generating an excerpt $|x-x_0|\leq L=\frac{1}{2}\eta$ and $|y-y_0|\leq L=\frac{1}{2}\eta$ of said examination volume, means for periodically repeating said spectral values on the rectangular grid in Cartesian Coordinates with a period length M/L, wherein L is the sidelength of the image field and M·M is the number of picture elements, resulting in a plurality of contributions falling into the basic period, means for summing said plurality of contributions in the basic period for selecting the function $K(m\Delta\rho)$ such that $\hat{f}_l\,(m\Delta\rho)\,K(m\Delta\rho)\geq 0$ for $|m\Delta\rho|\geq M/2L$ is valid, and means for two-dimensional Fourier transform of the basic period of the spectrum in Cartesian Coordinates back to the spatial domain to produce the image.

5,701,361
ADJUSTING ILLUMINATION FOR IMAGE LIFT
Ted Concannon, Farmington Hills; John Vala, Plymouth, and Gerald Banks, Ann Arbor, all of Mich., assignors to Unisys Corp, Blue Bell, Pa.
Division of Ser. No. 89,817, Jul. 12, 1993, Pat. No. 5,513,274, which is a division of Ser. No. 874,876, Apr. 28, 1992, Pat. No. 5,259,043, which is a division of Ser. No. 419,355, Oct. 10, 1989, Pat. No. 5,155,776. This application Apr. 22, 1996, Ser. No. 636,078
Int. Cl.[6] G06K *9/00*
U.S. Cl. 382—138 **2 Claims**

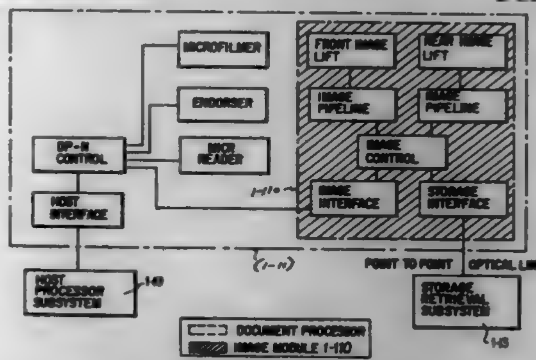

DOCUMENT PROCESSOR SUBSYSTEM FUNCTIONS

1. A method for lifting the image of passing documents including: providing source means of stable-wavelength-output illumination, providing CCPD camera means selected to exhibit a prescribed spectral response plus associated filter means, disposed upstream of the camera means and adapted to shift its received image-light spectrum to be closer to that which is optimal for the camera means;
providing a pair of imaging-sites adapted to receive said illumination and project document-images to said camera means;
providing heat-trap means to remove IR from said illumination;
providing split-means to split each illumination beam and present it as two sub-beams disposed symmetrically about each said site via slit-means; and
intercepting each said beam with focus means adapted to change the focal point thereof; and providing a fibre-optic array for each beam, while adapting each array to exhibit a relatively circular entry-aperture of prescribed diameter and an exit-face configured to illuminate its respective slit means and site, while arranging and adapting said focus means to vary the focal-point of its beam and so change beam-diameter at said entry-face sufficient to spread its beam well beyond the aperture and so controllably reduce the amount of the beam entering its array.

5,701,362
WIRE BREAKAGE DETECTING METHOD
Hiromi Koga, Chikugo, Japan, assignor to Rohm Co., Ltd., Kyoto, Japan
Filed Jul. 6, 1995, Ser. No. 498,838
Claims priority, application Japan, Jul. 8, 1994, 6-157462
Int. Cl.[6] G06K *9/00;* **H04N** *7/18;9/47*
U.S. Cl. 382—149 **4 Claims**

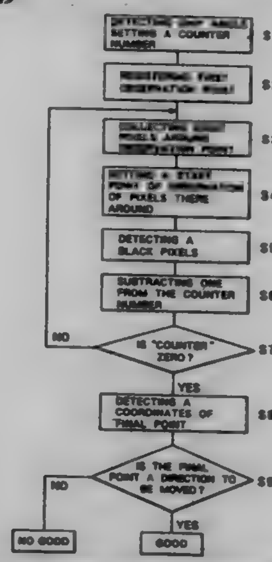

1. A wire breakage detection method for detecting breakage of a wire bonded on a chip of an electronic component by image processing comprising the steps of:
a) detecting a chip angle and setting a counter number according to a wire length;
b) setting first observation point;
c) collecting plural pixels around said observation point;
d) setting a start point of observation of the plural pixels around said observation point;
e) observing pixels sequentially in a specific direction around said observation point starting at said start point;
f) determining whether said pixels are white or black;
g) subtracting one from the counter number when a black pixel is determined;
h) determining if the counter is zero (0);
i) repeating the above steps starting with c) if the counter is not zero (0);
j) if the counter is zero (0), detecting coordinates of the final observation point;
k) if the first and final observation points coincide, outputting an indication that no wire is broken; and
l) if the first and final observation points do not coincide, outputting an indication that a wire is broken.

5,701,363
BINARY TO MULTI-VALUE CONVERSION APPARATUS FOR IMPROVED IMAGE REDUCTION AND ENLARGEMENT
Yoshiaki Hanyuh, Soka, Japan, assignor to Ricoh Company, Ltd., Tokyo, Japan
Filed Jun. 17, 1994, Ser. No. 262,058
Claims priority, application Japan, Jun. 18, 1993, 5-147819
Int. Cl.[6] H04N *1/409*
U.S. Cl. 382—174 **8 Claims**

1. An image processing apparatus which inputs binary image data and outputs multi-value data, said apparatus comprising:

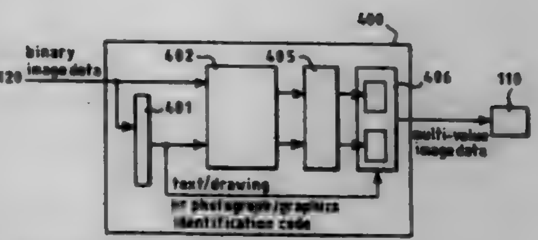

an input device which inputs binary image data;
a divider which divides the input binary image data;
a divider which divides the input binary image data into binary text/drawing data and binary photograph/graphics data, the divider further including a binary data identifier that identifies the input binary image data and outputs a first code for text/drawing and a second code for photograph/graphics data, the input binary image data being divided into the binary text/drawing data and the binary photograph/graphics data in accordance with said first and second codes;
a multi-value processor in which the binary text/drawing data is converted to multi-value text/drawing data by a first filter which interpolates an edge of an image and the binary photograph/graphic data is converted to multi-value photograph/graphics data by a filter which smooths an image;
a mixer which mixes the multi-value text/drawing data and the multi-value photograph/graphic data together into multi-value data; and
an output device which outputs the multi-value data.

5,701,364
IMAGE PROCESSING APPARATUS
Hiroki Kanno, Yokohama, Japan, assignor to Kabushiki Kaisha Toshiba, Kawasaki, Japan
Filed Mar. 16, 1995, Ser. No. 405,295
Claims priority, application Japan, Mar. 24, 1994, 6-053694
Int. Cl.[6] G06K *9/34;* **H04N** *1/419*
U.S. Cl. 382—176 **12 Claims**

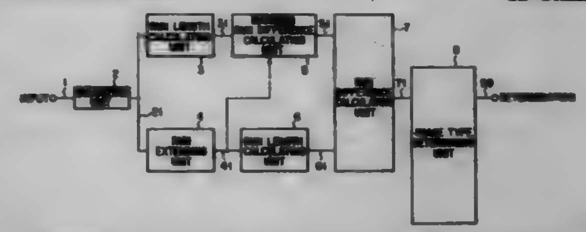

1. An image processing apparatus for determining an image type of each area in an image, comprising:
binarizing means for binarizing an input image signal to provide binary image data consisting of first and second values;
run length calculating means for calculating, on the basis of the binary image data provided by said binarizing means, a length of a run representing a continuation of the binary image data having the first value;
run extension means for replacing a pixel having the second value with a pixel having the first value with respect to the binary image data provided by said binarizing means to extend the run so as to provide an extended run;
maximum run length calculating means for calculating a maximum run length of run lengths calculated by said run length calculating means within a range of the extended run provided from said run extension means;
extended run length calculating means for calculating a length of the extended run provided from said run extension means; and
determining means for determining an image type of the input image signal on the basis of the extended run length calculated by said extended run length calculating means and the maximum run length calculated by said maximum run length calculating means.

5,701,365

SUBPIXEL CHARACTER POSITIONING WITH ANTIALIASING WITH GREY MASKING TECHNIQUES

Steven J. Harrington, and R. Victor Klassen, both of Webster, N.Y., assignors to Xerox Corporation, Stamford, Conn.

Filed Jun. 21, 1996, Ser. No. 667,692

Int. Cl.[6] H04N *1/387;* G06T *11/00*

U.S. Cl. 382—212 22 Claims

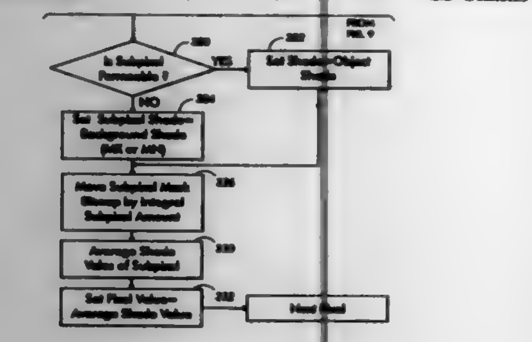

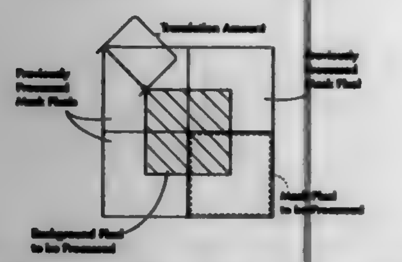

15. A method of translating antialiased edges expressed by an object mask with improved edge rendition, said edges including pixels and the method including:
1) providing an object mask including pixels having contone values employing a number of gray levels G greater than 2;
2) providing a high resolution version of the pixels of interest in the mask, including a plurality of subpixels;
3) assigning a binary mask value to each subpixel as a function of a position thereof within the pixel of interest and the values of any pixels neighboring the pixel of interest;
4) accumulating high resolution versions of pixels in the scope of the desired translation about the pixel of interest;
5) varying the mask values of the subpixels to translate the edge position within the pixel of interest;
6) combining the subpixel mask values in the pixel of interest to determine a final output value for the pixel of interest.

5,701,366

HALFTONING WITH GRADIENT-BASED SELECTION OF DITHER MATRICES

Victor Ostromoukhov, Lausanne, Switzerland, and Smadar Nehab, Palo Alto, Calif., assignors to Canon Information Systems, Inc., Costa Mesa, Calif.

Filed Sep. 4, 1996, Ser. No. 707,753

Int. Cl.[6] H04N *1/405*

U.S. Cl. 382—237 25 Claims

1. A method for obtaining halftone image data from corresponding gray scale image data, the gray scale image data being representative of pixels in an image and arbitrarily including values representative of both highlights and midtones for the image, said method comprising the steps of:

calculating a local tonality gradient of gray scale image data for a target pixel, the tonality gradient being calculated based on a comparison between at least the gray scale image data for the target pixel and gray scale image data for a pixel adjacent the target pixel;

selecting one dither matrix from among plural dither matrices based on the calculated tonality gradient, each of the plural dither matrices containing threshold values which differ from others of the plural dither matrices; and

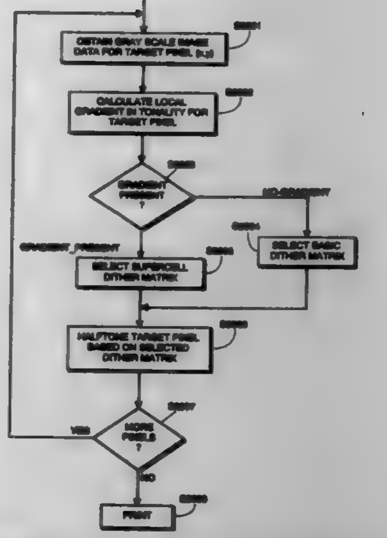

thresholding the gray scale image data for the target pixel using the selected dither matrix so as to obtain halftone image data for the target pixel.

5,701,367

IMAGE DATA CODING SYSTEM FOR CONTROLLING AMOUNTS OF CODE DATA FOR CHARACTER IMAGE AND NATURAL IMAGE REGIONS

Yutaka Koshi; Shunichi Kimura, and Koh Kamizawa, all of Kanagawa, Japan, assignors to Fuji Xerox Co., LTD., Tokyo, Japan

Filed Oct. 20, 1994, Ser. No. 325,144

Claims priority, application Japan, Oct. 26, 1993, 5-267635

Int. Cl.[6] G06K *9/36;9/46*

U.S. Cl. 382—239 4 Claims

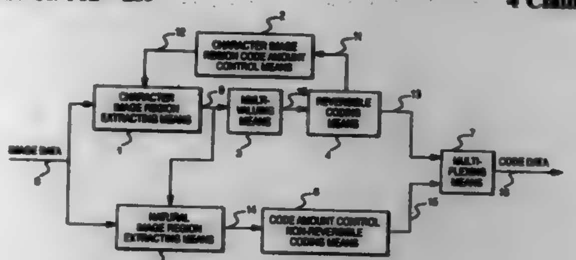

1. An image coding device comprising:

first means for extracting a character image region having a variable size from input image data;

second means for controlling the size of the character image region to be extracted by said first means, so that the code amount of said image data of the character image region is to be equal to a first preset target code amount;

third means for multivaluing image data of said character image region extracted by said first means;

fourth means for reversible coding image data of said character image region multivalued by said third means;

fifth means for subtracting said image data of said character image region from said input image data to generate image data of a non-character image region; and

sixth means for non-reversible coding said image data of said non-character image region generated from said fifth means, a code data amount of said image data of said non-character image region being equal to a second preset target code amount.

5,701,368

APPARATUS FOR ENCODING AN IMAGE SIGNAL HAVING A STILL OBJECT

Hae-Mook Jung, Seoul, Rep. of Korea, assignor to Daewoo Electronics Co., Ltd., Seoul, Rep. of Korea

Filed Jul. 31, 1995, Ser. No. 509,260

Claims priority, application Rep. of Korea, Mar. 20, 1995, 95-5861

Int. Cl.[6] G06K *9/46;9/36*

U.S. Cl. 382—239 9 Claims

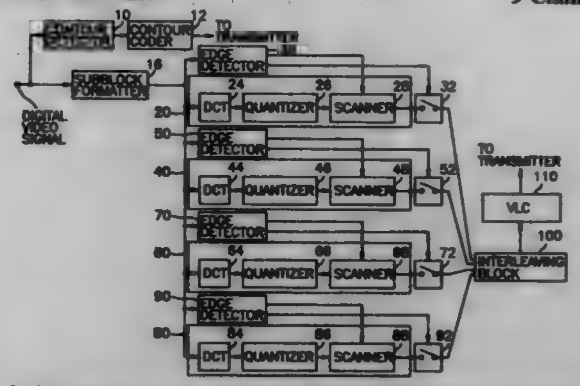

1. An apparatus for encoding a digital video signal of an image having a still object therein, wherein the image signal is divided into a number of pixel blocks of an identical size and pixels lying outside of the object are masked with a zero value, the apparatus comprising:

a subblock formatter for subdividing each of the blocks into 4^N subblocks, wherein N is 1 or 2;

encoding means having 4^N encoders, each of said encoders for encoding each one of said 4^N subblocks to thereby produce a block of encoded data;

edge detecting means having 4^N edge detectors, each of said edge detectors for detecting an edge in the subblock to produce an edge detection signal and for determining a pattern of the detected edge to produce an edge pattern identification signal, wherein the edge in the subblock is categorized into one of a plurality of edge patterns including a starboard slant edge, a larboard slant edge, a horizontal slant edge, a vertical slant edge and a plain picture without an edge;

scanning means having 4^N scanners, each of the scanners connected to its corresponding encoder for adaptively scanning each block of encoded data in accordance with the edge identification signal to produce a series of scanned data;

means for interleaving each of the scanned data from each of said scanners to produce a stream of interleaved data; and

a variable length coder for coding a stream of interleaved data to produce a variable length coded signal.

5,701,369

FRACTAL IMAGE COMPRESSION DEVICE AND METHOD

Yong-Ho Moon; Jae-Ho Kim, both of Busan, and Dong-Seek Park, Daegu, all of Rep. of Korea, assignors to SamSung Electronics Co., Ltd., Suwon, Rep. of Korea

Filed Aug. 31, 1995, Ser. No. 521,809

Claims priority, application Rep. of Korea, Apr. 19, 1995, 9252/1995

Int. Cl.[6] G06K *9/36*

U.S. Cl. 382—249 36 Claims

1. A fractal image compression method, comprising the steps of:

dividing image data representative of a composite image into a plurality of range blocks each having a first predetermined size;

designating, for each one of said plurality of range blocks, a plurality of domain blocks each having a second predetermined size larger than said first predetermined size, each one of said plurality of domain blocks having a subportion that includes an entire portion of a corresponding range block;

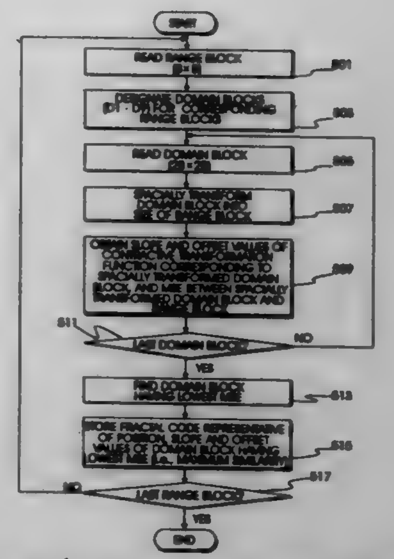

calculating, for each one of said plurality of range blocks, coefficients of a contractive transformation function to match each one of said plurality of domain blocks to said corresponding range block;

calculating, for each one of said plurality of range blocks, errors between each one of said plurality of domain blocks and said corresponding range block;

selecting, for each one of said plurality of range blocks, one of said plurality of domain blocks having a minimum error as a maximum similarity block for said corresponding range block; and

storing, for each one of said plurality of range blocks, a location index and said coefficients of said contractive transformation function for said one of said plurality of domain blocks selected as said maximum similarity block for said corresponding range block.

5,701,370

OPTICAL FIBER SENSORS FOR MONITORING JOINT ARTICULATION AND CHEST EXPANSION OF A HUMAN BODY

Jeffrey D. Muhs, Lenoir City, and Stephen W. Allison, Knoxville, both of Tenn., assignors to Lockheed Martin Energy Systems, Inc., Oak Ridge, Tenn.

Continuation of Ser. No. 514,454, Aug. 11, 1995, abandoned. This application Dec. 17, 1996, Ser. No. 767,697

Int. Cl.[6] G02B *6/00*

U.S. Cl. 385—13 18 Claims

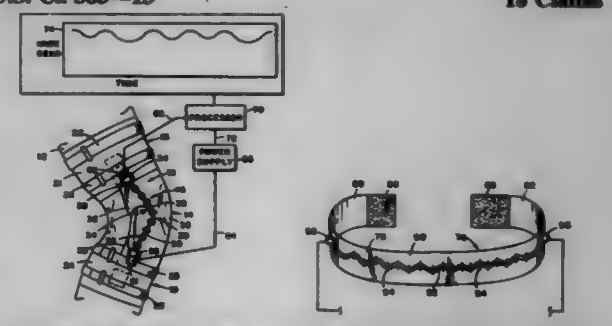

1. A fiber-optic device for monitoring the extent of movement of a component of a human body, comprising base means having first and second end portions and a moveable central portion adapted to at least substantially span a selected movable component of a human body, securing means for fastening the first and second end portions of the base means to selected portions of the human body to maintain the base means in a fixed position with respect to said selected portions of a human body with the central portion of the base means at least substantially spanning the selected component of the human body for conjunctive movement therewith, optical

fiber means formed of an elastomeric material and having first and second end regions and a central region therebetween, first attaching means for fixedly attaching the first and second end regions of the optical fiber means to the first and second end portions of the base means with the central region of the optical fiber means extending between the fixedly attached first and second end portions of the optical fiber means being positioned contiguous to the movable central portion of the base means and at least substantially spanning the selected body component, second attaching means for securing the central region of the optical fiber means to the movable central portion of the base means for effecting conjunctive movement therewith upon movement of the selected body portion to deform the central region of the optical fiber means with the extent of the deformation of the central region of the optical fiber means being dependent upon the extent of conjunctive movement of the central region of the optical fiber means with the central portion of the base means, light transmitting means coupled to one of said end regions of the optical fiber means for transmitting light through the optical fiber means, light receiving means coupled to one of said end regions of the optical fiber means for receiving light transmitted through the optical fiber means with the amount of light being received by the light receiving means being proportional to the extent of deformation of the central region of the optical fiber means and providing a signal indicative of the extent of each movement of the selected body portion from a selected position.

5,701,371

TUNABLE OPTICAL FILTER

Osamu Ishida, Yokohama, Japan, assignor to Nippon Telegraph and Telephone Corporation, Tokyo, Japan

Filed Oct. 27, 1995, Ser. No. 548,984

Claims priority, application Japan, Oct. 31, 1994, 6-267812

Int. Cl.⁶ G02B 6/26

U.S. Cl. 385—17 **3 Claims**

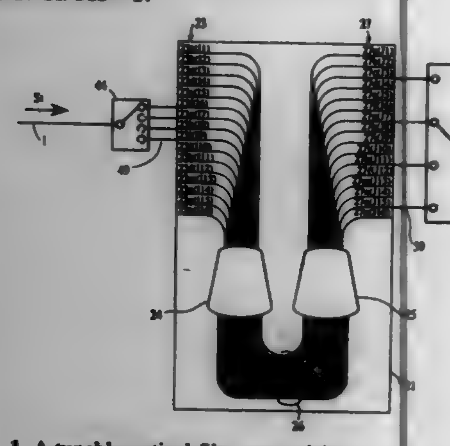

1. A tunable optical filter comprising:

an arrayed-waveguide grating router having an input waveguide group composed of M·N waveguides and an output waveguide group composed of M·N waveguides, wherein M and N are each natural numbers greater than or equal to two;

an input optical path;

an optical path connection means for connecting said input optical path with one of M waveguides labeled x_j in said input waveguide group wherein j=1, 2, . . . , M, and x_j is defined by the following equation:

$$x_j = x + \sum_{i=0}^{r-1} (a_i - 1)p_i q_{i+1},\ 1 \leq a_i \leq \frac{p_{i+1}}{p_i}$$

wherein x and a_i are natural numbers and i=0, 1, . . . , r−1;

an optical path selection means for selecting one of N waveguides labeled y_j in said output waveguide group wherein j=1, 2, . . . , N, and y_j is defined by the following equation:

$$y_j = y + \sum_{i=0}^{r} (b_i - 1)p_i q_i,\ 1 \leq b_i \leq \frac{q_{i+1}}{q_i}$$

wherein y and b_i are natural numbers and i=0, 1, . . . , r; and numerical series p_0, p_1, . . . , p_r is composed of r+1 different factors of M such that p_0=1, P_r=M, p_k<p_{k+1} and P_k is a factor of p_{k+1} and numerical series q_0, q_1, . . . , q_{r+1} is composed of r+2 factors of N such that q_0=1, q_{r+1}=N, q_k ≦q_{k+1} and q_k is a factor of q_{k+1}, wherein k is either zero or a natural number and r is a natural number.

5,701,372

HYBRID ARCHITECTURE FOR INTEGRATED OPTIC SWITCHABLE TIME DELAY LINES AND METHOD OF FABRICATING SAME

Gregory A. Magel, Dallas, Tex., and Robert M. Boysel, Hopewell Junction, N.Y., assignors to Texas Instruments Incorporated, Dallas, Tex.

Filed Oct. 22, 1996, Ser. No. 735,293

Int. Cl.⁶ G02B 6/28

U.S. Cl. 385—24 **16 Claims**

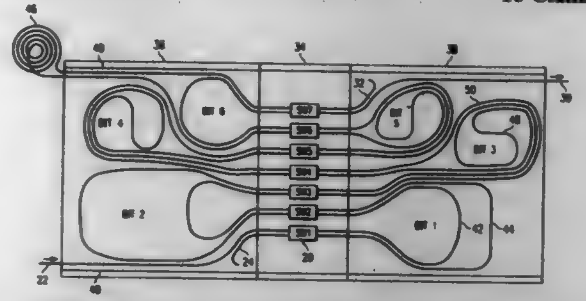

1. A hybrid integrated optical time delay circuit comprising:

(a) a first delay loop chip containing at least one delay loop and at least one bypass loop;

(b) a second delay loop chip containing at least one delay loop and at least one bypass loop; and

(c) a switch chip disposed between said first and second delay loop chips containing at least one switch; and

(d) means for coupling optical signals from said first and second delay loop chips to said switch;

wherein an optical signal can be switched between said delay loops to provide an variable delay.

11. A method for fabricating a hybrid integrated optical time delay circuit comprising:

(a) making at least one delay loop chip containing at least one delay loops and bypass loops;

(b) making a switch chip containing at least one switch;

(c) interfacing optical signals from said delay loop chip to said switches; and

(c) interfacing at least one delay loop chip with a switch chip;

wherein an optical signal can be switched between said delay loops to provide a variable delay.

5,701,373

METHOD FOR IMPROVING THE COUPLING EFFICIENCY OF ELLIPTICAL LIGHT BEAMS INTO OPTICAL WAVEGUIDES

Tanya Oleskevich, Victoria, Canada, assignor to SDL, Inc., San Jose, Calif.

Filed Oct. 12, 1995, Ser. No. 542,017

Int. Cl.⁶ G02B 6/32

U.S. Cl. 385—33 **56 Claims**

1. An optical coupling system comprising:

a light source;

a lens system;

a circularly symmetric optical waveguide having an input end facet,

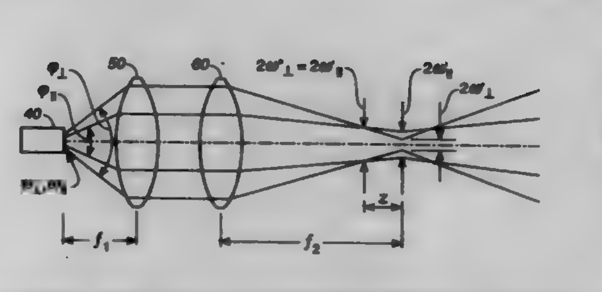

said light source emits a substantially elliptical beam having a major axis and a minor axis and which is more highly divergent in a first plane perpendicular to said major axis than in a second plane parallel to said major axis;

said lens system having at least one rotationally symmetric bulk optic lens; and

a concave-shaped cylindrical microlens formed transversely across and in said end facet.

5,701,374

INTEGRATED OPTICAL MODULE INCLUDING A WAVEGUIDE AND A PHOTORECEPTION DEVICE

Masao Makiuchi, Kawasaki, Japan, assignor to Fujitsu Limited, Japan

Filed Nov. 9, 1995, Ser. No. 552,474

Claims priority, application Japan, May 12, 1995, 7-114629

Int. Cl.⁶ G02B 00/00

U.S. Cl. 385—49 **20 Claims**

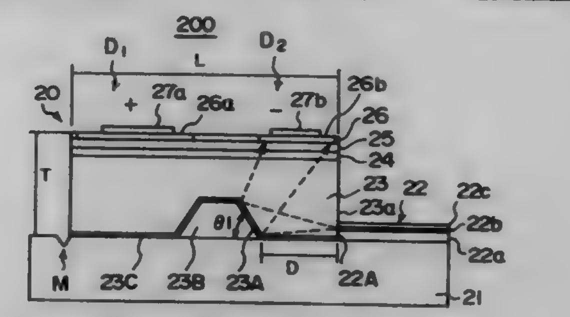

1. An optical module, comprising:

a support substrate;

a planar optical waveguide integrally provided on said support substrate in intimate contact therewith for guiding an optical beam therethrough, said planar optical waveguide including an optical waveguide layer arranged parallel to said support substrate;

a photoreception device provided on said support substrate, said photoreception device including a photodetection area that responds to an incoming optical beam;

optical path conversion means formed integrally with said photodetection device for converting an optical path of said planar optical beam guided through said optical waveguide and emitted therefrom, from a first optical path to a second optical path that leads to said photodetection area of said photoreception device, said second optical path lying entirely within said photoreception device;

said planar optical waveguide having an edge surface for emitting said optical beam guided through said planar optical waveguide, along said first optical path;

said photoreception device being provided on said support substrate so as to be impinged upon by said optical beam emitted from said edge surface of said planar optical waveguide;

said optical path conversion means being formed on said photoreception device as a part thereof, such that said optical beam emitted from said edge surface of said planar optical waveguide impinges upon said photodetection area of said photoreception device.

5,701,375

METHOD AND SYSTEM FOR ALIGNING OF OPTICAL ELEMENTS

Gary S. Duck, Nepean; Yihao Cheng, Kanata, and Keichi Abe, Ottawa, all of Canada, assignors to JDS Fitel Inc., Nepean, Canada

Continuation-in-part of Ser. No. 462,149, Jun. 5, 1995. This application Apr. 2, 1996, Ser. No. 626,610

Int. Cl.⁶ G02B 6/38

U.S. Cl. 385—74 **10 Claims**

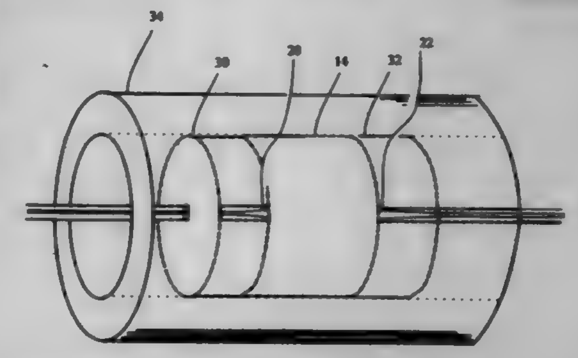

1. An alignment system for aligning optical components comprising:

a first optical fiber having an end that has an expanded mode field diameter, said mode field diameter being substantially larger than the mode field diameter of another portion of the fiber, said first optical fiber end being held in an optical fiber tube having a predetermined outer diameter;

a lens having a predetermined outer diameter;

and an optical element having a predetermined outer diameter;

an alignment sleeve having an opening that tightly accepts and receives the optical fiber tube, the lens, and the optical element.

5,701,376

POLARIZED-WAVE-DISPERSION- PREVENTIVE OPTICAL FIBER AND ITS MANUFACTURING METHOD

Masataka Shirasaki, Kanagawa, Japan, assignor to Fujitsu Limited, Kanagawa, Japan

Filed May 24, 1996, Ser. No. 655,315

Claims priority, application Japan, Jul. 26, 1995, 7-190536

Int. Cl.⁶ G02B 6/02;6/16

U.S. Cl. 385—123 **20 Claims**

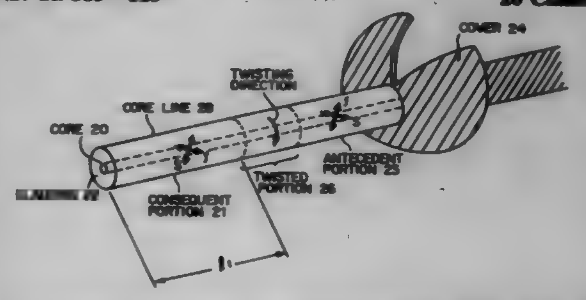

1. An optical fiber having a residual birefringence causing polarized wave dispersion by randomly affecting propagating light, comprising:

a core line for propagating light; and

a cover formed over said core line,

said optical fiber being twisted at least on said core line in a predetermined range at given intervals and thereby reducing said polarized wave dispersion.

5,701,377

PLASTIC LIGHT TRANSMITTING BODY, ITS PRODUCTION METHODS AND APPARATUS

Atsuko Ichikawa; Satoshi Honda; Takayuki Katoh, and Akira Ishiuka, all of Hino, Japan, assignors to Konica Corporation, Tokyo, Japan

Filed Sep. 25, 1995, Ser. No. 533,435

Claims priority, application Japan, Sep. 27, 1994, 6-231450

Int. Cl.[6] G02B *6/02*

U.S. Cl. 385—124 **21 Claims**

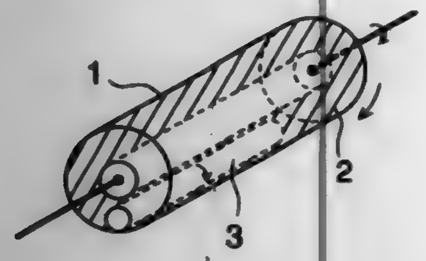

3. A light transmitting plastic member having a desired optical distribution, comprising:

a diffused base material manufactured from a gelled base material, wherein the gelled base material is partially polymerized, shaped so as to have a rotation axis, placed in a monomer having an optical characteristics different from that of the gelled base material; and rotated around the rotation axis thereof in the monomer so that the monomer is diffused into the gelled base material while the gelled base material is rotated.

5,701,378

OPTICAL STRUCTURES WITH TWO OPTICAL GUIDANCE PATHS

Eleanor Joan Tarbox, Southampton, England, assignor to Pirelli General plc, England

Filed Jun. 28, 1996, Ser. No. 671,650

Claims priority, application United Kingdom, Jul. 4, 1995, 9513582

Int. Cl.[6] G02B *6/22*

U.S. Cl. 385—126 **24 Claims**

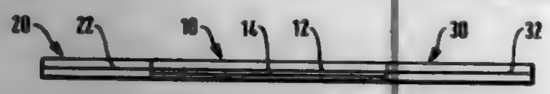

1. A method of manufacturing an optical structure having two optical guidance paths between which coupling occurs in a band about one predetermined wavelength: said method comprising providing an optical structure having two optical guidance paths with respective propagation constants which vary differently with wavelength and coincide at one given wavelength arranged such that coupling occurs between said optical guidance paths in a band about said one given wavelength, said structure including a radiation responsive refractive index changing dopant substantially throughout the length of at least one of said guidance paths over at least a region of the cross-section thereof; and subjecting the or at least one of the guidance paths including said dopant to radiation to change the propagation constant thereof until said one given wavelength equals said one predetermined wavelength.

5,701,379

WAVEGUIDE TYPE SEMICONDUCTOR PHOTODETECTING DEVICE AND FABRICATION PROCESS THEREFOR

Takeshi Takeuchi, Tokyo, Japan, assignor to NEC Corporation, Tokyo, Japan

Filed Nov. 27, 1996, Ser. No. 757,999

Claims priority, application Japan, Nov. 30, 1995, 7-334298

Int. Cl.[6] G02B *6/10*

U.S. Cl. 385—131 **4 Claims**

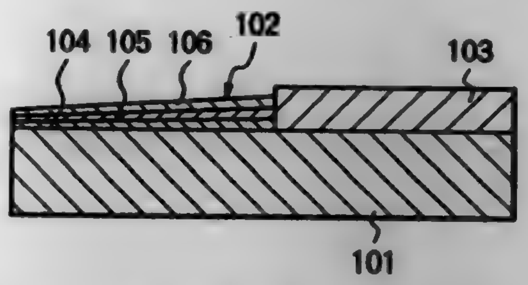

1. A waveguide type semiconductor photodetecting device comprising:

a semiconductor substrate;

a photodetecting element;

a passive waveguide optically coupled with said photodetecting element and having a waveguide layer gradually narrowing a width and gradually increasing a layer thickness and a refraction index from light incident side to said photodetecting element, which passive waveguide is integrated with said photodetecting element on said semiconductor substrate.

5,701,380

FIBER OPTIC MODULE FOR HIGH DENSITY SUPPLY OF PATCHING AND SPLICING

Glen M. Larson, Spokane, and Terry R. Mayberry, Veradale, both of Wash., assignors to Telect, Inc., Liberty Lake, Wash.

Filed Jun. 24, 1996, Ser. No. 669,083

Int. Cl.[6] G02B *6/36*

U.S. Cl. 385—134 **14 Claims**

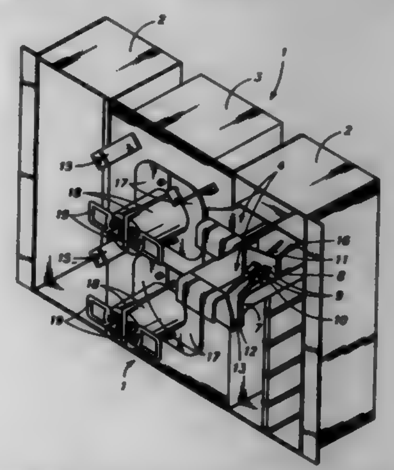

1. A modular fiber optic cable management panel, comprising:

a. a tray module housing;

b. a plurality of tray modules in slidable relation to the tray module housing, each tray module including an integral front tray module opening for routing one to four fiber optic cables and an integral rear tray module opening for routing one to four fiber optic cables, wherein the front tray module and the rear tray module prevent the fibers from being bent in an arc having a radius of curvature that is less than a prescribed value; and

c. one to four fiber optic adapters mounted on at least one of the tray modules.

5,701,381

MOUNTING ARRANGEMENT FOR A PROBE TIP OF A SCANNING FORCE OR TUNNELING MICROSCOPE

Frank Saurenbach, Herzogenrath, and Hans-Achim Fuss, Jülich, both of Germany, assignors to Forschungszentrum Jülich GmbH, Jülich, Germany

Filed May 2, 1996, Ser. No. 641,638

Claims priority, application Germany, Nov. 12, 1993, 43 38 688.1

Int. Cl.[6] C02B *6/36*

U.S. Cl. 385—139 **7 Claims**

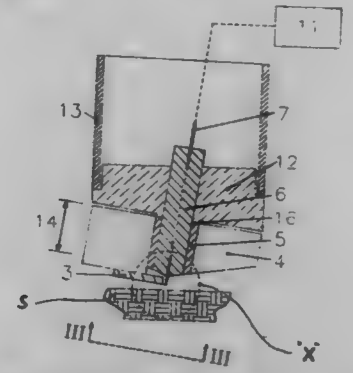

1. A mounting arrangement for a probe tip of a scanning force microscope or a SNOM wherein movement of the probe tip while scanning a sample surface is interferometrically determined, said arrangement comprising: a ferrule mounted on a ferrule holder, an optical light conductor extending through said ferrule and having an end with an end face projecting from said ferrule, a mounting structure disposed on said ferrule and including means for engagement with said ferrule and said ferrule holder so as to locate said probe tip in front of said light conductor end face at a predetermined distance therefrom.

5,701,382

FIBER OPTIC ATTENUATOR

Igor Grois, Northbrook; Ilya Makhlin, Wheeling; Grigoriy Bunin, Skokie, and Michael J. Pescetto, Plainfield, all of Ill., assignors to Molex Incorporated, Lisle, Ill.

Filed Jul. 5, 1996, Ser. No. 676,028

Int. Cl.[6] G02B *6/38*

U.S. Cl. 385—140 **11 Claims**

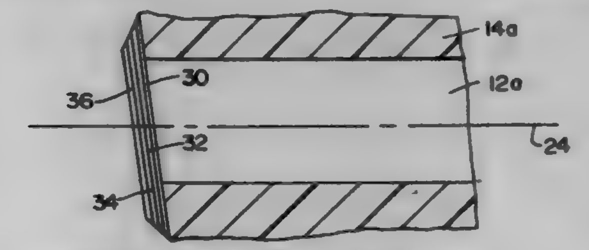

1. An optical fiber attenuator, comprising:

an optical fiber section having an end;

a first layer of substantially transparent anti-reflective material located on said end of the optical fiber section;

a second layer of light attenuating material located on the first layer; and

a third layer of substantially transparent anti-reflective material located on the second layer.

5,701,383

VIDEO TIME-SHIFTING APPARATUS

James Russo, Ann Arbor, Mich., and Michael R. Levine, Boca Raton, Fla., assignors to Gemstar Development Corporation, Pasadena, Calif.

Continuation-in-part of Ser. No. 247,129, May 20, 1994, abandoned. This application Feb. 14, 1995, Ser. No. 388,345

Int. Cl.[6] H04N *5/76*

U.S. Cl. 386—46 **19 Claims**

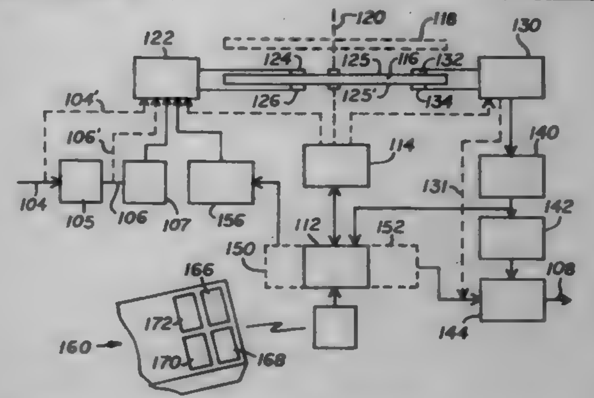

1. Video time-shifting apparatus, comprising:

an input to receive a video program from a source of such programs;

a video output to view the program on an associated display device;

video record/playback means, including:

a storage medium having a plurality of circular recording surfaces, each with a spiral recording track having start-of-track and end-of-track positions,

a plurality of write heads to record information representative of the video program as the program is received, each write head being associated with a different recording surface and associated spiral recording track,

means for moving the write heads in controlled fashion relative to their respective recording surfaces and tracks, with the apparatus automatically terminating recording with respect to a given write head upon reaching one of the start-of-track or end-of-track positions, while immediately initiating recording with a different write head, so as to effectively link the different spiral recording tracks into a continuous track for recording and playback purposes, and

a read head in communication with the video output which is capable of accessing the continuous recording track asynchronously from the write heads;

a memory for storing information relating to points in the program; and

a user control in communication with the video record/playback means and the memory, the user control being operative to:

cause the memory to store information relating to a particular point in the program as it is received and begin playback from that point after a delay, thereby outputting a time-shifted version of the program which simulates a PAUSE/RESUME function.

5,701,384

DIFFERENT TRACK SEARCHING METHOD FOR VIDEO COMPACT DISC RECORDING/REPRODUCING SYSTEM AND APPARATUS THEREOF

Chan-Sou Park, Ch'ungch'ongnam-Do, Rep. of Korea, assignor to Daewoo Electronics Co., Ltd., Seoul, Rep. of Korea

Filed Dec. 27, 1995, Ser. No. 580,442

Claims priority, application Rep. of Korea, Dec. 30, 1994, 94-39387

Int. Cl.[6] H04N *5/781*

U.S. Cl. 386—70 **3 Claims**

1. A method for searching a different track in a video compact disc recording/reproducing system using an optical pickup, said method comprising the steps of:

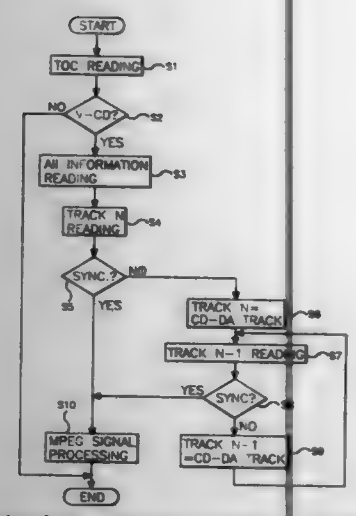

reading table-of-contents data recorded in a lead-in area of an optical disc which is loaded in the video compact disc recording/reproducing system;

deciding whether or not the optical disc is a video compact disc based on the read table-of-content data on the video compact disc, to read out information of video compact disc based on a track number and a track reproducing time information contained in the table-of-content data and to move the optical pickup to a final track in the video compact disc and read out data recorded on the final track, when the optical disc is the video compact disc; and

deciding whether or not a CD-ROM XA synchronous signal for the video compact disc is detected in the read-out data from the final track, when the CD-ROM XA synchronous signal is detected, the final track is decided as a track on which MPEG audio/video signal are recorded by a MPEG processing and a processing audio/video signal against the video compact disc, and when the CD-ROM XA synchronous signal is not detected, the final track is decided as the different track so that the optical pickup is moved to an inside track of the final track to read out data recorded on the inside track; and

deciding whether or not a CD-ROM XA synchronous signal for the video compact disc is detected in the read-out data from the inside track, when the CD-ROM XA synchronous signal is detected, the inside track is decided as a track on which MPEG audio/video signal are recorded by a MPEG processing and a processing audio/video signal against the video compact disc, and when the CD-ROM XA synchronous signal is not detected, the inside track is decided as the different track so that the optical pickup is moved to an inside track of the final track to return to the step reading out data recorded on the inside track.

5,701,385

APPARATUS FOR REPLAYING A RECORDING MEDIUM HAVING MEANS FOR DISPLAYING THE CONTENTS OF THE RECORDING MEDIUM AS GRAPHICS IMAGES WHICH INCLUDE A SERIES OF INTRA-PICTURES

Akira Katsuyama; Kenji Tomizawa; Shuichi Nagano, and Takashi Koya, all of Kanagawa, Japan, assignors to Sony Corporation, Tokyo, Japan

Filed Jul. 3, 1995, Ser. No. 498,018

Int. Cl.[6] H04N *5/91;7/04;5/917;5/781*

U.S. Cl. 386—106 **14 Claims**

1. An apparatus for replaying a disc whose contents include video data or audio data selectively recorded on said disc and having discrimination data thereon for indicating a disc type, said apparatus comprising:

receiving means for substantially concurrently receiving a plurality of discs including said disc;

reading means for selectively reading said video or audio data and said discrimination data sequentially from said discs; and

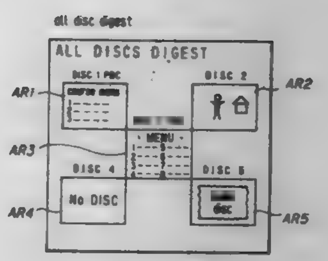

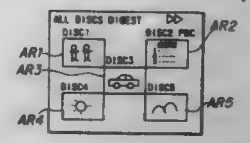

display producing means having a display screen for substantially concurrently providing, based on said video or audio data sequentially read from each disc in said plurality of discs, a plurality of graphics images including a series of Intra-pictures at corresponding predetermined display positions on said screen to indicate the contents of each disc.

5,701,386

RECORDING AND REPRODUCING APPARATUS AND METHOD FOR COMPRESSED VIDEO SIGNAL

Akira Yoneyama, Higashiosaka, Japan, assignor to Matsushita Electric Industrial Co., Ltd., Osaka-fu, Japan

Filed Mar. 7, 1995, Ser. No. 399,588

Claims priority, application Japan, Mar. 14, 1994, 6-042498

Int. Cl.[6] H04N *5/917;5/91*

U.S. Cl. 386—909 **16 Claims**

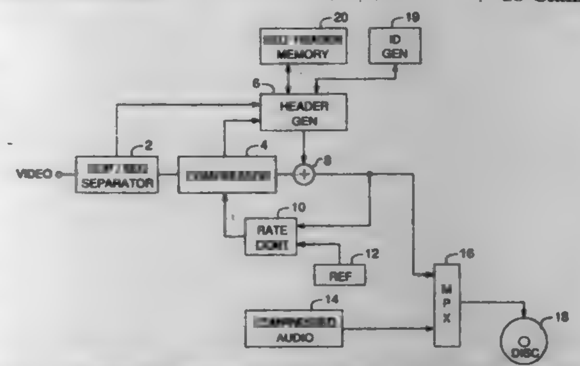

1. A recording apparatus for recording a compressed video signal on a disc, said compressed video signal being divided into a plurality of sequences with a sequence header inserted at a beginning of each sequence, each sequence being divided into a plurality of GOPs with a GOP header inserted at a beginning of each GOP, said recording apparatus comprising:

separator means for separating a video signal into said plurality of sequences, and for separating each sequence into said plurality of GOPs;

compressor means for compressing said plurality of GOPs and said plurality of sequences, said compressing means further comprising means for controlling a compression rate and a reference generator that determines a rate of compression by the compressor means;

header generator means for generating a GOP header intrinsic to a corresponding GOP of said plurality of GOPs, and for generating a sequence header intrinsic to a corresponding sequence of said plurality of sequences; and

adding means for adding said GOP header at the beginning of said corresponding GOP, for adding said sequence header at the beginning of said corresponding sequence, and for also adding a copy of said sequence header at a beginning of at least a final GOP in said corresponding sequence.

5,701,387

STORAGE TANK WATER HEATER TEMPERING SYSTEM

Colin A. McGugan, 866 Ribston Rd., Mississauga, Ontario, Canada, L4Y 1B1

Filed Dec. 19, 1994, Ser. No. 359,132

Int. Cl.[6] F24H *1/20*

U.S. Cl. 392—456 **8 Claims**

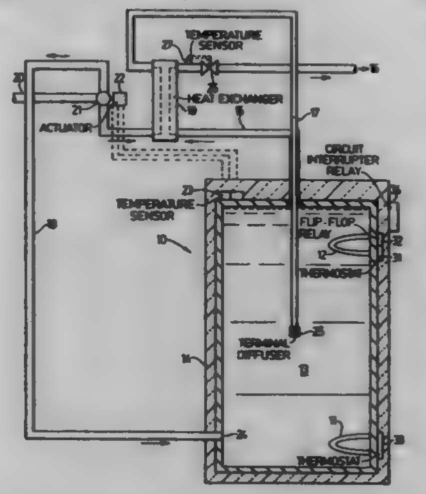

1. A tempering system for a hot water storage tank providing an internal storage space with heating means located in a lower region of the storage space and a temperature sensor responsive to water temperature in an upper region of the storage space, outlet means communicating with said upper region of the storage space for conveying heated water to a distribution system on demand, cold water inlet means for replenishing the hot water storage tank on demand, and a heat exchanger linking said outlet means with the cold water inlet means for transferring heat from the heated water to cold water entering the hot water storage tank, wherein the cold water inlet means comprises a first conduit passing through the heat exchanger whereby to receive transferred heat, a second conduit bypassing the heat exchanger and communicating with the lower region of the storage space for conveying water directly to the lower region, and a diverter valve interconnecting said first and second conduits with a common mains inlet, the diverter valve being responsive to and operable by the temperature sensor whereby to apportion the cold water flow between said first and second conduits in accordance with the temperature of water exiting from the hot water storage tank.

5,701,388

COMBINED HEATER AND PUMP

Michael D. Steinhardt, Kiel; Isadore Balan, Mequon, and Kenneth J. Sieth, Delafield, all of Wis., assignors to Kohler Co., Kohler, Wis.

Filed Dec. 22, 1994, Ser. No. 362,671

Int. Cl.[6] F24H *1/08*

U.S. Cl. 392—471 **23 Claims**

1. A pump for pumping and heating a liquid, the pump being drivable by a motor, the pump comprising:

a pump housing having an internal pump chamber, a liquid inlet into the chamber, a chamber base wall, and a radial outlet, the base wall having an opening therethrough;

a drive shaft rotatably mounted in the opening, the shaft being suitable to be attached to a motor located outside the chamber;

an impeller mounted on the drive shaft to rotate therewith in the chamber, the impeller mounted such that the outlet is between the impeller and the base wall; and

a heater sandwiched in the chamber between the base wall and impeller;

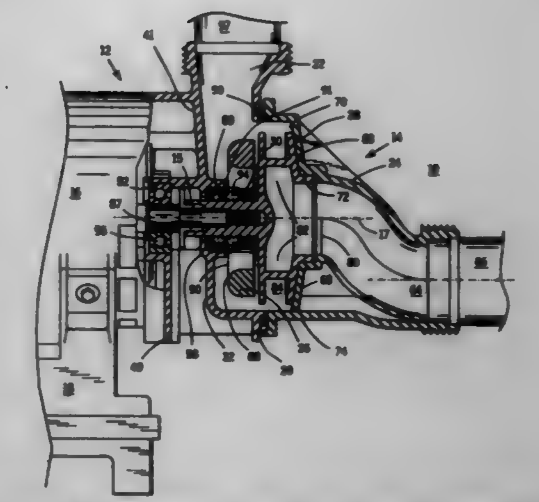

whereby upon operation of the pump and connection of the pump to a liquid supply, rotation of the shaft can draw liquid in from the inlet, past the heater and through the outlet.

5,701,389

WINDOW SWITCHING BASED ON INTERBLOCK AND INTRABLOCK FREQUENCY BAND ENERGY

Sean Matthew Dorward, Somerville, and James David Johnston, Warren, both of N.J., assignors to Lucent Technologies, Inc., Murray Hill, N.J.

Filed Jan. 31, 1995, Ser. No. 381,376

Int. Cl.[6] G10L *7/04*

U.S. Cl. 395—2.12 **9 Claims**

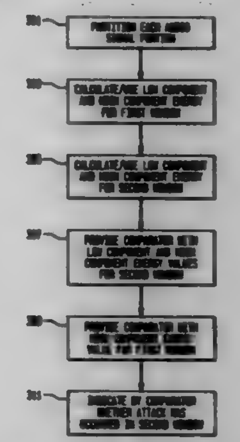

1. A method of encoding a portion of an audio signal, the method comprising:

(a) partitioning the portion of the audio signal into a first time block and a second time block;

(b) calculating a first time block first energy value and a first time block second energy value, the first time block first energy value representing an amount of energy in a lust frequency band of the first time block, the first time block second energy value representing an amount of energy in a second frequency band of the first time block;

(c) calculating a second time block first energy value and a second time block second energy value, the second time block first energy value representing an amount of energy in a first frequency band of the second time block, the second time block second energy value representing an amount of energy in a second frequency band of the second time block;

(d) determining if an attack has occurred in the second time block based upon a comparison of the second time block first energy value and the second time block second energy value and a comparison of the first time block and the second time block.

5,701,390

SYNTHESIS OF MBE-BASED CODED SPEECH USING REGENERATED PHASE INFORMATION

Daniel W. Griffin, Hollis, N.H., and John C. Hardwick, Sudbury, Mass., assignors to Digital Voice Systems, Inc., Burlington, Mass.

Filed Feb. 22, 1995, Ser. No. 392,099

Int. Cl.⁶ G10L *7/02*

U.S. Cl. 395—2.15 **10 Claims**

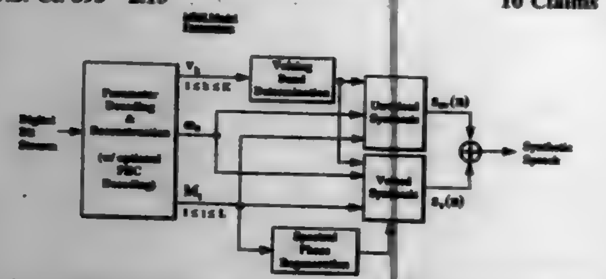

1. A method for decoding and synthesizing a synthetic digital speech signal from a plurality of digital bits of the type produced by dividing a speech signal into a plurality of frames, determining voicing information representing whether each of a plurality of frequency bands of each frame should be synthesized as voiced or unvoiced bands; processing the speech frames to determine spectral envelope information representative of the magnitudes of the spectrum in the frequency bands, and quantizing and encoding the spectral envelope and voicing information, wherein the method for decoding and synthesizing the synthetic digital speech signal comprises the steps of:

decoding the plurality of bits to provide spectral envelope and voicing information for each of a plurality of frames;

processing the spectral envelope information to determine regenerated spectral phase information based on local envelope smoothness for each of the plurality of frames,

determining from the voicing information whether frequency bands for a particular frame are voiced or unvoiced;

synthesizing speech components for voiced frequency bands using the regenerated spectral phase information,

synthesizing a speech component representing the speech signal in at least one unvoiced frequency band, and

synthesizing the speech signal by combining the synthesized speech components for voiced and unvoiced frequency bands.

5,701,391

METHOD AND SYSTEM FOR COMPRESSING A SPEECH SIGNAL USING ENVELOPE MODULATION

Shao Wei Pan, Zurich, and Shay-Ping Thomas Wang, Long Grove, both of Ill., assignors to Motorola, Inc., Schaumburg, Ill.

Filed Oct. 31, 1995, Ser. No. 558,582

Int. Cl.⁶ G10L *9/18*

U.S. Cl. 395—2.21 **20 Claims**

1. A method for compressing a speech signal into compressed speech data, the method comprising the steps of:

sampling the speech signal to form a sequence of speech data;

segmenting the sequence of speech data into at least one subsequence of segmented speech data;

detecting an envelope of the subsequence of segmented speech data to form a subsequence of envelope data;

dividing each datum of the subsequence of segmented speech data by a corresponding datum of the subsequence of envelope data to form a subsequence of de-envelope data;

transforming the subsequence of de-envelope data into one or more spectral components;

determining a predetermined number of dominant frequencies corresponding to dominant spectral components, the dominant spectral components being the predetermined number of the spectral components having greatest magnitudes;

generating one or more envelope coefficients by fitting the subsequence of envelope data to a polynomial function; and

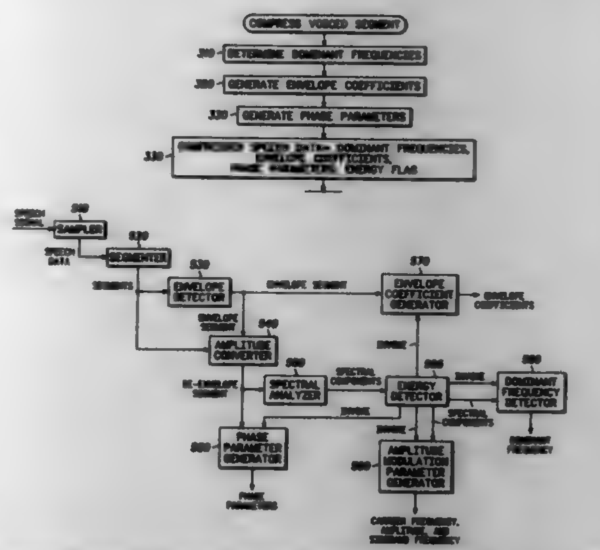

generating one or more phase parameters representing a phase of each of the dominant spectral components,

wherein the compressed speech data includes the dominant frequencies, the envelope coefficients and the phase parameters.

5,701,392

DEPTH-FIRST ALGEBRAIC-CODEBOOK SEARCH FOR FAST CODING OF SPEECH

Jean-Pierre Adoul, and Claude Laflamme, both of Sherbrooke, Canada, assignors to Universite de Sherbrooke, Sherbrooke, Canada

Continuation-in-part of Ser. No. 401,785, Mar. 10, 1995, which is a continuation-in-part of Ser. No. 927,528, Sep. 10, 1992, Pat. No. 5,444,816. This application Jul. 31, 1995, Ser. No. 509,525

Claims priority, application Canada, Feb. 23, 1990, 2010830

Int. Cl.⁶ G10L *3/02*

U.S. Cl. 395—2.28 **31 Claims**

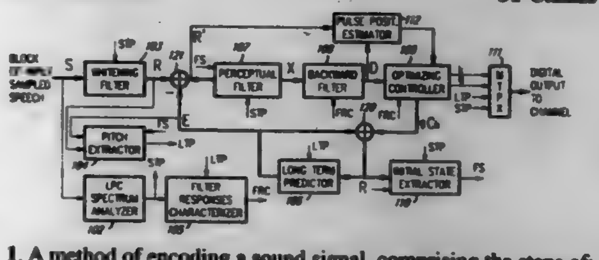

1. A method of encoding a sound signal, comprising the steps of:

providing a codebook circuit for forming a codebook including a set of codevectors A_k each defining a plurality of different positions p and comprising N non-zero-amplitude pulses each assignable to predetermined valid positions p of the codevector;

providing a device for conducting in said codebook a depth-first search involving a tree structure defining a number M of ordered levels, each level m being associated with a predetermined number N_m of non-zero-amplitude pulses, $N_m \geq 1$, wherein the sum of said predetermined numbers associated with all said M levels is equal to the number N of the non-zero-amplitude pulses comprised in said codevectors, each level m of the tree structure being further associated with a path building operation, with a given pulse-order rule and with a given selection criterion;

wherein:

in a level 1 of the tree structure, the associated path-building operation comprises the following substeps:

choosing a number N_1 of said N non-zero-amplitude pulses in relation to the associated pulse-order rule;

selecting at least one of the valid positions p of said N_1 non-zero-amplitude pulses in relation to the associated selection criterion to define at least one level-1 candidate path;

in a level m of the tree structure, the associated path-building operation defines recursively a level-m candidate path by extending a level-(m−1) candidate path through the following substeps:

choosing N_m of said non-zero-amplitude pulses not previously chosen in the course of building said level-(m−1) path in relation to the associated pulse-order rule;

selecting at least one of the valid positions p of said N_m non-zero-amplitude pulses in relation to the associated selection criterion to form at least one level-m candidate path; and

wherein a level-M candidate path originated at a level-1 and extended during the path-building operations associated with subsequent levels of the tree structure determines the respective positions p of the N non-zero-amplitude pulses of a codevector and thereby defines a candidate codevector A_k.

5,701,393

SYSTEM AND METHOD FOR REAL TIME SINUSOIDAL SIGNAL GENERATION USING WAVEGUIDE RESONANCE OSCILLATORS

Julius O. Smith, III, and Perry R. Cook, both of Palo Alto, Calif., assignors to The Board of Trustees of the Leland Stanford Junior University, Stanford, Calif.

Continuation of Ser. No. 878,953, May 5, 1992, abandoned. This application Jun. 28, 1994, Ser. No. 267,175

Int. Cl.⁶ G10H *7/12;* **G10K** *15/02*

U.S. Cl. 395—2.67 **12 Claims**

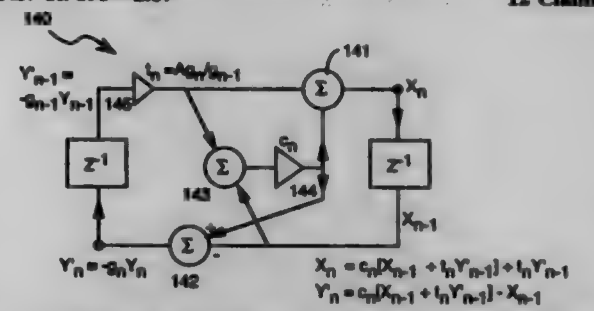

9. A method for synthesizing an acoustic sound, in an acoustic synthesizer having first and second interconnected waveguide resonance oscillators where each of said waveguide oscillators includes two digital delay elements coupled to a digital waveguide junction, comprising the steps of:

generating first and second sampled sinusoidal waveforms by said first and second interconnected waveguide resonance oscillators; wherein each of said first and second waveguide resonance oscillators is a distinct closed-loop oscillator;

receiving the first signal on the input node of said first digital delay elements and receiving the second signal on the input node of said second digital delay elements;

outputting the respective received signals on their respective output nodes after a delay of one sample period of predefined duration;

computing, once each sample period, new values for the first and second signals as a function of the two signal's output from said two digital delay elements, wherein said computing step includes multiplying a signal value, generated by one of a plurality of digital signal adders, by a coefficient value that determines the first and second signal's frequency of oscillation;

generating, in said first waveguide resonance oscillator, one of the first and second signals as the first sampled sinusoidal waveform;

generating, in said second waveguide resonance oscillator, a second one of the first and second signals as the second sampled sinusoidal waveform, wherein said step of generating the second sampled sinusoidal waveform includes modulating its coefficient value with the first sampled sinusoidal waveform, so that the second sampled sinusoidal waveform is frequency modulated in accordance with the first sampled sinusoidal waveform;

said second waveguide resonance oscillator's coefficient modulation element having an input port for receiving said first sampled sinusoidal waveform; and

wherein said second waveguide resonance oscillator is coupled to said first waveguide resonance oscillator only through modulation of said second waveguide resonance oscillator's coefficient value by said first sampled sinusoidal waveform.

5,701,394

INFORMATION PROCESSING APPARATUS HAVING A NEURAL NETWORK AND AN EXPERT SYSTEM

Setsuo Arita, Hitachiota; Tetsuo Ito, Hitachi; Yukiharu Ohga, Katsuta; Hiroshi Ujita, Tokyo; Fumio Murata, Katsuta; Masao Miyake, Hitachi, and Yasuo Nishizawa, Hitachiota, all of Japan, assignors to Hitachi, Ltd., Tokyo, Japan

Continuation of Ser. No. 628,329, Dec. 17, 1990, abandoned. This application Apr. 18, 1995, Ser. No. 425,334

Claims priority, application Japan, Dec. 18, 1989, 1-325985; Jul. 20, 1990, 2-190548

Int. Cl.⁶ G05B *13/04;* **G06F** *15/18*

U.S. Cl. 395—11 **47 Claims**

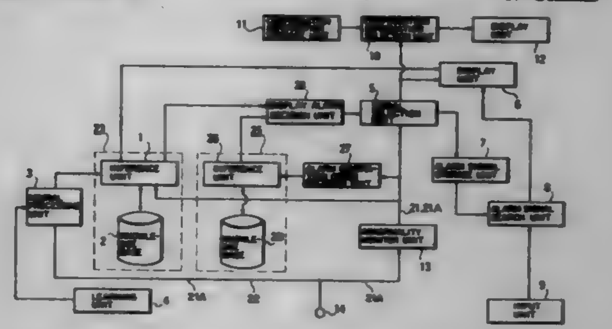

1. An information processing system comprising:

neural processing means for inputting a plurality of pieces of first information and outputting second information by processing said first information;

first knowledge processing means for outputting third information through inference by use of said second information from said neural processing means and first knowledge information;

first means for inputting said pieces of first information, and generating fourth information showing a singular state of each of said pieces of first information every time each of said pieces of first information is supplied thereto;

second knowledge processing means for outputting fifth information through inference by use of said fourth information from said first means and second knowledge information; and

second means for receiving said third information and said fifth information and producing sixth information to be outputted by compensating one information of said third and fifth information with the other of said third and fifth information in a manner that said sixth information to be outputted at an arbitrary time point is produced by using both said third and fifth information together, simultaneously.

5,701,395
METHOD OF PROGRAMMING A POLYNOMIAL PROCESSOR
Bruce Edward Stuckman, Algonquin, and David Alan Hayner, Arlington Heights, both of Ill., assignors to Motorola, Inc., Schaumburg, Ill.
Filed Dec. 19, 1994, Ser. No. 358,278
Int. Cl.⁶ G06F *15/18;* **G06F** *1/00*
U.S. Cl. 395—20 **14 Claims**

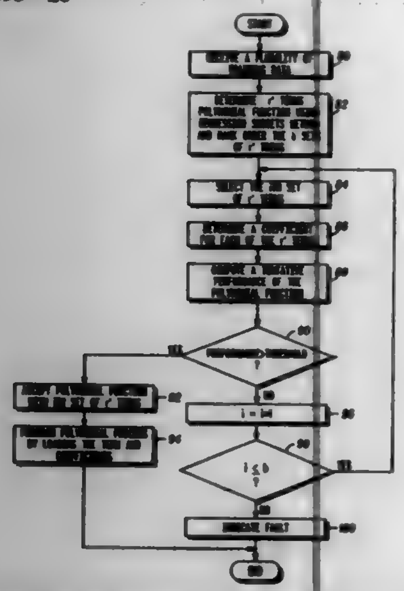

1. A method for programming a polynomial processor having at least one processor input and a processor output, the polynomial processor calculating the processor output as a polynomial function of the at least one processor input, the method comprising the following steps:
receiving a plurality of training data, the training data expressing a desired relationship between the processor output and the at least one processor input;
determining r' terms of the polynomial function using a regression subsets technique on the plurality of training data;
determining r' coefficients of the r' terms; and loading the r' terms and the r' coefficients into the polynomial processor.

5,701,396
MULTIMODE-LASER FOR AN OPTICAL INFORMATION PROCESSING SYSTEM SUCH AS A NEURAL NET
Coen T. H. F. Liedenbaum; Sel B. Colak, and Johannes J. H. B. Schleipen, all of Eindhoven, Netherlands, assignors to U.S. Philips Corporation, New York, N.Y.
Filed Nov. 23, 1994, Ser. No. 345,023
Claims priority, application European Pat. Off., Nov. 26, 1993, 93203308
Int. Cl.⁶ G06G *9/00;* **H01S** *3/13*
U.S. Cl. 395—25 **12 Claims**

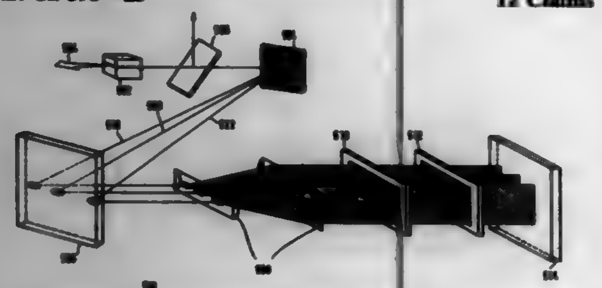

1. An optical information processing system functionally comprising:
coding means for individually coding a plurality of optical information carrier waves;
processing means coupled to the coding means for processing the plurality of coded information carrier waves, wherein the processing means comprises first laser means for producing laser light through longitudinal laser mode competition upon reception of the coded information carrier waves.

5,701,397
CIRCUIT FOR PRE-CHARGING A FREE NEURON CIRCUIT
Andre Steimle, Evry; Didier Louis, Fontainebleau, and Guy Paillet, Montpellier, all of France, assignors to International Business Machines Corporation, Armonk, N.Y., a part interest
Filed Jun. 7, 1995, Ser. No. 485,336
Claims priority, application European Pat. Off., Jul. 28, 1994, 94480069
Int. Cl.⁶ G06F *15/18*
U.S. Cl. 395—27 **7 Claims**

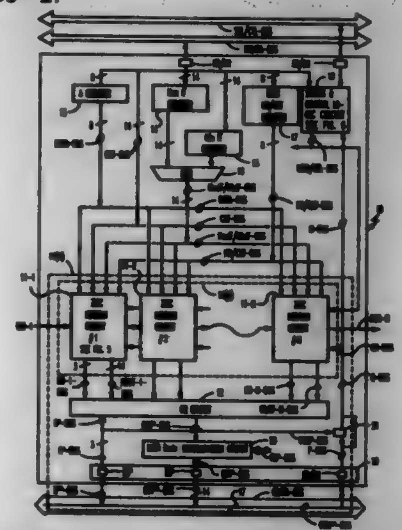

1. A neural network comprised of a plurality of neuron circuits being either in an engaged or a free state, each said neuron in its engaged state having a prototype vector stored therein, each said neuron including a pre-charge circuit for loading an input vector into a determined neuron circuit from an input data bus (DATA-BUS), said input vector (A) comprised of n components, said determined neuron circuit being a ready to learn neuron circuit, said pre-charge circuit comprising:
weight memory means (251) for storing input vector components, said weight memory means coupled to the said input data bus, said input vector components being the components of a potential prototype vector (B), said prototype vector being stored in said weight memory means under the control of a memory control signal (RS);
output bus (RAM-BUS) means for transporting the prototype vector components stored in said weight memory means, said weight memory means being connected to said output bus means; and,
circuit means (600) for generating said memory control signal (RS) and for identifying whether said neuron circuit is the determined free neuron circuit, such that said memory control signal (RS) writes said input vector components in the weight memory means of only said determined free neuron circuit during a recognition phase.

5,701,398
ADAPTIVE CLASSIFIER HAVING MULTIPLE SUBNETWORKS
Michael T. Glier, Chepachet, R.I.; John Cole, Northboro, and Mark Laird, Milford, both of Mass., assignors to Nestor, Inc., Providence, R.I.
Continuation of Ser. No. 269,848, Jul. 1, 1994, abandoned. This application Jul. 19, 1996, Ser. No. 684,683
Int. Cl.⁶ G06F *15/18*
U.S. Cl. 395—27 **13 Claims**

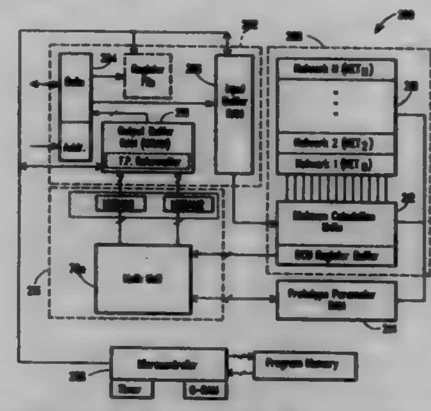

1. A neural network for processing an input pattern in an effort to classify said input pattern into one or more classes, said neural network comprising:
a memory array;
a controller operative to store a plurality of sub-nets in said memory array, each of said sub-nets comprising a corresponding plurality of weights;
a distance calculation unit coupled to said memory array for calculating a distance between at least one feature of said input pattern and said plurality of weights of one of said plurality of sub-nets;
a math unit coupled to said distance calculation unit for comparing said calculated distance with a region of influence value associated with each of said plurality of weights of said one of said plurality of sub-nets to provide a class response output signal, wherein said input pattern is classified into said one or more classes using said one of said plurality of sub-nets independently of other ones of said plurality of sub-nets; and
a prototype parameter memory for storing said region of influence value associated with each of said plurality of weights of said one of said plurality of sub-nets.

5,701,399
INTEGRATION OF CASE-BASED SEARCH ENGINE INTO HELP DATABASE
S. Daniel Lee, San Gabriel, Calif.; Trung D. Nguyen, Tomball, and Mary P. Czerwinski, The Woodlands, both of Tex., assignors to Inference Corporation, El Segundo, Calif.
Continuation of Ser. No. 75,055, Jun. 9, 1993, abandoned. This application Dec. 20, 1996, Ser. No. 771,311
Int. Cl.⁶ G06F *15/18*
U.S. Cl. 395—51 **10 Claims**

1. A system for presenting information to an operator, said system comprising:
an input interface disposed for a user to enter a plurality of help commands;
a help database having a plurality of help topics and comprising text thereof;
a help program coupled to said input interface and to said help database, said help program comprising means for selecting help topics from said help database in response to said help commands entered by said user using said input device;
a conversation program for converting and importing said help topics and text thereof from a help document format to a case base format;

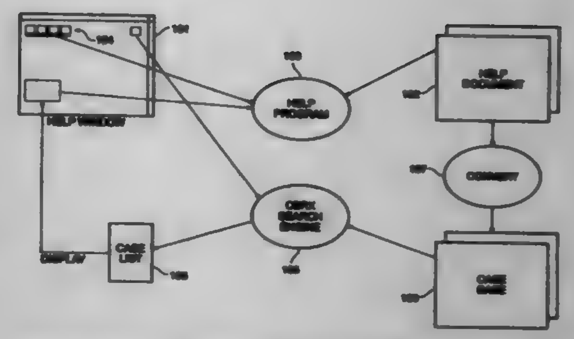

a case base having a plurality of cases created by importing said plurality of help topics and text thereof in said case format from said conversion program, said plurality of cases corresponding to said plurality of help topics and comprising text thereof;
a case-based search engine coupled to said input interface and to said case base, said case-based search engine comprising means for selecting at least one matching case in response to said help commands entered by said user using said input interface, wherein said case-based search engine is coupled to said help program and is responsive to a command from said help program;
means for coupling a set of search parameter inputs to said case-based search engine, wherein said search parameter inputs comprises a natural language text description of a desired help topic;
means for selecting a single help topic in response to said at least one matching case; and
means for outputting said single help topic.

5,701,400
METHOD AND APPARATUS FOR APPLYING IF-THEN-ELSE RULES TO DATA SETS IN A RELATIONAL DATA BASE AND GENERATING FROM THE RESULTS OF APPLICATION OF SAID RULES A DATABASE OF DIAGNOSTICS LINKED TO SAID DATA SETS TO AID EXECUTIVE ANALYSIS OF FINANCIAL DATA
Carlos Armando Amado, 444 Brickell Avenue #51-111, Miami, Fla. 33131-2400
Filed Mar. 8, 1995, Ser. No. 400,355
Int. Cl.⁶ G06F *15/18*
U.S. Cl. 395—76 **12 Claims**

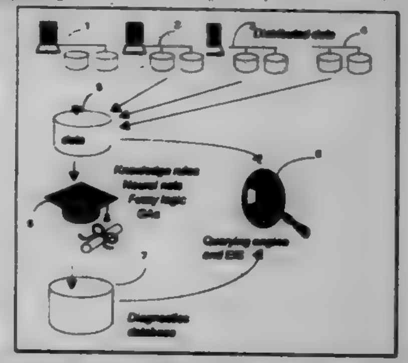

1. An apparatus for providing an expert systems toolkit, comprising:
a memory for storing data;
a computer coupled to said memory and having a video display and an input device;
a program in execution by said computer for controlling operations thereof for receiving user input defining one or more analysis rules to be applied to user specified data from said memory, each said analysis rule being a user defined arithmetic and/or logic test to be applied to user specified items of said data and for controlling said computer to receive and store user entered data defining the alphanumeric text of a

diagnostic statement associated with each true result of each said analysis rule, each said diagnostic statement comprised of a user defined alphanumeric text string which the user can program to define the significance of the true result, its relevance or any other expression which provides meaning to the user of the true result of the analysis rule, and for controlling said computer to receive user input controlling which of said analysis rules are to be applied to said data, and for applying said analysis rules so designated to the data designated by said user and returning a true or false result for each analysis rule so applied depending upon the state of the data to which each analysis rule was applied, and for each true result returned by an analysis rule, controlling said computer to store in a file in said memory the user programmed text of a diagnostic statement associated with each true result as a diagnostic in a diagnostic database, and for controlling said computer to receive and store in said memory user input defining one or more expert tests, each expert test comprising a user defined arithmetic and/or logic statement to be applied to one or more diagnostics selected by user input from the diagnostics stored in said diagnostic database, said arithmetic and/or logic statement comprised of mathematical operators and/or logical operators from any logic set such as predicate logic or Boolean logic including at least the AND, OR and NOT functions, each said expert test returning either a true or false result, and for controlling said computer to receive user input defining the text of a super diagnostic statement in the form of an alphanumeric string associated with each true result of one of said expert tests, each said superdiagnostic being an alphanumeric string which the user can program to define the significance of the true result of the expert rule, its relevance or any other expression which provides meaning to the user of the true result of the expert rule, and for controlling said computer to receive user input defining which of said expert tests to execute on user specified diagnostics in said diagnostic database, and for controlling the computer to execute the expert tests so designated, and for controlling said computer to store as a super diagnostic in a super diagnostic file in said memory the super diagnostic statement associated with any true result returned by any said expert test.

5,701,401
PRINTING BLACK AND WHITE REPRODUCIBLE COLOR DOCUMENTS
Steven J. Harrington, Webster, and Jean A. Taber, Williamson, both of N.Y., assignors to Xerox Corporation, Stamford, Conn.
Filed Oct. 2, 1996, Ser. No. 720,654
Int. Cl.⁶ G06K *15/02;* **H04N** *1/50;1/56;1/23*
U.S. Cl. 395—109 **14 Claims**

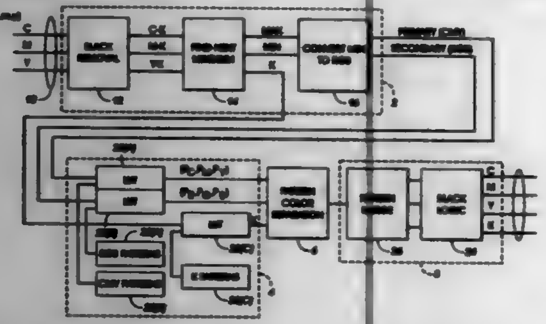

1. A document reproduction system, for reproducing a color document in a format enabling improved black and white copying retaining color intent of the color document, including:

a document input, receiving electronic documents having image areas therein designated to be printed in a plurality of colors;

an image processing unit, processing said documents for printing and converting each color into a set of repeated patterns, each set of repeated patterns unique to a single color and corresponding to a basis color set, said patterns varying with the a density of color in a corresponding area in the document;

a printer, reproducing said image areas with, whereby patterns for each color are added together to form a final image, which when copied, retains color intent in terms of differentiation of areas of color;

where said printer is a color printer, printing each color with a single colorant in a limited set of thereof.

5,701,402
IMAGE FORMING APPARATUS WITH DETACHABLE PROCESS UNIT
Kazuki Miyamoto; Naoyuki Ohki, both of Yokohama; Masaki Nakano, Ebina; Takahiro Ushiro, Kawasaki; Yasuo Fukazu, Kawasaki; Atsushi Chaki, Yokohama; Shinichi Takata, Kawasaki, and Kazuhiro Ohyoshi, Wako, all of Japan, assignors to Canon Kabushiki Kaisha, Tokyo, Japan
Continuation of Ser. No. 515,216, Aug. 15, 1995, abandoned. This application Jan. 31, 1997, Ser. No. 791,541
Claims priority, application Japan, Aug. 30, 1994, 6-228883; Aug. 30, 1994, 6-228884; Aug. 30, 1994, 6-228885
Int. Cl.⁶ G06K *15/00*
U.S. Cl. 395—115 **14 Claims**

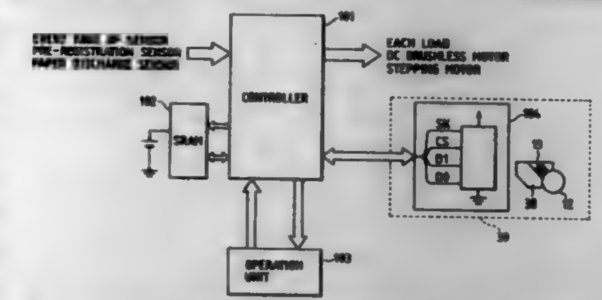

1. An image forming apparatus for executing image formation, in accordance with an image forming condition that influences image quality, by using a detachable process cartridge mounted thereon, the mounted process cartridge having its own particular characteristics that influence image quality, said apparatus comprising:

a first memory for storing a number of image formations;

renewal means for renewing a number of image formations stored in a second memory provided in said process cartridge and the number of image formations stored in said first memory, in response to execution of an image forming operation;

comparator means for comparing, when a power supply to said image forming apparatus is turned on, the number of image formations stored in said first memory with the number of image formations stored in said second memory; and

control means adapted to effect, when the number of image formations stored in said first memory and the number of image formations stored in said second memory do not mutually coincide, a first determining operation for determining the image forming condition that influences image quality and is specific to said process cartridge.

5,701,403
CAD SYSTEM
Hideo Watanabe; Satoru Boh; Akira Miyata, and Keiichi Shiotani, all of Hyogo, Japan, assignors to Mitsubishi Denki Kabushiki Kaisha, Tokyo, Japan
Filed May 23, 1995, Ser. No. 447,791
Claims priority, application Japan, Jun. 3, 1994, 6-122771
Int. Cl.⁶ G06T *17/40*
U.S. Cl. 395—119 **21 Claims**

1. A CAD system for creating a product model from a two dimensional drawing, said CAD system comprising:

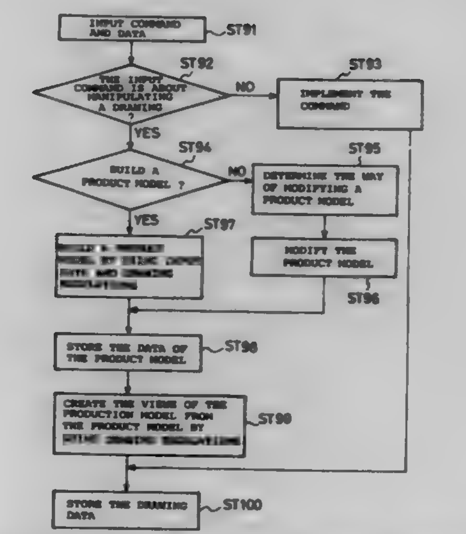

means for defining a correspondence between predetermined drawing regulations and three-dimensional objects;

means for building a three dimensional product model on the basis of a two-dimensional drawing, which is created under one of said predetermined drawing regulations, by reference to said means for defining; and

means for creating a plurality of two-dimensional views of the three-dimensional product model constructed by said means for building by reference to said means for defining and in accordance with a shape attribute added to a view of the product model.

5,701,404
METHOD AND SYSTEM FOR EFFICIENTLY TRIMMING A NURBS SURFACE WITH A PROJECTED CURVE
Marc P. Stevens, La Prairie, Canada, and Alan Crawford, Salt Lake City, Utah, assignors to Softimage, Montreal, Canada
Filed May 31, 1996, Ser. No. 658,951
Int. Cl.⁶ G06T *15/30*
U.S. Cl. 395—123 **21 Claims**

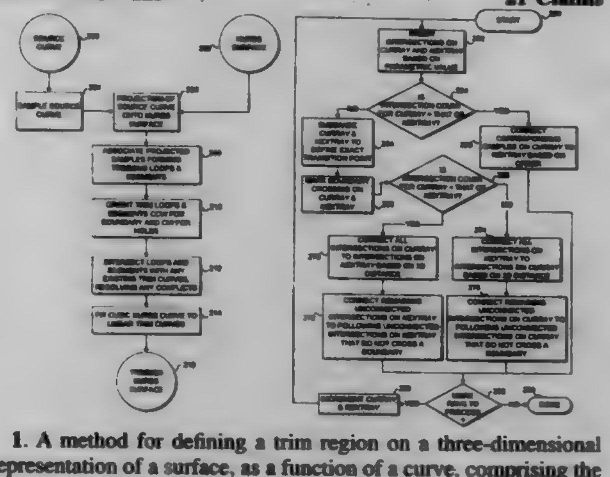

1. A method for defining a trim region on a three-dimensional representation of a surface, as a function of a curve, comprising the steps of:

(a) defining a plurality of spaced-apart sample points along the curve;

(b) projecting rays from the plurality of points generally in a direction toward the surface, so that at least some of the rays intersect the surface at points of intersection;

(c) mapping each of the points of intersection of the rays with the surface into a U,V parametric domain;

(d) determining a number of the points of intersection of each ray with the surface;

(e) if the number of the points of intersection of two adjacent rays with the surface are equal, connecting corresponding points of intersection of said adjacent rays on the surface, to define at least a portion of a trim region;

(f) if the number of the points of intersection of two adjacent rays with the surface are different, detecting a transition of the surface that is disposed between said adjacent rays, where said transition indicates a location where one of the adjacent rays enters or leaves the surface, thereby defining a remaining portion of the trim region; and

(g) displaying the surface and trim regions on a display.

5,701,405
METHOD AND APPARATUS FOR DIRECTLY EVALUATING A PARAMETER INTERPOLATION FUNCTION USED IN RENDERING IMAGES IN A GRAPHICS SYSTEM THAT USES SCREEN PARTITIONING
Michael W. Kelley, San Mateo, and Stephanie L. Winner, Santa Clara, both of Calif., assignors to Apple Computer, Inc., Cupertino, Calif.
Filed Jun. 21, 1995, Ser. No. 492,923
Int. Cl.⁶ G06F *15/00*
U.S. Cl. 395—141 **17 Claims**

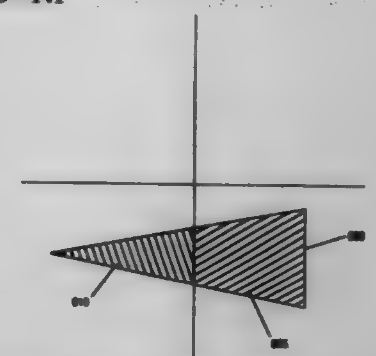

1. A computer graphics system adapted to be coupled to a display device for displaying pixel data representing geometric entities comprising:

(a) a screen partitioning circuit for partitioning said display device into a plurality of local regions, determining that a first geometric entity covers a first set of pixels in a first local region of the display device, and generating a first geometric entity's boundary defining data that is defined relative to a display device coordinate system;

(b) a first local coordinate generator coupled to said screen partitioning circuit for receiving said first geometric entity's boundary defining data and generating in response thereto a first local set of coordinates, defined relative to a first local coordinate system of said first local region, for all pixels of said first set of pixels;

(c) a first local parameter interpolation function generator generating a first local parameter interpolation function, representing parameter values for all pixels of said first set of pixels when these pixels are defined relative to said first local coordinate system; and

(d) a first local parameter interpolator coupled to said first local coordinate generator and said first local parameter interpolation function generator, said first local parameter interpolator directly calculating the parameter values for each pixel of said first set of pixels by using said first local parameter interpolation function and said first local set of coordinates.

5,701,406
REDUNDANT ARRAY OF DISKS WITH IMPROVED STORAGE AND RECOVERY SPEED
Toshio Matsumoto; Hiroshi Baba; Kazuhiko Itoh, and Shiro Ogura, all of Kamakura, Japan, assignors to Mitsubishi Denki Kabushiki Kaisha, Tokyo, Japan
Division of Ser. No. 110,423, Aug. 23, 1993, Pat. No. 5,517,632. This application Jan. 4, 1996, Ser. No. 582,874
Claims priority, application Japan, Aug. 26, 1992, 4-226976
Int. Cl.^{6} G06F *11/08; 11/16*
U.S. Cl. 395—182.04 **14 Claims**

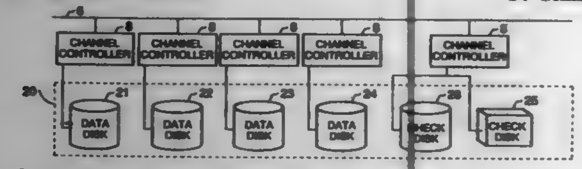

7. A redundant array of disks, comprising:
a plurality of rotating disks for storing data;
at least one solid-state disk and a further rotating disk for storing check information; and
an array controller coupled to read and write data on said rotating disks and to read and write check information, pertaining to said data, on said solid-state disk and on said further rotating disk, wherein the array controller notifies a host computer that said data is stored on said plurality of rotating disks after said data is stored on said plurality of rotating disks and before said check information is stored on said further rotating disk.

5,701,407
REDUNDANT ARRAY OF DISKS WITH IMPROVED DATA RECONSTRUCTION
Toshio Matsumoto; Hiroshi Baba; Kazuhiko Itoh, and Shiro Ogura, all of Kamakura, Japan, assignors to Mitsubishi Denki Kabushiki Kaisha, Tokyo, Japan
Division of Ser. No. 110,423, Aug. 23, 1993, Pat. No. 5,517,632. This application Jan. 4, 1996, Ser. No. 582,947
Claims priority, application Japan, Aug. 26, 1992, 4-226976
Int. Cl.^{6} G06F *11/34*
U.S. Cl. 395—182.05 **10 Claims**

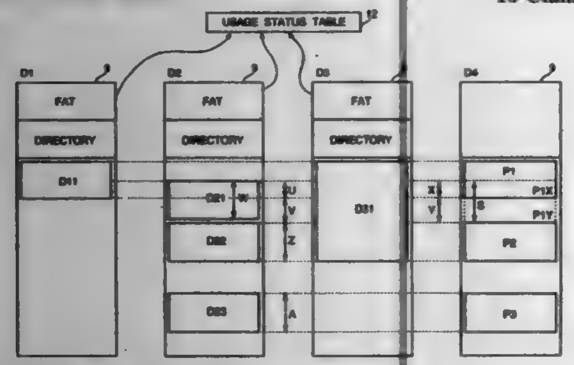

6. A redundant array of disks, comprising:
a plurality of disks partitioned into areas, certain areas being designated as data areas for storing data, and certain areas being designated as check areas for storing check information of corresponding data areas on different disks;
a first semiconductor memory for storing new data received from a host computer;
a second semiconductor memory for storing a usage status table indicating, for each disk in said redundant array, which areas are in use and which are not in use;
a microprocessor coupled to said plurality of disks, said first semiconductor memory, and said second semiconductor memory, programmed to choose selected data areas for storing said new data, write said new data on said selected data areas, and write new check information on corresponding check areas; and
a check processor coupled to said microprocessor, for generating said new check information from said new data, and from old data and old check information read from said disks as necessary according to information in said usage status table, said new check information pertaining only to areas indicated by said usage status table to be in use.

5,701,408
METHOD FOR TESTING COMPUTER OPERATING OR APPLICATION PROGRAMMING INTERFACES
Julie Eileen Cornell, Fort Lauderdale, Fla.; Jorge Lazaro Diaz, The Woodlands, Tex.; Derek Wan Hok Ho, Miami, Fla.; Son Duc Nguyen, Boynton Beach, Fla., and Cuong Huu Tran, Boca Raton, Fla., assignors to International Business Machines Corporation, Armonk, N.Y.
Filed Jul. 10, 1995, Ser. No. 500,276
Int. Cl.^{6} G06F *11/00*
U.S. Cl. 395—183.14 **6 Claims**

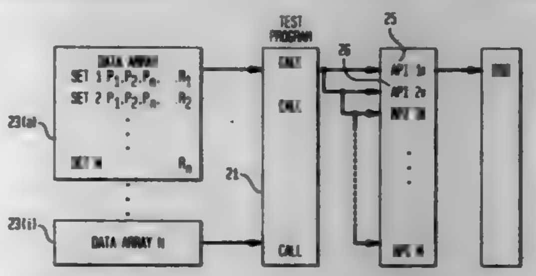

1. A method for testing composite programming interfaces comprising the steps of:
creating a plurality of data structures which comprise parallel arrays of parameter values and return values for each program interface; and,
creating a plurality of calls to each program interface for each set of parameter values contained in the parallel arrays, and comparing a return value produced in response to said call with the return values in said parallel arrays.

5,701,409
ERROR GENERATION CIRCUIT FOR TESTING A DIGITAL BUS
Stillman F. Gates, Los Gatos, Calif., assignor to Adaptec, Inc., Milpitas, Calif.
Filed Feb. 22, 1995, Ser. No. 392,442
Int. Cl.^{6} G06F *11/00*
U.S. Cl. 395—183.17 **4 Claims**

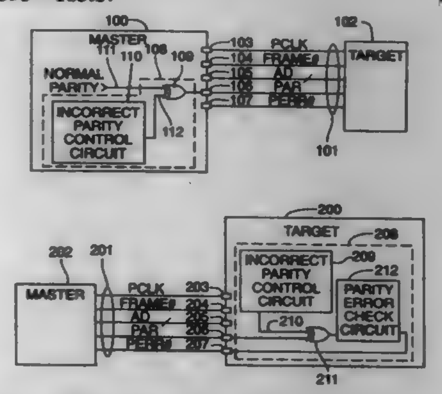

1. A method, comprising the steps of:
(a) controlling an integrated circuit of a first device to generate a bus error condition onto a parallel bus;
(b) on a second device coupled to said parallel bus, detecting said bus error condition and asserting a signal on said bus indicative of said bus error condition;

(c) receiving said signal on said integrated circuit and setting a bit in a status register of said integrated circuit to log said bus error condition; and
(d) repeating said steps (a) through (c), wherein each of said steps (a) involves outputting a different data value onto said parallel bus and outputting an incorrect parity value onto said parallel bus for the different data value, the incorrect parity value during the first step (a) being different from the incorrect parity value output during the second step (a).

5,701,410
METHOD AND SYSTEM FOR DETECTING FAULT CONDITIONS ON MULTIPLEXED NETWORKS
Bradley Earl BeMent; Kevin Mark Tiedje, both of Farmington Hills, and Robert Dennis Crawford, Livonia, all of Mich., assignors to Ford Motor Company, Dearborn, Mich.
Filed Sep. 9, 1996, Ser. No. 709,944
Int. Cl.^{6} G06F *11/34*
U.S. Cl. 395—183.19 **18 Claims**

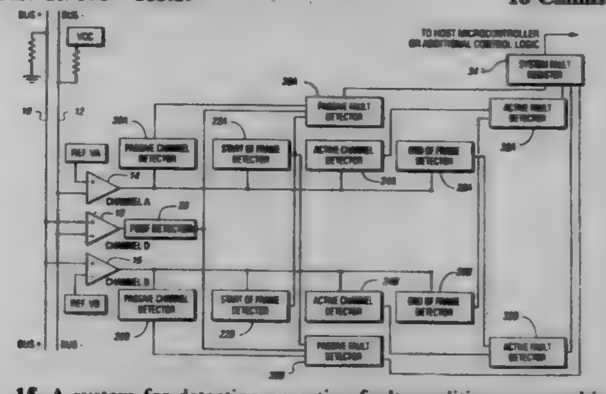

15. A system for detecting an active fault condition on a multiplexed network including first and second busses, the first and second busses and a differential therebetween each having an active and a passive state, the system comprising:
means for sensing an end of frame delimiter (EOF) for the first bus;
means for determining the state of the second bus when the EOF for the first bus is sensed;
means for determining the state of the second bus over a first selected time period ending when the EOF for the first bus is sensed if the state of the second bus determined is active; and
means for indicating an active fault for the second bus if the state of the second bus determined over the selected time period is active.

5,701,411
AUTOMATIC DETECTION OF NETWORK HARDWARE CONNECTION
Duc Tran, Long Beach; Robert D. Wadsworth, Costa Mesa; Tony K. Ip, Trabuco Canyon, and William C. Russell, Laguna Hills, all of Calif., assignors to Canon Information Systems, Inc., Costa Mesa, Calif.
Filed Nov. 4, 1994, Ser. No. 336,662
Int. Cl.^{6} G06F *11/20*
U.S. Cl. 395—200.1 **21 Claims**

1. A network communication device having plural different connectors, each connectable to a network, said device being capable of automatically selecting one of said different connectors for network communication, comprising:
a selector responsive to a selection signal which selects one of the plural different connectors in accordance with the selection signal;
a plurality of detectors, each detector associated with a corresponding connector, and each of which detects whether the corresponding connector is connected to the network before the network communication device effects network communication over the corresponding connector;
a processor which executes a selection process by outputting a selection signal so as to select, in turn, each of the plural different connectors starting with a first connector, maintaining a state of the selection signal in a case where the detector associated with the selected connector indicates connection to the network, cycling to a next connector in a case where the detector does not indicate connection to the network, and repeating the selection process in a case where said processor has cycled through all of said plural different connectors until it is determined that one of the plural connectors is connected to the network.

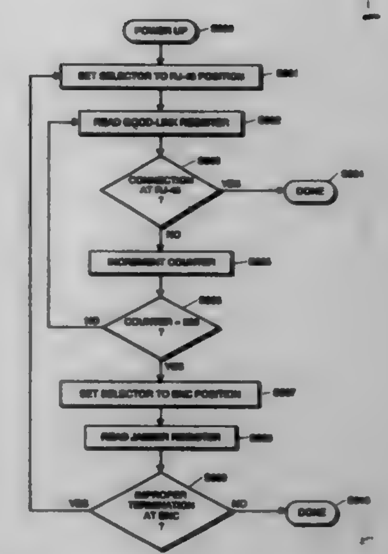

5,701,412
TELECOMMUNICATIONS SERVICE CONTROL METHOD IN INTELLIGENT NETWORK
Yukiko Takeda, Tokorozawa; Shiro Tanabe, Hidaka, and Kazuko Wakayama, Yokohama, all of Japan, assignors to Hitachi, Ltd., Tokyo, Japan
Filed Dec. 14, 1994, Ser. No. 355,509
Claims priority, application Japan, Dec. 17, 1993, 5-317726
Int. Cl.^{6} H01J *13/00*
U.S. Cl. 395—200.01 **24 Claims**

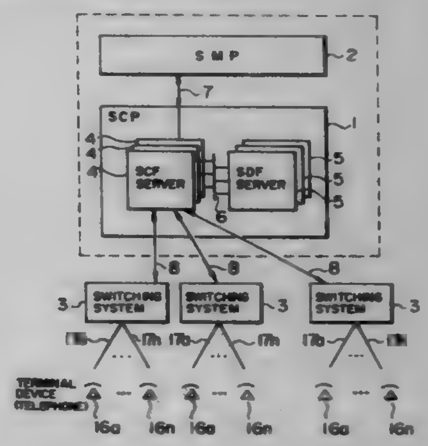

1. A telecommunications service control method in a telecommunications network having at least one switching system and a service control apparatus connected to said one switching system and equipped with a memory device for storing service control information for each user, said method comprising:
a step of creating a call control sequence for controlling a state of a call inside said one switching system when said one switching system accepts said call relating to a special tele-

communications service to be provided by said service control apparatus, whereby a first trigger for requesting transmission of a control signal to said service control apparatus is armed to a predetermined detection point in said call control sequence;

a step of controlling said call in accordance with said call control sequence by said one switching system and sending a first control signal from said one switching system to said service control apparatus when the state of said call shifts to said predetermined detection point in said call control sequence, said first control signal speciying a terminating user of said call;

a step of reading out the service control information corresponding to said terminating user specified by said first control signal from said memory device in said service control apparatus;

a step of notifying a detection point so that said service control apparatus arms a next trigger in said call control sequence to said one switching system in accordance with the content of said service control information read out from said memory device; and

a step of causing said one switching system to arm a second trigger to a detection point designated by said service control apparatus in said call control sequence.

5,701,413

MULTI-PROCESSOR SYSTEM WITH SHARED MEMORY

Ferruccio Zulian, Cornaredo; Angelo Ramolini, Cislago; Carlo Bagnoli, Milan, and Angelo Lazzari, Vigevano, all of Italy, assignors to Bull HN Information Systems Italia S.p.A., Italy

Filed Jan. 10, 1994, Ser. No. 179,440

Claims priority, application European Pat. Off., Jan. 25, 1993, 93830022

Int. Cl.[6] G06F *13/00;15/16*

U.S. Cl. 395—200.02 **11 Claims**

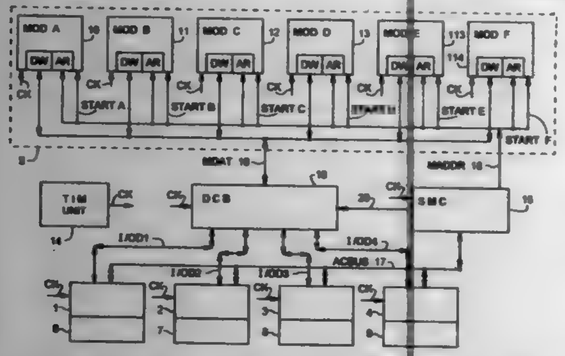

1. A multi-processor system wherein a plurality of groups of processors each group comprising at least one processor, has access to a plurality of shared memory modules, the operation of said groups of processors and said memory modules being timed by a common synchronization signal, comprising:

a memory control unit timed by said synchronization signal,

a multi-point system bus connected to said groups of processors and to said memory control unit which transfers memory addresses and read/write operation commands to said memory control unit,

interconnection logic circuits,

a plurality of point-to-point connection channels one for each of said groups of processors, which transfer data between each of said groups of processors and said shared memory modules and between said groups of processors, each of said connection channels individually connecting one of said groups of processors to said interconnection logic circuits,

a memory address channel connected to said memory control unit and to said shared memory modules for addressing of said shared memory modules by said control unit,

a memory data transfer channel for input/output transfers from said shared memory modules, for coupling said shared memory modules to said interconnection logic circuits, said interconnection logic circuits being controlled by said memory control unit for selectively connecting said point-to-point connection channels to said memory data transfer channel and between themselves, and

control logic circuits in said memory control unit which receive via said system bus memory addresses and associated read/write operation commands placed one at a time by said processor groups on said system bus, and operative to identify resources requested for execution of said read/write operation commands and their availability in time, to transfer said memory addresses and associated read/write operation commands onto said address channel, together with signals for selection of a shared memory module if said resources are available, and to command and time the selective interconnection of said point-to-point connection channels between themselves and with said memory data transfer channel in said interconnection logic circuits.

5,701,414

CONTROLLER FOR SELECTIVE CALL RECEIVER HAVING MEMORY FOR STORING CONTROL INFORMATION, PLURALITY OF ADDRESSES, STATUS INFORMATION, RECEIVE ADDRESS INFORMATION, AND MESSAGE

Yiu-Wah Eric Cheng, Taipei; Wei-Jen Jim Du, Tainan County, and Shou-Yuan Richard Huang, Chung Ho, all of Taiwan, assignors to Motorola, Inc., Schaumburg, Ill.

Filed Jun. 19, 1995, Ser. No. 491,691

Int. Cl.[6] G06F *13/00*

U.S. Cl. 395—200.09 **13 Claims**

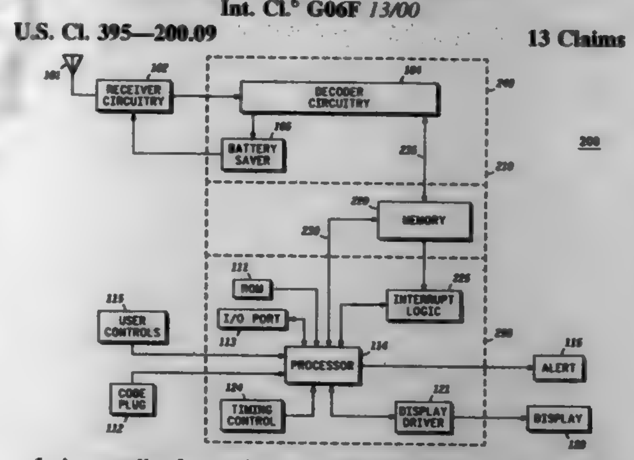

1. A controller for a selective call receiver having a plurality of addresses, and wherein the selective call receiver receives a selective call signal having one of the plurality of addresses and a message, the controller comprising:

a microcontroller having a parallel port for providing control information and the plurality of addresses, and for retrieving status information, receive address information and the message;

a memory having a first parallel port coupled to the parallel port of the microcontroller for storing the control information and the plurality of addresses from the microcontroller, and having a second parallel port, different from the first parallel port, for receiving the status information, the receive address information, and the message, and for storing the status information, the receive address information, and the message; and

a dedicated decoder having a parallel port coupled to the second parallel port of the memory for retrieving the control information and the plurality of addresses from the memory, having an input for coupling to a receiver and for receiving the selective call signal therefrom, the dedicated decoder for decoding the selective call signal in accordance with the control information in response to receiving the selective call signal, for storing the status information in the memory when receiving and decoding the selective call signal, and the dedicated decoder for storing the receive address information in the memory in response to detecting the one of the plurality of addresses in the selective call signal, and for decoding and storing the message in the memory.

5,701,415

METHOD FOR CREATING STUB FILE SUPPORTING REMOTE PROCEDURE CALLS BY GENERATING COMMON CODE INCLUDING CODE UTILIZED BY STUB PROCEDURES TO INVOKE PLURALITY OF SERVICE PROCEDURES

Yi-Hsiu Wei, Austin, Tex., assignor to International Business Machines Corporation, Armonk, N.Y.

Continuation of Ser. No. 949,294, Sep. 22, 1992, Pat. No. 5,526,491. This application Mar. 20, 1996, Ser. No. 619,111

Int. Cl.[6] G06F *13/00*

U.S. Cl. 395—200.09 **9 Claims**

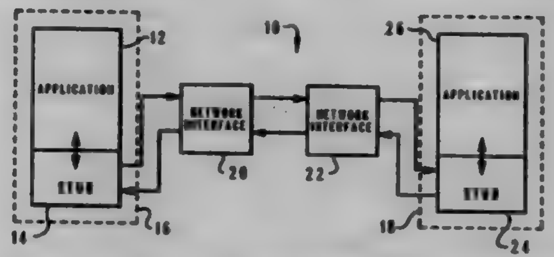

5. A method of creating a stub file within a computer network supporting remote procedure calls, wherein said stub file includes one or more stub procedures utilized by an application to invoke a plurality of service procedures available on said computer network, said method comprising:

generating a common code block including initialization and finalization code utilized by said one or more stub procedures to invoke said plurality of service procedures;

providing a plurality of selectable blocks of code, wherein each of said selectable blocks of code corresponds to at least one of said plurality of service procedures; and

selecting one of said selectable blocks of code, wherein said selected one of said selectable blocks of code and said common code block are utilized to invoke one of said plurality of service procedures.

5,701,416

ADAPTIVE ROUTING MECHANISM FOR TORUS INTERCONNECTION NETWORK

Gregory M. Thorson, Altoona, and Steven L. Scott, Eau Claire, both of Wis., assignors to Cray Research, Inc., Eagan, Minn.

Filed Apr. 13, 1995, Ser. No. 421,566

Int. Cl.[6] G06F *15/16*

U.S. Cl. 395—200.15 **22 Claims**

22. A routing mechanism for routing packets coming information to be transferred between nodes in an n-dimensional networked system, the routing mechanism comprising:

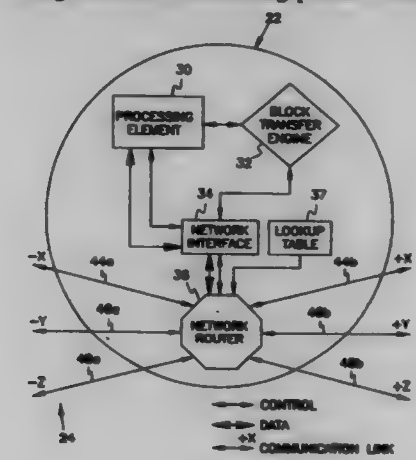

two acyclic non-adaptive virtual channels having virtual channel buffers to store the packets along deterministic virtual paths between the nodes;

an adaptive virtual channel having virtual channel buffers to store the packets along non-deterministic virtual paths between the nodes;

means for routing the packets between the nodes along either selected portions of the deterministic virtual paths or selected portions of the non-deterministic virtual paths, wherein a packet is never routed on a selected portion of one of the non-deterministic virtual paths unless the virtual channel buffer associated with the selected portion of the one non-deterministic virtual path has sufficient space available to store the entire packet.

5,701,417

METHOD AND APPARATUS FOR PROVIDING INITIAL INSTRUCTIONS THROUGH A COMMUNICATIONS INTERFACE IN A MULTIPLE COMPUTER SYSTEM

Ian D. Lewis, Seattle, and Preston A. Hauck, Redmond, both of Wash., assignors to Microstar Laboratories, Redmond, Wash.

Filed Mar. 27, 1991, Ser. No. 676,167

Int. Cl.[6] G06F *1/24;15/16*

U.S. Cl. 395—200.16 **20 Claims**

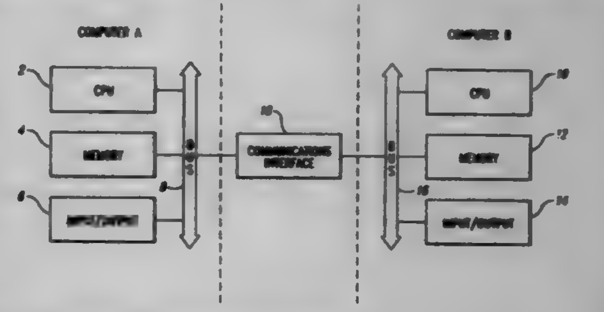

1. A computer system, comprising:

a first computer;

a second computer having stored therein a plurality of initial instructions for said first computer

communications interface means operatively connected to said first and second computers for allowing communication between said first and second computers;

transfer means for transferring said plurality of initial instructions from said second computer to said communications interface;

reset means controlled by said second computer for resetting said first computer; and

decoding means operatively associated with said first computer for addressing said communications interface when said first computer outputs an address falling within the address space of said initial instructions whereby said first computer obtains its initial instructions from said second computer through said communications interface.

5,701,418

INTRA-VEHICULAR LAN AND METHOD OF ROUTING MESSAGES ALONG IT USING HASH FUNCTIONS

William V. Luitje, Ann Arbor, Mich., assignor to Chrysler Corporation, Auburn Hills, Mich.

Filed Mar. 31, 1994, Ser. No. 221,822

Int. Cl.[6] G06F *12/10*

U.S. Cl. 395—200.16 **17 Claims**

1. A control system comprising:

at least two microcontrollers for processing information to control parts of the system, each said microcontroller generating

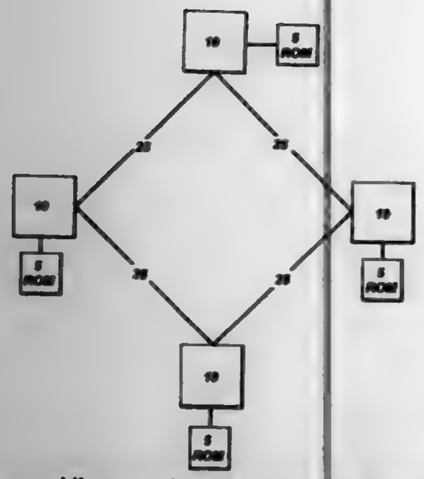

messages while processing the information which are related to the status of said controlled parts and receiving messages related to the status of said controlled parts of the system controlled by another microcontroller, each such message being identified with a message identifier;

memory means associated with each microcontroller, said memory means storing a table of message identifiers which the associated microcontroller is capable of processing and related instructions for processing the message;

a local area network connecting said at least two microcontrollers, said local area network transmitting messages to all said at least two controllers; and

means at each microcontroller for applying a hash function to the identifier of each message received over the local area network in order to generate a table index which directs the microcontroller to a particular entry in the table stored in the memory means, comparing the message identifier at the particular entry to the message identifier of the message received, and causing the microcontroller to respond to the message if the identifiers match.

5,701,419

TELECOMMUNICATIONS SERVICE CREATION APPARATUS AND METHOD

Von K. McConnell, Springfield, Va., assignor to Bell Atlantic Network Services, Inc., Arlington, Va.

Continuation of Ser. No. 846,228, Mar. 6, 1992, abandoned. This application Aug. 31, 1994, Ser. No. 298,081

Int. Cl.⁶ G06F *17/60;* **H04M** *3/42*

U.S. Cl. 395—227 **27 Claims**

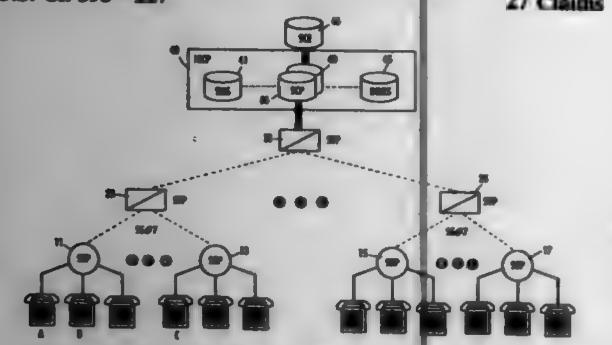

1. A public communications terminal for advertising or ordering services offered by an Advanced Intelligent Network (AIN) telephone system having an integrated service control point (ISCP) operatively connected via control-signal channels to Service Switching Points (SSP), and a service creation environment (SCE), said terminal comprising:

a connection to a servicing telephone landline contained in said AIN and connected to an SSP;

a display, including video and audio output devices, and configured to graphically display a region having a plurality of separate areas and served by a plurality of separate user facilities, each said user facility being associated with a unique subscriber telephone line other than said servicing telephone landline;

a processor including storage means for storing operating and program data;

said processor being responsive to said data for controlling said video/audio output means to present to a user of said terminal a video/audio depiction of available services for service selection and input of parameters;

input means associated with said video output means and responsive to actuation by a user for generating signals defining selection and parameter inputs by said user wherein, responsive to actuation by the user, an area within a displayed region to be served by an associated one of the plurality of separate facilities is selectable;

interface means for receiving said signals and translating said signals into data defining services and service parameters, and for storing said data in said storage means; and

means for downloading said data to said SCE through said ISCP to effect service changes to the associated subscriber telephone lines other than said servicing telephone landline, wherein service is changeable such that service orders originating from a selected area are directed to the facility associated with said selected area.

5,701,420

METHOD FOR INITIALIZING AN ARRAY OF CONFIGURABLE COMPONENTS

David J. Nedwek; Howard Wilson, both of Beaverton; Steve Nugent, and Greg Dermer, both of Portland, all of Oreg., assignors to Intel Corporation, Santa Clara, Calif.

Continuation of Ser. No. 227,598, Jul. 20, 1994, abandoned. This application Nov. 5, 1996, Ser. No. 744,123

Int. Cl.⁶ G06F *15/16*

U.S. Cl. 395—284 **4 Claims**

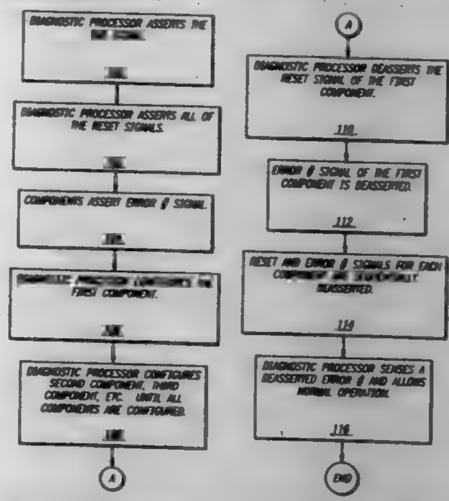

1. A method for configuring a plurality of configurable components within a computer system, comprising the steps of:

a) asserting a test mode signal (TMS) to switch the computer system from a normal mode to a test mode;

b) asserting a first RESET signal for a first configurable component and a second RESET signal for a second configurable component;

c) asserting a first ERROR # signal by said first configurable component, wherein said first ERROR # signal is indicative of an inactive state of said first configurable component;

d) asserting a second ERROR # signal by said second configurable component, wherein said second ERROR # signal is indicative of an inactive state of said second configurable component;

e) loading a configuration data string into said first configurable component;

f) loading a configuration data string into said second configurable component;

g) deasserting said first RESET signal;

h) deasserting said first ERROR # signal;

i) deasserting said second RESET signal;

j) deasserting said second ERROR # signal; and,

k) deasserting said TMS signal to switch the computer system from the test mode to the normal mode.

5,701,421

PIN AND STATUS BUS STRUCTURE FOR AN INTEGRATED CIRCUIT

Gary Lynn Miller, Round Rock; Vernon Bernard Goler, and Timothy Ernest Litch, both of Austin, all of Tex., assignors to Motorola, Inc., Schaumburg, Ill.

Filed Nov. 13, 1995, Ser. No. 555,961

Int. Cl.⁶ G06F *13/00*

U.S. Cl. 395—309 **12 Claims**

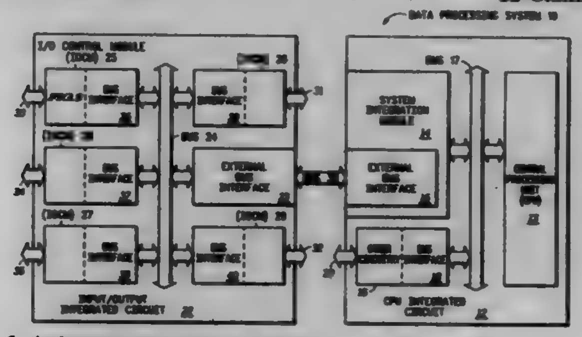

1. A timer processor, comprising:

a first integrated circuit bonding pad;

a second integrated circuit bonding pad;

a first work channel;

a second work channel;

a third work channel;

a first pin/status bus comprising:

a first pin information conductor; and

a first pin/status information conductor;

a second pin/status bus comprising:

a second pin information conductor; and

a second pin/status information conductor; and

control means for selectively transferring information between said first work channel and said first integrated circuit bonding pad via said first pin information conductor, for selectively transferring information between said first work channel and said second integrated circuit bonding pad via said first pin/status information conductor, for selectively transferring information between said first work channel and said second work channel via said first pin/status conductor, and for selectively transferring information between said first work channel and said third work channel via said first and second pin/status conductors, said control means being coupled to said first and second integrated circuit bonding pads, said first and second and third work channels, and said first and second pin/status buses.

5,701,422

METHOD FOR ENSURING CYCLE ORDERING REQUIREMENTS WITHIN A HIERARCHICAL BUS SYSTEM INCLUDING SPLIT-TRANSACTION BUSES

James B. Kirkland, Jr., West Columbia, S.C., and Edward A. McDonald, Baton Rouge, La., assignors to NCR Corporation, Dayton, Ohio

Filed Dec. 13, 1995, Ser. No. 573,217

Int. Cl.⁶ G06F *13/00;13/38*

U.S. Cl. 395—309 **7 Claims**

1. In a processing system including a first split transaction bus, a system memory connected to said first split transaction bus, a

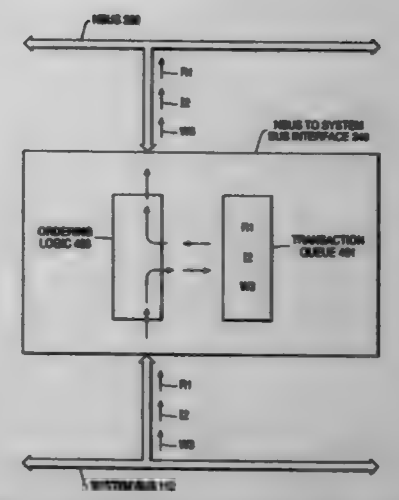

second split transaction bus, a bus agent including a cache memory connected to said second split transaction bus, and an interface unit connecting said first and second split transaction busses for transferring bus cycles between said first and second split-transaction busses, said system employing a simple post signal negation procedure for indicating write completions, a method for ordering bus cycles directed from said first split transaction bus to said second split transaction bus, said method comprising the steps of:

recording read cycles and cache line invalidate cycles directed from said first split transaction bus to said second split transaction bus into a queue within said interface unit;

sequentially transferring said read cycles and cache line invalidate cycles to said second split transaction bus, said read cycles and cache line invalidate cycles being transferred in the order they were recorded into said queue; and

transferring write completion cycles received by said interface unit from said first split transaction bus to said second split transaction bus immediately upon receipt of said write completion cycles received by said interface unit.

5,701,423

METHOD FOR MAPPING, TRANSLATING, AND DYNAMICALLY RECONCILING DATA BETWEEN DISPARATE COMPUTER PLATFORMS

Keith Crozier, Acton, Mass., assignor to Puma Technology, Inc., San Jose, Calif.

Division of Ser. No. 867,167, Apr. 10, 1992, Pat. No. 5,392,390. This application Apr. 7, 1994, Ser. No. 224,329

Int. Cl.⁶ G06F *17/30*

U.S. Cl. 395—335 **15 Claims**

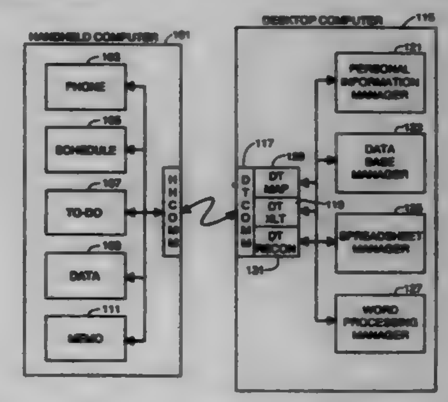

1. A computer implemented method for translating computer data from a source record structure, in which information in a source file is arranged, to a destination record structure different from said source record structure, each of said source and destination record structures comprising a plurality of fields, each having a name, the method comprising

(a) presenting the names of the fields of each of said source and destination record structures on a display,
(b) allowing a user to interactively select a field from said source record structure and a corresponding field from said destination record structure, thereby establishing a mapping between said fields, and
(c) translating the information of the source file, which is arranged in said source record structure, into a form compatible with said destination record structure in accordance with said mapping,

wherein said destination record structure differs from said source record structure in at least one of the following ways:
(a) field name, or
(b) field order, or
(c) one-to-many or many-to-one field correspondence, wherein said source file exists on a first computer and said destination record structure is specified by a program for execution on a second computer.

5,701,424
PALLADIAN MENUS AND METHODS RELATING THERETO
Robert G. Atkinson, Woodinville, Wash., assignor to Microsoft Corporation, Redmond, Wash.
Continuation of Ser. No. 909,163, Jul. 6, 1992, abandoned. This application Jun. 6, 1995, Ser. No. 447,960
Int. Cl.[6] G06F *3/00*
U.S. Cl. 395—353 **28 Claims**

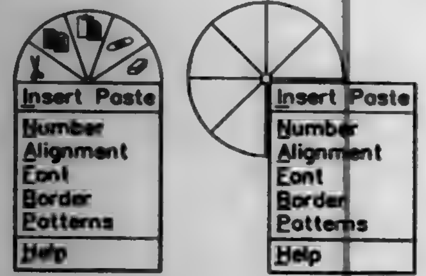

18. A computer readable memory medium containing instructions for controlling a computer system to display a menu on a display device by performing the steps of:
storing in the computer readable memory a plurality of user options for controlling the computer system;
generating the menu from the stored options;
displaying on a portion of the display device a radial portion of the menu having a center and containing selectable options located radially from the center of the radial portion; and
displaying a rectangular portion of the menu overlapping the radial portion and containing a list of selectable options.

5,701,425
DATA PROCESSOR WITH FUNCTIONAL REGISTER AND DATA PROCESSING METHOD
Shigeru Nakahara, Ohme, Japan, assignor to Hitachi, Ltd., Tokyo, Japan
Continuation of Ser. No. 115,207, Sep. 1, 1993, abandoned. This application Aug. 28, 1996, Ser. No. 704,362
Claims priority, application Japan, Sep. 21, 1992, 4-276665
Int. Cl.[6] G06F *1/04*
U.S. Cl. 395—376 **24 Claims**

1. A data processor for executing processing procedures responsive to instructions which include single instructions each having (i) an operation code portion and (ii) a specifying data portion, the data processor comprising:
a plurality of function registers each of which is dedicated to a pre-defined processing procedure, the pre-defined processing procedures being different from each other, at least one of the

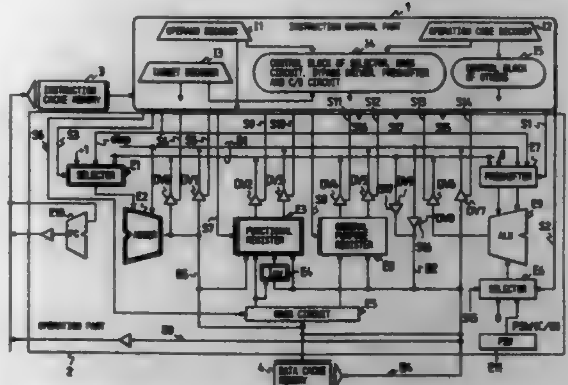

function registers being specified by the specifying data portion of a single instruction;
accessing means responsive to the specifying data portion of the single instruction for accessing the function register;
processing means responsive, independent of the operational code portion, to one of (i) a write access for writing write data to the function register and (ii) a read access for reading read data from the function register, for executing the pre-defined processing procedure which is dedicated to the specified function register for one of the write data to be written to the function register and the read data to be read from the function register.

5,701,426
DATA PROCESSING SYSTEM AND METHOD USING CACHE MISS ADDRESS PREDICTION AND FORCED LRU STATUS IN A CACHE MEMORY TO IMPROVE CACHE HIT RATIO
Charles P. Ryan, Phoenix, Ariz., assignor to Bull Information Systems Inc., Billerica, Mass.
Filed Mar. 31, 1995, Ser. No. 414,602
Int. Cl.[6] G06F *12/00;13/00*
U.S. Cl. 395—403 **2 Claims**

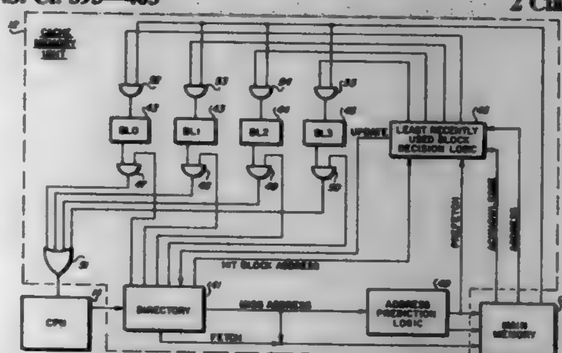

1. In a data processing system incorporating a processor running successive processes, a main memory for storing signal blocks, a cache memory for storing a plurality of blocks of information therein at a corresponding plurality of addresses and for supplying an information word group to said processor in response to a request from said processor supplying a word group address for said information word group, a first in, first out miss stack for storing a plurality of operand cache miss addresses and a least-recently-used stack for tracking the sequence of use of said plurality of blocks of information stored in said cache memory and for providing an ongoing indication of the least-recently-used block of information, a method comprising:
A) waiting for an occurrence of an operand cache miss resulting from an absence, in said cache memory, of called information requested from said cache memory by said processor, the called information having an address;
B) when an operand cache miss condition occurs, placing the address of the called information into said first in, first out miss stack;

C) examining said first in, first out miss stack for an address pattern among lower order potions of operand cache miss addresses resident therein;
D) if a pattern is not matched in step C), returning to step A); and
E) if a pattern is matched in step C):
1) using the matched pattern and at least one of the operand cache miss addresses stored in said first in, first out miss stack to calculate a predictive address identifying one of the signal blocks stored in said main memory;
2) prefetching into said cache memory from said main memory the block of information identified by the predictive address;
3) placing the prefetched block of information into said cache memory as the one of the blocks of information identified by said least-recently-used stack as the least recently used;
4) forcing said least-recently-used stack to continue to identify the block of information identified in step E)3) as the least recently used; and
5) returning to step A).

5,701,427
INFORMATION TRANSFER ARRANGEMENT FOR DISTRIBUTED COMPUTER SYSTEM
Alan Lathrop, Littleton, Mass., assignor to Digital Equipment Corp., Maynard, Mass.
Filed Sep. 19, 1989, Ser. No. 408,751
Int. Cl.[6] G06F *13/38*
U.S. Cl. 395—200.01 **53 Claims**

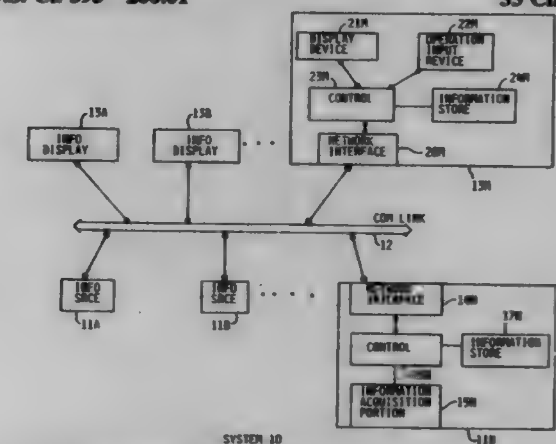

19. An information source means for use in a computer system of the kind in which said information source transmits information items to a plurality of information displays over a communications link, said information source including an interface for transmitting said information items and receiving original information item requests on said communications link and a controller, said controller comprising:
A. an original information transmission means for responding to an original information item request received from one of said information displays by said interface by generating the original information item requested by said one information display, designating said original information item for use by said one information display so that only said one information display will process and display said original information item, and causing said interface to transmit said original information item over said communications link;
B. an update information transmission means for generating update information items, designating said update information items for use by multiple information displays, and causing said interface to transmit said update information items over said communications link, each one of said update information items containing update information relating to original information item that was previously transmitted by said interface and being identified by said update information transmission means as an update thereof so that said update information item will be processed and displayed only by information displays that previously processed and displayed an original information item to which said update relates.

5,701,428

Patent Not Issued For This Number

5,701,429
METHOD AND SYSTEM FOR MAINTAINING CONCURRENT DATA ACCESS DURING DEVICE UPGRADE
Vernon J. Legvold, Tucson, Ariz.; Julia Liu, Sunnyvale, Calif.; Carol S. Michod, Tucson, Ariz.; Chan Yiu Ng, San Jose, Calif.; William G. Sherman, II, Tucson, Ariz.; Jeffrey R. Steffan, San Jose, and Steven R. Van Gundy, Gilroy, both of Calif., assignors to International Business Machines Corporation, Armonk, N.Y.
Continuation of Ser. No. 261,797, Jun. 20, 1994, abandoned. This application Aug. 16, 1996, Ser. No. 698,825
Int. Cl.[6] G06F *12/02*
U.S. Cl. 395—441 **13 Claims**

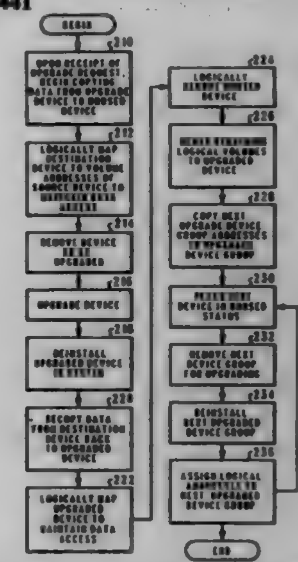

1. In a data storage system including a plurality of direct access storage devices, each having a fixed number of unique addresses and the same number of logical volumes, and a storage controller being connected to each of the plurality of direct access storage devices, a method of maintaining concurrent data access while upgrading at least one of said plurality of direct access storage devices containing data and coupled to a host computer via a channel comprising the steps of:
responsive to receipt of a request to upgrade said at least one of said plurality of direct access storage devices data over a channel, copying said data to another one of said plurality of direct access storage devices having no data;
logically mapping said fixed number of unique addresses of said at least one of said plurality of direct access storage devices to said another one of said plurality of direct access storage devices to which said data has been copied;
removing said at least one of said plurality of direct access storage devices;
upgrading said at least one of said plurality of direct access storage devices with a direct access storage device having a greater number of unique addresses;
reconfiguring said storage controller to accommodate said greater number of unique addresses;
recopying said data to said upgraded direct access storage device into said greater number of unique addresses; and
logically remapping said unique addresses of said another of said plurality of direct access storage devices to said greater

number of unique addresses of said upgraded direct access storage to which said data has been recopied.

5,701,430

CROSS-CACHE-LINE COMPOUNDING ALGORITHM FOR SCISM PROCESSORS

Thomas Leo Jeremiah, Endwell, and Bartholomew Blaner, Newark Valley, both of N.Y., assignors to International Business Machines Corporation, Armonk, N.Y.

Continuation of Ser. No. 875,507, Apr. 29, 1992, abandoned, and Ser. No. 281,321, Jul. 27, 1994, Pat. No. 5,446,850, which is a continuation-in-part of Ser. No. 642,011, Jan. 15, 1991, Pat. No. 5,295,249, and Ser. No. 677,685, Mar. 29, 1991, Pat. No. 5,303,356. This application Jun. 7, 1995, Ser. No. 483,419

Int. Cl.⁶ G06F *12/12*

U.S. Cl. 395—445 **2 Claims**

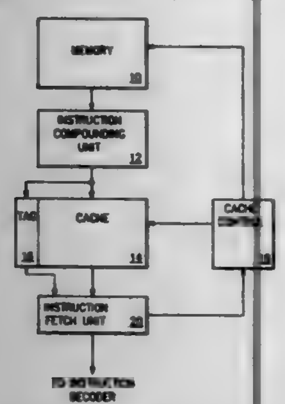

1. A data processing system in which instructions are transferred in blocks comprised of a plurality of instruction lines from a relatively low speed memory to a relatively high speed cache memory and from which cache memory instructions are fetched for execution and from which cache memory lines are deleted a line at a time, said system including an instruction compounding unit in which instructions are processed in order to generate tag information that indicates instructions that can be executed in parallel including instructions at adjacent address locations on opposite sides of a boundary between two successive instruction lines in a block, said data processing system comprising in combination:

means to address a first instruction line at a first line index address in said cache memory in order to transfer instructions from said first instruction line from said cache memory to an instruction fetch unit;

means to generate a miss signal if said first instruction line is not resident in said high speed cache memory;

means responsive to said miss signal for transferring said first instruction line from said relatively low speed memory to said instruction compounding unit;

means responsive to said miss signal for determining a line index address of a second instruction line with an instruction at an address location adjacent an address location in said first instruction line;

means for transferring from said cache instructions from said second instruction line to said instruction compounding unit if said second instruction line resides in said cache memory; and

said instruction compounding unit processing instructions from said first instruction line and said second instruction line in order to generate tag information indicating an instruction in said first instruction line that can be executed in parallel with an instruction in said second instruction line.

5,701,431

METHOD AND SYSTEM FOR RANDOMLY SELECTING A CACHE SET FOR CACHE FILL OPERATIONS

Bruce Ernest Whittaker, Mission Viejo, Calif., assignor to Unisys Corporation, Blue Bell, Pa.

Filed Jan. 26, 1996, Ser. No. 592,090

Int. Cl.⁶ G06F *12/08;11/16*

U.S. Cl. 395—455 **4 Claims**

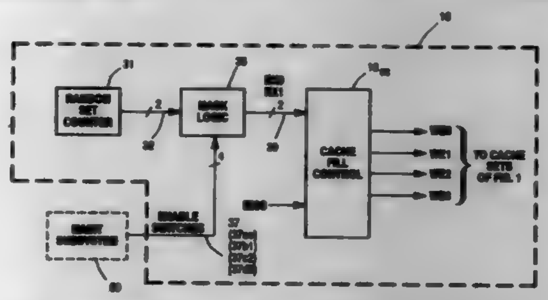

1. In a network for selecting which one of N cache sets of a cache module will be filled during a write-fill operation, a system for equitably filling those on-line cache sets in full operation or degraded operation comprising:

(a) a multiple group of N cache sets forming a cache module to a central processor;

(b) mask logic means for developing a resultant signal for selecting only those cache sets reining on-line for a data fill operation and including:

(b1) means to equitably distribute said fill data among those cache sets remaining on-line.

5,701,432

MULTI-THREADED PROCESSING SYSTEM HAVING A CACHE THAT IS COMMONLY ACCESSIBLE TO EACH THREAD

Thomas K. Wong, Pleasanton, and Theron D. Tock, Sunnyvale, both of Calif., assignors to Sun Microsystems, Inc., Mountain View, Calif.

Filed Oct. 13, 1995, Ser. No. 543,105

Int. Cl.⁶ G06F *12/14*

U.S. Cl. 395—457 **26 Claims**

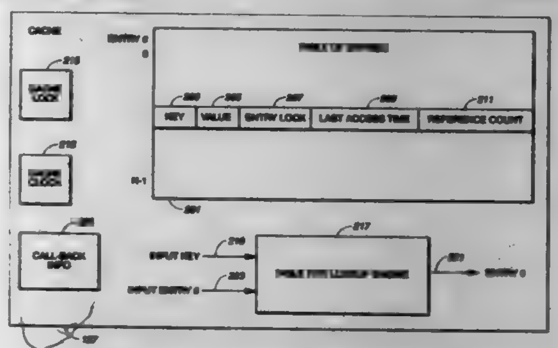

1. In a multi-threaded processing system having a cache that is commonly accessible to each thread, a method of locating an item in the cache, wherein the cache has a plurality of entries for storing items, each entry being identified by an entry number, and wherein the item includes a first key, the method comprising the steps of:

a) supplying the first key to a lockless-lookup engine;

b) using the lockless-lookup engine to provide a lookup output that is a lookup entry number; and

c) determining whether the item is stored at the entry associated with the lookup entry number, wherein the step of determining comprises the steps of:

acquiring a mutual exclusion lock that grants exclusive access at least to the entry designated by the lookup entry number;

using the lookup entry number to read a stored key from the entry designated by the lookup entry number; and

comparing the first key with the stored key, wherein if the first key matches the stored key, then the item is stored at the entry associated with the lookup entry number.

5,701,433

COMPUTER SYSTEM HAVING A MEMORY CONTROLLER WHICH PERFORMS READAHEAD OPERATIONS WHICH CAN BE ABORTED PRIOR TO COMPLETION

Michael P. Moriarty, Spring, and John E. Larson, Katy, both of Tex., assignors to Compaq Computer Corporation, Houston, Tex.

Continuation of Ser. No. 323,150, Oct. 14, 1994, abandoned. This application Sep. 30, 1996, Ser. No. 727,178

Int. Cl.⁶ G06F *12/00;13/00*

U.S. Cl. 395—481 **6 Claims**

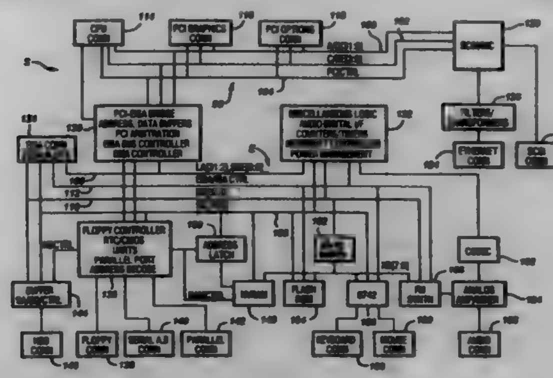

1. A computer system, comprising:

main memory for holding memory data, wherein said main memory is a predetermined width;

a processor;

an input/output bus;

a peripheral storage device coupled to said input/output bus, said peripheral storage device storing data and providing said data as memory data;

a bus master coupled to said input/output bus and providing a plurality of memory read cycle types over said input/output bus for accessing the memory data, the plurality of memory read cycle types including a type requesting a series of main memory read operations, wherein each main memory read operation reads data of a 2^n multiple of said predetermined width as a series of individual read operations of said predetermined width, said bus master further providing an indication that a pending main memory read cycle is being aborted; and

a memory controller coupled to said processor, said input/output bus and said main memory for controlling operation of said main memory in response to received cycles, said memory controller comprising:

an input/output bus interface circuit for determining the provision from said bus master of the memory read cycle type requesting a series of read operations and further adapted to determine if said pending main memory read cycle abort indication is provided from said bus master;

memory control logic coupled to said input/output bus interface circuit for initiating a first main memory read operation upon determination by said input/output bus interface circuit of provision of the memory read cycle type requesting a series of main memory read operations, said memory control logic being capable of repeatedly initiating a later main memory read operation before completion of providing the data read in the first main memory read operation or an immediately prior later main memory read operation to said input/output bus; and

memory read termination logic coupled to said input/output bus interface circuit and configured to terminate said later main memory read operations before completion of said later main memory read operations upon determination by said input/output bus interface circuit of provision of said pending main memory read cycle abort indication;

wherein said memory read termination logic is further configured to terminate said later main memory read operation upon completion of an individual read operation of said predetermined width.

5,701,434

INTERLEAVE MEMORY CONTROLLER WITH A COMMON ACCESS QUEUE

Takayuki Nakagawa, Hadano, Japan, assignor to Hitachi, Ltd., Tokyo, Japan

Filed Mar. 16, 1995, Ser. No. 405,190

Int. Cl.⁶ G06F *13/00*

U.S. Cl. 395—484 **28 Claims**

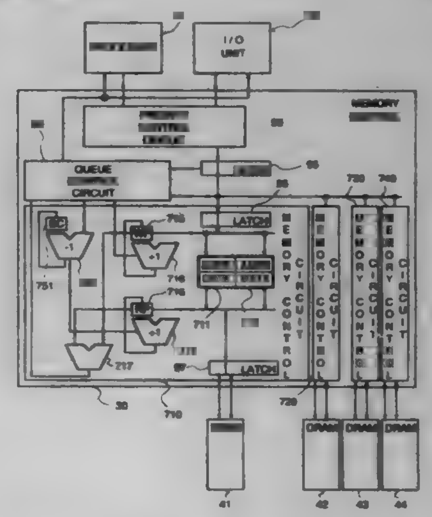

1. A memory control circuit comprising:

means for receiving access requests entered from outside said memory control circuit and issued to an interleaved memory having a plurality of banks;

a single access queue connected to said means and storing the access requests commonly for said plurality of banks; and

means controlling said access queue for storing the access requests while waiting for said plurality of banks to be taken out of a wait state;

an access sequencing circuit reading the access requests from said access queue and assuring access sequence of the access requests;

a circuit for detecting that a first bank identified by a first access request in said means for receiving is idle;

a circuit for detecting that said access queue contains no access request addressed to said first bank; and

a bypass responsive to when said first bank is idle and when said access queue contains no access request addressed to said first bank, to transfer the first access request from said means for receiving to said first bank without passing the first access request through said access queue.

5,701,435
INSTRUCTION CACHE SYSTEM FOR IMPLEMENTING PROGRAMS HAVING NON-SEQUENTIAL INSTRUCTIONS AND METHOD OF IMPLEMENTING SAME

Chi-Hung Chi, Croton-on-Hudson, N.Y., assignor to Philips Electronics North America Corporation, New York, N.Y.
Continuation of Ser. No. 500,612, Mar. 27, 1990, abandoned. This application May 19, 1993, Ser. No. 63,845
Int. Cl.[6] G06F *12/12*
U.S. Cl. 395—486 **5 Claims**

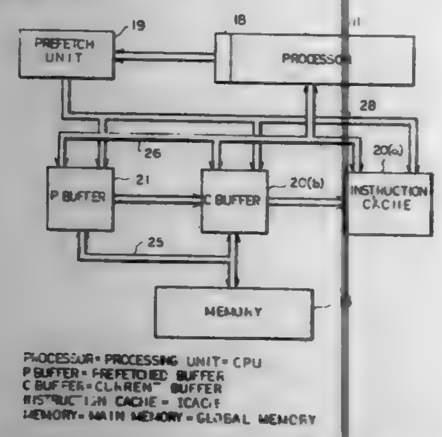

1. In a processing system for executing program instructions stored in a memory and forming subgroups of blocks of instructions, at least one of said blocks including a group of instructions which are repeatedly executed, a system for improving execution efficiency of said program comprising:

an instruction cache for storing a minor number of instructions of a block of said instructions; and

a prefetch processor programmed to sequentially fetch a number of instructions of said program from the memory and store the number of instructions in said instruction cache, said processor controlling said cache to freeze a portion of said cache containing said instructions which are repeatedly executed, while prefetching sequentially remaining instructions of said program, said prefetch processor being operative to inspect instructions, fetched from the memory to control the freezing.

5,701,436
INFORMATION PROCESSING APPARATUS INCLUDING SYNCHRONOUS STORAGE HAVING BACKUP REGISTERS FOR STORING THE LATEST SETS OF INFORMATION TO ENABLE STATE RESTORATION AFTER INTERRUPTION

Tetsuro Nagashima; Toshiharu Kawanishi; Shigeaki Okutani; Osamu Nomura, and Takashi Iino, all of Kawasaki, Japan, assignors to Fujitsu Limited, Kawasaki, Japan
Filed Jul. 28, 1995, Ser. No. 508,685
Claims priority, application Japan, Jan. 31, 1995, HEI 7-013667
Int. Cl.[6] G06F *11/20;12/00*
U.S. Cl. 395—489 **4 Claims**

2. An information processing apparatus having a synchronous storage having an address data register and a data input register operating in synchronism with a system clock, comprising:

an address backup register for storing at all times the latest one among address information having been transferred to said address data register in synchronism with the system clock during a normal operation;

a data backup register for storing at all times the latest one among write data information having been transferred to said data input register in synchronism with the system clock during the normal operation; and

switching means for outputting information stored in said address backup register and said data backup register to said address data register and said data input register in said synchronous storage when the normal operation is resumed

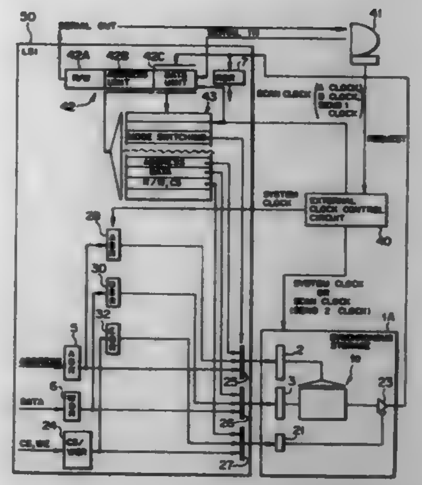

after the normal operation has been interrupted and an access has been had to said synchronous storage with a clock different from the system clock, thereby restoring said address data register and said data input register in said synchronous storage to the same conditions as before the interruption of the normal operation.

5,701,437
DUAL-MEMORY MANAGING APPARATUS AND METHOD INCLUDING PRIORITIZATION OF BACKUP AND UPDATE OPERATIONS

Morishige Kinjo, and Eiji Ishibashi, both of Tokyo, Japan, assignors to Kabushiki Kaisha Toshiba, Kawasaki, Japan
Continuation of Ser. No. 130,508, Oct. 1, 1993, abandoned. This application Sep. 10, 1996, Ser. No. 710,088
Claims priority, application Japan, Oct. 2, 1992, 4-264565
Int. Cl.[6] G06F *11/16;12/16*
U.S. Cl. 395—489 **10 Claims**

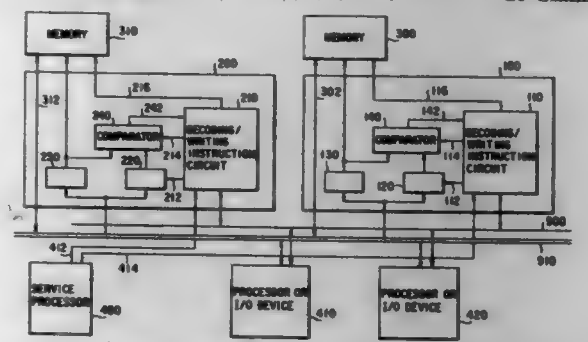

1. A dual-memory managing apparatus including a plurality of dual-memory managing devices, each of which connected between a corresponding one of a plurality of memories and a data bus, and in which a plurality of processors are connected to the data,bus, and applied to a system constituted such that identical data are stored in said plurality of memories, said dual-memory managing apparatus performing control when a memory copy operation is performed from at least one first memory to at least one second memory, each of said plurality of dual-memory managing devices comprising:

means for performing the memory copy operation for each word; and

when write access of said plurality of processors to said plurality of memories is performed at almost the same timing as that of the memory copy operation, control means for concurrently performing the memory write access and the memory copy operation when an address of the write access is different from an address subjected to the memory copy operation, and for preferentially performing the write access when the write address is identical to the address subjected to the memory copy operation.

5,701,438
LOGICAL RELOCATION OF MEMORY BASED ON MEMORY DEVICE TYPE

Kuljit S. Bains, Folsom, Calif., assignor to Intel Corporation, Santa Clara, Calif.
Filed Sep. 29, 1995, Ser. No. 536,239
Int. Cl.[6] G06F *12/06*
U.S. Cl. 395—497.01 **43 Claims**

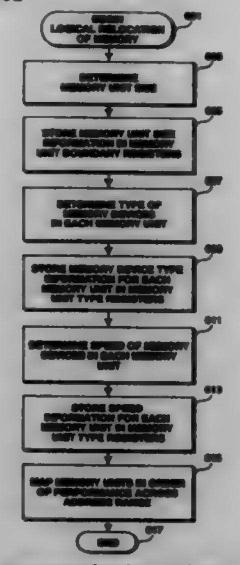

1. In a computer system having a bus coupled to address a plurality of memory units, the bus communicating memory address control signals addressing a predetermined address range, an improvement comprising:

logic means for determining at least the fastest of the memory units; and

mapping means responsive to the logic means for redirecting the memory address control signals on the bus such that the fastest of the memory units is addressed by addresses at one end of the address range.

5,701,439
COMBINED DISCRETE-EVENT AND CONTINUOUS MODEL SIMULATION AND ANALYSIS TOOL

David C. James, Downey; John R. Clymer, Placentia; Philip D. Corey, Placentia, and Nafise Nili, Placentia, all of Calif., assignors to Boeing North American, Inc., Seal Beach, Calif.
Filed Mar. 30, 1992, Ser. No. 860,654
Int. Cl.[6] G06F *9/455*
U.S. Cl. 395—500 **14 Claims**

1. A method for analysis of an application specific system using

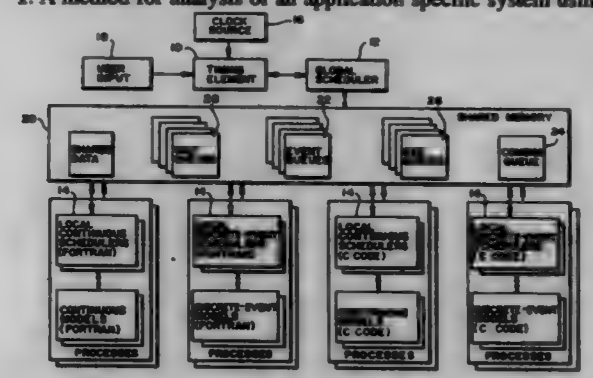

combined discrete event and continuous model simulation, comprising the steps of:

a. providing a first software component, serving as a timing element, for receiving global synchronization commands as input and issuing global simulation scheduler task dispatch commands as output;

b. providing a second software component, serving as a global simulation scheduler, for receiving said global simulation scheduler task dispatch commands as input, synchronizing discrete event model and continuous model task dispatch as a function of simulation time, and issuing local simulation scheduler task dispatch commands as output; and

c. providing at least a single third software component, serving as a local simulation scheduler, for receiving said local simulation scheduler task dispatch commands as input and issuing local simulation task execution commands as output;

the combination of these steps providing a processing environment wherein said local simulation task execution commands invoke user supplied simulation application tasks in a time synchronized manner;

wherein said first software component executes a simulation loop in real-time and includes the steps of:

i) waiting for a global synchronization command from a clock source or the user, said command occurring at a point in time in the real world which has been predetermined by the global simulation scheduler;

ii) terminating the simulation loop if any previously started task, scheduled to complete at or prior to the current time, has failed to complete;

iii) terminating the simulation loop if a simulation termination condition is true;

iv) issuing a global simulation scheduler task dispatch command; and

v) returning to step i.

5,701,440
MULTI-PROCESSOR SYSTEM PROVIDED WITH BUS CONTROL MODULE

Chang-young Kim, Seoul, Rep. of Korea, assignor to Samsung Electronics Co., Ltd., Kyungki-do, Rep. of Korea
Filed Apr. 18, 1995, Ser. No. 424,002
Claims priority, application Rep. of Korea, Jan. 19, 1995, 95-845
Int. Cl.[6] G06F *9/455*
U.S. Cl. 395—500 **1 Claim**

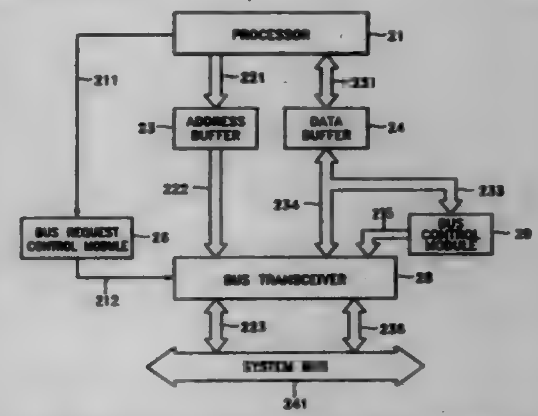

1. A multi-processor system provided with multiple processor boards having different protocols and sharing data via a system bus, each of said processor boards comprising:

a processor for transmitting and receiving a data signal together with a specific information signal that fits a specific protocol; and

a bus control module for converting a byte mask signal to be assigned one bit per byte to designate validity of data output by said processor into a transfer size signal (TS), a transfer type signal (TT) for representing data transfer type, and a low-ordered address signal (LOA) for indicating a starting bit of valid data to be transmitted and transmitting the result to the system bus together with the data signal, when data is transferred from said processor to the system bus, and when data is transferred from the system bus to said processor, converting the TT, TS and LOA signals into a byte mask

signal and transmitting the result to said processor together with the data signal, the TT signal including either a single transfer type signal in which data having a smaller size than a data line of the system bus is transferred, or a block transfer type in which data having a larger size than the data of the system bus is transferred.

5,701,441

COMPUTER-IMPLEMENTED METHOD OF OPTIMIZING A DESIGN IN A TIME MULTIPLEXED PROGRAMMABLE LOGIC DEVICE

Stephen M. Trimberger, San Jose, Calif., assignor to Xilinx, Inc., San Jose, Calif.

Filed Aug. 18, 1995, Ser. No. 516,910

Int. Cl.⁶ G06F *17/50*

U.S. Cl. 395—500 **9 Claims**

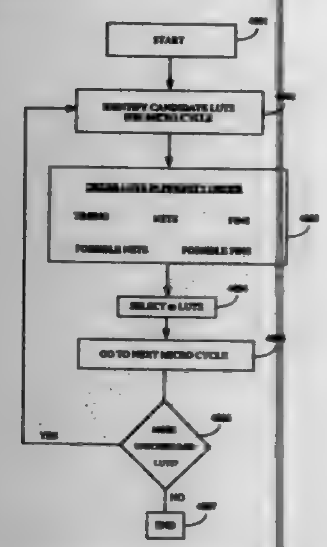

1. A computer-implemented method of optimizing a design in a time multiplexed programmable logic device comprising:

(a) identifying a micro cycle;

(b) identifying all look-up tables (LUTs) from a list of LUTs of said design that may be scheduled in said micro cycle;

(c) ordering said LUTs in priority order;

(d) selecting the M LUTs with the highest priority, wherein M is the number of real LUTs in said programmable logic device;

(e) labeling said M LUTs with the current micro cycle number;

(f) removing said M LUTs from said list;

(g) identifying the next micro cycle; and

(h) if un-labelled LUTs exist, then repeating (a)–(h), otherwise exiting said computer-implemented method.

5,701,442

METHOD OF MODIFYING AN INSTRUCTION SET ARCHITECTURE OF A COMPUTER PROCESSOR TO MAINTAIN BACKWARD COMPATIBILITY

Ronny Ronen, Haifa, Israel, assignor to Intel Corporation, Santa Clara, Calif.

Filed Sep. 19, 1995, Ser. No. 530,614

Int. Cl.⁶ G06F *9/30*

U.S. Cl. 395—500 **13 Claims**

1. A method of processor architecture modification comprising the steps of:

(a) defining an instruction set architecture (ISA) for a current generation processor which includes a plurality of no-operation instructions (NOPs) having no associated semantics, and wherein execution of any one of the NOPs does not alter an architectural state of the processor;

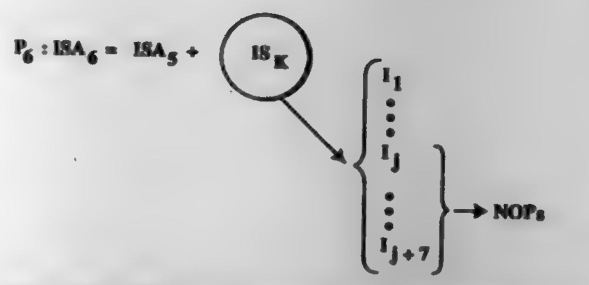

(b) waiting until software programs have been written that are compatible with the ISA and which run on the current generation processor;

(c) defining, for at least one of the NOPs, an associated semantic that implements a new instruction in a next generation processor, the next generation processor being an improvement of the current generation processor, such that a new software program that uses the new instruction and which runs on the next generation processor, also runs on the current generation processor.

5,701,443

SYSTEM FOR EVALUATING THE RESULTS OF LOGIC SIMULATION

Toshio Oguma, Ebina; Yoshinobu Okazaki; Osamu Tada, both of Hadano, and Shigeki Yokotani, Minamiashigara, all of Japan, assignors to Hitachi, Ltd., Tokyo, Japan

Continuation of Ser. No. 279,921, Jul. 25, 1994, abandoned. This application Apr. 29, 1996, Ser. No. 640,406

Claims priority, application Japan, Jul. 29, 1993, 5-188042

Int. Cl.⁶ G06F *17/50*

U.S. Cl. 395—500 **19 Claims**

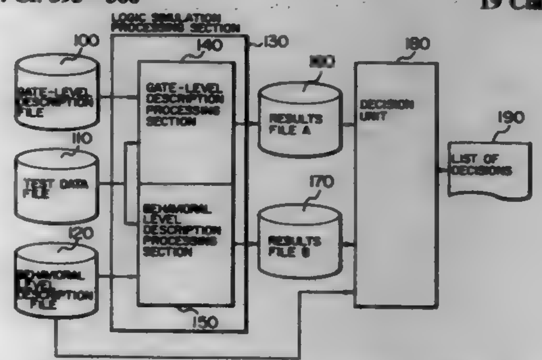

1. A logic simulation system for simulating quality of logic description of an electric circuit, comprising:

first storage means for storing results of a previously performed simulated operation of said electric circuit of which a predetermined operation is confirmed;

second storage means for storing a logic description of said electric circuit;

input means for inputting test data for testing said logic description;

execution means for executing a simulation of operation of said electric circuit in accordance with said test data and said logic description;

selection means for selecting one of a plurality of comparison operations for comparing results of the logic simulation executed by said execution means with the results of said previous simulated operation stored in said first storage means;

determination means for determining a quality of said logic description by comparing the results of the logic simulation executed by the execution means with the results of said stored previous simulated operation in accordance with a comparison operation selected by said selection means, said determination means including the plurality of comparison operations, one of which is a full matching of the test data with correct output results and the other taking an allowable time for each signal line into account; and

third storage means for storing selection information for selecting one of said plurality of comparison operations, wherein said selection means sends said selection information to said determination means.

5,701,444

THREE-DIMENSIONAL GRAPHICS SUBSYSTEM WITH ENHANCED SUPPORT FOR GRAPHICAL USER INTERFACE

David Robert Baldwin, Weybridge, United Kingdom, assignor to 3dLabs Inc. Ltd., Hamilton, Bermuda

Filed Mar. 24, 1995, Ser. No. 410,303

Int. Cl.⁶ G06T *1/20*

U.S. Cl. 395—506 **31 Claims**

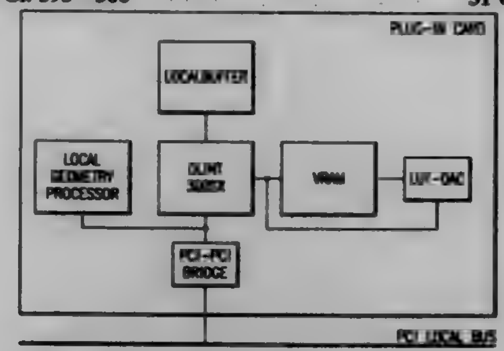

1. A rendering subsystem, comprising:

a plurality of rendering processor units, each having capability and local storage for switching between two independent contexts;

an input interface, which receives external commands and passes both 2D rendering tasks and 3D rendering tasks to said rendering processor units accordingly;

wherein plural ones of said rendering processor units maintain independent contexts for 2D rendering and for 3D rendering, and switch between said independent contexts to accommodate tasks passed by said input interface;

wherein said input interface prioritizes the 2D and 3D rendering tasks to ensure that the 2D rendering tasks are not excessively delayed by requests for 3D rendering tasks.

5,701,445

GENERATING MULTILAYERED PICTURES BY IMAGE PARAMETERS

Alex Tang, Hsinchu, and Frank Chu, Hsinchu Hsien, both of Taiwan, assignors to United Microelectronics Corp., Taiwan, Taiwan

Filed Sep. 25, 1995, Ser. No. 533,344

Int. Cl.⁶ G06F *12/06*

U.S. Cl. 395—516 **7 Claims**

1. An apparatus for generating pictures comprising:

a memory device;

an address generator coupled to said memory device for generating address signals;

a vertical position detector coupled to said address generator for controlling the generation of said address signals;

a first register for storing parameters selected from said memory device by said address signals;

a horizontal position counter for detecting a horizontal position of a picture determined by said parameters;

a processor for processing said parameters; and

a state machine for controlling said memory device, said address generator, said vertical position detector, said first register, said horizontal position counter and said processor, wherein said address generator comprises:

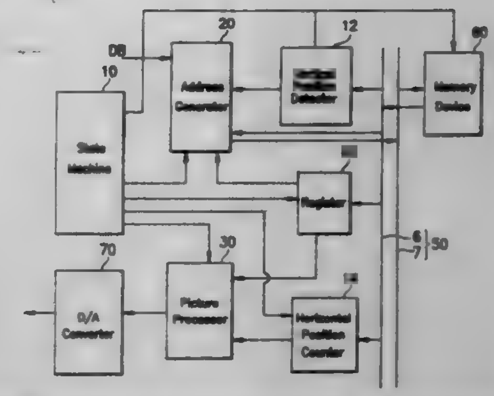

a picture address generator for generating a parameter address; and

a parameter address generator for generating a color code address.

5,701,446

METHOD FOR FINE GRAIN ADJUSTMENTS TO SYSTEM TIME IN COMPUTER SYSTEMS

Bulent Abali, New York, and Ronald Mraz, Millwood, both of N.Y., assignors to International Business Machines Corporation, Armonk, N.Y.

Filed Jun. 9, 1995, Ser. No. 489,180

Int. Cl.⁶ G06F *1/14*

U.S. Cl. 395—551 **4 Claims**

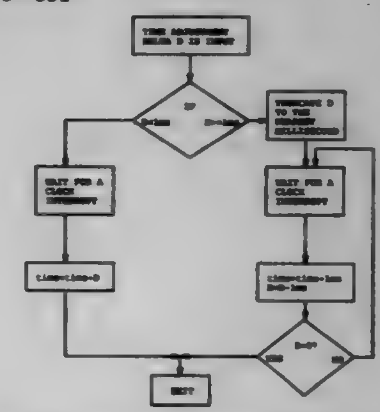

1. A method for adjusting system time in a computer system, comprising the steps of:

(a) determining an adjustment amount D by which the time must be adjusted;

(b) if the adjustment amount D is greater than or equal to a threshold value, incrementally adjusting the time, including the steps of:

(b1) truncating the adjustment amount D to the nearest integral multiple of the threshold value; and

(b2) repeating the following steps (b3)–(b4) until the adjustment amount D equals zero:

(b3) adjusting the time by an amount equal to the threshold value; and

(b4) reducing the adjustment amount D by an amount equal to the threshold value; and

(c) if the adjustment amount D is less than the threshold value, adjusting the time by the threshold value in a single step.

5,701,447

METHOD AND APPARATUS FOR ELIMINATING LATCH PROPAGATION DELAYS IN AN ALIGNMENT UNIT FOR USE IN A FRACTIONAL BUS ARCHITECTURE

Michael G. Hahn, Folsom, Calif., assignor to Intel Corporation, Santa Clara, Calif.

Filed Jul. 28, 1995, Ser. No. 508,831
Int. Cl.^{6} G06F *1/12*
U.S. Cl. 395—559 9 Claims

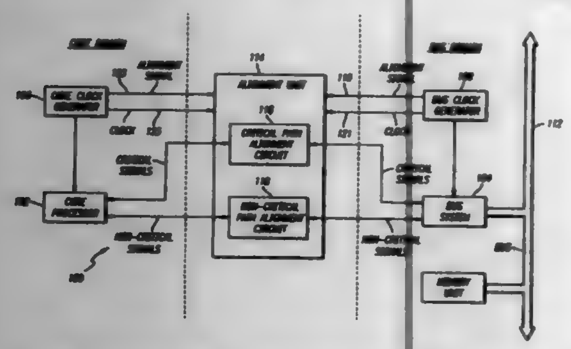

1. An alignment unit for a M:N fractional bus where M:N is a ratio of first and second clock domains, the alignment unit comprising:

an input that receives signals from the first clock domain;

an output that transmits signals to the second clock domain;

a latch, coupled between the input and the output, operative to latch signals transmitted between the first and second clock domains;

a latch bypass path which includes a tristate buffer coupled between the input and the output; and

a multiplexer which selects the latch bypass path for a signal when the first and second clock domains are aligned, thereby avoiding a propagation delay associated with the latch; otherwise, the signal being propagated through the latch.

5,701,448

DETECTING SEGMENT LIMIT VIOLATIONS FOR BRANCH TARGET WHEN THE BRANCH UNIT DOES NOT SUPPLY THE LINEAR ADDRESS

Christopher E. White, Dallas, Tex., assignor to Cyrix Corporation, Richardson, Tex.

Filed Dec. 15, 1995, Ser. No. 572,949
Int. Cl.^{6} G06F *9/00*
U.S. Cl. 395—580 12 Claims

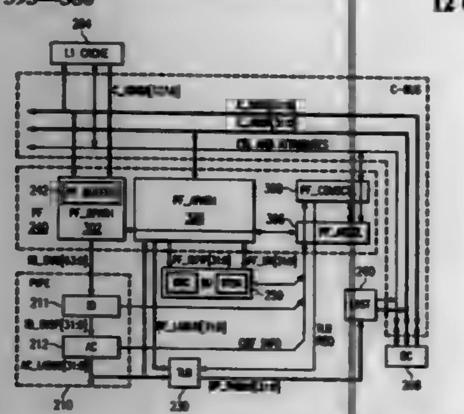

1. A processor implementing a scheme for detecting segment limit violations for COF (change-of-flow) targets when a branch unit does not supply the target linear address, the processor using a segmented and paged memory management model in which an address calculation stage generates a segmented linear address (IA) with high and low order parts (the code segment limit being defined by the segment base address and a segment limit), and if paging is enabled, generates a physical address (PA) by translating the high order part of the linear address (the low order part of the LA and the PA are the same), comprising:

(a) a prefetch unit that issues prefetch addresses for prefetch blocks of instruction bytes, and loads prefetch blocks of instruction bytes into a prefetch buffer for transfer to a decoder;

(b) a branch unit having a branch target cache (BTC) that for selected COF instructions provides target address information that is used to generate a prefetch address, the target address information including at least a portion of the low order part of the LA but not including all of the high order part of the LA;

(c) limit checking logic that stores

(i) a CSIA address corresponding to the linear address of the segment limit;

(ii) a PFLA address corresponding to the linear address of the next prefetch address to be issued by the prefetch unit;

(iii) a PFPA address corresponding to the physical address of the next prefetch address to be issued by the prefetch unit;

(d) for sequential prefetching, the prefetch unit issues a prefetch address corresponding to the PFPA address, and then increments the PFPA address and the PFLA address;

(e) for each incrementation of the PFLA address, the limit checking logic compares the CSLA address with the PFLA address to determine if the CSLA address is within the prefetch block designated by such prefetch address, and if so, sets a segment limit violation state including the location of the segment limit within the prefetch block;

(f) in response to a COF that results in BTC hit and the output of corresponding target address information used to generate a prefetch address for a corresponding target prefetch block, the limit checking logic compares at least a portion of the CSLA address to at least a portion of the target address information to detect a potential segment limit violation indicating that the CSLA address is potentially within such target prefetch block;

(e) if a potential segment limit violation is detected, the limit checking logic asserts a potential segment limit violation state, including a potential segment limit location, that inhibits the transfer to the decoder of any instruction bytes in the target prefetch block beyond the potential segment limit;

(f) in response to the generation of a target linear address in the address calculation stage, the limit checking logic compares at least the portion of the target linear address that was not used in detecting the potential segment limit violation with the corresponding portion of the CSLA address, and if they do not match, the potential segment limit violation state is deasserted.

5,701,449

DATA PROCESSOR

Masahito Matsuo, and Toyohiko Yoshida, both of Itami, Japan, assignors to Mitsubishi Denki Kabushiki Kaisha, Tokyo, Japan

Continuation of Ser. No. 181,353, Jan. 13, 1994, Pat. No. 5,526,498, which is a continuation of Ser. No. 953,041, Sep. 29, 1992, abandoned, which is a division of Ser. No. 317,253, Feb. 28, 1989, Pat. No. 5,193,205. This application May 30, 1996, Ser. No. 657,710
Claims priority, application Japan, Mar. 1, 1988, 63-49093; Apr. 7, 1988, 63-86704
Int. Cl.^{6} G06F *9/38;9/40;9/42*
U.S. Cl. 395—586 3 Claims

1. A data processor comprising:

a first storage means for storing instructions, operand data, and subroutine return addresses when a subroutine call instruction is executed;

a second storage means for storing at least in part of a copy of said subroutine return address stored in said first storage means when said subroutine call instruction is executed;

a first address counter, coupled to a first address input of said second storage means, which is at least incrementable or decrementable, and points to one of a plurality of entries in said second storage means;

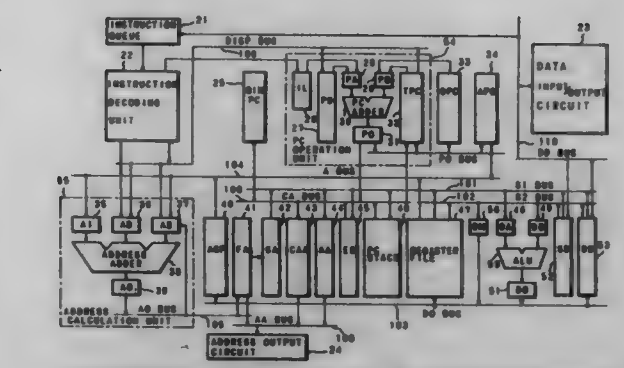

a second address counter, coupled to a second address input of said second storage means, which is incrementable and decrementable, and points to one of said plurality of entries in said second storage means, and wherein contents of said second address counter are independently adjustable relative to contents of said first address counter;

a first reading means, coupled to said first address counter and said second storage means, for reading a value from an entry of said second storage means indicated by the value of said first address counter;

a second reading means, coupled to said second address counter and said second storage means, for reading a value from an entry of said second storage means indicated by the value of said second address counter;

a first writing means, coupled to said second address counter and said second storage means, for writing said at least a part of a copy of said subroutine return address into an entry of said second storage means which is indicated by the value of said second address counter;

a second writing means, coupled to said first address counter and said second address counter, for writing in a value of said second address counter to said first address counter when activated by a second writing means control signal; and

a third writing means, coupled to said first storage means, for writing said operand data and said subroutine return addresses to said first storage means.

5,701,450

SYSTEM INCLUDING ATA SEQUENCER MICROPROCESSOR WHICH EXECUTES SEQUENCER INSTRUCTIONS TO HANDLE PLURALITY OF REAL-TIME EVENTS ALLOWING TO PERFORM ALL OPERATIONS WITHOUT LOCAL MICROPROCESSOR INTERVENTION

Kathleen Anne Duncan, Santa Cruz, Calif., assignor to Seagate Technology, Inc., Scotts Valley, Calif.

Continuation of Ser. No. 202,391, Feb. 25, 1994, abandoned. This application Apr. 22, 1996, Ser. No. 639,243
Int. Cl.^{6} G06F *9/44;13/12*
U.S. Cl. 395—595 40 Claims

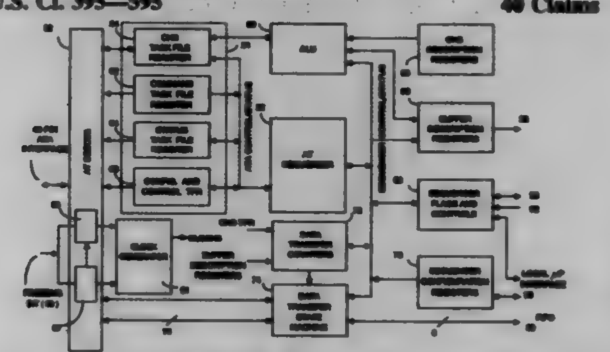

1. An ATA-compatible hard disc controller comprising a local microprocessor, and an ATA programmable sequencer comprising:

a sequencer microprocessor for interfacing, over a host bus, between an ATA host system including a host processor and a hard disc drive system including said controller and said local microprocessor;

at least one task file register, coupled to said sequencer microprocessor, for holding information including addresses corresponding to locations on said hard disc drive whereat information is stored or retrieved;

a program instruction set for controlling operation of said sequencer microprocessor;

said program instruction set causing said sequencer microprocessor to execute in a first direction for read operations, to execute in a second direction for write operations, or to otherwise execute always, wherein branching and interruption of said host processor is avoided; and

wherein said program instruction set programs said sequencer microprocessor by dedicating a plurality of real-time events occurring on said host bus to be handled by said sequencer microprocessor said plurality of real-time events dedicated to said sequencer microprocessor including reacting to a write command, preparing to receive data, intersector handshake, and task file update;

such that said sequencer microprocessor executes said sequencer instructions to handle said plurality of real-time events so as to allow said sequencer to perform all operations required to transmit and receiver multiple sectors of data to or from said host system promptly and without substantial intervention from said local microprocessor; and

said program instruction set further programs said sequencer microprocessor to manage said task file register means associated with said host bus so as to decouple said local microprocessor from real-time management of said addresses in said task file register.

5,701,451

METHOD FOR FULFILLING REQUESTS OF A WEB BROWSER

Richard Michael Rogers, Beacon, N.Y., and Konrad Charles Lagarde, Milford, Conn., assignors to International Business Machines Corporation, Armonk, N.Y.

Filed Jun. 7, 1995, Ser. No. 474,577
Int. Cl.^{6} G06F *17/30*
U.S. Cl. 395—600 34 Claims

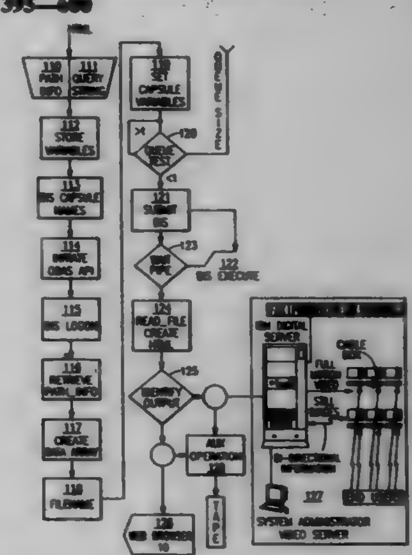

1. A method of fulfilling requests of a web browser client, comprising:

displaying an HTML document to said web browser;

invoking a control program agent;

receiving data entered by the user from the HTML document and passing said user entered data to said control program

agent upon invocation as input parameters to said control program agent that were returned from said HTML document;

using an API set for invoking executable command files accessible via an associated command file object, provided as user entered data for supplying to said control program agent values selected by a user to control the processes of fulfilling a Web request and for determining the nature of a resultant fulfillment of the request from information resources supplied from the World Wide Web.

5,701,452

COMPUTER GENERATED STRUCTURE

David M. Siefert, Englewood, Ohio, assignor to NCR Corporation, Dayton, Ohio

Filed Apr. 20, 1995, Ser. No. 425,164

Int. Cl.^{6} G06F *17/30*

U.S. Cl. 395—601 **24 Claims**

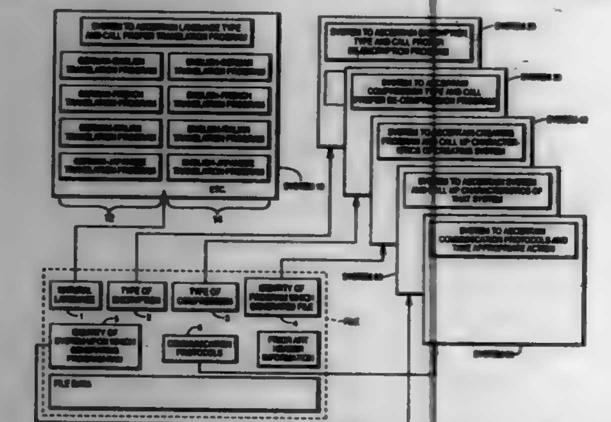

6. A method of processing a computer file having file data, comprising the following steps:

a) maintaining, in association with the file, information indicative of at least two of the following:

i) natural language of the file;

ii) type of encryption of the file;

iii) type of compression of the file;

iv) identity of the program which generated the file, which program runs on an operating system;

v) identity of the operating system upon which the generating program ran; and

vi) communication protocol required by the file;

b) locating the information indicative of at least two of i) through vi) between a header for the system and a file header for the file data; and

c) reading said information and calling respective programs which process the file in accordance with the information, without human intervention.

5,701,453

LOGICAL SCHEMA TO ALLOW ACCESS TO A RELATIONAL DATABASE WITHOUT USING KNOWLEDGE OF THE DATABASE STRUCTURE

Christopher W. Maloney, Overland Park, Kans.; Brian D. Jackson, Belton, Mo.; Kevin B. Mayfield, Lenexa, Kans.; Mark A. Mills, Stillwell, Kans., and Kent A. Tracy, Lenexa, Kans., assignors to Informix Software, Inc., San Carlos, Calif.

Filed Jul. 1, 1993, Ser. No. 86,001

Int. Cl.^{6} G06F *17/30*

U.S. Cl. 395—602 **11 Claims**

1. A method for providing access to data stored in a plurality of relational database tables, each of said relational database tables having at least one field, comprising the steps of:

specifying at least one logical relationship by:

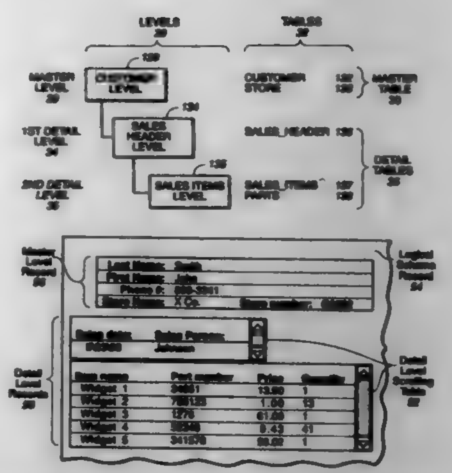

selecting a pair of tables having a common field from among said plurality of relational database tables;

selecting the common field of said pair of tables as a join field; and

selecting a join operator for said join field to define a join between said pair of tables,

the logical relationship being one of One-to-One, One-to-Zero-or-One, One-to-Zero-or-More, and One-to-One-or-More; and

creating a logical schema defining a multilevel hierarchy of the tables in the specified logical relationships, wherein a first table and a second table of a pair of tables in a logical relationship are at an equal hierarchy level if the logical relationship is one of One-to-One and One-to-Zero-or-One and the first table is at a higher hierarchy level than the second table if the logical relationship is one of One-to-Zero-or-More One-to-One-or-More.

5,701,454

SIMPLIFICATION OF SQL QUERIES USING GENERALIZED INFERENCE PROPAGATION AND GENERALIZED TRANSITIVE CLOSURE

Gautam Bhargava, Cupertino; Piyush Goel, Monte Sereno, and Balakrishna Ragmavendra Iyer, San Jose, all of Calif., assignors to International Business Machines Corporation, Armonk, N.Y.

Filed Jan. 17, 1995, Ser. No. 373,562

Int. Cl.^{6} G06F *17/30*

U.S. Cl. 395—602 **86 Claims**

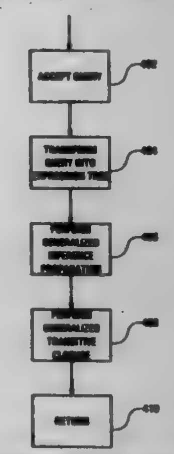

1. A method of simplifying an SQL query in a computer having a memory, the SQL query being performed by the computer to retrieve data from a relational database stored in a electronic storage device coupled to the computer, the method comprising the steps of:

(a) iteratively calculating, in the memory of the computer, a strong set of attributes referenced in the query; and

(b) iteratively replacing, in the memory of the computer, full, left, and right outer join operations found in one or more operands of an intersection operation in the query with outer and inner join operations using the strong set of attributes until no more simplification is possible.

5,701,455

METHOD AND APPARATUS FOR REORDERING COMPLEX SQL QUERIES USING A MODIFIED GENERALIZED OUTER JOIN OPERATOR

Gautam Bhargava, Cupertino; Piyush Goel, Monte Sereno, and Balakrishna Ragmavendra Iyer, San Jose, all of Calif., assignors to International Business Machines Corporation, Armonk, N.Y.

Division of Ser. No. 326,461, Oct. 20, 1994. This application Jun. 5, 1995, Ser. No. 464,263

Int. Cl.^{6} G06F *17/30*

U.S. Cl. 395—602 **9 Claims**

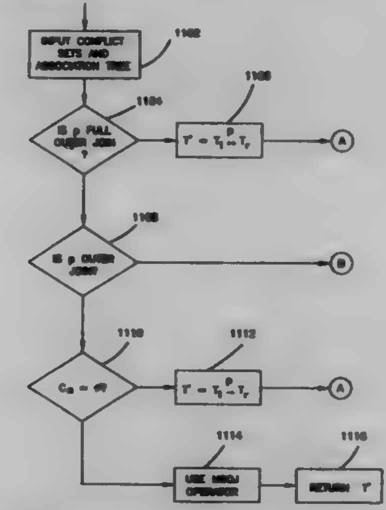

1. A method of reordering an SQL query in a computer having a memory, comprising the steps of:

(a) accepting a query into the memory of the computer, wherein a first expression of the query comprises:

$$X_1 \overset{p_{1,2}}{\rightarrow} \left(X_2 \overset{p_{1,2}}{\bowtie} X_3 \right)$$

(b) replacing the first expression with a second expression comprising:

$$\left(X_1 \overset{p_{1,2}}{\rightarrow} X_2 \right) MGOJ\, [p_{2,3}, X_1]\, X_3$$

wherein the MGOJ operator comprises a relation $(R_{1,2}R_3, V_{1,2}V_3, E')$ and the second expression preserves relation X_1, wherein:

$$r_{1,2} = \left(X_1 \overset{p_{1,2}}{\rightarrow} X_2 \right) = \langle R_{1,2}, V_{1,2}, E_{1,2} \rangle,$$

wherein $R_{1,2}$ is a non-empty set of real attributes, $V_{1,2}$ is a non-empty set of virtual attributes, and $E_{1,2}$ is a set of tuples in the relation $R_{1,2}$,

$r_3 = X_3 = (R_3, V_3, E_3)$, wherein R_3 is a non-empty set of real attributes, V_3 is a non-empty set of virtual attributes, and E_3 is a set of tuples in the relation r_3,

$$R_{1,2} \cap R_3 = \phi,$$

$$V_{1,2} \cap V_3 = \phi,$$

-continued

$$X_I = \langle R_I, V_I, E_I \rangle,$$

$$E' = \left(r_{1,2} \overset{p_{2,3}}{\bowtie} r_3 \right) \uplus \left(\pi^c_{X_1 V_{x_1}} (E_{1,2}) - \pi^c_{X_1 V_{x_1}} \left(E_{1,2} \overset{p_{2,3}}{\bowtie} E_3 \right) \right)$$

$P_{i,j}$ is a predicate for

$$X_1 \overset{p}{\odot} X_j \times,$$

and

π^c denotes a projection operation.

5,701,456

SYSTEM AND METHOD FOR INTERACTIVELY FORMULATING DATABASE QUERIES USING GRAPHICAL REPRESENTATIONS

Tom William Jacopi; Brian Gerrit Payton, and Howard Alexander Siwek, all of San Jose, Calif., assignors to International Business Machines Corporation, Armonk, N.Y.

Continuation of Ser. No. 32,914, Mar. 17, 1993, abandoned. This application Aug. 30, 1995, Ser. No. 520,903

Int. Cl.^{6} G06F *17/30*

U.S. Cl. 395—604 **37 Claims**

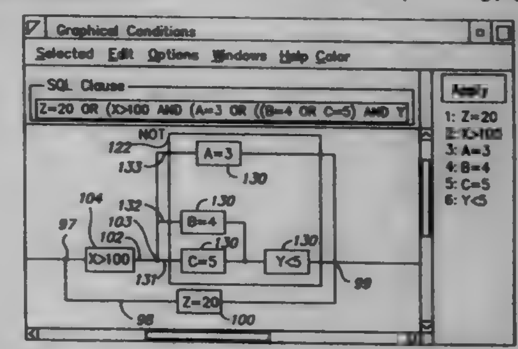

1. A method for converting a graphical representation to a Boolean algebra statement representation comprising the steps of:

(a) when two arcs have the same To_Nodes and From_Nodes, combining the arcs into one arc with the conditions represented by the original arc linked by a logical OR operand;

(b) when two arcs are in a series with a Third_Node in between having the same two arcs going into and out of it, combining the arcs into one arc with the conditions represented by each original arc linked by an AND operator;

(c) pushing onto a stack a graph path;

(d) popping a path from the stack for further processing;

(e) processing the path to produce a Boolean algebra statement segment while identifying any new paths;

(f) pushing a new path onto the stack; and

(g) repeating steps (d) through (f) until the stack is empty.

5,701,457

METHOD OF DESIGNATED TIME INTERVAL RESERVATION ACCESS PROCESS OF ONLINE UPDATING AND BACKING UP OF LARGE DATABASE VERSIONS WITHOUT RESERVING EXCLUSIVE CONTROL

Shinji Fujiwara, Yokohama, Japan, assignor to Hitachi, Ltd., Tokyo, Japan

Filed Sep. 7, 1995, Ser. No. 524,829

Claims priority, application Japan, Sep. 8, 1994, 6-240665

Int. Cl.^{6} G06F *17/30*

U.S. Cl. 395—608 **9 Claims**

1. A reservation access processing method for a database having a storage device for storing a database table including a plurality of

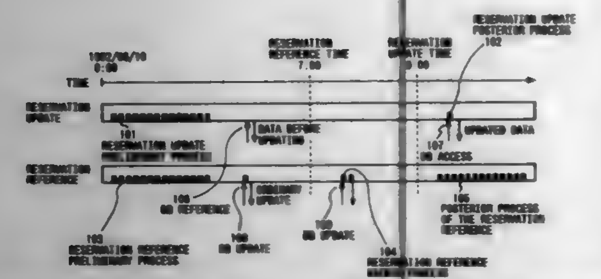

records and a processing apparatus for accessing an optional record in said database table, reserving an updating of said plurality of records and executing said reserved updating at a designated reservation update time, comprising:

a reservation update preliminary process step of storing and registering the designated reservation update time and update content of each record to be updated in said database table for reservation update as reservation update information having a one-to-one correspondence with said record; and

a reservation update posterior process step of executing updating according to the update content of the reservation update information corresponding to said record when said record is accessed for the first time after the reservation update time and deleting said reservation update information, wherein when access to a record in said database is requested, said method checks whether there is reservation update information of said record or not and when there is reservation update information corresponding to said record after the reservation update time, said method executes said reservation update posterior process and then accesses said record, and when there is no reservation update information or the reservation update time has not yet occurred, said method does not execute the reserved update but accesses said record.

5,701,458

SYSTEM AND METHOD FOR MANAGING ARBITRARY SUBSETS OF ACCESS CONTROL LISTS IN A COMPUTER NETWORK

Mounir Emile Bealbes, Austin, and Timothy Roger Kells, Round Rock, both of Tex., assignors to International Business Machines Corporation, Armonk, N.Y.

Filed Sep. 20, 1995, Ser. No. 531,361

Int. Cl.⁶ G06F *17/30*

U.S. Cl. 395—609 **20 Claims**

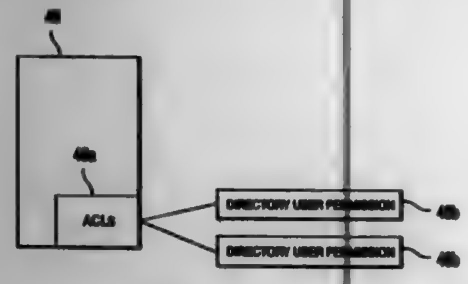

1. For use in a data processing system having hierarchically structured access control lists (ACL), each with entries comprising a plurality of actions and data, a computerized method for managing said ACLs, comprising:

editing a selected subset of said ACLs;

executing an apply function on said ACLs; and

generating, in response to said executing, a heterogeneous group of said ACLs corresponding to said selected subset of said ACLs.

5,701,459

METHOD AND APPARATUS FOR RAPID FULL TEXT INDEX CREATION

Ronald P. Millett, Orem; Robin P. Tuck, Provo; Blaine S. Dennis, Orem, and David O. Robertson, Provo, all of Utah, assignors to Novell, Inc., Provo, Utah

Continuation of Ser. No. 3,713, Jan. 13, 1993, abandoned. This application Mar. 1, 1996, Ser. No. 609,233

Int. Cl.⁶ G06F *17/30*

U.S. Cl. 395—603 **34 Claims**

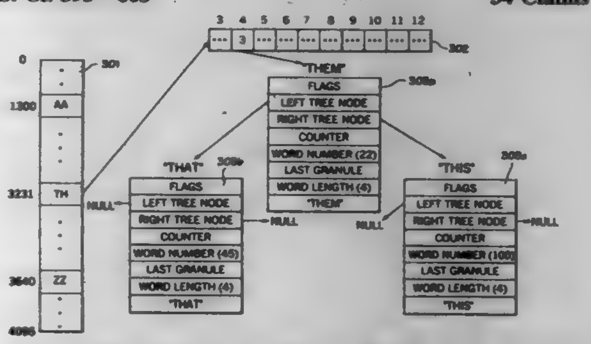

1. A computer system for creating a full text index associated with a source text including one or more documents, each document comprising one or more granules, each granule defining an indexing unit of text including one or more words, the computer system comprising:

(a) a first storage for storing the source text;

(b) memory coupled to a processor for storing data used to create the full text index;

(c) a second storage for storing the full text index; wherein the processor is associated with the first and second storage for creating the full text index in two phases, said processor performing the steps of:

i. in the first phase, reading the source text; creating a word list comprising an entry for each unique word in the source text; and creating a non-repeating word number stream comprising a single entry for each unique word in each granule of the source text; and

ii. in the second phase, creating an array in the memory comprising an entry for each unique word in the source text, said entry including a reference to a location in an uncompressed index, said uncompressed index associating a granule reference with each of said unique words; creating said uncompressed index as a function of the non-repeating word number stream; compressing the uncompressed index into the full text index; and storing the full text index in said second storage.

5,701,460

INTELLIGENT JOINING SYSTEM FOR A RELATIONAL DATABASE

David L. Kaplan, Mercer Island, and Andrew R. Miller, Bellevue, both of Wash., assignors to Microsoft Corporation, Redmond, Wash.

Filed May 23, 1996, Ser. No. 652,366

Int. Cl.⁶ G06F *17/30*

U.S. Cl. 395—603 **23 Claims**

1. A computer operable method for automatically generating a structured query language query to extract data from a database wherein said database includes a schema defined by a plurality of record sources and a plurality of relationships therebetween, said method comprising:

selecting a field set containing at least one field from among said plurality record sources in said database;

determining a minimal path relationship between each of a plurality of field set record sources wherein each of said plurality of field set record sources contains at least one field from said field set and wherein said minimal path relationship includes at least one indirect relationship;

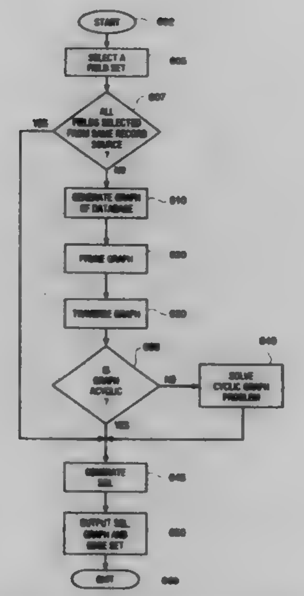

generating a graph of a sub-schema of said database wherein said sub-schema is defined by said plurality of field set record sources and said minimal path relationship among said plurality of field set record sources; and

generating said structured query language query based on said sub-schema and said minimal path relationship between each of said plurality of field set record sources.

5,701,461

METHOD AND SYSTEM FOR ACCESSING A REMOTE DATABASE USING PASS-THROUGH QUERIES

Ketan K. Dalal, and Stephen Charles Hecht, both of Seattle, Wash., assignors to Microsoft Corporation, Redmond, Wash.

Filed Jan. 27, 1995, Ser. No. 379,397

Int. Cl.⁶ G06F *17/30*

U.S. Cl. 395—604 **15 Claims**

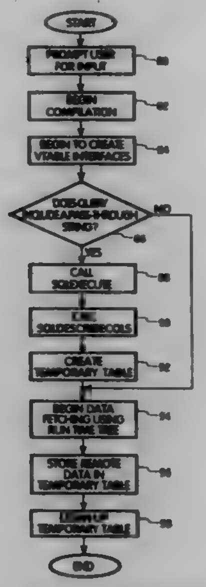

1. A method for accessing a database server on a computer network using a pass-through query, the method comprising:

receiving a database query in a local database management system in a local computer system during runtime of the local database management system;

parsing the database query to identify the pass-through query in the database query;

from the local computer system on the computer network, sending the pass-through query to the database server to obtain table structure data associated with results of the pass-through query;

receiving the table structure data of the results of the pass-through query from the database server;

caching the table structure data in a temporary table in main memory of the local computer system;

determining whether requested results are already cached in the temporary table in response to a user request for the requested results;

fetching the data as needed from the database server to obtain the requested results of the pass-through query if the requested results are not already cached in the temporary table;

caching the requested results in the temporary table if the requested results are not already cached in the temporary table; and

using the table structure data to create an interface for fetching data from the database server;

and using the interface as an input to a local database operation in the database query performed by the local database management system in the local computer system.

5,701,462

DISTRIBUTED FILE SYSTEM PROVIDING A UNIFIED NAME SPACE WITH EFFICIENT NAME RESOLUTION

Alan Whitney; Yuval Neeman, both of Bellevue; Sudheer Koneru, Redmond; Milan Shah, Redmond; Peter J. Cook, Redmond, and Arnold S. Miller, Bellevue, all of Wash., assignors to Microsoft Corporation, Redmond, Wash.

Filed Dec. 29, 1993, Ser. No. 174,910

Int. Cl.⁶ G06F *17/30*

U.S. Cl. 395—610 **16 Claims**

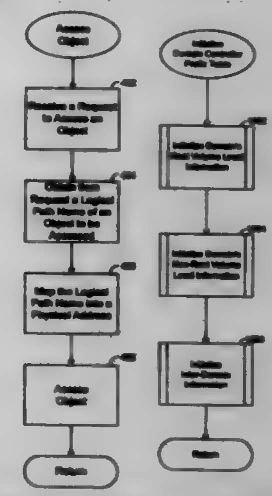

1. In a distributed system having a distributed name space of objects wherein each object has both a logical name uniquely identifying the object in the distributed name space and a corresponding address, the objects being grouped into logical domains which are organized into a hierarchical structure wherein each domain may have one superior domain in the hierarchical structure and one or more subordinate domains in the hierarchical structure, a computer implemented method for accessing an object comprising the steps of:

providing a domain controller component for each domain, each domain controller component holding a prefix table which stores an entry for a logical name in the distributed name space of a domain controller component for any immediately superior domain and an entry for the logical name in the distributed name space for any domain controller component in any immediately subordinate domain, each said entry specifying an address of the respective domain controller component;

providing a first computer component for processing requests for information from the distributed system, the first computer component including another prefix table which stores entries for prefixes of logical names in the distributed name space and each entry specifies an address of a selected object in the distributed system that is named by the prefix;

receiving a request to access the selected object at the first computer component, wherein the request includes a logical name for the selected object to be accessed in the distributed system;

determining if an entry for a prefix of the logical name for the selected object from the request is stored in the prefix table of the first computer component;

in response to a determination that an entry for a prefix of the logical name for the selected object is not stored in the prefix table of the first computer component,

retrieving from the prefix table of the first computer component the address of the domain controller component for the domain containing the first computer component;

sending the logical name for the selected object from the request to the domain controller component for the domain containing the first computer component;

retrieving from the prefix table of the domain controller component for the domain containing the first computer component, an address of the selected object; and

accessing the object at the address that was retrieved from prefix table of the domain controller component which contains the first computer component.

5,701,463

METHOD OF REPLACING THE IDENTITY OF A FILE WITH ANOTHER AS PART OF A FILE OPEN REQUEST IN A COMPUTER SYSTEM

Peter Bryan Malcolm, Lewdown, United Kingdom, assignor to Cheyenne Advanced Technology Limited, London, England

Filed Sep. 9, 1994, Ser. No. 304,098

Int. Cl.⁶ G06F *13/00*

U.S. Cl. 395—610 **14 Claims**

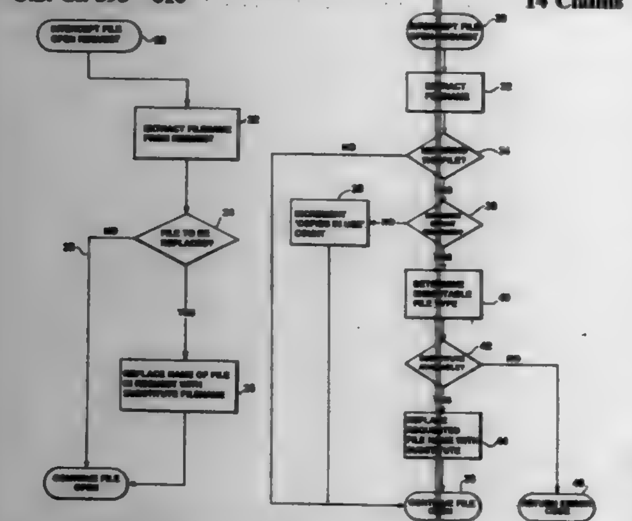

1. A method of operating a computer system having, at a first computer site, memory means, a central processor for executing an operating system, and storage means for storing a file, in which the operating system at the first computer site periodically executes requests from a second computer site to open the file stored in the storage means, wherein the method comprising the steps of:

intercepting, at the first computer site, a file open request made from the second computer site to the operating system identifying by at least a name a first file to be opened;

extracting from the request the name of the first file;

determining whether the extracted name of the first file should be replaced with the name of a substitute file to be opened instead of the first file and, if it is determined that the name should be so replaced, amending the request, before passing the request to the operating system, to replace the name of the first file with the name of the substitute file, and

passing the request to the operating system to open the first file if it is determined that the name of the first file should not be replaced, or to open the substitute file at the first computer site if it is determined that the name of the first file should be replaced.

5,701,464

PARAMETERIZED BLOOM FILTERS

David W. Aucsmith, Portland, Oreg., assignor to Intel Corporation, Santa Clara, Calif.

Filed Sep. 15, 1995, Ser. No. 528,912

Int. Cl.⁶ G06F *17/30*

U.S. Cl. 395—610 **26 Claims**

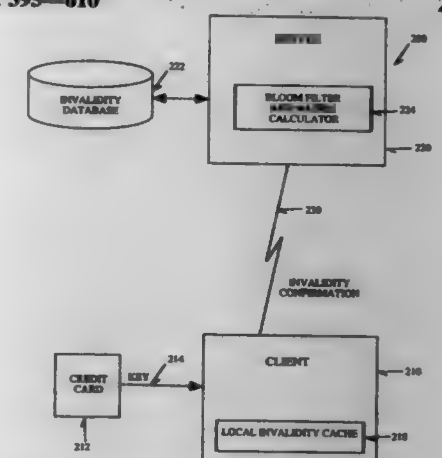

1. A method in a first computer system of determining validity of a key comprising:

a. updating a bloom filter at periodic intervals by:

i. providing said first computer system's requirements of said bloom filter to a second computer system, said second computer system having access to an invalidity database which includes all invalid keys; and

ii. receiving bloom vectors and coefficients which comprise said bloom filter from said second computer system;

b. accepting said key; and

c. applying said bloom filter to said key to determine if said key is present in said invalidity database.

5,701,465

METHOD AND APPARATUS FOR RESERVING SYSTEM RESOURCES TO ASSURE QUALITY OF SERVICE

Mark John Baugher; Philip Yen-Tang Chang, both of Austin; Gregory Lynn Morris, Round Rock, and Alan Palmer Stephens, Austin, all of Tex., assignors to International Business Machines Corporation, Armonk, N.Y.

Continuation of Ser. No. 84,053, Jun. 29, 1993, Pat. No. 5,581,703. This application Jul. 1, 1996, Ser. No. 674,074

Int. Cl.⁶ G06F *17/30;13/14*

U.S. Cl. 395—610 **16 Claims**

1. A method for providing files to a remote node comprising the steps of:

determining whether bandwidth is available for transmitting across a communications link a file requested by a remote node;

reserving said bandwidth for the requested file if said bandwidth is determined to be available; and

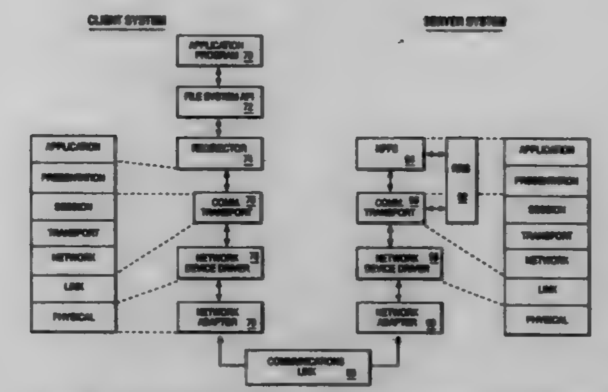

opening the requested file for transmission only if said bandwidth is reserved.

5,701,466

APPARATUS AND METHOD FOR END USER QUERIES

Dennis Yong; Viktor Choong-Hung Cheng; Liat Lim, and Siew Choon Tay, all of Singapore, Singapore, assignors to Singapore Computer Systems Limited, Singapore

Continuation-in-part of Ser. No. 154,343, Nov. 17, 1993, abandoned, which is a continuation-in-part of Ser. No. 846,522, Mar. 4, 1992, Pat. No. 5,325,465. This application Nov. 29, 1994, Ser. No. 346,507

Int. Cl.⁶ G06F *17/30*

U.S. Cl. 395—611 **68 Claims**

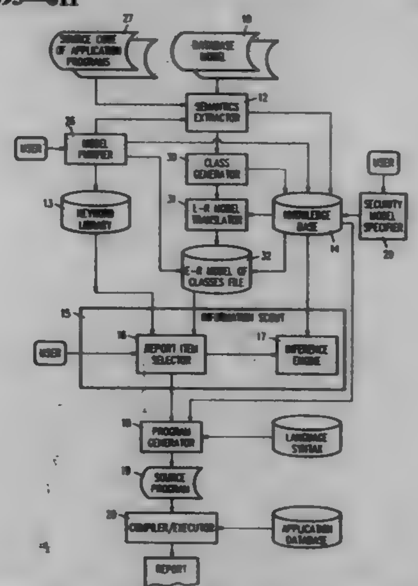

1. An end user query facility for accessing a database having a plurality of database files formed using a database model, comprising:

a knowledge base which stores a set of classes and a set of linkages of the database model, each said class representing a hierarchical grouping of a subset of said database files, each said linkage representing a relation between two of said database files in which a first file has a key that references an equivalent key of a second file;

a class generator for reading said database model and generating said set of classes and said set of linkages of the database model and which stores in said knowledge base said set of classes and said set of linkages;

an information scout for interfacing with a user to obtain from the user choices based on said classes as a designation of the information to be extracted from said database;

an inference engine which, based upon said designation of information to be extracted from said database, identifies one or more of said database files which contain the desired information and searches said knowledge base to determine the linkage(s) connecting said one or more identified files; and

a program generator which accesses the linkages obtained by said inference engine and generates a program to extract said desired information from said database.

5,701,467

COMPUTER DATA STORAGE MANAGEMENT SYSTEM AND METHODS OF INDEXING A DATASPACE AND SEARCHING A COMPUTER MEMORY

Michael William Freeston, Munich, Germany, assignor to European Computer-Industry Research Centre GmbH, Munich, Germany

PCT No. PCT/EP94/02166, § 371 Date May 20, 1996, § 102(e) Date May 20, 1996, PCT Pub. No. WO95/02222, PCT Pub. Date Jan. 19, 1995

PCT Filed Jul. 1, 1994, Ser. No. 583,072

Claims priority, application European Pat. Off., Jul. 7, 1993, 93110856

Int. Cl.⁶ G06F *17/30*

U.S. Cl. 395—611 **3 Claims**

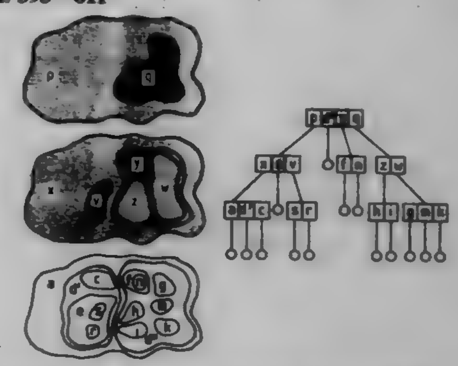

1. A computer-implemented computer data storage management system including a memory employing a hierarchical data structure representing the recursive partitioning of a data space into contiguous or disjoint subspaces, and such that the external boundary of any subspace does not intersect the external or internal boundary of any other subspace at the same or any other level of recursive partitioning but may enclose, or partially coincide with, the external boundary of said other subspace;

the data structure hierarchy comprising a plurality of nodes including a root node, a plurality of branch nodes and a plurality of leaf nodes;

each node in the data structure hierarchy representing a subspace at respective or lower level in the corresponding recursive partition hierarchy;

the root node representing the entire data space;

each lower level node representing a subspace of the space represented by a respective parent node, or a subspace of the space represented by a descendant of the respective parent node, each lower level node comprising a child node;

the branch nodes in the hierarchical data structure being index nodes and the leaf nodes being data nodes;

each data node containing either a set of data entries or a set of pointers which reference data entries stored elsewhere;

each data entry containing a value or set of values which directly or indirectly specify the coordinates of a point representing that data entry in the data space;

each index node containing a set of index entries;

each index entry corresponding uniquely to one of the children of the index node which contains the index entry, each index entry being associated with:

(i) a respective pointer which refers to the logical address of the child node corresponding to the index entry, and

(ii) a value or set of values which directly or indirectly defines the external boundary of the subspace represented by the index entry; characterised in that:

node promotion can occur as a result of node overflows due to the introduction of extra information into the memory;

an unpromoted node being a node which is at the same level in the data structure hierarchy as the level of the subspace which it represents in the corresponding recursive partition hierarchy, and a promoted node being a node which is at a higher level in the data structure hierarchy than the level of the subspace which it represents in the corresponding recursive partition hierarchy;

the subspace represented by any child node promoted to a respective node being a subspace of the union of all the subspaces represented by unpromoted children of the respective node;

in that the system includes first means which, upon the introduction of said extra information into the memory and resultant overflow of an index node, split the said index node into two resulting index nodes by partitioning the space which the said index node represents into two subspaces, said partitioning either being such that the number of index entries in the two resulting index nodes is as near equal as possible, or being in accordance with a predetermined criterion of balance in the distribution of the index entries between the two resulting index nodes; the first means serving also to dispose the two resulting index nodes at the same level of the data structure hierarchy as the index node from which they were created, with each resulting index node having as parent the parent of the index node from which it was created,

in that the system includes second means which, if the external boundary of one of the two subspaces represented by the resulting index nodes is enclosed by the external boundary of the other of the two subspaces, and if no index entry in the said index node represents a subspace whose external boundary coincides with the said enclosed external boundary but there exists in the said index node an unpromoted or promoted index entry which represents a subspace whose external boundary directly encloses the said enclosed external boundary, promote said unpromoted or promoted index entry to the parent of the said index node; the external boundary of a first subspace directly enclosing the external boundary of a second subspace if, at the same recursive partition level, there exists no third subspace whose external boundary is enclosed by the external boundary of the said first subspace and whose external boundary encloses the external boundary of the said second subspace;

in that the system includes third means which for each index node entry associate an indication of the level, in the hierarchy of recursive partitions of the dataspace, of the subspace represented by the entry;

and characterised in that the internal boundary of the subspace represented by an index entry is defined implicitly by the presence in the index of one or more other index entries which belong to the same or higher recursive partitioning level and each of which represents a subspace which the external boundary of the subspace represented by the said index entry directly encloses.

5,701,468

SYSTEM FOR PERFORMING DATA COMPRESSION BASED ON A LIU-ZEMPEL ALGORITHM

Alain Benayoun, Cagnes Sur Mer; Jacques Fieschi, Saint Laurent Du Var; Patrick Michel, LaGaude, and Jean-Francois LePennec, Nice, all of France, assignors to International Business Machines Corporation, Armonk, N.Y.

Filed May 18, 1995, Ser. No. 444,139

Claims priority, application European Pat. Off., Dec. 20, 1994, 94480176

Int. Cl.⁶ G06F *5/00*

U.S. Cl. 395—612 **10 Claims**

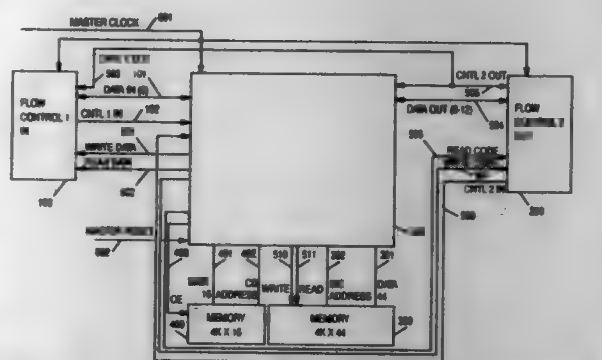

1. A processor for performing data compression, said processor being connected by means of an external bus (301, 302) to at least one memory storage (300, 400) for storing a set of instructions as well as data representative of a dictionary consisting of a set of strings with a codeword for each of said strings and including all possible strings of one byte in length, characterized in that said processor comprises:

an internal bus (650);

a first set of four registers (701, 702, 703, 704) connected between said external and said internal bus for storing data representative of a dictionary entry read from said memory storage (300), said first set comprising a first latch (701) for storing, in a first field, a codeword for the last character of a string being stored, a second latch (702) for storing, in a second field, a codeword for a SON string comprising the current string plus an additional character, a third latch (703) for storing, in a third field, a codeword for a BROTHER string comprising a dictionary entry which follows a dictionary entry for the current string and which differs from the current string only by having a different last character, and a fourth latch (704) for storing, in a fourth field, a PARENT string which consists of the current string minus the last character;

a second set of four registers (705, 706, 707, 708) connected between said external and said internal bus for storing data representative of said dictionary entry read from said memory storage (300); said second set comprising a first latch (705), a second latch (706), a third latch (707) and a fourth latch (708) for respectively storing said first, second, third and fourth fields of the data entry extracted from said memory storage (300);

a program counter register (713) for storing an instruction address for addressing said at least one memory storage (300); and

a processing unit (600) for receiving instructions stored in said at least one memory storage (300) and for generating control signals needed in said processor (500).

5,701,469

METHOD AND SYSTEM FOR GENERATING ACCURATE SEARCH RESULTS USING A CONTENT-INDEX

Stephen A. Brandli, Bothell, and William P. Jones, Kirkland, both of Wash., assignors to Microsoft Corporation, Redmond, Wash.

Filed Jun. 7, 1995, Ser. No. 477,486

Int. Cl.⁶ G06F *17/30*

U.S. Cl. 395—613 **60 Claims**

1. A method in a computer system for generating a search result that identifies objects that satisfy a search criteria, the computer system having a collection of objects and a plurality of terms, each object containing one or more of the terms, the method comprising the computer-implemented steps of:

creating a content-index that contains, for each of the plurality of terms, a reference to each object that contains the term;

after creating the content-index, updating the collection of objects by adding new objects to the collection, by removing objects from the collection, or by modifying the terms contained by an object, the updating being performed without updating the content-index to reflect the updates to the collection of objects;

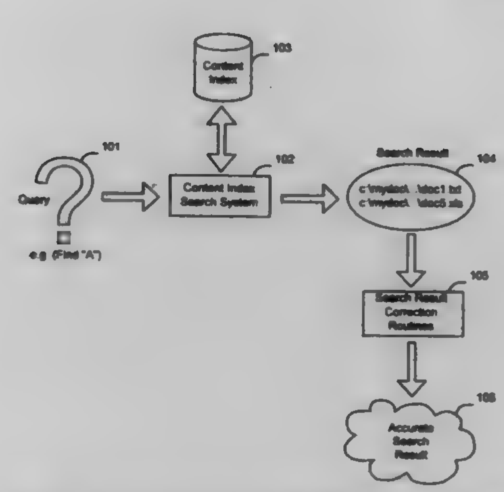

searching the content-index to identify objects that satisfied the search criteria before the collection of objects was updated, and storing an indication of each identified object as the search result; and

updating the search result to reflect the updated collection of objects by,

adding an indication of each object that was added to the collection of objects and that satisfies the search criteria;

removing the indication of each object that was removed from the collection of objects;

adding an indication of each object that was modified and that now satisfies the search criteria; and

removing the indication to each object that was modified and that no longer satisfies the search criteria.

5,701,470

SYSTEM AND METHOD FOR SPACE EFFICIENT OBJECT LOCKING USING A DATA SUBARRAY AND POINTERS

William N. Joy, Aspen, Colo., and Arthur A. van Hoff, Mountain View, Calif., assignors to Sun Microsystems, Inc., Mountain View, Calif.

Filed Dec. 8, 1995, Ser. No. 569,753

Int. Cl.⁶ G06F *17/30*

U.S. Cl. 395—614 **18 Claims**

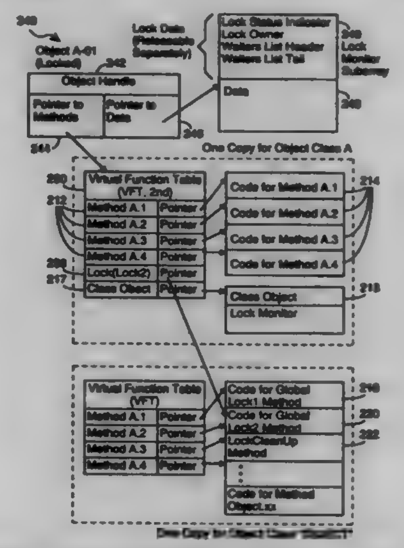

7. A method of operating a computer system, comprising the steps of:

storing in a computer memory a plurality of objects and a plurality of procedures, each stored object having a lock status selected from the set consisting of locked and unlocked, each stored object including a data pointer to a data structure;

when servicing a lock request on a specified object that has never been locked, executing a first object locking procedure that includes instructions for changing the specified object's lock status to locked, for copying said data structure pointed to by said data pointer to an enlarged data structure including a lock data subarray for storing lock data and for updating said data pointer to point to said enlarged data structure;

when servicing a lock request on a specified locked object that has an allocated lock data subarray, executing a second object locking procedure that includes instructions for updating said specified object's stored lock data;

associating with each stored object that has not recently had a lock status of locked a methods pointer to a first subset of said procedures that includes said first object locking procedure and does not include said second object locking procedure;

associating with each stored object that has recently had a lock status of locked including a methods pointer to a second subset of said procedures that includes said second object locking procedure and does not include said first object locking procedure;

when executing said first object locking procedure to service a lock request on an unlocked object, updating said specified object's method pointer to point to said second subset of said procedures that includes said second object locking procedure; and

when predefined release criteria are satisfied, executing a lock data cleanup procedure to release a specified object's lock data subarray.

5,701,471

SYSTEM AND METHOD FOR TESTING MULTIPLE DATABASE MANAGEMENT SYSTEMS

Shanti Subramanyam, Saratoga, Calif., assignor to Sun Microsystems, Inc., Mountain View, Calif.

Filed Jul. 5, 1995, Ser. No. 498,792

Int. Cl.⁶ G06F *17/30*

U.S. Cl. 395—616 **7 Claims**

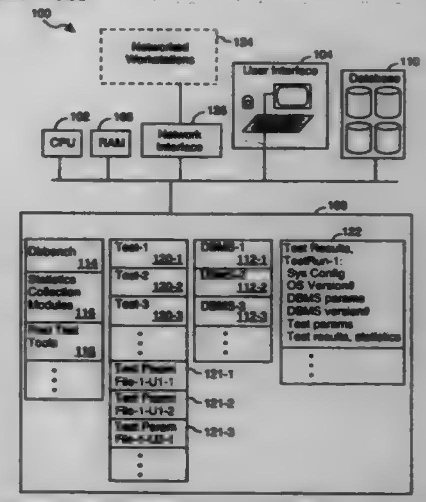

4. A method of benchmark testing database management systems (DBMS's), comprising the steps of:

storing in a computer memory DBMS specific files, including: performance statistics collection procedures for each said DBMS, task performance procedures for each said DBMS for executing database query operations and other DBMS operations, and environmental parameter definition files for each DBMS for specifying DBMS environmental parameters that control the configuration and operation of said each DBMS;

storing in said computer memory DBMS independent test scripts, each test script specifying operations to be performed by specified ones of said DBMS's so as to test performance of said ones of said DBMS's, and specifying performance statistics to be collected by said performance statistics collection procedures while said DBMS performs said specified operations;

executing user selected ones of said DBMS independent test scripts against user selected ones of said DBMS's and storing resulting benchmark test results in test result files, said benchmark test results including said specified performance statistics for each benchmark test executed by said system under the control of one of said test scripts, as well as information denoting the DBMS's tested, the test script used to perform the benchmark test and the operations performed by the DBMS tested, and said DBMS environmental parameters for the DBMS's tested; and

executing DBMS independent post test analysis procedures for analyzing the information stored in said test result files.

5,701,472

METHOD FOR LOCATING A VERSIONED OBJECT WITHIN A VERSION TREE DEPICTING A HISTORY OF SYSTEM DATA AND PROCESSES FOR AN ENTERPRISE

Paul Donald Koerber, Fountain Valley, and Ronald Jay Neubauer, Thousand Oaks, both of Calif., assignors to Unisys Corporation, Blue Bell, Pa.

Filed Jun. 9, 1995, Ser. No. 4[illegible]9,313

Int. Cl.[6] G06F *17/30*

U.S. Cl. 395—619 **16 Claims**

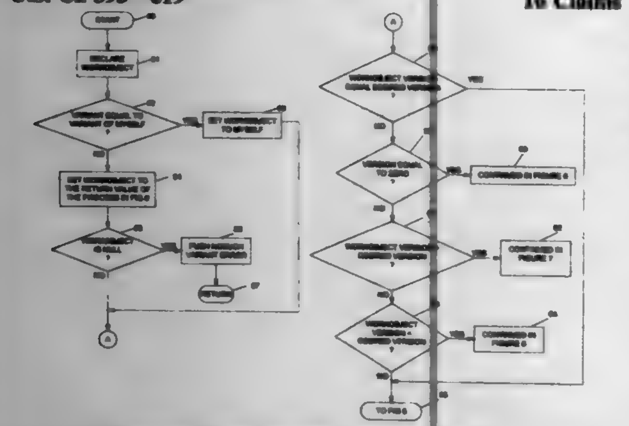

1. In a computer system having a user interface, a memory, a repository and a database, a repository program operating in said computer system for accessing said database, said repository program executing a method for locating a versioned object within a version tree depicting a history of objects stored in said repository, when a desired variant and desired version are provided, said method comprising the steps of:

a. declaring a variable workObject;

b. if the desired variant is equal to the variant of an object on which a requesting step is called, setting said workObject to said object;

c. if said desired variant is not equal to the variant of said object on which said requesting step is called, setting said workObject to a root object;

d. if said workObject is null, pushing a noSuchVariant error onto a notification stack and exiting said method;

e. if said workObject is not null, determining direction for searching said version tree using the desired version and the version of said workObject;

f. if said workObject is visible, returning said workObject as the desired version;

g. if said workObject is not visible and the desired version is equal to zero, determining if said workObject has previous versions;

h if said workObject has no previous versions, returning a null object.

5,701,473

SYSTEM FOR OPTIMALLY STORING A DATA FILE FOR ENHANCED QUERY PROCESSING

David L. Braseth, Lino Lakes; Glen P. Eiden, Oak Grove, and Ronald Q. Smith, St. Paul, all of Minn., assignors to Unisys Corporation, Blue Bell

Filed Mar. 17, 1995, Ser. No. 406,278

Int. Cl.[6] G06F *17/30*

U.S. Cl. 395—621 **13 Claims**

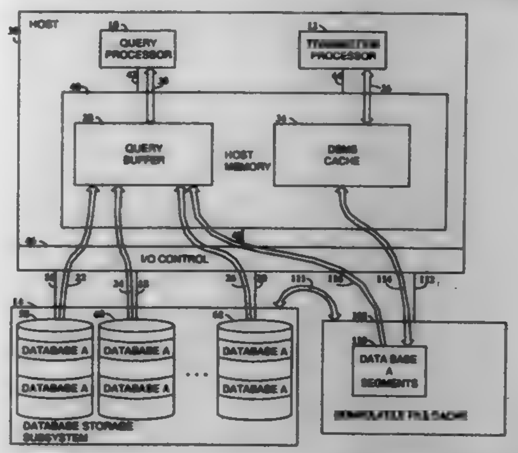

1. In a data processing system having an instruction processor for performing a query against a database data file and a plurality of disks coupled to the data processing system and accessible to the instruction processor, a computer implemented method for automatically establishing storage for the data file for enhanced query processing performance, comprising the steps of:

obtaining a predetermined data rate, quantified as a predetermined unit of data per predetermined unit of time, at which an instruction processor is capable of processing a query against the database;

selecting a set of disks from the plurality of disks that are accessible to the instruction processor and that have a combined data transfer rate to the instruction processor that is greater than or equal to said data rate; and

allocating storage for the data file on said set of disks.

5,701,474

CONVERTING HANDLE-BASED FIND FIRST/FIND NEXT/FIND CLOSED TO NON-HANDLE BASED FIND FIRST/FIND NEXT

James M. Harper, Colorado Springs, Colo., assignor to Sun Microsystems, Inc., Mountain View, Calif.

Filed Mar. 29, 1996, Ser. No. 622,885

Int. Cl.[6] G06F *17/30*

U.S. Cl. 395—621 **11 Claims**

1. Apparatus for converting handle-based finding operations into non-handle-based finding operations for search operations in an operating system in a computing system, said apparatus responsive to a search operation specifying a file search path and comprising:

a find first module responsive to a find first call from a program module, said find first module locating a search block for use in storing file identification information for a first file in the file search path and marking the search block as "in use" when the first file is found and the file identification for the first file is loaded into the search block;

said find first module generating a handle identifying the search block in use;

a find next module responsive to the handle and responsive to a find next call from the program module, said find next module converting the handle into a search block address; and

said find next module locating the search block from the search block address and using the search block to store the file identification information for a next file in the file search path

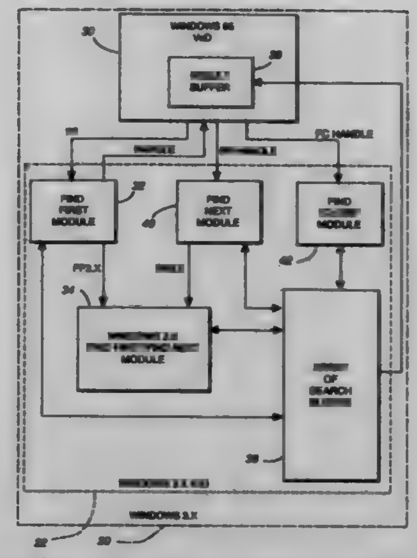

and said find next module converting the handle and locating the search block until the finding operations are closed.

5,701,475

EYEPIECE LENS

Saburo Sugawara, Kanagawa-ken, Japan, assignor to Canon Kabushiki Kaisha, Tokyo, Japan

Filed Aug. 10, 1995, Ser. No. 513,393

Claims priority, application Japan, Aug. 31, 1994, 6-206791

Int. Cl.[6] G02B *25/00;3/02;9/12*

U.S. Cl. 359—644 **21 Claims**

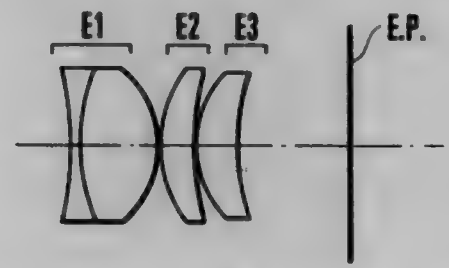

1. An eyepiece lens comprising, from front to rear, a first lens unit of positive refractive power having a negative lens and a positive lens, a second lens unit of positive refractive power and a third lens unit of positive refractive power, wherein at least one of the lens surfaces in said first lens unit to said third lens unit is made to be an aspheric surface, and

wherein said aspheric surface is formed to such shape that a positive refractive power gets progressively weaker toward the margin, or a negative refractive power gets progressively stronger toward the margin.

5,701,476

METHOD AND APPARATUS FOR DYNAMICALLY LOADING A DRIVER ROUTINE IN A COMPUTER MEMORY

Russell J. Fenger, Aloha, Oreg., assignor to Intel Corporation, Santa Clara, Calif.

Filed Nov. 29, 1994, Ser. No. 346,038

Int. Cl.[6] G06F *9/445*

U.S. Cl. 395—652 **20 Claims**

1. A method for dynamically loading a device driver in a computer system memory, said method comprising the steps of:

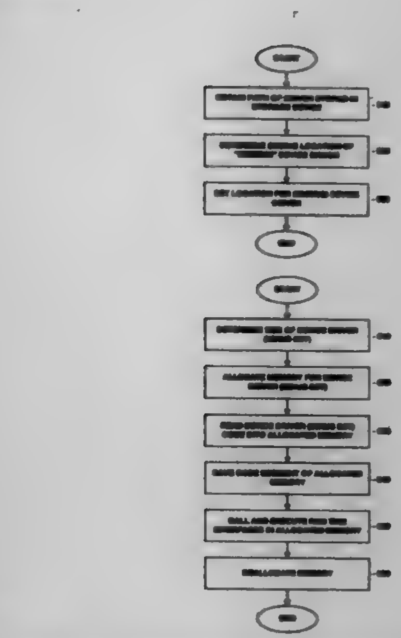

loading an initial copy of the device driver from a storage device into said computer system memory during an initialization period;

initializing said device driver;

upon initialization, retaining a minimum resident subset of the device driver in said computer system memory using the initial copy, thereby reducing the amount of computer system memory required to store said device driver;

loading a subsequent copy of said device driver from said storage device into said computer system memory when execution of said device driver is required after said initialization period, said subsequent copy of said device driver comprising at least said minimum resident subset and a dynamically loaded subset of the device driver; and

executing said device driver utilizing both said minimum resident subset of the device driver of the initial copy and said dynamically loaded subset of said device driver of the subsequent copy.

5,701,477

METHOD AND APPARATUS FOR MASTER BOOT RECORD SHADOWING

Edward John Chejlava, Jr., San Bruno, Calif., assignor to Cirrus Logic, Inc., Fremont, Calif.

Filed Mar. 30, 1995, Ser. No. 413,234

Int. Cl.[6] G06F *9/06*

U.S. Cl. 395—652 **39 Claims**

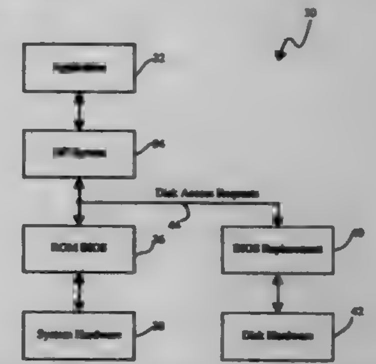

1. An apparatus for providing a Basic Input/Output System extension routine, comprising:

a memory for storing instruction sequences by which the Basic Input/Output System is processed, the memory including a Read Only Memory Basic Input/Output System;
a disk system for storing information used by the Read Only Memory Basic Input/Output System to boot an operating system; and
a processor for executing the stored instruction sequences;
wherein the stored instruction sequences include process steps to cause the processor to: (a) transfer the Master Boot Record from a first location on the disk system to a second location on the disk system, wherein the first location is different from the second location, (b) load a plurality of Basic Input/Output System extension routines from the disk system into the memory; and (c) replace a plurality of interrupt vectors in an interrupt table with addresses pointing to the plurality of Basic Input/Output System extension routines.

5,701,478
COMPUTER CONTROL DEVICE FOR USE WITH A TV GAME MACHINE ALLOWING BIOS PROGRAM EXECUTION FROM TV GAME PROCESSOR ADDRESS SPACE
Yi-Rong Chen, Taipei, Taiwan, assignor to Brasil International (Taiwan) Corp., Taipei, Taiwan
Filed May 4, 1995, Ser. No. 433,747
Int. Cl.⁶ G06F *9/06*
U.S. Cl. 395—652 **16 Claims**

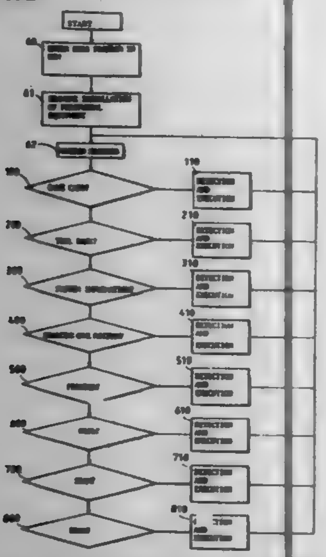

1. A computer control device for use with a TV game machine, and comprising a computer control main unit, wherein:
said TV game machine comprises a circuit board on the inside, and a slot on the outside for the connection of said computer control main unit, said circuit board comprising at least one microprocessor and at least one SRAM;
said computer control main unit comprises at least one ASIC, said at least one ASIC being respectively connected to the slot on said TV game machine by an address bus, a data bus, and a control bus, and respectively connected to said computer control main unit by an address bus and a data bus;
said computer control main unit uses the bus signal of the microprocessor of said TV game machine and through the address decoding by the switching circuit of said at least one ASIC to let the BIOS program in said ROM be loaded to an address space in the at least one SRAM of said TV game machine and to let the internal program of the microprocessor of said TV game machine trip to said address space to execute the BIOS program, then to let the BIOS program of said ROM shift a first address space to a second address space by means of the execution of said switching circuit so as to let the addresses required for the BIOS program of said ROM and connected peripheral equipment be allocated in said second address space, and then to let the stored BIOS program enter said second address space to proceed the execution, so as to operate said computer control main unit by means of the execution of the BIOS program and the internal members of said TV game machine.

5,701,479
PIPELINED IMAGE PROCESSING SYSTEM FOR A SINGLE APPLICATION ENVIRONMENT
Dennis L. Venable, Rochester, N.Y., and Takashi Nagao, Kanagawa, Japan, assignors to Xerox Corporation, Stamford, Conn., and Fuji Xerox Company, Ltd., Tokyo, Japan
Continuation-in-part of Ser. No. 76,678, Jun. 15, 1993, Pat. No. 5,557,795. This application Mar. 10, 1995, Ser. No. 402,225
Int. Cl.⁶ G06F *9/455*
U.S. Cl. 395—670 **23 Claims**

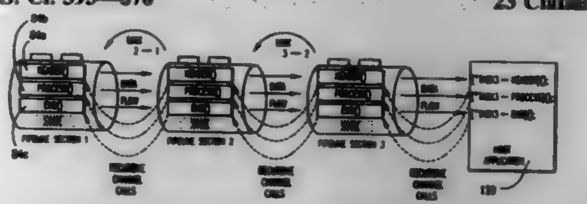

1. A data processing system for pipeline data processing of a data unit, the data unit comprising a header portion and a body portion, the body portion comprising a plurality of data sets, the data processing system comprising:
a single tasking processor;
a memory;
memory management means for allocating blocks of the memory;
library means for storing data processing functions; and
host application means for creating a data processing pipeline and obtaining processed data from the pipeline, comprising:
instantiating means for creating a data processing pipeline of linked data processing tasks, each task being stored in a memory block of memory, each task being an instantiation of a data processing function from the library means, and
invoking means for requesting data sets from the data processing pipeline, and
wherein each task of said data processing pipeline comprises:
link means for linking the task to at least one of another task in the pipeline, a data source, and the host application,
data channel means for passing data sets between the tasks,
external port means for providing header data from within the task to at least one of another task and the host application,
header data obtaining means for obtaining header data from one of a data source, another task, and a header data generator via the external port means,
initializing means for initializing the task based upon the header data upon instantiation,
external procedure generating means for generating an external procedure callable by at least one of another task and the host application, the external procedure providing header data from within the task to the host application or task that calls the external procedure, and
data obtaining means for obtaining data sets from one of the data source, another task, and a data set generator.

5,701,480
DISTRIBUTED MULTI-VERSION COMMITMENT ORDERING PROTOCOLS FOR GUARANTEEING SERIALIZABILITY DURING TRANSACTION PROCESSING
Yoav Raz, Newton, Mass., assignor to Digital Equipment Corporation, Maynard, Mass.
Continuation-in-part of Ser. No. 778,254, Oct. 17, 1991, abandoned. This application Apr. 14, 1993, Ser. No. 47,271
Int. Cl.⁶ G06F *15/00*
U.S. Cl. 395—671 **34 Claims**

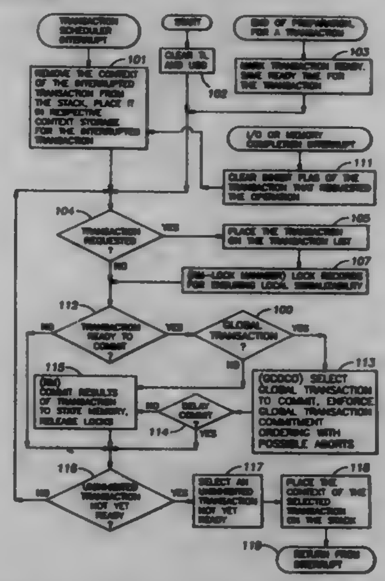

1. A method of operating a digital computer to process read-write transactions and read-only transactions in a computer system, said method comprising the steps of:
a) beginning preparation of results of said transactions;
b) determining an order of conflicts among said read-write transactions;
c) committing to memory state of said computer system prepared results of a selected one of said read-write transactions;
d) aborting an abort set of said read-write transactions for which commitment is contrary to said order of conflicts and said committing to memory state of said computer system said prepared results of said selected one of said read-write transactions;
e) retaining a prior version of memory state of said computer system existing prior to being updated by said prepared results of said selected one of said read-write transactions; and
f) permitting selected ones of said read-only transactions to read said prior version of memory state after said prepared results of said selected one of said read-write transactions are committed to memory state of said computer system, while preventing said read-write transactions from reading said prior version of memory state after said prepared results' of said selected one of said read-write transactions are committed to memory state of said computer system.

5,701,481
DATA PROCESSING APPARATUS WHICH OPERATES IN A PLURALITY OF OPERATION MODES AND INCLUDES FIRST AND SECOND MONITORING MEANS
Masao Hosaka, Sagamihara; Yoshimasa Kimura, Kawasaki, and Hisashi Sakamaki, Yokohama, all of Japan, assignors to Canon Kabushiki Kaisha, Tokyo, Japan
Division of Ser. No. 430,603, Apr. 28, 1995, Pat. No. 5,499,370, which is a continuation of Ser. No. 29,297, Mar. 8, 1993, abandoned, which is a continuation of Ser. No. 391,719, Aug. 7, 1989, abandoned, which is a continuation of Ser. No. 615,106, May 19, 1984, abandoned. This application Aug. 1, 1995, Ser. No. 509,723
Claims priority, application Japan, May 31, 1983, P58-97273; May 31, 1983, P58-97274
Int. Cl.⁶ G06F *9/00*
U.S. Cl. 395—676 **8 Claims**

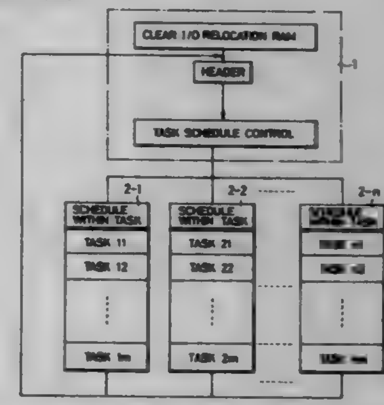

1. A data processing apparatus which operates in a plurality of operation modes comprising:
program memory means for storing a plurality of program modules each for one of a plurality of tasks to be executed in the plurality of operation modes, at least one of the tasks being common to at least two of the operation modes;
first monitor means for monitoring an execution status of the plurality of operation modes and a condition of said apparatus;
a plurality of second monitor means each for monitoring execution statuses of tasks to be executed in respective operation modes in accordance with an execution order of the tasks;
mode selection means for selecting one of the plurality of operation modes and activating one of the second monitor means corresponding to a selected operation mode on the basis of a monitoring result by said first monitor means;
task selection means for selecting a task to be executed next on the basis of the execution statuses monitored by said second monitoring means; and
execution means for executing a program module corresponding to the task selected by said task selection means.

5,701,482
MODULAR ARRAY PROCESSOR ARCHITECTURE HAVING A PLURALITY OF INTERCONNECTED LOAD-BALANCED PARALLEL PROCESSING NODES
R. Loyd Harrison, Fullerton, and Steven P. Davies, Ontario, both of Calif., assignors to Hughes Aircraft Company, Los Angeles, Calif.
Continuation of Ser. No. 116,432, Sep. 3, 1993, abandoned. This application Nov. 6, 1995, Ser. No. 553,963
Int. Cl.⁶ G06F *15/16;9/40*
U.S. Cl. 395—675 **7 Claims**

1. An expandable modular array processor architecture comprising:
a plurality of processing nodes, wherein at least one of said plurality of processing nodes is operable to perform system startup and, wherein each processing node comprises:

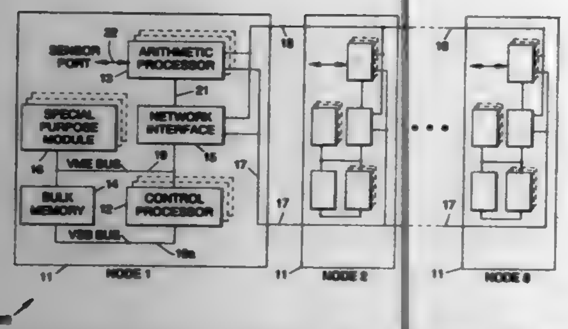

an arithmetic processor having an input/output port for high speed receiving of data or transmitting of data from an external source that is to be processed, and dedicated local memories, said arithmetic processor further operable to execute signal processing primitive functions;

a control processor for controlling processing activity for all processors contained in the plurality of processing nodes and reallocate tasks assigned for processing in its node to available processors in other nodes based on a predetermined set of rules that are implemented by means of a heuristic task scheduling program, said control processors operable upon system startup to perform self tests and then tests of said processing nodes;

a large capacity node memory that also comprises a portion of a distributed global memory, said large capacity node memory operable to store intermediate data and results; and

a network interface coupled between the control processor, the arithmetic processor and the node memory;

a data bus coupled between respective arithmetic processors and network interfaces of each of the plurality of processing nodes; and

a control bus coupled between the respective arithmetic processors and network interfaces of each of the plurality of processing nodes;

wherein respective network interfaces link the respective arithmetic processors, node memories and control processors together to provide for communication therebetween and permit each node to communicate with respective node memories of all other processing nodes to provide for load balancing therebetween, and to buffer data transferred over the data and control buses to a respective node, and to operate as high-speed DMA controllers to transfer data between the arithmetic processor and node memory of a processing node independent of the control processor in that node.

5,701,483

DATA ACESS IMPLEMENTATION OF DEVICE DRIVER INTERFACE

Sherman S. Pun, Sunnyvale, Calif., assignor to Sun Microsystems, Inc., Mountain View, Calif.

Continuation of Ser. No. 499,736, Jul. 7, 1995, abandoned. This application Jan. 24, 1997, Ser. No. 789,158

Int. Cl.[6] G06F *9/44*

U.S. Cl. 395—681 **23 Claims**

1. A method for achieving portability of a device driver between at least two host computers for communicating with a device having first data access attributes, the driver having computer instructions for execution by a host computer having second data access attributes and a memory storing the computer instructions of the driver, the method comprising the steps of:

allocating memory space in a device driver interface (DDI) environment for a handle;

selecting, by the DDI environment, at least one of at least two DDI data access function implementations, wherein the selected implementation accounts for differences between the first and second data access attributes;

storing, by the DDI environment, information in the handle for accessing the selected DDI data access function implementation; and

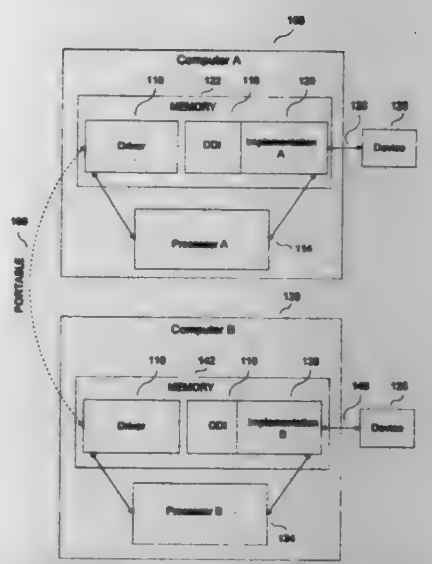

passing, by the DDI environment, a handle pointer to the driver for opaque access by the driver to the device through the DDI environment, the DDI environment using the information in the handle for invoking the selected DDI data access function implementation, the driver having no information about the second data access attributes.

5,701,484

ROUTING OBJECTS ON ACTION PATHS IN A DISTRIBUTED COMPUTING SYSTEM

Yeshayahu Artsy, Nashua, N.H., assignor to Digital Equipment Corporation, Maynard, Mass.

Continuation of Ser. No. 525,970, May 18, 1990, abandoned. This application Mar. 4, 1993, Ser. No. 26,624

Int. Cl.[6] G06F *13/00;15/21;15/56*

U.S. Cl. 395—683 **19 Claims**

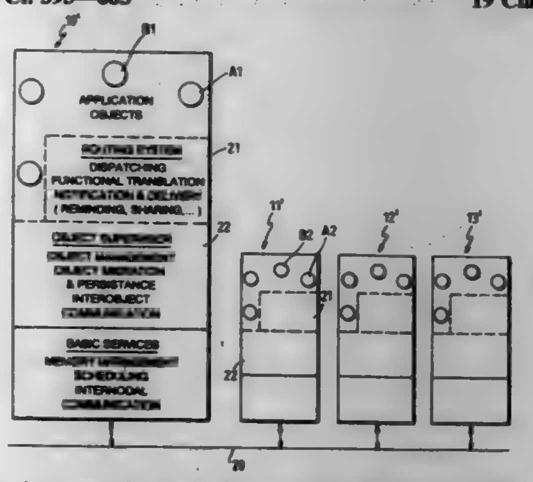

12. A system for handling a routed object in a distributed computing network, said system having a plurality of nodes, each node including a digital processor, said routed object having an action path object attached thereto, the action path object defining a sequence of action stops for the routed object, said action path object also defining a functional description of an organization structure or role of a principal associated with one of said nodes; said system comprising:

(a) said digital processor at said one of said nodes including means for providing basic services, said means for providing basic services including means for memory management and means for internodal communication;

(b) said digital processor at said one of said nodes including an object supervisor means for supporting object-oriented applications, said object-oriented applications including applications composed of objects that are dispersed over multiple ones of said nodes and objects that are shared among the applications, said object supervisor means including means for creating objects, means for managing object migration and persistence, and means for managing interobject communication;

(c) said digital processor at said one of said nodes including routing means for routing objects between said nodes, said routing means being supported by said basic services and services of said object supervisor means, said routing means including

(i) receiving means for receiving said routed object and said action path object attached to said routed object, said one of said nodes being associated with one of said action stops in said sequence of action stops;

(ii) functional translation means for finding a name of said principal from said functional description of an organization structure or role associated with said one of said nodes;

(iii) notification means for notifying said principal when said routed object needs attention of said principal;

(iv) means for reminding a principal of said requested action if said requested action is not performed within a selected time period;

(v) action means for performing an action on said routed object by said principal, and when done, indicating so by generating a dispatch request; and

(vi) delivery means for performing a logical or physical move of said routed object to a next action stop in said sequence of action stops.

5,701,485

OBJECT ORIENTED DISPATCH AND SUPERCALL PROCESS AND ARRANGEMENT

Juan Guillen, Russell, and James M. Leask, Canata, both of Canada, assignors to Sybase, Inc., Emeryville, Calif.

Continuation of Ser. No. 479,785, Jun. 7, 1995, Pat. No. 5,600,838, which is a continuation of Ser. No. 184,492, Jan. 18, 1994, abandoned. This application Jan. 21, 1997, Ser. No. 786,816

Int. Cl.[6] G06F *9/40*

U.S. Cl. 395—683 **14 Claims**

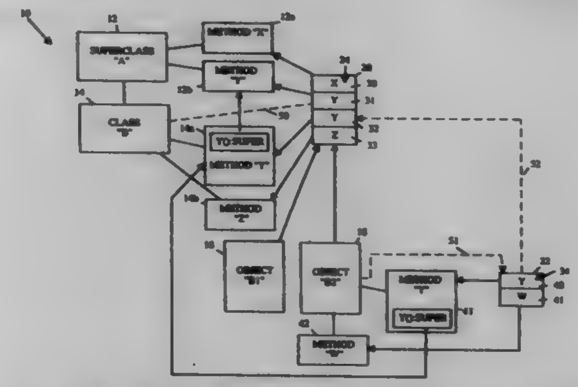

1. In a system for creating and using an object-oriented program created from object-oriented source listings in a computer, the source listings comprising a plurality of objects created as specific instances of object-oriented classes, each object-oriented class having class methods which are shared among objects instantiated from the object-oriented class, the program operating in response to messages received by objects, a process for invoking a method specific to a particular object instance of an object-oriented class, the process comprising:

creating instances of first and second objects, said first and second objects both being created from a particular object-oriented class, said first and second objects both having access to class methods which are shared among all objects instantiated from said particular object-oriented class;

creating an instance specific method for a select one of said first and second objects;

upon receipt by said first object of a message calling a particular method, determining whether the particular method called is an instance specific method of said first object or a class method for both said first and second objects;

if the particular method called is determined to be an instance specific method of said first object or a class method for both said first and second objects, executing the method at said first object;

upon receipt by said second object of a message calling a particular method, determining whether the particular method called is an instance specific method of said second object or a class method for both said first and second objects;

if the particular method called is determined to be an instance specific method of said second object or a class method for both said first and second objects, executing the method at said second object; and

wherein each instance specific method is invoked upon receipt of a given message by a particular object instance associated with that method but not by other object instances of the class.

5,701,486

TRACING TECHNIQUE FOR APPLICATION PROGRAMS USING PROTECT MODE ADDRESSING

Todd Andrew Gilbertson, and Stephen Arthur Knight, both of Rochester, Minn., assignors to International Business Machines Corporation, Armonk, N.Y.

Continuation of Ser. No. 501,983, Mar. 29, 1990, abandoned. This application Dec. 8, 1993, Ser. No. 164,665

Int. Cl.[6] G06F *11/30*

U.S. Cl. 395—704 **17 Claims**

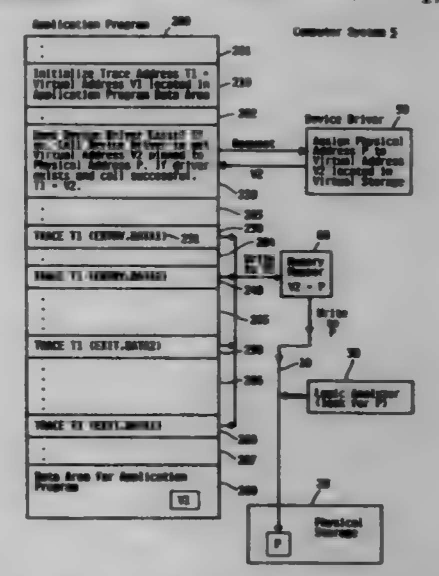

1. An application program for execution on a computer, wherein said computer has virtual storage addresses and physical storage addresses, to provide a tracing technique, said program comprising a computer readable recording medium and a plurality of computer executable instructions recorded thereon, said computer executable instructions comprising:

initializing means for initializing a trace address equal to a first virtual address contained in a data area under the control of said application program;

determining means, responsive to said initializing means, for determining whether a device driver exists, wherein said device driver has the capability to convert a first physical address into a second virtual address, and wherein when said device driver exists, said determining means requests said second virtual address from said device driver and reinitializes said trace address to be equal to said second virtual address;

first writing means, responsive to said determining means, for indicating the beginning of a first trace by writing a first trace data to said trace address; and

second writing means, responsive to said first writing means, for indicating the end of said first trace by writing a second trace data to said trace address.

5,701,487

METHOD AND APPARATUS FOR DISPLAYING LOCATIONS OF ERRORS DETECTED INSIDE SOFTWARE MACRO CALLS

Leonid M. Arbouzov, Novosibirsk, Russian Federation, assignor to Sun Microsystems, Inc., Mountain View, Calif.

Filed Mar. 27, 1995, Ser. No. 410,672

Int. Cl.⁶ G06F *9/45*

U.S. Cl. 395—704 **18 Claims**

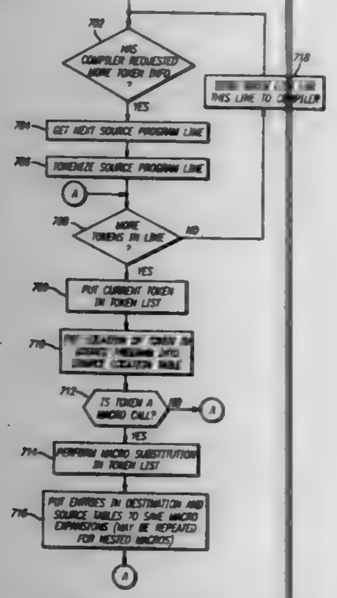

1. A method for displaying an error message that includes history of a macro expansion of a source program when an error is detected during compilation of the source program, comprising the steps, performed by a computer system, of:

compiling the source program to yield an object program, wherein the source program includes a macro definition and an instruction calling a macro defined in the macro definition, and wherein the compiling step includes a substep of expanding the instruction calling the macro;

generating history information in a memory for each token in the source program when performing the substep of expanding the macro, so that a location of each token, including the line number and the position within each line, in the source program of the macro definition and of the instruction calling the macro are saved;

determining whether an error occurred when the macro was expanded during the compiling step; and

printing an error message if an error occurred, in accordance with the saved history information, so that the error message specifically identifies the location of the error, including the line number and the position, within the source program for multiple lines of the macro expansion, the macro expansion including at least one line of the macro definition and at least the instruction calling the macro.

5,701,488

METHOD AND APPARATUS FOR RESTORING A TARGET MCU DEBUG SESSION TO A PRIOR STATE

Deepak Mulchandani, and Rand Gray, both of Austin, Tex., assignors to Motorola, Inc., Schaumburg, Ill.

Filed Jun. 7, 1995, Ser. No. 485,333

Int. Cl.⁶ G06F *9/455;11/00*

U.S. Cl. 395—704 **4 Claims**

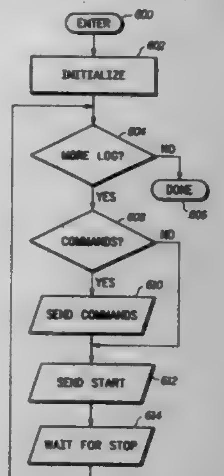

1. A method for restoring a Debug Session between a Host Debugger and a Target MCU to a previous state, said method comprising the steps of:

a) initializing the Target MCU to a Known Initial State;

b) providing a First Series of Debug Commands to the Host Debugger;

c) transmitting from the Host Debugger to a Station Controller the First Series of Debug Commands given to the Host Debugger;

d) executing the First Series of Debug Commands given to the Host Debugger, driving the Target MCU from the Known Initial State to a Target State;

e) writing the First Series of Debug Commands given to the Host Debugger into a Command History Trace;

f) reinitializing the Target MCU to the Known Initial State;

g) reading the First Series of Debug Commands previously written to the Command History Trace;

h) transmitting from the Host Debugger to the Station Controller the First Series of Debug Commands read from the Command History Trace; and

i) executing the First Series of Debug Commands read from the Command History Trace, driving the Target MCU from the Known Initial State to the Target State.

5,701,489

SYSTEM FOR PARTIAL IN-LINE EXPANSION OF PROCEDURE CALLS DURING PROGRAM COMPILATION

Cary Lee Bates, and Blair Wyman, both of Rochester, Minn., assignors to International Business Machines Corporation, Armonk, N.Y.

Filed Jun. 6, 1995, Ser. No. 466,532

Int. Cl.⁶ G06F *9/45*

U.S. Cl. 395—705 **15 Claims**

1. A computer-implemented method for converting a source code computer program into a machine-readable object code, said method comprising the steps of:

receiving said source code computer program for conversion;

in response to a first procedure call having a corresponding first procedure body having an execution cost greater than a predetermined execution cost, replacing in said first procedure body a higher-cost portion of said first procedure body with a lower-cost second procedure call to a second procedure body containing said higher-cost first procedure body portion; and

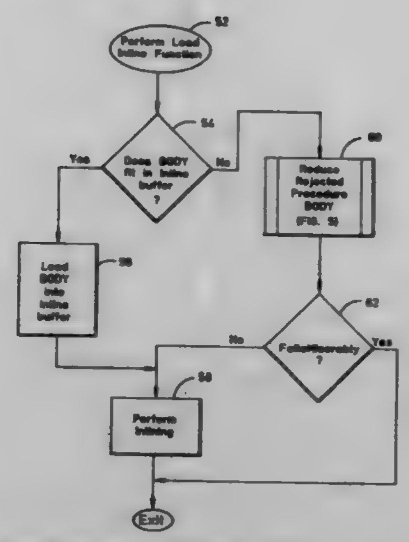

replacing said first procedure call in said source code computer program with said corresponding first procedure body.

5,701,490

METHOD AND APPARATUS FOR COMPILER SYMBOL TABLE ORGANIZATION WITH NO LOOKUP IN SEMANTIC ANALYSIS

Vladimir Olegovich Safonov, St. Petersburg, Russian Federation, assignor to Sun Microsystems, Inc., Palo Alto, Calif.

Filed Jan. 16, 1996, Ser. No. 585,805

Int. Cl.⁶ G06F *9/45*

U.S. Cl. 395—705 **12 Claims**

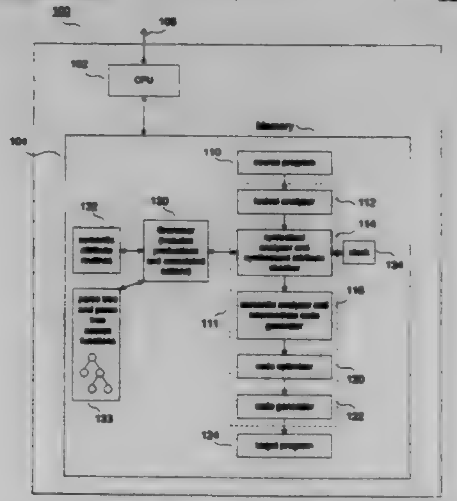

1. A method of compiling a source program, comprising the steps, performed by a data processing system having a memory, of:

inputting the source program;

generating a parse tree node for the source program in the memory;

storing in the parse tree node a pointer into an ID table in memory that contains a pointer to an NL table entry for an identifier in the source program; and

performing a semantic analysis of the source program using the pointer stored in the parse tree node to access the NL table entry for the identifier.

5,701,491

METHOD AND SYSTEM FOR TRANSITIONING THE NETWORK MODE OF A WORKSTATION

John C. Dunn, Redmond, and Forrest C. Foltz, Woodinville, both of Wash., assignors to Microsoft Corporation, Inc., Redmond, Wash.

Filed May 31, 1995, Ser. No. 455,536

Int. Cl.⁶ G06F *9/44;9/445*

U.S. Cl. 395—712 **11 Claims**

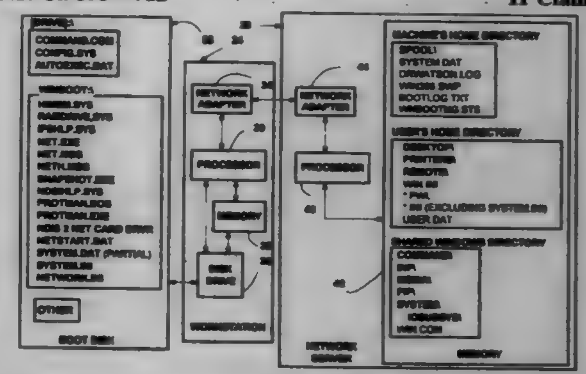

1. In a computer network system having at least one client workstation connected to a network server, a method of transitioning a client from a first network net operating in a first mode to a second network net operating In a second mode different from the first mode, comprising the steps of:

loading a first operating system into a memory of the client workstation;

saving the state of the client workstation and thereafter enabling the first network net;

connecting the client workstation to the network server for communication therewith using the first network net;

transmitting by the client workstation using the first network net a request to the network server for files associated with a second operating system and second network net;

receiving at the client workstation using the first network net files associated with the second operating system and second network net and

loading the second operating system and second net into the memory of the client workstation when the first operating system and first network net remain in said memory;

restoring the state of the client workstation and disabling the first network net; and

enabling the second network net.

5,701,492

FAIL-SAFE FLASHING OF EPROM

Robert D. Wadsworth, Costa Mesa, and Daniel A. Danknick, Orange, both of Calif., assignors to Canon Kabushiki Kaisha, Tokyo, Japan

Filed Mar. 29, 1996, Ser. No. 625,033

Int. Cl.⁶ G06F *9/06;12/14*

U.S. Cl. 395—712 **14 Claims**

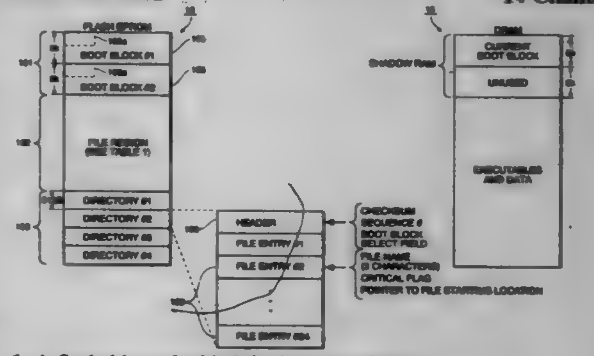

1. A flashable embedded device comprising:

a flashable EPROM arranged into separately erasable sectors, the EPROM being divided into at least three regions including a boot block region, a file region and a directory region;

wherein said file region has stored therein plural executable files of program instruction sequences;

wherein said directory region has stored therein at least two directories including a current directory, each of the directories having a boot block select field and file entries which identify at least some of the files stored in said file region; and

wherein said boot block region has stored therein at least two boot blocks, one of which begins at a predesignated address, and which contains process steps which scan said directory region to identify the current directory, and to identify the boot block select field of the current directory;

said flashable embedded device further including a DRAM into which executable program instruction sequences may be copied from said EPROM; and

a microprocessor for executing program instruction sequences commencing at power application from the predesignated address in said EPROM;

wherein upon power application, said microprocessor commences execution of program instruction steps at the predesignated address of said EPROM so as to scan said directory region to determine the current directory, to select one boot block from said boot block region based on the boot block select field of the current directory, to complete execution of the selected boot block whereby at least some files stored in said file region and listed in the current directory of said directory region are transferred to said DRAM, and to commence execution of said files stored in DRAM.

5,701,493

EXCEPTION HANDLING METHOD AND APPARATUS IN DATA PROCESSING SYSTEMS

David Vivian Jaggar, Cambridge, United Kingdom, assignor to Advanced Risc Machines Limited, Cambridge, United Kingdom

Filed Aug. 3, 1995, Ser. No. 510,705

Int. Cl.^{6} G06F *9/46*

U.S. Cl. 395—734 **16 Claims**

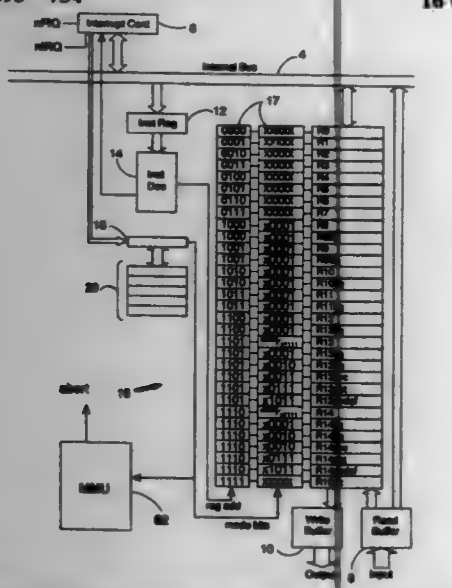

1. Apparatus for processing data, said apparatus being switchable between operation in a user mode, an exception mode and a system mode, said apparatus comprising:

(i) a program counter register for storing data indicative of an address of a currently executing program instruction;

(ii) a set of user mode registers for storing data to be manipulated during said user mode, operation in said user mode allowing access to a set of standard resources within said apparatus;

(iii) at least one exception mode register for storing data to be manipulated during said exception mode, operation in said exception mode allowing access to a set of privileged resources within said apparatus;

(iv) an exception controller for switching operation from said user mode to said exception mode upon occurrence of an exception, said exception controller being non-responsive to a further occurrence of said exception whilst said apparatus is operating in said exception mode;

(v) means for storing as a return address said data indicative of an address of a currently executing program instruction into one of said at least one exception mode register serving as a return address register upon entering said exception mode;

(vi) means for redirecting read requests and write requests from a respective corresponding one of said set of user mode registers to said at least one exception mode register when operating in said exception mode;

(vii) means for switching operation from said exception mode to said system mode upon execution of a first mode switching program instruction within said exception mode, operation in said system mode being responsive to further exceptions and utilising said set of user mode registers and allowing access to said set of privileged resources within said apparatus;

(viii) means for switching operation from said system mode to said exception mode upon execution of a second mode switching program instruction within said system mode;

(ix) means for restoring said return address stored in said return address register to said program counter register upon leaving said exception mode; and

(x) means for switching operation from said exception mode to said user mode upon execution of a third mode switching program instruction within said exception mode.

5,701,494

MICROPROCESSOR WITH MULTIPLE SUPERVISOR INTERRUPT PROCESSING FUNCTION

Shuji Satoh, Tokyo, Japan, assignor to NEC Corporation, Tokyo, Japan

Filed May 24, 1996, Ser. No. 653,486

Claims priority, application Japan, May 24, 1995, 7-124894

Int. Cl.^{6} G06F *9/46*

U.S. Cl. 395—735 **16 Claims**

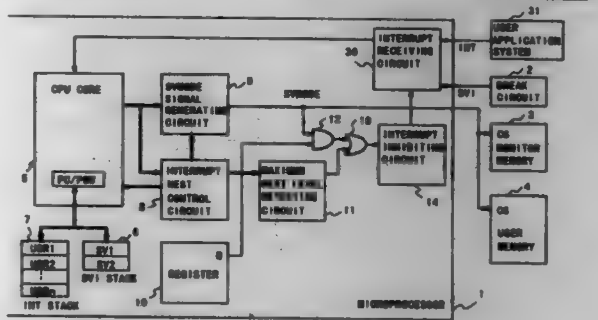

1. A microprocessor comprising:

an interrupt request receiving circuit;

reception control means for controlling said interrupt request receiving circuit to receive an interrupt request in response to a reception control signal; and

control means for setting a supervisor interrupt mode when a supervisor interrupt request is received by said interrupt request receiving circuit in a state in which any supervisor interrupt request is not yet received, to issue the reception control signal to said reception control means such that said reception control means inhibits said interrupt request receiving circuit from receiving any supervisor interrupt request in the supervisor interrupt mode, and such that said reception control means permits said interrupt request receiving means to receive any user interrupt request in the supervisor interrupt mode, and for setting a user interrupt mode when a user interrupt request is received by said interrupt request receiving circuit in the supervisor interrupt mode, to issue the reception control signal such that said reception control means permits said interrupt request receiving circuit to receive any supervisor interrupt request and another user interrupt request in the user interrupt mode.

5,701,495

SCALABLE SYSTEM INTERRUPT STRUCTURE FOR A MULTI-PROCESSING SYSTEM

Richard Louis Arndt; James Otto Nicholson; Edward John Silha; Steven Mark Thurber, and Amy May Youngs, all of Austin, Tex., assignors to International Business Machines Corporation, Armonk, N.Y.

Continuation of Ser. No. 124,182, Sep. 20, 1993, abandoned. This application Dec. 18, 1995, Ser. No. 573,918

Int. Cl.^{6} G06F *9/46*

U.S. Cl. 395—736 **25 Claims**

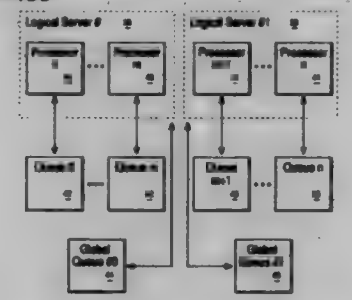

1. A system for processing interrupt requests within a data processing system having a plurality of processors and a plurality of interrupt sources, wherein each of said interrupt requests is associated with a priority and each of said plurality of processors is associated with a variable priority, said system comprising:

a software-accessible interrupt presentation layer including a plurality of queues for storing interrupt requests, wherein each of said plurality of queues is associated with a respective one of said plurality of processors, and wherein interrupt requests within each queue among said plurality of queues are only handled by a respective associated processor among said plurality of processors;

a hardware routing means for routing an interrupt request issued by a particular one of said plurality of interrupt sources to a particular queue among said plurality of queues that is associated with a particular processor among said plurality of processors; and

means for preventing priority inversion, wherein said means for preventing priority inversion removes said interrupt request from said particular queue in response to said interrupt request having a lower priority than said variable priority of said particular processor when another interrupt request having a higher priority than said variable priority of said particular processor is received by said particular queue and said particular queue is full.

5,701,496

MULTI-PROCESSOR COMPUTER SYSTEM WITH INTERRUPT CONTROLLERS PROVIDING REMOTE READING

P. K. Nizar, El Dorado Hills, Calif., and David Carson, Hillsboro, Oreg., assignors to Intel Corporation, Santa Clara, Calif.

Continuation of Ser. No. 643,734, May 6, 1996, Pat. No. 5,613,128, which is a continuation of Ser. No. 49,515, Apr. 19, 1993, abandoned, which is a continuation-in-part of Ser. No. 8,074, Jan. 22, 1993, Pat. No. 5,283,904, which is a continuation of Ser. No. 632,149, Dec. 21, 1990, abandoned. This application Sep. 17, 1996, Ser. No. 710,451

Int. Cl.^{6} G06F *13/26*

U.S. Cl. 395—739 **11 Claims**

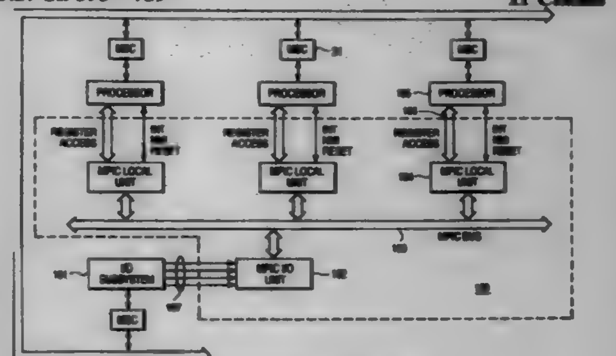

1. A multi-processor (MP) system comprising:

a system bus;

a plurality of processors that communicate on the system bus;

an interrupt bus;

a first interrupt controller coupled to the interrupt bus and to a first processor, the first interrupt controller having a control register that stores a value which controls acceptance of an interrupt request;

a second interrupt controller coupled to the interrupt bus and to a second processor, the second interrupt controller including logic that broadcasts a remote read message on the interrupt bus that requests the value stored in the control register from the first interrupt controller; and

the first interrupt controller further including logic that supplies the value of the control register on the interrupt bus in response to the remote read message, the second interrupt controller receiving the value across the interrupt bus.

5,701,497

TELECOMMUNICATION APPARATUS HAVING A CAPABILITY OF TRANSLATION

Satoshi Yamauchi, Yokohama; Hiroshi Tamura, Sagamihara; Takashi Katooka; Naoki Tsumura, both of Yokohama; Naoto Hikichi, Chofu; Chihiro Narumi, Ebina; Takashi Ezaki, Yokohama; Shozo Kado, Yokohama, and Yoshihisa Oogure, Yokohama, all of Japan, assignors to Ricoh Company, Ltd., Tokyo, Japan

Filed Oct. 26, 1994, Ser. No. 330,073

Claims priority, application Japan, Oct. 27, 1993, 5-269288; Dec. 28, 1993, 5-334479

Int. Cl.^{6} G06F *15/38*

U.S. Cl. 395—753 **21 Claims**

1. A telecommunication apparatus, comprising:

communication means for communicating with a remote terminal according to a communication protocol;

storage means for storing information received by said communication means, said information corresponding to a document and including at least one of image data and text data, said image data and text data forming said document written in a source language; and

translation means for translating said document from said source language to a target language,

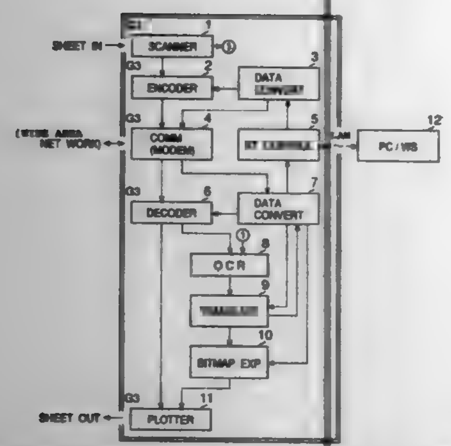

wherein said communication protocol includes a facsimile protocol;

said telecommunication apparatus further includes character recognition means for converting image data included in said information to corresponding text data, said character recognition means thereby distinguishing said image data from said text data in said information based upon said communication protocol;

said translation means has a capability of carrying out a translation in one or more language systems, each of said language systems including a source language and a target language; and

wherein said translation means includes: language identification means for identifying the source language from a command used in said communication protocol for notifying, to said telecommunication apparatus, of a terminal identification number identifying a terminal that is sending said information to said telecommunication apparatus, said translation means selectively activating a translation according to a language system that includes said source language thus identified by said language identification means.

5,701,498

METHOD AND APPARATUS FOR A STRUCTURED ASCII BROWSER FOR ONLINE PUBLICATIONS FORMATTED IN A BOOKMASTER FORMAT

Kenneth Edmund Goach, Jr.; Gregory Phillip Meyer, and Jeffrey Scott Sims, all of Austin, Tex., assignors to International Business Machines Corporation, Armonk, N.Y.

Filed Nov. 17, 1995, Ser. No. 560,415

Int. Cl.[6] G06F *17/30*

U.S. Cl. 395—762 **13 Claims**

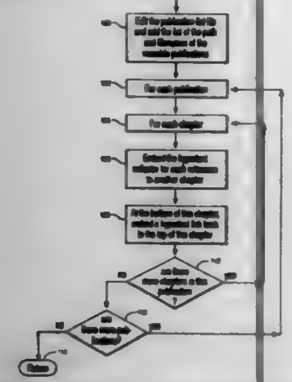

5. A method, implemented in a computer, of building a distributed index for a BOOKMASTER formatted document, comprising the steps of:

searching for chapter titles in the BOOKMASTER formatted document by a browser;

building an index of chapter titles in an ASCII format by opening and reading a line of the BOOKMASTER formatted document until a chapter delimiter is encountered in the formatted document;

searching for references to chapter titles in the formatted document by said browser;

embedding an indicator at each occurrence of a reference in the formatted document; and

linking the index and indicator to locations of the chapter titles in the formatted document by said browser.

5,701,499

METHOD AND SYSTEM FOR AUTOMATICALLY ENTERING A DATA SERIES INTO CONTIGUOUS CELLS OF AN ELECTRONIC SPREADSHEET PROGRAM OR THE LIKE

Brian Capson, St. John, Canada; Wes Cherry, Bellevue; Jon Devaan, Redmond, both of Wash.; Chris Duncan, Ithaca, N.Y.; Raymond E. Fowkes, Bellevue, Wash.; Christopher E. Graham, Redmond, Wash.; Lisa R. James, Bellevue, Wash., and Timothy W. McGuire, Jr., Issaquah, Wash., assignors to Microsoft Corporation, Redmond, Wash.

Filed Mar. 25, 1992, Ser. No. 857,534

Int. Cl.[6] G06T *1/00*

U.S. Cl. 395—764 **20 Claims**

1. A method of manipulating data in a computer system running a program under the operation of a user, the data having one of a plurality of possible data types, wherein the program uses a worksheet to store and manipulate data, the worksheet consisting of a grid of intersecting columns and rows, and wherein the intersection of each column and row is a cell which stores data, the method comprising the steps of:

selecting one or more source cells in the worksheet in response to user input, such that at least one source cell contains data;

selecting one or more destination cells in response to user input;

in response to selecting source cells and selecting destination cells, determining a data series wherein the program, under computer implementation, determines the data series by ascertaining the data type of the data in the one or more source cells, and by performing calculations using data in the source cells to determine data values for the destination cells and entering the determined data series into the destination cells.

5,701,500

DOCUMENT PROCESSOR

Joji Ikeo; Masaharu Ozaki; Tsuyoshi Tanaka; Katsuhiko Itonori, and Yuusuke Ishida, all of Kanagawa, Japan, assignors to Fuji Xerox Co., Ltd., Tokyo, Japan

Filed Jun. 1, 1993, Ser. No. 71,006

Claims priority, application Japan, Jun. 2, 1992, 4-165525; Jun. 9, 1992, 4-173707; Jul. 3, 1992, 4-198971

Int. Cl.[6] G06T *1/00*

U.S. Cl. 395—779 **31 Claims**

1. A document processor comprising:

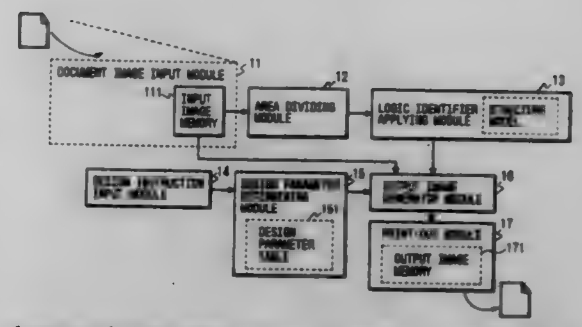

document image storing means for storing a raster image of a document;

area dividing means for dividing the entire document image received from said document image storing means into a plural number of image areas;

a memory for storing a document structure model;

comparing means for comparing the entire divided document image with the document structure model stored in the memory;

logic identifier applying means for applying, based on the comparison performed by the comparing means, logic identifiers having logic meanings of a document to each of the image areas of the document image received from said area dividing means;

design instruction input means for inputting design instructions based on acquired document design knowledge related to ease of reading and understanding document content;

design parameter determining means for determining, for each logic identifier, values of parameters on a document design of an output document according to instructions entered from said design instruction input means; and

output image generator means for processing the document images in the image areas having the logic identifiers applied thereto by said logic identifier applying means according to the parameter values determined by said design parameter determining means, which respectively correspond to the logic identifiers, and for generating an output image.

5,701,501

APPARATUS AND METHOD FOR EXECUTING AN ATOMIC INSTRUCTION

Jayanti L. Gandhi, Tempe, Ariz., assignor to Intel Corporation, Santa Clara, Calif.

Filed Feb. 26, 1993, Ser. No. 23,693

Int. Cl.[6] G06F *9/00*

U.S. Cl. 395—800 **12 Claims**

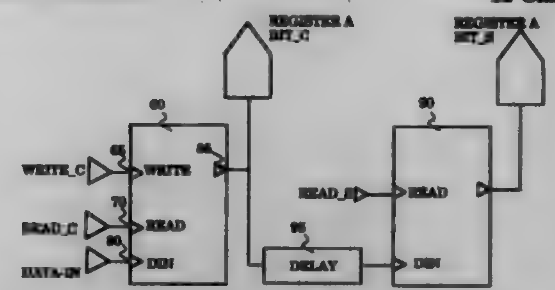

1. A system for executing atomic instructions comprising:

means for storing a plurality of instructions, comprising at least one atomic instruction;

processor means for executing instructions comprising;

means for setting and resetting a control bit in a visible register, which is read and write accessible by the user,

delay means coupled to the control bit for receiving the value of the control bit and delaying the output of the value of the control bit a predetermined amount of time,

means for setting and resetting a status bit which is read only accessible to a user in a visible register, said status bit coupled to the output of the delay means to receive the value of the control bit output by the delay means; and

control means for preventing subsequent instructions to be executed until the status bit is set to a first state;

wherein the atomic instruction completes execution within the predetermined amount of time and prior to execution of subsequent instructions.

5,701,502

ISOLATING A CENTRAL PROCESSING UNIT FROM THE OPERATING SYSTEM CONTROLLING SAID UNIT AND ITS ASSOCIATED HARDWARE FOR INTERACTION OF THE UNIT WITH DATA HANDLING APPARATUS ALIEN TO THE OPERATING SYSTEM

Ernest Dysart Baker, Boca Raton; John Monroe Dinwiddie, Jr., West Palm Beach; Lonnie Edward Grice; James Maurice Joyce, both of Boca Raton; John Mario Loffredo, Deerfield Beach, and Kenneth Russell Sanderson, West Palm Beach, all of Fla., assignors to International Business Machines Corporation, Armonk, N.Y.

Continuation of Ser. No. 234,706, Apr. 28, 1994, Pat. No. 5,388,215, which is a continuation of Ser. No. 885,718, May 11, 1992, abandoned, which is a continuation of Ser. No. 353,114, May 17, 1989, Pat. No. 5,155,809. This application Oct. 19, 1994, Ser. No. 326,822

Int. Cl.[6] G06F *15/20*

U.S. Cl. 395—800 **14 Claims**

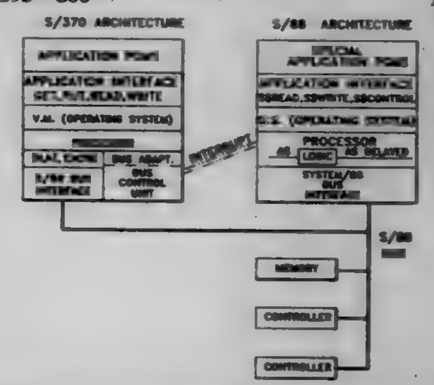

1. In a data processing system, a combination comprising:

a processor unit and associated hardware for processing information under control of an operating system;

information handling apparatus alien to the operating system; and

means isolating the processor unit from said operating system and coupling the processor unit to said apparatus for interaction with said apparatus.

5,701,503

METHOD AND APPARATUS FOR TRANSFERRING INFORMATION BETWEEN A PROCESSOR AND A MEMORY SYSTEM

Gurbir Singh; Wen-Hann Wang, both of Portland; Michael W. Rhodehamel, Beaverton; John M. Bauer, and Nitin V. Sarangdhar, both of Portland, all of Oreg., assignors to Intel Corporation, Santa Clara, Calif.

Continuation-in-part of Ser. No. 176,782, Jan. 4, 1994, abandoned. This application Dec. 21, 1994, Ser. No. 360,331

Int. Cl.[6] G06F *12/00*

U.S. Cl. 395—800 **22 Claims**

1. A method of transferring information between a processor and a cache memory via a bus, the method comprising the steps of:

(a) transferring a first portion of data corresponding to a write request from the processor to the cache memory during a first clock cycle;

(b) transferring a read request from the processor to the cache memory during a second clock cycle; and

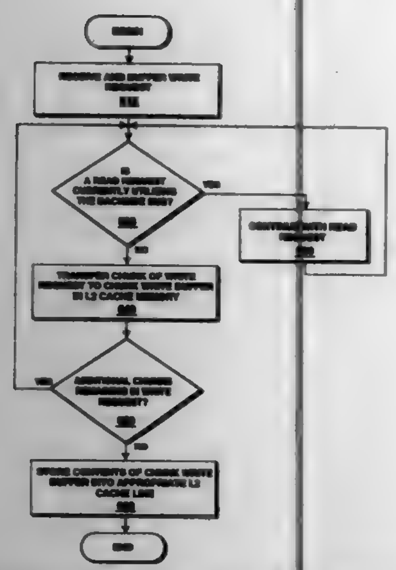

(c) transferring a second portion of data corresponding to the write request from the processor to the cache memory during a third clock cycle, wherein the second clock cycle is both subsequent to the first clock cycle and prior to the third clock cycle, and wherein the read request and the write request target different memory addresses.

5,701,504

APPARATUS AND METHOD FOR ADDITION BASED ON KOGGE-STONE PARALLEL ALGORITHM

Mark A. Timko, Portland, Oreg., assignor to Intel Corporation, Santa Clara, Calif.

Filed Dec. 28, 1994, Ser. No. 365,204

Int. Cl.⁶ G06F *15/00*

U.S. Cl. 395—800 **29 Claims**

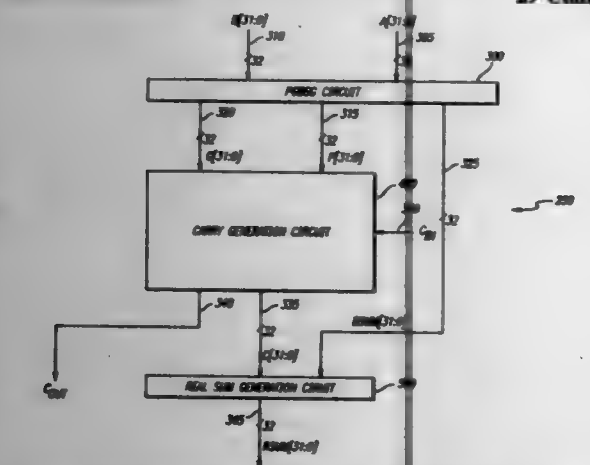

1. An integrated circuit device performing arithmetic operations on a first digital input and a second digital input, the integrated circuit device comprising:

a first circuit capable of performing logical operations on the first and second digital inputs to produce a plurality of bitwise propagate signals, a corresponding plurality of bitwise generate signals and a plurality of bit sums associated with the first and second digital inputs:

a second circuit coupled to said first circuit, said second circuit capable of performing logical operations on said plurality of bitwise propagate signals, said plurality of bitwise generate signals and a global carry signal to produce a plurality of bitwise carry signals; and

a third circuit coupled to said first and second circuits, said third circuit capable of performing logical operations on said plurality of bit sums and said plurality of bitwise carry signals generated by said second circuit in order to produce a plurality of real bit sums.

5,701,505

IMAGE DATA PARALLEL PROCESSING APPARATUS

Shigeki Yamashita; Yoshiyuki Hirayama, and Kazuhiro Suzuki, all of Saitama, Japan, assignors to Fuji Xerox Co., Ltd., Tokyo, Japan

Continuation of Ser. No. 119,628, Sep. 13, 1993, abandoned.

This application Mar. 27, 1995, Ser. No. 412,214

Claims priority, application Japan, Sep. 14, 1992, HEI. 4-244578

Int. Cl.⁶ G06F *15/00*

U.S. Cl. 395—800 **17 Claims**

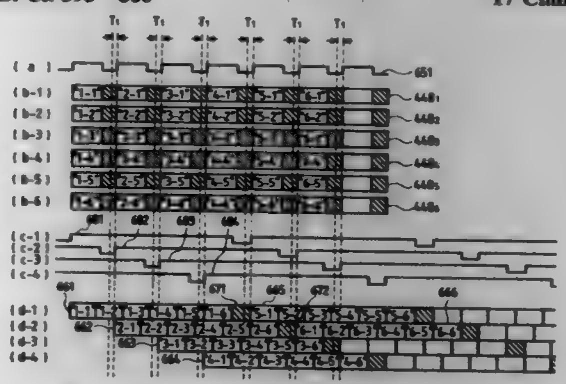

1. A parallel processing apparatus comprising:

dividing means for dividing parallel lines of first image data extending in a main scanning direction and constituting one page, into a plurality of blocks arranged in the main scanning direction to provide a plurality of first data streams;

first parallel processing means connected to the dividing means for processing the plurality of first data streams in parallel in response to a sync signal, from a sync signal generator, common to the plurality of first data streams, the processing of the plurality of first data streams including digitally altering the data streams by applying a digital image processing function; and

second parallel processing means connected to the first parallel processing means for rearranging the processed plurality of first data streams into a plurality of second data streams, each including successions of blocks of different first image data lines, and for processing the second data streams in parallel in response to respective second sync signals from the sync signal generator that are sequentially delayed by a predetermined time period.

5,701,506

MICROCOMPUTER HAVING ROM PROGRAM WHICH CAN BE ALTERED

Osamu Hosotani, Itami, Japan, assignor to Mitsubishi Denki Kabushiki Kaisha, Tokyo, Japan

Filed May 25, 1995, Ser. No. 452,612

Claims priority, application Japan, May 31, 1994, 6-118250

Int. Cl.⁶ G06F *9/00*

U.S. Cl. 395—800 **8 Claims**

1. A microcomputer in which a CPU outputs an address to an address bus, reads program data via a data bus from a memory of said address, and executes a program, comprising:

a ROM for storing said program executed by the CPU;

two address registers for storing the addresses of two locations in said ROM at which the stored contents are to be altered;

a RAM for storing the altered content at each of the two locations;

two match circuits respectively connected to said address registers, each of the match circuits comparing the address outputted from the CPU to the address bus and the addresses stored in said address registers, and outputting a signal corresponding to the result of the comparison;

a pair of start address storing means respectively connected to said match circuits, each of the start address storing means storing the start addresses of said two contents stored in said RAM, and outputting the start address stored therein when the match circuit connected thereto outputs a match signal indicating an address match as a result of the comparison;

op code storing means for storing an op code of a jump instruction for jumping from the program in said ROM to one of said altered contents stored in said RAM, said op code storing means outputting said op code when the match signal is outputted from one of said match circuits; and

connection control means connected to said match circuits, the connection control means connecting said ROM to the data bus and disconnecting said op code storing means and said start address storing means from the data bus when none of said match circuits outputs the match signal, and when one of the match circuits outputs the match signal, the connection control means disconnecting said ROM from the data bus and connecting said op code storing means and the start address storing means supplied with said match signal from said one match circuit to the data bus to output the op code and said start address which is an operand of the jump instruction on the data bus, wherein the CPU executing said ROM program reads said jump instruction op code and said start address of the RAM outputted on the data bus, jumps to said start address from said ROM program, and executes said altered content from said start address, wherein

said pair of start address storing means and said op code storing means are in areas of the ROM, and further comprising a decoder for decoding the outputs of said match circuits to ROM addresses, and means for controlling the output timing of said jump instruction op code and said start address from said ROM to said data bus, responsive to the input of the match signal from said match circuits.

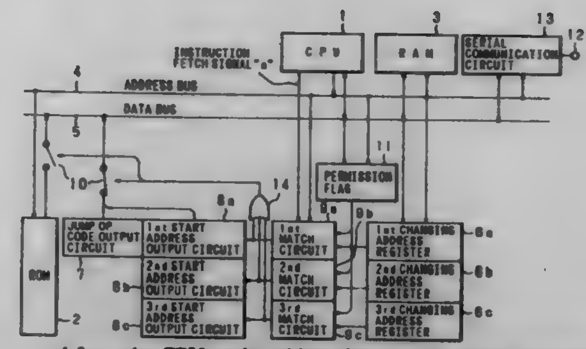

5,701,507

ARCHITECTURE OF A CHIP HAVING MULTIPLE PROCESSORS AND MULTIPLE MEMORIES

Walt C. Bonneau, Jr.; Karl Guttag, both of Missouri City, and Robert Gove, Dallas, all of Tex., assignors to Texas Instruments Incorporated, Dallas, Tex.

Continuation of Ser. No. 274,132, Jul. 12, 1994, which is a continuation of Ser. No. 813,857, Dec. 26, 1991, abandoned.

This application Jun. 7, 1995, Ser. No. 475,272

Int. Cl.⁶ H01L *21/70*

U.S. Cl. 395—800 **9 Claims**

1. A method of manufacturing integrated circuits using semiconductor chips, comprising the steps of:

a. making an architecture having multiple instances of a modular unit including a processor, a memory and a crossbar link disposed therebetween, said crossbar links of said modular units connected together providing direct communication between any processor and any memory of a predetermined maximum number of said multiple modular units, and having input/output pads for connecting said architecture to external circuits;

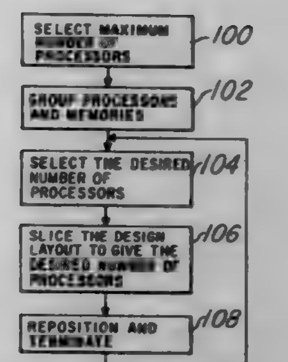

b. grouping said modular units into at least first and second groups, including in each group at least one of said modular units;

c. selecting a first desired number of modular units for a first integrated circuit;

d. slicing said architecture between any two groups, to give said selected number of modular units;

e. repositioning said input/output pads;

f. terminating said connection between crossbar links at said slicing between said two groups;

g. constructing an integrated circuit having said selected first desired number of modular units, said constructing step including

1. disposing a first subset of said selected first desired number of modular units on a first semiconductor chip and a second subset of said selected first desired number of modular units on a second semiconductor chip, and

2. bonding said first and second semiconductor chips together by connection of said crossbar links of a predetermined modular unit disposed on said first semiconductor chip and a predetermined modular unit disposed on said semiconductor second chip; and

h. repeating steps d, e, f and g for a second desired number of modular units;

wherein said first desired number of modular units is different from said second desired number of modular units, and wherein said integrated circuits have a majority of the same address and data pin-outs, regardless of said number of modular units chosen.

5,701,508

EXECUTING DIFFERENT INSTRUCTIONS THAT CAUSE DIFFERENT DATA TYPE OPERATIONS TO BE PERFORMED ON SINGLE LOGICAL REGISTER FILE

Andrew F. Glew, Hillsboro, Oreg.; Larry M. Mennemeier, Boulder Creek, Calif.; Alexander D. Peleg, Haifa, Israel; David Bistry, Cupertino, Calif.; Millind Mittal, South San Francisco, Calif.; Carole Dulong, Saratoga, Calif.; Eiichi Kowashi, Ibaraki, Japan; Benny Eitan, Haifa, Israel; Derrick Lin, Foster City, and Ramamohan R. Vakkalagadda, Fremont, both of Calif., assignors to Intel Corporation, Santa Clara, Calif.

Filed Dec. 19, 1995, Ser. No. 574,500

Int. Cl.⁶ G06F *9/00*

U.S. Cl. 395—800 **35 Claims**

1. In a data processing apparatus, a method for executing instructions comprising the steps of:

executing a first set of instructions of a first instruction type on the contents of a single logical register file, wherein said single logical register file is operated as a flat register file while executing said first set of instructions; and

executing a first instruction of a second instruction type also on the contents of said single logical register file, wherein said

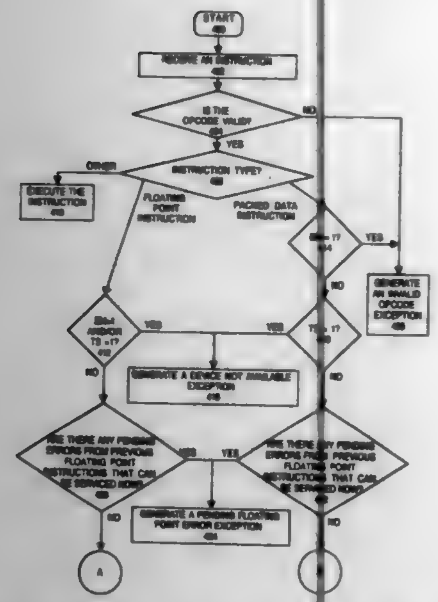

single logical register file is operated as a stack referenced register file while executing said first instruction.

5,701,509

PARALLEL PROCESSOR SYSTEM

Katsuyuki Kaneko, Osaka, Japan, assignor to Matsushita Electric Industrial Co., Ltd., Osaka, Japan

Division of Ser. No. 590,643, Jan. 24, 1996, which is a division of Ser. No. 366,378, Dec. 29, 1994, Pat. No. 5,511,221, which is a continuation of Ser. No. 913,358, Jul. 15, 1992, abandoned. This application Jan. 15, 1997, Ser. No. 783,178

Claims priority, application Japan, Jul. 16, 1991, 3-175419

Int. Cl.^{6} G06F *9/28;13/42*

U.S. Cl. 395—800 **1 Claim**

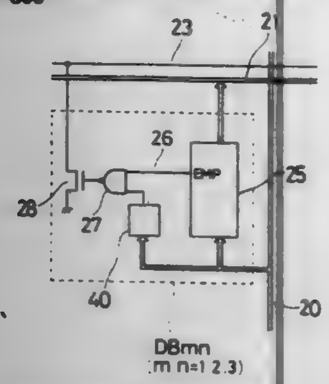

1. A parallel processor system comprising:

a first processor group including a plurality of first processors, each of said first processors providing a network port for sending data and a transmit completion signal for indicating completion of sending data,

a second processor group including a plurality of second processors, each of said second processors providing a network port for receiving data and a transmit completion detection signal for detecting completion of receiving data,

a data network for connection to said network port of said respective first processors and said respective second processors and for transferring data from said first processor group to said second processor group, including a plurality of data buffers for temporarily storing and forwarding data in said data network, each of data buffers providing an empty signal for indicating no data in said respective data buffer,

a synchronization network for connection to said respective first processors and said respective second processors for providing the synchronous transmission and reception of data between said first and second processor groups, including a plurality of transmit completion detection means for forwarding transmit ending signals, with the number of said plurality of transmit completion detection means corresponding to the number of said plurality of data buffers,

at least one of said transmit completion detection means coupled to at least one processor in said first processor group for receiving a transmit completion signal and to a data buffer for receiving an empty signal, for generating a transmit ending signal when said empty signal of said data buffer and each said transmit completion signal forwarded from said at least one processor in said first processor group are all true, and

at least another one of said transmit completion detection means coupled to said at least one of said transmit completion detection means for receiving at least said transmit ending signal, to another data buffer for receiving an empty signal and to at least one processor in said second processor group, said at least another one of said transmit completion detection means for generating a further transmit ending signal when said empty signal of said another data buffer and each transmit ending signal forwarded from said at least one of said transmit completion detection means are all true, and forwarding said further transmit ending signal to said at least one processor in said second processor group wherein,

said first processors output transmit completion signals to said synchronization network, and

said second processors input transmit ending detection signals as transmit completion signals.

5,701,510

METHOD AND SYSTEM FOR EFFICIENT DESIGNATION AND RETRIEVAL OF PARTICULAR SEGMENTS WITHIN A MULTIMEDIA PRESENTATION UTILIZING A DATA PROCESSING SYSTEM

William J. Johnson, Flower Mound; Robert Scott Keller, Grapevine; George C. Manthuruthil, Coppell, and Marvin L. Williams, Lewisville, all of Tex., assignors to International Business Machines Corporation, Armonk, N.Y.

Filed Nov. 14, 1991, Ser. No. 791,838

Int. Cl.^{6} G06T *1/00*

U.S. Cl. 395—806 **17 Claims**

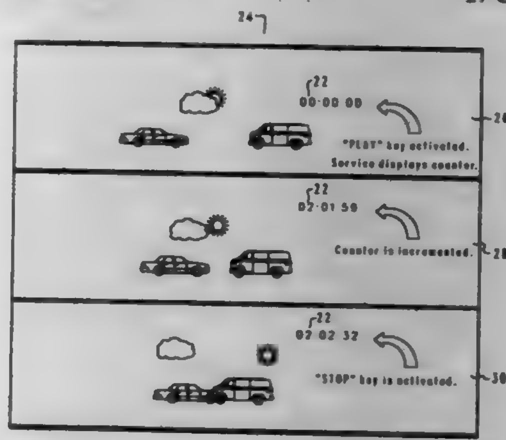

1. A method in a computer system for efficiently designating and retrieving a plurality of particular segments of a multimedia presentation, wherein said multimedia presentation is controlled by said computer system by means of operation of a plurality of user interface commands, each of said plurality of user interface commands having a selected presentation function associated therewith, said method comprising the steps of:

establishing a digital counter within said computer system;

determining a rate of change of said digital counter associated with operation of each of said plurality of user interface commands; and,

accessing individual ones of said plurality of particular segments of said multimedia presentation in a random order utilizing said digital counter, said determined rate of change of said digital counter and said plurality of user interface commands.

5,701,511

REDBOOK AUDIO SEQUENCING

Matthew W. Smith, Tulsa, Okla., assignor to Microsoft Corporation, Redmond, Wash.

Filed Aug. 2, 1995, Ser. No. 510,260

Int. Cl.^{6} G06F *13/10*

U.S. Cl. 395—806 **35 Claims**

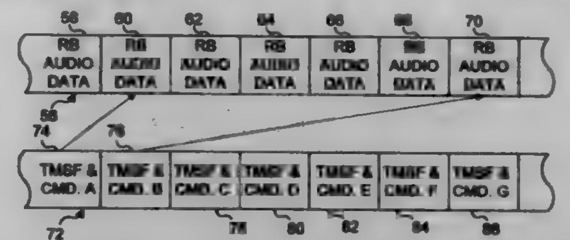

1. A method for storing a first data stream and a second data stream for synchronized playback from a storage medium, comprising the steps of:

(a) storing the first stream of data on the storage medium;

(b) storing the second stream of data on the storage medium, separate from the first stream of data, said second stream of data comprising timing data that specify a plurality of temporal pairs, each temporal pair comprising a command and a position in the first stream of data that is associated with the command; and

(c) using the temporal pairs to sequence the first stream of data with the second stream of data, so that the first and the second streams of data are synchronized.

5,701,512

DATA TRANSMISSION CONTROL APPARATUS FOR SYSTEM WITH INPUT/OUTPUT UNITS USED IN COMMON BY SEVERAL CPU'S

Yasuhisa Ishizawa, Yokohama, Japan, assignor to Canon Kabushiki Kaisha, Tokyo, Japan

Continuation of Ser. No. 972,738, Nov. 6, 1992, abandoned, which is a continuation of Ser. No. 524,711, May 21, 1990, abandoned, which is a continuation of Ser. No. 22,016, Mar. 5, 1987, abandoned. This application Sep. 15, 1994, Ser. No. 306,734

Claims priority, application Japan, Mar. 11, 1986, 61-051568; Mar. 11, 1986, 61-051569; Mar. 11, 1986, 61-051570

Int. Cl.^{6} G06F *13/12*

U.S. Cl. 395—821 **12 Claims**

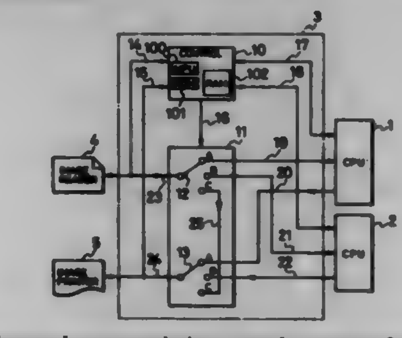

1. An image data transmission control apparatus for controlling a data transmission among a plurality of data processing apparatuses, a reader which reads an image to supply image data to the data processing apparatuses and a printer which prints an image in accordance with image data from the data processing apparatuses, comprising:

switch means for connecting any one of the data processing apparatuses to the reader or the printer, so as to transmit image data between a connected data processing apparatus and the reader or the printer and for connecting the reader to the printer, so as to print an image by the printer in accordance with image data from the reader; and

control means for controlling said switch means in response to an open command for requesting use of the reader or the printer and a close command for declaring end of use of the reader or the printer, which commands are sent from the data processing apparatuses, so that said switch means connects the reader and the printer during a stand-by period, and connects a one of the data processing apparatuses to the reader or the printer when the open command is sent from the one of the data processing apparatuses, and disconnects the one of the data processing apparatuses from the reader or the printer and connects the reader to the printer when the close command is sent from the one of the data processing apparatuses;

wherein, after the one of the data processing apparatuses is connected to the reader or the printer, said control means inhibits a changeover of the connection made by said switch means to another data processing apparatus until the close command is sent from the one of the data processing apparatuses, even if another open command is sent from the another data processing apparatus,

wherein said control means inhibits a changeover of the connection made by said switch means to any of the data processing apparatuses while the printer is printing an image in accordance with image data from the reader, even if the open command is sent from any of the data processing apparatuses, and

wherein said control means includes sending means for sending information representing unavailable-to-receive to one of the data processing apparatus, and said sending means sends the information representing the unavailable-to-receive to the data processing apparatus which has sent the open command during a time said control means inhibits a changeover of the connection made by said switch means.

5,701,513

SYSTEM FOR INDEPENDENTLY TRANSFERRING DATA BETWEEN A PLURALITY OF DISK DRIVES AND PLURALITY OF HOSTS IN THE ORDER OF DRIVES COMPLETING DISK PREPARATION OPERATIONS

Hiroyuki Kanekō, Tokyo, Japan, assignor to Kabushiki Kaisha Toshiba, Kawasaki, Japan

Continuation of Ser. No. 815,049, Dec. 31, 1991, abandoned. This application Nov. 29, 1993, Ser. No. 158,355

Claims priority, application Japan, Jan. 8, 1991, 3-0575

Int. Cl.^{6} G06F *7/00;13/14*

U.S. Cl. 395—826 **6 Claims**

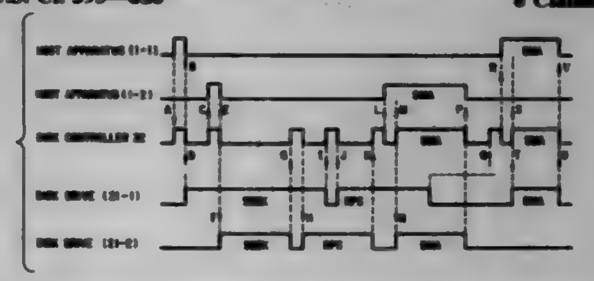

1. A disk control apparatus which is connected to a plurality of host apparatuses and which is connected to a plurality of disk drives through bus means, said disk control apparatus controlling data transfer between said host apparatuses and said disk drives, and performing data transfer not in an order of reception of data transfer activation commands but in accordance with an order of a completion signal from a disk drive which has completed a predetermined preparing operation, comprising:

a plurality of ports, each connected to a corresponding host apparatus;

receiving means for receiving a data transfer activation command supplied from one of said host apparatuses to one of said plurality of ports regardless of whether a data transfer activation command which is supplied from another host apparatus to another port is currently being executed;

preparing operation activation means for activating, in accordance with the data transfer activation command received by said receiving means, the predetermined data transfer preparing operation including a seek operation of moving a head of a disk drive to a target track of a disk of the disk drive and a rotational position sensing operation of sensing a target sector of the target track of the disk of the disk drive for a corresponding disk drive; and

data transfer activating means, in response to the completion signal from the disk drive which has completed the predetermined preparing operation, for starting the data transfer between the disk drive which has completed the preparing operation and a corresponding one of the host apparatuses through said bus means, the completion signal indicating a termination of both the seek operation and the rotational position sensing operation.

5,701,514

SYSTEM PROVIDING USER DEFINABLE SELECTION OF DIFFERENT DATA TRANSMISSION MODES OF DRIVERS OF AN I/O CONTROLLER TRANSMITTING TO PERIPHERALS WITH DIFFERENT DATA TRANSMISSION RATE

Don Steven Keener, and Gregory James Moore, both of Boca Raton, Fla., assignors to International Business Machines Corporation, Armonk, N.Y.

Filed Apr. 1, 1994, Ser. No. 221,952
Int. Cl.⁶ G06F *13/00;13/14*
U.S. Cl. 395—834 **17 Claims**

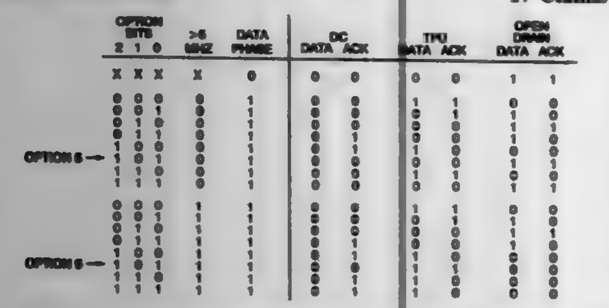

16. A multi-mode SCSI controller apparatus for sending data or non-data transmission in one of a plurality of selectable transmission modes including at least SCSI 1 and SCSI 2 modes, the transmissions being sent over a SCSI bus from the controller apparatus to peripheral devices attached to the bus, said SCSI controller apparatus comprising:

phase determining means for determining whether the controller is currently transmitting in a data or a non-data phase;

rate determining means for determining the data rate at which the controller is currently transmitting;

option defining means for providing user-defined parameters to the controller;

decoding means responsive to the data rate determined by said rate determining means, the phase determined by said phase determining means, and the user-defined parameters provided by said option defining means, for selecting the SCSI 1 or the SCSI 2 mode as the transmission mode; and

driving means responsive to said decoding means for transmitting the determined data or non-data over the SCSI bus in the selected SCSI 1 or SCSI 2 mode.

5,701,515

INTERFACE FOR SWITCHING PLURALITY OF PIN CONTACTS TO TRANSMIT DATA LINE AND PLURALITY OF PIN CONTACTS TO RECEIVE DATA LINE TO INTERFACE WITH SERIAL CONTROLLER

Eric J. Gradeler, Los Altos Hills, Calif., assignor to Apple Computer, Inc., Cupertino, Calif.

Filed Jun. 16, 1994, Ser. No. 260,716
Int. Cl.⁶ G06F *3/00*
U.S. Cl. 395—834 **3 Claims**

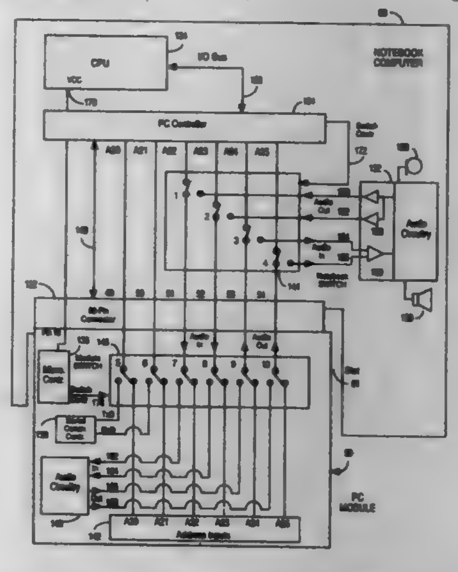

1. An analog interface between a PC card and an electronic device, said PC card and said electronic device communicating through a PC card digital interface including a plurality of pin contact points between said PC card and said electronic device, said analog interface comprising:

a first audio circuit in said PC card;

a first audio-in line and a first audio-out line connected to said first audio circuit in said PC card;

first detecting means for detecting that said PC card is inserted into said electronic device;

first switching means responsive to said first detecting means for switching said plurality of pin contact points of said PC cad digital interface to said first audio-in and audio-out lines in said PC card, thereby enabling analog communication between said electronic device and said PC card through said PC digital interface;

a second audio-circuit in said electronic device;

a second audio-in line and a second audio-out line connected to said second audio circuit in said electronic device;

second detecting means for detecting that said PC card is inserted into said electronic device;

second switching means responsive to said second detecting means for switching said plurality of pin contact points of said PC digital interface to said second audio-in and audio-out lines in said electronic device;

a serial communication controller for controlling digital communications through said analog interface; and

a transmit data line and a receive data line for interfacing with said serial communication controller, wherein said first switching means switches a first one of said plurality of pin contact points to said transmit data line and switches a second one of said plurality of pin contact points to said receive data line.

5,701,516

HIGH-PERFORMANCE NON-VOLATILE RAM PROTECTED WRITE CACHE ACCELERATOR SYSTEM EMPLOYING DMA AND DATA TRANSFERRING SCHEME

Yu-Ping Cheng, San Jose, and David Hitz, Sunnyvale, both of Calif., assignors to Auspex Systems, Inc., Santa Clara, Calif.

Continuation of Ser. No. 152,245, Nov. 12, 1993, abandoned, which is a continuation of Ser. No. 848,539, Mar. 9, 1992, abandoned. This application Jan. 19, 1996, Ser. No. 588,203
Int. Cl.⁶ G06F *13/28;12/08*
U.S. Cl. 395—842 **16 Claims**

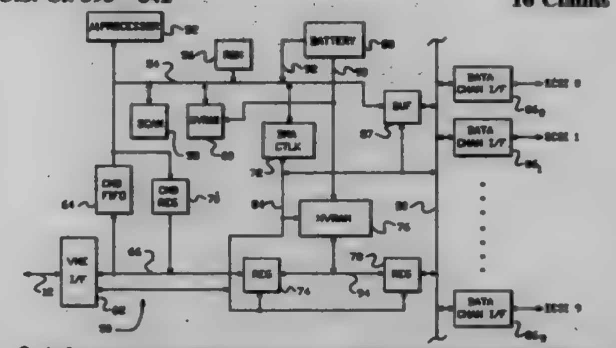

9. A data storage system that is coupleable between a plurality of non-volatile data storage devices and a host computer system to manage the exchange of data between said plurality of non-volatile data storage devices and said host computer system, said data storage system comprising:

a) a plurality of data transfer channels coupleable respectively to said data storage devices, each said data transfer channel including:

i) a channel buffer; and

ii) a channel controller that, with respect to said host computer system, autonomously controls the transfer of data between a respective pair of said channel buffers and said non-volatile data storage devices;

b) a non-volatile random access memory for storing control information and cache page data, said control information corresponding to said cache page data;

c) an interface for coupling said data storage system with said host computer system;

d) a data bus permitting selective transfer of said cache page data between said data transfer channels, said non-volatile random access memory, and said interface; and

e) a controller, coupled to said data bus, that directs the selective transfer of said cache page data through said interface, said non-volatile random access memory, and said data transfer channels, said controller including a direct memory access controller that manages burst transfers of predetermined cache page data between said non-volatile random access memory and said channel buffers, said controller maintaining said predetermined cache page data and corresponding said control information until the transfer of said predetermined cache page data to said non-volatile data storage devices until the transfer is complete.

5,701,517

PIPELINED ALIGNMENT SHIFTER AND METHOD FOR UNIVERSAL BIT FIELD BOUNDARY ALIGNMENT

Peter R. Carpenter, Watsonville, Calif., assignor to Cirrus Logic, Inc., Fremont, Calif.

Continuation of Ser. No. 362,296, Dec. 22, 1994, abandoned. This application Jul. 26, 1996, Ser. No. 686,479
Int. Cl.⁶ G06F *13/00;13/38;5/00*
U.S. Cl. 395—886 **29 Claims**

1. A peripheral controller for transferring a string of data between source and destination memory locations organized as N fields of B bits, where N and B are positive integers and N is greater than one, comprising:

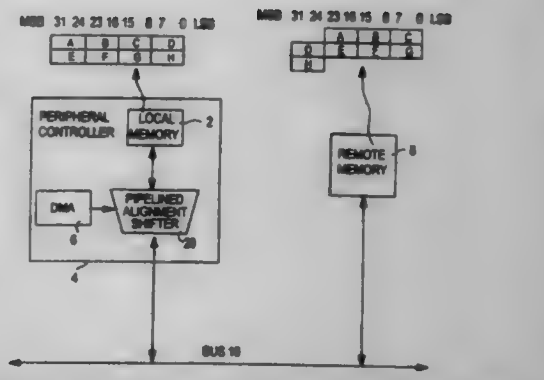

storing means for storing at least one selected output from a source memory location;

receiving means receiving outputs of said source memory location and the at least one selected output from said storing means;

outputting means coupled to said receiving means for selectively outputting said outputs of said source memory location and said storing means as said N fields of B bits to a destination memory location in response to a plurality of selector signals indicative of offset differences between said source and destination memory locations such that all possible combinations of offset difference are compensated during transfer of said string of data; and

a plurality of counters coupled to said outputting means for monitoring a first number of fields of B bits outputted from said source memory location and a second number of fields of B bits inputted into said destination memory location.

5,701,518

WATERPROOF CAMERA

Tsutomu Honda; Hisanori Itoh, both of Sakai; Takuya Ueno, Hashimoto; Junji Mori, Sakai; Hiroyuki Matsumoto, Wakayama; Yasushi Hasegawa, Sakai, and Hideo Kajita, Chihayaakasaka-Mura, all of Japan, assignors to Minolta Co., Ltd., Osaka, Japan

Filed Feb. 7, 1996, Ser. No. 598,023
Claims priority, application Japan, Feb. 10, 1995, 7-046554
Int. Cl.⁶ G03B *17/08;17/00*
U.S. Cl. 396—29 **23 Claims**

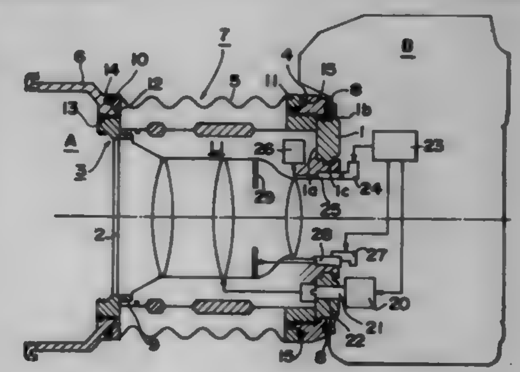

1. A waterproof camera to which an interchangeable lens unit having a waterproof construction is mounted, said waterproof camera comprising:

a lens mount provided in a camera body and to which the interchangeable lens unit is removably mounted, said lens mount including

a ring-shaped flange which positions the interchangeable lens unit relative to the camera body, and

an engaging member provided at an outer circumference of the ring-shaped flange and which engages with one end of the interchangeable lens unit, so that the interchangeable lens unit is connected to the camera body; and

a waterproof member which is in pressing contact between said engaging member and said one end of the interchangeable lens unit at an area of engagement between them, and prevents water from penetrating in said area of engagement.

5,701,519
CONTROL DEVICE FOR PREVENTING RED-EYE EFFECT ON CAMERA
Toru Fukuhara, Isehara; Toshio Sosa, Narashino; Toshio Dobashi, Yokohama; Nobuaki Sasagaki, and Masaharu Hara, both of Kawasaki, all of Japan, assignors to Nikon Corporation, Tokyo, Japan
Division of Ser. No. 71,613, Jun. 4, 1993, which is a continuation of Ser. No. 974,512, Nov. 12, 1992, abandoned, which is a division of Ser. No. 930,466, Aug. 20, 1992, abandoned, which is a continuation of Ser. No. 785,210, Oct. 25, 1991, abandoned, which is a continuation of Ser. No. 632,648, Dec. 26, 1990, abandoned, which is a continuation of Ser. No. 445,996, Dec. 4, 1989, abandoned, which is a continuation-in-part of Ser. No. 323,386, Mar. 14, 1989, abandoned. This application Jun. 7, 1995, Ser. No. 483,843
Claims priority, application Japan, Mar. 16, 1988, 63-64031
Int. Cl.⁶ G03B *15/05*
U.S. Cl. 396—48 **11 Claims**

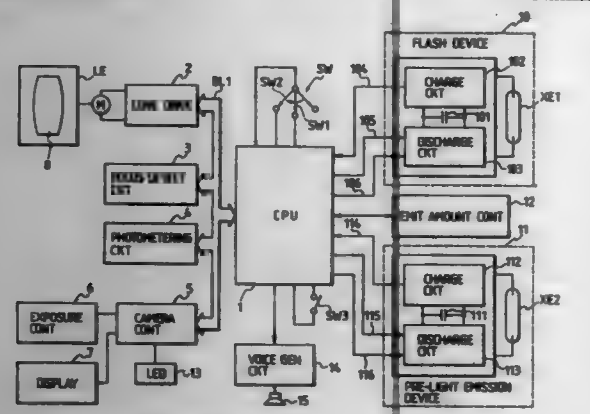

1. A camera comprising:
a red-eye effect reducing illumination device which makes a pre-emission operation prior to a main emission operation;
a mode setting device which can selectively set a main emission mode in which only a main emission operation is effected, or a red-eye reducing mode in which a pre-emission operation is effected and then a main emission operation is effected;
a counter which starts to count in response to a pre-emission operation; and
a control device electrically connected to said illumination device, which controls operation of said illumination device and other operations in said camera, said control device inhibiting the other operations in said camera before said counter counts a predetermined time when said red-eye reducing mode is set by said mode setting device.

5,701,520
CAMERA
Minoru Ishiguro; Jun'ichi Iwamoto, and Muneyoshi Sato, all of Saitama-ken, Japan, assignors to Fuji Photo Optical Co., Ltd., Saitama-ken, Japan
Filed Sep. 29, 1995, Ser. No. 536,943
Claims priority, application Japan, Oct. 13, 1994, 6-247866; Oct. 13, 1994, 6-247877
Int. Cl.⁶ G03B *17/00;17/18*
U.S. Cl. 396—48 **15 Claims**

1. A camera comprising:
(a) a mode setting portion in which either mode is set out of a first focusing mode and a second focusing mode;

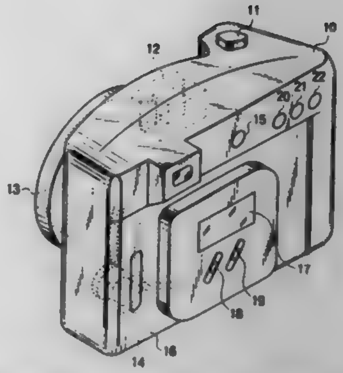

(b) a mode switch capable of being switched between an off state and an on state, said mode switch alternately switching a mode set in said mode setting portion between said first focusing mode and said second focusing mode every activation of the on state;
(c) detecting means for detecting a period in which said mode switch is kept in the on state;
(d) focusing means for performing focusing according to the mode set in said mode setting portion in synchronization with a shutter release button; and
(e) focusing mode controlling means for performing such a control, after completion of the focusing by said focusing means,
that when the period detected by said detecting means is longer than a predetermined period and when the mode set in said mode setting portion is said second focusing mode, the mode set in said mode setting portion is held in said second focusing mode,
that when the period detected by said detecting means is shorter than the predetermined period and when the mode set in said mode setting portion is said second focusing mode, the mode set in said mode setting portion is switched from said second focusing mode to said first focusing mode, and
that when the mode set in said mode setting portion is said first focusing mode, the mode set in said mode setting portion is held in said first focusing mode.

5,701,521
PHOTOGRAPHIC DEVICE HAVING A VIBRATION COMPENSATION FUNCTION WITH REDUCED POWER CONSUMPTION
Sueyuki Ohishi, and Toshiyuki Nakamura, both of Tokyo, Japan, assignors to Nikon Corporation, Tokyo, Japan
Filed Jan. 25, 1995, Ser. No. 377,263
Claims priority, application Japan, Apr. 22, 1994, 6-084639
Int. Cl.⁶ G03B *17/00*
U.S. Cl. 396—52 **11 Claims**

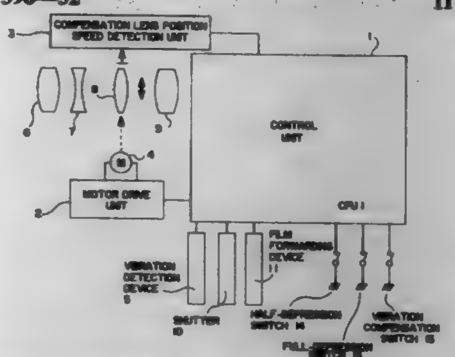

1. A photographic device, comprising:
a vibration compensation system to compensate for vibration of an image on an image forming plane caused by vibration of the photographic device;
a control unit to control photographic operations and to control the vibration compensation system; and

a mode changeover device to change a mode of operation of the control unit to a low current consumption mode when a photographic operation has ended, and to change the control unit from the low current consumption mode to the normal operation mode when photographic preparation operations commence,
wherein the normal operation mode comprises a low-speed processing mode, a medium-speed processing mode and a high-speed processing mode, and wherein the mode changeover device changes the processing mode of the control unit according to whether vibration compensation is performed.

5,701,522
CAMERA SHAKE AMPLITUDE DETECTING DEVICE
Nobuhiko Terui, Ichikawa, Japan, assignor to Nikon Corporation, Tokyo, Japan
Continuation of Ser. No. 687,232, Jul. 25, 1996, abandoned, which is a continuation of Ser. No. 478,362, Jun. 7, 1995, abandoned, which is a continuation of Ser. No. 376,432, Jan. 23, 1995, abandoned, which is a continuation of Ser. No. 137,963, Oct. 19, 1993, abandoned, which is a continuation-in-part of Ser. No. 131,939, Oct. 5, 1993, abandoned, which is a continuation of Ser. No. 32,250, Mar. 17, 1993, abandoned, which is a division of Ser. No. 835,576, Feb. 14, 1992, abandoned. This application Mar. 3, 1997, Ser. No. 810,286
Claims priority, application Japan, Mar. 6, 1991, 3-039869; Jul. 2, 1993, 5-190876
Int. Cl.⁶ G03B *5/00*
U.S. Cl. 396—53 **3 Claims**

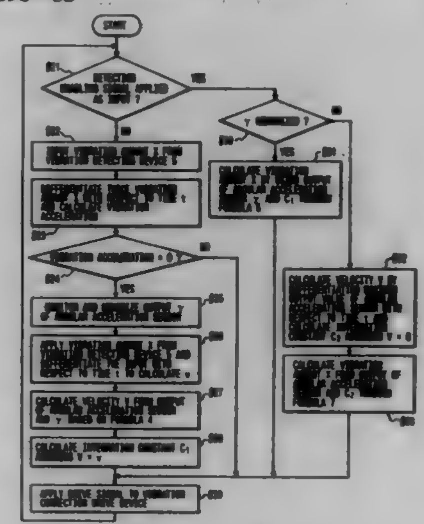

1. A camera shake amplitude detecting device comprising:
mechanical detection means for detecting a shake acceleration when a camera body is shaken; and
mechanical shake calculation means for calculating a shake amplitude of the camera body based on the detection output of said mechanical detection means;
said mechanical shake calculation means including:
discrimination means for discriminating a time point of change from one to the other of a positive acceleration and a negative acceleration, based on the detection output of said mechanical detection means;
velocity calculation means for calculating a velocity by integrating by time the acceleration detected by said mechanical detection means; and
integration constant calculation means for calculating an integration constant to be used by said velocity calculation means, with the velocity at the time of discrimination by said discrimination means being set as a predetermined value.

5,701,523
LENS BARREL
Akio Omiya, and Takashi Kamoda, both of Saitama-ken, Japan, assignors to Fuji Photo Optical Co., Ltd., Saitama-ken, Japan
Filed Jan. 9, 1997, Ser. No. 780,274
Claims priority, application Japan, Jan. 10, 1996, 8-002180
Int. Cl.⁶ G03B *5/00;* **G02B** *7/04*
U.S. Cl. 396—83 **6 Claims**

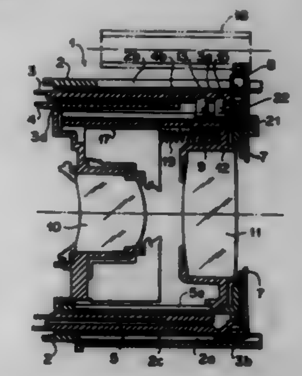

1. A lens barrel for a zoom lens having first and second lens units disposed along an optical axis one behind the other in the direction of the optical axis, comprising
a rotary barrel which is rotatable about the optical axis and moves the first lens unit in the direction of the optical axis in response to its rotation,
a first guide means which is provided on the rotary barrel and guides the second lens unit to focus the zoom lens in response to rotation of the rotary barrel, and
a second guide means which is provided on the rotary barrel in parallel to the first guide means and guides the second lens unit to zoom the zoom lens in response to rotation of the rotary barrel.

5,701,524
FOCUS DETECTION DEVICE AND FOCUS DETECTION METHOD
Yosuke Kusaka, Yokohama; Shigeyuki Uchiyama, Setagaya-ku; Shozo Yamano, Sinagawa-ku, and Tsutomu Narisawa, Kitaadachi-gun, all of Japan, assignors to Nikon Corporation, Tokyo, Japan
Continuation-in-part of Ser. No. 323,720, Oct. 18, 1994, abandoned. This application Nov. 28, 1995, Ser. No. 563,483
Claims priority, application Japan, Oct. 29, 1993, 5-272626
Int. Cl.⁶ G03B *3/00;13/18*
U.S. Cl. 396—123 **11 Claims**

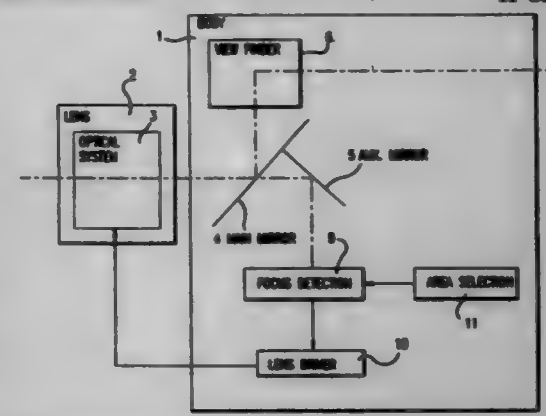

1. A focus detection device including a plurality of focus detection areas on a photography screen of a photography optical system, the device comprising:
a plurality of charge accumulation type photoelectric converters that are provided in correspondence to said plurality of focus

detection areas, said photoelectric converters outputting pairs of image signals corresponding to a light intensity distribution of a subject image formed by the optical system;

focus detection computation means for computing a focus adjustment condition of the photography optical system based on the pairs of image signals output from the photoelectric converters;

accumulation control means for controlling charge accumulation of the photoelectric converters based on at least one image signal from the pair of image signals output from the photoelectric converters;

area selection means for selecting a priority focus detection area from among the plurality of focus detection areas resulting in a priority focus detection area and non-selected focus detection areas; and

sequence control means for controlling the accumulation control means to repeatedly perform charge accumulation in the photoelectric converters and for controlling the photoelectric converters for parallel focus detection in the priority focus detection area and the non-selected focus detection areas, wherein focus detection operations in the photoelectric converters corresponding to the selected priority focus detection area are given priority over the photoelectric converters corresponding to the non-selected focus detection areas.

5,701,525
CAMERA ENCODER ASSEMBLY, SYSTEM AND METHOD THEREOF
Garret J. Caterino, Maynard; Patrick W. Hopkins, Chelmsford, and Elliott S. Strizhak, Millis, all of Mass., assignors to Polaroid Corporation, Cambridge, Mass.
Continuation-in-part of Ser. No. *576,777*, Dec. 21, 1995. This application Dec. 3, 1996, Ser. No. 758,338
Int. Cl.⁶ G03B *9/08;13/34;* **G01D** *5/36*
U.S. Cl. 396—132 **16 Claims**

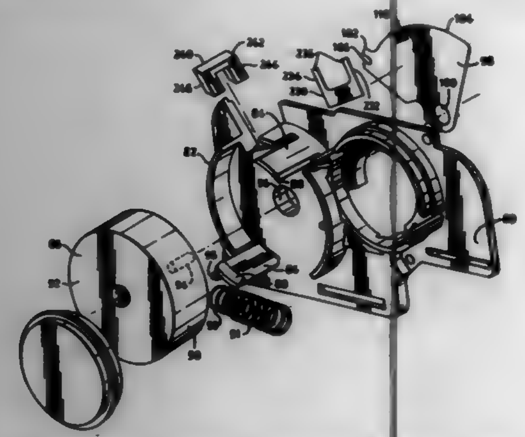

1. An encoder assembly comprising: encoding mask means coupled to one of a pair of relatively movable members for providing alternating light blocking and unblocking portions; encoding sheet means coupled to a second one of the pair of relatively movable members for providing alternating light blocking and unblocking portions; means for urging said light blocking and unblocking means of said encoding mask and sheet means together into intimate abutting relationship with one another such scattering of light therebetween during relative movement of said movable members is significantly minimized or eliminated.

5,701,526
PHOTOMETRY APPARATUS
Hiroyuki Iwasaki, Yokohama, Japan, assignor to Nikon Corporation, Tokyo, Japan
Filed Dec. 9, 1996, Ser. No. 762,062
Claims priority, application Japan, Dec. 13, 1995, 7-324133
Int. Cl.⁶ G03B *7/08*
U.S. Cl. 396—234 **20 Claims**

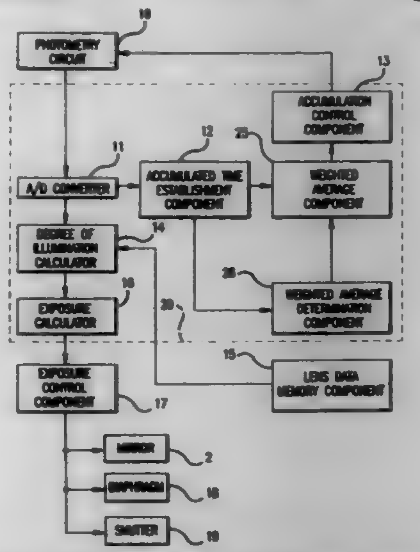

1. A photometry apparatus adapted to perform an accumulation operation of an accumulation type photometry element, said apparatus comprising:

a photometry component that performs photometry of an object field and outputs photometry data;

an accumulated time establishment component that calculates a new accumulated time of the photometry element using the output data of the photometry component and previously accumulated time;

a weighted average determination component that outputs a weight to be given the new accumulated time, which is received from the accumulated time establishment component, to a weighted average component, wherein the weighted average component calculates, using the weight received from the weighted average determination component, a weighted average of the previously accumulated time and the output of the accumulated time establishment component;

and an accumulation control component that controls the accumulation operation of the photometry apparatus on the basis of the output of the weighted average component.

5,701,527
CAMERA CAPABLE OF MEASURING POWER SOURCE VOLTAGE
Namiko Sakabe, Musashino; Toshiaki Ishimaru, Hino; Yoshiaki Kobayashi, Hachioji, and Takashi Suzuki, Hino, all of Japan, assignors to Olympus Optical Co., Ltd., Tokyo, Japan
Filed Dec. 21, 1994, Ser. No. 360,406
Claims priority, application Japan, Dec. 27, 1993, 5-348806; Dec. 6, 1994, 6-302446
Int. Cl.⁶ G03B *7/26*
U.S. Cl. 396—277 **14 Claims**

1. A battery check device for a camera, comprising:

a discharging circuit to which current flows from a battery;

discharging time setting means for setting a discharging time for determining that an internal resistance of the battery has increased due to non-use of the battery so as to temporarily reduce an output voltage of the battery, said discharging time being longer than a time required to check a residual energy amount of the battery;

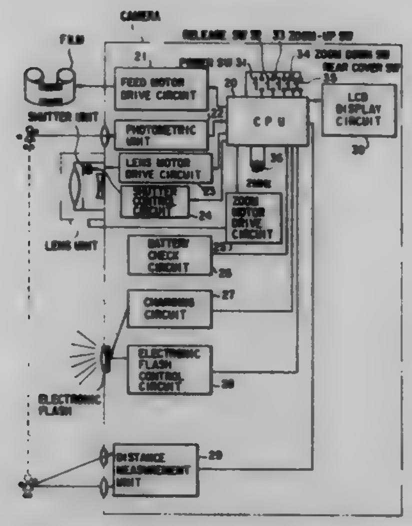

determining means for determining whether a voltage of said discharging circuit has reached a reference voltage specific to the battery within said discharging time; and

mode state determining means for determining whether an operating mode of a camera remains in a normal mode in which the camera performs a normal photographic sequence or whether the operating mode of the camera has been changed to the normal mode from a power-saving mode in which the camera consumes less power than in the normal mode;

wherein said discharging time setting means includes:

(i) means for setting a discharging time corresponding to the time required to check the residual energy amount of the battery when said mode state determining means determines that the operating mode of the camera remains in the normal mode; and

(ii) means for setting said discharging time for determining that the internal resistance of the battery has increased due to non-use of the battery when said mode state determining means determines that the mode of the camera has been changed to the normal mode from the power-saving mode; and

wherein the residual energy amount of the battery is determined to be insufficient when said determining means determines that the voltage of said discharging circuit has not reached the reference voltage specific to the battery within said discharging time.

5,701,528
APERTURE STOP FOR A PHOTOMETRY UNIT OF A CAMERA
Hiroshi Wakabayashi, Yokohama, and Kiyosada Machida, Saitama-ken, both of Japan, assignors to Nikon Corporation, Toyko, Japan
Continuation of Ser. No. 383,100, Feb. 3, 1995, abandoned. This application Feb. 18, 1997, Ser. No. 801,528
Claims priority, application Japan, Feb. 4, 1994, 6-012736
Int. Cl.⁶ G03B *7/08*
U.S. Cl. 396—268 **16 Claims**

1. A camera, comprising:

a camera housing;

a photometry unit which conducts photometry on a subject region and which is provided in the camera housing;

an aperture stop which is integrally formed with the camera housing in an area positioned to the front of the photometry unit and which acts as a stop by restricting the amount of incidental light on the photometry unit by an opening at the outer surface of the housing; and

an optically transparent body that is either transparent or half-transparent mounted in the aperture stop from the inner surface of the housing, the optically transparent body passing the incidental light from within a predetermined photometry

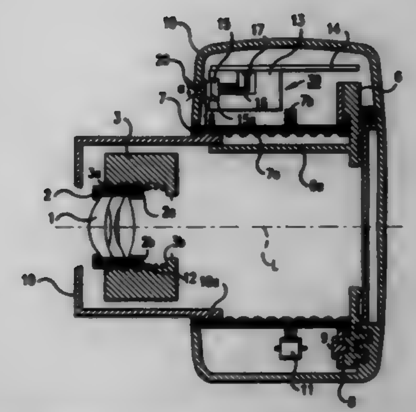

angle therethrough without altering the light path, wherein the photometry unit and the optically transparent body are arranged so that light from the subject region passes, without restriction, from the optically transparent body to the photometry unit.

5,701,529
INFORMATION RECORDING APPARATUS
Norikazu Yokonuma, Yokohama; Kazuyuki Kazami, Tokyo; Youichi Yamazaki, and Hideo Hibino, both of Kawasaki, all of Japan, assignors to Nikon Corporation, Tokyo, Japan
Continuation of Ser. No. 204,511, Mar. 2, 1994, abandoned. This application Sep. 12, 1996, Ser. No. 715,360
Claims priority, application Japan, Mar. 3, 1993, 5-042798; Mar. 11, 1993, 5-051056; Mar. 17, 1993, 5-057404; Mar. 17, 1993, 5-057405
Int. Cl.⁶ G03B *17/24*
U.S. Cl. 396—310 **15 Claims**

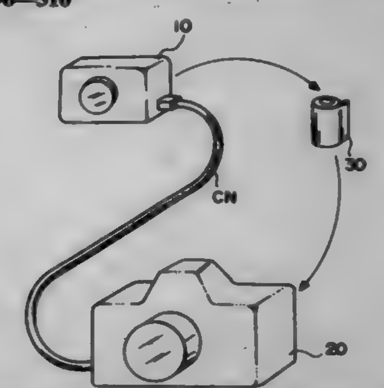

1. An information recording apparatus adapted for use with a camera having a storage unit in which photographic information related to a photographic image for each frame of film has been stored, the storage unit being fixedly connected inside the camera, comprising:

a feeding unit for receiving the film on which the photographic image has been already recorded for each frame and for feeding the film within said information recording apparatus;

reading means;

a connector for connecting the camera and said reading means so that, when said information recording apparatus is activated, the reading means reads the photographic information from the storage unit;

a recording unit which records the photographic information on a recording region provided on the film for each frame;

information discriminating means for discriminating whether the photographic information read from the storage unit relates to information about the frame of the film loaded in said information recording apparatus; and

recording control means for, when said information discriminating means discriminates that the read photographic information relates to information about the frame of the film, con-

trolling said feeding unit so as to feed the film and controlling said recording unit so as to, in synchronization with feeding of the film, record the photographic information about each frame read by said reading means on the corresponding recording region of each frame of the film.

5,701,530
INFORMATION RECORDING SYSTEM
Takeshi Fujino, Yokohama, Japan, assignor to Nikon Corporation, Tokyo, Japan
Continuation of Ser. No. 335,972, Nov. 3, 1994, abandoned, which is a continuation of Ser. No. 173,944, Dec. 27, 1993, abandoned, which is a continuation of Ser. No. 17,342, Feb. 3, 1993, abandoned, which is a continuation of Ser. No. 773,790, Oct. 11, 1991, abandoned, which is a continuation of Ser. No. 485,761, Feb. 26, 1990, abandoned, which is a continuation of Ser. No. 343,332, Apr. 26, 1989, abandoned. This application Jun. 1, 1995, Ser. No. 457,746
Claims priority, application Japan, May 2, 1988, 63-107634; May 2, 1988, 63-107635; May 6, 1988, 63-109159
Int. Cl.⁶ G03B *17/24*
U.S. Cl. 396—311 **42 Claims**

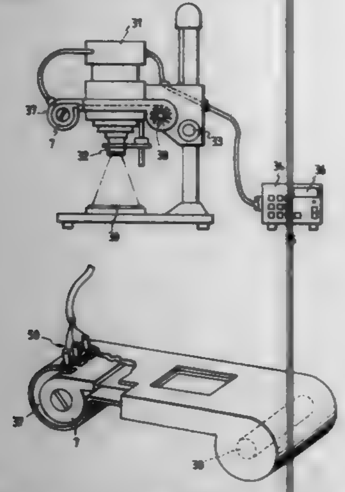

42. An information processing system comprising:
a) an information processing apparatus including
a loading part in which a film cartridge is loaded, said film cartridge including a film and a memory,
an exposure part which exposes said film to light,
a processing part which processes exposure data relating to the exposure of said film, and a storing part to store said exposure data in said memory whenever one frame of said film is exposed; and
b) a recording apparatus including
a producing part which produces data independently of said information processing apparatus and transfers the produced data to said memory.

5,701,531
FILM FEEDING DEVICE
Yoshiharu Tanaka, Sakai; Junichi Tanii, Izumi, and Katsuhiro Ono, Sakai, all of Japan, assignors to Minolta Co., Ltd., Osaka, Japan
Filed Jan. 25, 1996, Ser. No. 591,707
Claims priority, application Japan, Jan. 26, 1995, 7-010487
Int. Cl.⁶ G03B *17/24;17/02;1/00*
U.S. Cl. 396—319 **20 Claims**

1. A film feeding device for feeding a film, on which photographing information is to be recorded, from a film cartridge, containing the film, along a film feed path to a take-up spool, said device comprising:
said take-up spool;

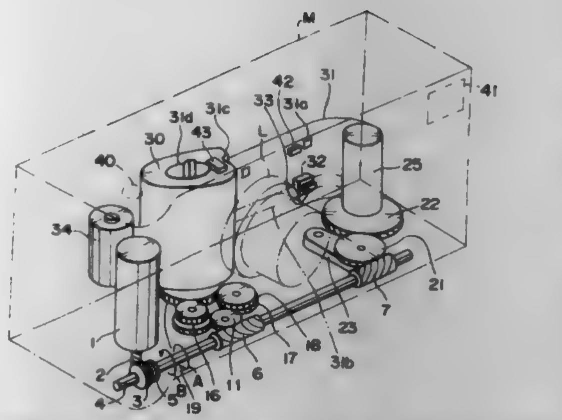

a body for supporting said take-up spool, said body being adapted to receive the film cartridge;
a member having an exposure opening, said member being supported in said body so that said exposure opening defines an image exposure area on the film when the film is positioned in the film feed path, said exposure opening having an upstream side and a downstream side with reference to movement of the film along the film feed path from a thus received film cartridge to said take-up spool;
an information communicating device which is subject to influence of spurious electro-magnetic noise, which writes or reads the photographing information with respect to the film positioned in the film feed path, and which is positioned adjacent said downstream side of the exposure opening;
a drive motor which is supported in said body at a position such that a thus received film cartridge would be positioned between the drive motor and said upstream side of the exposure opening so that said information communicating device is separated from said motor by an interval generally corresponding to said exposure opening and the thus received film cartridge; and
a film feeding mechanism, for feeding the film across the exposure opening along the film feeding path, said film feeding mechanism being driven by a drive power of the drive motor.

5,701,532
LENS ADJUSTMENT DEVICE OF STEREO CAMERA
Minoru Inaba, No. 1116, Oaza Samukawa, Oyama-Shi, Tochigi-ken, Japan
Filed Jan. 23, 1997, Ser. No. 787,900
Int. Cl.⁶ G03B *35/10*
U.S. Cl. 396—326 **4 Claims**

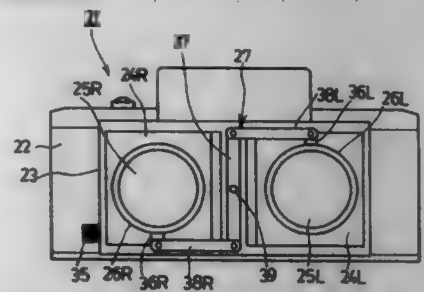

1. In an optical axis distance variable type stereo camera which includes two lens boards mounted on a frame in such a manner as to be slidable to the right and left, and which adjusts either manually or automatically the distance between the optical axes of lenses fitted to said lens boards by disposing a lens gap adjustment mechanism for moving symmetrically said two lens boards in a transverse direction, a lens adjustment device for said stereo camera characterized in that a lever is fitted turnably at a middle portion thereof to said frame; a crank arm is provided on an adjustment ring such as a stop disposed on one of right and left lens barrels in such a manner as to exist above a line connecting the center of rotation of said adjustment ring to the center of

rotation of said lever; another crank arm is provided on the other of said adjustment rings in such a manner as to exist below a line connecting the center or rotation of said adjustment ring to the center of rotation of said lever; and one of the ends of said lever is interconnected by a link to one of said crank arms while the other end of said lever is interconnected by another link to the other of said crank arms to thereby constitute a parallel crank mechanism so that the other of said adjustment ring rotates in the same direction and at the same angle in the interlocking arrangement with the rotation of one of said adjustment rings.

5,701,533
MOVEABLE LENS BARRIER FOR A CAMERA WHICH REDUCES CAMERA SIZE
Tatsuya Suzuki, Tokyo, and Hiroaki Miyazaki, Tsukui-gun, both of Japan, assignors to Olympus Optical Co., Ltd., Tokyo, Japan
Filed Feb. 6, 1996, Ser. No. 597,644
Claims priority, application Japan, Feb. 7, 1995, 7-019593
Int. Cl.⁶ G03B *17/04*
U.S. Cl. 396—349 **29 Claims**

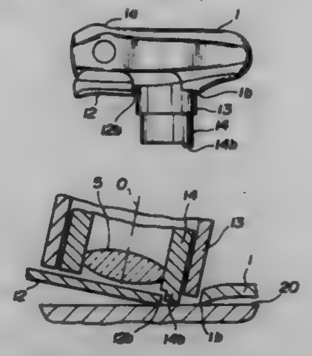

9. A camera comprising:
a lens mount having an imaging lens movable relative to a camera body between a projected position where photographing is performed and a collapsed position where no photographing is performed, and
a barrier disposed on the camera body and slidable in a direction approximately perpendicular to an optical axis of the lens mount between two extreme positions, namely, a closed position where the barrier covers a front of the imaging lens and partly covers a front of the lens mount and an open position where the barrier is clear of the front of the imaging lens and a front of the lens mount, whereby the barrier has a side which is adjacent to one side of the lens mount in the open position and which leaves a portion of the front of the lens mount on another side of the lens mount opposite said one side of the lens mount to be exposed when the barrier is at the closed position.

5,701,534
SEAL APPARATUS OF FINDER
Ichiro Taguchi, and Masahiro Inazuka, both of Tokyo, Japan, assignors to Asahi Kogaku Kogyo Kabushiki Kaisha, Tokyo, Japan
Filed Jan. 24, 1995, Ser. No. 377,332
Claims priority, application Japan, Jan. 25, 1994, 6-000192 U
Int. Cl.⁶ G03B *13/02;13/08*
U.S. Cl. 396—373 **9 Claims**

1. A seal apparatus for a finder, comprising:
a finder body which defines an optical path of said finder, said finder body having an entrance opening and an emission opening; and

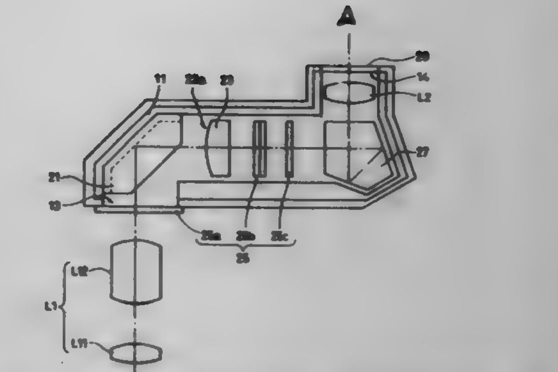

a liquid crystal display located along said optical path of said finder body, said liquid crystal display comprising a liquid crystal plate and at least one polarizing plate spaced from and out of contact with said liquid crystal plate;
said at least one polarizing plate spaced from and out of contact with said liquid crystal plate being secured to at least one of said entrance opening and said emission opening of said finder body to close said finder body.

5,701,535
CAMERA WITH MOVABLE OPTICAL ALBADA VIEWFINDER
Michael Reibl, Boblingen, Germany, assignor to Eastman Kodak Company, Rochester, N.Y.
Filed Jun. 21, 1996, Ser. No. 668,192
Claims priority, application Germany, Jun. 22, 1995, 295 10 157.1
Int. Cl.⁶ G07B *13/02;17/04*
U.S. Cl. 396—373 **17 Claims**

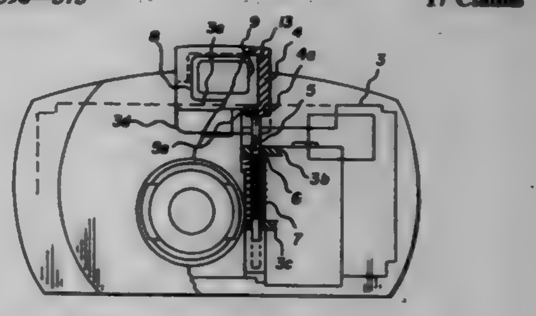

1. A photographic camera comprising:
a camera body; and
an inverse Galilean optical direct viewfinder that is extendible out of the camera body vertically to the optical axis of said camera to an extended position and is retractable back into a retracted position in said camera body, is characterized in that:
said direct viewfinder is a one-piece U-shaped component extending around said camera body and guided therein, having an integrated front lens and an integrated eyepiece lens, said direct viewfinder includes a second wall to lock said viewfinder in said retracted position, said wall being arranged adjacent to a film transport lever and provided with a recess for engaging a retaining nose integral with said transport lever, such that said direct viewfinder is lockable in said retracted position.

5,701,536
CAMERA WITH FILM METERING RESPONSIVE SHUTTER RELEASE
Edward Norman Balling, Rochester; David Clinton Smart, Fairport; Thomas Edgar Dussinger, Henrietta, and Dennis Roland Zander, Penfield, all of N.Y., assignors to Eastman Kodak Company, Rochester, N.Y.
Filed Dec. 22, 1995, Ser. No. 577,785
Int. Cl.⁶ G03B *1/04;17/04;17/42*
U.S. Cl. 396—396 **19 Claims**

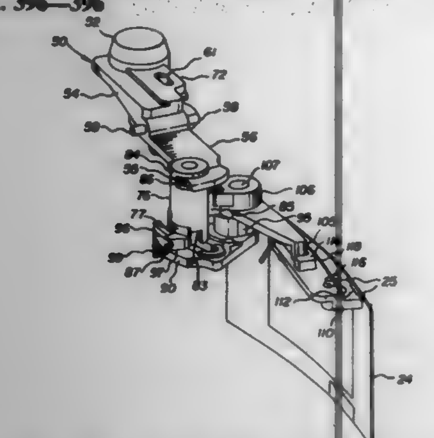

1. A camera, for use with a filmstrip, said camera comprising:
film metering means for metering the filmstrip in said camera, said film metering means including a metering pawl for engaging exposure-defining perforations of the filmstrip, said metering pawl being movable in engagement with the filmstrip to a film metered position;
a trigger having a fulcrum, a depressible shutter release button located on one side of said fulcrum, and a release element located on the other side of said fulcrum, said trigger being pivotable to make depression of said shutter release button raise said release element, said release element being coupled to said metering pawl to retain said shutter release button depressed and said release element in a raised position, until said metering pawl has been moved to said film metered position.

5,701,537
CAMERA SHUTTER
Kazuo Akimoto, and Seiichi Imano, both of Yotsukaido, Japan, assignors to Seiko Precision Inc., Japan
Filed Mar. 24, 1995, Ser. No. 410,056
Claims priority, application Japan, Mar. 24, 1994, 6-053785
Int. Cl.⁶ G03B *9/08*
U.S. Cl. 396—463 **9 Claims**

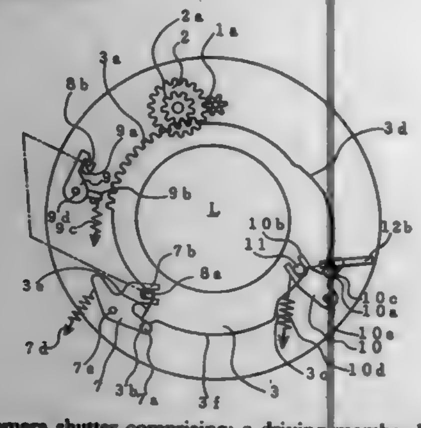

2. A camera shutter comprising: a driving member having first and second control portions; means for rotating the driving member in forward and reverse directions; switching means for switching an operating starting position of the driving member between first and second positions; an opening member controlled by the first control portion of the driving member; first biasing means for biasing the opening member in the direction of opening the shutter; first restraining means for restraining an operation of the opening member and resisting the bias of the first biasing means; a closing member controlled by the second control portion of the driving member; second biasing means for biasing the closing member in the direction of closing the shutter; and second restraining means for restraining an operation of the closing member and resisting the bias of the second biasing means; wherein when the driving member starts its operation from the first position, the opening member is restrained by the first control portion of the driving member, and when the driving member starts its operation from the second position, the opening member is restrained by the first restraining means.

5,701,538
PHOTOGRAPHIC FILM CASSETTE AND PRODUCTION METHOD THEREFOR
Mototada Yasui, Kanagawa, Japan, assignor to Fuji Photo Film Co., Ltd., Kanagawa, Japan
Filed Mar. 14, 1996, Ser. No. 615,833
Claims priority, application Japan, Mar. 16, 1995, 7-757483
Int. Cl.⁶ G03B *17/26*
U.S. Cl. 396—512 **19 Claims**

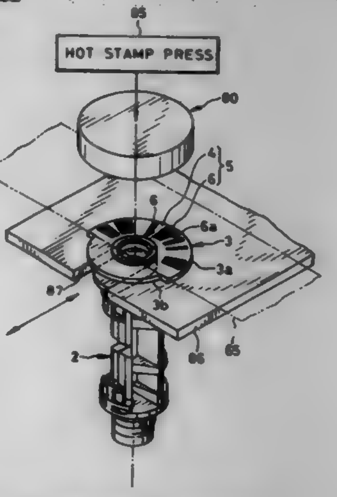

1. A photographic film cassette comprising:
a spool with a roll of filmstrip wound thereon;
a disc secured to or formed integrally with the spool; and
a bar code disposed on an outer surface of the disc, the bar code being constituted of a pattern of alternating low level segments and high level segments arranged in correspondence with a bit pattern of binary data;
wherein the high level segments are formed by a high reflective metallic material transferred onto the outer surface of the disc, such that the boundaries between the high level segments and low level segments are distinct.

5,701,539
CAMERA
Kenichiro Amano, Tokyo, Japan, assignor to Canon Kabushiki Kaisha, Tokyo, Japan
Filed May 17, 1996, Ser. No. 650,886
Claims priority, application Japan, Jun. 1, 1995, HEI 07-156675
Int. Cl.⁶ G03B *1/00;7/00;17/26*
U.S. Cl. 396—515 **12 Claims**

1. A camera arranged to use a film cartridge having a rotary member which rotates in association with transport of a film and which is provided with a code, said camera comprising:
a) a rotation detecting circuit for detecting a rotating state of the rotary member;

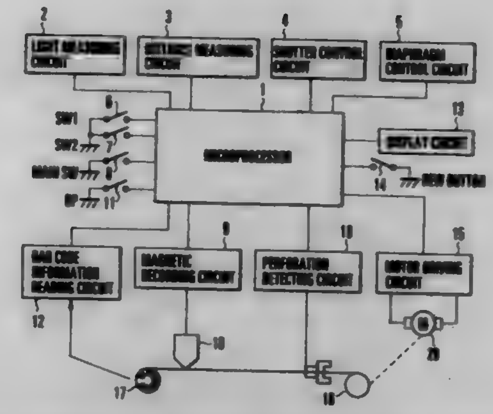

b) a rewinding state detecting circuit for detecting whether a process of rewinding the film into the film cartridge has reached a predetermined state in rewinding the film; and
c) a control circuit for controlling a rewinding action of the film on the basis of the rotating state detected by said rotation detecting circuit after said rewinding state detecting circuit detects that the process of rewinding the film into the film cartridge has reached the predetermined state, wherein said control circuit stops the rewinding action after the rotary member performs a predetermined amount of rotation detected by the rotation detecting circuit irrespective of the code pattern.

5,701,540
PHOTOGRAPHIC PROCESSOR AND IMPROVED FILTER ASSEMBLY
John Howard Rosenburgh, Hilton; Ralph Leonard Piccinino, Jr., Rush, and David Lynn Patton, Webster, all of N.Y., assignors to Eastman Kodak Company, Rochester, N.Y.
Filed Sep. 30, 1996, Ser. No. 723,801
Int. Cl.⁶ G03D *3/06*
U.S. Cl. 396—565 **13 Claims**

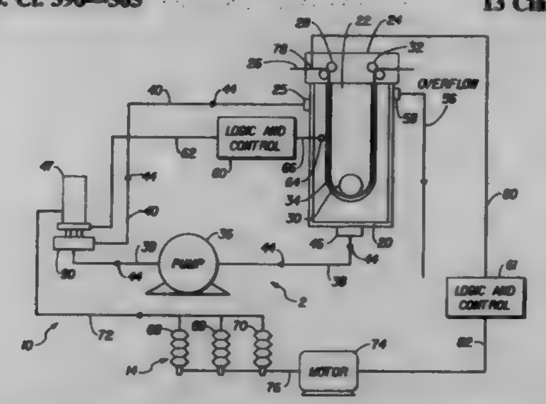

1. A filter assembly for use in a photographic processing apparatus comprising:
a housing having an internal chamber, a chamber inlet for allowing a processing solution to flow into said internal chamber, a chamber outlet for allowing processing solution to flow out of said internal chamber, an air bleed passage having a first connecting end in fluid communication with said internal chamber and an outlet connecting end in fluid communication with said chamber outlet, said first connecting end being located with respect to said internal chamber so that trapped air will be removed from said receiving section.

5,701,541
AUTOMATIC PROCESSING MACHINE FOR SILVER HALIDE PHOTOGRAPHIC LIGHT-SENSITIVE MATERIALS
Yutaka Ueda; Ken Okauchi, and Shigeharu Koboshi, all of Hino, Japan, assignors to Konica Corporation, Tokyo, Japan
Filed Jul. 29, 1996, Ser. No. 681,868
Claims priority, application Japan, Aug. 11, 1995, 7-205756
Int. Cl.⁶ G03D *13/00*
U.S. Cl. 396—569 **21 Claims**

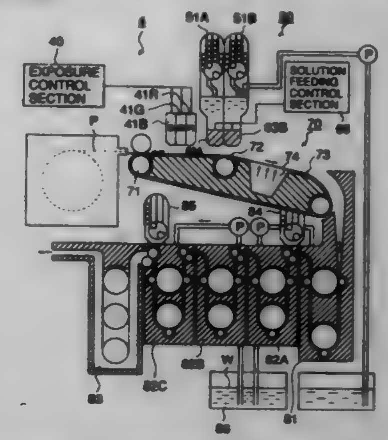

1. An apparatus for processing a silver halide photographic material having an emulsion surface, wherein an exposure signal representing a light amount is determined from an image signal representing a density level of an image and a portion of the emulsion surface is exposed to a light on the basis of the exposure signal, the apparatus comprising;
a container in which a processing solution to process the silver halide photographic material is stored;
supplying means located so as to be spaced from the emulsion surface of the silver halide photographic material and supplying the processing solution from the container to the emulsion surface through a space;
converting means for converting one of the density level of the image signal and the light amount of the exposure signal into a processing signal representing an amount of the processing solution; and
regulating means for regulating an amount of the processing solution for each portion of the emulsion surface in accordance with the processing signal so that the regulated amount of the processing solution is different from portion to portion on the emulsion surface depending on an exposed light amount of each portion.

5,701,542
AUTOMATIC DEVELOPING APPARATUS FOR PHOTOSENSITIVE LITHOGRAPHIC PRINTING PLATES
Hiroyuki Sasayama, Shizuoka, Japan, assignor to Fuji Photo Film Co., Ltd., Kanagawa, Japan
Filed Sep. 30, 1996, Ser. No. 723,277
Claims priority, application Japan, Sep. 29, 1995, P.HEI.7-253472
Int. Cl.⁶ G03D *3/02;3/13*
U.S. Cl. 396—578 **10 Claims**

1. An automatic developing apparatus for photosensitive lithographic printing plates, comprising a development vessel storing a plate developer and a replenishing apparatus for replenishing a predetermined amount of development replenisher in accordance with an electric conductance of the plate developer, the replenishing apparatus comprising:
an electric conductance sensor detecting the electric conductance of the plate developer;
a delivery device delivering the development replenisher into the development vessel;
a timer detecting an elapsed time from replenishment of the development replenisher; and

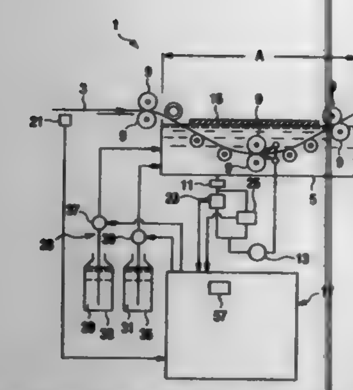

a control device for setting a reference electric conductance and for controlling the delivery device to replenish the development replenisher when the electric conductance detected by the electric conductance sensor has fallen below the set reference electric conductance, the control device calculating a carbon dioxide exhaustion replenisher ratio for replenishing the development replenisher in accordance with the elapsed time and the predetermined amount of the development replenisher.

5,701,543

CARTRIDGE CASE STOCKER APPARATUS IN AUTOMATIC FILM DEVELOPMENT PROCESSOR MACHINE

Keigo Arimoto, Wakayama, Japan, assignor to Noritsu Koki Co., Ltd., Wakayama, Japan

Filed Sep. 12, 1996, Ser. No. 713,029

Claims priority, application Japan, Sep. 19, 1995, 7-240124

Int. Cl.⁶ G03D *3/08*

U.S. Cl. 396—620 **4 Claims**

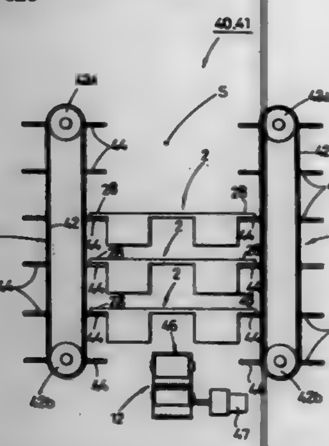

1. A cartridge case stocker apparatus for use in an automatic film development processor machine comprising:

a pair of lifting devices movably arranged opposite to each other to have a space therebetween for detachably storing a number of cartridge cases and driven by a drive device; and

rows of support plates mounted at substantially equal intervals to the lifting devices for engaging with and holding the two edges of each cartridge case with a corresponding pair of support plates.

5,701,544

PROCESS FOR PRODUCING COLOR FILTER

Kazuya Ishiwata, Yokosuka; Yasuyuki Watanabe, Chigasaki; Naoya Nishida, Hadano, and Akira Unno, Hiratsuka, all of Japan, assignors to Canon Kabushiki Kaisha, Tokyo, Japan

Division of Ser. No. 269,907, Jul. 6, 1974. This application Oct. 26, 1995, Ser. No. 548,516

Claims priority, application Japan, Jul. 7, 1993, 5-191839; Jul. 7, 1993, 5-191840

Int. Cl.⁶ G03D *3/02;5/00;3/08*

U.S. Cl. 396—609 **19 Claims**

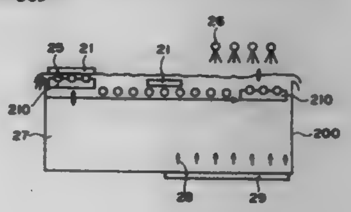

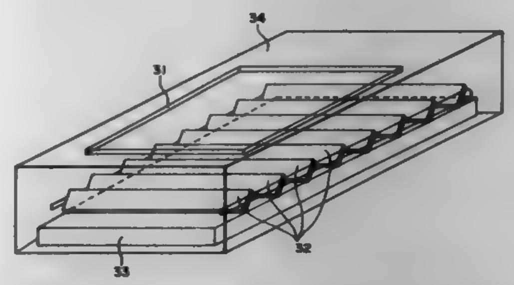

1. A developing apparatus for developing a pre-baked and exposed layer of a color filter material comprising a colorant dispersed in a photosensitive resin formed on a substrate to leave a color filter pattern on the substrate; said developing apparatus comprising:

a means for containing a developer liquid in which the substrate is dipped,

a projection means for projecting a vibrating wave toward the substrate, and

a means including at least two rotatable plates and disposed between the projection means and the substrate for reflecting or diffusing the vibrating wave.

5,701,545

PHOTOGRAPHIC PROCESSING

John Richard Fyson, Hackney; Christopher Barrie Rider, New Malden; Philip Coldrick, Hayes, and Janet Linda Menton, Pinner, all of United Kingdom, assignors to Eastman Kodak Company, Rochester, N.Y.

Filed May 2, 1996, Ser. No. 642,096

Claims priority, application United Kingdom, May 4, 1995, 9509039

Int. Cl.⁶ G03D *3/02*

U.S. Cl. 396—626 **18 Claims**

1. A method of processing a photographic material in a photographic processing apparatus comprising contacting said material with a processing solution, and

replenishing said processing solution with replenishment chemistry at a rate that is controlled by using an algorithm wherein at least one of the terms of said algorithm is determined by information associated with said photographic material, which information is silver coverage, silver halide ratio, gelatin coverage, coupler coverage, or inhibitor coverage.

5,701,546

PARALLEL INTERFACE CIRCUIT HAVING A N-BYTE BUFFER AND TANSMITTING THE N BYTE DATA ON A BYTE-BY-BYTE BASIS IN RESPONSE TO INTERRUPT REQUEST SIGNAL

Haruyuki Shimomura, Nagoya, and Toshiki Narukawa, Kasugai, both of Japan, assignors to Brother Kogyo Kabushiki Kaisha, Nagoya, Japan

Filed Jul. 26, 1994, Ser. No. 280,539

Claims priority, application Japan, Aug. 6, 1993, 5-196486

Int. Cl.⁶ G06F *13/00*

U.S. Cl. 395—849 **20 Claims**

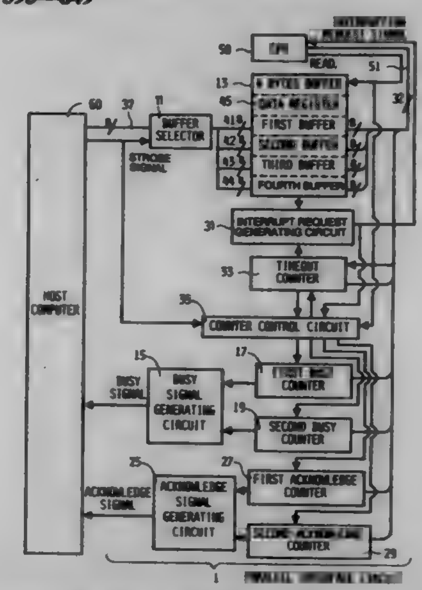

1. A parallel interface for receiving parallel data for a peripheral processor output by an external host computer, comprising:

a handshake signal generating circuit generating a handshake signal in response to a byte of parallel data and a strobe signal output by the host computer, the handshake signal indicating to the external host computer reception of the byte of parallel data by the parallel interface;

data storing means for storing a predetermined number n of the bytes of parallel data received from the host computer, where $n \geq 2$; and

an interrupt request signal generating circuit generating an interrupt request signal to the peripheral processor at least when the number of bytes of parallel data stored in the data storing means equals the predetermined number n;

wherein, when said data storing means receives a read signal from the peripheral processor in response to the interrupt request signal, the number of bytes of parallel data stored in the data storage means are simultaneously output in parallel to the peripheral processor.

5,701,547

SHEET FEEDING APPARATUS HAVING MEANS FOR DETERMINING THE LEADING EDGE OF A SHEET

Masakatsu Yamada, Kawasaki; Minoru Yokoyama, and Takeshi Kohno, both of Yokohama, all of Japan, assignors to Canon Kabushiki Kaisha, Tokyo, Japan

Continuation of Ser. No. 122,935, Sep. 20, 1993, abandoned. This application Jun. 26, 1996, Ser. No. 669,827

Claims priority, application Japan, Sep. 28, 1992, 4-281098

Int. Cl.⁶ G03G *21/00*

U.S. Cl. 399—1 **18 Claims**

12. A sheet feeding apparatus, comprising:

holding means for holding a rolled sheet;

feeding means for feeding the rolled sheet while drawing the sheet from said holding means;

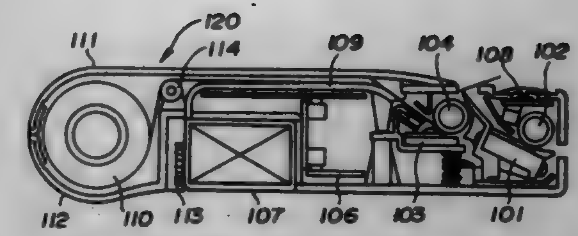

a rotating member disposed between said holding means and said feeding means for guiding the sheet in contact therewith only in a vicinity of which includes a central portion in a width direction; and

a detachable cover for holding said holding means and said rotating member.

5,701,548

COPYING SYSTEM USING A REMOTE DEVICE FOR CONTROLLING AN OPERATION OF A COPIER

Toru Okatani, Kobe, Japan, assignor to Minolta Co., Ltd., Osaka, Japan

Division of Ser. No. 35,235, Mar. 22, 1993, Pat. No. 5,440,371. This application Feb. 2, 1995, Ser. No. 382,903

Claims priority, application Japan, Mar. 26, 1992, 4-102180

Int. Cl.⁶ G03G *15/00*

U.S. Cl. 399—8 **43 Claims**

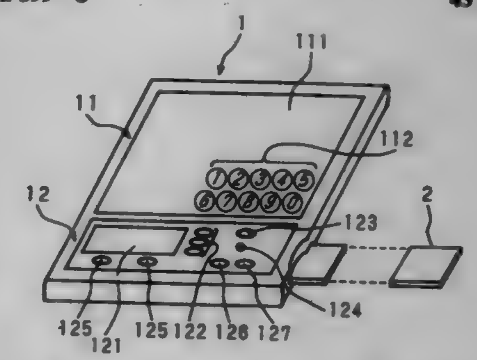

1. A copying system consisting of a copying machine and a copying condition setting device for setting copying conditions for the copying machine by means of wireless communication, comprising:

transmitting means of the copying machine, for transmitting various kinds of information;

receiving means of the copying condition setting device, for receiving the information transmitted from said transmitting means of the copying machine;

transmitting means of the copying condition setting device, for transmitting various kinds of information in accordance with the information received by said receiving means of the copying condition setting device; and

receiving means of the copying machine, for receiving the information transmitted from said transmitting means of the copying condition setting device;

wherein

said transmitting means of the copying machine transmits information for identifying the copying machine, and said receiving means of the copying condition setting device receives the transmitted information and thereby identifies the copying machine, whereupon said transmitting means of the copying condition setting device transmits information for identifying the copying condition setting device to the identified copying machine.

5,701,549
IMAGE FORMING APPARATUS WITH MODULAR STAGING ASSEMBLY

Harald Portig, Versailles; Kevin Dean Schoedinger, Nicholasville; Richard Andrew Seman, Jr., and Phillip Byron Wright, both of Lexington, all of Ky., assignors to Lexmark International, Inc., Lexington, Ky.

Filed Jan. 22, 1996, Ser. No. 589,768
Int. Cl.⁶ G03G *15/00*

U.S. Cl. 399—36 **29 Claims**

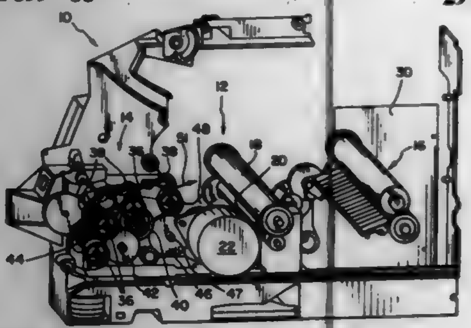

1. An image forming apparatus, comprising:
an electrophotographic assembly including a photosensitive element and a first drive unit for rotating said photosensitive element;
a paper feed assembly including a mechanism for conveying a transfer sheet to said photosensitive element; and
an input power device coupled to said mechanism, said input power device being installable into said image forming apparatus, said input power device selectively comprising one of:
a removable power transfer device interconnecting said first drive unit to said mechanism when installed in said image forming apparatus; and
a second drive unit coupled to said mechanism when installed in said image forming apparatus.

5,701,550
METHOD AND APPARATUS FOR CONTROLLING CHARGE ON TONER IN A TONING STATION

Kevin D. Loftus, Rochester; Thomas K. Hilbert, Spencerport; David A. Roets, Rochester, and Jerry E. Livadas, Webster, all of N.Y., assignors to Eastman Kodak Company, Rochester, N.Y.

Filed Mar. 22, 1996, Ser. No. 620,781
Int. Cl.⁶ G03G *15/08*

U.S. Cl. 399—44 **2 Claims**

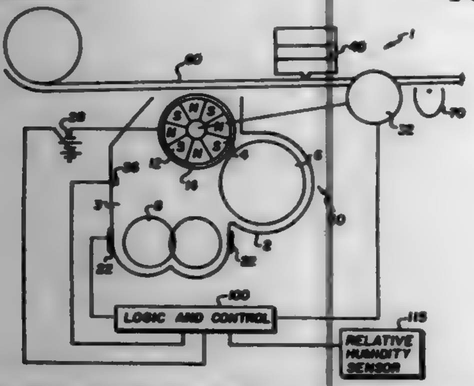

1. A method of controlling the charge on toner in a toning station in an image forming apparatus including a logic and control receiving input indicative of how long the image forming apparatus has been in an idle condition, which image forming apparatus generates sufficient heat in operation due in part to rotation of a magnetic core in the toning station and the relative humidity in the toning station gradually decreases as the image forming apparatus is continually operated, said method comprising: inputting to the logic and control of the image forming apparatus information indicative that the apparatus is in a run condition when it is forming images, that it is in an idle condition when it is ready to make images but not in fact making images and in an off condition when the image forming apparatus is not ready to make images without a substantial warm-up time, and applying heat to the station during a time period in which the relative humidity is likely to be high to reduce such relative humidity, such heat aplication occurring during both the off condition and at least a portion of the idle condition, and wherein the step of applying heat to the station is responsive to an input that the image forming apparatus has been in an idle condition for a predetermined period of time.

5,701,551
IMAGE FORMING APPARATUS INCLUDING CONTROL MEANS FOR CONTROLLING AN OUTPUT FROM EN ELECTRICAL POWER SOURCE TO A CHARGING MEMBER FOR CHARGING AN IMAGE BEARING MEMBER

Takao Honda, Yokohama; Makoto Yanagida, Kawasaki; Fumihiro Arahira, Ninomiyamachi, and Takeo Yamamoto, Yokohama, all of Japan, assignors to Canon Kabushiki Kaisha, Tokyo, Japan

Continuation of Ser. No. 518,221, Aug. 23, 1995, abandoned, which is a continuation of Ser. No. 377,680, Jan. 26, 1995, abandoned, which is a continuation of Ser. No. 91,186, Jul. 14, 1993, abandoned. This application Nov. 15, 1996, Ser. No. 749,829

Claims priority, application Japan, Jul. 16, 1992, 4-189495
Int. Cl.⁶ G03G *15/02*

U.S. Cl. 399—50 **26 Claims**

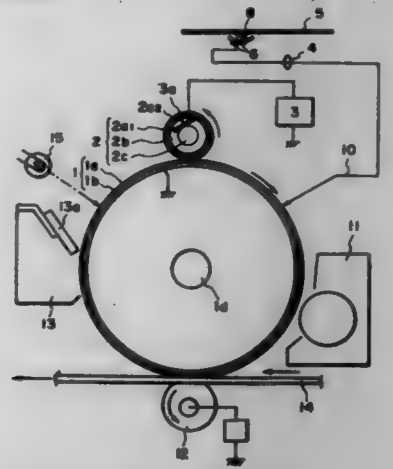

1. An image forming apparatus comprising:
a movable image bearing member;
image forming means for forming a toner image on said image bearing member;
a charging member for charging said image bearing member in a charging station;
an electrical power source for supplying power to said charging member;
detecting means for detecting a voltage-current characteristic between said charging member and said image bearing member; and
control means for controlling the output of said electrical power source, in accordance with an output of said detecting means, when a surface area portion of said image bearing member, where a toner image is not going to be formed as said image bearing member rotates, is in the charging station.

5,701,552
ELECTROGRAPHIC PRINTER COMPRISING A MAGNETIC BRUSH AND A HALL EFFECT MAGNETIC SENSOR

Thomas M. Stephany, Churchville; William Mey, Rochester, and Edward P. Furlani, Lancaster, all of N.Y., assignors to Eastman Kodak Company, Rochester, N.Y.

Filed Jun. 7, 1996, Ser. No. 659,810
Int. Cl.⁶ G03G *15/09*

U.S. Cl. 399—53 **2 Claims**

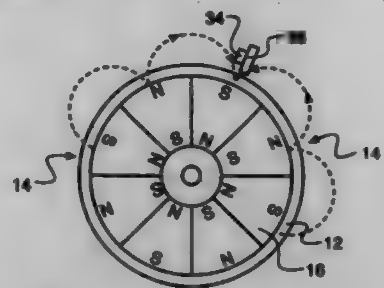

1. An electrographic printer, comprising:
a) a magnetic brush having an outer shell and rotating multi-pole magnet within the outer shell;
b) an electrographic print head mounted next to the outer shell of the magnetic brush;
c) a Hall effect sensor located adjacent to the magnetic brush for detecting a field produced by the multi-pole magnet parallel to the surface of the shell and producing a sinusoidal output signal, the Hall sensor producing zero output signal when the field is perpendicular to the outer shell; and
d) a pulse control circuit connected to the Hall effect sensor generating and supplying printing pulses to the electrographic print head, when the sinusoidal output crosses zero.

5,701,553
MULTI-COLOR IMAGE FORMING APPARATUS HAVING HIGH DEVELOPABILITY WITHOUT FOGGING AND WITHOUT MIXING OF COLORS

Isao Endo; Toru Komatsu; Yotaro Sato; Hiroyuki Nomori; Kunio Shigeta, and Masahiro Onodera, all of Hachioji, Japan, assignors to Konica Corporation, Tokyo, Japan

Filed Jul. 24, 1995, Ser. No. 506,389
Claims priority, application Japan, Sep. 8, 1994, 6-214811; Oct. 7, 1994, 6-244059
Int. Cl.⁶ G03G *15/06*

U.S. Cl. 399—55 **36 Claims**

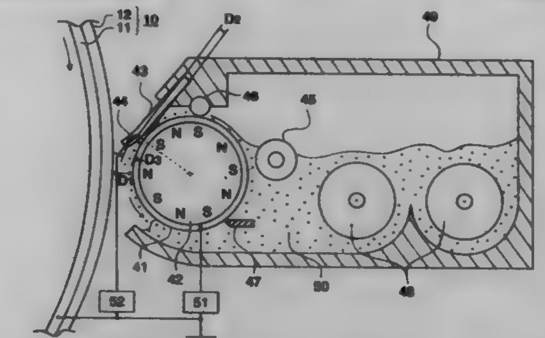

1. A development apparatus for developing a latent image formed on an image forming body with a developer so as to obtain a toner image, comprising:
a developer conveyance means for conveying said developer, including a toner, to a development zone, between said developer conveyance means and said image forming body, from an upstream side of said development zone in a conveyance direction to a downstream side thereof;
a plate member having an electrode portion, positioned at said upstream side of said development zone, wherein a downstream end portion of said plate member is positioned in contact with said development zone; and
a power supply means for applying a first voltage, including a DC component and an AC component, to said developer conveyance means so that an electric field is generated at said development zone, said power supply means applying a second voltage, including a DC component, to said electrode portion of said plate member;
said plate member for controlling said electric field with said second voltage; said development apparatus satisfies:

$$V_{AC}>|V_{DEN}|-|V_{DC}|$$

when an amplitude of said AC component of said first voltage is defined as V_{AC} (volts), said DC component of said first voltage is defined as V_{DC} (volts), and said DC component of said second voltage is defined as V_{DEN} (volts); and said development apparatus satisfies:

$$10\cdot|Q_t|\cdot d_t\cdot D_1>V_{AC}>5\cdot|Q_t|\cdot d_t\cdot D_2$$

when a closest distance from said developer conveyance means to said image forming body is defined as D_1 (mm), a closest distance from said developer conveyance means to said electrode portion is defined as D_2 (mm), an average charge-to-mass of said toner is defined as Q_t (μC/g), and an average particle size of said toner is defined as d_t (μm).

5,701,554
FIXING APPARATUS HAVING CONTROLLER FOR SETTING A TARGET TEMPERATURE AND FOR ESTIMATING THE AMOUNT OF HEAT TRANSFERRED TO A PRESSURE ROLLER

Hiroshi Tanaka; Toru Fujita, and Tahei Ishiwatari, all of Nagano, Japan, assignors to Seiko Epson Corporation, Tokyo, Japan

Filed Jun. 12, 1995, Ser. No. 489,478
Claims priority, application Japan, Jun. 10, 1994, HEI 6-129293; Nov. 18, 1994, HEI 6-284822; Mar. 24, 1995, HEI 7-066571

Int. Cl.⁶ G03G *15/20*

U.S. Cl. 399—69 **33 Claims**

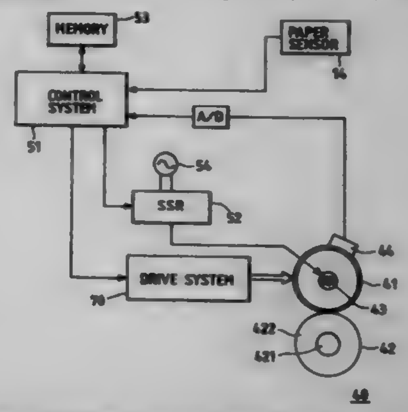

1. An image forming apparatus comprising:
a process unit for forming an unfixed toner image on a sheet;
a fixing unit for fixing the unfixed toner image onto said sheet, said fixing unit comprising a heating member and a pressurizing member which are in contact with each other under pressure to form a fixing nip;
temperature detection means for detecting a temperature of said heating member of said fixing unit;
control means for controlling the temperature of said heating member based on an output from said temperature detection means;
estimation means for estimating an amount of heat transferred from said heating member to said pressurizing member; and
fixing condition changing means for changing a fixing condition of said fixing unit based on the amount of transferred heat estimated by said estimation means, wherein

said control means determines a control target temperature of said heating member and proportionally controls an amount of electric power supplied to said heating member in proportion to a difference between said detected temperature of said heating member and said target temperature, and

wherein said estimation means estimates the amount of heat transferred to said pressurizing member based on the control target temperature of said control means and the temperature of said heating member which is detected by said temperature detection means.

5,701,555

SERIAL ELECTROPHOTOGRAPHY APPARATUS AND FIXING TEMPERATURE CONTROL METHOD

Syuzo Masuda, Saijo, and Ryouichi Iwama, Kawasaki, both of Japan, assignors to Fujitsu Limited, Kawasaki, Japan

Continuation-in-part of Ser. No. 289,531, Aug. 12, 1994, Pat. No. 5,506,666. This application Jul. 25, 1995, Ser. No. 506,696

Claims priority, application Japan, Aug. 18, 1994, 6-194442

Int. Cl.^{6} G03G *15/20*

U.S. Cl. 399—69 **13 Claims**

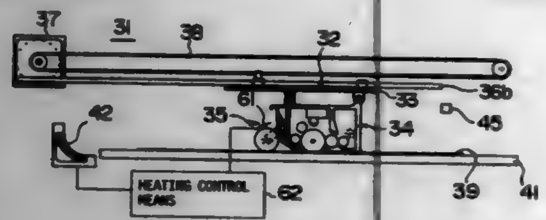

1. A serial electrophotography apparatus comprising:

conveying means for conveying a recording sheet;

a carriage comprising process means for forming a latent image and developing it so as to produce a developed image on an image carrier having a rotation axis parallel to a direction along which said conveying means conveys said recording sheet, and fixing means using a fixing member for fixing said developed image to said recording sheet after said developed image has been transferred to said recording sheet; transfer means for transferring said developed image produced on said image carrier to said recording sheet;

moving means for moving said carriage on said transfer means along a direction perpendicular to said direction along which said conveying means conveys said recording sheet, said carriage thus repeating a go-and-return operation in which said carriage fixes a line of said developed image onto said recording sheet while moving and then returns to a predetermined position;

heating means for heating said fixing member to a predetermined temperature;

measuring means for measuring a temperature of said fixing member; and

heating control means for driving said heating means so as to make the temperature of said fixing member be said predetermined temperature based on the temperature measured by said measuring means, the driving being performed either when said carriage is located at said predetermined position or while said carriage is returning to said predetermined position after said go-and-return operation has been performed a predetermined number of times.

5,701,556

THERMAL FIXING DEVICE HAVING TEMPERATURE CONTROL

Katsumi Sugimoto, Kawasaki, Japan, assignor to Fujitsu Limited, Kawasaki, Japan

Filed Dec. 7, 1994, Ser. No. 350,633

Claims priority, application Japan, Jan. 31, 1994, 6-028877

Int. Cl.^{6} G03G *15/20*

U.S. Cl. 399—70 **33 Claims**

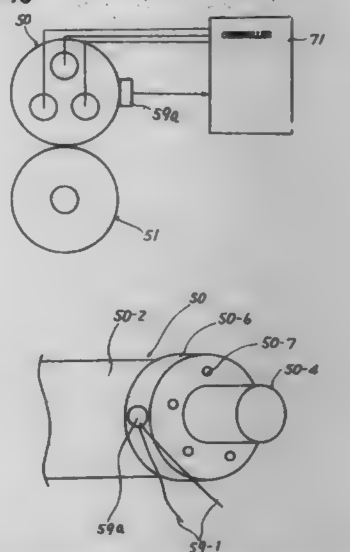

4. A thermal fixing device for thermally fixing a toner image on a recording medium comprising:

a heat roller having a heat source and positioned on the side of the toner image on the recording medium in order to fix the toner image;

a pressurizing member, positioned opposite to the side of the toner image on the recording medium, for pushing the recording medium against said heat roller;

temperature detecting means for detecting a temperature of said heat roller; and

a control circuit for controlling said heat source of said heat roller by comparing a detected temperature of said temperature detecting means with a set temperature, sequentially stepwise increasing the set temperature up to a designated temperature when starting the operation of said device and, at the same time, controlling a generated energy of said heat source to sequentially decrease the generated energy thereof, wherein

said heat roller includes a plurality of heat sources, and

said control circuit controls the number of said heat sources for evolving the heat in order to control the generated energy of said heat source to sequentially decrease the generated energy.

14. A thermal fixing device for thermally fixing a toner image on a recording medium, comprising:

a heat roller including a heat source, an elementary tube provided along the periphery of said heat source and a robber member provided along the periphery of said elementary tube, said heat roller being positioned on the side of the toner image on the recording medium in order to fix the toner image;

a pressurizing member, positioned opposite to the side of the toner image on the recording medium, for pushing the recording medium against said heat roller;

temperature detecting means provided in a position for detecting a temperature of said elementary tube in order to detect a temperature of said heat roller;

a control circuit for controlling said heat source of said heat roller by comparing a detected temperature of said temperature detecting means with a set temperature; and

a heat emission preventive member formed with a plurality of air holes, covering an end portion of said elementary tube, for preventing a heat emission from the end portion of said elementary tube.

5,701,557

MACHINE GRAPHS AND CAPABILITIES TO REPRESENT DOCUMENT OUTPUT TERMINALS COMPOSED OF ARBITRARY CONFIGURATIONS

Marc W. Webster, Rochester, N.Y.; Vijay A. Saraswat, Fremont; Markus P. J. Fromherz, Palo Alto, both of Calif.; John C. Austin, Rochester, N.Y.; Paul A. Rulli, Webster, N.Y., and Daniel Lawrence McCue, III, Rochester, N.Y., assignors to Xerox Corporation, Stamford, Conn.

Filed Nov. 28, 1995, Ser. No. 563,317

Int. Cl.^{6} G03G *21/14;* **H04N** *1/00;1/23;* **G06F** *15/00*

U.S. Cl. 399—77 **19 Claims**

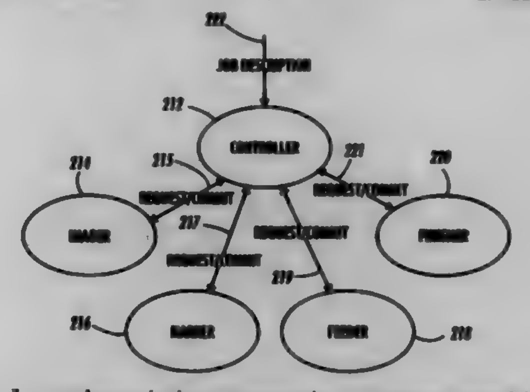

3. In an electronic image processing apparatus comprising a controller and a plurality of modules, each of the modules including an associated processor, each of the processors storing data related to operational capabilities of the associated module, an interconnection of the modules being represented as a graph with the modules being nodes, a method of scheduling the image processing apparatus comprising the steps of:

receiving a job requirement from a job source,

evaluating the graph representing the interconnection of the modules,

determining that the given interconnection of the modules is capable of completing the job requirement, and

responding to the job requirement to direct the modules to complete the job requirement.

5,701,558

DEVELOPING APPARATUS FOR PREVENTING DEVELOPER FROM LEAKING FROM A DEVELOPER CONTAINER

Hisayoshi Kojima, Yokohama, Japan, assignor to Canon Kabushiki Kaisha, Tokyo, Japan

Filed Nov. 23, 1994, Ser. No. 347,097

Claims priority, application Japan, Nov. 25, 1993, 5-317548

Int. Cl.^{6} G03G *15/08*

U.S. Cl. 399—103 **9 Claims**

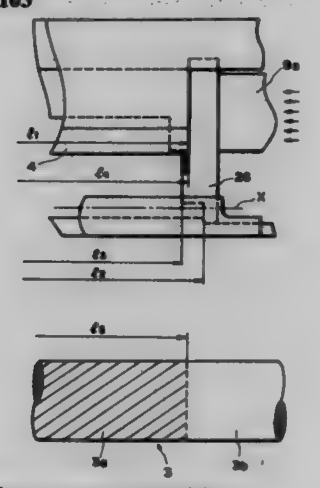

1. A developing apparatus comprising:

a developer container, having a developing opening, for containing a developer;

a rotatable developer carrying member, in the opening, for carrying the developer;

a regulating member for regulating an amount of the developer supplied out of said container on said developer carrying member;

a developer scatter preventing sheet cooperating with said developer carrying member to form a nip permitting passage of the developer into said developer container and to prevent scattering of the developer out of said developer container;

a pair of sealing members press-contacted to opposite ends of said developer carrying member,

wherein said sealing members are provided along a circumferential direction of said developer carrying member over a regulating portion of said regulating member and the nip to press said sheet,

wherein a width of a developer layer supplied out of said container substantially corresponds to a distance between said sealing members adjacent the regulating portion, and

wherein the distance between said sealing members at the nip is larger than the distance therebetween adjacent the regulating portion.

5,701,559

CLEANERLESS IMAGE FORMING APPARATUS USING AN ELECTROPHOTOGRAPHIC PROCESS

Yoshimitsu Ootaka, Shizuoka-ken; Tomoyuki Kato, Mishima, and Katsutoshi Sato, Shizuoka-ken, all of Japan, assignors to Kabushiki Kaisha TEC, Shizuoka, Japan

Filed Sep. 5, 1996, Ser. No. 708,700

Claims priority, application Japan, Sep. 13, 1995, 7-235751

Int. Cl.^{6} G03G *15/30*

U.S. Cl. 399—149 **23 Claims**

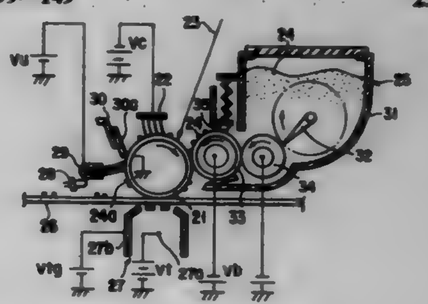

1. An image forming apparatus comprising:

an image holding member;

a charging device for charging a surface of said image holding member at a constant potential;

an exposing device for exposing said image holding member charged by said charging device to form an electrostatic latent image;

a developing device for developing said electrostatic latent image by selectively sticking toner to the surface of said image holding member so as to form a toner image corresponding to the electrostatic latent image formed by said exposing device; and

a transfer device for transferring to a transfer material the toner image formed by said developing device on the surface of said image holding member,

wherein said developing device develops the toner image and simultaneously sucks and recovers residual toner remaining on the surface of said image holding member after transfer, and

wherein said image forming apparatus further comprises a scraping device that is pressed against the surface of said image holding member and scrapes the surface of said image holding member, while allowing said residual toner to pass through.

5,701,560

IMAGE FORMING APPARATUS HAVING A PHOTOSENSITIVE BODY FORMED OF A BASE MATERIAL CONSISTING OF AS_2SE_3 OR A-SI AND A METHOD

Akio Tsujita, Hitachinaka; Masayasu Anzai, Hitachi, and Tsuneaki Kawanishi, Toukai-mura, all of Japan, assignors to Hitachi Koki Co., Ltd., Tokyo, Japan

Filed Jul. 3, 1996, Ser. No. 675,545

Claims priority, application Japan, Jul. 14, 1995, 7-179082; Nov. 24, 1995, 7-306097; Apr. 4, 1996, 8-082775

Int. Cl.[6] G03G *15/00*

U.S. Cl. 399—159 **25 Claims**

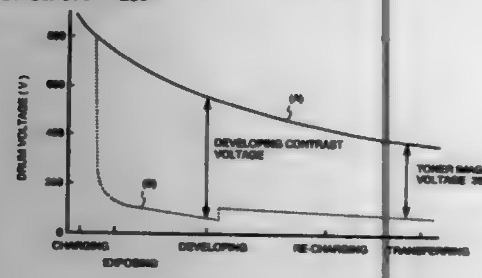

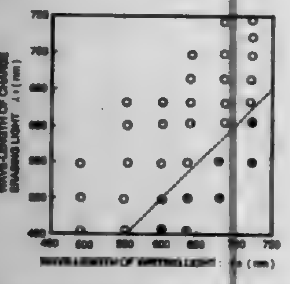

12. A method of image forming using an image forming apparatus comprising the steps of:
- forming an electrostatic latent image on a charged surface of a photosensitive body by exposing the charged surface of the photosensitive body to a writing light;
- developing said latent image using a toner to form a toner image;
- transferring said toner image to an image holding body; and
- erasing the charge on the surface of said photosensitive body after completion of transferring of the toner image using a charge erasing light; wherein
- said photosensitive body is formed of a base material selected from the group consisting of As_2Se_3 and a-Si;
- the wavelength λ_0 of the writing light used for said exposure is limited to a wavelength not larger than 780 nm;
- the wavelength λ_1 of the charge erasing light used for said charge erasing is limited to a wavelength smaller than 680 nm;
- the time T_1 from completion of said exposure to initiation of said development is limited within the range of 70 milliseconds to 300 milliseconds; and
- a film thickness of said photosensitive body is limited within a range of 40 μm to 80 μm.

5,701,561

METHOD AND APPARATUS FOR APPLYING LIQUID TONER TO A PRINT MEDIUM USING MULTIPLE TONER APPLICATORS FOR EACH LIQUID TONER

Thomas A. Speckhard, Cottage Grove, Minn., assignor to Minnesota Mining And Manufacturing Company, St. Paul, Minn.

Filed Sep. 26, 1995, Ser. No. 533,914

Int. Cl.[6] G03G *15/01;15/10*

U.S. Cl. 399—233 **6 Claims**

5. A single-pass electrostatic printer, having a plurality of spaced, electrostatic charging heads, comprising:

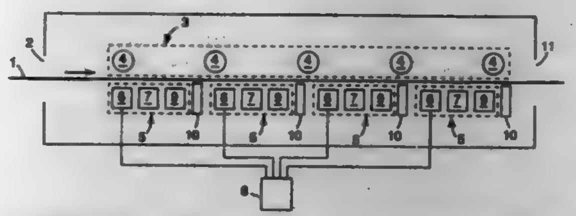

- a plurality of toner applicators positioned between each pair of consecutive charging head;
- wherein the plurality of toner applicators allows voltage of each charging head to remain at an acceptably high level during a desired printing speed, while residual voltage is low enough to prevent excess color deposition affecting final print image.

5,701,562

DEVELOPING SLEEVE HAVING A CYLINDRICAL PORTION AND A NON-CYLINDRICAL PORTION PROVIDED BY THE SAME MEMBER, AND DEVELOPING DEVICE USING THE SLEEVE

Ryuji Araki, Kawasaki; Atsushi Kubota, Machida; Shinichi Sasaki, Fujisawa, and Koji Miura, Sagamihara, all of Japan, assignors to Canon Kabushiki Kaisha, Tokyo, Japan

Continuation of Ser. No. 248,494, May 24, 1994, abandoned. This application Apr. 1, 1996, Ser. No. 625,094

Claims priority, application Japan, May 26, 1993, 5-123970

Int. Cl.[6] G03G *15/08*

U.S. Cl. 399—265 **16 Claims**

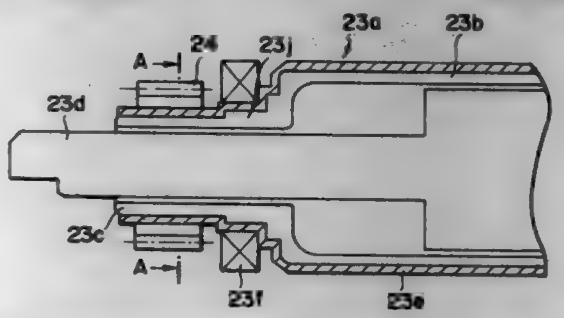

1. A developing sleeve comprising:
- a metal sleeve having a circular cross-section;
- a one piece rotation prohibiting portion formed at an end portion of said sleeve by drawing the end portion thereof, said rotation prohibiting portion having a non-circular cross-section; and
- a gear fixed to the rotation prohibiting portion.

5,701,563

DEVELOPING APPARATUS AND IMAGE-FORMING APPARATUS USING THE SAME

Yoshiyuki Fukuda; Katsura Kojima, and Tadashi Sugiyama, all of Shizuoka-ken, Japan, assignors to Kabushiki Kaisha TEC, Shizuoka, Japan

Filed Feb. 7, 1996, Ser. No. 598,230

Claims priority, application Japan, Feb. 14, 1995, 7-024962

Int. Cl.[6] G03G *15/08*

U.S. Cl. 399—284 **26 Claims**

1. A developing apparatus for developing a latent image formed on a surface of an image carrier with toner, comprising:
- a housing having a toner holding space for holding the toner, and a toner discharging aperture for discharging the toner in the toner holding space to the outer space;
- a developing roller rotatably held in the toner discharging aperture of the housing and rotated in a predetermined direction;
- a toner leveling member closing a gap between a peripheral surface of the developing roller and an edge of the toner discharging aperture at which the peripheral surface of the

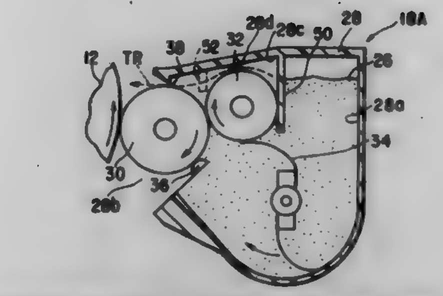

developing roller is moved out from the toner discharging aperture in the predetermined rotating direction of the developing roller, and slidably pressed against the peripheral surface of the developing roller;
- a toner supplying roller rotatably held in the toner holding space and pressed against the peripheral surface of the developing roller; and
- a sliding and closing member closing a gap between the peripheral surface of the toner supplying roller and a portion of the inner surface of the housing corresponding to a gap between the peripheral surface of the developing roller and an edge of the toner discharging aperture at which the peripheral surface of the developing roller is moved into the toner discharging aperture in the predetermined rotating direction of the developing roller, and slidably pressed against the peripheral surface of the toner supplying roller, the sliding and closing member having such a stiffness that keeps the sliding and closing member in contact with the peripheral surface of the developing roller when impact or vibration is applied to the developing apparatus, and preventing the toner from escaping through the gap from the toner discharging aperture to the outer space,

and wherein:
- the peripheral surface of the developing roller is arranged to face the surface of the image carrier on which the latent image is formed, the toner is supplied to the peripheral surface of the developing roller in the toner holding space by the rotation of the toner supplying roller, the toner is leveled by the toner leveling member on the peripheral surface of the developing roller by the rotation of the developing roller in its predetermined rotating direction, the toner is supplied from the peripheral surface of the developing roller to the surface of the image carrier, and the latent image on the surface of the image carrier is developed by the toner.

5,701,564

SCAVENGELESS DEVELOPMENT APPARATUS INCLUDING AN ELECTRODED DONOR ROLL HAVING A TRI-CONTACT COMMUTATOR ASSEMBLY

Delmer G. Parker, Rochester, N.Y., assignor to Xerox Corporation, Stamford, Conn.

Filed Sep. 26, 1996, Ser. No. 721,303

Int. Cl.[6] G03G *15/08*

U.S. Cl. 399—285 **10 Claims**

1. A development unit comprising:
- (a) a housing defining a mixing chamber storing developer material consisting of magnetic carrier particles and charged toner particles;
- (b) an electroded donor roll assembly mounted partially within the mixing chamber for forming a development nip with an image bearing member, and moving charged toner particles through the development nip;
- (c) a donor roll assembly including a donor roll having axially extending electrodes formed thereon, said donor roll assembly including a bias voltage source for biasing the electrodes, and a tri-contact commutator assembly mounted thereon and connected to said bias voltage source for commutating a bias

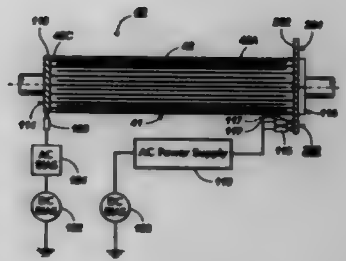

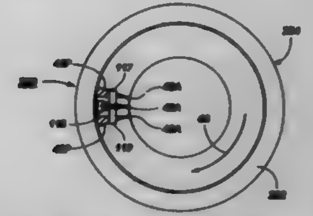

voltage to said electrodes while significantly reducing a risk of sporadic electrical arcing; said tri-contact commutator assembly including:
- (i) a disc forming a circular flange at one end of said donor roll;
- (ii) a series of commutator contact pads formed on said flange and connected to said electrodes; and
- (iii) a plurality of commutating members, mounted to contact said commutator pads and connected to said bias voltage source for commutating the bias voltage to said electrodes, said plurality of commutating members including (a) a first and a second high resistivity members, said first and said second high resistivity members being spaced from each other circumferentially relative to said circular flange, and (b) a third, low resistivity member spaced from said first and said second high resistivity members in a radial direction relative to the circular flange, so as to enable effective commutation of the bias voltage without significant risk of sporadic electrical arcing.

5,701,565

WEB FEED PRINTER DRIVE SYSTEM

Paul F. Morgan, Rochester, N.Y., assignor to Xerox Corporation, Stamford, Conn.

Filed Mar. 29, 1996, Ser. No. 624,280

Int. Cl.[6] G03G *15/01*

U.S. Cl. 399—299 **9 Claims**

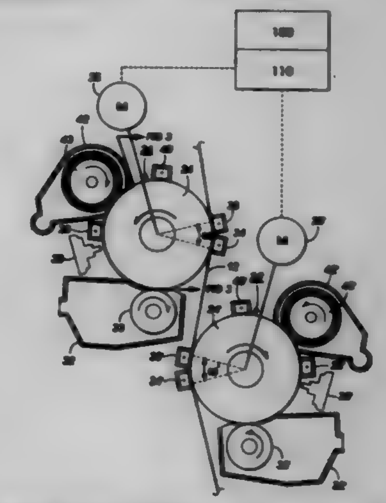

1. An electrographic multiple station printer for printing an image on a print web, which comprises:
- a plurality of toner image-producing electrostatographic stations each having rotatable endless surface means onto which a toner image can be formed;

means for conveying the web in succession past said stations;
means for controlling the speed and tension of the web while it is running past said stations;
a drive unit for each of said plurality of toner image-producing electrographic stations, wherein each of said drive units for each of said plurality of toner image-producing electrostatographic stations are torque limited so as to provide substantially only enough rotational torque to overcome drag forces on the rotatable endless surface means; and
transfer means for transferring the toner image on each rotatable surface means onto the web, wherein in said printer adherent contact of said web with said rotatable endless surface means is such that the movement of said web controls the peripheral speed of said rotatable endless surface means in synchronism with the movement of said web.

5,701,566
IMAGE TRANSFERRING DEVICE FOR AN IMAGE FORMING APPARATUS
Takashi Bisaiji, Yokohama; Hideo Yu, Tokyo; Yasunori Kawaishi, Narashino; Toshiaki Motohashi; Mitsuru Takahashi, both of Tokyo, and Hideki Kamiyama, Yokohama, all of Japan, assignors to Ricoh Company, Ltd., Tokyo, Japan
Continuation of Ser. No. 111,943, Aug. 26, 1993, abandoned.
This application Sep. 5, 1995, Ser. No. 523,208
Claims priority, application Japan, Aug. 28, 1992, 4-230254; Jun. 25, 1993, 5-155857
Int. Cl.^{6} G03G *15/01*
U.S. Cl. 399—302 **13 Claims**

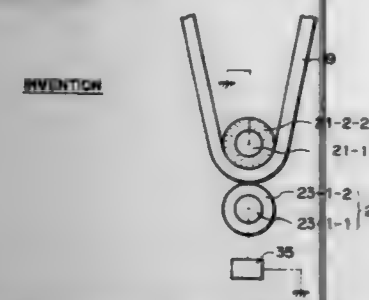

1. An image transferring device incorporated in an image forming apparatus for transferring a toner image from an intermediate transfer member to a sheet, said device comprising:
electric field forming means for forming an electric field for image transfer; and
an electrode member connected to ground and located at a back portion of said intermediate transfer member which faces said electric field forming means, said electrode member having a resistance which causes a current fed from said electric field forming means to flow to ground, wherein said electrode member directly contacts a surface of said intermediate transfer member opposite to a surface which said electric field forming means contacts and at a position where said electrode member faces said electric field forming means.

5,701,567
COMPLIANT TRANSFER MEMBER HAVING MULTIPLE PARALLEL ELECTRODES AND METHOD OF USING
Rodney R. Bucks, Webster; Patricia A. Dwyer, Pittsford; Thomas N. Tombs, Brockport; William B. Vreeland; Robert E. Zeman, both of Webster, and John W. May, Rochester, all of N.Y., assignors to Eastman Kodak Company, Rochester, N.Y.
Filed May 30, 1996, Ser. No. 655,536
Int. Cl.^{6} G03G *15/14*
U.S. Cl. 399—302 **24 Claims**

1. A layered intermediate transfer member comprising a compliant layer, a thin, hard layer on the compliant layer having a surface away from the compliant layer for receiving a toner image and a

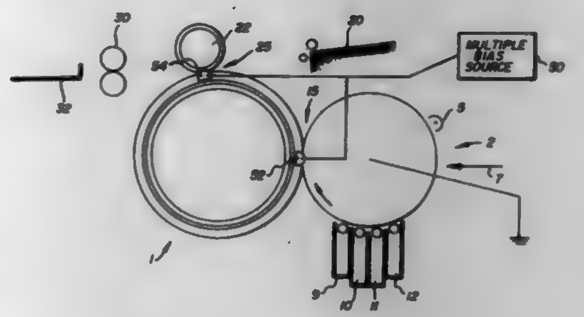

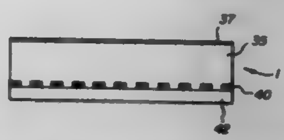

set of separately addressable electrodes positioned separated from the thin, hard layer by at least a portion of the compliant layer.

5,701,568
IMAGE FORMING APPARATUS HAVING DIELECTRIC CONSTANT RELATIONSHIP BETWEEN IMAGE BEARING MEMBER, INTERMEDIATE TRANSFER MEMBER AND CONTACT TRANSFER DEVICE
Koichi Hiroshima, Shizuoka-ken; Katsuhiko Nishimura, Yokohama; Toru Kosaka, Machida, and Yasuo Yoda, Numazu, all of Japan, assignors to Canon Kabushiki Kaisha, Tokyo, Japan
Filed Aug. 30, 1996, Ser. No. 705,822
Claims priority, application Japan, Sep. 1, 1995, 7-225239
Int. Cl.^{6} G03G *15/01*
U.S. Cl. 399—302 **10 Claims**

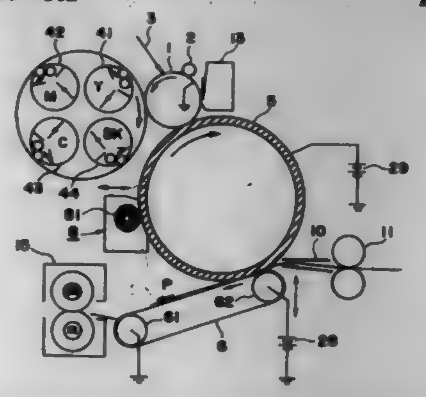

1. An image forming apparatus, comprising a first image-bearing member, an intermediate transfer member for receiving a transferable image formed on the first image-bearing member, and contact transfer means for transferring the transferable image from the intermediate transfer member to a transfer material; wherein
the first image-bearing member has a surface layer having a dielectric constant ϵ_d, the intermediate transfer member has a surface layer having a dielectric constant ϵ_{ITD} and the contact transfer means has a surface layer having a dielectric constant ϵ_{tr}, satisfying a relationship of; $\epsilon_d \leqq \epsilon_{ITD} \leqq \epsilon_{tr}$,
the intermediate transfer member exhibits a volume resistivity of 10^6–10^{10} ohm.cm (at an applied voltage of 1 kV), and
the contact transfer means exhibits a volume resistivity of 10^8–10^{15} ohm.cm (at an applied voltage of 1 kV).

5,701,569
IMAGE FORMING APPARATUS WITH TRANSFER MEMBER AND PARALLEL CIRCUIT OF GROUNDED ELECTRODE AND POWER SUPPLY
Masaharu Kanazawa, Suita; Toshiya Natsuhara, Takarazuka; Kazuyoshi Hara, Toyohashi, and Yasuo Tanaka, Okazaki, all of Japan, assignors to Minolta Co., Ltd., Osaka, Japan
Filed May 16, 1996, Ser. No. 648,750
Claims priority, application Japan, May 17, 1995, 7-118272; Nov. 13, 1995, 7-319730
Int. Cl.^{6} G03G *15/16*
U.S. Cl. 399—308 **19 Claims**

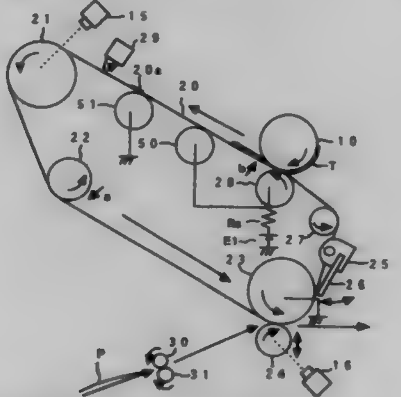

1. An image forming apparatus comprising:
a toner image carrying member which carries a toner image;
an intermediate transfer member opposite to the toner image carrying member;
a charging device which charges the intermediate transfer member for transferring the toner image from the toner image carrying member;
a resistance;
a power source which is connected to the charging device through said resistance and supplies the charging device with electric current; and
a grounding electrode which contacts the intermediate transfer member, said grounding electrode being located so that a circuit from the resistance to the grounding electrode is in parallel with a circuit from the resistance to the toner image carrying member.

5,701,570
IMAGE FORMING APPARATUS EMPLOYING RESIDUAL TONER RECOVERY SCHEME
Yasuo Takuma, Hitachi, Japan, assignor to Hitachi, Ltd., and Hitachi Koki Co., Ltd., both of Tokyo, Japan
Filed Nov. 30, 1995, Ser. No. 565,348
Claims priority, application Japan, Dec. 13, 1994, 6-308642
Int. Cl.^{6} G03G *15/00;21/00*
U.S. Cl. 399—343 **14 Claims**

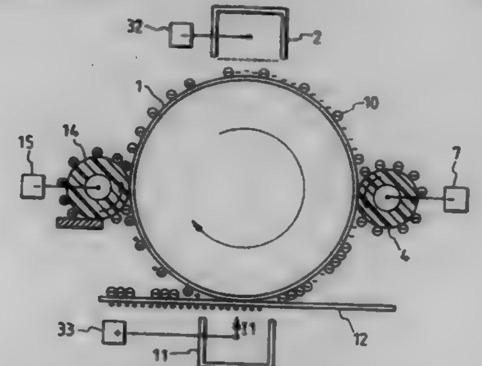

1. An image forming apparatus comprising:
a charger unit for uniformly charging a surface of an image bearing body;
an exposure unit for light-irradiating said charged surface of said image bearing body and for forming an electrostatic latent image thereon;
a developer unit having a development roller for supplying toners having a predetermined electric charge on said electrostatic latent image to form a visual toner image;
a transfer unit for transferring said visual toner image onto a recording medium; and
a cleaner unit for cleaning residual toners which have remained on said image bearing body after the transfer of said visual toner image to said recording medium,
said cleaner unit having means for reversing an electric charge polarity of said residual toners present on said image bearing body and means for reversing an electric charge polarity of recovered toners present in said cleaner unit.

5,701,571
ELECTROPHOTOGRAPHIC APPARATUS, PROCESS CARTRIDGE, AND IMAGE FORMING METHOD FEATURING A PHOTOSENSITIVE MEMBER HAVING A CONDUCTIVE SURFACE LAYER AND A CLEANING MEANS HAVING CONDUCTIVE PROPERTIES
Syoji Amamiya, Kawasaki; Akio Maruyama, and Yuichi Hashimoto, both of Tokyo, all of Japan, assignors to Canon Kabushiki Kaisha, Tokyo, Japan
Continuation of Ser. No. 301,561, Sep. 7, 1994, abandoned.
This application Oct. 8, 1996, Ser. No. 728,266
Claims priority, application Japan, Sep. 10, 1993, 5-225854
Int. Cl.^{6} G03G *21/00*
U.S. Cl. 399—343 **36 Claims**

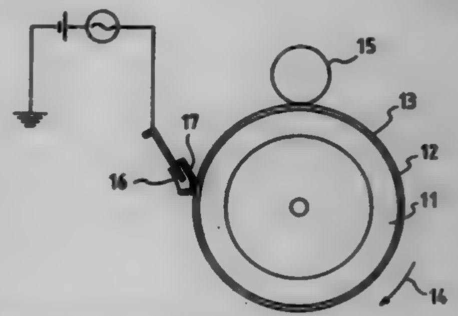

1. An electrophotographic apparatus, comprising:
an electrophotographic photosensitive member having a conductive surface layer; and
cleaning means for cleaning said electrophotographic photosensitive member and having a surface portion, with electroconductive particles dispersed therein, that contacts said electrophotographic photosensitive member.

5,701,572
CERAMIC COATED DETONING ROLL FOR XEROGRAPHIC CLEANERS
Thomas J. Behe, Webster; Daniel R. Gilmore, III, Victor, and Bruce E. Thayer, Webster, all of N.Y., assignors to Xerox Corporation, Stamford, Conn.
Filed Aug. 18, 1995, Ser. No. 517,024
Int. Cl.^{6} G03G *21/00*
U.S. Cl. 399—354 **18 Claims**

1. An apparatus for removing particles from an imaging surface, comprising:
means for removing particles from the imaging surface; and
means for detoning the particles from said removing means, said detoning means comprising a low electrically conductive sur-

face having an abbreviated electrical relaxation time constant, said low electrically conductive surface being ceramic.

5,701,573

IMAGE FORMING APPARATUS ADAPTED TO FEED CONTINUOUS ROLLED-SHEET PAPER BY CONTROLLING SLACK IN THE PAPER FOR THE ACCURATE CUTTING THEREOF

Katsuhiro Yoshiuchi; Hiroshi Kageyama, and Yoko Nishi, all of Osaka, Japan, assignors to Mita Industrial Co., Ltd., Japan

Filed Jul. 29, 1996, Ser. No. 688,279

Claims priority, application Japan, Jul. 31, 1995, 7-195512

Int. Cl.⁶ G03G *21/00*

U.S. Cl. 399—384 **9 Claims**

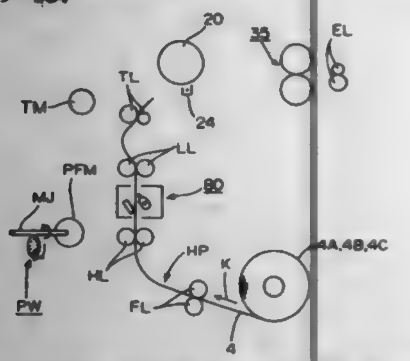

1. An image forming apparatus for forming an image on a sheet having a predetermined length cut from a strip-shaped continuous sheet, comprising:

image forming means for forming an image on a sheet;

a feeding roller for feeding a strip-shaped continuous sheet to the image forming means;

a pre-image-formation roller provided between the feeding roller and the image forming means;

cutting means, provided on an upstream side of the pre-image-formation-roller with respect to a direction of sheet conveyance, for cutting the strip-shaped continuous sheet;

pre-image-formation roller driving means for driving the pre-image-formation roller to rotate so that a sheet conveying speed of the pre-image-formation roller is equal to a predetermined speed;

feeding roller driving means for driving the feeding roller to rotate;

sheet feeding length detecting means for detecting a sheet feeding length by the feeding roller;

cutting controlling means for driving the cutting means in response to that the sheet feeding length detected by the sheet feeding length detecting means has reached a predetermined value;

a post-treatment roller provided on a downstream side of the image forming means with respect to the direction of sheet conveyance;

post-treatment roller driving means for driving the post-treatment roller to rotate so that a sheet conveying speed of the post-treatment roller is higher than the sheet conveying speed of the pre-image-formation roller; and

driving controlling means for controlling the feeding roller driving means so that a sheet conveying speed of the feeding roller is higher than the sheet conveying speed of the pre-image-formation roller during a predetermined time period after a leading end of the continuous sheet has reached the pre-image-formation roller, thereby providing slack in the sheet between the feeding roller and the pre-image-formation roller such that the slack absorbs tension exerted by the post-treatment roller to prevent the tension from affecting the rotation of the feeding roller,

wherein the feeding roller, the pre-image-formation roller and the post treatment roller are driven so that the slack is formed before the leading end of the sheet has reached the post-treatment roller.

5,701,574

METHOD OF PRODUCING A SLIDING SLEEVE FOR THE SYNCHRONIZER MEANS OF A CHANGE-SPEED GEAR

Karl Derflinger, Laakirchen; Herbert Schmid, Vorchdorf, and Johann Dickinger, Bad Wimsbach/N., all of Austria, assignors to Miba Sintermetall Aktiengesellschaft, Laakirchen, Austria

Filed Feb. 6, 1996, Ser. No. 597,293

Claims priority, application Austria, Feb. 16, 1995, 282/95

Int. Cl.⁶ B22F *3/16;3/17;5/08*

U.S. Cl. 419—26 **2 Claims**

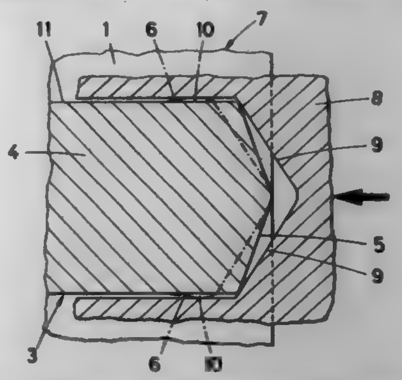

1. A method of producing a sliding sleeve for a synchronizer of a speed-changing gear, the sliding sleeve being comprised of a sintered powder metal compact having a claw extending along an inner periphery of the sleeve, and the claw consisting of teeth having opposite end faces and a cross-section between the end faces which is reduced relative to an undercut portion at at least one of the end faces, which method comprises the steps of

(a) sintering the powder metal compact having the claw consisting of the teeth having the opposite end faces and the reduced cross-section extending between the end faces, and

(b) then applying solely an axial upsetting force to the one end face to form the undercut portion thereat while leaving the reduced cross-section unchanged.

5,701,575

ARTICLE MADE OF A TI-AL INTERMETALLIC COMPOUND, AND METHOD FOR FABRICATION OF SAME

Kohei Taguchi; Michihiko Ayada, both of Kanagawa-ken, and Hideo Shingu, Kyotofu, all of Japan, assignors to NHK Spring Co., Ltd., Japan

Continuation of Ser. No. 148,438, Nov. 8, 1993, abandoned. This application Jan. 11, 1996, Ser. No. 575,969

Claims priority, application Japan, Nov. 9, 1992, 4-322226; May 13, 1993, 5-134180

Int. Cl.⁶ B22F *3/16*

U.S. Cl. 419—28 **24 Claims**

1. A method for fabricating an article essentially consisting of one or more of Ti—Al intermetallic compounds, comprising the steps of:

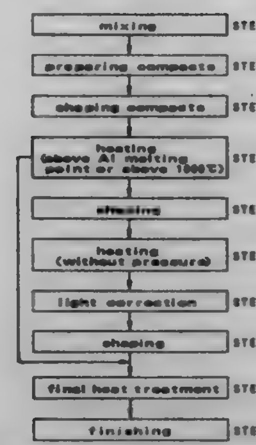

preparing a mixture of a first material in solid form and a second material in solid form, wherein each of said first material and said second material is selected from a group consisting of Ti, Ti alloys, Al, Al alloys, and Ti—Al compounds, such that said mixture has a composition suitable for forming a desired Ti—Al intermetallic compound;

heating said mixture to form a structure comprising a first phase and a second phase wherein said first phase is distributed like islands in a matrix of said second phase, a plurality of voids being embedded within said structure; and

conducting diffusion heat treatment to eliminate one or more of said voids such that after said diffusion heat treatment said structure has a volume ratio of said voids to the total volume of said structure ranging between 1.3% and 3.5%.

5,701,576

MANUFACTURING METHOD OF PLASTICALLY FORMED PRODUCT

Makoto Fujita, Higashihiroshima; Yukio Yamamoto, Hiroshima; Nobuo Sakate, Hiroshima, and Shoji Hirabara, Hiroshima, all of Japan, assignors to Mazda Motor Corporation, Hiroshima-ken, Japan

Continuation of Ser. No. 253,789, Jun. 3, 1994, abandoned. This application Jan. 22, 1996, Ser. No. 589,145

Claims priority, application Japan, Jun. 3, 1993, 5-157877; Sep. 16, 1993, 5-253701; Mar. 8, 1994, 6-036853

Int. Cl.⁶ B22F *1/00*

U.S. Cl. 419—29 **42 Claims**

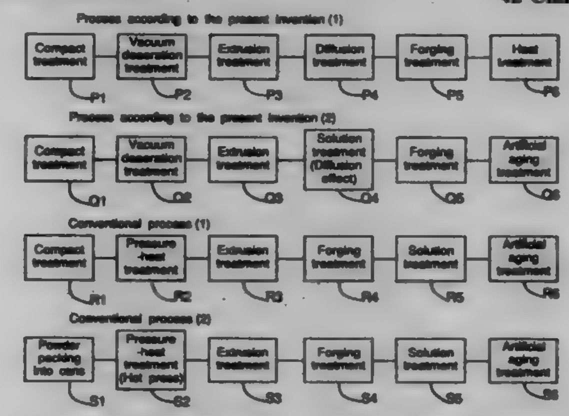

1. A method of manufacturing a plastically formed product by processing chips of waste metal, comprising the sequential steps of:

(a) processing a waste metal article to produce chips of metal,

(b) extruding said chips of metal to form an extruded material;

(c) carrying out a diffusion treatment on said extruded material after said extruding step is completed to produce self-diffusion of metallic atoms in said extruded material, and

(d) plastically working said extruded material to form said plastically formed product.

5,701,577

FORMING PROCESS UTILIZING LIQUID ABSORPTION BY LIQUID-ABSORBING SUBSTANCE, AND FORMED MATERIAL PRODUCED BY SAID PROCESS

Shinzo Hayashi, Nagoya, Japan, assignor to NGK Insulators, Ltd., Nagoya, Japan

Filed Jun. 5, 1995, Ser. No. 466,121

Claims priority, application Japan, Nov. 1, 1994, 6-268965

Int. Cl.⁶ B29C *39/00*

U.S. Cl. 428—546 **10 Claims**

1. A process for molding a ceramic or metal powder utilizing liquid absorption by a liquid-absorbing substance, said process comprising the steps of:

preparing a liquid mixture containing

at least one metal or ceramic powder dispersible in the liquid mixture,

a liquid capable of dispersing the at least one powder, and

a liquid-absorbing substance capable of absorbing the liquid by itself or when modified;

placing the liquid mixture in a mold; and

allowing the liquid-absorbing substance to absorb the liquid to obtain a molded material.

5,701,578

METHOD FOR MAKING A DIAMOND-COATED MEMBER

Yixiong Liu, Latrobe, Pa., assignor to Kennametal Inc., Latrobe, Pa.

Filed Nov. 20, 1996, Ser. No. 752,097

Int. Cl.⁶ B22F *7/08*

U.S. Cl. 428—565 **18 Claims**

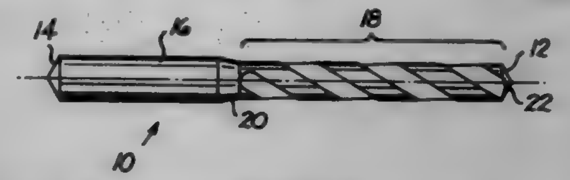

16. A diamond-coated elongate member comprising:

a tungsten carbide-based cemented carbide substrate subjected to a residual stress reduction treatment;

the substrate having a surface roughness of at least 25 micro-inches, R_a;

an adherent diamond coating on the surface of the substrate; and

the run-out of the substrate being at least 40 percent less than the run-out of an identical substrate not subjected to the residual stress reduction treatment.

5,701,579

MODULAR ANTENNA DRIVER INCLUDING REMOVABLE MODULES EACH CHARACTERISTIC OF A HANDSET TYPE

John M. Dolan, Woodbury, N.Y., and Andrew S. Beasley, Lake Errock, Canada, assignors to PCS Solutions, LLC, Englewood Cliffs, N.J.

Filed Nov. 29, 1993, Ser. No. 158,256

Int. Cl.⁶ H04Q *7/30*

U.S. Cl. 455—3.1 **11 Claims**

1. A modular antenna driver for extending the area of coverage between a base station connected to a signal conduit system and a plurality of cordless handsets, said driver comprising:

a duplex circuit connectable to said signal conduit and including a circuit tuned for downstream and upstream communications with said base station over said signal conduit;

a core circuit connected to said duplex circuit and including circuitry interconnected to perform and of sufficient bandwidth to perform communication functions common to at least two different handset types;

at least one removable module selectively insertable into said driver and including circuitry interconnected to perform com-

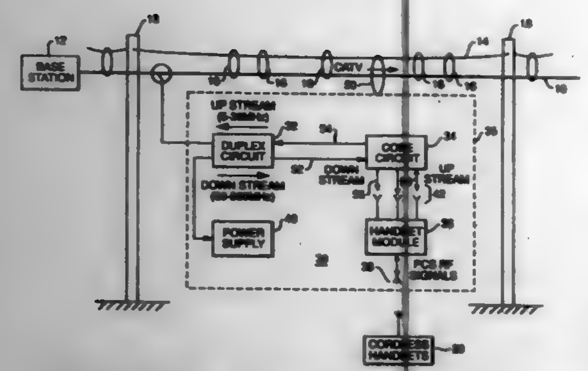

munication functions characteristic of one handset type in cooperation with the core circuit, wherein said at least one module may be replaced by a second module for a different, second handset type;

contacts connected to said core circuit and adapted to removably receive one of said modules; and,

additional contacts connected to said core circuit and adapted to removably receive at least one additional removable module which is selectively insertable into said driver simultaneously with said first module and which includes circuitry interconnected to perform communication functions characteristic of said second handset type.

5,701,580

INFORMATION PROVIDING SYSTEMS AND PORTABLE ELECTRONIC DEVICES

Kazuyasu Yamane, Hamura, and Takashi Orimoto, Akiruno, both of Japan, assignors to Casio Computer Co., Ltd., Tokyo, Japan

Filed Dec. 1, 1995, Ser. No. 565,781

Claims priority, application Japan, Dec. 9, 1994, 6-306033; Sep. 22, 1995, 7-244689

Int. Cl.^{6} H04Q *7/00*

U.S. Cl. 455—3.1 **22 Claims**

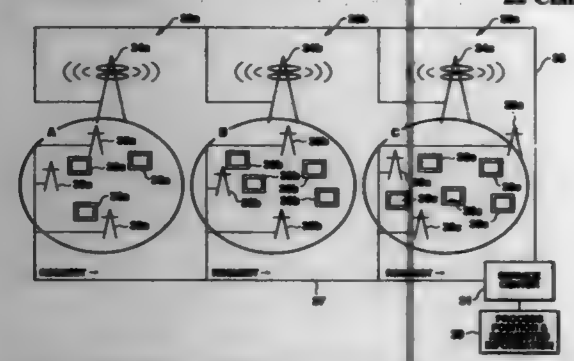

1. An information providing system using a radio network, comprising:

a service center including:

means for providing respective outline items of information in a first transmission and respective detail items of information in a second transmission; and

means for attaching to each of said outline items of information and each of said detail items a corresponding key code; and

at least one terminal including:

selection means for enabling a user to select a desired outline item of information from among the outline items of information provided in the first transmission;

storage means for storing the key code attached to the outline item of information selected by the selection means;

comparison means for comparing the key code stored in said storage means with a respective one of the key codes attached to the detail items of information provided in the second transmission; and

reception means for accepting the detail item of information whose compared key code is found to match with the key code stored in said storage means.

5,701,581

METHOD FOR BIDIRECTIONALLY TRANSMITTING DIGITAL VIDEO SIGNAL AND DIGITAL VIDEO SIGNAL BIDIRECTIONAL TRANSMISSION SYSTEM

Yoshizumi Eto, Sagamihara; Nobuo Murata, Musashino; Kazuhiro Tanabe, Tachikawa, and Hiroyuki Nisikawa, Kamifukuoka, all of Japan, assignors to Hitachi Denshi Kabushiki Kaisha, Tokyo, Japan

Filed Dec. 23, 1994, Ser. No. 361,724

Claims priority, application Japan, Dec. 28, 1993, 5-352868; May 27, 1994, 6-115243; May 27, 1994, 6-115244; Sep. 9, 1994, 6-215466

Int. Cl.^{6} H04H *1/00;* **H04Q** *11/04;* **H04N** *7/14;7/18*

U.S. Cl. 455—5.1 **14 Claims**

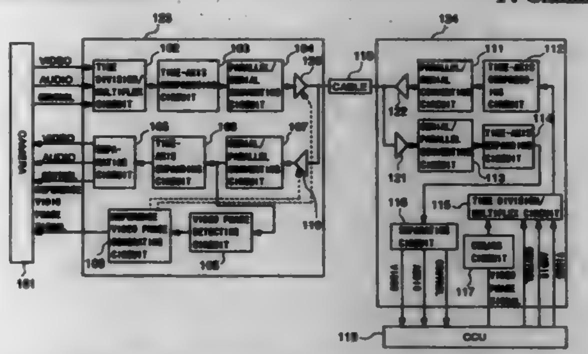

1. A video signal transmission method wherein digital signals including at least digital video signals are bidirectionally transmitted and received in substantially real time between first and second video appliances coupled via a transmission path, said first and second video appliances each including a transmitting and receiving apparatus, said method comprising the steps of:

dividing a first digital signal of said first video appliance into a plurality of predetermined periods, and time-axis compressing said first divided signal to produce a first divided and compressed digital signal repeating a signal period and a no signal period alternately, said first divided and compressed signal being transmitted on said transmission path;

controlling said transmitting and receiving apparatus of said first video appliance to generate a first transmission period and a second transmission period alternately on said transmission path, said first transmission period being longer than said second transmission period, so that said first divided and compressed digital signal of said first video appliance is transmitted to said second video appliance in said first transmission period of said transmission path;

receiving said first divided and compressed digital signal from said first video appliance at said second video appliance; and

time-axis expanding said first divided and compressed digital signal to reproduce said first digital signal at said second video appliance;

wherein the period of said first divided and compressed digital signal is synchronized with that of said first transmission period; and

wherein when each of said predetermined periods into which said first digital signal is divided is Tf, said first transmission period is a period defined by one of the following equations:

(a) $Tf=n\times Tn$,

(b) $Tf=n\times Tn+m\times Tm$,

(c) $Tf=n\times Tn+m\times Tm+k\times Tk$, and

(d) $Tf=\Sigma(ni\times Ti)$,

where symbols Tn, Tm, Tk, Ti denote said first transmission period, and symbols n, m, k, ni, i represent positive integers other than 0.

5,701,582

METHOD AND APPARATUS FOR EFFICIENT TRANSMISSIONS OF PROGRAMS

Henry C. DeBey, Bougival, France, assignor to Delta Beta Pty. Ltd., West Perth, Australia

Continuation-in-part of Ser. No. 173,865, Dec. 23, 1993, Pat. No. 5,421,031, which is a continuation of Ser. No. 835,947, Apr. 2, 1992, abandoned. This application Mar. 22, 1995, Ser. No. 408,446

Claims priority, application Australia, Aug. 23, 1989, PJ5933

Int. Cl.^{6} H04Q *3/54;* **G06F** *3/14;9/44*

U.S. Cl. 455—5.1 **37 Claims**

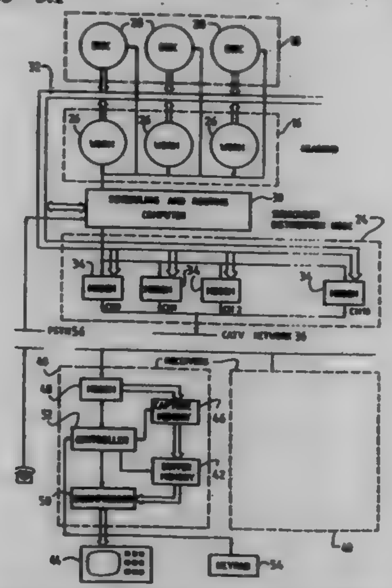

1. A method of transmitting a program to multiple users over a distribution system, the method comprising:

at a head end of the distribution system, providing a program divided into a plurality of segments; and

transmitting the segments from the head end to users' receivers such that, at least some of the segments are transmitted more than once, at different times, from the head end so as to enable multiple receivers of users requesting playback of the program at different times to simultaneously receive the segments required for continuous playback of the program.

5,701,583

LAND-BASED WIRELESS COMMUNICATIONS SYSTEM HAVING A SCANNED DIRECTIONAL ANTENNA

Steven Anthony Harbin, Grover, Md., and Brian Keith Rainer, Chesterfield, Mass., assignors to Southwestern Bell Technology Resources, Inc., Austin, Tex.

Continuation of Ser. No. 977,635, Nov. 17, 1992, Pat. No. 5,488,737. This application May 25, 1995, Ser. No. 450,403

Int. Cl.^{6} H04B *7/14*

U.S. Cl. 455—25 **42 Claims**

1. A radio communications system comprising:

a plurality of base stations for transmitting and receiving signals to and from one or more remote stations, said one or more remote stations being within a near line-of-sight of at least one of said plurality of base stations, each of said plurality of base stations comprising at least one receive antenna coupled to a base station receiver, said at least one receive antenna having a directional pattern in a horizontal plane and means for steering said directional pattern to sequentially scan from one azimuthal position to another azimuthal position;

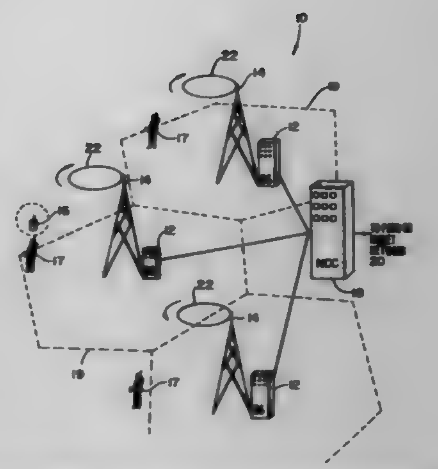

means for filtering a signal received at said at least one receive antenna;

means for processing said received signal after filtering by said filtering means;

means for detecting a signal strength of said received signal; and

means for controlling said steering means, said controlling means comprising means for instructing said steering means to stop, and without further scanning, instructing said at least one receive antenna to receive said received signal at an azimuthal position where said detecting means detects said signal strength of said received signal to be is above a predetermined threshold value.

5,701,584

CELLULAR MOBILE RADIO SYSTEM HAVING A FREQUENCY REUSE PLAN WITH PARTIALLY IDENTICAL PATTERNS

Pierre Dupuy, Paris, France, assignor to Alcatel Mobile Communication France, Paris, France

Filed Mar. 6, 1995, Ser. No. 399,034

Claims priority, application France, Mar. 8, 1994, 94 02661

Int. Cl.^{6} H04B *7/00*

U.S. Cl. 455—33.1 **14 Claims**

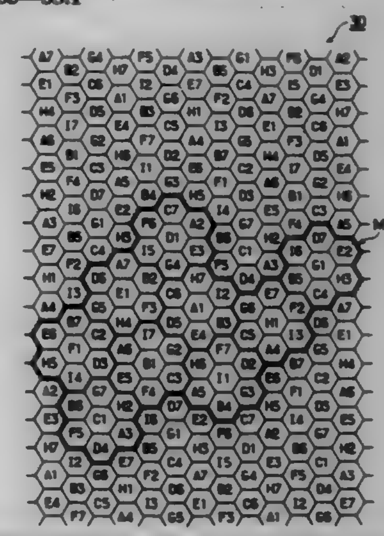

1. A cellular mobile radio system comprising a plurality of cells grouped into identical patterns, each of at least two cells, repeated periodically in space and such that:

each of a plurality of base tranceiver means is associated with only one of said cells and is adapted to send radio signals to and to receive radio signals from mobile stations when the mobile stations are located in a geographical area substantially coincident with the cell associated therewith;

each of said base transceiver means sends and receives radio signals using a set of frequencies associated with said associ-

ated cell and including at least two different frequencies, all the frequencies of sets of frequencies associated with cells of the same pattern being different;

the frequency of the radio signals exchanged between a mobile station and the transceiver means of a cell changes in time so that several frequencies of the set of frequencies associated with said cell are used successively during the transmission of said radio signals;

like cells being any two cells that respectively occupy in different ones of said identical patterns the same position relative to other cells within respective ones of said identical patterns, the sets of frequencies associated with any two like cells include at least one identical frequency and at least one different frequency;

in which system a plan of said mobile radio system is obtained by superposing plans of a plurality of mobile radio systems each having a different number of cells per pattern, these mobile radio systems being systems in which the sets of frequencies associated with like cells are identical.

5,701,585

MOBILE ASSISTED HANDOFF

Harald Kallin, Sollentuna, and Anna Fallgren, Stockholm, both of Sweden, assignors to Telefonaktiebolaget LM Ericsson, Stockholm, Sweden

Filed Dec. 12, 1994, Ser. No. 354,779

Int. Cl.⁶ H04Q *7/20*

U.S. Cl. 455—33.2 **25 Claims**

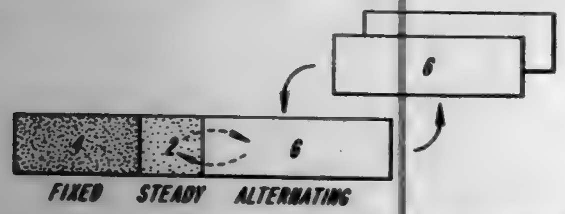

1. A method of mobile assisted handoff in a cellular communication system comprising a plurality of mobile stations and a land system and a plurality of cells, comprising the steps of:

assigning a mobile station a list of cells to measure, wherein said list is divided into two sections, a steady section and an alternating section;

measuring quality level of each assigned cell;

reporting said quality levels to said land system;

transferring a cell from the alternating section of the list to the steady section of the list when said cell has a quality level higher than one of the cells in the steady section, wherein the cell with the lowest quality level in the steady section is transferred to said alternating section; and

changing said cells listed in said alternating section every predetermined period of time.

5,701,586

CELL SELECTION AND RESELECTION BY MOBILE STATION IN A MULTILAYER CELLULAR MOBILE RADIO NETWORK

Sami Tabbane, Paris, and Christophe Moreau, Chatillon, both of France, assignors to France Telecom, Paris, France

Filed Jul. 12, 1995, Ser. No. 501,490

Claims priority, application France, Jul. 13, 1994, 94 08834

Int. Cl.⁶ H04Q *7/00;9/00*

U.S. Cl. 455—33.4 **15 Claims**

1. A method of cell selection and reselection by a mobile station in a multilayer cellular mobile radio network in which each layer includes a plurality of cells and said cells comprise base stations respectively, in which method, when said mobile station is in a standby state and after selection of a cell as a selected cell by said mobile station, the following steps are executed:

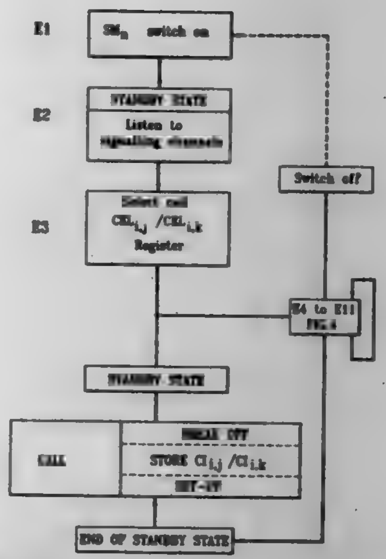

identifying a layer containing said selected cell to thereby define an identified layer,

reselecting cells included in said identified layer during a predetermined time-delay associated with said selected cell to thereby define reselected cells,

cumulatively counting a number of said reselected cells which are reselected in said identified layer during said predetermined time-delay,

comparing said number of said reselected cells with a first predetermined threshold associated with said selected cell and a second predetermined threshold associated with said selected cell and lower than said first predetermined threshold,

repeating the reselecting, cumulative counting and comparing steps if said number of said reselected cells lies between said first predetermined threshold and second predetermined threshold,

changing said identified layer to a first selected layer of said multilayer cellular mobile radio network having cells covering the cells of said identified layer if said number of said reselected cells is above said first predetermined threshold and to a second selected layer of said multilayer cellular mobile radio network having cells covered by the cells of said identified layer if said number of said reselected cells is below said second predetermined threshold, and

selecting a cell included in one of said first selected layer and second selected layer as another selected cell, thereby repeating the previous steps from said layer identifying step.

5,701,587

RADIO CALLING METHOD AND APPARATUS FOR REMOVING NEAR-FAR PROBLEM

Hae-Sug Kim, Suwon, Rep. of Korea, assignor to Samsung Electronics Co., Ltd., Suwon, Rep. of Korea

Filed Jun. 17, 1996, Ser. No. 668,070

Claims priority, application Rep. of Korea, Jun. 17, 1995, 16183/1995

Int. Cl.⁶ H04Q *7/38*

U.S. Cl. 455—34.1 **5 Claims**

1. A radio calling method for removing a near-far problem in a radio switching system which groups a plurality of cordless fixed parts distributed in various areas at least first and second groups and controls communication of the groups with a cordless portable part, which is comprised of the steps of:

(a) when a cordless portable part disposed between a first group and a second group attempts an outgoing call, scanning a channel by the cordless fixed part belonging to each group for the purpose of finding the channel where the cordless portable part has attempted to transmit the outgoing call;

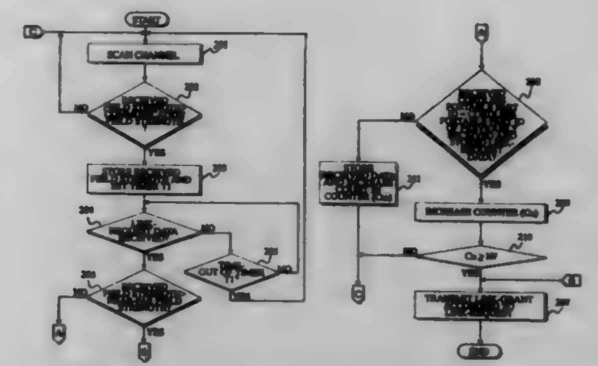

(b) fixing the frequency of the cordless fixed parts at that channel and comparing a received field strength with a predetermined communication field strength;

(c) when the received field strength is more than the communication field strength, storing the received field strength and determining whether or not link-request data has been received during a given period of time;

(d) when the link-request data has been received during the given period of time, determining whether or not the received field strength is more than a predetermined near-far field strength and, when the received field strength is more than the near-far field strength, transmitting a link-grant to the cordless portable part which has attempted the outgoing call; and

(e) when the received field strength is less than the near-far field strength, comparing a received cordless portable part ID with a cordless portable part ID of link-request data which has been previously received and stored in memory, and increasing count in a corresponding counter when the received cordless portable part ID is equal to the cordless portable part ID of the link-request data, and comparing the increased count in the counter with a predetermined count, and transmitting a link-grant to the cordless portable part which has attempted the outgoing call, when the increased count in the counter is more than the predetermined count.

5,701,588

PICTORIAL DISPLAY APPARATUS FOR RECEIVERS FOR IMPLEMENTING THE PICTORIAL DISPLAY

Kazuo Morita, and Motoki Ide, both of Tokyo, Japan, assignors to NEC Corporation, Tokyo, Japan

Filed Nov. 29, 1994, Ser. No. 350,983

Claims priority, application Japan, Nov. 30, 1993, 5-299978

Int. Cl.⁶ H04Q *7/14*

U.S. Cl. 455—38.4 **11 Claims**

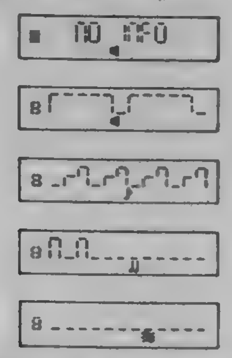

8. A method for controlling the display pattern of a display for indicating a selected informing mechanism, the method comprising the steps of:

selecting one of a plurality of informing mechanisms for informing a user of a reception of a call signal, some of said informing mechanisms producing a sound pattern to inform said user of said reception of said call signal; and

displaying a waveform sound pattern visually expressing the sound pattern generated by said selected informing mechanism.

5,701,589

METHOD FOR ADJUSTING REFERENCE FREQUENCIES IN A COMMUNICATION SYSTEM

Steven G. Lee, Elgin; Brian D. Iehl, Hoffman Estates; Omeron Manya, Palatine; Michael J. Schellinger, Vernon Hills, and Robert F. D'Avello, Lake Zurich, all of Ill., assignors to Motorola, Inc., Schaumburg, Ill.

Filed May 20, 1994, Ser. No. 246,650

Int. Cl.⁶ H04Q *7/20*

U.S. Cl. 455—56.1 **19 Claims**

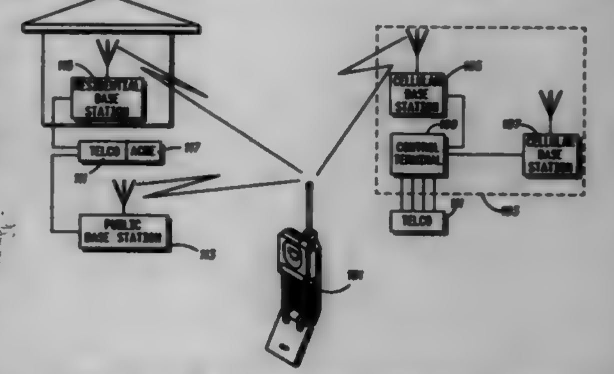

1. A method for adjusting reference frequencies in a communication system, the communication system comprising a portable station, a residential base station, and a public base station which generates a first reference frequency, the method comprising the steps of:

(a) adjusting a second reference frequency in the portable station based upon the first reference frequency; and

(b) adjusting a third reference frequency of the residential base station based upon the second reference frequency.

5,701,590

RADIO COMMUNICATION SYSTEM FOR PERFORMING MULTI-CHANNEL ACCESS

Satoshi Fujinami, Tokyo, Japan, assignor to NEC Corporation, Tokyo, Japan

Filed Jul. 10, 1995, Ser. No. 500,134

Claims priority, application Japan, Jul. 8, 1994, 6-157280

Int. Cl.⁶ H04B *1/10;15/00;17/00*

U.S. Cl. 455—62 **12 Claims**

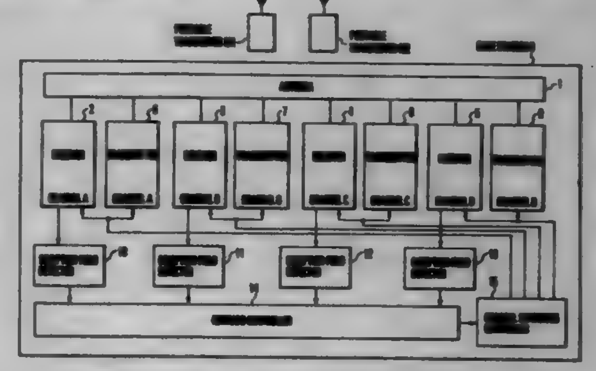

1. A radio communication system comprising a plurality of mobile stations and a base station for selecting a plurality of radio channels whose frequencies are different from each other to perform radio communication with said mobile stations,

wherein said base station comprises:

a plurality of pairs of receivers and transmitters, arranged in correspondence with said radio channels, for performing radio communication with said mobile stations;
a plurality of reception field detection means for detecting that field levels of received signals output from said receivers are higher than a predetermined level;
control means for issuing an instruction to switch a busy radio channel when detection outputs which are larger in number than channels used in the base station are simultaneously generated by said reception field detection means; and
channel switching means for selecting one pair from said pairs of idle receivers and idle transmitters on the basis of the instruction from said control means to switch at least one of said busy radio channels, thereby continuing communication.

5,701,591
MULTI-FUNCTION INTERACTIVE COMMUNICATIONS SYSTEM WITH CIRCULARLY/ELLIPTICALLY POLARIZED SIGNAL TRANSMISSION AND RECEPTION
Thomas T. Y. Wong, Skokie, Ill., assignor to Telecommunications Equipment Corporation, Palatine, Ill.
Filed Apr. 7, 1995, Ser. No. 420,372
Int. Cl.[6] H04B *17/02*
U.S. Cl. 455—63 **15 Claims**

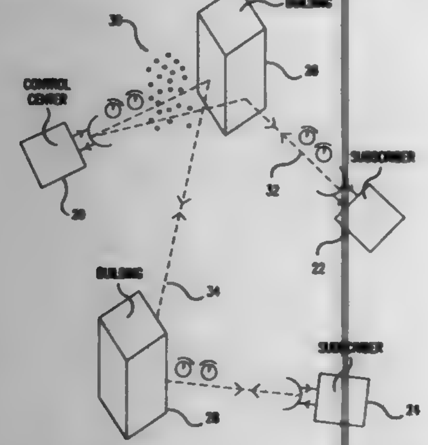

1. A method for communications with electromagnetic waves comprising the steps of:
transmitting a first rotating wave and a second rotating wave simultaneously, wherein said second rotating wave rotates counter to said first rotating wave;
receiving said first rotating wave and said second rotating wave, wherein components of said first rotating wave and components of said second rotating wave enter a first channel and a second channel;
isolating at least one of said first rotating wave and said second rotating wave from at least one of said first channel and said second channel;
and dividing said first channel into a first channel primary path and a first channel secondary path, dividing said second channel into a second channel primary path and a second channel secondary path, shifting and combining a first phase of said first channel secondary path with said second channel primary path, and shifting and combining a second phase of said second channel secondary path with said first channel primary path.

5,701,592
METHOD AND SYSTEM FOR DESYNCHRONIZING OVERHEAD MESSAGES IN A RADIOCOMMUNICATION SYSTEM
Harald Kallin, Sollentuna, and Roland Bodin, Spånga, both of Sweden, assignors to Telefonaktiebolaget LM Ericsson, Stockholm, Sweden
Filed Dec. 19, 1994, Ser. No. 358,316
Int. Cl.[6] H04B *7/26*
U.S. Cl. 455—69 **23 Claims**

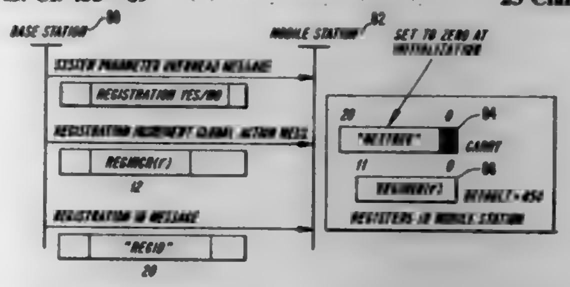

13. A system comprising:
a transmitter for periodically transmitting supervisory messages on a control channel, wherein first and second streams of supervisory messages are transmitted in an interleaved fashion on said control channel;
a receiver for receiving registration messages; and
a processor for providing said first and second streams of supervisory messages, wherein each stream includes substantially the same information, and wherein corresponding messages in said first stream which result in said registration messages are offset from messages in said second stream which result in said registration messages.

5,701,593
METHOD AND MEANS FOR THE TRANSMITTER-SIDE CONTROLLER OPERATION OF A RECEIVER-SIDE DEVICE
Achim Storz, Triberg, and Norbert Eigeldinger, Villingen, both of Germany, assignors to Deutsche Thomson-Brandt GmbH, Villingen-Schwenningen, Germany
Continuation of Ser. No. 836,308, Apr. 24, 1992, abandoned. This application May 2, 1995, Ser. No. 491,684
Claims priority, application Germany, Aug. 25, 1989, 3928188.4
Int. Cl.[6] H04B *1/00*
U.S. Cl. 455—70 **15 Claims**

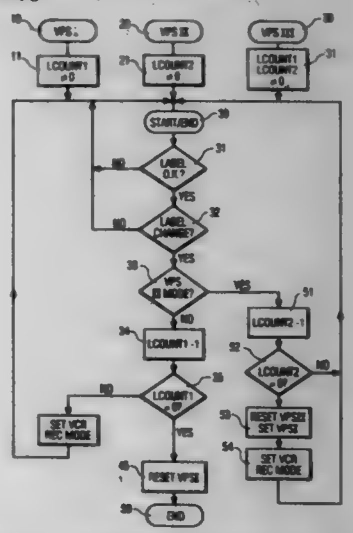

1. A method for controlling the operation of a device on the receiver side in a predetermined operating mode by means of characteristic signals provided by broadcasts comprising the steps of:

transmitting the characteristic signals assigned to the broadcasts during the entire duration of the respective broadcasts, different broadcasts having different characteristic signals,
comparing of the characteristic signals successively, with each other and/or with a first characteristic signal,
counting the number of characteristic signals which are different from each other according to said step of comparing, determining the subsequent characteristic signal for which a predetermined number of changes of characteristic signals is reached in response to said counting and comparing steps, and
storing and operating upon data contained in the subsequent characteristic signal.

5,701,594
TRANSMITTER/RECEIVER FOR A TDMA SYSTEM USING COMMON IF SAW FILTER
Gareth John Richard Bath, Winchester, and Steven Richard Ring, Bracknell, both of England, assignors to Nokia Mobile Phones Limited, Espoo, Finland
Filed Nov. 10, 1993, Ser. No. 150,464
Claims priority, application United Kingdom, Nov. 11, 1992, 09223621
Int. Cl.[6] H04B *1/44*
U.S. Cl. 455—78 **9 Claims**

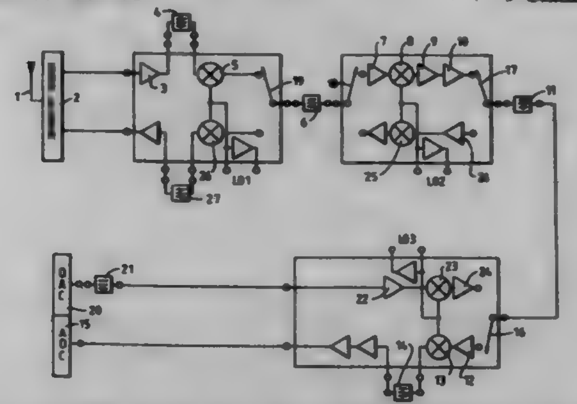

1. A radio frequency circuit for a transmitter/receiver in a time division multiple access system, the circuit comprising:
a transmit channel including a heterodyne transmitter,
a receiver channel including a heterodyne receiver,
a bidirectional intermediate frequency SAW filter shared by the transmit and receive channels, and
means responsive to whether the circuit is transmitting or receiving to switch the intermediate frequency SAW filter to the transmit or receive channel, wherein there is a first receiving stage/final transmitting stage which has a local oscillator automatically switchable on transmit/receive to change frequency so that the first receive intermediate frequency and final transmit intermediate frequency are the same.

5,701,595
HALF DUPLEX RF TRANSCEIVER HAVING LOW TRANSMIT PATH SIGNAL LOSS
Donald R. Green, Jr., San Marcos, Calif., assignor to Nippondenso Co., Ltd., Kariya, Japan
Filed May 4, 1995, Ser. No. 434,763
Int. Cl.[6] H04B *1/44*
U.S. Cl. 455—83 **18 Claims**

10. A transceiver comprising:
an antenna providing an antenna signal;
a transmitter, including a power amplifier generating a transmit signal;
a receiver; and
circulation unit means having a transmit port connected to said transmitter an antenna port connected to said antenna, and a receiver port connected to said receiver, for providing said

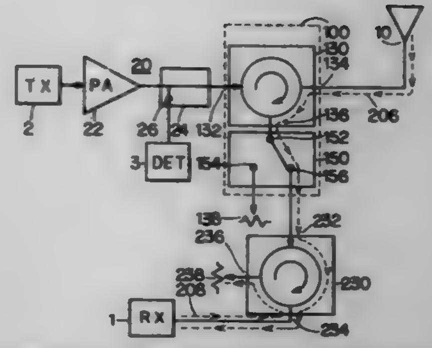

transmit signal to said antenna, and for selectively connecting said antenna to said receiver and to an impedance matching load connected to said circulation unit means, said circulation unit means including a first switch section and a second switch section;
wherein said first switch section receives said antenna signal and selectively connects said antenna to said impedance matching load and to said second switch section; and
said second switch section selectively connects said receiver to said first switch section and to a diversity reception antenna providing a diversity antenna signal.

5,701,596
MODULAR INTERCONNECT MATRIX FOR MATRIX CONNECTION OF A PLURALITY OF ANTENNAS WITH A PLURALITY OF RADIO CHANNEL UNITS
Sheldon Kent Meredith, and Walter Brian Steele, both of Phoenix, Ariz., assignors to Radio Frequency Systems, Inc., Marlboro, N.J.
Filed Dec. 1, 1994, Ser. No. 348,045
Int. Cl.[6] H04B *7/24*
U.S. Cl. 455—103 **27 Claims**

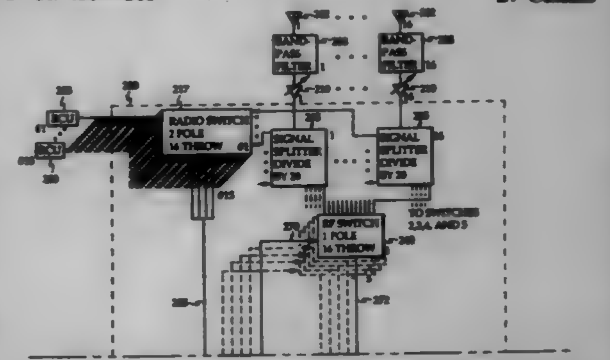

1. A modular interconnect matrix for matrix connection of a first plurality of antennas with a second plurality of radio channel units, wherein the antennas and the radio channel units transmit and receive RF signals at assigned operating frequencies, comprising:
a third plurality of first switching modules, each having at least one first switching connector and a plurality of second switching connectors, each first switching module being connected by its first switching connector to a corresponding radio channel unit;
first switching means in each one of said first switching modules for connecting each one of said first switching connectors with any one of said second switching connectors;
a fourth plurality of antenna interface modules, each having a first interface connector and a plurality of second interface connectors, each antenna interface module being connected by its first interface connector to a corresponding antenna;
wherein said second switching connectors are dimensioned for interconnection with said second interface connectors;
wherein said second switching connectors and said second interface connectors are arranged on the respective first switching modules and antenna interface modules for interconnection of at least one of said second switching connectors on each of

said first switching modules with at least one of said second interface connectors on each of said antenna interface modules;
wherein each radio channel unit is assigned to one group of a plurality of groups;
a plurality of second switching modules each having a first control connector and a plurality of second control connectors, said second control connectors being dimensioned for interconnection with said interface connectors, and said second control connectors and said second interface connectors being arranged on said second switching modules and said antenna interface modules for interconnection of at least one of said second control connectors on said second switching modules, with at least one of said second interface connectors on each of said antenna interface modules, a respective one of said second switching modules being assigned to a respective one of said groups;
second switching means in each of said second switching modules for connecting each first control connector with any one of said second control connectors; and
a plurality of switch control means, each assigned to a respective one of said groups, for controlling said first and second switching means, each said switch control means including:
a respective frequency control means for sequentially providing frequency control signals each indicative of the operating frequencies of the radio channel units in said respective one of said groups;
a respective scanning receiver means connected to said first control connector of said respective one of said second switching modules, said scanning receiver means being responsive to said frequency control signals and to RF signals received by the antennas for providing signal strength signals indicative of the signal strength of said RF signals at the operating frequencies of the radio channel units in said respective one of said groups; and
a respective controller responsive to said signal strength signals for determining the antenna having the strongest signal strength of the received RF signals at the operating frequency of each radio channel unit in said respective one of said group.

5,701,597

PORTABLE ELECTRONIC DEVICE AND METHOD FOR SUPPLYING CURRENT TO DIFFERENT LOADS

Eiichi Nakanishi, and Tetsuo Onodera, both of Tokyo, Japan, assignors to Oki Electric Industry Co., Ltd., Tokyo, Japan

Filed May 9, 1995, Ser. No. 436,921

Claims priority, application Japan, May 12, 1994, 6-098389

Int. Cl.⁶ H02J *7/34;* **H04B** *1/38*

U.S. Cl. 455—127 **53 Claims**

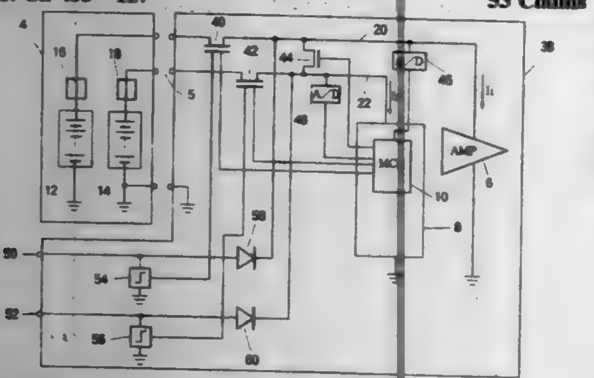

1. A portable electronic device comprising:
a first load;
a second load;
a first battery;
a second battery;
a first power line coupled to said first load;
a second power line coupled to said second load;
a first switch for coupling said first battery to said first power line responsive to states of discharge of said first battery and said second battery;
a second switch for coupling said second battery to said second power line responsive to said states of discharge of said first battery and said second battery;
a third switch for coupling said first power line to said second power line responsive to said states of discharge of said first battery and said second battery;
wherein said second load comprises a controller for controlling said first switch, said second switch, and said third switch responsive to states of discharge of said first battery and said second battery.

5,701,598

SCANNING RECEIVER WITH DIRECT DIGITAL FREQUENCY SYNTHESIS AND DIGITAL SIGNAL PROCESSING

Noel D. Atkinson, 4710 Ingleside La., Indianapolis, Ind. 46227

Continuation-in-part of Ser. No. 972,855, Nov. 6, 1992, Pat. No. 5,471,661, which is a division of Ser. No. 583,040, Sep. 14, 1990, Pat. No. 5,212,817. This application Jun. 7, 1995, Ser. No. 482,836

Int. Cl.⁶ H04B *1/18*

U.S. Cl. 455—161.2 **15 Claims**

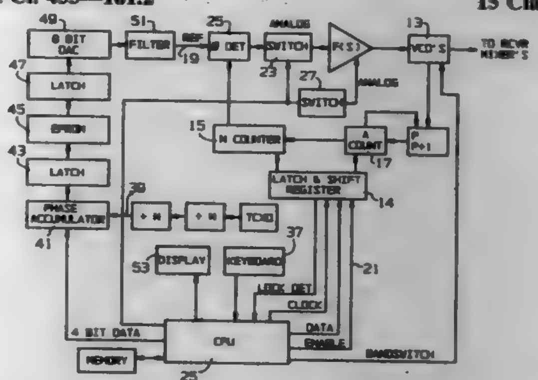

1. In a high speed scanning radio receiver having a signal processing path including an RF amplifier, a mixer receiving signals from the RF amplifier, a frequency synthesizer for generating a local oscillator signal to be supplied to the mixer, an IF amplifier receiving signals from the mixer, modulated signal filters, a demodulator for demodulating signals from the IF amplifier, demodulated signal filters receiving signals from the demodulator, and an audio output stage receiving signals from the demodulated signal filters, the improvement wherein the frequency synthesizer is a direct digital frequency synthesizer and includes:
timing means for providing clock signals;
a phase accumulator including a full adder, a latch and a digital tuning word input;
memory means for storing digital representations of periodic waveforms, the phase accumulator being responsive to the timing means and a particular digital tuning word input to address a digital representation of a particular periodic waveform;
digital to analog converter for converting an addressed digital representation to an analog periodic waveform; and
anti-aliasing filter for suppressing spurious energy in the analog periodic waveform.

5,701,599

BROADCAST RECEIVING APPARATUS HAVING SELECTION FUNCTION OF GOOD RECEPTION CONDITION IN DESIGNATED PROGRAM ITEM

Fumikazu Aihara, Kita-machi, Japan, assignor to Casio Computer Co., Ltd., Tokyo, Japan

Filed Jul. 23, 1992, Ser. No. 917,599

Claims priority, application Japan, Jul. 30, 1991, 3-214324; Sep. 25, 1991, 3-274707; Sep. 25, 1991, 3-274713; Oct. 17, 1991, 3-298104

Int. Cl.⁶ H04B *1/16*

U.S. Cl. 455—186.1 **4 Claims**

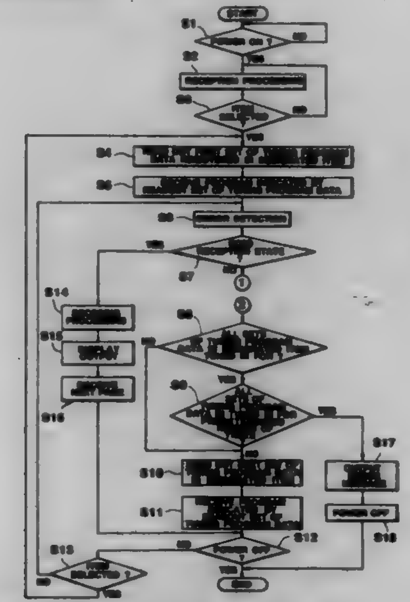

1. A broadcast receiving apparatus comprising:
reception means for receiving broadcast waves;
first storage means for storing as received data broadcasting signals received by said reception means;
display means for displaying the received data stored in said first storing means;
first designating means for, prior to reception of the broadcasting signals, designating a plurality of items indicative of types of broadcasting programs, and designating a plurality of selection programs indicative of broadcasting channels corresponding to the types of designated broadcasting programs;
second storing means for storing a plurality of program selection data corresponding to an association between broadcasting channel data indicative of broadcasting channels and broadcasting program data indicative of broadcasting programs, in accordance with designations made by said first designating means;
second designating means for designating one of the plurality of program selection data stored in said second storing means in accordance with a user's designation;
reception control means for controlling said reception means to read one of the plurality of program selection data when designated in accordance with the designation operation by said second designating means, and to receive broadcasting signals of one broadcast program specified by broadcasting channel data and broadcast program data included in said one program selection data;
reception condition detecting means for detecting whether or not a reception condition of the broadcasting signal of said one broadcast program received and controlled by said reception means is acceptable;
first control means for, when said reception condition detecting means detects that said reception condition of the broadcasting signal of said one broadcast program is acceptable, controlling said first storage means to store the broadcasting signal of the broadcast program as the received data, and for controlling said display means to display the received data; and
second control means for, when said reception condition detecting means detects that said reception condition of broadcasting signal of said one broadcast program is not acceptable, controlling said reception means to read the other program selection data of the plurality of program selection data included in the same item, instead of controlling said second storing means to store the broadcasting waves of the broadcast program as received data, said second control means controlling said reception means to receive broadcasting waves of the other one broadcast program specified by broadcasting channel data and broadcast program data included in the other program selection data, controlling said reception condition detecting means to detect whether or not a reception condition of the broadcasting waves of the other one broadcast program received by said reception means is acceptable, and controlling said reception means to repeat reading of the other one program selection data and receiving the broadcasting signal of the other one broadcast program specified by broadcasting channel data and broadcast program data included in the other one program selection data until said reception condition of broadcasting waves of the other one broadcast program received by said reception means is detected to be acceptable.

5,701,600

RADIO RECEIVER AND METHOD OF CALIBRATING SAME

John Wetters, Coral Springs; John Wayne Simmons, Tamarac; Virgilio Alejandro Fernandez, Sunrise; Art Ahrens, and Steve Carsello, both of Boynton Beach, all of Fla., assignors to Motorola, Inc., Schaumburg, Ill.

Filed Jul. 17, 1995, Ser. No. 502,997

Int. Cl.⁶ H04B *1/16*

U.S. Cl. 455—208 **15 Claims**

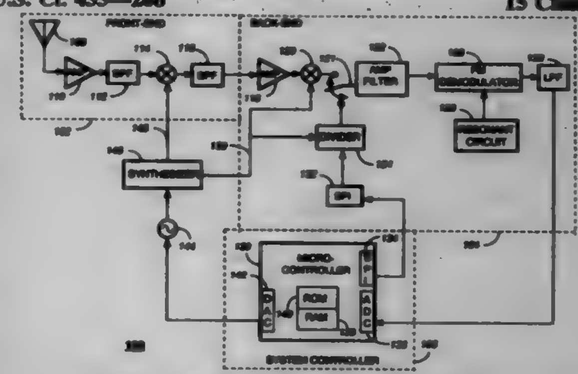

1. A method of calibrating a radio receiver which has a desired IF center frequency (fo) and an FM demodulator with an operating frequency range, the method comprising:
(1) generating within the radio receiver a plurality of reference signals having frequencies within the operating frequency range of the FM demodulator;
(2) applying the plurality of reference signals to the FM demodulator for generating demodulated reference signals;
(3) using the demodulated reference signals to determine for the FM demodulator a transfer function that is predictive of amplitude versus frequency characteristics of signals to be demodulated by the FM demodulator;
(4) receiving data from a transmitted signal, converting the received data to data having an intermediate frequency (IF data) and applying the IF data to the FM demodulator to generate demodulated data;
(5) comparing a characteristic of the demodulated data to the transfer function so as to determine whether the intermediate frequency of the demodulated data differs from frequency fo; and
(6) adjusting the intermediate frequency of the demodulated data so as to bring it closer to f_o.

5,701,601

RECEIVE SIGNAL LEVEL DETECTION SYSTEM

Naohito Tomoe, and Takashi Kashiwagi, both of Amagasaki, Japan, assignors to Mitsubishi Denki Kabushiki Kaisha, Tokyo, Japan

Filed May 22, 1995, Ser. No. 445,508

Claims priority, application Japan, Jun. 1, 1994, 6-119834

Int. Cl.⁶ H04B *17/00*

U.S. Cl. 455—226.2 **5 Claims**

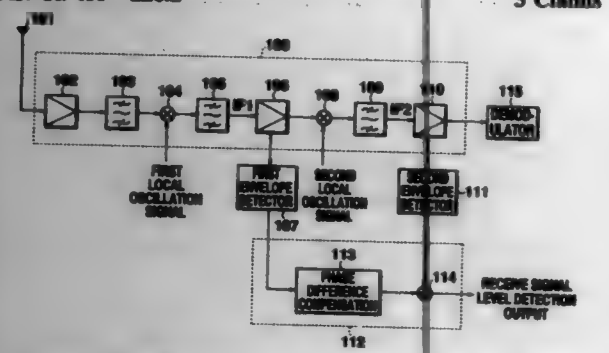

1. A receive signal detection system suitable for use in a super-heterodyne receiver, comprising:

first detection means for detecting a first receive signal level through a high or intermediate frequency amplifier amplifying a radio or intermediate frequency signal at a first intermediate frequency and for outputting a signal level having a linear receive signal input level to level detection output characteristic when the receive signal input level exceeds a predetermined value;

second detection means for detecting a second receive signal level through a limiter amplifier amplifying an intermediate frequency signal converted from said radio and for outputting a signal level having a linear receive signal input level to level detection output characteristic when the receive signal input level is equal to or lower than the predetermined value; and

means for combining the first and second receive signal levels to generate a receive signal level detection output having a linear detection characteristic in either of an input level in which the detection characteristic of the first receive signal level has linearity or another input level in which the detection characteristic of the second receive signal level has linearity.

5,701,602

FREQUENCY CONTROL APPARATUS FOR BASE STATION IN SATELLITE COMMUNICATION SYSTEM

Hiromi Shimoda, Tokyo, Japan, assignor to NEC Corporation, Tokyo, Japan

Filed Mar. 30, 1994, Ser. No. 220,024

Claims priority, application Japan, Mar. 31, 1993, 5-098549

Int. Cl.⁶ H04B *1/16*

U.S. Cl. 455—260 **6 Claims**

1. A frequency control apparatus for controlling frequency of an input signal, comprising:

a first mixer for mixing said input signal and a first frequency converting signal to deliver a first frequency-converted signal;

a first oscillator for generating said first frequency converting signal in response to a first control signal;

a phase detector for detecting a phase difference between said first frequency-converted signal and a reference signal, said phase difference corresponding to said first control signal;

a synchronization detector responsive to said phase difference for detecting a phase-locked state or a phase-unlocked state;

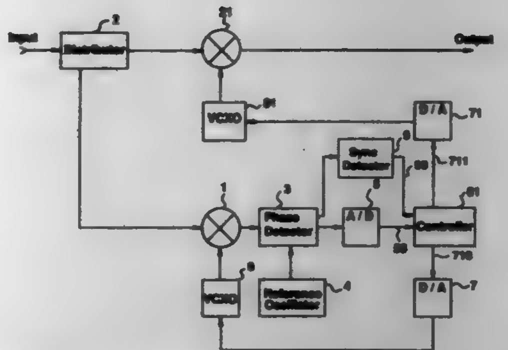

a second mixer for mixing said input signal and a second frequency converting signal to deliver a second frequency-converted signal;

a second oscillator for generating said second frequency converting signal in response to a second control signal; and

a selecting means responsive to an output of said synchronization detector for selecting said phase difference or a preset signal to deliver said second control signal, wherein said first and second control signals are delivered as a resultant output.

5,701,603

RADIO APPARATUS HAVING A PLURALITY OF ANTENNAS

Hidehiko Norimatsu, Tokyo, Japan, assignor to NEC Corporation, Tokyo, Japan

Filed Apr. 25, 1995, Ser. No. 428,051

Claims priority, application Japan, Apr. 28, 1994, 6-111674

Int. Cl.⁶ H04B *1/18*

U.S. Cl. 455—277.1 **6 Claims**

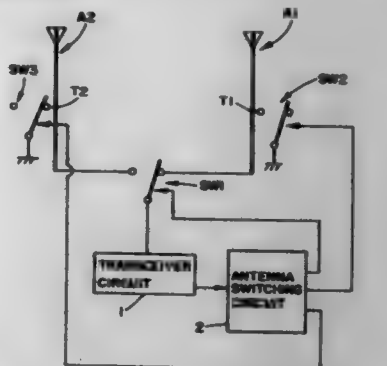

1. A radio apparatus which is provided with a plurality of antennas and which selects one of these antennas to be connected to a radio circuit, comprising:

a plurality of switch means each of which is provided to said respective antennas and is capable of grounding a maximum point in a current distribution of a standing wave of each of said antennas; and

means for operating a first switch means of a non-selected antenna to ground said non-selected antenna without grounding said one of these antennas which is connected to said radio circuit, said first switch means being one of said plurality of switch means.

5,701,604

Patent Not Issued For This Number

DESIGNS

GRANTED December 23, 1997

ERRATA

For CLASS	See PATENT NO.
D12–147	D388,058
D13–103	388,060
D13–152	388,061
D10–039	388,204

DESIGNS

DECEMBER 23, 1997

387,885
ELEMENT OF A SHOE UPPER
Peter M. Fogg, Lake Oswego, Oreg., assignor to Nike, Inc., Beaverton, Oreg.
Filed May 23, 1997, Ser. No. 71,218
Term of patent 14 years
LOC (6) Cl. 02 - *99*
U.S. Cl. D2—972

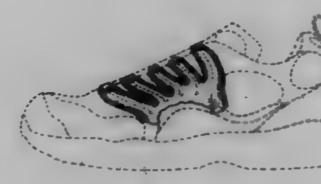

387,886
WRIST WARMER
Brian G. Smith, and Carol J. Smith, both of 254 Compton Rd., Cincinnati, Ohio 45215
Filed Nov. 21, 1996, Ser. No. 62,670
Term of patent 14 years
LOC (6) Cl. 02 - *06*
U.S. Cl. D2—610

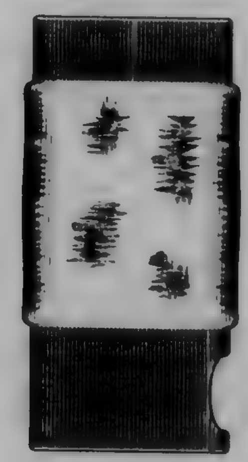

387,887
COMBINED VEHICLE SAFETY-BELT BUCKLE COVER AND A TONGUE PLATE HOUSING COVER
Paula J. Jensen, 22334 Cardiff Dr., Saugus, Calif. 91350
Filed May 31, 1996, Ser. No. 55,280
Term of patent 14 years
LOC (6) Cl. 02 - *07*
U.S. Cl. D2—639

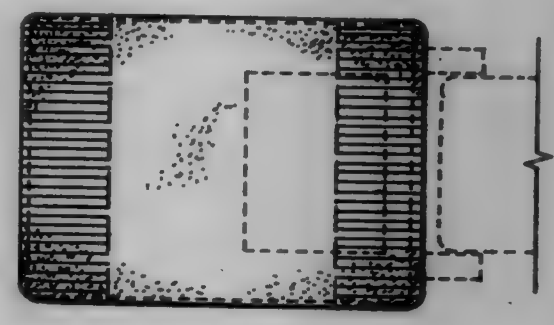

387,888
HAT
Jon Farbman, 344 Ocean Blvd., Atlantic Highlands, N.J. 07716
Filed Sep. 20, 1996, Ser. No. 60,068
Term of patent 14 years
LOC (6) Cl. 02 - *03*
U.S. Cl. D2—869

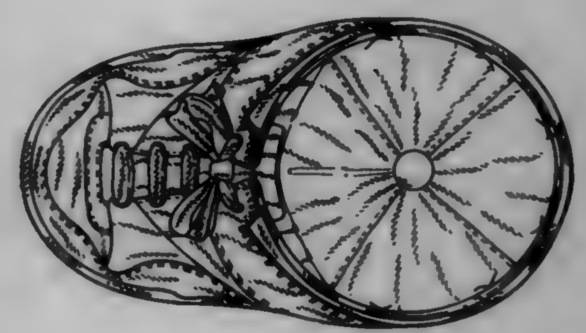

387,889

VISOR

Jon Farbman, 344 Ocean Blvd., Atlantic Highlands, N.J. 07716

Filed Oct. 10, 1996, Ser. No. 62,945

Term of patent 14 years

LOC (6) Cl. 02 - *03*

U.S. Cl. D2—872

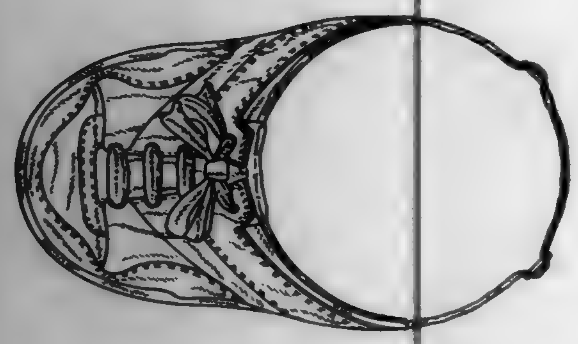

387,890

SHOE SOLE

Mark Faulconer, 200 Paris La., and Tim Bowman, 210 Lile La., both of Newport Beach, Calif. 92663

Filed Apr. 10, 1996, Ser. No. 52,924

Term of patent 14 years

LOC (6) Cl. 02 - *04*

U.S. Cl. D2—953

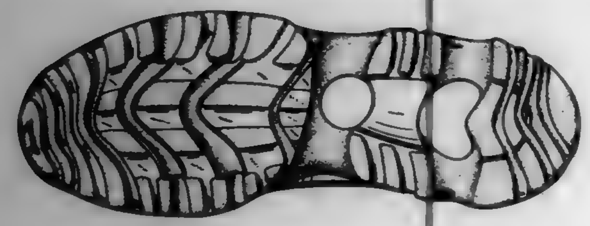

387,891

SHOE OUTSOLE

Ricardo Vestuti, Portland, Oreg., assignor to Nike, Inc., Beaverton, Oreg.

Filed Nov. 19, 1996, Ser. No. 62,572

Term of patent 14 years

LOC (6) Cl. 02 - *04*

U.S. Cl. D2—959

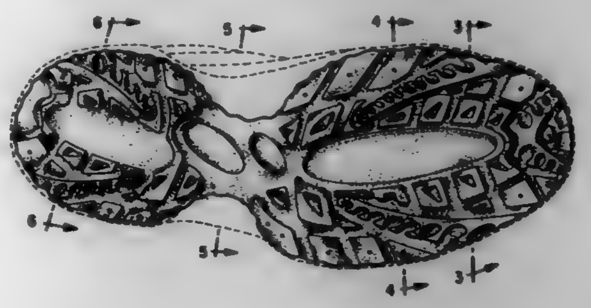

387,892

CLEATED SHOE SOLE

Antoine Briant, Hauptendorfer Str. 30, D-91074 Herzogenaurach, France

Filed Nov. 20, 1995, Ser. No. 46,914

Claims priority, application Germany, May 19, 1995, 95 04 033.1

Term of patent 14 years

LOC (6) Cl. 02 - *04*

U.S. Cl. D2—962

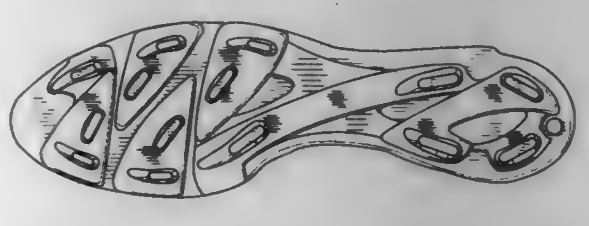

387,893

SANDAL UPPER

Dale Bathum, 4610 E. Mercer Way, Mercer Island, Wash. 98040

Filed Aug. 15, 1996, Ser. No. 58,452

Term of patent 14 years

LOC (6) Cl. 02 - *04*

U.S. Cl. D2—969

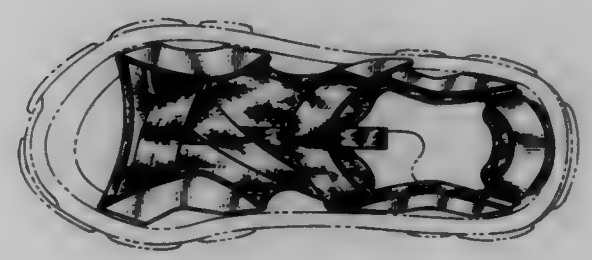

387,894

SHOE UPPER ELEMENT

Kevin J. Crowley, Brentwood, N.H., assignor to Fila U.S.A., Inc., Sparks, Md.

Filed Apr. 30, 1996, Ser. No. 55,717

Term of patent 14 years

LOC (6) Cl. 02 - *99*

U.S. Cl. D2—972

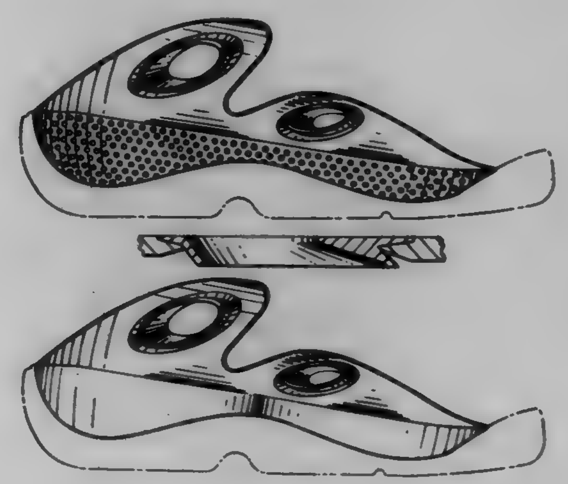

387,895

PORTION OF A SHOE OUTSOLE

Aaron Alexander Carroll Cooper, Portland, Oreg., assignor to Nike, Inc., Beaverton, Oreg.

Filed Dec. 17, 1996, Ser. No. 63,859

Term of patent 14 years

LOC (6) Cl. 02 - *04*

U.S. Cl. D2—960

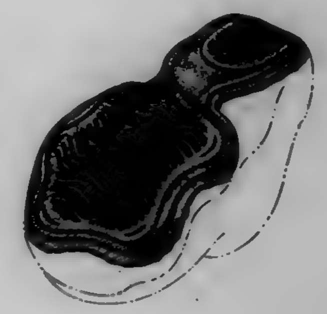

387,896

COMBINED BACK PACK AND BACK REST

Donald Dewey, 37443 3rd St., Fremont, Calif. 94536

Filed Nov. 21, 1996, Ser. No. 62,668

Term of patent 14 years

LOC (6) Cl. 03 - *99*

U.S. Cl. D3—214

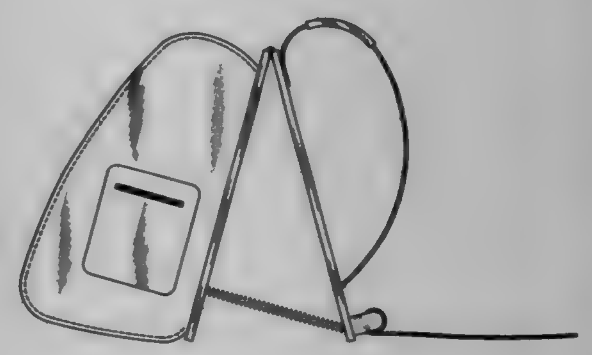

387,897
SMOKELESS TOBACCO CAN HOLDER
Chris G. Yorke, and Kevin G. Kernen, both of 35111 NE. 94th Ave., La Center, Wash. 98629
Filed May 3, 1996, Ser. No. 54,002
Term of patent 14 years
LOC (6) Cl. 03 - *01*
U.S. Cl. D3—215

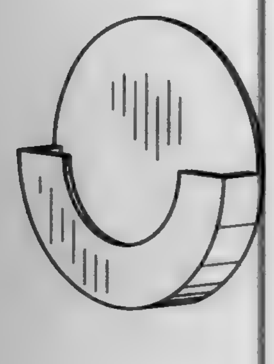

387,899
FLY STRIP
Robert J. Okumura, 7673 Hill Haven Ct., Antelope, Calif. 95843
Filed May 15, 1996, Ser. No. 54,498
Term of patent 14 years
LOC (6) Cl. 03 - *01*
U.S. Cl. D3—221

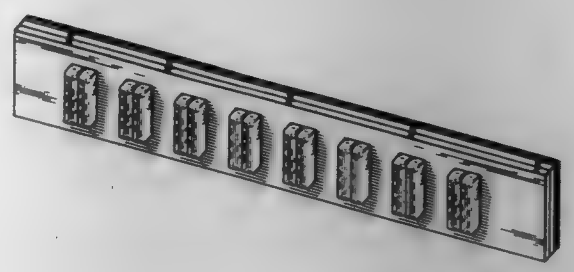

387,898
BODY WORN PORTABLE BATTERY CONTAINER
Peter A. Ronzani, Los Gatos, Calif., assignor to Xybernaut Corporation, Fairfax, Va.
Filed Sep. 27, 1996, Ser. No. 60,424
Term of patent 14 years
LOC (6) Cl. 03 - *01*
U.S. Cl. D3—215

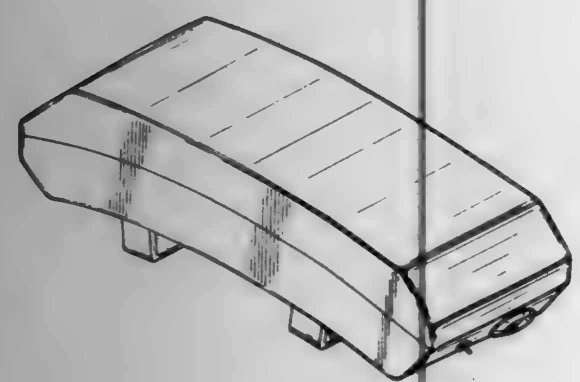

387,900
CLIP ON GOLF BALL HOLDER
Victor D'Agostino, Northbrook, Ill., assignor to PFT Enterprises, Inc., Vernon Hills, Ill.
Filed Aug. 26, 1996, Ser. No. 58,849
Term of patent 14 years
LOC (6) Cl. 03 - *01*
U.S. Cl. D3—221

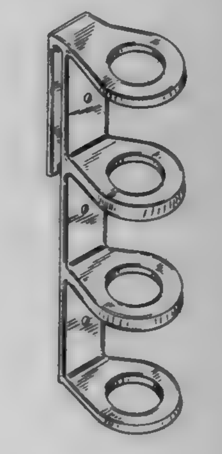

387,901
SHOULDER POUCH
Charles H. Ellis, Seattle, and Byron S. Washington, Tukwila, both of Wash., assignors to Ché Enterprizes Inc., Seattle, Wash.
Filed Jun. 20, 1996, Ser. No. 56,105
Term of patent 14 years
LOC (6) Cl. 03 - *01*
U.S. Cl. D3—226

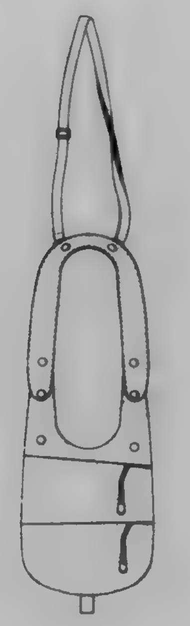

387,903
SHIPPING CONTAINER
Robert Jacoby, Colorado Springs, Colo., and Barry Gregerson, Deephaven, Minn., assignors to Empak, Inc., Chanhassen, Minn.
Filed Oct. 13, 1995, Ser. No. 45,248
Term of patent 14 years
LOC (6) Cl. 03 - *01*
U.S. Cl. D3—273

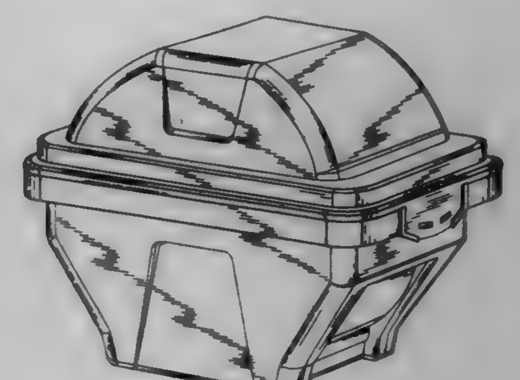

387,902
TOOL HOLDER
David Yin, P.O. Box 63-99, Taichung, Taiwan
Filed Nov. 8, 1996, Ser. No. 62,160
Term of patent 14 years
LOC (6) Cl. 03 - *01*
U.S. Cl. D3—271

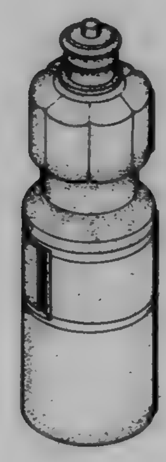

387,904
CRAFT BOX
Kathryn M. McEntee, Washington, N.C., assignor to Tucker Housewares, Leominster, Mass.
Filed Feb. 12, 1996, Ser. No. 50,247
Term of patent 14 years
LOC (6) Cl. 03 - *01*
U.S. Cl. D3—273

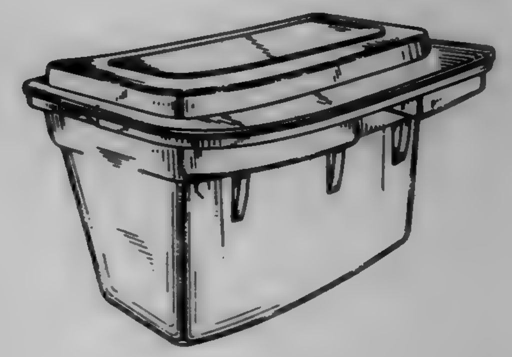

387,905
SUITCASE
Mark Powell, Stratford-Upon-Avon, Great Britain, assignor to Bayerische Motoren Werke Aktiengesellschaft, Germany
Filed Jul. 1, 1996, Ser. No. 56,512
Term of patent 14 years
LOC (6) Cl. 03 - *01*
U.S. Cl. D3—281

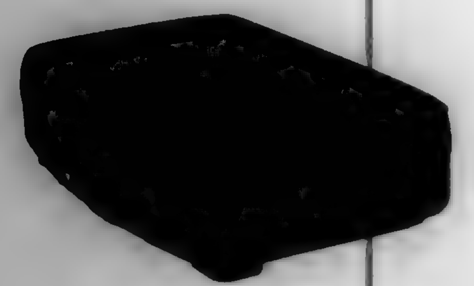

387,906
COMPARTMENTED CONTAINER
Diana May Petty, 40 South Drive, Toronto, Ontario, Canada, M4W 1R1
Filed Oct. 1, 1996, Ser. No. 60,770
Claims priority, application Canada, Sep. 6, 1996, 1996-2002
Term of patent 14 years
LOC (6) Cl. 03 - *01*
U.S. Cl. D3—299

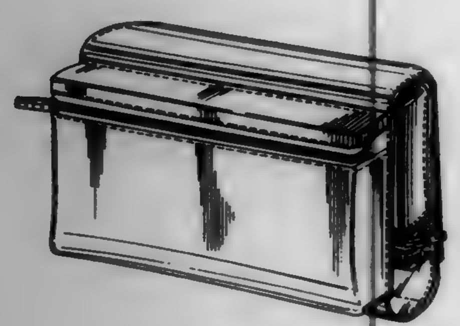

387,907
COMBINED CONTAINER FOR COMPUTER SOFTWARE AND MANUALS
John E. Vandigriff, 190 N. Stemmons Frwy., Suite 200, Lewisville, Tex. 75067
Filed Oct. 23, 1995, Ser. No. 45,502
Term of patent 14 years
LOC (6) Cl. 03 - *99*
U.S. Cl. D3—319

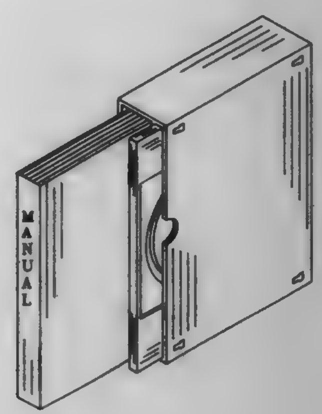

387,908
ELECTRIC TOOTHBRUSH
Franz Alban Stützer, Offenbach am Main, and Bernd Figur, Schaafheim/Schlierbach, both of Germany, assignors to Rowenta-Werke GmbH, Offenbach a.M., Germany
Filed Aug. 29, 1996, Ser. No. 58,984
Claims priority, application Germany, Feb. 29, 1996, M9601935.2
Term of patent 14 years
LOC (6) Cl. 04 - *02*
U.S. Cl. D4—101

387,909
NAIL POLISH BOTTLE
Janet Mattson, 76 Valentine Drive, Toronto, Ontario, Canada, M3A 3J8
Filed Oct. 31, 1996, Ser. No. 61,819
Term of patent 14 years
LOC (6) Cl. 04 - *02*
U.S. Cl. D4—116

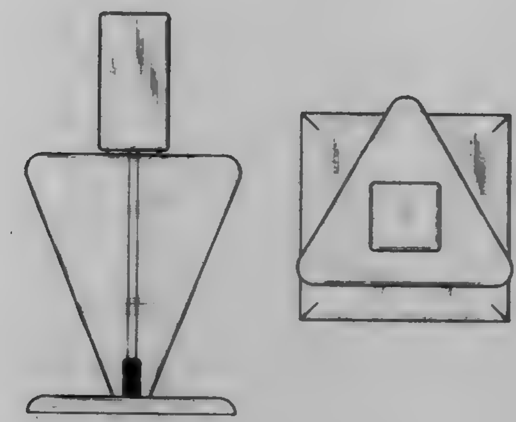

387,910
PIVOT-HANDLED BROOM
Enzo Berti, Venice, Italy, assignor to The Libman Company, Arcola, Ill.
Filed Sep. 27, 1996, Ser. No. 60,395
Term of patent 14 years
LOC (6) Cl. 04 - *99*
U.S. Cl. D4—199

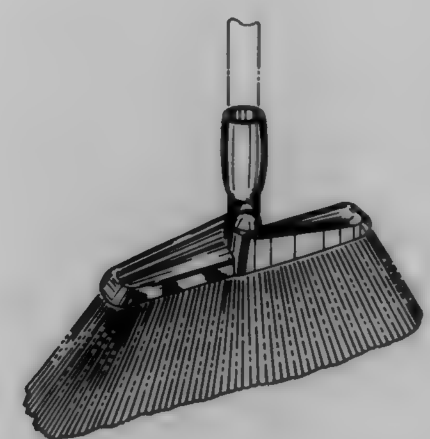

387,911
HANGER
Gary M. Albert, 36-19 Bowne St., Flushing, N.Y. 11354
Filed Sep. 11, 1996, Ser. No. 59,452
Term of patent 14 years
LOC (6) Cl. 06 - *08*
U.S. Cl. D6—317

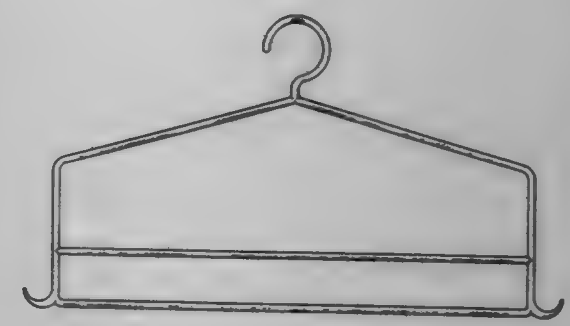

387,912
HANGER FOR SWIM SUITS, BRASSIERES AND LINGERIE
Gerhard Fildan, Wohnpark Alte Erlaa, Anton Baumgartner Str. 44, C 4 17 01, A-1232 Vienna, Austria
Filed Nov. 26, 1996, Ser. No. 63,077
Claims priority, application Germany, Jun. 25, 1996, M 96 04 902.2
Term of patent 14 years
LOC (6) Cl. 06 - *08*
U.S. Cl. D6—326

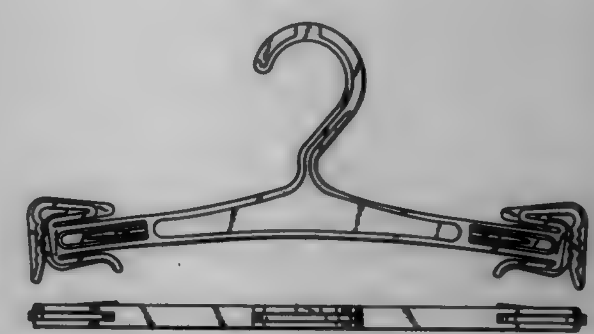

387,913
PICNIC TABLE
Arno Roland Yurk, Kalamazoo, Mich., assignor to Landscape Forms, Inc., Kalamazoo, Mich.
Filed Oct. 22, 1996, Ser. No. 61,359
Term of patent 14 years
LOC (6) Cl. 06 - *01*
U.S. Cl. D6—337

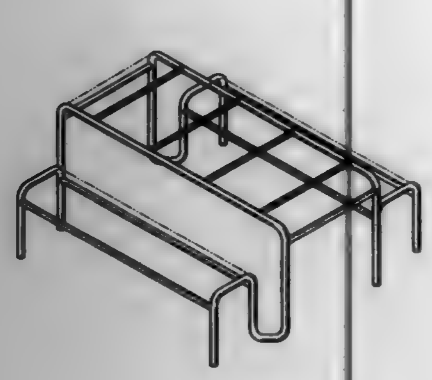

387,914
VEHICLE SEAT
Frank Beermann, Kirchheim; Bernd Rager, Bissingen, and Dieter Armbrecht, Kirchheim, all of Germany, assignors to Keiper Recaro GmbH & Co., Remscheid, Germany
Filed Nov. 13, 1995, Ser. No. 46,342
Claims priority, application Germany, Jun. 28, 1995, M 95 05 103.1
Term of patent 14 years
LOC (6) Cl. 06 - *01*
U.S. Cl. D6—356

387,915
BENCH
Rick Saban, 11108 W. 84th Pl., Willow Springs, Ill. 60480
Filed Sep. 27, 1996, Ser. No. 60,386
Term of patent 14 years
LOC (6) Cl. 06 - *01*
U.S. Cl. D6—358

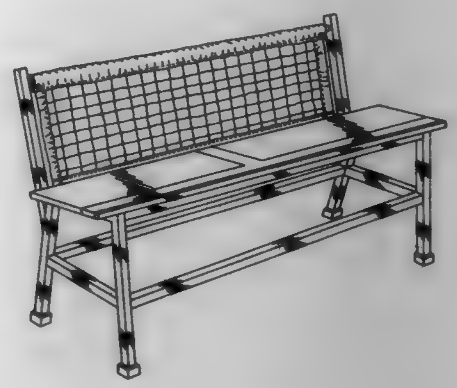

387,916
BENCH
Rick Saban, 11108 W. 84th Pl., Willow Springs, Ill. 60480
Filed Sep. 27, 1996, Ser. No. 60,389
Term of patent 14 years
LOC (6) Cl. 06 - *01*
U.S. Cl. D6—358

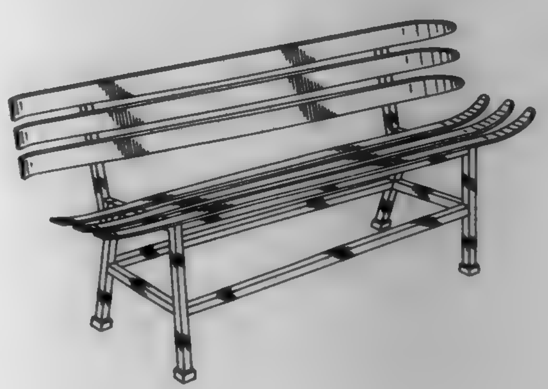

387,917
CHAIR
Romeo Tedesco, Weston, and Jocelyn Beaulieu, Newmarket, both of Canada, assignors to Global Upholstery Company, Downsview
Division of Ser. No. 50,889, Feb. 29, 1996, which is a continuation-in-part of Ser. No. 40,996, Jun. 30, 1995, Pat. No. Des. 374,778. This application Apr. 8, 1997, Ser. No. 68,890
Term of patent 14 years
LOC (6) Cl. 06 - *01*
U.S. Cl. D6—366

387,918
CHAIR
Simon Desanta, Schlossallee 18, D-33829 Borgholzhausen, Germany
Filed Jun. 20, 1996, Ser. No. 56,024
Claims priority, application Germany, Dec. 20, 1995, M9509920.4
Term of patent 14 years
LOC (6) Cl. 06 - *01*
U.S. Cl. D6—372

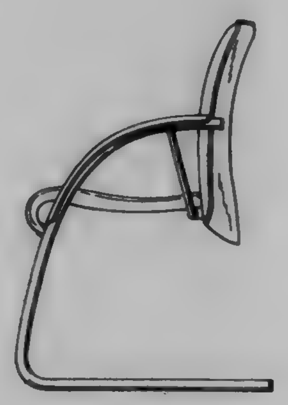

387,919
HEADBOARD AND FOOTBOARD SET FOR A BED
H. Thomas Keller, and Scott Rindon, both of High Point, N.C., assignors to Vaughan Furniture Company
Division of Ser. No. 30,024, Oct. 20, 1994, Pat. No. Des. 375,514. This application Jun. 5, 1995, Ser. No. 39,815
Term of patent 14 years
LOC (6) Cl. 06 - *01*
U.S. Cl. D6—393

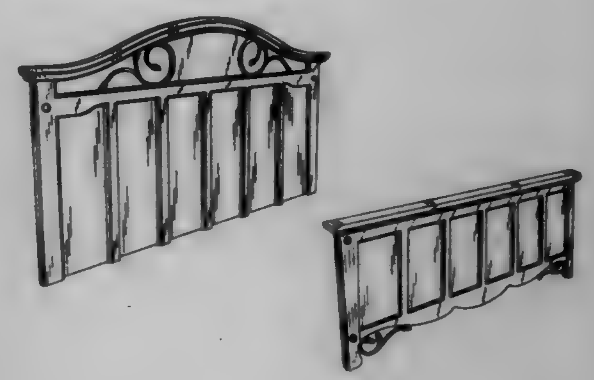

387,920
COMBINED CHEVAL MIRROR AND CONCEALED STORAGE COMPARTMENT FOR JEWELRY
Lawrence Powell, Culver City, Calif., assignor to L. Powell Co., Inc., Culver City, Calif.
Filed Nov. 18, 1996, Ser. No. 62,541
Term of patent 14 years
LOC (6) Cl. 06 - *04*
U.S. Cl. D6—397

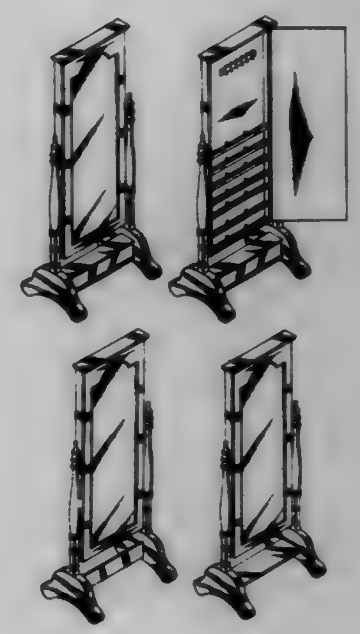

387,921
BEACH TABLE
Michael R. Shields, 1702 Three Meadows Rd., Greensboro, N.C. 27408
Filed Oct. 3, 1996, Ser. No. 60,641
Term of patent 14 years
LOC (6) Cl. 06 - *04*
U.S. Cl. D6—417

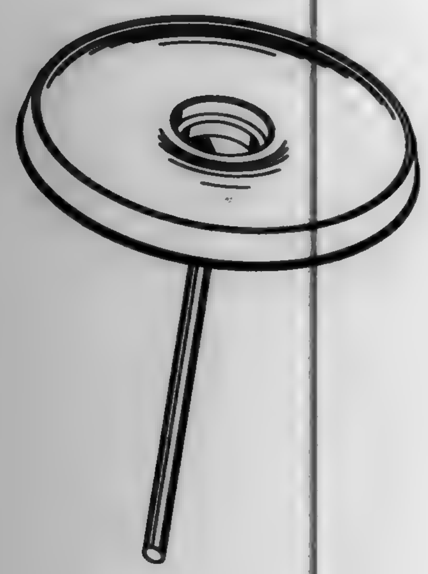

387,922
PARTITION HOLDER
Nicholas Q. Dormon, London, United Kingdom, and David A. Oetman, Grand Rapids, Mich., assignors to Steelcase Inc., Grand Rapids, Mich.
Filed Jun. 7, 1996, Ser. No. 55,593
Term of patent 14 years
LOC (6) Cl. 06 - *06*
U.S. Cl. D6—418

387,923
CABINET WITH ADJUSTABLE DRAWER
Daniel McKinney, 3821 Hopkins Ave., Apt. #62, Titusville, Fla. 32780
Filed Mar. 21, 1995, Ser. No. 36,473
Term of patent 14 years
LOC (6) Cl. 06 - *04*
U.S. Cl. D6—429

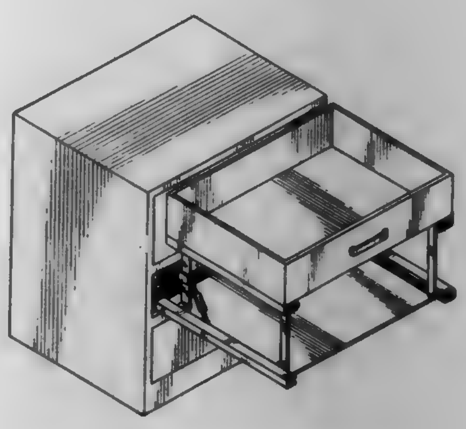

387,924
CURIO
Paul A. Rosebrock, Morganton, N.C., assignor to Henredon Furniture Industries, Inc., Morganton, N.C.
Filed Oct. 17, 1995, Ser. No. 45,323
Term of patent 14 years
LOC (6) Cl. 06 - *04*
U.S. Cl. D6—436

387,925
COMBINED DRESSER, GALLERY BOX AND MIRROR
H. Thomas Keller, and Scott Risdon, both of High Point, N.C., assignors to Vaughan Furniture Company, Inc., Galax, Va.
Division of Ser. No. 44,891, Oct. 3, 1995, Pat. No. Des. 378,031, which is a division of Ser. No. 30,024, Oct. 20, 1994, Pat. No. Des. 375,514. This application Jul. 12, 1996, Ser. No. 56,973
Term of patent 14 years
LOC (6) Cl. 06 - *04*
U.S. Cl. D6—438

387,926
END TABLE FOR STORING A COOL CHEST
Jeffry L. Blaesing, 122 Knollwood Dr., Hurt, Va. 24563
Filed Jul. 19, 1996, Ser. No. 57,233
Term of patent 14 years
LOC (6) Cl. 06 - *04*
U.S. Cl. D6—445

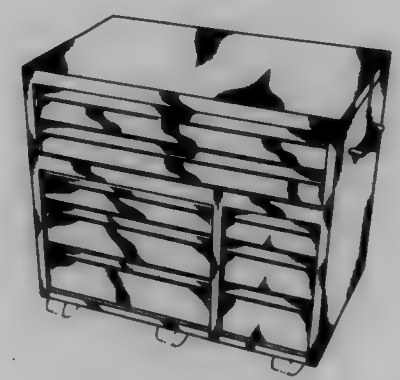

387,927
VERTICAL SUPPORT
Antonio Canton Gongora; Carlos Jesús Cruz Fernandez; José María Muñagorri Enriquez, and Juan Carlos Rayo Ortigüela, all of Madrid, Spain, assignors to Telefonica de Espana, S.A., Madrid, Spain
Filed Nov. 21, 1996, Ser. No. 62,710
Claims priority, application Spain, May 21, 1996, 137527
Term of patent 14 years
LOC (6) Cl. 06 - *06*
U.S. Cl. D6—495

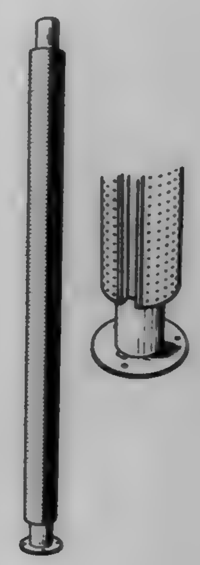

387,928
SHELF MOUNTABLE ROTATABLE ORGANIZER
Thomas A. Hunt, Encinitas, Calif., assignor to Spectrum Concepts, Inc., Encinitas, Calif.
Filed Nov. 19, 1996, Ser. No. 62,994
Term of patent 14 years
LOC (6) Cl. 06 - *04*
U.S. Cl. D6—511

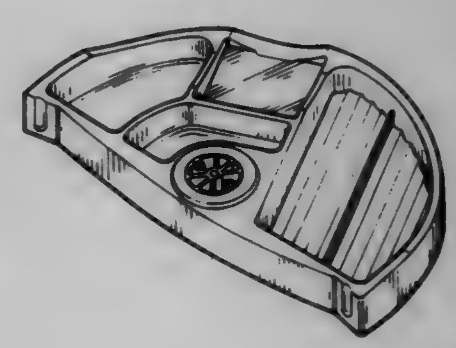

387,929
HANGING CLOSET HAMPER
James W. Stewart, San Rafael, Calif., assignor to Clothesmate Products, Inc., San Rafael, Calif.
Filed May 2, 1996, Ser. No. 53,954
Term of patent 14 years
LOC (6) Cl. 06 - *04*
U.S. Cl. D6—513

387,930
HOLDER FOR A SHAVING TOOL
Eli Israel, 3/43 Naaman Street, Ashdod 77707, Israel, and Gabriel Israel, Rembrandt Street 4, Ashdod 77632, Israel
Filed Mar. 14, 1996, Ser. No. 51,640
Term of patent 14 years
LOC (6) Cl. 06 - *02*
U.S. Cl. D6—526

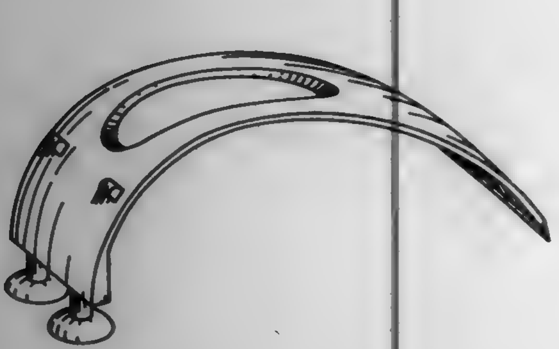

387,931
SOAP DISPENSER
Cheng-Chang Chen, Taipei Hsien, Taiwan, assignor to Bobson Hygiene International Inc., Taipei Hsien, Taiwan
Filed Nov. 22, 1996, Ser. No. 62,754
Term of patent 14 years
LOC (6) Cl. 07 - *07*
U.S. Cl. D6—545

387,932
PRODUCT DISPLAY HANGERS
D. Michael Baker, Louisville, Ky., and Archer D. Wright, Glen Allen, Va., assignors to Credo Tool Company, Woodburn, Oreg.
Filed Sep. 30, 1996, Ser. No. 60,478
Term of patent 14 years
LOC (6) Cl. 08 - *08*
U.S. Cl. D6—566

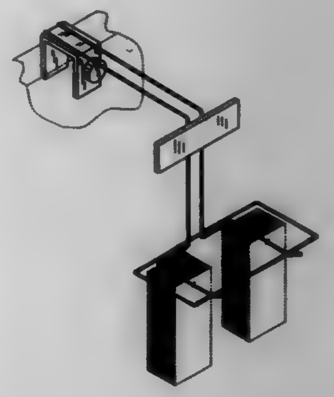

387,933
RACK FOR ELONGATED OBJECT
Louis R. Effron, 5106 Leeward Ave., Orlando, Fla. 32809
Division of Ser. No. 54,821, May 22, 1996. This application Apr. 11, 1997, Ser. No. 69,128
Term of patent 14 years
LOC (6) Cl. 06 - *04*
U.S. Cl. D6—566

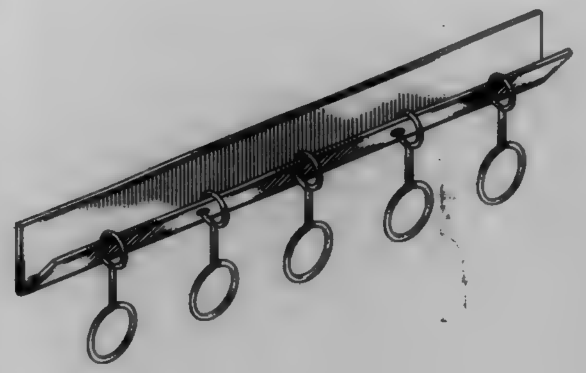

387,934
ORNAMENTAL CHILD'S FOLDABLE SEAT CUSHION IN THE FANCIFUL FORM OF A FROG
Hillard Bear, Beverly Hills, Calif., assignor to KKH Corp., Culver City, Calif.
Filed Aug. 25, 1995, Ser. No. 43,111
Term of patent 14 years
LOC (6) Cl. 06 - *09*
U.S. Cl. D6—598

387,935
LAMB SHAPED HEAD AND NECK SUPPORT PILLOW
Glade A. Wisler, Dodgeville, Wis., assignor to Barker Creek Products, LLC, Dodgeville, Wis.
Filed Apr. 1, 1996, Ser. No. 52,959
Term of patent 14 years
LOC (6) Cl. 06 - *09*
U.S. Cl. D6—598

387,936
SET OF BEDDING
Celia J. Boyd, 5 LaClede Dr., Burlington Township, N.J. 08016
Filed Nov. 6, 1995, Ser. No. 46,012
Term of patent 14 years
LOC (6) Cl. 06 - *13*
U.S. Cl. D6—599

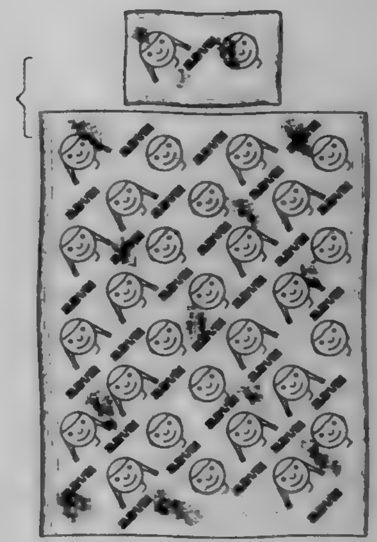

387,937
TRAVEL PILLOW
Charles Pujals, Jr., 119 Fayette St., Bridgeton, N.J. 08302
Filed Aug. 27, 1993, Ser. No. 12,259
Term of patent 14 years
LOC (6) Cl. 06 - *09*
U.S. Cl. D6—601

387,938
BOTTOM PROFILE OF A SHOE OUTSOLE
Robert J. Lucas, Portland, Oreg., assignor to Nike, Inc., Beaverton, Oreg.
Filed Nov. 7, 1996, Ser. No. 62,087
Term of patent 14 years
LOC (6) Cl. 02 - *04*
U.S. Cl. D2—951

387,939
LOUNGE CHAIR COVER
Vincent Tedesco, and Virginia Hart, both of 288 Greve Dr., New Milford, N.J. 07646-1531
Filed Oct. 10, 1996, Ser. No. 60,913
Term of patent 14 years
LOC (6) Cl. 06 - *13*
U.S. Cl. D6—610

387,940
DISPOSABLE VEHICLE SEAT SHIELD
Jeanie Bruner, and Richard S. Bruner, both of 17604 Camelot Dr., Lowell, Ind. 46356
Filed Sep. 30, 1996, Ser. No. 60,455
Term of patent 14 years
LOC (6) Cl. 06 - *13*
U.S. Cl. D6—611

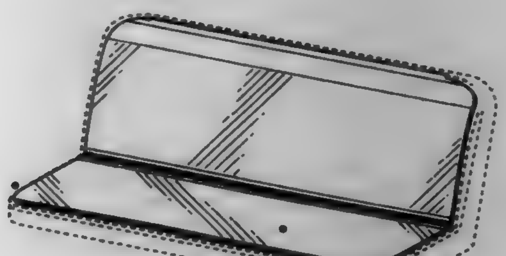

387,941
DISPOSABLE PLACE MAT
Carol A. Nicodemus, 327 Mercer Ave., Rochester, N.Y. 14606
Filed Jun. 17, 1996, Ser. No. 55,943
Term of patent 14 years
LOC (6) Cl. 06 - *13*
U.S. Cl. D6—616

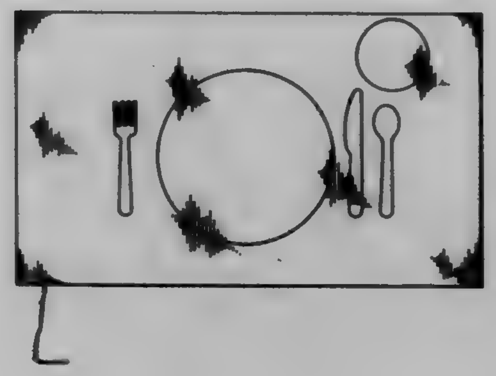

387,942
DOUBLE COLUMN STORAGE TOWER
Shahriar Dardashti, c/o Atlantic Representations, Inc., P.O. Box 2399, Santa Fe Springs, Calif. 90670
Filed Jul. 10, 1996, Ser. No. 56,860
Term of patent 14 years
LOC (6) Cl. 06 - *04*
U.S. Cl. D6—630

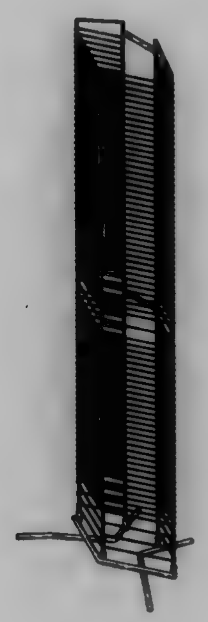

387,943
STORAGE UNIT FOR COMPACT DISKS, AUDIO CASSETTES AND THE LIKE
Roger F. Fink, 14 Orchard St., Greenfield, Mass. 01301
Filed Oct. 30, 1996, Ser. No. 61,758
Term of patent 14 years
LOC (6) Cl. 06 - *04*
U.S. Cl. D6—630

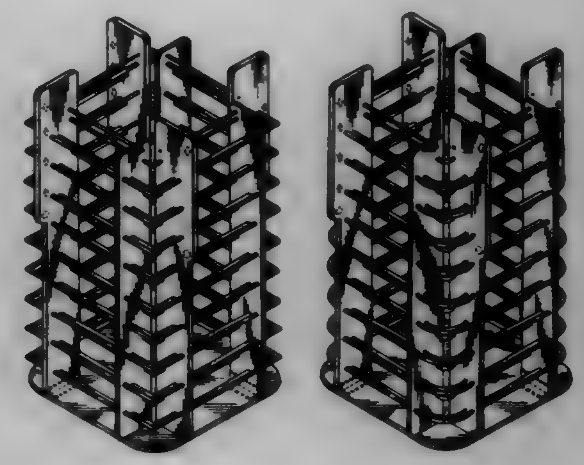

387,944
COFFEEMAKER HOUSING
Jan Hippen, Portland, Oreg., assignor to Black & Decker Inc., Newark, Del.
Filed Nov. 29, 1996, Ser. No. 62,858
Term of patent 14 years
LOC (6) Cl. 07 - *01*
U.S. Cl. D7—309

387,945
COFFEEMAKER HOUSING
Jan Hippen, Portland, Oreg., assignor to Black & Decker Inc., Newark, Del.
Filed Nov. 29, 1996, Ser. No. 62,861
Term of patent 14 years
LOC (6) Cl. 07 - *01*
U.S. Cl. D7—309

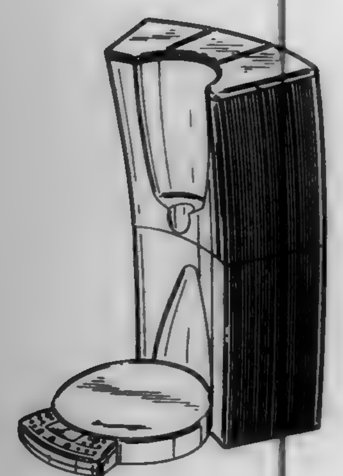

387,946
COFFEEMAKER
Jan Hippen, Portland, Oreg., assignor to Black & Decker Inc., Newark, Del.
Filed Nov. 29, 1996, Ser. No. 62,866
Term of patent 14 years
LOC (6) Cl. 07 - *01*
U.S. Cl. D7—309

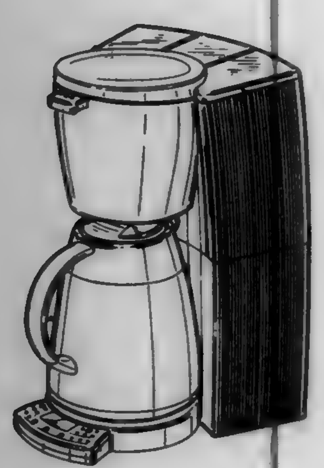

387,947
JUG
Michael Benbow, 28 Brook Road, Loughton, Essex, IG10 IBP, and Gary Dettmar, 79 Cressing Road, Braintree, Essex, CM7 6PW, both of England
Filed Jan. 11, 1994, Ser. No. 17,342
Claims priority, application United Kingdom, Jul. 12, 1993, 2032286; Jul. 12, 1993, 2032287; Jul. 12, 1993, 2032288; Jul. 12, 1993, 2032313
Term of patent 14 years
LOC (6) Cl. 07 - *01*
U.S. Cl. D7—319

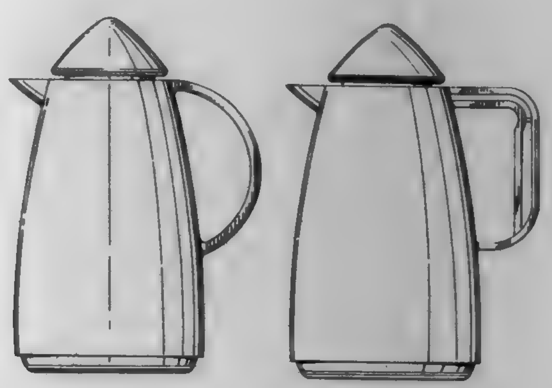

387,948
BLENDER
Bruno Leverrier, Lassay Les Chateaux, France, assignor to Moulinex S.A., Paris, France
Filed Nov. 4, 1996, Ser. No. 61,932
Claims priority, application France, May 2, 1996, 962778
Term of patent 14 years
LOC (6) Cl. 31 - *00*
U.S. Cl. D7—378

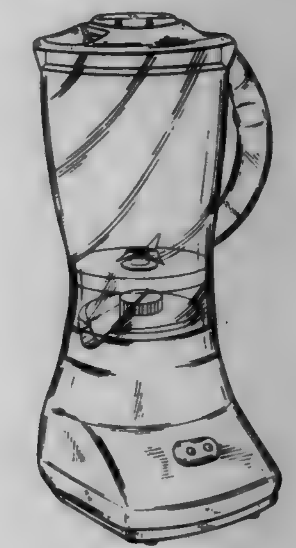

387,949
ROAST RACK
Wade S. Bentson, San Francisco, Calif., assignor to Amco Corporation, Chicago, Ill.
Filed Nov. 21, 1996, Ser. No. 63,011
Term of patent 14 years
LOC (6) Cl. 07 - *02*
U.S. Cl. D7—409

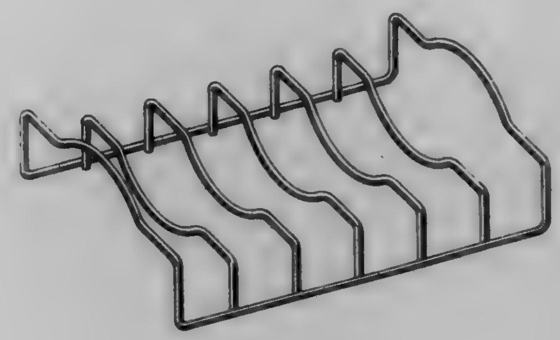

387,950
SERVING TRAY
Hector Virgilio Panta, Guayaquil, Ecuador, assignor to Pantalimentos, CIA. LTDA., Guayaquil, Ecuador
Filed Sep. 8, 1995, Ser. No. 43,629
Claims priority, application Ecuador, Mar. 7, 1995, S.D.I.-95-233
Term of patent 14 years
LOC (6) Cl. 07 - *01*
U.S. Cl. D7—551

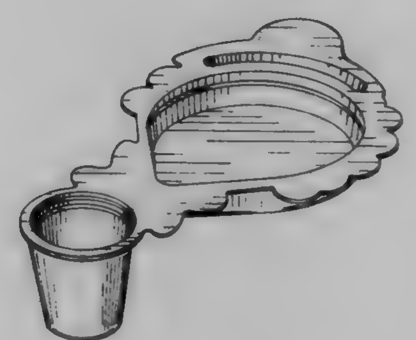

387,951
VACUUM FLASK
Frank Teh-Hsiung Huang, Suite 804, 8 Fl., No. 128, Sec. 3, Ming-Sheng E. Rd., Taipei, Taiwan
Filed Sep. 17, 1996, Ser. No. 59,874
Term of patent 14 years
LOC (6) Cl. 07 - *01*
U.S. Cl. D7—319

387,952
LID TRAY
Gladys Schneider, 631 S. Villa, Villa Park, Ill. 60181
Filed Oct. 9, 1996, Ser. No. 60,872
Term of patent 14 years
LOC (6) Cl. 07 - *07*
U.S. Cl. D7—637

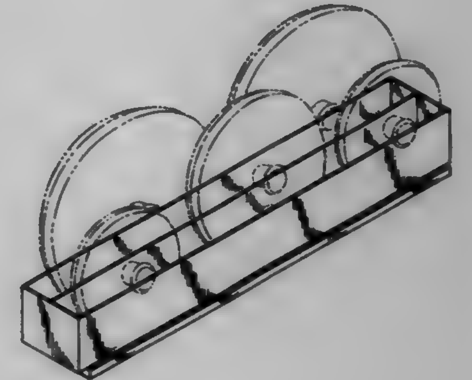

387,953
PASTA FORK
Allen W. Town, and Allen W. Town, II, both of 415 W. John St., Alexandria, Ind. 46001
Filed Jul. 26, 1996, Ser. No. 59,686
Term of patent 14 years
LOC (6) Cl. 07 - *03*
U.S. Cl. D7—643

387,954
DECORATIVE FLATWARE
Davis T. DeBrady, P.O. Box 2228, Warner Robins, Ga. 31099
Filed Nov. 29, 1996, Ser. No. 63,154
Term of patent 14 years
LOC (6) Cl. 07 - *03*
U.S. Cl. D7—645

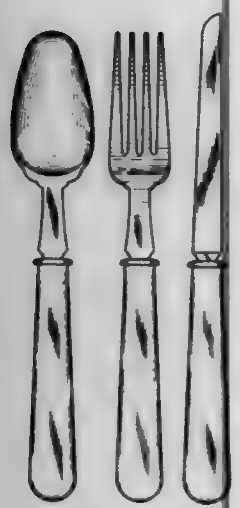

387,955
SPOON
Stephen W. Thompson, Oneida, N.Y., assignor to Oneida, Ltd., Oneida, N.Y.
Filed Nov. 26, 1996, Ser. No. 63,081
Term of patent 14 years
LOC (6) Cl. 07 - *03*
U.S. Cl. D7—653

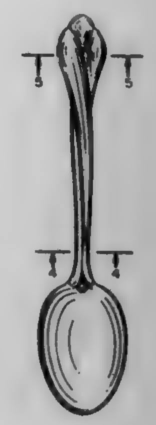

387,956
FORK
Hubert Gagnon, 308, rue du Grand-Hunier, Saint-Augustin-de-Desmaures, Quebec, Canada, G3A 2J1, and Aldo Balatti, 382, rue du Cantonnier, Saint-Augustin-de-Desmaures, Quebec, Canada, G3A 1N4
Division of Ser. No. 52,939, Apr. 10, 1996. This application Dec. 9, 1996, Ser. No. 63,480
Term of patent 14 years
LOC (6) Cl. 07 - *03*
U.S. Cl. D7—653

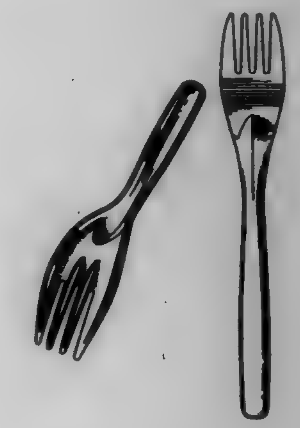

387,957
ANIMAL DRY FOOD SCOOP
Steven Frederick Keller, and Karen Sue Keller, both of 8721 Golden Gardens Dr., NW., Seattle, Wash. 98117
Filed Jul. 8, 1996, Ser. No. 56,699
Term of patent 14 years
LOC (6) Cl. 07 - *02*
U.S. Cl. D7—691

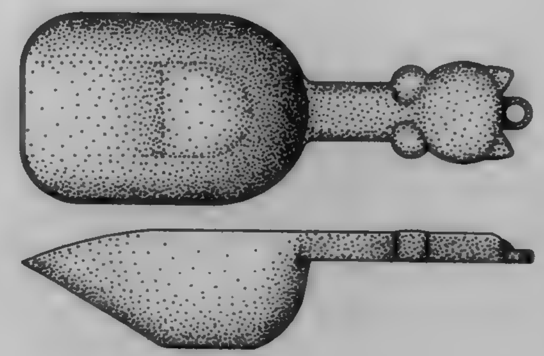

387,958
ANIMAL DRY FOOD SCOOP
Steven Frederick Keller, and Karen Sue Keller, both of 8721 Golden Gardens Dr., NW., Seattle, Wash. 98117
Filed Jul. 8, 1996, Ser. No. 56,709
Term of patent 14 years
LOC (6) Cl. 07 - *02*
U.S. Cl. D7—691

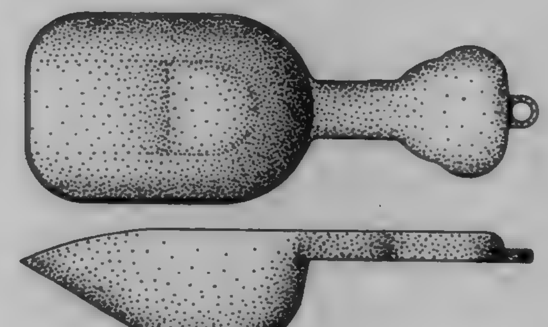

387,959
SANDWICH SPREADER
Morison S. Cousins, Winter Park, Fla., assignor to Dart Industries Inc., Orlando, Fla.
Filed May 7, 1996, Ser. No. 54,139
Term of patent 14 years
LOC (6) Cl. 07 - *06*
U.S. Cl. D7—696

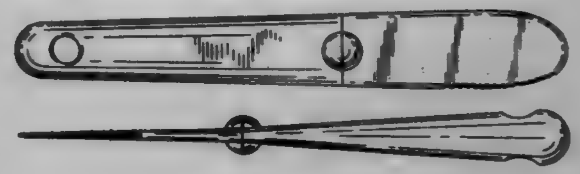

387,960
RATCHET WRENCH
Eric Sung, Taichung County, Taiwan, assignor to K.K.U. Ltd., Tokyo, Japan
Filed Apr. 30, 1996, Ser. No. 53,822
Term of patent 14 years
LOC (6) Cl. 08 - *05*
U.S. Cl. D8—61

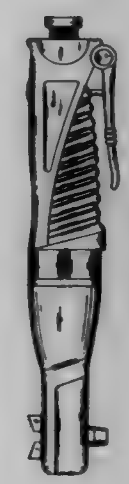

387,961
PORTABLE ELECTRO-HYDRAULIC CUTTER
Tadashi Yasui, Kyoto, and Kiyoko Yamaichi, Nagano, both of Japan, assignors to Japan Storage Battery Co., Ltd., Kyoto, and Izumi Products Company, Nagano, both of Japan
Filed Apr. 15, 1996, Ser. No. 53,118
Claims priority, application Japan, Oct. 13, 1995, 7-30681
Term of patent 14 years
LOC (6) Cl. 08 - *03*
U.S. Cl. D8—68

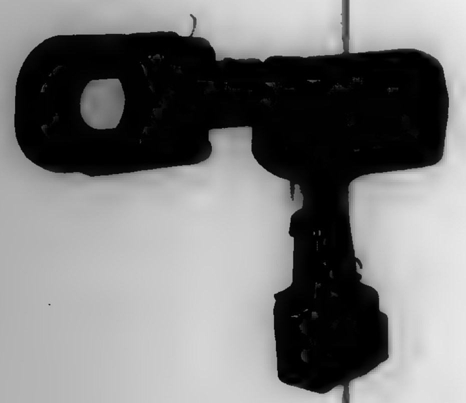

387,962
CORNER SANDER ATTACHMENT
Edmund Apolinski, Chicago, and David R. Daniels, Lake Villa, both of Ill., assignors to Wolfcraft, Inc., Itasca, Ill.
Filed Aug. 11, 1995, Ser. No. 42,556
Term of patent 14 years
LOC (6) Cl. 08 - *01*
U.S. Cl. D8—70

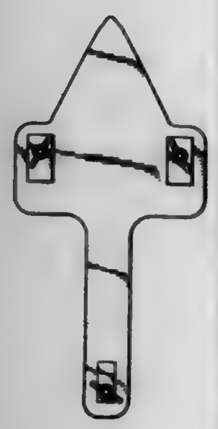

387,963
NAIL CAP ATTACHMENT FOR NAIL GUN
Stephen Clark, P.O. Box 691, Catlin, Ill. 61817
Filed May 10, 1996, Ser. No. 54,256
Term of patent 14 years
LOC (6) Cl. 08 - *01*
U.S. Cl. D8—70

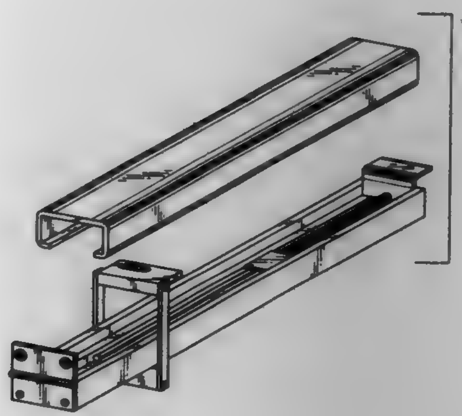

387,964
SCREWDRIVER
Jean-Jacques Urvoy, Paris, France, assignor to Meccano, S.A., Calais, France
Filed Mar. 1, 1996, Ser. No. 51,021
Claims priority, application Hague Agreement, Oct. 2, 1995, D12220; WIPO, Oct. 2, 1996, D12220
Term of patent 14 years
LOC (6) Cl. 08 - *04*
U.S. Cl. D8—82

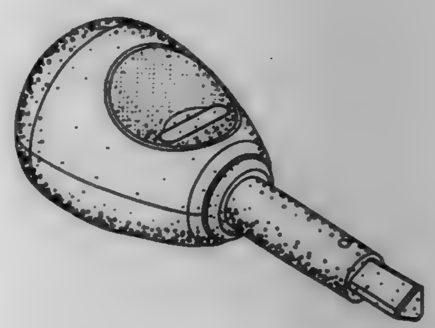

387,965
SHEARS
John S. Ronan, 11442 Adenmoor Ave., Downey, Calif. 90241
Filed Nov. 18, 1988, Ser. No. 273,006
Term of patent 14 years
LOC (6) Cl. 08 - *03*
U.S. Cl. D8—98

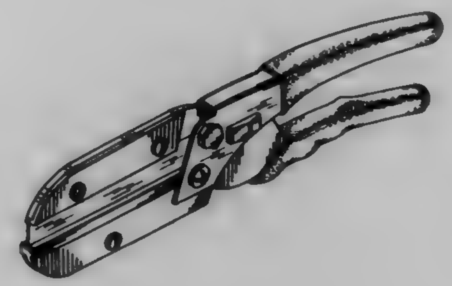

387,966
FOLDING KNIFE
Jess Horn, Florence, Oreg., assignor to Spyderco, Inc., Golden, Colo.
Filed Apr. 29, 1996, Ser. No. 53,739
Term of patent 14 years
LOC (6) Cl. 08 - *03*
U.S. Cl. D8—99

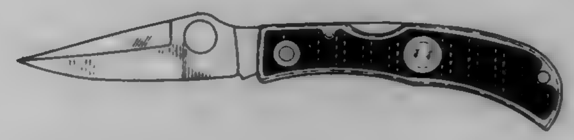

387,967
ENVELOPE OPENER
Frank J. Visconti, St. Louis County, Mo., assignor to Quick Point, Inc., Fenton, Mo.
Filed Jun. 27, 1996, Ser. No. 56,391
Term of patent 14 years
LOC (6) Cl. 08 - *03*
U.S. Cl. D8—102

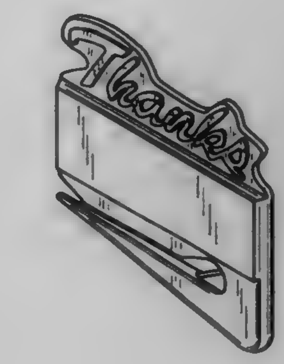

387,968
ADJUSTABLE HANDLE GRIP
Paul D. Dragon, P.O. Box 1822, Shavertown, Pa. 18708, and Edward T. Meikrantz, R.R. 2 Box 2177, Shickshinny, Pa. 18655
Filed Nov. 6, 1996, Ser. No. 62,067
Term of patent 14 years
LOC (6) Cl. 08 - *05*
U.S. Cl. D8—107

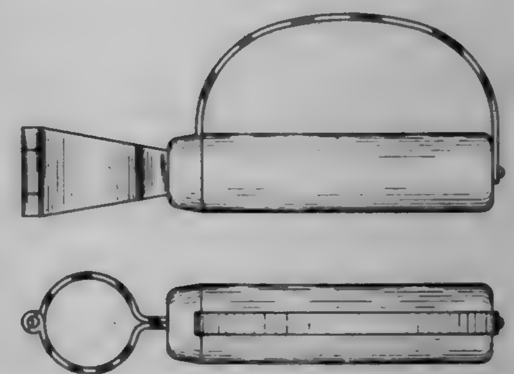

387,969
CONNECTOR
Josef Rabinovitz, c/o JMR Electronics, Inc., 20400 Plummer St., Chatsworth, Calif. 91311
Filed Mar. 8, 1996, Ser. No. 51,460
Term of patent 14 years
LOC (6) Cl. 08 - *05*
U.S. Cl. D8—349

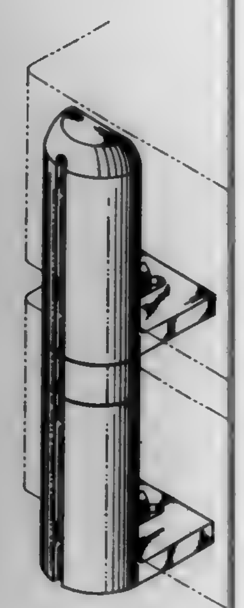

387,970
RADIUS WALL FRAMING BRACKET
Douglas L. Ensien, 1825 Willow Hill La., Toledo, Ohio 43615
Filed Jun. 27, 1996, Ser. No. 56,380
Term of patent 14 years
LOC (6) Cl. 08 - *05*
U.S. Cl. D8—349

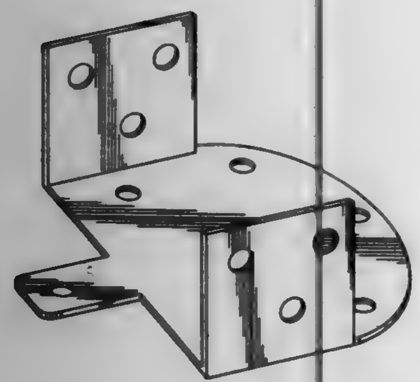

387,971
COMBINED HOUSING AND SECURING DEVICE
Stephen A. Nemeckay, Detroit, Mich., assignor to Dexter Automatic Products Company, Dexter, Mich.
Continuation-in-part of Ser. No. 312,816, Sep. 27, 1994, Pat. No. 5,538,299. This application Feb. 13, 1995, Ser. No. 34,807
Term of patent 14 years
LOC (6) Cl. 08 - *05*
U.S. Cl. D8—354

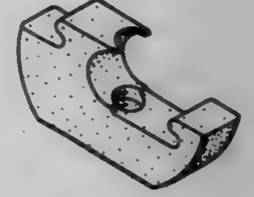

387,972
TAKE UP REEL FOR VENETIAN BLIND CORDS
Santo Hernandez, 601 Morris Ave., Apt. 1J, Bronx, N.Y. 10451
Filed Aug. 4, 1995, Ser. No. 42,249
Term of patent 14 years
LOC (6) Cl. 08 - *05*
U.S. Cl. D8—359

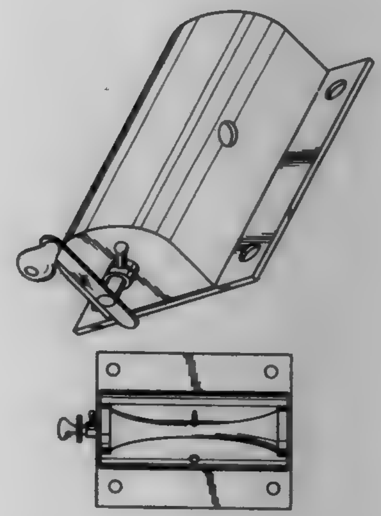

387,973
OUTDOOR SHOWER DOOR SLIDER
Charles H. Layman, 98 Sailfish Dr., East Falmouth, Mass. 02536
Filed Jun. 12, 1995, Ser. No. 40,188
Term of patent 14 years
LOC (6) Cl. 08 - *05*
U.S. Cl. D8—377

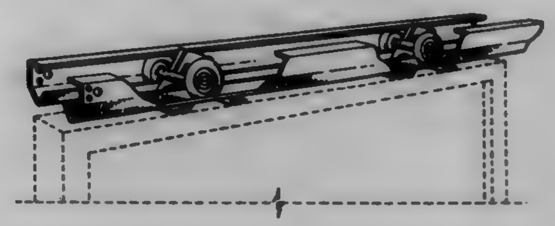

387,974
WINDOW TREATMENT ACCESSORY
Charles F. Smiley, Waunakee, and Cindy R. Jaggi, Verona, both of Wis., assignors to Springs Window Fashions Division, Inc., Middleton, Wis.
Filed Feb. 28, 1997, Ser. No. 67,615
Term of patent 14 years
LOC (6) Cl. 08 - *05*
U.S. Cl. D8—378

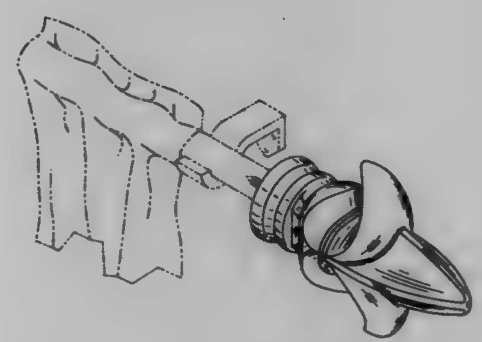

387,975
Patent Not Issued For This Number

387,976
CASE FOR A DISK-TYPE RECORDING MEDIUM
Takanori Mori, 22-12, Igusa 3-chome, Suginami-ku, Tokyo-to, Japan
Filed Apr. 1, 1996, Ser. No. 52,494
Claims priority, application Japan, Nov. 9, 1995, 7-33840; Nov. 9, 1995, 7-33841
Term of patent 14 years
LOC (6) Cl. 09 - *03*
U.S. Cl. D9—346

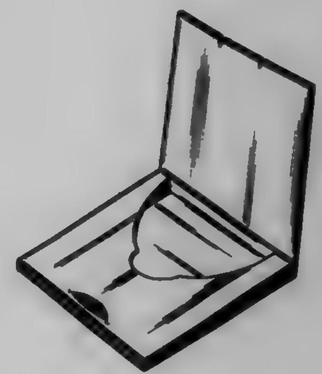

387,977
BLISTER PACK
Eva Källgren, Hägersten, Sweden, assignor to Astra Aktiebolag, Sodertalje, Sweden
Filed Dec. 18, 1995, Ser. No. 47,993
Claims priority, application Sweden, Jun. 30, 1995, 95-1315
Term of patent 14 years
LOC (6) Cl. 09 - *03*
U.S. Cl. D9—348

387,978
TUBING CLAMP FOR STAINLESS STEEL
Phillip A. McNally, Jr., 6763 N. 85th Dr., Glendale, Ariz. 85305
Filed Mar. 5, 1996, Ser. No. 51,301
Term of patent 14 years
LOC (6) Cl. 08 - 05
U.S. Cl. D8—356

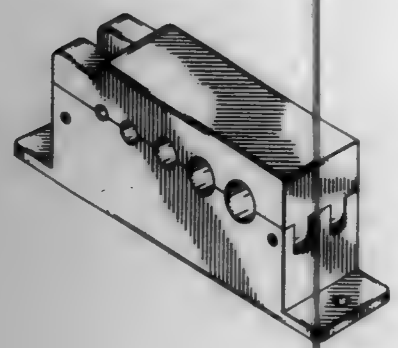

387,979
DISPLAY CONTAINER FOR DENTAL FLOSS PACKAGES
John W. Dolan, Boothwyn, Pa., assignor to W. L. Gore & Associates, Inc., Newark, Del.
Filed Dec. 6, 1996, Ser. No. 63,406
Term of patent 14 years
LOC (6) Cl. 09 - 07
U.S. Cl. D9—415

387,980
BELT HANGER
Susan Snitzer, 27 Byfield St., Bristol, R.I. 02809, and Peter Hall, 376 Brown Ave., Seekonk, Mass. 02771
Filed Apr. 29, 1997, Ser. No. 69,932
Term of patent 14 years
LOC (6) Cl. 09 - 07
U.S. Cl. D9—415

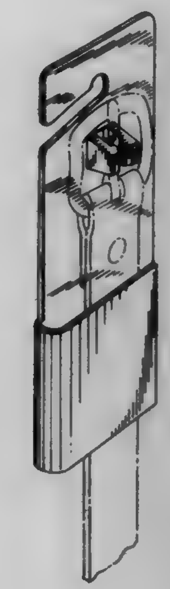

387,981
GLOVE DISPENSER
Donald J. Moslor, Lake Geneva, Wis.; Lawrence G. Ponsi, Wheeling, and John O'Daniel, Lake Barrington, both of Ill., assignors to Sage Products, Inc., Crystal Lake, Ill.
Filed Oct. 5, 1995, Ser. No. 46,564
Term of patent 14 years
LOC (6) Cl. 09 - 07
U.S. Cl. D9—418

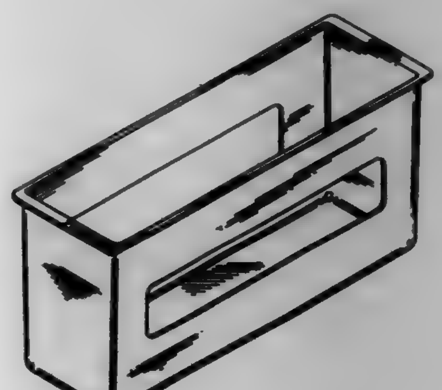

387,982
WATCH BOX
Michael Kaplan, New Rochelle, N.Y., assignor to Rocket Jewelry Box, Inc., Bronx, N.Y.
Filed Mar. 4, 1996, Ser. No. 51,162
Term of patent 14 years
LOC (6) Cl. 09 - 07
U.S. Cl. D9—423

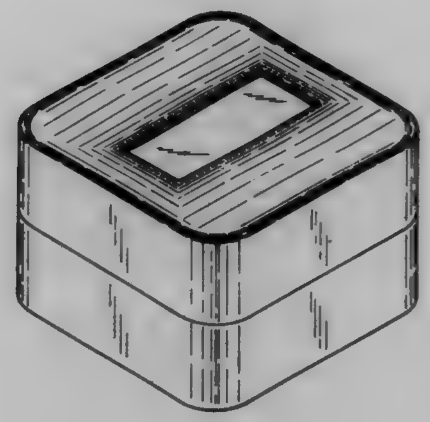

387,983
PACKAGE FOR WRITING INSTRUMENTS
Louis A. Lanoie, West Warwick, R.I., assignor to Phenix Group, Inc., West Warwick, R.I.
Filed Apr. 3, 1996, Ser. No. 52,321
Term of patent 14 years
LOC (6) Cl. 09 - 07
U.S. Cl. D9—424

387,984
ORNAMENTAL OCTAGONAL BOX
Francis Michael Magister, Murraysville, Pa., assignor to Victorian Gift Box, Inc., Murrysville, Pa.
Filed Dec. 12, 1995, Ser. No. 47,727
Term of patent 14 years
LOC (6) Cl. 09 - 07
U.S. Cl. D9—430

387,985

Patent Not Issued For This Number

387,986
LID FOR A FOOD CONTAINER
Thomas J. Hayes, Wauconda; Michael J. A. Sagan, Batavia; James N. Gomoll, Chicago, all of Ill., and Mark Spencer, Pittsford, N.Y., assignors to Tenneco Packaging, Evanston, Ill.
Filed Sep. 24, 1996, Ser. No. 60,177
Term of patent 14 years
LOC (6) Cl. 09 - 07
U.S. Cl. D9—435

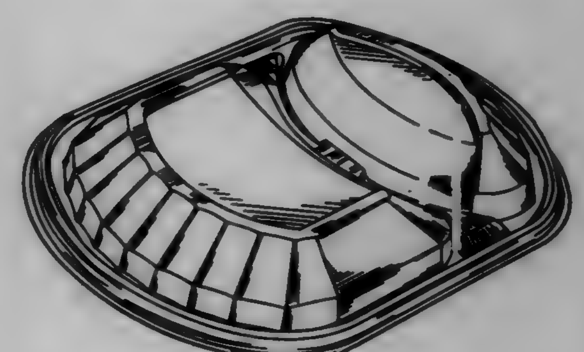

387,987

END CLOSURE FOR A CONTAINER

Christopher G. Neiner, St. Louis County, Mo., assignor to Metal Container Corporation, St. Louis, Mo.

Filed Nov. 14, 1996, Ser. No. 62,392

Term of patent 14 years

LOC (6) Cl. 09 - *07*

U.S. Cl. D9—438

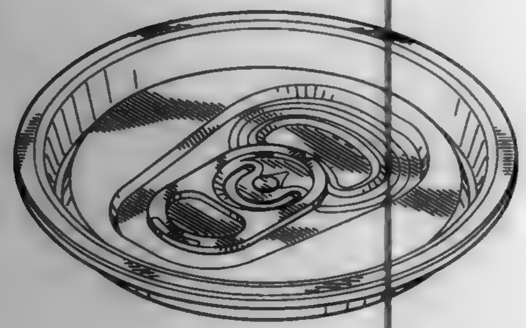

387,988

COMBINED BOTTLE, DISPENSING CLOSURE AND TRAVEL CAP

Timothy E. Fitten, Chaska, Minn.; Dieter F. Lay, Oconomowoc, Wis., and Thomas M. Bender, Reading, Pa., assignors to Redmond Products, Inc., Chanhassen, Minn.

Filed May 3, 1995, Ser. No. 38,325

The portion of the term of this patent subsequent to Nov. 18, 2011, has been disclaimed.

Term of patent 14 years

LOC (6) Cl. 09 - *01*

U.S. Cl. D9—504

387,989

COMBINED PERFUME BOTTLE AND CLOSURE

Khaled Chahed, Paris, France, assignor to Parfums Jean Jacques Vivier, Saint Maur, France

Filed Dec. 5, 1996, Ser. No. 63,340

Claims priority, application France, Jun. 14, 1996, 96 3524

Term of patent 14 years

LOC (6) Cl. 09 - *01*

U.S. Cl. D9—517

387,990

COMBINED CONTAINER AND CAP FOR HYGIENIC AND COSMETIC PRODUCTS

Pierre Dinand, Levallois Perret, France, assignor to Euroitalia S.r.l., Monza, Italy

Filed Nov. 13, 1995, Ser. No. 46,808

Claims priority, application Italy, Jun. 19, 1995, MI9500358

The portion of the term of this patent subsequent to Feb. 13, 2010, has been disclaimed.

Term of patent 14 years

LOC (6) Cl. 09 - *01*

U.S. Cl. D9—519

387,991

COMBINED PERFUME BOTTLE AND CLOSURE

Khaled Chahed, Paris, France, assignor to Parfums Jean Jacques Vivier, Saint Maur, France

Filed Dec. 5, 1996, Ser. No. 63,342

Claims priority, application France, Jun. 10, 1996, 96 3407

Term of patent 14 years

LOC (6) Cl. 09 - *01*

U.S. Cl. D9—519

387,992

BOTTLE BODY WITH BEVELED END

Randolf C. Kotoucek, St. Louis, Mo., assignor to Kranson Industries, Inc., St. Louis, Mo.

Filed Aug. 6, 1996, Ser. No. 58,027

Term of patent 14 years

LOC (6) Cl. 09 - *01*

U.S. Cl. D9—521

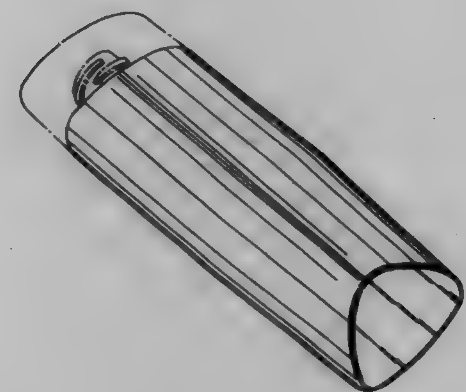

387,993

COMBINED BOTTLE AND CAP

Bradley P. Workman, and Kenneth H. Nilssen, both of New York, N.Y., assignors to Bath & Body Works, Inc., Reynoldsburg, Ohio

Filed Dec. 4, 1996, Ser. No. 63,304

Term of patent 14 years

LOC (6) Cl. 09 - *01*

U.S. Cl. D9—542

387,994

SIDEWALL FOR A BOTTLE

Carl Aug Heinz, Tettau-Ofr, Germany, assignor to Heinz Glashuttenwerke GmbH & Co. KG, Tettau-Ofr, Germany

Division of Ser. No. 40,646, Jun. 20, 1995, abandoned, which is a division of Ser. No. 5,324, Feb. 23, 1993, Pat. No. Des. 359,690. This application Apr. 26, 1996, Ser. No. 53,639

Claims priority, application Hague Agreement, Aug. 24, 1992, DM/023692

Term of patent 14 years

LOC (6) Cl. 09 - *01*

U.S. Cl. D9—545

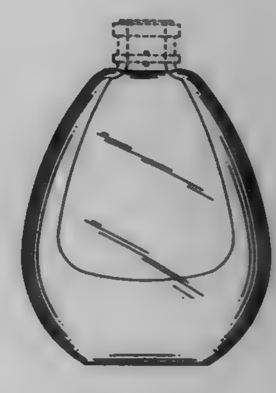

387,995
COMBINED BOTTLE AND CAP
Earl Hoyt, Woodstock, N.Y., assignor to After Shave Products, Inc., Newark, Del.
Filed Dec. 4, 1996, Ser. No. 6[illegible],297
Term of patent 14 years
LOC (6) Cl. 09 - *01*
U.S. Cl. D9—566

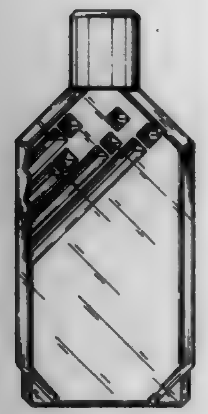

387,996
CLOCK
Raymond Chan, Kowloon, Hong Kong, assignor to IDT International Limited, Hamilton, Bermuda
Filed Aug. 22, 1996, Ser. No. 58,780
Term of patent 14 years
LOC (6) Cl. 10 - *01*
U.S. Cl. D10—18

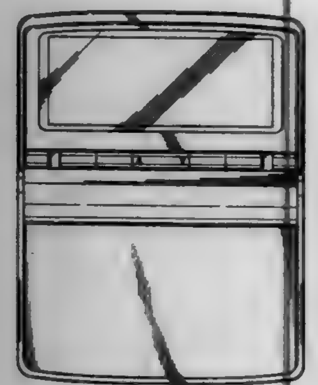

387,997
WATCHCASE
Toshiyuki Dobashi, Chiba, Japan, assignor to Seiko Instruments Inc., Japan
Filed May 29, 1996, Ser. No. 55,108
Term of patent 14 years
LOC (6) Cl. 10 - *02*
U.S. Cl. D10—30

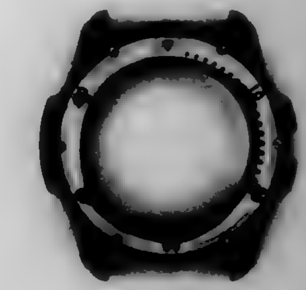

387,998
ANALOG-DIGITAL COMBINATION WATCH CASING
Galileo P. Ramos, Jr., Lapu-lapu, Philippines, and David Quinlan, Marion, Conn., assignors to Timer Corporation, Middlebury, Conn.
Filed Jul. 1, 1996, Ser. No. 56,470
Term of patent 14 years
LOC (6) Cl. 10 - *02*
U.S. Cl. D10—30

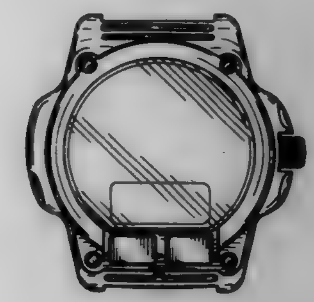

387,999
CASING FOR A WATCH
Lani Encena Cobarrubias, Matumbo Hills, Philippines, assignor to Timex Corporation, Middlebury, Conn.
Filed Jul. 3, 1996, Ser. No. 56,600
Term of patent 14 years
LOC (6) Cl. 10 - *02*
U.S. Cl. D10—30

388,000
WATCH CASE
Giuliano Molineri, Turin, Italy, assignor to Kabushiki Kaisha Hattori Seiko, Tokyo, Japan
Filed Jul. 30, 1996, Ser. No. 57,680
Claims priority, application Japan, Jan. 31, 1996, 8-2317
Term of patent 14 years
LOC (6) Cl. 10 - *02*
U.S. Cl. D10—30

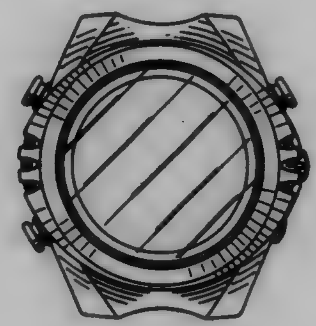

388,001
WATCH
Severin S. Wunderman, Irvine, Calif., assignor to Severin Montres AG (Severin Montres SA) (Severin Montres Ltd), Lengnau, Switzerland
Filed Jun. 19, 1995, Ser. No. 40,469
Claims priority, application Western Sahara, Feb. 20, 1995, DMA/002 791
Term of patent 14 years
LOC (6) Cl. 10 - *02*
U.S. Cl. D10—39

388,002
DOMINO SCOREKEEPING BOARD AND STORAGE CASE
Marie Caesar, 8929 Rockledge Dr., Dallas, Tex. 75217
Filed Feb. 7, 1997, Ser. No. 66,211
Term of patent 14 years
LOC (6) Cl. 21 - *01*
U.S. Cl. D10—46.1

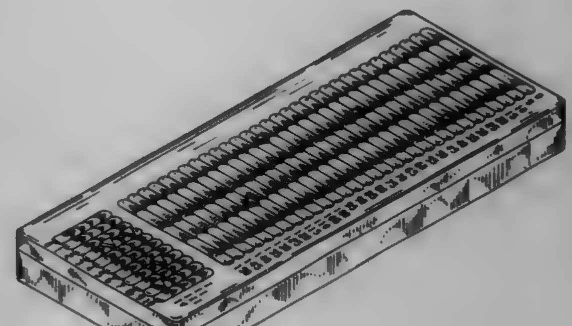

388,003
KITCHEN SCALE
Nicolaus Bachmayer, Stuttgart, Germany, assignor to Soehnle-Waagen GmbH & Co., Murrhardt, Germany
Filed Jul. 12, 1996, Ser. No. 56,953
Claims priority, application WIPO, Jan. 15, 1996, DM/035110
Term of patent 14 years
LOC (6) Cl. 10 - *04*
U.S. Cl. D10—91

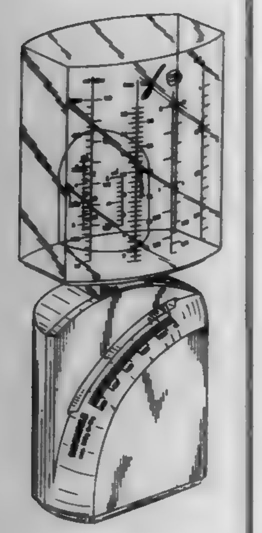

388,004
ELECTRONIC PERSONAL WEIGHING SCALES
Patrick Juteau, Rumilly, France, assignor to Tefal S.A., Rumilly, France
Filed Aug. 13, 1996, Ser. No. 58,635
Claims priority, application France, Feb. 23, 1996, 961148
Term of patent 14 years
LOC (6) Cl. 10 - *04*
U.S. Cl. D10—92

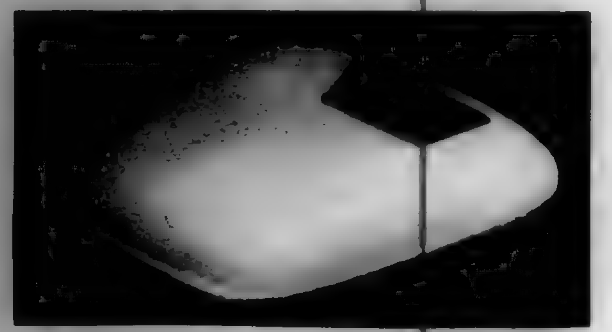

388,005
REMOTE CONTROL TRANSMITTER FOR TURNING ON WILD GAME FEEDERS
James A. Henderson, 314 Bayless, Duncanville, Tex. 75116
Filed Feb. 17, 1994, Ser. No. 18,935
Term of patent 14 years
LOC (6) Cl. 14 - *02*
U.S. Cl. D10—104

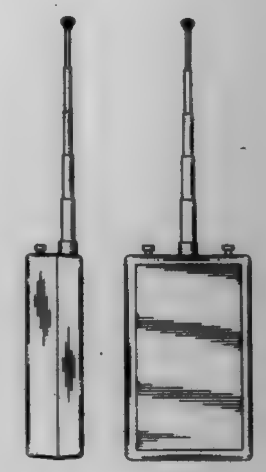

388,006
MINIATURE PERSONAL ALARM
John Alfred Worthington, Bandy Hill Cottage, Haultwick, Ware, Hertfordshire, England, SG11 1JF
Filed Jun. 22, 1995, Ser. No. 40,632
Claims priority, application United Kingdom, Dec. 22, 1994, 2044209
Term of patent 14 years
LOC (6) Cl. 10 - *05*
U.S. Cl. D10—106

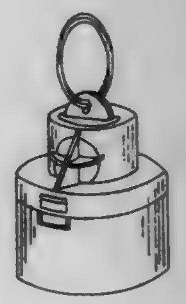

388,007
SIGNALING FLASHING STROBE LIGHT
Arnold Koski, 2580 Willis St., Portage, Ind. 46368
Filed Jan. 7, 1997, Ser. No. 64,614
Term of patent 14 years
LOC (6) Cl. 10 - *05*
U.S. Cl. D10—114

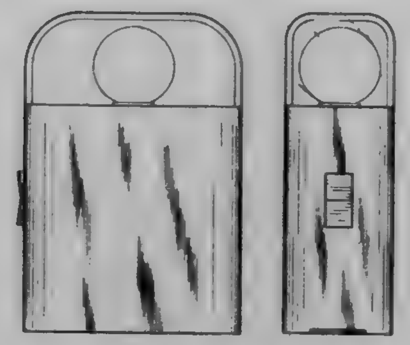

388,008
WATCH BEZEL
Daniel Lai Kong Sang, Ma On Shan, Hong Kong, assignor to Timex Corporation, Middlebury, Conn.
Filed Jul. 31, 1996, Ser. No. 57,780
Term of patent 14 years
LOC (6) Cl. 10 - *02*
U.S. Cl. D10—128

388,009
BEZEL RING FOR A WATCH
Rolando Rico L. Campilan, Cebu, Philippines, assignor to Timex Corporation, Middlebury, Conn.
Filed Nov. 5, 1996, Ser. No. 61,979
Term of patent 14 years
LOC (6) Cl. 10 - *02*
U.S. Cl. D10—128

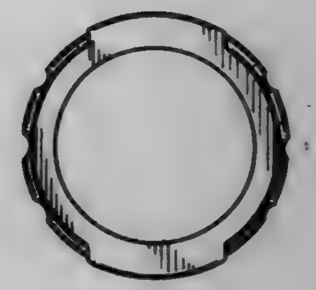

388,010
RING
Caroline Scheufele, Prangins, Switzerland, assignor to Chopard Holding S.A., Fribourg, Switzerland
Filed Oct. 24, 1995, Ser. No. 45,569
Claims priority, application Switzerland, Apr. 25, 1995, DMA/032 901
Term of patent 14 years
LOC (6) Cl. 11 - *01*
U.S. Cl. D11—26

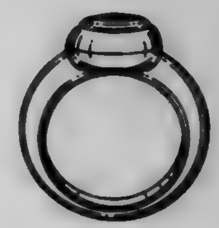

388,011
DECORATIVE CONNECTOR BETWEEN AN EARRING AND A HAIR APPLIANCE
Grace Leonard, 525 Dandelion Rd., Corrales, N. Mex. 87048
Continuation-in-part of Ser. No. 30,364, Oct. 27, 1994, abandoned. This application Nov. 8, 1995, Ser. No. 46,144
Term of patent 14 years
LOC (6) Cl. 11 - *01*
U.S. Cl. D11—40

388,012
EARRING
Randy P. Matye, 6102 Ridge Vale, San Antonio, Tex. 78250
Continuation-in-part of Ser. No. 32,655, Dec. 22, 1994, Pat. No. Des. 380,978. This application Sep. 19, 1995, Ser. No. 44,143
Term of patent 14 years
LOC (6) Cl. 11 - *01*
U.S. Cl. D11—44

388,013
SPORTS CARD EARRING
Joan K. Rich, 5094 Balsam Ave., Duluth, Minn. 55804
Filed Apr. 10, 1996, Ser. No. 52,864
Term of patent 14 years
LOC (6) Cl. 11 - *01*
U.S. Cl. D11—48

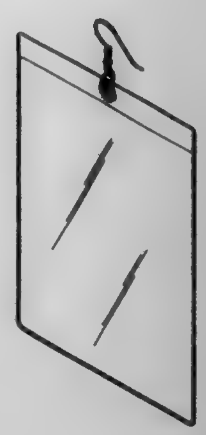

388,014
JEWELRY PENDANT
Afram Koumi, 17 Alwyn Tr., Rutherford, N.J. 07070
Filed May 23, 1996, Ser. No. 54,847
The portion of the term of this patent subsequent to Sep. 16, 2011, has been disclaimed.
Term of patent 14 years
LOC (6) Cl. 11 - *01*
U.S. Cl. D11—83

388,015
COMBINED GEMSTONE AND SETTING
Israel Itzkowitz, N. Hollywood, Calif., assignor to Ambar Diamonds Inc., Los Angeles, Calif.
Filed Apr. 23, 1996, Ser. No. 53,469
Term of patent 14 years
LOC (6) Cl. 11 - *01*
U.S. Cl. D11—90

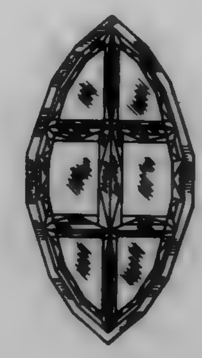

388,016
NINE GEMSTONE PENDANT SETTING
Toros Kejejian, Northridge, Calif., assignor to Tycoon Jewelry, Inc., Los Angeles, Calif.
Filed Dec. 6, 1996, Ser. No. 63,370
Term of patent 14 years
LOC (6) Cl. 11 - *01*
U.S. Cl. D11—91

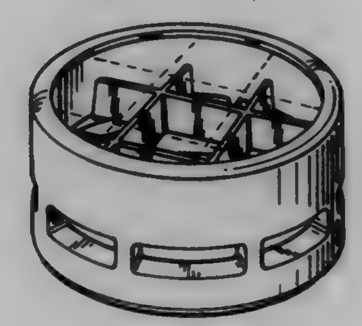

388,017
FOUR GEMSTONE PENDANT SETTING
Toros Kejejian, Northridge, Calif., assignor to Tycoon Jewelry, Inc., Los Angeles, Calif.
Filed Dec. 6, 1996, Ser. No. 63,377
Term of patent 14 years
LOC (6) Cl. 11 - *01*
U.S. Cl. D11—91

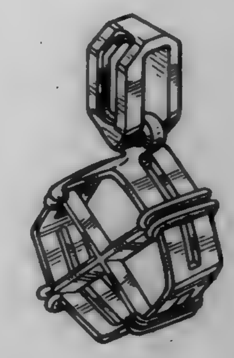

388,018
FLOWER POT COVER
Donald E. Weder, and Joseph G. Straeter, both of Highland, Ill., assignors to Southpac Trust International, Inc.
Division of Ser. No. 808,562, Dec. 16, 1991, Pat. No. Des. 361,297, which is a continuation-in-part of Ser. No. 710,272, Jun. 4, 1991, Pat. No. Des. 365,302, which is a continuation-in-part of Ser. No. 617,454, Nov. 21, 1990, abandoned, Ser. No. 411,249, Sep. 22, 1989, Pat. No. Des. 358,113, Ser. No. 411,247, Sep. 22, 1989, abandoned, and Ser. No. 411,245, Sep. 22, 1989, abandoned. This application Jun. 28, 1995, Ser. No. 40,937
Term of patent 14 years
LOC (6) Cl. 11 - *02*
U.S. Cl. D11—164

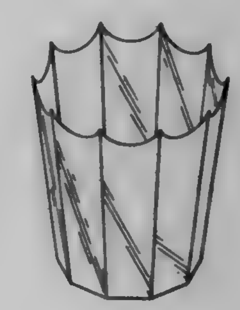

388,019
FLOWER POT COVER

Donald E. Weder, and Joseph G. Straeter, both of Highland, Ill., assignors to Southpac Trust International, Inc.

Division of Ser. No. 26,208, Jul. 21, 1994, Pat. No. Des. 366,631, which is a continuation of Ser. No. 543,628, Jun. 26, 1990, abandoned, which is a continuation-in-part of Ser. No. 411,247, Sep. 22, 1989, abandoned, which is a continuation of Ser. No. 283,014, Dec. 8, 1988, abandoned, which is a continuation of Ser. No. 652,903, Sep. 21, 1984, abandoned, and a continuation-in-part of Ser. No. 613,053, May 22, 1984, Pat. No. Des. 293,224. This application Nov. 2, 1995, Ser. No. 45,923

Term of patent 14 years
LOC (6) Cl. 11 - *02*

U.S. Cl. D11—164

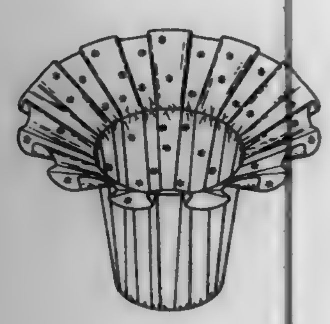

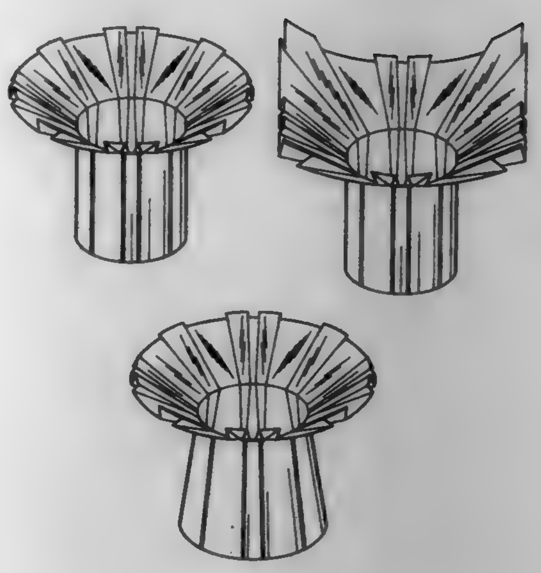

388,020
FLOWER POT COVER

Donald E. Weder, and Joseph G. Straeter, both of Highland, Ill., assignors to Southpac Trust International, Inc., Oklahoma City, Okla., not individually, but as trustee of The Family Trust U/T/A dated Dec. 8, 1995, Charles A. Codding, Authorized Signatory for Southpac Trust International, Inc. Trustee

Division of Ser. No. 2,915, Dec. 23, 1992, Pat. No. Des. 364,584, which is a continuation-in-part of Ser. No. 808,566, Dec. 16, 1991, Pat. No. Des. 352,918, which is a continuation-in-part of Ser. No. 710,272, Jun. 4, 1991, Pat. No. Des. 365,302, which is a continuation-in-part of Ser. No. 617,454, Nov. 21, 1990, abandoned, said Ser. No. 710,272is a continuation-in-part of Ser. No. 411,249, Sep. 22, 1989, Pat. No. Des. 358,113, Ser. No. 411,247, Sep. 22, 1989, abandoned, and Ser. No. 411,245, Sep. 22, 1989, abandoned. This application Nov. 7, 1995, Ser. No. 46,088

The portion of the term of this patent subsequent to Nov. 29, 2011, has been disclaimed.

Term of patent 14 years
LOC (6) Cl. 11 - *02*

U.S. Cl. D11—164

388,021
FLOWER POT COVER

Donald E. Weder, and Joseph G. Straeter, both of Highland, Ill., assignors to Southpac Trust International, Inc.

Division of Ser. No. 8,174, May 10, 1993, Pat. No. Des. 372,439, which is a continuation-in-part of Ser. No. 808,550, Dec. 16, 1991, Pat. No. Des. 361,296, which is a continuation-in-part of Ser. No. 710,272, Jun. 4, 1991, Pat. No. Des. 365,302, which is a continuation-in-part of Ser. No. 617,452, Nov. 21, 1990, abandoned, which is a continuation-in-part of Ser. No. 411,249, Sep. 22, 1989, Pat. No. Des. 358,113, Ser. No. 411,247, Sep. 22, 1989, abandoned, and Ser. No. 411,245, Sep. 22, 1989, abandoned. This application Feb. 29, 1996, Ser. No. 53,850

The portion of the term of this patent subsequent to Jul. 22, 2011, has been disclaimed.

Term of patent 14 years
LOC (6) Cl. 11 - *02*

U.S. Cl. D11—164

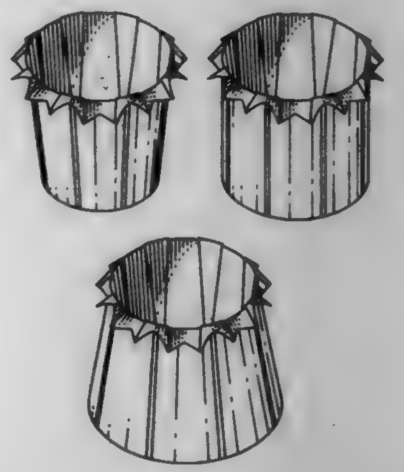

388,022
SLIDE FASTENER SLIDER

Iwao Yaguramaki, Namerikawa, Japan, assignor to YKK Corporation, Tokyo, Japan

Filed Sep. 16, 1996, Ser. No. 59,780

Claims priority, application Japan, Mar. 15, 1996, 8-7133

Term of patent 14 years
LOC (6) Cl. 02 - *07*

U.S. Cl. D11—221

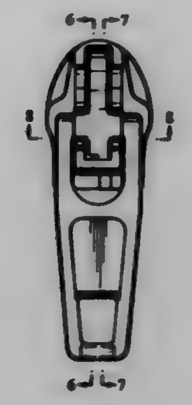

388,023
VENDING CART

Alan A. Genovese, 1302 Clarkson Clayton Center, Suite 209, Ellisville, Mo. 63011

Filed Mar. 29, 1996, Ser. No. 52,420

Term of patent 14 years
LOC (6) Cl. 12 - *14*

U.S. Cl. D12—1

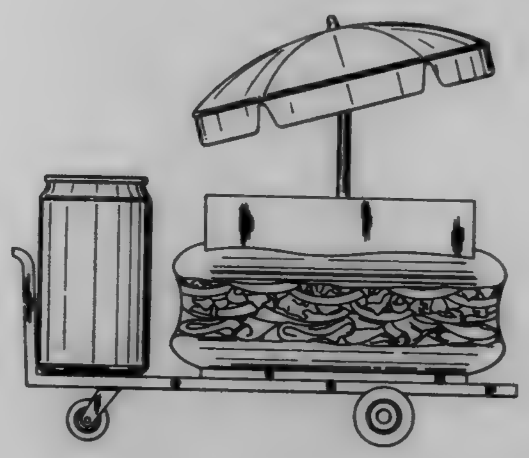

388,024
SIDE WALL FOR A SPREAD AXLE TRAILER

Conrad Dean Clement, Rochester, Minn., assignor to Featherlite Mfg., Inc., Cresco, Iowa

Continuation of Ser. No. 17,974, Jan. 25, 1994, abandoned. This application Jan. 19, 1996, Ser. No. 48,928

Term of patent 14 years
LOC (6) Cl. 12 - *08*

U.S. Cl. D12—97

388,025
BICYCLE FRAME

Eugene Sauer, Main St., Blairs Mills, Pa. 17213

Filed Jan. 5, 1995, Ser. No. 33,111

Term of patent 14 years
LOC (6) Cl. 12 - *11*

U.S. Cl. D12—111

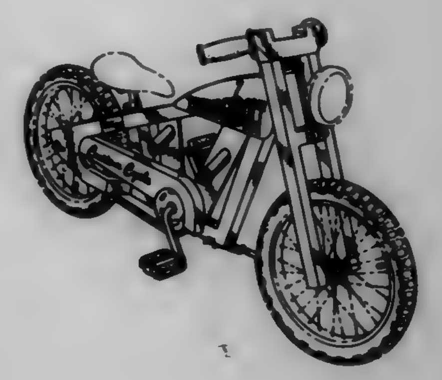

388,026

ATV (ALL-TERRAIN VEHICLE) HANDLEBAR MUFF

Billy J. DeFur, 2409 Ashmore Ave., Chattanooga, Tenn. 37415

Filed Oct. 2, 1996, Ser. No. 60,611

Term of patent 14 years

LOC (6) Cl. 12 - *11*

U.S. Cl. D12—114

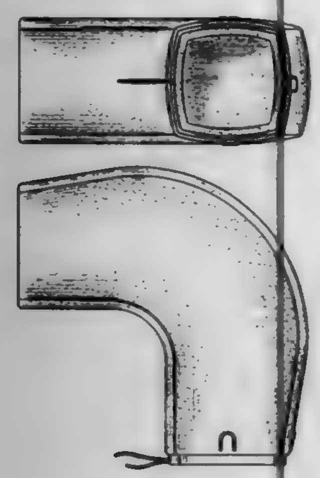

388,027

ANTIQUE SPORT VEHICLE STROLLER

John C. Polak; Antoinette M. Polak; M. Darlene Polak, and M. Antoinette Polak, all of 6748 Del Cerro Blvd., San Diego, Calif. 92120

Filed Oct. 8, 1996, Ser. No. 60,986

Term of patent 14 years

LOC (6) Cl. 12 - *12*

U.S. Cl. D12—129

388,028

TIRE TREAD

Billy Joe Ratliff, Jr., Akron, Ohio, assignor to The Goodyear Tire & Rubber Company, Akron, Ohio

Filed Dec. 18, 1996, Ser. No. 63,909

Term of patent 14 years

LOC (6) Cl. 12 - *15*

U.S. Cl. D12—136

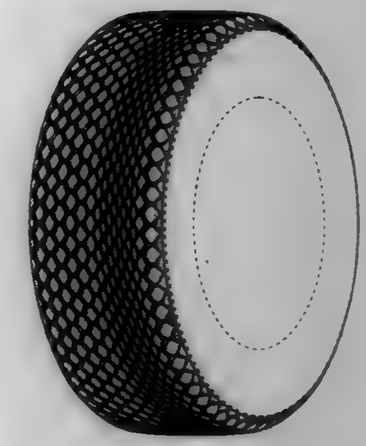

388,029

TIRE TREAD

Billy Joe Ratliff, Jr., Akron, Ohio, assignor to The Goodyear Tire & Rubber Company, Akron, Ohio

Filed Dec. 18, 1996, Ser. No. 63,917

Term of patent 14 years

LOC (6) Cl. 12 - *15*

U.S. Cl. D12—136

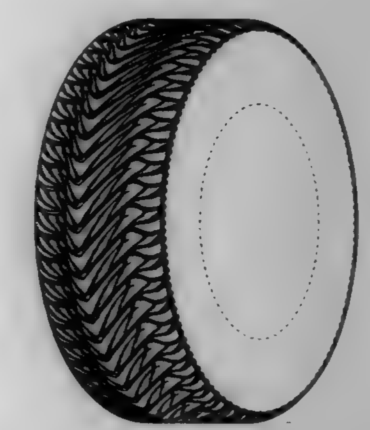

388,030

TIRE TREAD

Daniel Edward Schuster, North Royalton, Ohio, assignor to The Goodyear Tire & Rubber Company, Akron, Ohio

Filed Jan. 22, 1997, Ser. No. 65,463

Term of patent 14 years

LOC (6) Cl. 12 - *15*

U.S. Cl. D12—142

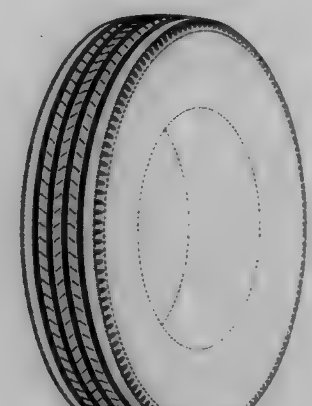

388,031

TIRE TREAD

Ronald Lawrence Loeffler, Akron; Deborah Lynn Young, Copley, and Daniel Edward Schuster, North Royalton, all of Ohio, assignors to The Goodyear Tire & Rubber Company, Akron, Ohio

Filed Jan. 25, 1996, Ser. No. 49,453

The portion of the term of this patent subsequent to Feb. 27, 2010, has been disclaimed.

Term of patent 14 years

LOC (6) Cl. 12 - *15*

U.S. Cl. D12—143

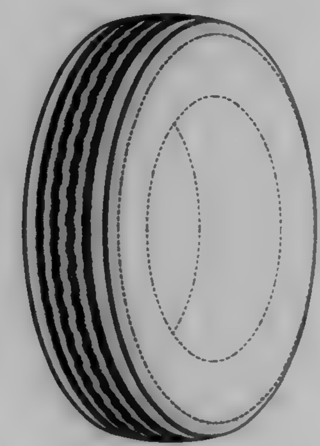

388,032

TREAD FOR A TIRE

Mark Leonard Bonko, Uniontown, Ohio, assignor to The Goodyear Tire & Rubber Company, Akron, Ohio

Filed Aug. 29, 1996, Ser. No. 58,943

Term of patent 14 years

LOC (6) Cl. 12 - *15*

U.S. Cl. D12—146

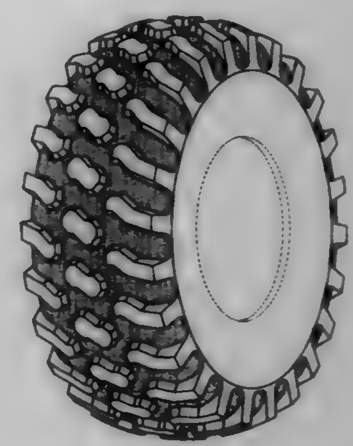

388,033

TIRE TREAD

Daniel Scheuren, Bastogne, Belgium; Jean Francois Cazin-Bourguignon, Audun-le-Tiche, France; Michel Pierre Charles Robert, Fauvillers, Belgium, and Olivier de Barsy, Mersch, Luxembourg, assignors to The Goodyear Tire & Rubber Company, Akron, Ohio

Filed Sep. 16, 1996, Ser. No. 59,756

Term of patent 14 years

LOC (6) Cl. 12 - *15*

U.S. Cl. D12—146

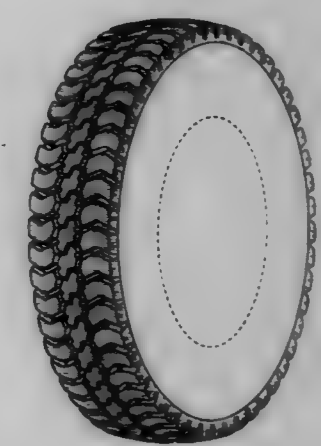

388,034
TIRE TREAD
Phuoc Thuan Le, Attert, and Jacques Collette, Bastogne, both of Belgium, assignors to The Goodyear Tire & Rubber Company, Akron, Ohio
Filed Jan. 31, 1997, Ser. No. 65,645
Term of patent 14 years
LOC (6) Cl. 12 - *15*
U.S. Cl. D12—146

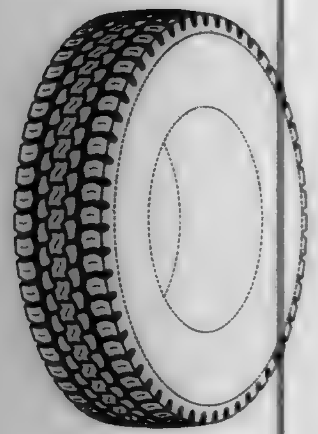

388,035
TIRE TREAD
Richard Heinen, Habay-La-Neuve, Belgium; Pierre Harpes, Luxembourg, Luxembourg; Alain Alphonse Zelie Samuel Klepper, and Bernard Croissant, both of Bastogne, Belgium, assignors to The Goodyear Tire & Rubber Company, Akron, Ohio
Continuation-in-part of Ser. No. 35,223, Feb. 15, 1995, abandoned. This application Nov. 7, 1995, Ser. No. 46,118
Term of patent 14 years
LOC (6) Cl. 12 - *15*
U.S. Cl. D12—147

388,036
TIRE HEAD
Christian Labbe, Meix-Le-Tige, and Claude Lardo, Walzing, both of Belgium, assignors to The Goodyear Tire & Rubber Company, Akron, Ohio
Filed Jul. 1, 1996, Ser. No. 59,648
Term of patent 14 years
LOC (6) Cl. 12 - *15*
U.S. Cl. D12—147

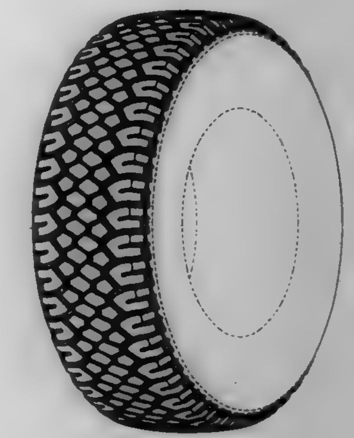

388,037
TIRE TREAD
Efimia Ellen Rohweder, Uniontown; Frederick William Miller, Akron; Michael Alois Kolowski, Mogadore; Stephanie Carol Brown, Akron, and Paul Bryan Maxwell, Munroe, all of Ohio, assignors to The Goodyear Tire & Rubber Company, Akron, Ohio
Continuation-in-part of Ser. No. 50,569, Jan. 25, 1996, abandoned. This application Dec. 6, 1996, Ser. No. 63,420
Term of patent 14 years
LOC (6) Cl. 12 - *15*
U.S. Cl. D12—147

388,038
TIRE TREAD
Billy Joe Ratliff, Jr., Akron, Ohio, assignor to The Goodyear Tire & Rubber Company, Akron, Ohio
Filed Dec. 18, 1996, Ser. No. 63,910
Term of patent 14 years
LOC (6) Cl. 12 - *15*
U.S. Cl. D12—147

388,039
TIRE TREAD
Billy Joe Ratliff, Jr., Akron, Ohio, assignor to The Goodyear Tire & Rubber Company, Akron, Ohio
Filed Dec. 18, 1996, Ser. No. 63,916
Term of patent 14 years
LOC (6) Cl. 12 - *15*
U.S. Cl. D12—147

388,040
TIRE TREAD
Olivier de Barsy, Kleinbettingen, Luxembourg, assignor to The Goodyear Tire & Rubber Company, Akron, Ohio
Filed Jan. 2, 1997, Ser. No. 64,472
Term of patent 14 years
LOC (6) Cl. 12 - *15*
U.S. Cl. D12—147

388,041
SURFACE PATTERN FOR A TIRE SIDEWALL
Jesse L. Cross, 19005 103rd Pl. SE., Renton, Wash. 98055
Filed Oct. 3, 1996, Ser. No. 60,654
Term of patent 14 years
LOC (6) Cl. 12 - *15*
U.S. Cl. D12—152

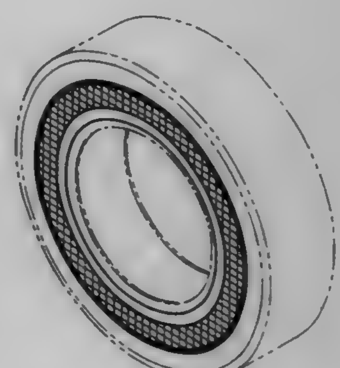

388,042

GRILLE GUARD

Nicholas Thorne, Simi Valley, and Marcus Meakin, Los Angeles, both of Calif., assignors to Manik Motors, Inc., Los Angeles, Calif.

Filed Jul. 5, 1996, Ser. No. 56,681

Term of patent 14 years

LOC (6) Cl. 12 - *16*

U.S. Cl. D12—171

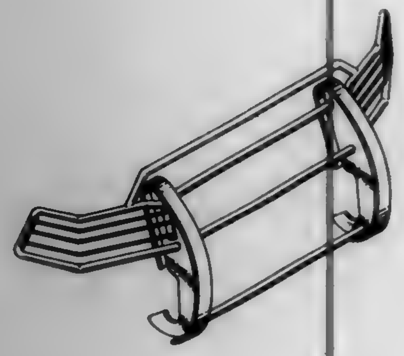

388,043

DECORATIVE TOP EDGE COVER FOR PICKUP TRUCK SIDE WALLS

Dennis L. Elwell, Ankeny, and Robert L. Sills, Story City, both of Iowa, assignors to Putco, Inc., Story City, Iowa

Filed Apr. 24, 1996, Ser. No. 53,538

Term of patent 14 years

LOC (6) Cl. 12 - *16*

U.S. Cl. D12—190

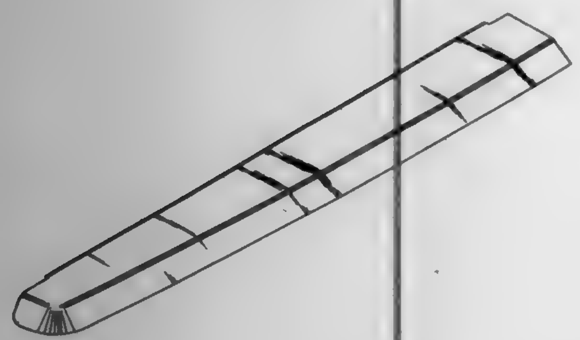

388,044

FRONT FACE OF A WHEEL COVER

Hans-Joachim Maier, Böblingen, Germany, assignor to Mercedes-Benz AG, Germany

Filed Oct. 10, 1995, Ser. No. 45,151

Claims priority, application Germany, Apr. 7, 1995, 95 02 922.2

Term of patent 14 years

LOC (6) Cl. 12 - *16*

U.S. Cl. D12—204

388,045

VEHICLE WHEEL

Tetsuya Sakagami, and Hitoshi Terao, both of Shizuoka-ken, Japan, assignors to Asahi Tec Corporation, Shizuoka-ken, Japan

Filed Apr. 10, 1991, Ser. No. 683,749

Claims priority, application Japan, Nov. 10, 1990, 2-37768; Nov. 10, 1990, 2-37769

Term of patent 14 years

LOC (6) Cl. 12 - *16*

U.S. Cl. D12—209

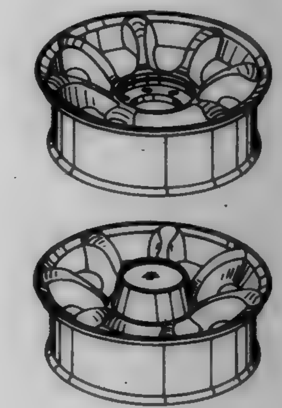

388,046

AUTOMOBILE AND TRUCK WHEEL

Anto Roesianto, Surabaya, Indonesia, assignor to PT Prima Alloy Steel Universal, Sidoarjo, Indonesia

Filed Oct. 4, 1995, Ser. No. 44,952

Term of patent 14 years

LOC (6) Cl. 12 - *16*

U.S. Cl. D12—209

388,047

MOTOR VEHICLE WHEEL FRONT FACE

Peter Pfeiffer, Boeblingen, and Bruno Sacco, Sindelfingen, both of Germany, assignors to Mercedes-Benz AG, Germany

Filed Apr. 5, 1995, Ser. No. 37,176

Claims priority, application Germany, Oct. 5, 1994, 94 07 736.3

Term of patent 14 years

LOC (6) Cl. 12 - *16*

U.S. Cl. D12—211

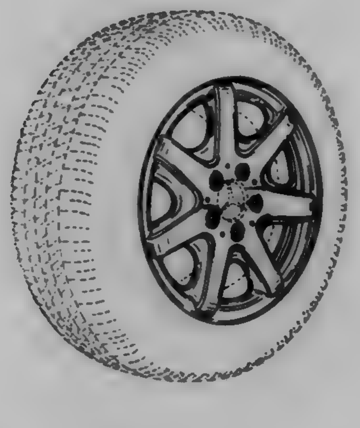

388,048

HELICOPTER

Rodney Sherwood Taylor; Bobby Alton Collins; Timothy Myron Hazen, all of Bedford, and Walter Charles Joiner, Arlington, all of Tex., assignors to Bell Helicopter Textron Inc., Fort Worth, Tex.

Filed May 13, 1996, Ser. No. 54,309

Term of patent 14 years

LOC (6) Cl. 12 - *07*

U.S. Cl. D12—328

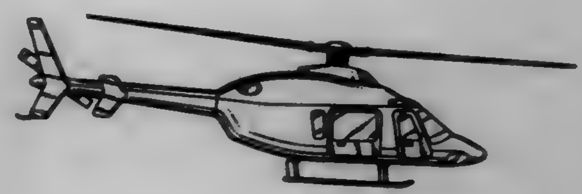

388,049

TRUCK CAP HAVING ACCESS DOORS

Charles P. Reardon, 2168 Ireton Trees Rd., Moscow, Ohio 45153

Filed Mar. 26, 1996, Ser. No. 52,243

Term of patent 14 years

LOC (6) Cl. 12 - *16*

U.S. Cl. D12—404

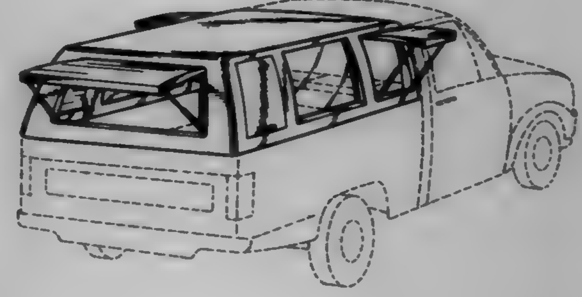

388,050
CONSOLE INSERT
David W. Diem, Newport Beach, Calif., assignor to Performance Marketing, Santa Ana, Calif.
Filed Feb. 5, 1996, Ser. No. 49,939
Term of patent 14 years
LOC (6) Cl. 12 - *16*
U.S. Cl. D12—419

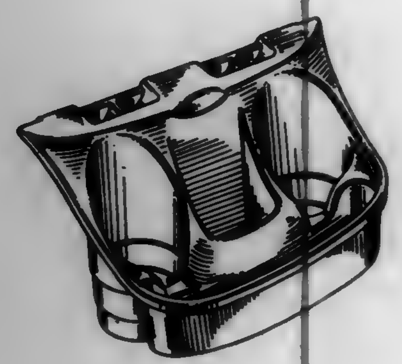

388,051
BATTERY
Keiichi Harada, Osaka; Noriko Himeda, Hyogo; Chikara Kasai, and Hitoshi Mikuriya, both of Kanagawa, all of Japan, assignors to Matsushita Electric Industrial Co., Ltd., Osaka, Japan
Filed Apr. 1, 1996, Ser. No. 52,608
Claims priority, application Japan, Oct. 13, 1995, 7-30620
Term of patent 14 years
LOC (6) Cl. 13 - *02*
U.S. Cl. D13—103

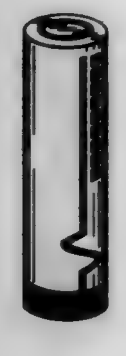

388,052
GROUNDING COMPONENT FOR ELECTRIC CABLES
Hans Olof Lundbäck, Sjuhult, Sweden, assignor to Teracom Components AB, Horby, Sweden
Filed Nov. 13, 1995, Ser. No. 46,806
Claims priority, application Sweden, May 19, 1995, 95-1029
Term of patent 14 years
LOC (6) Cl. 13 - *03*
U.S. Cl. D13—133

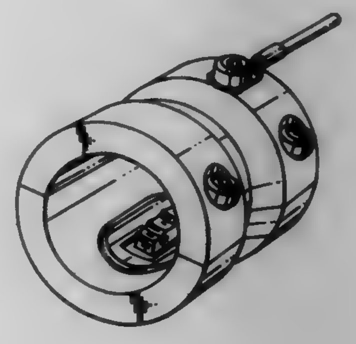

388,053
RADIO SIDE CONNECTOR
William H. Robertson, Jr., Plantation; Scott F. Musil, Margate, both of Fla.; Douglas D. Peebles, Keller, Tex., and David H. Karl, Ft. Lauderdale, Fla., assignors to Motorola, Inc., Schaumburg, Ill.
Filed Dec. 18, 1995, Ser. No. 48,022
Term of patent 14 years
LOC (6) Cl. 13 - *03*
U.S. Cl. D13—133

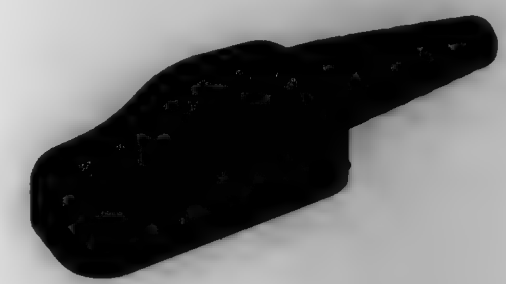

388,054
PLUG FOR APPARATUS INTAKE
Terje Eidsvig, Oslo, Norway, assignor to DEFA Group, A.S., Nesbyen, Norway
Filed Jan. 12, 1996, Ser. No. 48,736
Term of patent 14 years
LOC (6) Cl. 13 - *03*
U.S. Cl. D13—133

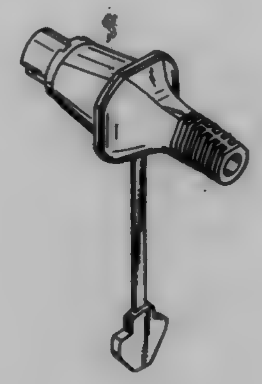

388,055
CONTROL CONSOLE FOR MAN-OPERATED MACHINE HAVING TILTABLE DISPLAY
Marco Mariotta, Losone, Switzerland, assignor to Agie, A.G. für Industrielle Elektronik, Losone, Switzerland
Filed Sep. 16, 1996, Ser. No. 59,144
Claims priority, application Hague Agreement, Mar. 14, 1996, DM/035900
Term of patent 14 years
LOC (6) Cl. 13 - *03*
U.S. Cl. D13—163

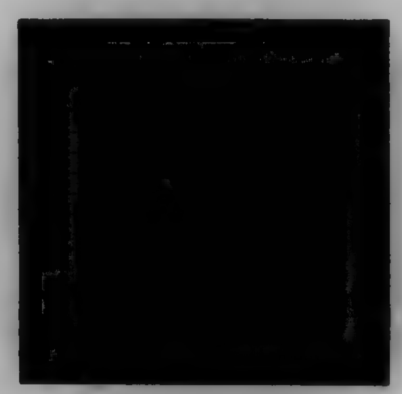

388,056
ACTUATOR FOR FOOT-OPERATED CONTROL SYSTEM
Frank M. Fago, Mason, and Brian J. Poland, Fairfield, both of Ohio, assignors to Liebel-Flarsheim Company, Cincinnati, Ohio
Filed Sep. 29, 1995, Ser. No. 44,757
Term of patent 14 years
LOC (6) Cl. 13 - *03*
U.S. Cl. D13—167

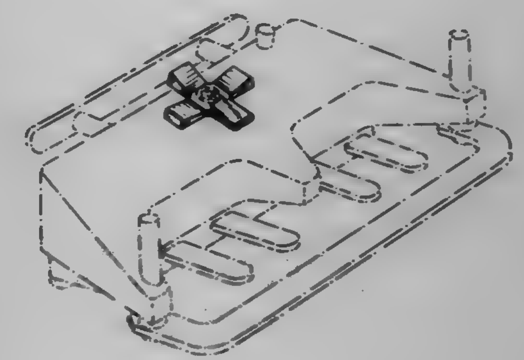

388,057
PAIR OF MOUSE DRAG BUTTONS
Nariaki Mieki, Yokohama, and Kazuhiko Yamazaki, Hiratsuka, both of Japan, assignors to International Business Machines Corporation, Armonk, N.Y.
Filed Oct. 20, 1995, Ser. No. 45,461
Claims priority, application Japan, Apr. 21, 1995, 7-11478
Term of patent 14 years
LOC (6) Cl. 14 - *02*
U.S. Cl. D14—114

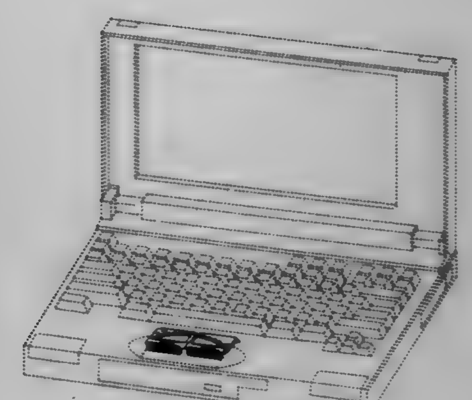

388,058
AUTOMOBILE TIRE
Kouya Hamamoto, Hiratsuka; Hiroshi Tokizaki, and Izumi Kuramochi, both of Tokyo, all of Japan, assignors to The Yokohama Rubber Co., Ltd., Tokyo, Japan
Filed Jun. 24, 1996, Ser. No. 56,080
Claims priority, application Japan, Dec. 27, 1995, 7-39084
Term of patent 14 years
LOC (6) Cl. 12 - *15*
U.S. Cl. D12—147

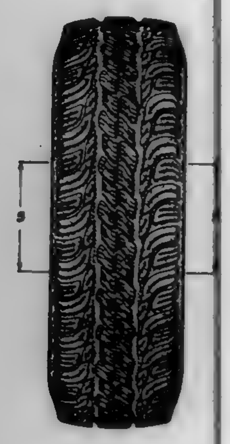

388,059
PAGER
Whitfield G. Halstead, Los Altos, and Henry Madden, Modesto, both of Calif., assignors to Wireless Access, Santa Clara, Calif.
Filed Oct. 10, 1995, Ser. No. 45,104
Term of patent 14 years
LOC (6) Cl. 14 - *03*
U.S. Cl. D14—191

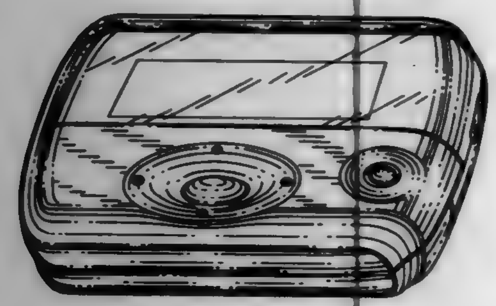

388,060
BATTERY
Yosuke Tanaka, Kobe; Shigehiro Uemura, Kyoto; Toshio Hara, Moriguchi, and Kazuo Takada, Nara, all of Japan, assignors to Sanyo Electric Co., Ltd., Osaka, Japan
Filed Feb. 8, 1996, Ser. No. 50,100
Term of patent 14 years
LOC (6) Cl. 13 - *02*
U.S. Cl. D13—103

388,061
HOUSING FOR CABLE TELEVISION, DIRECT BROADCAST SATELLITE AND MULTI-CHANNEL MULTI-POINT DISTRIBUTION SYSTEMS
Avraham Tuvy, Oakhurst, and Michael P. DiLonardo, Toms River, both of N.J., assignors to ANTEC Corp., Rolling Meadows, Ill.
Filed Sep. 13, 1996, Ser. No. 59,740
Term of patent 14 years
LOC (6) Cl. 13 - *02*
U.S. Cl. D13—152

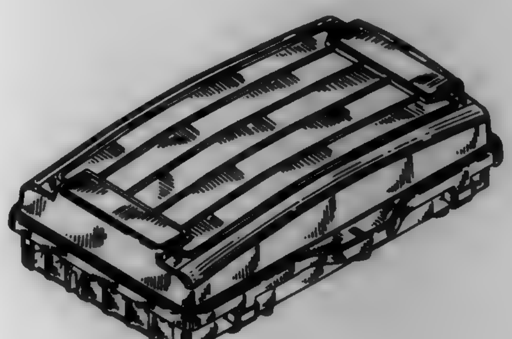

388,062
ELECTRONIC DATA PROCESSING EQUIPMENT CABINET
Frank Michael Desiano; Mark William Jackson, both of Poughkeepsie; Gerard Francis Muenkel, Highland, and Douglas Alexander Smalley, Clinton Corners, all of N.Y., assignors to International Business Machines Corporation, Armonk, N.Y.
Filed Oct. 31, 1996, Ser. No. 61,803
Term of patent 14 years
LOC (6) Cl. 14 - *02*
U.S. Cl. D14—102

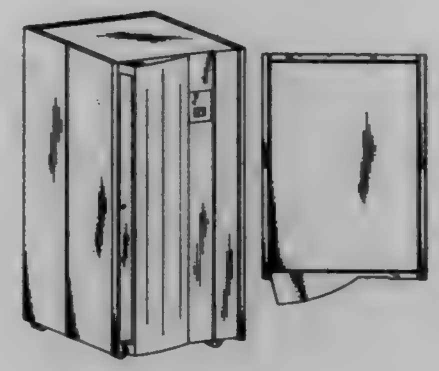

388,063
PORTABLE COMPUTER
Gi-Soo Kim, Incheon, Rep. of Korea, assignor to Daewoo Telecom Ltd., Incheon, Rep. of Korea
Filed Aug. 27, 1996, Ser. No. 58,869
Claims priority, application Rep. of Korea, Mar. 11, 1996, 96-4126
Term of patent 14 years
LOC (6) Cl. 14 - *02*
U.S. Cl. D14—106

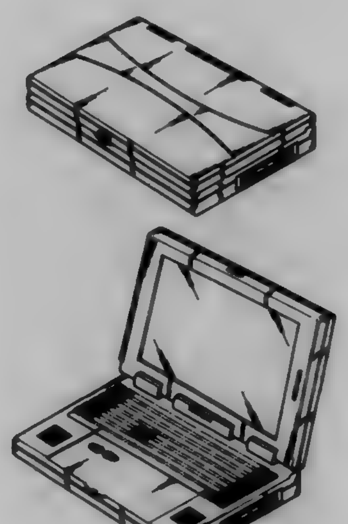

388,064
COMPUTER MOUSING PLATFORM
Charlene King, Castle Rock, Colo., assignor to Medias & Company, Castle Rock, Colo.
Filed May 30, 1996, Ser. No. 55,044
Term of patent 14 years
LOC (6) Cl. 14 - *02*
U.S. Cl. D14—114

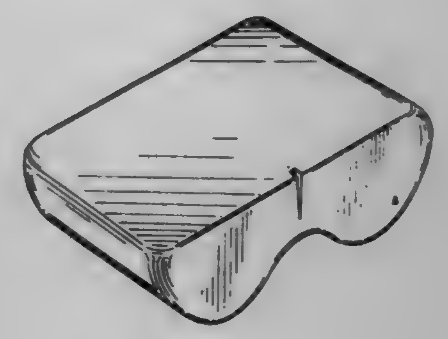

388,065
CURSOR CONTROL INPUT DEVICE
Masahiko Kawauchi; Tadamitsu Sato; J. Scott Petermann, all of San Jose, and Tark Abed, Palo Alto, all of Calif., assignors to Alps Electric (USA), Inc., San Jose, Calif.
Filed Aug. 2, 1996, Ser. No. 57,910
Term of patent 14 years
LOC (6) Cl. 14 - *02*
U.S. Cl. D14—114

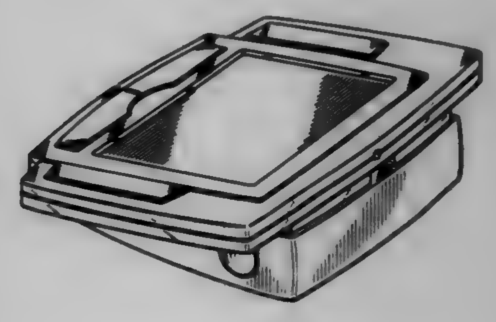

388,066

IC MODULE

Tomiaki Ishihara, Yokohama, Japan, assignor to Kabushiki Kaisha Toshiba, Kawasaki, Japan

Filed Nov. 27, 1996, Ser. No. 62,837

Claims priority, application Japan, May 29, 1996, 8-15401

Term of patent 14 years

LOC (6) Cl. 14 - *02*

U.S. Cl. D14—114

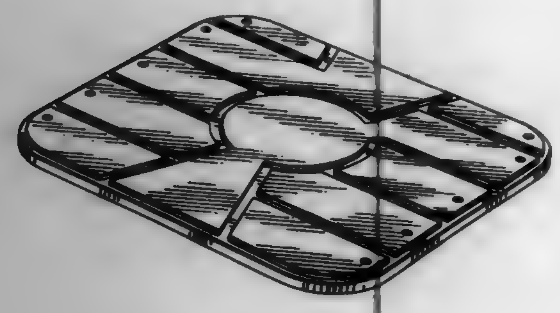

388,067

VIDEO FRAME GRABBER

Tony Chen; Thomas Chang, and Jesse Wu, all of Hsinchu, Taiwan, assignors to UMAX Data Systems, Inc., Taipei, Taiwan

Filed Dec. 27, 1996, Ser. No. 64,326

Term of patent 14 years

LOC (6) Cl. 14 - *02*

U.S. Cl. D14—114

388,068

PORTION OF A SCREEN OF A PROGRAMMED COMPUTER SYSTEM OR PROGRAMMED FACSIMILE MACHINE

Toshio Yamamoto, Kanagawa; Kyoko Sekine, Urawa, and Nozomi Sawada, Atsugi, all of Japan, assignors to Ricoh Company, Ltd., Tokyo, Japan

Continuation-in-part of Ser. No. 434,109, Nov. 13, 1989, abandoned. This application May 10, 1993, Ser. No. 8,000

Term of patent 14 years

LOC (6) Cl. 14 - *99*

U.S. Cl. D14—114.3

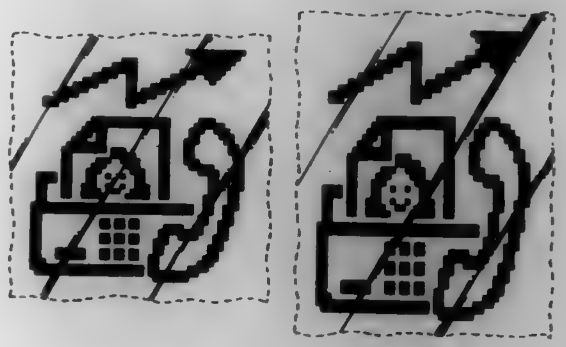

388,069

PORTION OF A SCREEN OF A PROGRAMMED COMPUTER SYSTEM

Toshio Yamamoto, Yokohamashi; Kyoko Sekine, Urawa, and Nozomi Sawada, Atsugi, all of Japan, assignors to Ricoh Company, Ltd., Tokyo, Japan

Continuation-in-part of Ser. No. 434,117, Nov. 13, 1989, abandoned. This application May 10, 1993, Ser. No. 8,037

Term of patent 14 years

LOC (6) Cl. 14 - *99*

U.S. Cl. D14—114.3

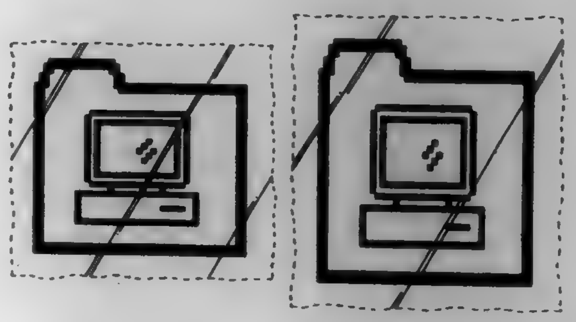

388,070

PORTION OF A SCREEN OF A PROGRAMMED COMPUTER SYSTEM

Toshio Yamamoto, Yokohamashi; Kyoko Sekine, Urawa, and Nozomi Sawada, Atsugi, all of Japan, assignors to Ricoh Company, Ltd., Tokyo, Japan

Continuation-in-part of Ser. No. 434,111, Nov. 13, 1989, abandoned. This application May 10, 1993, Ser. No. 8,040

Term of patent 14 years

LOC (6) Cl. 14 - *99*

U.S. Cl. D14—114.3

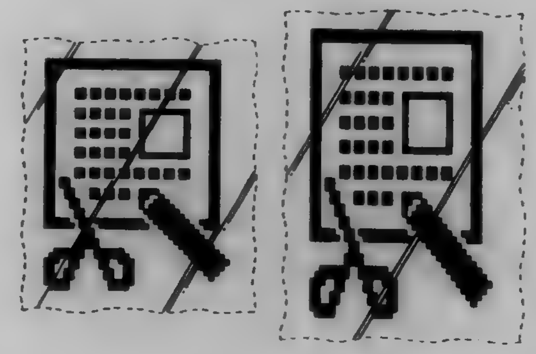

388,071

PORTION OF A SCREEN OF A PROGRAMMED COMPUTER SYSTEM

Toshio Yamamoto, Yokohamashi; Kyoko Sekine, Urawa, and Nozomi Sawada, Atsugi, all of Japan, assignors to Ricoh Company, Ltd., Tokyo, Japan

Continuation-in-part of Ser. No. 434,114, Nov. 13, 1989, abandoned. This application May 10, 1993, Ser. No. 8,081

Term of patent 14 years

LOC (6) Cl. 14 - *99*

U.S. Cl. D14—114.3

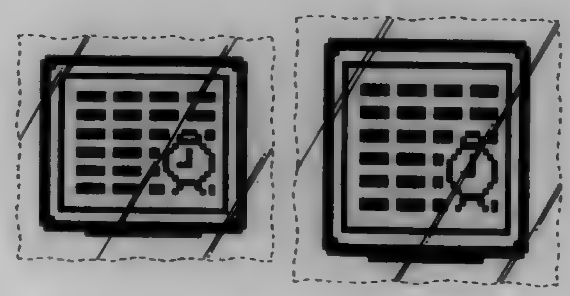

388,072

PORTION OF A SCREEN OF A PROGRAMMED COMPUTER SYSTEM OR PROGRAMMED FACSIMILE MACHINE

Nozomi Sawada, Atsugi, Japan, assignor to Ricoh Company, Ltd., Tokyo, Japan

Continuation-in-part of Ser. No. 434,119, Nov. 13, 1989, abandoned. This application May 10, 1993, Ser. No. 8,083

Term of patent 14 years

LOC (6) Cl. 14 - *99*

U.S. Cl. D14—114.3

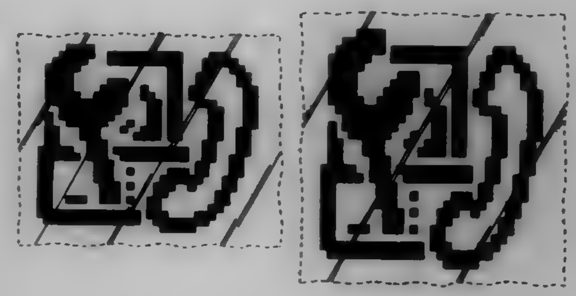

388,073

PORTION OF A SCREEN OF A PROGRAMMED COMPUTER SYSTEM

Toshio Yamamoto, Yokohamashi; Kyoko Sekine, Urawa, and Nozomi Sawada, Atsugi, all of Japan, assignors to Ricoh Company, Ltd., Tokyo, Japan

Continuation-in-part of Ser. No. 434,110, Nov. 13, 1989, abandoned. This application May 10, 1993, Ser. No. 8,084

Term of patent 14 years

LOC (6) Cl. 14 - *99*

U.S. Cl. D14—114

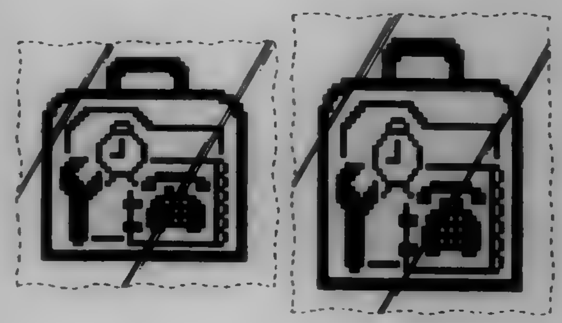

388,074
FACADE PANEL ARRANGEMENT FOR A DISK DRIVE CHASSIS
David Laituri, Palo Alto, and Gerome A. Haney, San Jose, both of Calif., assignors to StreamLogic Corporation, Menlo Park, Calif.
Filed Dec. 6, 1996, Ser. No. 63,418
Term of patent 14 years
LOC (6) Cl. 14 - *02*
U.S. Cl. D14—115

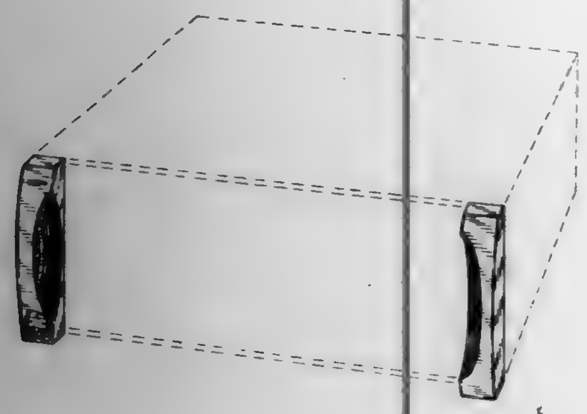

388,075
BAR CODE SCANNER
William Bayer, Rochester; Albert J. Ferland, Penfield; Paul Klock, Rochester; Joshua Maruska, West Henrietta, and James B. Thornton, Webster, all of N.Y., assignors to PSC, Inc., Webster, N.Y.
Filed Oct. 23, 1995, Ser. No. 45,541
Term of patent 14 years
LOC (6) Cl. 14 - *02*
U.S. Cl. D14—116

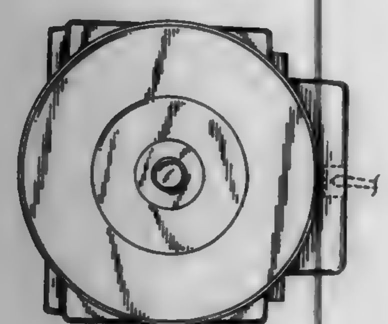

388,076
OPTICAL SCANNER
Philip W. Swift, Port Jefferson, N.Y., and Alan Ball, Arlington, Mass., assignors to Symbol Technologies, Inc., Holtsville, N.Y.
Filed Dec. 17, 1996, Ser. No. 63,829
Term of patent 14 years
LOC (6) Cl. 14 - *02*
U.S. Cl. D14—116

388,077
SCREEN FOR A TELEVISION SET
Philippe Starck, Issy-les-Moulineaux, France, assignor to Thomson Multimedia (Societe Anonyme), Courbevoie, France
Filed Oct. 18, 1996, Ser. No. 61,221
Claims priority, application France, Apr. 19, 1996, 96 2408
Term of patent 14 years
LOC (6) Cl. 14 - *03*
U.S. Cl. D14—126

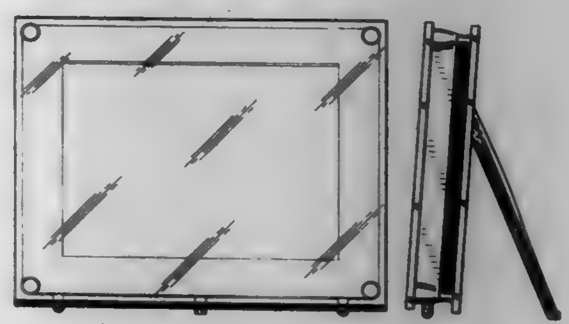

388,078
PORTABLE TELEPHONE HOUSING
Nicholas Mischenko, Mt. Prospect; Daryl R. Harris, Evanston, and Daniel L. Williams, Vernon Hills, all of Ill., assignors to Motorola, Inc., Schaumburg, Ill.
Continuation-in-part of Ser. No. 46,799, Oct. 17, 1995. This application May 2, 1996, Ser. No. 55,807
Term of patent 14 years
LOC (6) Cl. 14 - *03*
U.S. Cl. D14—138

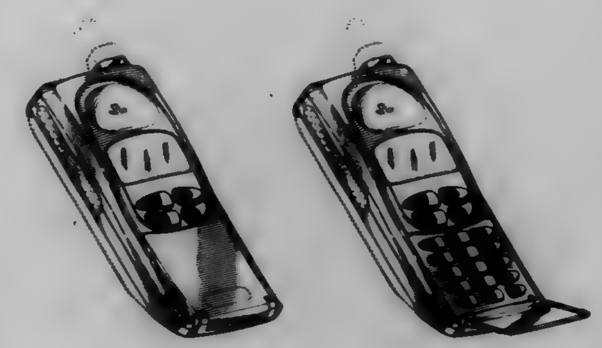

388,079
TELEPHONE HOUSING
Bradley K. Lohrding, Gurnee; Daniel L. Williams, Vernon Hills, and Timothy A. Kubicki, Arlington Heights, all of Ill., assignors to Motorola, Inc., Schaumburg, Ill.
Filed Oct. 2, 1996, Ser. No. 60,610
Term of patent 14 years
LOC (6) Cl. 14 - *03*
U.S. Cl. D14—138

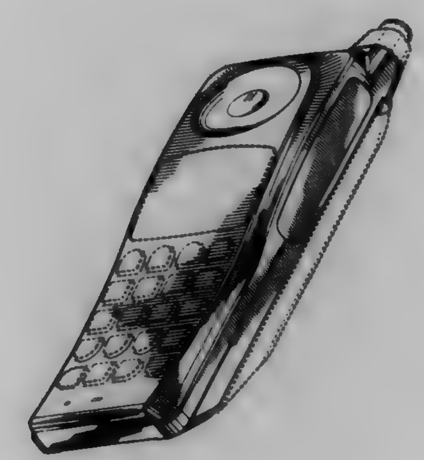

388,080
PORTABLE TELEPHONE HOUSING
Daryl R. Harris, Evanston; Daniel L. Williams, Vernon Hills, and Nicholas Mischenko, Mt. Prospect, all of Ill., assignors to Motorola, Inc., Schaumburg, Ill.
Filed Oct. 18, 1995, Ser. No. 46,799
Term of patent 14 years
LOC (6) Cl. 14 - *03*
U.S. Cl. D14—138

388,081
PORTABLE RADIOTELEPHONE
Bradley K. Lohrding, Gurnee; Daniel L. Williams, Vernon Hills, both of Ill.; Christopher J. Nona, Phoenix, Ariz., and Daryl R. Harris, Evanston, Ill., assignors to Motorola, Inc., Schaumburg, Ill.
Filed Feb. 28, 1997, Ser. No. 67,025
Term of patent 14 years
LOC (6) Cl. 14 - *03*
U.S. Cl. D14—138

388,082
FACEPLATE FOR A CORDLESS PORTABLE TELEPHONE

Albert L. Nagele, Wilmette; Leonid Soren, Lincolnwood; James D. Palmer, Deerfield, and Jose T. Lo, Wheeling, all of Ill., assignors to Motorola, Inc., Schaumburg, Ill.

Division of Ser. No. 57,705, Jul. 30, 1996, which is a continuation-in-part of Ser. No. 44,939, Oct. 3, 1995, abandoned. This application Apr. 21, 1997, Ser. No. 69,002

Term of patent 14 years

LOC (6) Cl. 14 - *03*

U.S. Cl. D14—138

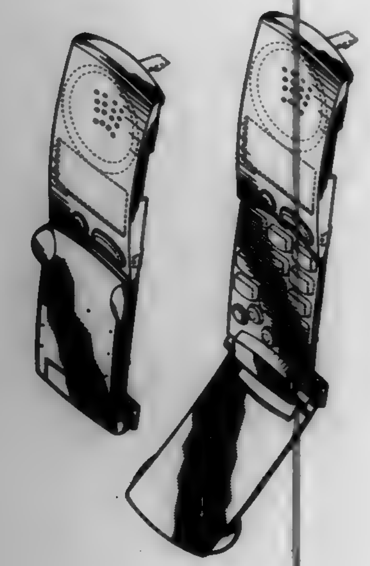

388,083
COIN PHONE

Johnny Chung, 6F-3, No. 296, Sec. 2, Chung Shan Road, Chung Ho City, Taipei Hsien, Taiwan

Filed Dec. 31, 1996, Ser. No. 64,426

Term of patent 14 years

LOC (6) Cl. 14 - *03*

U.S. Cl. D14—146

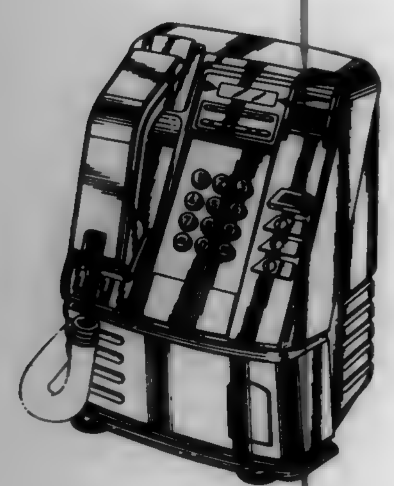

388,084
TELEPHONE BASE SET HOUSING

Joseph Chan Ka Hung, New Territories, Hong Kong, assignor to Vtech Communications Ltd., Hong Kong, Hong Kong

Filed Jan. 4, 1996, Ser. No. 48,579

Term of patent 14 years

LOC (6) Cl. 14 - *03*

U.S. Cl. D14—149

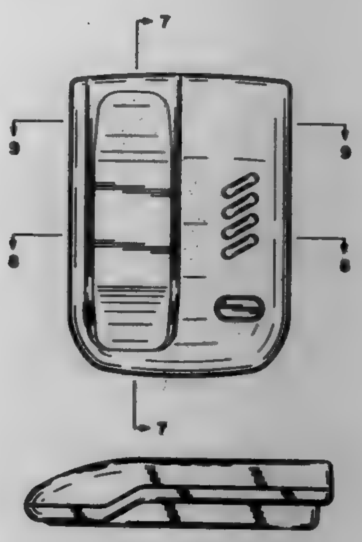

388,085
TELEPHONE BASE

Perry W. Diamantis, East Brunswick; Donovan M. Folkes, Somerset, both of N.J.; James Edward McCay, Fairfield, Conn., and Sebastian J. Messina, Jr., Fredon, N.J., assignors to Lucent Technologies Inc., Murray Hill, N.J.

Filed May 31, 1996, Ser. No. 55,210

Term of patent 14 years

LOC (6) Cl. 14 - *03*

U.S. Cl. D14—149

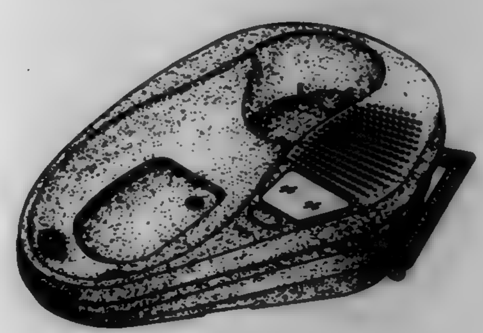

388,086
TELEPHONE

Richard Constantine, Niantic, and Anthony Solomita, Norwalk, both of Conn., assignors to Conair Corporation, Stamford, Conn.

Filed Sep. 6, 1996, Ser. No. 60,286

Term of patent 14 years

LOC (6) Cl. 14 - *03*

U.S. Cl. D14—150

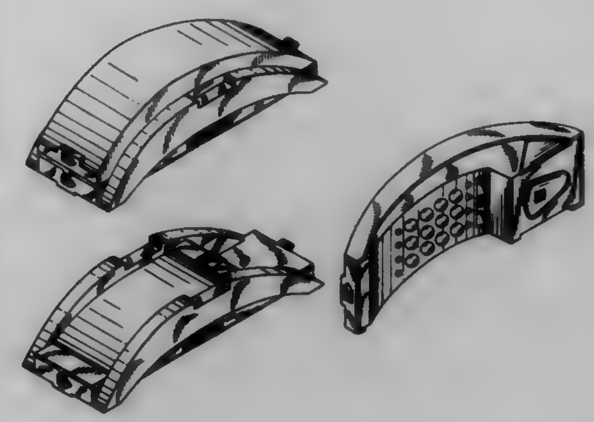

388,087
TELEPHONE BASE

Perry W. Diamantis, East Brunswick; Donovan M. Folkes, Somerset, both of N.J.; James Edward McCay, Fairfield, Conn., and Sebastian J. Messina, Jr., Fredon, N.J., assignors to Lucent Technologies Inc., Murray Hill, N.J.

Filed May 31, 1996, Ser. No. 55,211

Term of patent 14 years

LOC (6) Cl. 14 - *03*

U.S. Cl. D14—151

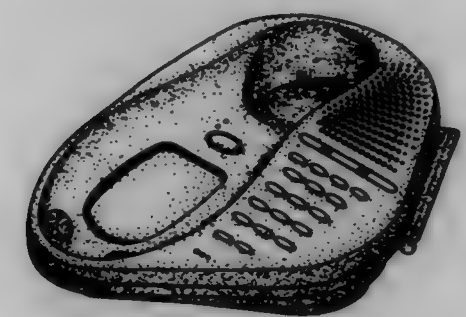

388,088
HOLLOW COVER FOR A LIGHTWAVE SOURCE

C. Ward Bond, Baton Rouge, La., and William Crandall, San Francisco, Calif., assignors to Talking Signs, Inc., Baton Rouge, La.

Filed Oct. 5, 1995, Ser. No. 44,997

Term of patent 14 years

LOC (6) Cl. 14 - *03*

U.S. Cl. D14—155

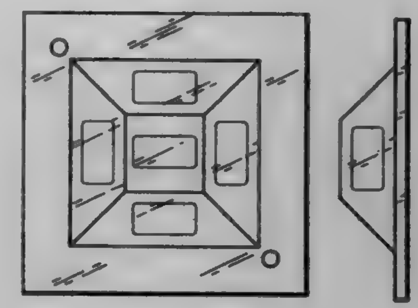

388,089
PAGER

Yuko Komamiya; Mikiro Ichijima, and Toshiro Iizuka, all of Kanagawa, Japan, assignors to Matsushita Electric Industrial Co., Ltd., Osaka, Japan

Filed May 1, 1995, Ser. No. 38,224

Claims priority, application Japan, Nov. 1, 1994, 6-33435

Term of patent 14 years

LOC (6) Cl. 14 - *03*

U.S. Cl. D14—191

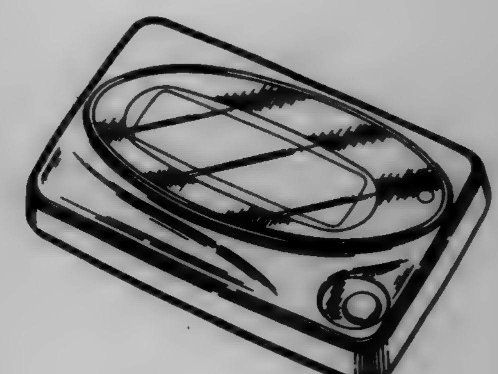

388,090
SELECTIVE CALL RECEIVER
Bee Lay Khoo, Johor Bahru, Malaysia, assignor to Motorola, Inc., Schaumburg, Ill.
Filed Apr. 17, 1996, Ser. No. 53,225
Term of patent 14 years
LOC (6) Cl. 14 - *01*
U.S. Cl. D14—191

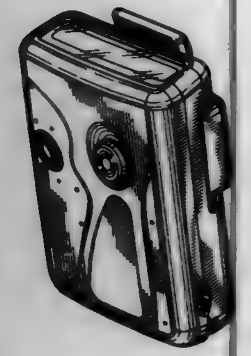

388,091
COMBINED DISPLAY AND BUTTON FOR PORTABLE COMMUNICATION RECEIVER
Craig Allen Lee, and Donald Charles Guthan, Jr., both of Boynton Beach, Fla., assignors to Motorola, Inc., Schaumburg, Ill.
Filed Sep. 26, 1996, Ser. No. 60,332
Term of patent 14 years
LOC (6) Cl. 14 - *03*
U.S. Cl. D14—191

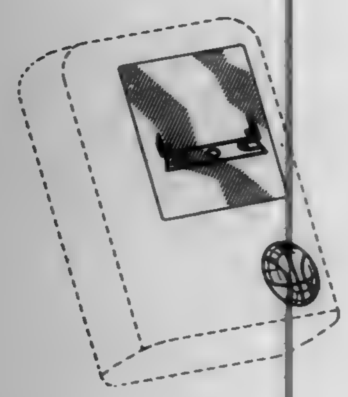

388,092
CONTRACTOR'S RADIO
Bruce E. Coppola, 49 Rock Cut Rd., Newburgh, N.Y. 12550
Filed Aug. 23, 1995, Ser. No. 43,002
Term of patent 14 years
LOC (6) Cl. 14 - *03*
U.S. Cl. D14—196

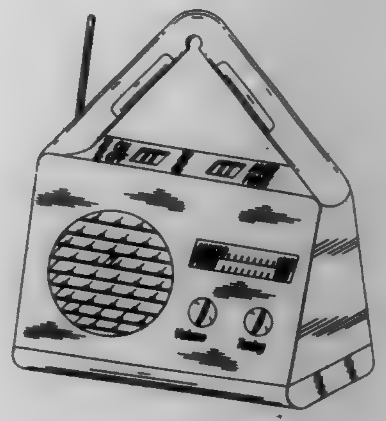

388,093
PAIR OF EAR PIECES
Andrew James Frengley, London, England, assignor to Garwood Communications Limited, London, England
Filed Aug. 15, 1995, Ser. No. 42,629
Term of patent 14 years
LOC (6) Cl. 14 - *01*
U.S. Cl. D14—223

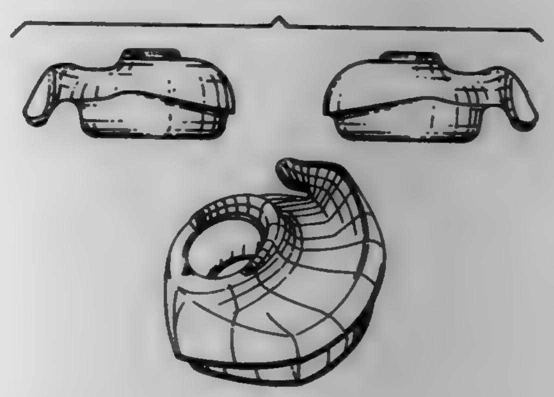

388,094
COMBINED SPEAKER AND MICROPHONE
Masaru Tokiyama, Coral Springs; David Isaac Blatt, Margate, both of Fla.; Jeff Robert Beasley, Buford, Ga., and Michael Scott Henning, Round Lake Beach, Ill., assignors to Motorola, Inc., Schaumburg, Ill.
Filed Feb. 5, 1996, Ser. No. 49,925
Term of patent 14 years
LOC (6) Cl. 14 - *01*
U.S. Cl. D14—226

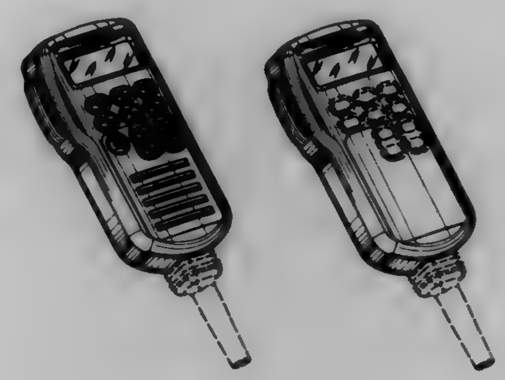

388,095
MEDIA UNIT
Makoto Niijima, and Yoshiaki Kumagai, both of Tokyo, Japan, assignors to Sony Corporation, Tokyo, Japan
Filed May 5, 1995, Ser. No. 38,403
Term of patent 14 years
LOC (6) Cl. 14 - *03*
U.S. Cl. D14—230

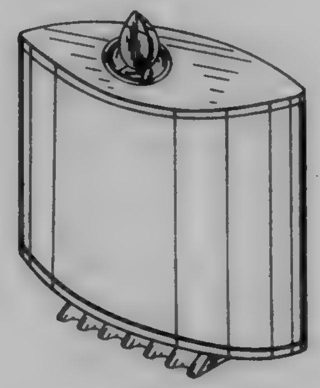

388,096
ANTENNA FOR AN AUTOMOBILE
Katsuhiko Yamakawa, Tokyo, and Shigeru Uchino, Yokohama, both of Japan, assignors to Harada Industry Co., Ltd., Tokyo, Japan
Filed Aug. 1, 1996, Ser. No. 57,823
Claims priority, application Japan, Feb. 5, 1996, 8-2709; Feb. 5, 1996, 8-2715
Term of patent 14 years
LOC (6) Cl. 14 - *03*
U.S. Cl. D14—230

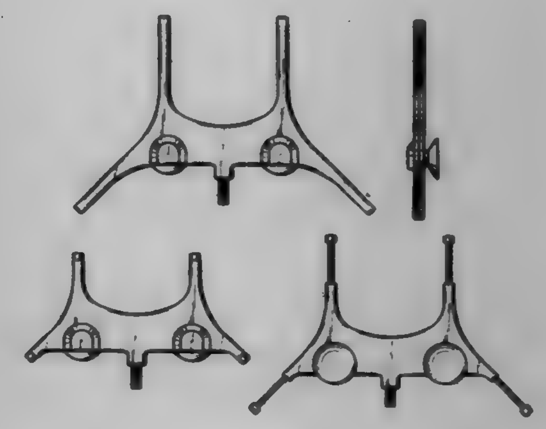

388,097
ANTENNA FOR AN AUTOMOBILE
Katsuhiko Yamakawa, Tokyo, and Shigeru Uchino, Yokohama, both of Japan, assignors to Harada Industry Co., Ltd., Tokyo, Japan
Filed Aug. 1, 1996, Ser. No. 57,824
Claims priority, application Japan, Feb. 5, 1996, 8-2712
Term of patent 14 years
LOC (6) Cl. 14 - *03*
U.S. Cl. D14—230

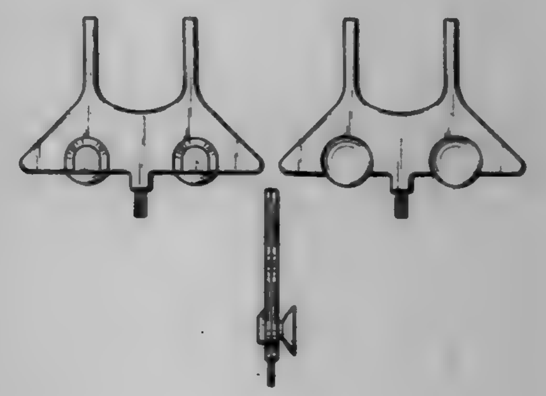

388,098
ANTENNA FOR AN AUTOMOBILE
Katsuhiko Yamakawa, Tokyo, and Shigeru Uchino, Yokohama, both of Japan, assignors to Harada Industry Co., Ltd., Tokyo, Japan
Filed Aug. 1, 1996, Ser. No. 57,825
Claims priority, application Japan, Feb. 5, 1996, 8-2710; Feb. 5, 1996, 8-2713
Term of patent 14 years
LOC (6) Cl. 14 - *03*
U.S. Cl. D14—230

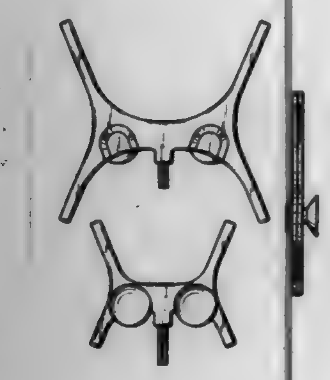

388,099
ANTENNA FOR AN AUTOMOBILE
Katsuhiko Yamakawa, Tokyo, and Shigeru Uchino, Yokohama, both of Japan, assignors to Harada Industry Co., Ltd., Tokyo, Japan
Filed Aug. 1, 1996, Ser. No. 57,826
Claims priority, application Japan, Feb. 5, 1996, 8-2711; Feb. 5, 1996, 8-2714
Term of patent 14 years
LOC (6) Cl. 14 - *03*
U.S. Cl. D14—230

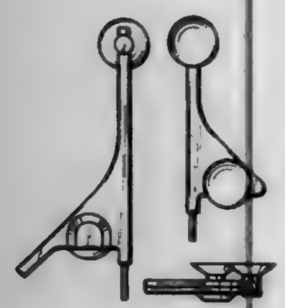

388,100
RADIO ANTENNA
Andrew Jesman, Highdown, Longdown Road, Guildford, Surrey, United Kingdom, GU4 8PP, and Christopher Jesman, 46 Cole Park Road, Twickenham, Middlesex, United Kingdom, TW1 2HS
Filed Aug. 11, 1995, Ser. No. 42,496
Claims priority, application United Kingdom, Feb. 13, 1995, 2045205
Term of patent 14 years
LOC (6) Cl. 14 - *99*
U.S. Cl. D14—234

388,101
ANTENNA ELEMENT
Jiro Harada, Tokyo, Japan, assignor to Harada Industry Co., Ltd., Tokyo, Japan
Filed Sep. 19, 1995, Ser. No. 44,168
Claims priority, application Japan, Mar. 20, 1995, 7249/1995
Term of patent 14 years
LOC (6) Cl. 14 - *94*
U.S. Cl. D14—234

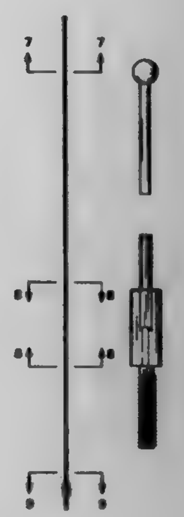

388,102
FUNCTION EXTENDED UNIT FOR A TELEPHONE
Takahisa Yoneyama, Yokohama, Japan, assignor to Kabushiki Kaisha Toshiba, Kawasaki, Japan
Filed Oct. 15, 1996, Ser. No. 61,007
Claims priority, application Japan, Apr. 16, 1996, 8-10919
Term of patent 14 years
LOC (6) Cl. 14 - *03*
U.S. Cl. D14—241

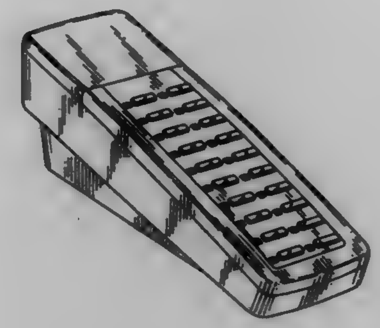

388,103
ELECTRICAL DISCHARGE MACHINE
Masato Gotou; Takanori Miyake, and Makoto Tanaka, all of Tokyo, Japan, assignors to Mitsubishi Denki Kabushiki Kaisha, Tokyo, Japan
Filed Jul. 22, 1996, Ser. No. 57,277
Claims priority, application Japan, Jan. 22, 1996, 8-1213
Term of patent 14 years
LOC (6) Cl. 15 - *09*
U.S. Cl. D15—127

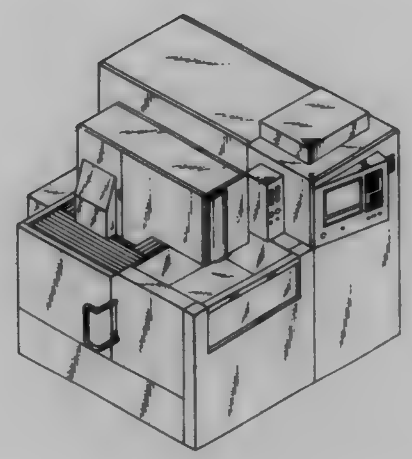

388,104
CAMERA LENS
Arata Ono, Urawa, and Jun Akabane, Yokohama, both of Japan, assignors to Nikon Corporation, Tokyo, Japan
Filed Sep. 11, 1996, Ser. No. 59,419
Claims priority, application Japan, Jun. 13, 1996, 8-17573
Term of patent 14 years
LOC (6) Cl. 16 - *06*
U.S. Cl. D16—134

388,105
ELECTRONIC STILL CAMERA
Kazuo Yamamoto, Tama, Japan, assignor to Olympus Optical Co., Ltd., Tokyo, Japan
Filed Feb. 20, 1996, Ser. No. 51,336
Term of patent 14 years
LOC (6) Cl. 16 - *01*
U.S. Cl. D16—202

388,106
VIDEO CAMERA WITH VIDEO TAPE RECORDER
Chifuyu Tanaka, Tokyo, Japan, assignor to Canon Kabushiki Kaisha, Tokyo, Japan
Filed Dec. 11, 1996, Ser. No. 63,609
Claims priority, application Japan, Jun. 13, 1996, 8-17577
Term of patent 14 years
LOC (6) Cl. 16 - *01*
U.S. Cl. D16—202

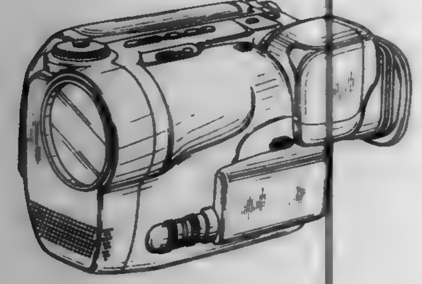

388,107
COMBINED CAMERA AND MOUNT SYSTEM FOR A VEHICLE
Terry D. Huckins, 4326 Ridgecrest, Amarillo, Tex. 79109
Filed Aug. 6, 1996, Ser. No. 58,028
Term of patent 14 years
LOC (6) Cl. 16 - *01*
U.S. Cl. D16—208

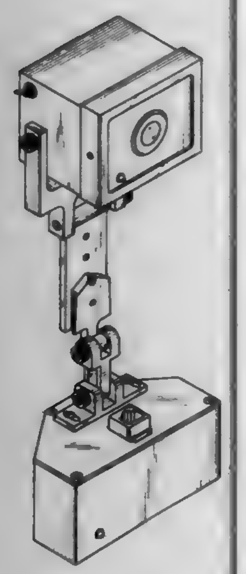

388,108
CAMERA WITH ALARM
Charles W. Kloss, 12960 SW. Hart Rd., Beaverton, Oreg. 97008
Filed Nov. 7, 1996, Ser. No. 63,351
Term of patent 14 years
LOC (6) Cl. 16 - *01*
U.S. Cl. D16—208

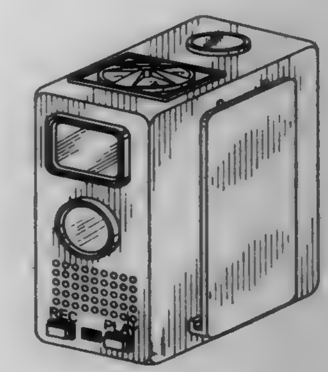

388,109
SINGLE LENS REFLEX CAMERA
Hiroyuki Kimura, Tanashi, and Toshio Matsumoto, Machida, both of Japan, assignors to Canon Kabushiki Kaisha, Tokyo, Japan
Filed Jul. 26, 1996, Ser. No. 57,529
Claims priority, application Japan, Jan. 30, 1996, 8-2110
Term of patent 14 years
LOC (6) Cl. 16 - *01*
U.S. Cl. D16—217

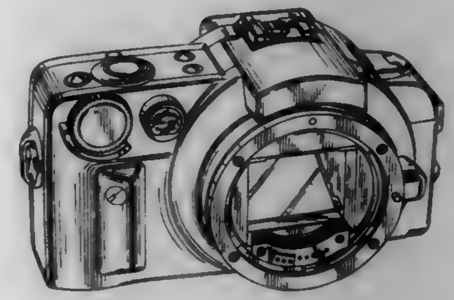

388,110
SINGLE LENS REFLEX CAMERA
Kazuhiko Watarai, and Satoru Tanio, both of Tokyo, Japan, assignors to Olympus Optical Co., Ltd., Tokyo, Japan
Filed Nov. 12, 1996, Ser. No. 62,241
Term of patent 14 years
LOC (6) Cl. 16 - *01*
U.S. Cl. D16—217

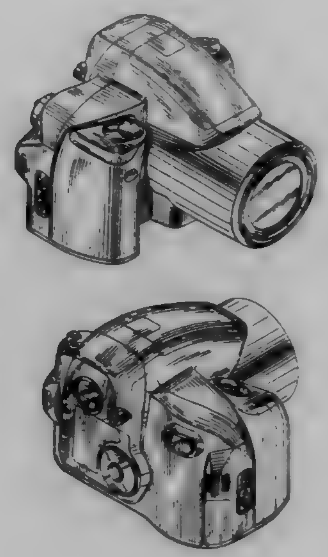

388,111
VIDEO PROJECTOR
Koichi Iida, Tochigi-ken, Japan, assignor to Sharp Kabushiki Kaisha, Osaka, Japan
Filed Aug. 19, 1996, Ser. No. 58,576
Claims priority, application Japan, Feb. 19, 1996, 8-4291
Term of patent 14 years
LOC (6) Cl. 16 - *02*
U.S. Cl. D16—231

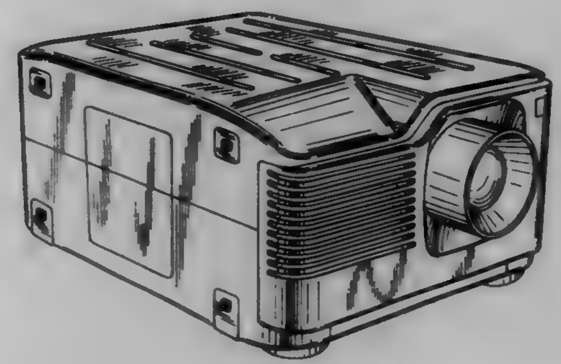

388,112
EYEGLASSES
Vasil Giakonoski, 241 Baywood Dr., Pass Christian, Miss. 39571-2111
Filed Nov. 7, 1996, Ser. No. 62,095
Term of patent 14 years
LOC (6) Cl. 16 - *06*
U.S. Cl. D16—306

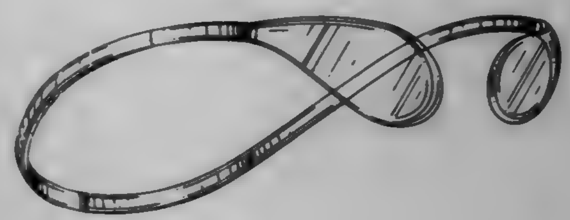

388,113
COMBINED EYEGLASSES AND MOUNTED HEADLIGHT
Richard E. Feinbloom, New York, N.Y., assignor to Designs for Vision, Inc., Ronkonkoma, N.Y.
Filed Oct. 11, 1996, Ser. No. 60,941
Term of patent 14 years
LOC (6) Cl. 16 - *06*
U.S. Cl. D16—309

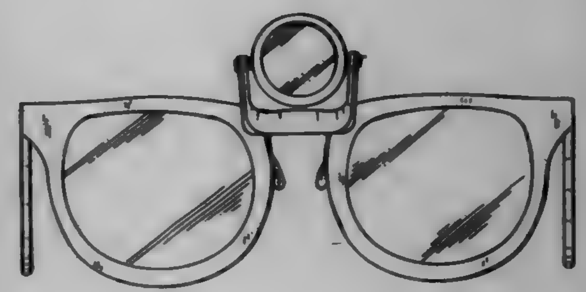

388,114
HEAD BAND WITH OPTICAL LENSES
Beatriz Ferro, 4831 SW. 82 St., Miami, Fla. 33143
Filed Dec. 4, 1996, Ser. No. 63,288
Term of patent 14 years
LOC (6) Cl. 16 - *06*
U.S. Cl. D16—309

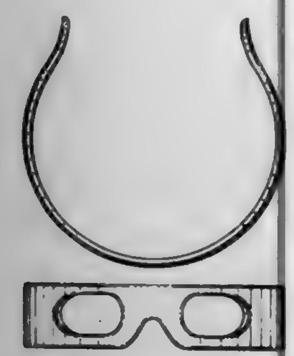

388,115
EAR PROTECTOR FOR EYEGLASSES
David M. Celaschi, and Suzanne M. Celaschi, both of 60103 Agate Rd., Bend, Oreg. 97702
Filed Nov. 9, 1995, Ser. No. 49,398
Term of patent 14 years
LOC (6) Cl. 16 - *06*
U.S. Cl. D16—338

388,116
VISOR FOR SUNGLASSES
Wen-te Wang, No. 246-1, Kang-Kou, Kang-Kou Tsun, An-Ting Hsiang, Tainan, Hsien, Taiwan
Filed Nov. 13, 1996, Ser. No. 62,332
Term of patent 14 years
LOC (6) Cl. 16 - *06*
U.S. Cl. D16—340

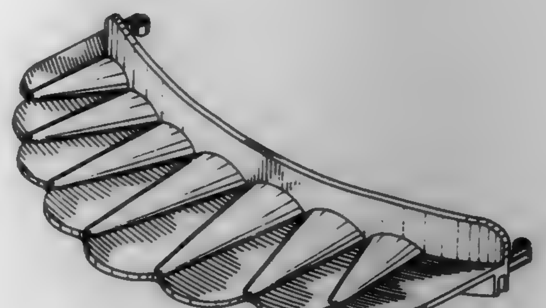

388,117
GUITAR PEGHEAD
Edward Van Halen, 6255 Sunset Blvd, Suite 2000, Los Angeles, Calif. 90028; Hartley D. Peavey, and Jim DeCola, both of Meridian, Miss., assignors to Edward Van Halen, Los Angeles, Calif.
Filed Jul. 12, 1995, Ser. No. 41,346
Term of patent 14 years
LOC (6) Cl. 17 - *03*
U.S. Cl. D17—20

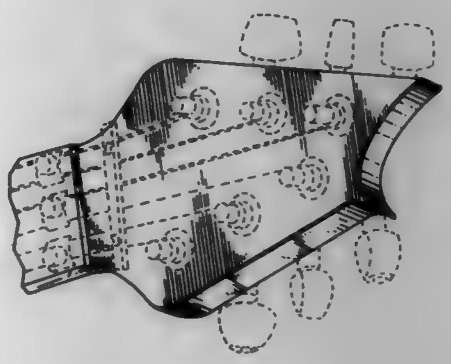

388,118
PAPER BINDER
Hisao Sato, Fujimidai Mansion 2002, 29-10, Nukui 1-chome, Nerima-ku, Tokyo, Japan
Filed Mar. 26, 1996, Ser. No. 52,189
Term of patent 14 years
LOC (6) Cl. 19 - *04*
U.S. Cl. D19—27

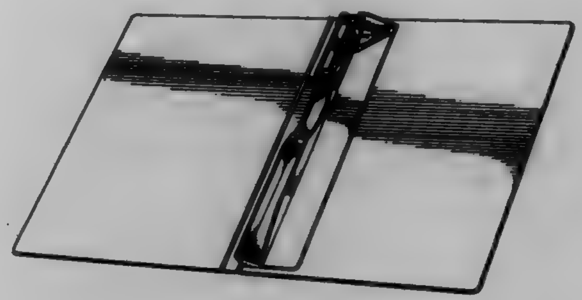

388,119
PEN FOR CORRECTION LIQUID OR REGULAR INK
Michiaki Kuramoto, Tokyo, Japan, assignor to Kabushiki Kaisha Pilot, Tokyo, Japan
Filed Aug. 30, 1996, Ser. No. 59,000
Claims priority, application Japan, Mar. 6, 1996, 8-6042
Term of patent 14 years
LOC (6) Cl. 19 - *06*
U.S. Cl. D19—51

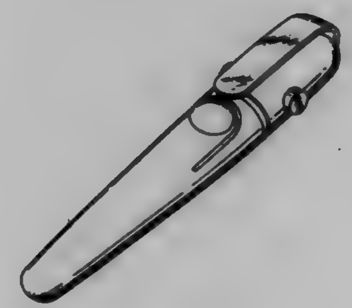

388,120
ELECTRONIC EDUCATIONAL GAME HOUSING
Chi K.W. Chow; Joan K.L. Chong, and Maisy M.S. Wai, all of New Territories, Hong Kong, assignors to Vtech Industries, LLC., Wheeling, Ill.
Filed Apr. 9, 1996, Ser. No. 52,812
Term of patent 14 years
LOC (6) Cl. 19 - *07*
U.S. Cl. D19—60

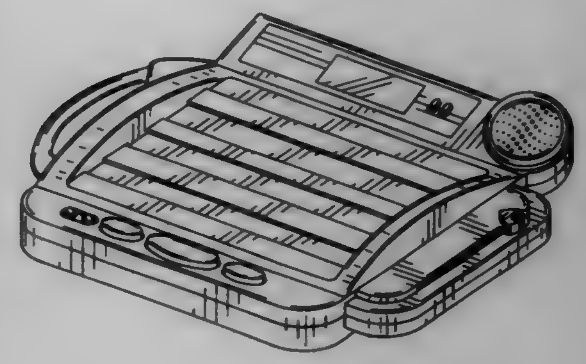

388,121
NOTES HOLDER
Victor J. Gomez, 5 Howe St., North Haven, Conn. 06473
Filed Apr. 5, 1996, Ser. No. 52,789
Term of patent 14 years
LOC (6) Cl. 19 - *02*
U.S. Cl. D19—90

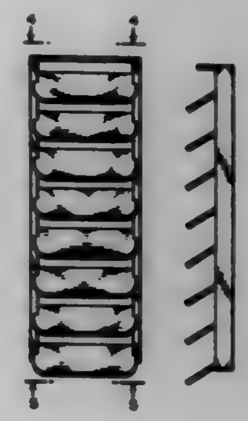

388,122
GUMBALL TRICKS MACHINE
Jamie M. Beene, 408 E. James St., Cleburne, Tex. 76031
Filed Feb. 13, 1997, Ser. No. 66,357
Term of patent 14 years
LOC (6) Cl. 20 - *01*
U.S. Cl. D20—7

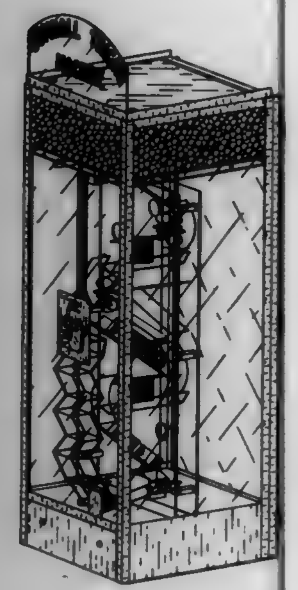

388,123
LIGHT-EMITTING DIODE INDICATOR
Katsuyuki Sukumoda; Tatsuya Okonogi, and Yukio Yoshikawa, all of Itabashi-ku, Japan, assignors to Copal Company Limited, Tokyo, Japan
Filed Oct. 30, 1995, Ser. No. 45,771
Claims priority, application Japan, Apr. 28, 1995, HEI 7-12383
Term of patent 14 years
LOC (6) Cl. 20 - *01*
U.S. Cl. D20—10

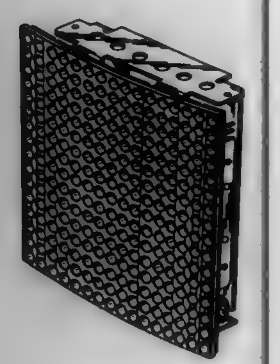

388,124
SIGN
Klaus Peter Rath, Vejle, Denmark, assignor to A/S Modulex, Billund, Denmark
Filed Sep. 19, 1995, Ser. No. 44,156
Claims priority, application Denmark, Mar. 31, 1995, MA 284 1995
Term of patent 14 years
LOC (6) Cl. 20 - *03*
U.S. Cl. D20—42

388,125
SIGN
Klaus Peter Rath, Vejle, Denmark, assignor to A/S Modulex, Billund, Denmark
Filed Sep. 19, 1995, Ser. No. 44,157
Claims priority, application Denmark, Mar. 31, 1995, MA 286 1995
Term of patent 14 years
LOC (6) Cl. 20 - *03*
U.S. Cl. D20—42

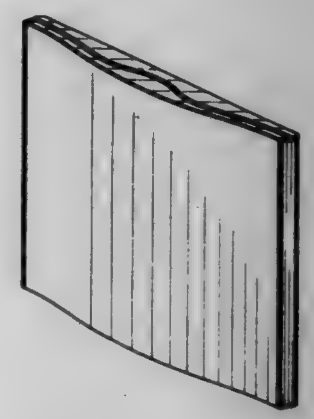

388,126
SIGN
Klaus Peter Rath, Vejle, Denmark, assignor to A/S Modulex, Billund, Denmark
Filed Sep. 19, 1995, Ser. No. 44,160
Claims priority, application Denmark, Mar. 31, 1995, MA 285 1995
Term of patent 14 years
LOC (6) Cl. 20 - *02*
U.S. Cl. D20—42

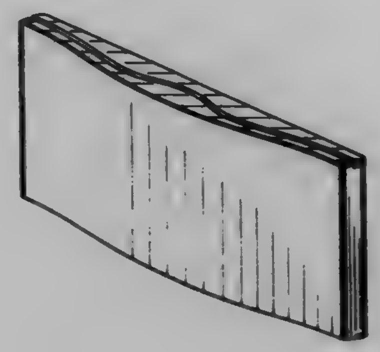

388,127
SKILL GAME
Frank J. Cavallone, Sr., 8332 Dorado Bay Ct., Las Vegas, Nev. 89128-7169
Filed Jun. 25, 1996, Ser. No. 56,199
Term of patent 14 years
LOC (6) Cl. 21 - *01*
U.S. Cl. D21—5

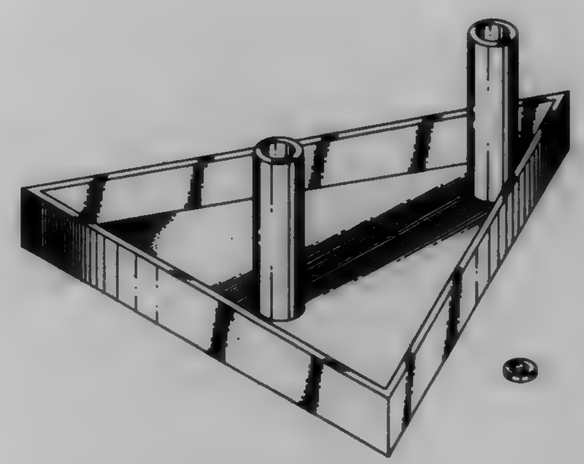

388,128
COMBINED MULTIPLE SHEET TARGET PRACTICE BOARD WITH STAND
Linda S. Young, 8321 Middle Rd, Ooltewah, Tenn. 37363
Filed Nov. 13, 1995, Ser. No. 46,326
Term of patent 14 years
LOC (6) Cl. 21 - *01*
U.S. Cl. D21—6

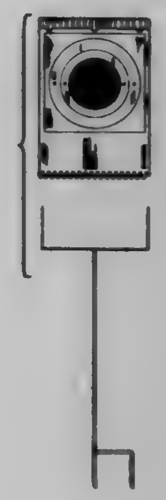

388,129
THREE DIMENSIONAL CHESS BOARD
Michael Carl Lampel, 18535 Devonshire St., Northridge, Calif. 91324
Filed Sep. 19, 1996, Ser. No. 59,990
Term of patent 14 years
LOC (6) Cl. 21 - *01*
U.S. Cl. D21—23

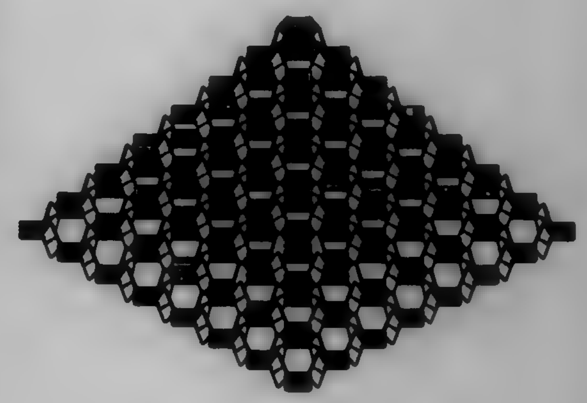

388,130
GAME BOARD SOLUTION
Marc Andrew Bond, Woodside, United Kingdom, assignor to British Gas PLC, London, England
Division of Ser. No. 39,324, May 24, 1995. This application Oct. 23, 1996, Ser. No. 61,417
Term of patent 14 years
LOC (6) Cl. 21 - *01*
U.S. Cl. D21—31

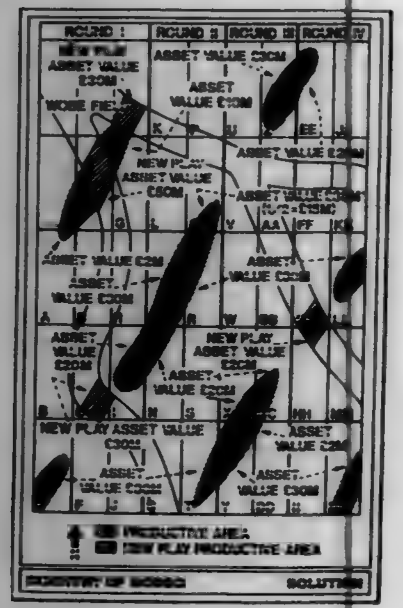

388,131
ALL TERRAIN RIDING VEHICLE
Ronald M. Snyder, 5607 Aven Rd., Marietta, Ga. 30068
Filed Dec. 16, 1996, Ser. No. 63,825
Term of patent 14 years
LOC (6) Cl. 12 - *14*
U.S. Cl. D21—71

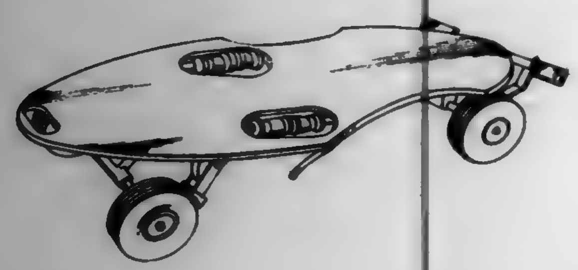

388,132
TOY VEHICLE
Matthew C. Maxwell, Kent, and Christopher G. Walter, Suffield, both of Ohio, assignors to The Little Tikes Company, Hudson, Ohio
Filed Jul. 12, 1996, Ser. No. 56,942
Term of patent 14 years
LOC (6) Cl. 21 - *01*
U.S. Cl. D21—78

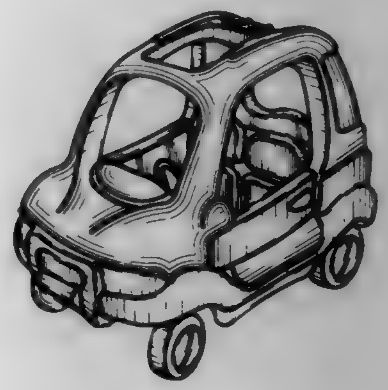

388,133
FLYING GYROSCOPE DESIGN
Mark Forti, and William B. Forti, both of 311 W. 6th St, Claremont, Calif. 91711
Filed Mar. 11, 1996, Ser. No. 51,419
Term of patent 14 years
LOC (6) Cl. 21 - *01*
U.S. Cl. D21—82

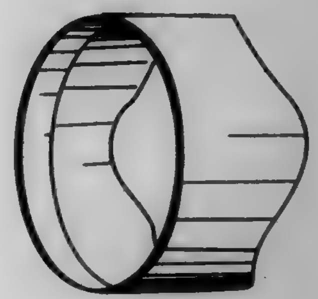

388,134
FLYING DISC
David Bruce Dunipace, Fontana, Calif., assignor to Innova Champion Discs, Inc., Rancho Cucamonga, Calif.
Continuation of Ser. No. 44,179, Sep. 19, 1995, abandoned, which is a division of Ser. No. 18,864, Feb. 16, 1994, Pat. No. Des. 369,191. This application Feb. 28, 1996, Ser. No. 50,858
Term of patent 14 years
LOC (6) Cl. 21 - *01*
U.S. Cl. D21—86

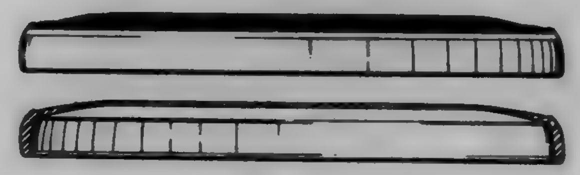

388,135
SPINNING TOP WITH DETACHABLE CARD
Michel Benchetrit, 49 boulevard Inkermann, 92200 Neuilly Sur Seine; Thierry Boukobza, 1 rue Claude Delvincourt, 95200 Sarcelles, and Jean-Michel Luciani, 1 avenue de la Source, 94130 Nogent Sur Marne, all of France
Filed Jul. 3, 1996, Ser. No. 56,630
Claims priority, application France, Jan. 3, 1996, 96 0011
Term of patent 14 years
LOC (6) Cl. 21 - *01*
U.S. Cl. D21—95

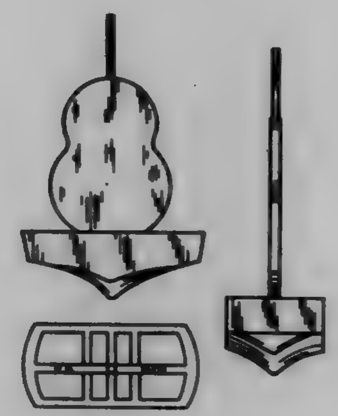

388,136
CONSTRUCTION TOY ELEMENT
Francis Lecocq, Hames-Boucres, and Jean-Pierre Moussaud, Les Attaques, both of France, assignors to Meccano, S.A., Calais, France
Filed Jun. 5, 1995, Ser. No. 39,730
Claims priority, application WIPO, Dec. 5, 1994, OMPI/DM/031469
Term of patent 14 years
LOC (6) Cl. 21 - *01*
U.S. Cl. D21—108

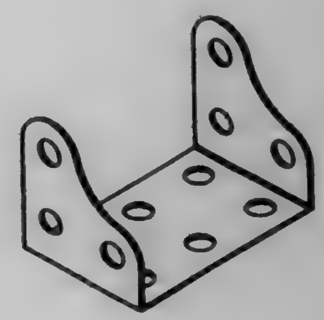

388,137
TOY BUILDING ELEMENT
Kent Rasmussen, Frederiksberg, and Niels Ørnvald, Helsinge, both of Denmark, assignors to Interlego AG, Baar, Switzerland
Filed Sep. 17, 1996, Ser. No. 59,842
The portion of the term of this patent subsequent to Oct. 14, 2011, has been disclaimed.
Term of patent 14 years
LOC (6) Cl. 21 - *01*
U.S. Cl. D21—108

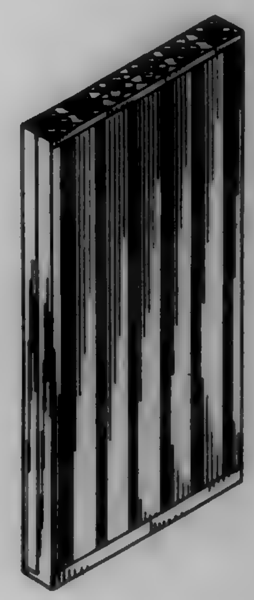

388,138
REVERSIBLE RACE TRACK SECTION
Réal Lanoix, Laval; Jean-Christophe Doyon, Verdun; Gilles Collin, Laval, and Daniel Bourgeois, Sainte-Rose, all of Canada, assignors to The Ritvik Group Group Inc., Quebec, Canada
Filed Feb. 2, 1996, Ser. No. 49,878
Claims priority, application Canada, Dec. 20, 1995, 1995-2887
Term of patent 14 years
LOC (6) Cl. 21 - *01*
U.S. Cl. D21—143

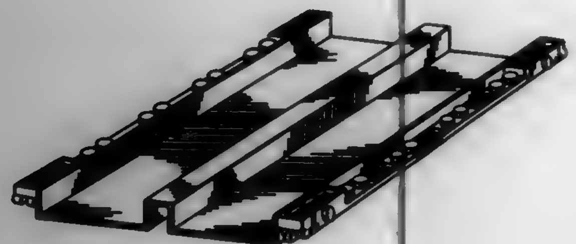

388,139
TOY ANIMAL
Robert Nielsen, Vejle, Denmark, assignor to Interlego AG, Baar, Switzerland
Filed Sep. 17, 1996, Ser. No. 59,831
Term of patent 14 years
LOC (6) Cl. 21 - *01*
U.S. Cl. D21—148

388,140
TOY ANIMAL
Jacob Nielsen, Copenhagen; Lone Bjørnskov-Bartholdy, Haslev, and Per Steen Nielsen, Hvidovre, all of Denmark, assignors to Interlego AG, Baar, Switzerland
Filed Sep. 17, 1996, Ser. No. 59,851
Term of patent 14 years
LOC (6) Cl. 21 - *01*
U.S. Cl. D21—148

388,141
TOY ANIMAL
Helle Kleist Nielsen, Frederiksberg, Denmark, assignor to Interlego AG, Baar, Switzerland
Filed Sep. 17, 1996, Ser. No. 59,816
Term of patent 14 years
LOC (6) Cl. 21 - *01*
U.S. Cl. D21—150

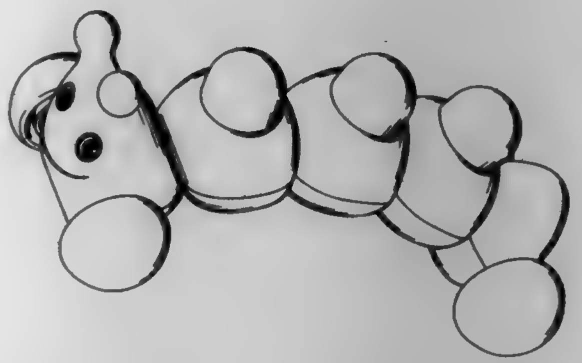

388,142
GOLF CLUB HEAD
John W. Miller, 3503 Barclay Dr., Louisville, Ky. 40299
Filed Nov. 29, 1995, Ser. No. 47,224
Term of patent 14 years
LOC (6) Cl. 21 - *02*
U.S. Cl. D21—214

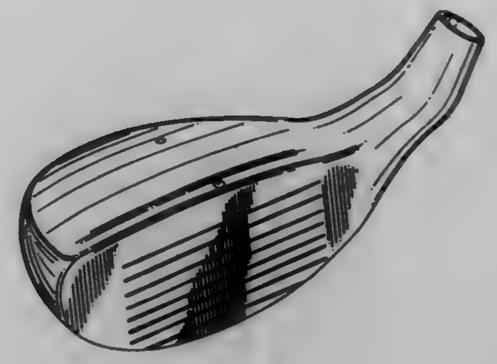

388,143
GOLF CLUB HEAD
Tseng Huan-Chiang, P.O. Box 82-144, Taipei, Taiwan
Filed Dec. 3, 1996, Ser. No. 62,915
Term of patent 14 years
LOC (6) Cl. 21 - *02*
U.S. Cl. D21—219

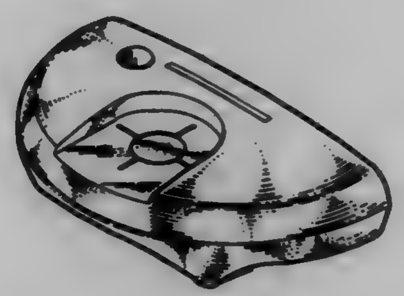

388,144
GOLF CLUB HEAD
Robert Lukasiewicz, 950465 Allison Ct., Hinsdale, Ill. 60521
Filed Nov. 27, 1996, Ser. No. 62,852
Term of patent 14 years
LOC (6) Cl. 21 - *02*
U.S. Cl. D21—220

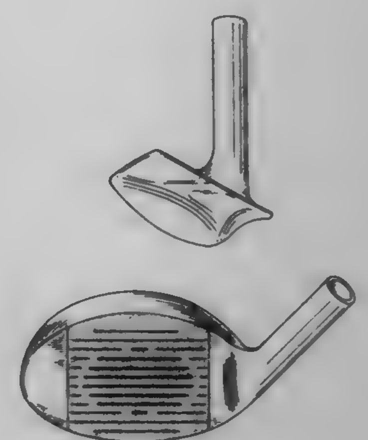

388,145
THREE WHEEL ROLLER SKATE
Charles Lee, P.O. Box 22887, Guam Main Facility, Barrigada, Guam, 96921
Filed Jun. 17, 1996, Ser. No. 55,927
Term of patent 14 years
LOC (6) Cl. 21 - *02*
U.S. Cl. D21—226

388,146
ROLLER POLE
Dale Lopez Reed, 114 3rd Ave., Tawas City, Mich. 48763
Filed Feb. 28, 1997, Ser. No. 67,111
Term of patent 14 years
LOC (6) Cl. 21 - *02*
U.S. Cl. D21—230

388,147
HUMOROUS NOVELTY ITEM
Kimberly R. Knight, 747 W. Fletcher, Orange, Calif. 92865, and Mehrad Sami, 739 Langtree La., Anaheim Hills, Calif. 92807
Filed Aug. 29, 1995, Ser. No. 43,194
Term of patent 14 years
LOC (6) Cl. 21 - *01*
U.S. Cl. D21—240

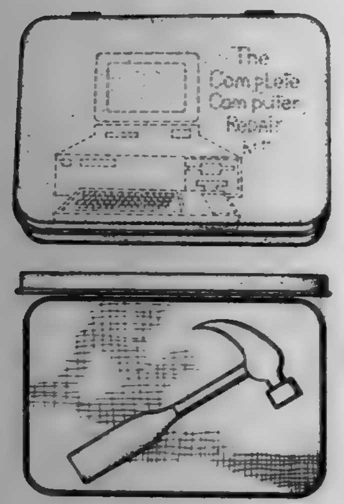

388,148
PLAYGROUND SLIDE
Wesley D. Sutton; Thomas R. Norquist, both of Fort Payne, and Brian Henry, Rainsville, all of Ala., assignors to Game Time, Inc., Fort Payne, Ala.
Filed Jan. 10, 1997, Ser. No. 64,770
Term of patent 14 years
LOC (6) Cl. 21 - *03*
U.S. Cl. D21—244

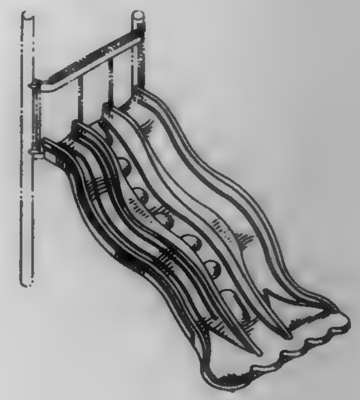

388,149
MECHANICAL TRIGGER LOCK
F. Richard Langner, P.O. Box 14706, Scottsdale, Ariz. 85267
Filed Nov. 19, 1996, Ser. No. 62,999
Term of patent 14 years
LOC (6) Cl. 22 - *01*
U.S. Cl. D22—108

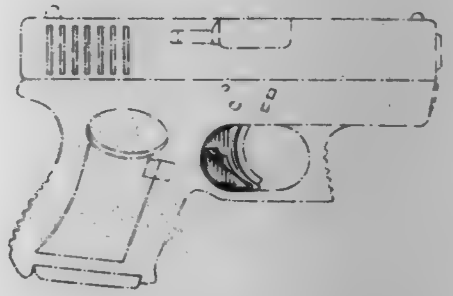

388,150
S SHAPED THROWING KNIFE
Louis S. Glesser, Golden, Colo., assignor to Spyderco, Inc., Golden, Colo.
Filed Sep. 11, 1996, Ser. No. 59,478
Term of patent 14 years
LOC (6) Cl. 22 - *01*
U.S. Cl. D22—118

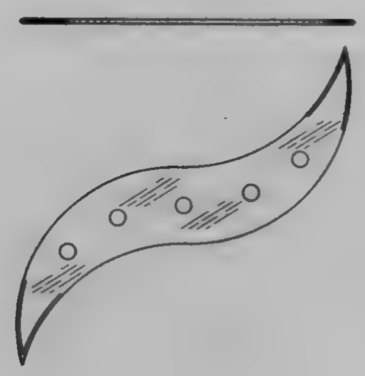

388,151
BIRD REPELLANT
Jack B. Shaw, 2710 Bedford St., Johnson, Pa. 15904
Filed Feb. 14, 1996, Ser. No. 50,297
Term of patent 14 years
LOC (6) Cl. 22 - *06*
U.S. Cl. D22—120

388,152
REEL SEAT FOR FISHING ROD
Ryuichi Ohmura, Shizuoka, Japan, assignor to Fuji Kogyo Co., Ltd., Shizuoka-ken, Japan
Filed Oct. 30, 1996, Ser. No. 61,740
Term of patent 14 years
LOC (6) Cl. 22 - *05*
U.S. Cl. D22—142

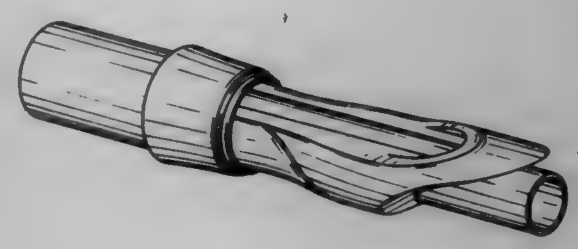

388,153
FISHING ROD HOLDER AND BALANCER
William P. Snyder, P.O. Box 646, Hermiston, Oreg. 97838
Filed Dec. 20, 1996, Ser. No. 63,983
Term of patent 14 years
LOC (6) Cl. 22 - *05*
U.S. Cl. D22—147

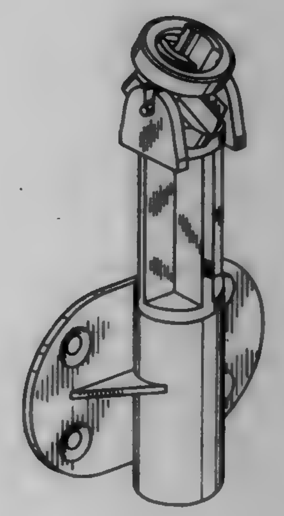

388,154

WATER FILTER HOUSING

William A. Pesa, Wooster, Ohio, assignor to Rubbermaid Incorporated, Wooster, Ohio

Filed Nov. 4, 1996, Ser. No. 63,051

Term of patent 14 years

LOC (6) Cl. 23 - *01*

U.S. Cl. D23—209

388,155

BATHTUB FAUCET

Adolf Gottwald, Iserlohn, and Hans Lobermeier, Menden, both of Germany, assignors to Friedrich Grohe Aktiengesellschaft, Hemer, Germany

Filed Apr. 3, 1995, Ser. No. 37,070

Claims priority, application Germany, Oct. 31, 1994, M9408504.8

Term of patent 14 years

LOC (6) Cl. 23 - *01*

U.S. Cl. D23—238

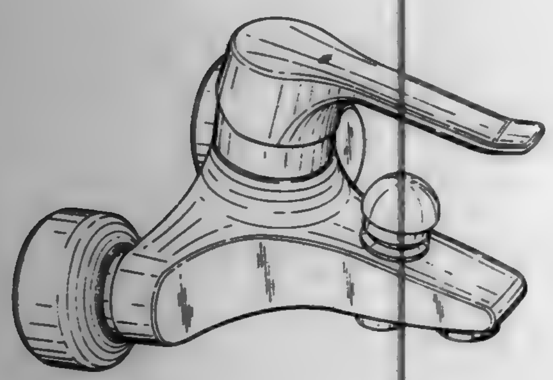

388,156

FAUCET

Loran R. Hill, Indianapolis, and Anthony G. Spangler, Greensburg, both of Ind., assignors to Masco Corporation of Indiana, Indianapolis, Ind.

Filed Aug. 30, 1996, Ser. No. 59,056

Term of patent 14 years

LOC (6) Cl. 23 - *01*

U.S. Cl. D23—238

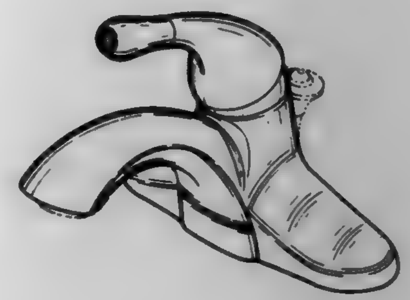

388,157

WALL MOUNT FAUCET BODY

Witold Bauer, Westlake, and Mark Sindelar, Shaker Heights, both of Ohio, assignors to Moen Incorporated, North Olmsted, Ohio

Filed Dec. 16, 1996, Ser. No. 63,765

Term of patent 14 years

LOC (6) Cl. 23 - *01*

U.S. Cl. D23—238

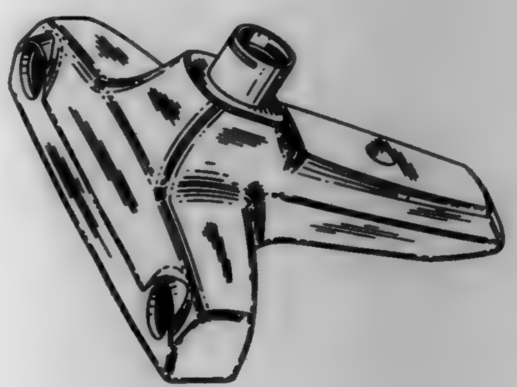

388,158

FAUCET WITH PULL-OUT SPOUT

Frederic C. Doughty, South Pasadena, and Darren M. Mark, Valencia, both of Calif., assignors to Emhart Inc., Newark, Del.

Filed Mar. 5, 1997, Ser. No. 67,505

Term of patent 14 years

LOC (6) Cl. 23 - *01*

U.S. Cl. D23—238

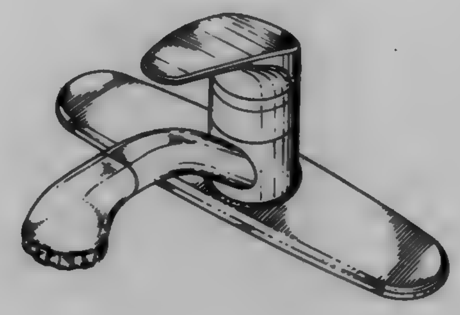

388,159

BIDET

Marcelo Garza Laguera Garza, Irapuato, Mexico, assignor to Procesadora de Ceramica de Mexico, S.A. DE C. V., Mexico

Filed Aug. 15, 1996, Ser. No. 58,466

Claims priority, application Mexico, Feb. 15, 1996, 96/30

Term of patent 14 years

LOC (6) Cl. 23 - *02*

U.S. Cl. D23—295

388,160

TOILET TRAINING DEVICE

Teresa Simmons, 354 N. High, Wichita, Kans. 67203

Filed Oct. 25, 1996, Ser. No. 61,505

Term of patent 14 years

LOC (6) Cl. 23 - *02*

U.S. Cl. D23—297

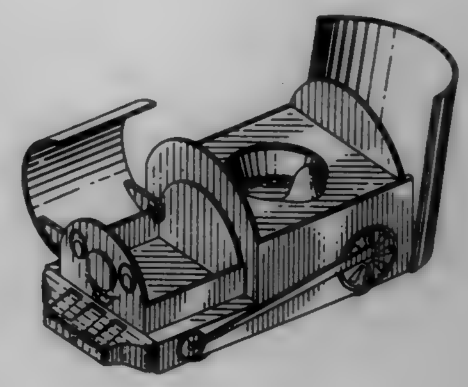

388,161

WATER HEATER

Carl Thweatt, South Haven, Mich., assignor to Sherwood-Templeton Coal Company, Inc., Indianapolis, Ind.

Filed May 14, 1996, Ser. No. 54,401

Term of patent 14 years

LOC (6) Cl. 23 - *03*

U.S. Cl. D23—314

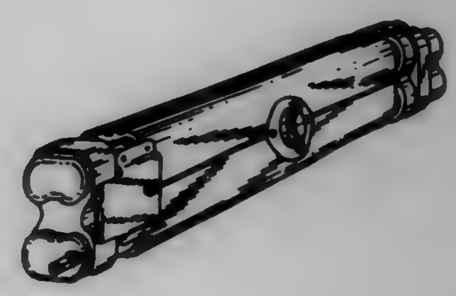

388,162
HUMIDIFIER

Bernard Chiu, Wellesley, Mass.; Jui-Shang Wang, Taipei, Taiwan; John Loungan, Natick, Mass.; Robert L. Marvin, Jr., Farmington, and Richard M. O'Grady, Southington, both of Conn., assignors to Duracraft Corp., Southborough, Mass.

Filed Sep. 2, 1994, Ser. No. 27,962

Term of patent 14 years

LOC (6) Cl. 23 - *04*

U.S. Cl. D23—356

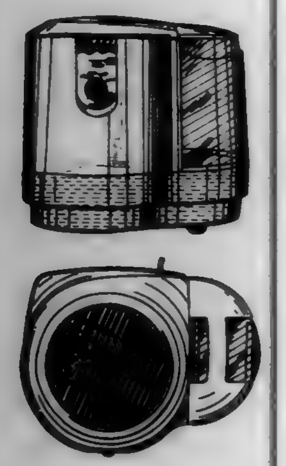

388,163
WINDOW FAN

Joseph M. Cumming, Cohasset, Mass., assignor to Holmes Products Corp., Milford, Mass.

Continuation-in-part of Ser. No. 5,679, Mar. 9, 1993, abandoned. This application Apr. 23, 1993, Ser. No. 7,483

Term of patent 14 years

LOC (6) Cl. 23 - *04*

U.S. Cl. D23—370

388,164
COMBINED CEILING FAN AND LIGHT KIT

Mark Pickett, Rancho Palos Verdes, Calif., assignor to Minka Lighting, Inc., Corona, Calif.

Filed Oct. 18, 1996, Ser. No. 61,217

Term of patent 14 years

LOC (6) Cl. 23 - *04*

U.S. Cl. D23—377

388,165
CEILING FAN BLADE IRON

Aaron M. Johnson, Albuquerque, N. Mex., assignor to National Industries, Inc., Albuquerque, N. Mex.

Filed Apr. 23, 1996, Ser. No. 53,621

Term of patent 14 years

LOC (6) Cl. 23 - *04*

U.S. Cl. D23—411

388,166
CEILING FAN HOUSING

Ching Feng Lu, P.O. Box 63-99, Taichung, Taiwan

Filed Dec. 26, 1996, Ser. No. 64,286

Term of patent 14 years

LOC (6) Cl. 23 - *04*

U.S. Cl. D23—411

388,167
BLOOD LOSS ESTIMATOR

Robert Caradonna, and Daniel Stairs, both of 458 Kauffman Rd., Indiana, Pa. 15701

Filed Mar. 26, 1996, Ser. No. 52,229

Term of patent 14 years

LOC (6) Cl. 24 - *01*

U.S. Cl. D24—107

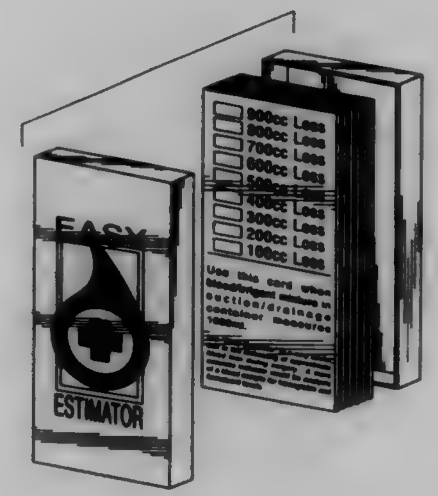

388,168
FLEXIBLE MULTIPLE COMPARTMENT MEDICAL CONTAINER

Ward W. Barney, Mission Viejo; Mark R. McLonis, Playa Del Rey; Steven L. Smith, Lake Forest; Ernest L. Wooldridge; Walter A. York, both of Mission Viejo, and H. Theodore Young, Dana Point, all of Calif., assignors to McGaw, Inc., Irvine, Calif.

Filed May 13, 1996, Ser. No. 54,344

Term of patent 14 years

LOC (6) Cl. 24 - *04*

U.S. Cl. D24—118

388,169
COMBINED SACRUM AND ILIA SUPPORT PAD

Don W. Harris, 12770 Maricopa Way, Jacksonville, Fla. 32246

Filed Jul. 28, 1995, Ser. No. 41,962

Term of patent 14 years

LOC (6) Cl. 24 - *04*

U.S. Cl. D24—133

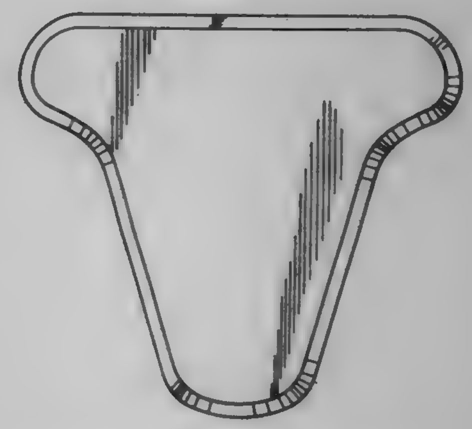

388,170
SURGICAL HANDPIECE
Douglas D. Sjostrom, Reading, Mass., assignor to Smith & Nephew Endoscopy, Inc., Andover, Mass.
Filed Oct. 31, 1995, Ser. No. 45,831
Term of patent 14 years
LOC (6) Cl. 24 - *02*
U.S. Cl. D24—133

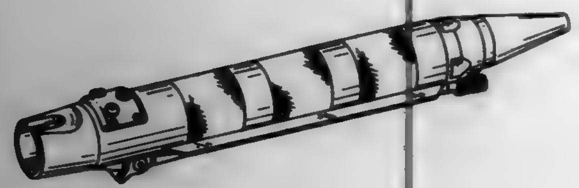

388,171
INSTRUMENT FOR IMPLANTATIONS FOR MANUAL USE
Guy Fekete, Versailles, France, assignor to Roussel Uclaf, Romainville, France
Filed Dec. 21, 1995, Ser. No. 48,162
Claims priority, application France, Jun. 23, 1995, 953484
Term of patent 14 years
LOC (6) Cl. 24 - *01*
U.S. Cl. D24—133

388,172
NASAL DILATOR
Bret Cipes, Eustis, Fla., assignor to E-Z Kare Good Health Systems, Inc., Tavares, Fla.
Filed Jul. 27, 1995, Ser. No. 41,955
Term of patent 14 years
LOC (6) Cl. 24 - *04*
U.S. Cl. D24—135

388,173
ANKLE BANDAGE
Thomas Eriksson, Tyreso, Sweden, assignor to Rehband Anatomiska AB, Sollentuna, Sweden
Filed Aug. 21, 1995, Ser. No. 42,920
Claims priority, application Sweden, Feb. 22, 1995, 95-0373
Term of patent 14 years
LOC (6) Cl. 24 - *04*
U.S. Cl. D24—192

388,174
COMBINED ANKEL AND FOOT ORTHOSIS WITH ORTHOWEDGE FOR WEARING AT NIGHT
William S. Stano, 220 W. Jefferson St., Boise, Id. 83702
Filed Jan. 30, 1997, Ser. No. 65,494
Term of patent 14 years
LOC (6) Cl. 24 - *04*
U.S. Cl. D24—192

388,175
MASSAGER
Sen-Nen Lie, Kowloon, Hong Kong, assignor to Kolvin Industries Limited, Hong Kong, Hong Kong
Filed Jun. 30, 1994, Ser. No. 25,332
Claims priority, application United Kingdom, Jan. 6, 1994, 2036174
Term of patent 14 years
LOC (6) Cl. 24 - *04*
U.S. Cl. D24—215

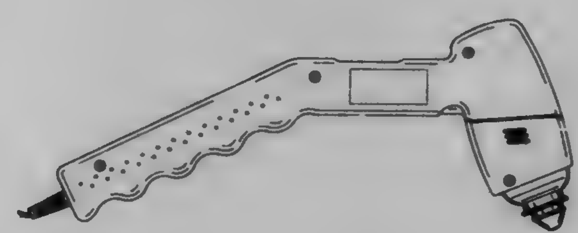

388,176
CHROMATOGRAPHY VIAL
Daniel A. Lodge, Deerfield, N.J., assignor to Q.I.S., Inc., Rosenhayn, N.J.
Filed Jun. 24, 1996, Ser. No. 56,108
Term of patent 14 years
LOC (6) Cl. 24 - *01*
U.S. Cl. D24—224

388,177
HUNTER'S BLIND
Paul C. Murray, 6002 Moultrie Rd., Albany, Ga. 31705
Filed May 17, 1996, Ser. No. 54,630
Term of patent 14 years
LOC (6) Cl. 25 - *03*
U.S. Cl. D25—16

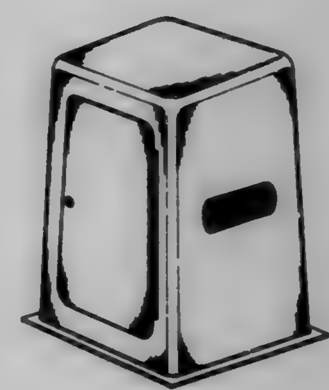

388,178
DOOR
Isabelle Sadovenko, Paris, France, assignor to Saint-Gobain Vitrage, Courbevoie, France
Filed Nov. 30, 1995, Ser. No. 47,254
Claims priority, application France, May 31, 1995, 953 071
Term of patent 14 years
LOC (6) Cl. 25 - 02
U.S. Cl. D25—48

388,179
BUILDING ELEMENT FOR A CANOPY FASCIA
Philip Toovey, Banbury, United Kingdom, assignor to Fina Europe Societe Anonyne
Filed Jan. 12, 1996, Ser. No. 49,636
Claims priority, application WIPO, Jul. 12, 1995, DM/033515
Term of patent 14 years
LOC (6) Cl. 25 - 02
U.S. Cl. D25—56

388,180
SWIMMING POOL COVER SUPPORT
Richard Weihbrecht, 550 Prospect La., Plymouth Township, Pa. 18651
Filed Oct. 25, 1996, Ser. No. 61,554
Term of patent 14 years
LOC (6) Cl. 25 - *02*
U.S. Cl. D25—61

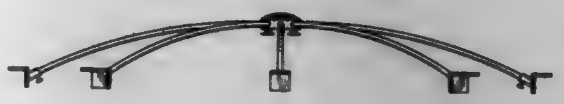

388,181
BAR PRIMARILY INTENDED FOR GLAZING
David Michael Payton, Horsemans Green, Nr. Whitchurch; Andrew Charles McDougall, and Peter Figaro Mayes, both of Bridgnorth, all of United Kingdom, assignors to Davandian Limited, Shropshire, England
Filed Nov. 7, 1996, Ser. No. 62,076
Claims priority, application United Kingdom, May 10, 1996, 2056228
Term of patent 14 years
LOC (6) Cl. 25 - *01*
U.S. Cl. D25—121

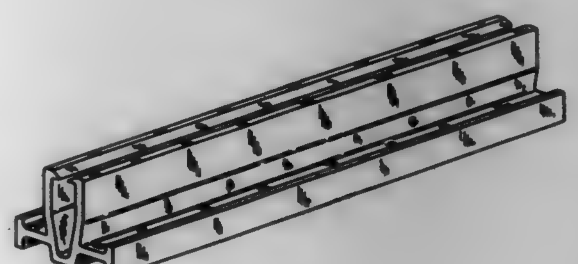

388,182
COVER STRIP PRIMARILY INTENDED FOR GLAZING
David Michael Payton, NR. Whitchurch, and Andrew Charles McDougall, Bridgnorth, both of England, assignors to Davandian Limited, Shropshire, England
Filed Nov. 7, 1996, Ser. No. 62,077
Claims priority, application United Kingdom, May 10, 1996, 2056226
Term of patent 14 years
LOC (6) Cl. 25 - *01*
U.S. Cl. D25—121

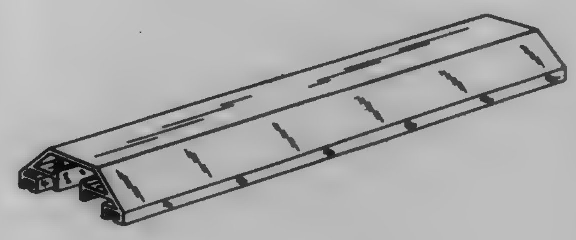

388,183
BAR PRIMARILY INTENDED FOR GLAZING
David Michael Payton, Nr. Whitchurch; Andrew Charles McDougall, and Peter Figaro Mayes, both of Bridgnorth, all of England, assignors to Davandian Limited, Shropshire, England
Filed Nov. 7, 1996, Ser. No. 62,100
Claims priority, application United Kingdom, May 10, 1996, 2056227
Term of patent 14 years
LOC (6) Cl. 25 - *01*
U.S. Cl. D25—121

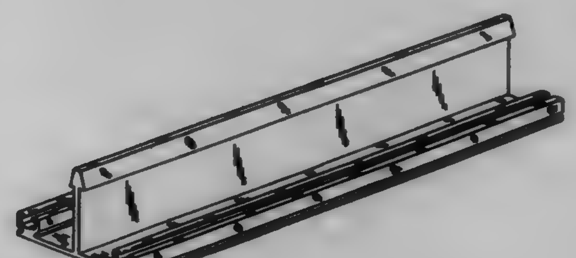

388,184
Patent Not Issued For This Number

388,185
Patent Not Issued For This Number

388,186
WINDOW COMPONENT EXTRUSION
Lorane Goss, Slippery Rock, Pa., assignor to Mikron Industries, Inc., Kent, Wash.
Filed Oct. 18, 1996, Ser. No. 61,243
Term of patent 14 years
LOC (6) Cl. 25 - *01*
U.S. Cl. D25—124

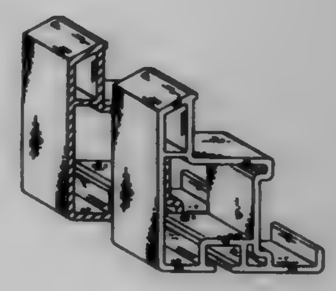

388,187
WINDOW COMPONENT EXTRUSION
Lorane Goss, Slippery Rock, Pa., assignor to Mikron Industries, Inc., Kent, Wash.
Filed Oct. 18, 1996, Ser. No. 61,244
Term of patent 14 years
LOC (6) Cl. 25 - *01*
U.S. Cl. D25—124

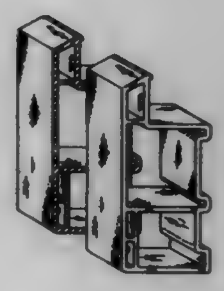

388,188
WINDOW COMPONENT EXTRUSION
Lorane Goss, Slippery Rock, Pa., assignor to Mikron Industries, Inc., Kent, Wash.
Filed Oct. 18, 1996, Ser. No. 61,250
Term of patent 14 years
LOC (6) Cl. 25 - *01*
U.S. Cl. D25—124

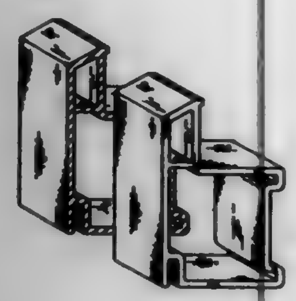

388,189
WINDOW COMPONENT EXTRUSION
Lorane Goss, Slippery Rock, Pa., assignor to Mikron Industries, Inc., Kent, Wash.
Filed Oct. 18, 1996, Ser. No. 61,260
Term of patent 14 years
LOC (6) Cl. 25 - *01*
U.S. Cl. D25—124

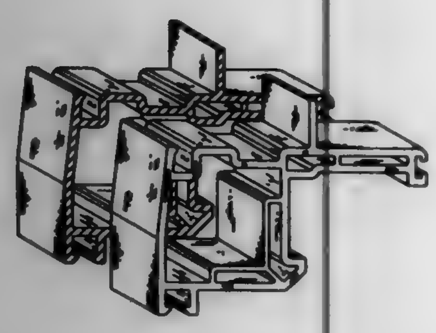

388,190
WINDOW COMPONENT EXTRUSION
Lorane Goss, Slippery Rock, Pa., assignor to Mikron Industries, Inc., Kent, Wash.
Filed Oct. 18, 1996, Ser. No. 61,261
Term of patent 14 years
LOC (6) Cl. 25 - *01*
U.S. Cl. D25—124

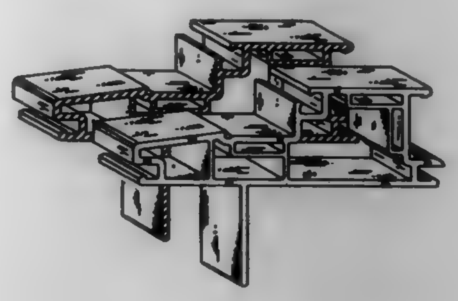

388,191
WINDOW COMPONENT EXTRUSION
Robert B. Jarrell, Seattle, Wash., assignor to Mikron Industries, Inc., Kent, Wash.
Filed Oct. 29, 1996, Ser. No. 61,716
Term of patent 14 years
LOC (6) Cl. 25 - *01*
U.S. Cl. D25—124

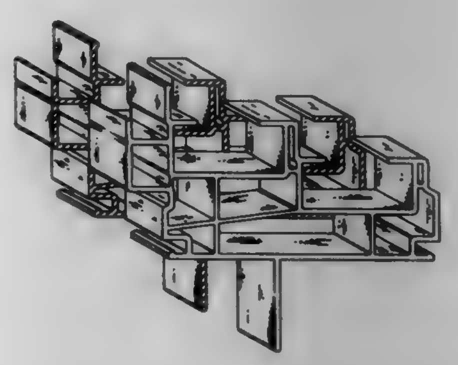

388,192
PYLON
Ian Ritchie, London, England; Kathryn Gustafson, and Henry Bardsley, both of Paris, France, assignors to Electricite de France, Paris, France
Filed Sep. 25, 1995, Ser. No. 44,418
Claims priority, application France, Mar. 23, 1995, 95 1745
Term of patent 14 years
LOC (6) Cl. 25 - *01*
U.S. Cl. D25—127

388,193
FACE PLATE
Ernesto Villaescusa, Mount Isa, Australia, assignor to Mount Isa Mines Limited, Brisbane, Australia
Filed Apr. 4, 1996, Ser. No. 52,631
Claims priority, application Australia, Dec. 10, 1995, 3319/95
Term of patent 14 years
LOC (6) Cl. 25 - *01*
U.S. Cl. D25—133

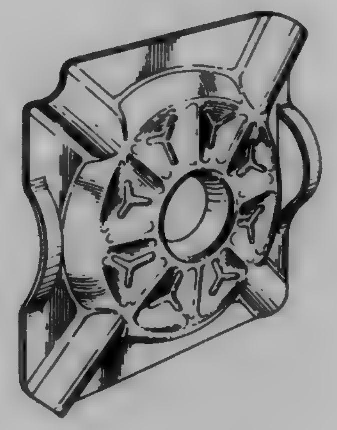

388,194
MULTI PURPOSE PATIO UTILITY POLE
Robert John Straub, P.O. Box 142, Sauk Centre, Minn. 56378
Filed Dec. 11, 1995, Ser. No. 47,661
Term of patent 14 years
LOC (6) Cl. 25 - *01*
U.S. Cl. D25—134

388,195
SHINGLE
Marcia G. Hannah; Michael J. Noone, both of Wayne; Kermit E. Stahl, North Wales; George W. Mehrer, Oreland, and Joseph Quaranta, Yardley, all of Pa., assignors to CertainTeed Corporation, Valley Forge, Pa.
Filed Mar. 17, 1995, Ser. No. 36,292
Term of patent 14 years
LOC (6) Cl. 25 - *01*
U.S. Cl. D25—139

388,196
OAK TEXTURED CONTOURED PANEL
Dale Edward Schafernak, Palatine; Steven K. Lynch, St. Charles, and Raymond H. Pittman, Batavia, all of Ill., assignors to Masonite Corporation, Chicago, Ill.
Filed Aug. 16, 1994, Ser. No. 27,199
The portion of the term of this patent subsequent to Aug. 12, 2011, has been disclaimed.
Term of patent 14 years
LOC (6) Cl. 25 - *01*
U.S. Cl. D25—150

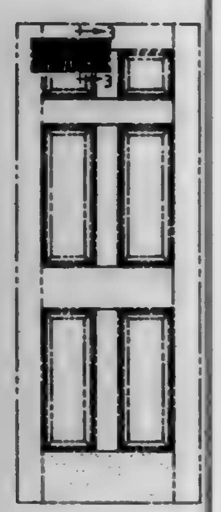

388,197
CANDLE HOLDER
Leo Cardosi, Aiken, S.C., assignor to Gorham Bronze, Aiken, S.C.
Filed Mar. 31, 1995, Ser. No. 36,971
Term of patent 14 years
LOC (6) Cl. 26 - *01*
U.S. Cl. D26—9

388,198
FIBER OPTIC ACCENT LIGHT
Michael E. Weber, Blacksburg, Va., assignor to Virginia Tech Intellectual Properties, Inc., Blacksburg, Va.
Filed Jan. 15, 1997, Ser. No. 65,001
Term of patent 14 years
LOC (6) Cl. 26 - *05*
U.S. Cl. D26—27

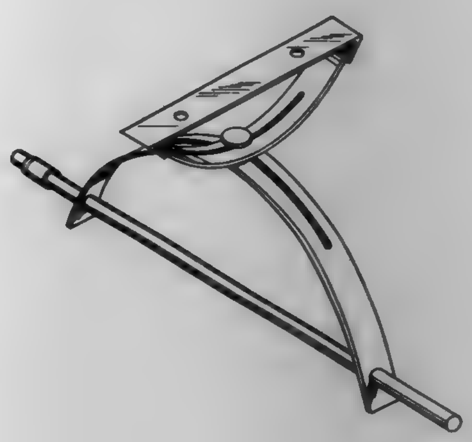

388,199
BICYCLE SPOKE ATTACHABLE LIGHT
Josue A. Munoz, 11545 Ranchito St., El Monte, Calif. 91721
Filed Oct. 12, 1995, Ser. No. 45,197
Term of patent 14 years
LOC (6) Cl. 26 - *02*
U.S. Cl. D26—28

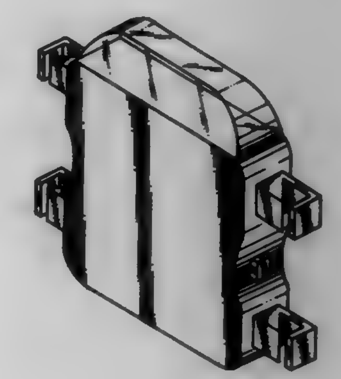

388,200
EXTERIOR SURFACE CONFIGURATION OF AN AUTOMOBILE TAIL LIGHT ASSEMBLY
Johann Tomforde, Sindelfingen; Jens Manske, Weil der Stadt, and Christoph Henrici, Leonberg, all of Germany, assignors to MC Micro Compact Car Aktingesellschaft, Biel, Switzerland
Filed Feb. 7, 1997, Ser. No. 66,484
Claims priority, application Germany, Aug. 28, 1996, M96 07 317.9
Term of patent 14 years
LOC (6) Cl. 26 - *06*
U.S. Cl. D26—28

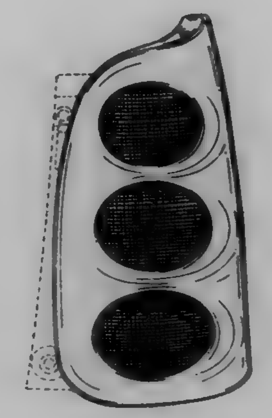

388,201
FLASHLIGHT
Donald W. Zurwelle, Lutherville, Md., assignor to Black & Decker Inc., Newark, Del.
Division of Ser. No. 42,511, Aug. 11, 1995. This application Dec. 6, 1996, Ser. No. 63,188
Term of patent 14 years
LOC (6) Cl. 26 - *02*
U.S. Cl. D26—37

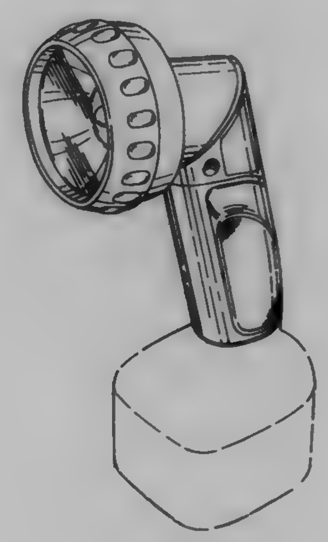

388,202
FLASHLIGHT
Shoei-Shuh Shiau, No. 10, Alley 1, Lane 551, Sec. 1, Wan-Shou Rd., Guei-Shan Hsiang, Tao-Yuan Hsien, Taiwan
Filed Dec. 13, 1996, Ser. No. 63,725
Term of patent 14 years
LOC (6) Cl. 26 - *02*
U.S. Cl. D26—37

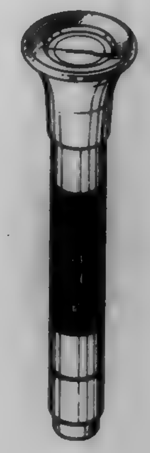

388,203
COMBINED FAN, FLUORESCENT LIGHT, RADIO AND CLOCK
Yiu Kwong Wan, New Territories, Hong Kong, assignor to Fee Tat Holdings (H.K.) Limited, Hong Kong, Hong Kong
Filed Nov. 8, 1996, Ser. No. 62,172
Claims priority, application United Kingdom, May 9, 1996, 2056207
Term of patent 14 years
LOC (6) Cl. 26 - *02*
U.S. Cl. D26—38

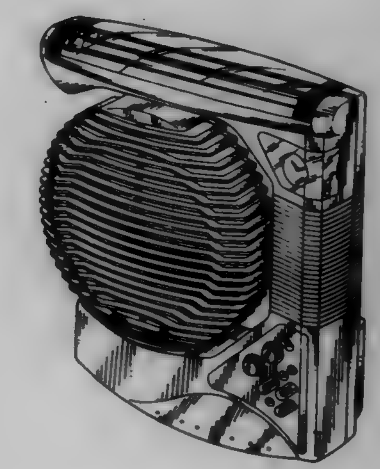

388,204
WATCH
Haruya Oba, Kawagoe, Japan, assignor to Citizen Watch Co., Ltd., Tokyo, Japan
Filed May 18, 1995, Ser. No. 39,115
Term of patent 14 years
LOC (6) Cl. 10 - *02*
U.S. Cl. D10—39

388,205
FLEXIBLE LIGHT
Anthony Brooks Rorke, Guilford; Craig A. DuBois, Trumbull, both of Conn., and Thomas Swyst, Arlington, Mass., assigners to Black & Decker Inc., Newark, Del.
Filed Jan. 9, 1997, Ser. No. 64,718
Term of patent 14 years
LOC (6) Cl. 26 - *02*
U.S. Cl. D26—43

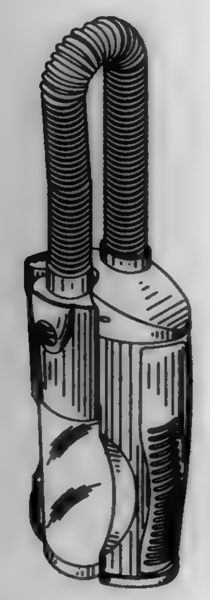

388,206
FLASHLIGHT
Richard J. Carbone, Southbury, and David W. Kaiser, North Haven, both of Conn., assignors to Black & Decker Inc., Newark, Del.
Filed Jan. 10, 1997, Ser. No. 64,804
Term of patent 14 years
LOC (6) Cl. 26 - *02*
U.S. Cl. D26—43

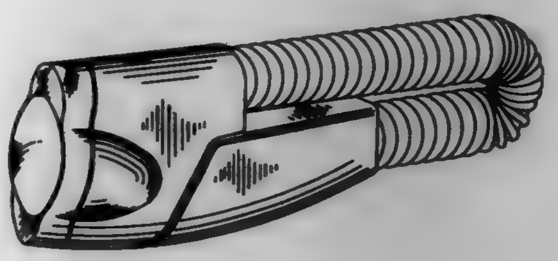

388,207
TORCH
Herve Houplain, Paris, France, assignor to Impex Handelsgesellschaft Mbh (F.E.) Ltd., Hong Kong
Filed Feb. 10, 1997, Ser. No. 66,262
Term of patent 14 years
LOC (6) Cl. 26 - *02*
U.S. Cl. D26—48

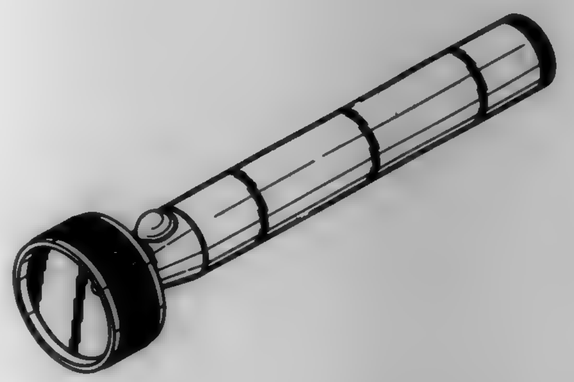

388,208
LAMP BASE WITH CLOCK
Ron Nichols, Bloomfield, Mich., assignor to Catalina Lighting, Inc., Miami, Fla.
Filed Jan. 21, 1997, Ser. No. 65,086
Term of patent 14 years
LOC (6) Cl. 26 - *05*
U.S. Cl. D26—54

388,209
WORK LIGHT FIXTURE
M. Gary Grossman, Riverside, Conn.; Edward H. Meisner, Short Hills, N.J.; Michael P. Ballone, New Providence, N.J., and John E. Kiely, Morristown, N.J., assignors to Regent Lighting Corporation, Burlington, N.C.
Filed Oct. 25, 1996, Ser. No. 61,592
Term of patent 14 years
LOC (6) Cl. 26 - *05*
U.S. Cl. D26—63

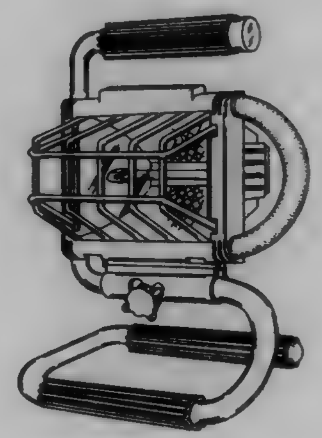

388,210
ADJUSTABLE DESK LAMP
Roger Yang, Taipei Hsien, Taiwan, assignor to Be-Yang Industrial Corp., Taipei Hsien, Taiwan
Filed Dec. 9, 1996, Ser. No. 63,468
Term of patent 14 years
LOC (6) Cl. 26 - *05*
U.S. Cl. D26—65

388,211
ADJUSTABLE FLOOR LAMP
Roger Yang, Taipei Hsien, Taiwan, assignor to Be-Yang Industrial Corp., Taipei Hsien, Taiwan
Filed Dec. 9, 1996, Ser. No. 63,469
Term of patent 14 years
LOC (6) Cl. 26 - *05*
U.S. Cl. D26—65

388,212
PARKING LOT LUMINAIRE
Bonnie J. Brohard, Hebron; Herbert A. Fouke, Newark, and Peter A. Koloski, Columbus, all of Ohio, assignors to Holophane Corporation, Newark, Ohio
Division of Ser. No. 43,838, Aug. 30, 1995. This application Oct. 18, 1996, Ser. No. 61,224
Term of patent 14 years
LOC (6) Cl. 26 - *03*
U.S. Cl. D26—71

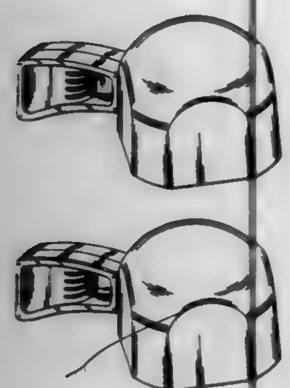

388,213
LIGHTING FIXTURE
Sandra E. Littman, and Kirina S. Kaufman, both of New York, N.Y., assignors to Sandy Littman, Inc., New York, N.Y.
Filed Dec. 26, 1995, Ser. No. 48,309
Term of patent 14 years
LOC (6) Cl. 26 - *05*
U.S. Cl. D26—85

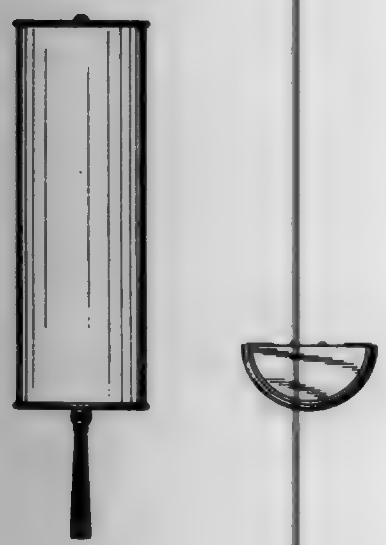

388,214
CHANDELIER
Pasquale Miranda, 154 Sleepy Hollow Rd., Briarcliff Manor, N.Y. 10510
Filed Dec. 23, 1996, Ser. No. 64,122
Term of patent 14 years
LOC (6) Cl. 26 - *05*
U.S. Cl. D26—81

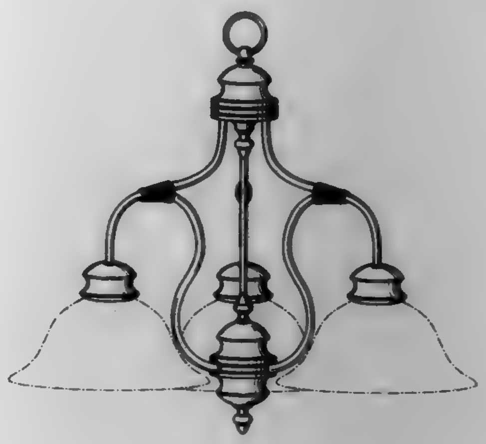

388,215
CEILING LAMP
Keen Hsu, Taichung, Taiwan, assignor to Bright Yin Huey Co., Ltd., Taichung, Taiwan
Filed Dec. 10, 1996, Ser. No. 63,546
Term of patent 14 years
LOC (6) Cl. 26 - *05*
U.S. Cl. D26—85

388,216
CEILING LAMP
Keen Hsu, Taichung, Taiwan, assignor to Bright Yin Huey Co., Ltd., Taichung, Taiwan
Filed Dec. 10, 1996, Ser. No. 63,547
Term of patent 14 years
LOC (6) Cl. 26 - *05*
U.S. Cl. D26—85

388,217
CEILING LAMP
Keen Hsu, Taichung, Taiwan, assignor to Bright Yin Huey Co., Ltd., Taichung, Taiwan
Filed Dec. 10, 1996, Ser. No. 64,197
Term of patent 14 years
LOC (6) Cl. 26 - *05*
U.S. Cl. D26—85

388,218
WALL MOUNTED LAMP
Keen Hsu, Taichung, Taiwan, assignor to Bright Yin Huey Co., Ltd., Taichung, Taiwan
Filed Nov. 15, 1996, Ser. No. 62,461
Term of patent 14 years
LOC (6) Cl. 26 - *05*
U.S. Cl. D26—87

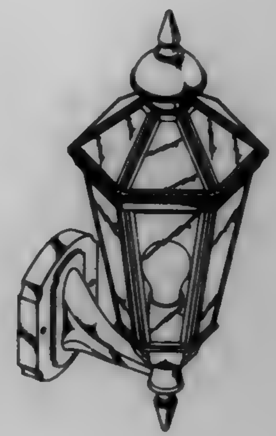

388,219
WALL MOUNTED LAMP
Keen Hsu, Taichung, Taiwan, assignor to Bright Yin Huey Co., Ltd., Taichung, Taiwan
Filed Nov. 15, 1996, Ser. No. 62,462
Term of patent 14 years
LOC (6) Cl. 26 - *05*
U.S. Cl. D26—87

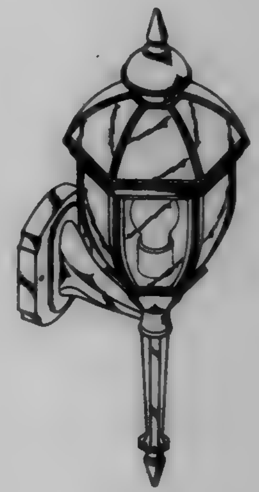

388,220
WALL MOUNTED LAMP
Keen Hsu, Taichung, Taiwan, assignor to Bright Yin Huey Co., Ltd., Taichung, Taiwan
Filed Nov. 15, 1996, Ser. No. 62,463
Term of patent 14 years
LOC (6) Cl. 26 - *05*
U.S. Cl. D26—87

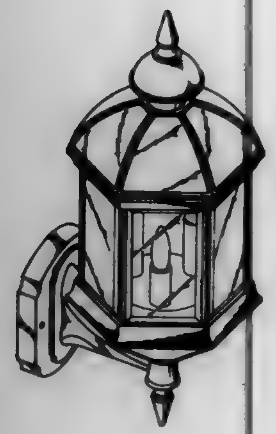

388,221
FLOOR LAMP
David Lo, Taipei Hsieh, Taiwan, assignor to Holmes Products Corp, Milford, Mass.
Filed Aug. 5, 1996, Ser. No. 57,973
Term of patent 14 years
LOC (6) Cl. 26 - *05*
U.S. Cl. D26—102

388,222
LAMP WITH TAPERED HEXAGONAL STEM
Barbara Barry, Los Angeles, Calif., assignor to Boyd Lighting Company, San Francisco, Calif.
Filed May 15, 1996, Ser. No. 54,574
Term of patent 14 years
LOC (6) Cl. 26 - *05*
U.S. Cl. D26—112

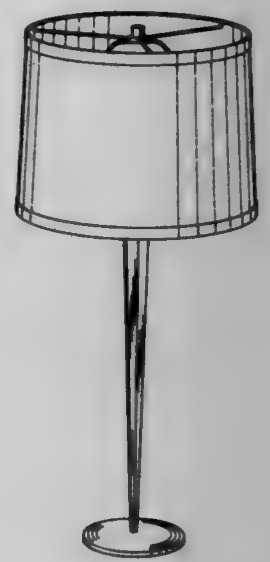

388,223
CHANDELIER ARM
Pasquale Miranda, 154 Sleepy Hollow Rd., Braircliff Manor, N.Y. 10510
Filed Dec. 23, 1996, Ser. No. 64,184
Term of patent 14 years
LOC (6) Cl. 26 - *05*
U.S. Cl. D26—145

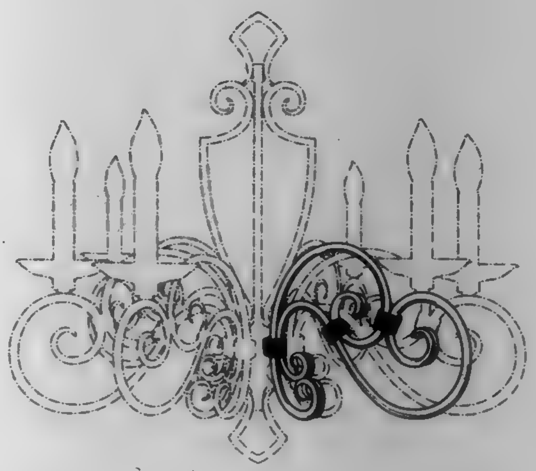

388,224
TAPERED HEXAGONAL STEM FOR LAMP
Barbara Barry, Los Angeles, Calif., assignor to Boyd Lighting Company, San Francisco, Calif.
Filed May 15, 1996, Ser. No. 54,567
Term of patent 14 years
LOC (6) Cl. 26 - *05*
U.S. Cl. D26—153

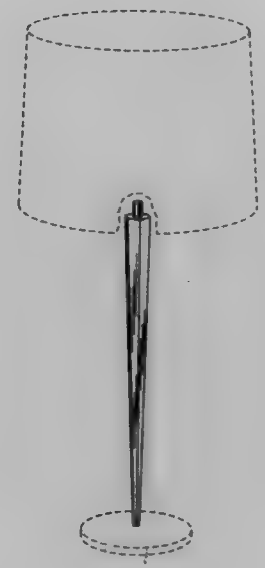

388,225
BURIAL CASKET LID
Patrick Michael Saaf, Batesville, and Scott Alan Schultz, Richmond, both of Ind., assignors to Batesville Casket Company, Inc., Batesville, Ind.
Filed Feb. 6, 1996, Ser. No. 49,998
Term of patent 14 years
LOC (6) Cl. 99 - *00*
U.S. Cl. D99—12

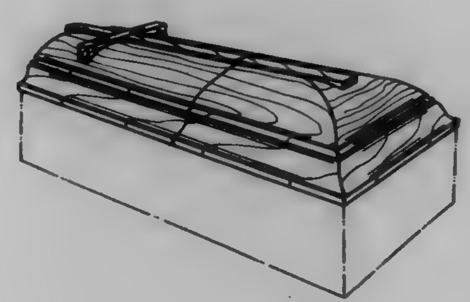

388,226
MEMORIAL FRAME
Tony Giosa, 14929 Keele St., R.R./ #1, King City, Ontario, Canada, L7B 1A3
Filed Jul. 22, 1996, Ser. No. 57,292
Term of patent 14 years
LOC (6) Cl. 99 - *00*
U.S. Cl. D99—17

388,227
AUTOMATIC TELLER MACHINE CABINET
Ernest R. Dallman, 9200 Fanchon Dr., Zionsville, Ind. 46077, and Franklin W. Wehr, Indianapolis, Ind., assignors to Ernest R. Dallman, Indianapolis, Ind.
Filed Nov. 29, 1995, Ser. No. 47,226
Term of patent 14 years
LOC (6) Cl. 99 - *00*
U.S. Cl. D99—28

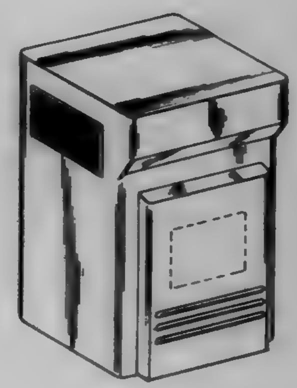

388,228
AUTOMATIC TELLER MACHINE CABINET
Ernest R. Dallman, 9200 Fanchon Dr., Zionsville, Ind. 46077
Filed Feb. 20, 1996, Ser. No. 50,626
Term of patent 14 years
LOC (6) Cl. 99 - *00*
U.S. Cl. D99—28

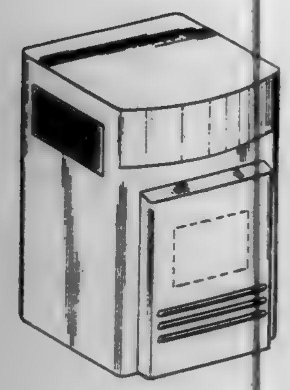

388,229
MULTIMEDIA KIOSK
Michael L. Couch, Venice, Calif., assignor to North Communication, Inc., Marina Del Rey, Calif.
Filed Sep. 18, 1996, Ser. No. 59,963
Term of patent 14 years
LOC (6) Cl. 20 - *03*
U.S. Cl. D99—28

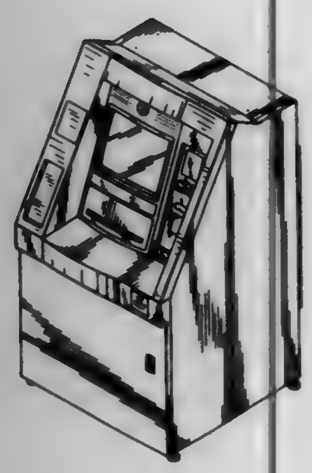

388,230
OUTDOOR INFORMATION KIOSK
Bruce A. Quinn, Beavercreek, Ohio, assignor to NCR Corporation, Dayton, Ohio
Filed Nov. 7, 1996, Ser. No. 62,126
Term of patent 14 years
LOC (6) Cl. 99 - *00*
U.S. Cl. D99—28

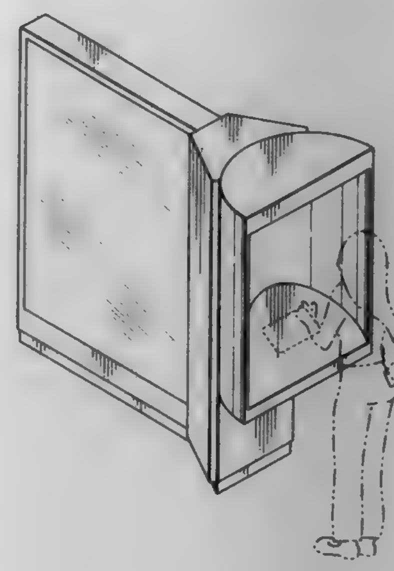

388,231
AUTOMATED BANKING MACHINE
Paul D. Magee, North Canton; Dan J. Delaney, Canton; Kevin R. Liesner, Massillon; Brian S. Wetrich, Canton; Tim E. Kerstetter, Louisville, and John C. Davis, Akron, all of Ohio, assignors to InterBold, North Canton, Ohio
Filed Feb. 14, 1997, Ser. No. 66,506
Term of patent 14 years
LOC (6) Cl. 20 - *01*
U.S. Cl. D99—28

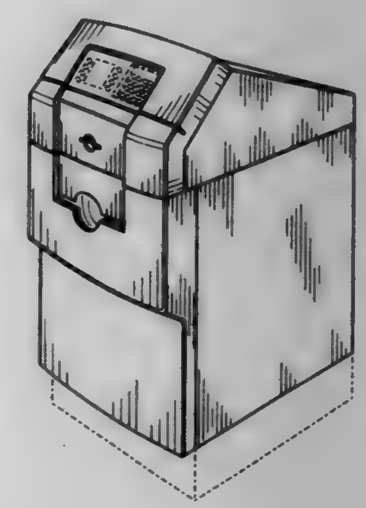

388,232
MAIL BOX
Joseph A. Valentino, 1924 Parker Ave., Holmes, Pa. 19043
Filed Nov. 5, 1996, Ser. No. 62,024
Term of patent 14 years
LOC (6) Cl. 99 - *00*
U.S. Cl. D99—30

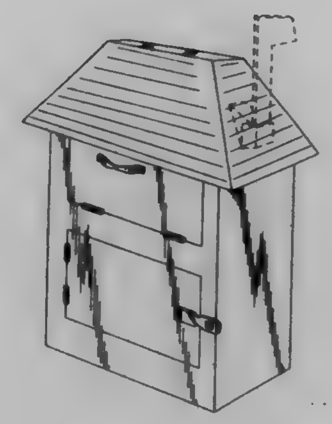

388,233
HOLDER FOR COINS
Patrick Marguerie, Annecy le Vieux, France, assignor to Impex, SA, Shimlin les Abrets, France
Filed Apr. 11, 1995, Ser. No. 37,347
Claims priority, application France, Oct. 12, 1994, DM/030 957
Term of patent 14 years
LOC (6) Cl. 99 - *00*
U.S. Cl. D99—34

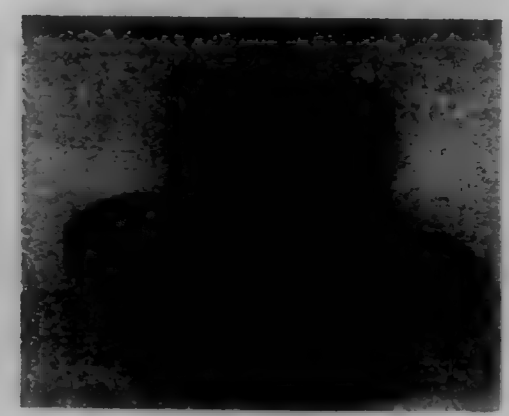

388,234
PAPER CURRENCY HOLDER
Jase Joshua, II, Detroit, Mich., assignor to Word of Faith Christian Center Church, Redord, Mich.
Filed Jan. 11, 1996, Ser. No. 45,110
Term of patent 14 years
LOC (6) Cl. 99 - *00*
U.S. Cl. D99—34

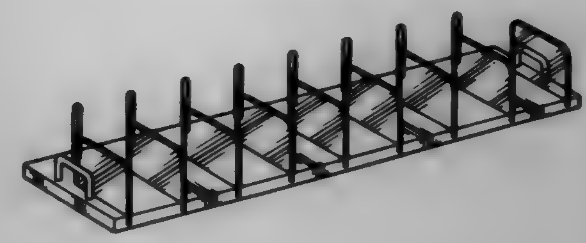

LIST OF PATENTEES

TO WHOM

PATENTS WERE ISSUED ON THE 23rd DAY OF DECEMBER, 1997

NOTE— Arranged in accordance with the first significant character or word of the name (in accordance with city and telephone directory practice).

A. Ahlstrom Corporation: *See—*
Nikkanen, Samuli; and Tanttu, Markku, 5,699,746, Cl. 110-348.000.
A.C. Data Systems of Idaho, Inc.: *See—*
Ryan, Barry D., 5,701,227, Cl. 361-118.000.
A. Menarini S.A.S.: *See—*
Crea, Roberto; Pang, Roy Hoi Loi; Oppermann, Hermann; Keck, Peter C.; Alvarado-Urbina, Gabriel; Wu, Gay-May; and Cohen, Charles M., 5,700,677, Cl. 435-226.000.
Abali, Bulent; and Mraz, Ronald, to International Business Machines Corporation. Method for fine grain adjustments to system time in computer systems. 5,701,446, Cl. 395-551.000.
Abbott Laboratories: *See—*
Cope, Frederick Oliver; Rausch, Linda Sue; Richards, Ernest William; Smith, Michelle Marie; Abbruzzese, Bonnie Chandler; and Pero, Joan Marie, 5,700,782, Cl. 514-21.000.
Masor, Marc Leif; Leach, James Lee; Molitor, Bruce Edward; Benson, John Durand; and Baxter, Jeffrey H., 5,700,590, Cl. 426-656.000.
Minick, Steven E.; Segerson, Judith A.; and Rednour, William C., 5,700,257, Cl. 604-408.000.
Mulchandani, Rohini Prakash; and Mahmoud, Mohamed Ibrahim, 5,700,513, Cl. 426-590.000.
Prieto, Pedro Antonio; Smith, David Fletcher; Cummings, Richard Dale; Kopchick, John Joseph; Mukerji, Pradip; Morgmen, Kelley Wilson; and Pierce, James Michael, 5,700,671, Cl. 435-172.300.
Sarin, Virender Kumar; Absolom, Darryl Robin; and Gupta, Shanker Lal, 5,700,777, Cl. 514-12.000.
Stiehl, Mark A.; Bergstresser, William A.; and Niedospial, John J., 5,700,246, Cl. 604-198.000.
Abbruzzese, Bonnie Chandler: *See—*
Cope, Frederick Oliver; Rausch, Linda Sue; Richards, Ernest William; Smith, Michelle Marie; Abbruzzese, Bonnie Chandler; and Pero, Joan Marie, 5,700,782, Cl. 514-21.000.
Abe, Kimihiro: *See—*
Hatagishi, Yuji; Yamamoto, Toshihiko; Abe, Kimihiro; and Okabe, Toshiaki, 5,700,162, Cl. 439-595.000.
Abe, Koichi: *See—*
Duck, Gary S.; Cheng, Yihao; and Abe, Koichi, 5,701,375, Cl. 385-74.000.
Abe, Naoki: *See—*
Aotsuka, Tomoji; Abe, Naoki; and Ashizawa, Naoki, 5,700,819, Cl. 514-367.000.
Abe, Takashi: *See—*
Kimura, Fujimi; Tanaka, Toyoaki; Dobashi, Akihiko; and Abe, Takashi, 5,700,381, Cl. 216-22.000.
Ablaza, Sheri L.: *See—*
Thackeray, James W.; Sinta, Roger F.; Denison, Mark D.; and Ablaza, Sheri L., 5,700,624, Cl. 430-270.100.
Abogadie, Fe: *See—*
Olivera, Baldomero M.; Rivier, Jean E.F.; Cruz, Lourdes J.; Abogadie, Fe; Hopkins, Chris E.; Dykert, John; and Torres, Josep L., 5,700,778, Cl. 514-12.000.
Abram, Izo, to France Telecom. Optical, opto-electronic or photonic component including at least one laterally confined optical cavity. 5,701,324, Cl. 372-92.000.
Abrams, Andrew L.; and Gumaste, Anand V. Metering and packaging device for dry powders. 5,699,649, Cl. 53-428.000.
Abrams, John S.; Chretien, Isabelle; Lee, Frank D.; and Pearce, Michael K., to Schering Corporations. Human interleukin immunopurification processes. 5,700,915, Cl. 530-413.000.
Absolom, Darryl Robin: *See—*
Sarin, Virender Kumar; Absolom, Darryl Robin; and Gupta, Shanker Lal, 5,700,777, Cl. 514-12.000.
Ackermann, Walter T., to Risdon Corporation. Mascara container having a stirrer and a separate wiper. 5,700,100, Cl. 401-4.000.
Acosta, George M.; and Kumm, Lance, to Neuro Navigational, L.L.C. Bipolar electrode with fluid channels for less invasive neurosurgery. 5,700,262, Cl. 606-48.000.
Acurex Environmental Corporation: *See—*
Dehne, Hans-Joachim, 5,699,839, Cl. 141-248.000.
Adachi, Seiichiro: *See—*
Kato, Katsuhito; and Adachi, Seiichiro, 5,700,002, Cl. 270-58.120.
Adachi, Shuichi: *See—*
Sano, Hisashi; Nakamura, Sou; Sawada, Hideshi; Adachi, Shuichi; and Kasuya, Hideki, 5,701,349, Cl. 381-71.000.
Adachi, Toshio: *See—*
Takatsu, Kazumasa; Kurokawa, Takashi; Echizen, Hiroshi; Koganei, Akio; Sugiyama, Shuichiro; and Adachi, Toshio, 5,700,326, Cl. 118-721.0MW.
Adamic, Raymond J., to Hewlett-Packard Company. Bleed control in ink-jet inks via aqueous phase separation. 5,700,317, Cl. 106-31.580.
Adams, Ernest K., to CJD Investments, Inc. Downhole well lubricant. 5,700,767, Cl. 508-539.000.
Adams, John P.: *See—*
Bennett, Paul F.; Adams, John P.; and Gomez, Arturo C., 5,700,118, Cl. 410-113.000.
Adams, Trevor H.: *See—*
Sheiness, Diana K.; Adams, Trevor H.; Stamm, Michael R.; Cangelosi, Gerard A.; Britschgi, Theresa B.; and Dix, Connie K., 5,700,636, Cl. 435-6.000.
Adams-Brady, David: *See—*
Moynihan, Edward R.; Gailus, David W.; Palifka, Robert G.; Hoisington, Paul A.; Hine, Nathan P.; Adams-Brady, David; Biggs, Melvin L.; McDonald, Marlene M.; Barss, Steven H.; Mackay, Diane; Paulson, Bruce A.; and Mackay, Stephen C., 5,701,148, Cl. 347-92.000.
Adaptec, Inc.: *See—*
Gates, Stillman F., 5,701,409, Cl. 395-183.170.
Addex Design, Inc.: *See—*
Cree, Robert E.; and Rodriguez, Ricardo P., 5,700,488, Cl. 425-72.100.
Adhesives Research, Inc.: *See—*
Zajaczkowski, Michael J.; and Stutzman, Barbara A., 5,700,873, Cl. 125-283.000.
Adoul, Jean-Pierre; and Laflamme, Claude, to Universite de Sherbrooke. Depth-first algebraic-codebook search for fast coding of speech. 5,701,392, Cl. 395-2.280.
Advance Co., Ltd.: *See—*
Iga, Katsumi; Yanai, Shigeo; Okabe, Keiichiro; and Itoh, Masaki, 5,700,481, Cl. 424-449.000.
Advanced Cardiovascular Systems, Inc.: *See—*
Tartaglia, Joseph M.; Loeffler, Joseph P.; and Turnlund, Todd H., 5,700,286, Cl. 623-1.000.
Advanced Micro Devices, Inc.: *See—*
Barsan, Radu; and Lin, Jonathan, 5,700,698, Cl. 437-8.000.
Advanced Risc Machines Limited: *See—*
Jaggar, David Vivian, 5,701,493, Cl. 395-734.000.
Advanced Surface Technology: *See—*
Sheu, Min-Shyan; and Loh, Ih-Houng, 5,700,559, Cl. 428-319.700.
Advanced Vision Technologies, Inc.: *See—*
Potter, Michael D., 5,700,176, Cl. 445-25.000.
Adzima, Leonard J.: *See—*
Flautt, Martin C.; Adzima, Leonard J.; and Mann, Douglas B., 5,700,574, Cl. 428-392.000.
Aerospatiale Societe Nationale Industrielle: *See—*
Geyer, Freddy, 5,699,698, Cl. 74-526.000.
Aesop, Inc.: *See—*
Wasson, Kevin Lee; and Slocum, Alexander Henry, 5,700,092, Cl. 384-115.000.
Agemans, Christine Frieda Augusta: *See—*
François, Marc Karel Jozef; and Agemans, Christine Frieda Augusta, 5,700,814, Cl. 514-321.000.
Agency Of Industrial Science and Technology: *See—*
Fujii, Kanenaga; Kiuchi, Masato; Nagasaka, Hiroshi; Kimura, Yoshikazu; and Tsuchiya, Naoki, 5,700,546, Cl. 428-156.000.
Agfa-Gevaert AG: *See—*
Eichhorn, Mathias; and Elsaesser, Andreas, 5,700,621, Cl. 430-192.000.
Faust, Raimund Josef; and Lutz, Silvia, 5,700,618, Cl. 430-124.000.
Agfa-Gevaert N.V.: *See—*
Bosschaerts, Jacobus; Govaert, René; and Delabastita, Paul, 5,700,610, Cl. 430-30.000.
Horemans, Luc; and Kaerts, Eric, 5,701,150, Cl. 347-212.000.
Agrano AG: *See—*
Ehret, Aloyse, 5,700,684, Cl. 435-255.200.
Ahlstrom Machinery Inc.: *See—*
Prough, J. Robert, 5,700,355, Cl. 162-246.000.
Ahmed, Syed Habib, to Chemadd Limited. Fuel additives and method. 5,700,301, Cl. 44-412.000.
Ahrens, Art: *See—*
Wetters, John; Simmons, John Wayne; Fernandez, Virgilio Alejandro; Ahrens, Art; and Carsello, Steve, 5,701,600, Cl. 455-208.000.
Ahrens, Harald; Tiebel, Rainer; and Zieffle, Rainer, to Polygram International Holdings B.V. Method and device for exactly aligning a printing image relative to a geometrically correct print position of a printing machine. 5,699,742, Cl. 101-486.000.

Aihara, Fumikazu, to Casio Computer Co., Ltd. Broadcast receiving apparatus having selection function of good reception condition in designated program item. 5,701,599, Cl. 455-186.100.
Aisin Seiki Kabushiki Kaisha: *See—*
 Yokoyama, Satoshi; Sakane, Shinsuke; and Kamikado, Masaru, 5,700,069, Cl. 303-115.200.
Ajinomoto Co., Inc.: *See—*
 Taniguchi, Tadatsugu; Muramatsu, Masami; Sugano, Haruo; Matsui, Hiroshi; Kashima, Nobukazu; and Hamuro, Junji, 5,700,913, Cl. 530-351.000.
Akaogi, Takao; and Yoshida, Masanobu, to Fujitsu Limited. Semiconductor device with selectable device information. 5,701,274, Cl. 365-230.010.
Akebi, Yasunobu: *See—*
 Kubo, Masumi; Akebi, Yasunobu; and Yamashita, Toshihiro, 5,701,165, Cl. 349-5.000.
Akebono Brake Industry Co., Ltd.: *See—*
 Ikegami, Hiroshi; Nishikawa, Yutaka; and Ando, Masanori, 5,699,882, Cl. 188-73.380.
Akimoto, Kazuo; and Imano, Seiichi, to Seiko Precision Inc. Camera shutter. 5,701,537, Cl. 396-463.000.
Akimoto, Koji: *See—*
 Kokura, Makoto; Akimoto, Koji; and Urihara, Kazuhiro, 5,700,884, Cl. 525-528.000.
Akiyama, Munehiro: *See—*
 Kumagai, Tatsuya; Kajioka, Hiroshi; Kobayashi, Osamu; Akiyama, Munehiro; Oho, Shigeru; and Sonobe, Hisao, 5,701,177, Cl. 356-350.000.
Akiyama, Satoshi: *See—*
 Hori, Kenjiro; Akiyama, Satoshi; Takubo, Takefumi; and Kishida, Tetsuo, 5,701,182, Cl. 358-296.000.
Akiyama, Yuji; Hirabayashi, Hiromitsu; Nagoshi, Shigeyasu; Arai, Atsushi; Kurata, Tetsuji; Sugimoto, Hitoshi; and Matsubara, Miyuki, to Canon Kabushiki Kaisha. Ink head recovery method and apparatus. 5,701,146, Cl. 347-26.000.
Akutsu, Kotaro; Osanai, Eiji; and Kamata, Shigeto, to Canon Kabushiki Kaisha. Weight supporting apparatus. 5,701,041, Cl. 310-12.000.
Akutsu, Norikatsu: *See—*
 Ikoma, Munehisa; Akutsu, Norikatsu; Enokido, Masashi; Yoshii, Fumihiko; Kaiya, Hideo; and Tsuda, Shingo, 5,700,596, Cl. 429-206.000.
Alabama Metal Industires Corporation: *See—*
 Maylon, Gary Joseph, 5,699,638, Cl. 52-86.000.
Alamzad, Hossein: *See—*
 Stone, Lawrence H.; Zhao, William J.; and Alamzad, Hossein, 5,700,497, Cl. 425-222.000.
Alban, Noelle Carolyn: *See—*
 Deckner, George Endel; Pichardo, Francisco Antonio; Alban, Noelle Carolyn; and Sills, Marsha Carolyn, 5,700,452, Cl. 424-59.000.
Albani Bayeux, Inc.: *See—*
 Nittmann, Peter H., 5,699,681, Cl. 66-213.000.
Albeck, Bernhard, to Vossloh-Schwabe GmbH. Electrical connection element. 5,700,159, Cl. 439-571.000.
Albemarle Corporation: *See—*
 Magin, Ralph W.; Sauer, Joe D.; and Quebedeaux, Deborah A., 5,700,760, Cl. 504-206.000.
Albert Handtmann Maschinenfabrik GmbH & Co. KG: *See—*
 Schliesser, Gerhard; and Burger, Karl, 5,699,723, Cl. 99-443.00C.
Alberti, Klaus; Ritter, Eberhard, deceased (by Rosemarie Ritter-Horn, neé Horn, heiress); Westphal, Frank; and Wehmeier, Guido, to Hoechst Aktiengesellschaft. Retention system and method for preventing the efflux of substances from installations into the surroundings. 5,699,840, Cl. 141-313.000.
Albrecht, Alan R., to Hewlett-Packard Company. Error recovery in a network having cascaded hubs. 5,701,305, Cl. 371-20.100.
Albrecht, James W., to Stromag, Inc. Spring-applied dual coil brake. 5,699,883, Cl. 188-171.000.
Albright, Jay Donald; Venkatesan, Aranapakam M.; Dusza, John P.; and Sum, Fuk-Wah, to American Cyanamid Company. Tricyclic benzazepine vasopressin antagonists. 5,700,796, Cl. 514-220.000.
Alcatel Cit: *See—*
 Vinel, Paul, 5,701,303, Cl. 370-522.000.
Alcatel Mobile Communication France: *See—*
 Dupuy, Pierre, 5,701,584, Cl. 455-33.100.
Alcatel Submarcom: *See—*
 Marlier, Géry; and Fasquel, Didier, 5,700,990, Cl. 219-121.640.
Alcon Laboratories Inc.: *See—*
 Clark, Abbot F., 5,700,794, Cl. 514-177.000.
 Dean, Thomas R.; Hellberg, Mark; and Sallee, Verney L., 5,700,835, Cl. 514-530.000.
Aldrich, James Peter: *See—*
 Csapo, John Steven; Aldrich, James Peter; and Gay, Ben Douglas, 5,701,297, Cl. 370-341.000.
Aldridge, James K., III. Animal feeder. 5,699,753, Cl. 119-52.100.
Alesz, József; Busznyák, Imre; Glódi, István; Kiss, András; Kukta, Józsefné; Nagy, Béla; Salamon, Péter; Szentpétery, Elemér; Tóth, Zoltán; and Ujhelyi, Tamás, to MMG Automatika Muvek Reszvenytarsasag. Method and apparatus for measuring mass flow. 5,700,957, Cl. 73-861.357.
Alexandrovich, Peter S.: *See—*
 Regan, Michael T.; and Alexandrovich, Peter S., 5,700,611, Cl. 430-45.000.
Alexeevna, Volkova Margarita: *See—*
 Yamamoto, Yuichi; Tatsu, Haruyoshi; Alexeevna, Volkova Margarita; Vasilyevich, Sokolov Sergey; and Vladimirovich, Veretennikov Nikolai, 5,700,879, Cl. 525-353.000.
Alferness, Merwin H.; Criswell, Peter Bradley; Johnson, David Randal; and McBreen, James R., to Unisys Corporation. Method for generating an internet protocol suite checksum in a single macro instruction. 5,701,316, Cl. 371-53.000.
Allelix Biopharmaceuticals, Inc.: *See—*
 Fu, Jian-Min; and Rakhit, Sumanas, 5,700,445, Cl. 424-1.810.
Allen-Bradley Company, Inc.: *See—*
 Goldberg, Ira B.; Mays, David L.; and Moormann, Laurel A., 5,701,083, Cl. 324-642.000.
 Wieloch, Christopher J., 5,699,609, Cl. 29-830.000.
Allen, Spencer W.; and Apostolides, John K., to RPM Industries, Inc. Bypass timer circuit. 5,699,764, Cl. 123-196.500.
Alliance Semiconductor Corporation: *See—*
 Shrivastava, Ritu; and Reddy, Chitranjan N., 5,701,264, Cl. 365-149.000.
AlliedSignal Inc.: *See—*
 Berwanger, Fred William; and Reynolds, Daniel S., 5,699,881, Cl. 188-71.500.
Allison, Stephen W.: *See—*
 Muhs, Jeffrey D.; and Allison, Stephen W., 5,701,370, Cl. 385-13.000.
Alloin, Fannie: *See—*
 Sanchez, Jean-Yves; Alloin, Fannie; and Masson, Jacqueline, 5,700,880, Cl. 525-403.000.
Allred, Robert T., to Dynamic Feeds, Inc. Feed control system. 5,699,688, Cl. 72-20.500.
Almond, David S.: *See—*
 Puritch, George S.; Almond, David S.; and Parker, Diana L., 5,700,473, Cl. 424-405.000.
Alon, Amir; Heiman, Arie; and Katz, Itzhak, to Zen Research N.V. Method and apparatus for high speed optical storage device. 5,701,283, Cl. 369-44.410.
Alps Electric Co., Ltd.: *See—*
 Sugifune, Shin; Kanno, Tsutomu; and Nabeya, Hajime, 5,701,001, Cl. 235-472.000.
 Uchio, Masatoshi; and Yasuda, Yuichi, 5,701,187, Cl. 359-143.000.
Alternative Safety Technologies: *See—*
 Welk, James E., 5,699,986, Cl. 246-125.000.
Altmann, Karl-Heinz; Imwinkelried, René; and Eschenmoser, Albert, to Novartis Corporation. Carbocyclic nucleosides containing bicyclic rings, oligonucleotides therefrom, process for their preparation, their use and intermediates. 5,700,920, Cl. 536-221.000.
Alvarado-Urbina, Gabriel: *See—*
 Crea, Roberto; Pang, Roy Hoi Loi; Oppermann, Hermann; Keck, Peter C.; Alvarado-Urbina, Gabriel; Wu, Gay-May; and Cohen, Charles M., 5,700,677, Cl. 435-226.000.
Alyn Corporation: *See—*
 Carden, Robin A., 5,700,962, Cl. 75-236.000.
Amado, Carlos Armando. Method and apparatus for applying if-then-else rules to data sets in a relational data base and generating from the results of application of said rules a database of diagnostics linked to said data sets to aid executive analysis of financial data. 5,701,400, Cl. 395-76.000.
Amamiya, Syoji; Maruyama, Akio; and Hashimoto, Yuichi, to Canon Kabushiki Kaisha. Electrophotographic apparatus, process cartridge, and image forming method featuring a photosensitive member having a conductive surface layer and a cleaning means having conductive properties. 5,701,571, Cl. 399-343.000.
Amano, Kenichiro, to Canon Kabushiki Kaisha. Camera. 5,701,539, Cl. 396-515.000.
Ambrose, John: *See—*
 Ettel, Victor Alexander; Ambrose, John; Cushnie, Kirt Kenneth; Bell, James Alexander E.; Paserin, Vladimir; and Kalal, Peter Joseph, 5,700,363, Cl. 205-271.000.
Ameis, Dieter: *See—*
 Schleimer, Friedrich; and Ameis, Dieter, 5,700,144, Cl. 432-161.000.
Amelio, Armand F., to Sikorsky Aircraft Corporation. Infrared suppressor for a gas turbine engine. 5,699,965, Cl. 239-127.300.
Amemiya, Izumi: *See—*
 Hara, Tomoyuki; Tobita, Kenichi; Niimi, Tsutomu; Amemiya, Izumi; and Takasaki, Toshiharu, 5,699,871, Cl. 180-247.000.
American Cyanamid Company: *See—*
 Albright, Jay Donald; Venkatesan, Aranapakam M.; Dusza, John P.; and Sum, Fuk-Wah, 5,700,796, Cl. 514-220.000.
 Feigelson, Gregg Brian; Curran, William V.; and Ziegler, Carl Bernard, 5,700,930, Cl. 540-200.000.
 Mak, Paul; and Karathanasis, Sotirios K., 5,700,650, Cl. 435-7.100.
 Mak, Paul; and Karathanasis, Sotirios K., 5,700,682, Cl. 435-252.300.
 Tao, Weng; Corbett, Martin John; and Pickett, Walter C., 5,700,465, Cl. 424-130.100.
American Standard, Inc.: *See—*
 Thul, Alfons, 5,699,587, Cl. 16-114.00R.
Amin, Nurul; Bortins, John; and Yan, Ying, to Seagate Technology, Inc. Method for forming a magnetic thin film head with recessed basecoat. 5,699,605, Cl. 29-603.140.
Amirana, Omar: *See—*
 Littmann, Laszlo; Lau, Liming; and Amirana, Omar, 5,699,796, Cl. 128-642.000.
Amkor Electronics, Inc.: *See—*
 Marrs, Robert C., 5,701,034, Cl. 257-706.000.

Amresco Inc.: *See—*
 Highman, Timothy J.; Smerdel, Michael E.; and Behm, Stephen M., 5,700,365, Cl. 204-469.000.
Analytical Control Systems, Inc.: *See—*
 Speck, Roy E., 5,700,634, Cl. 435-4.000.
Andersen, Jorgen W., to Sawtek Inc. Time domain delay measurement apparatus and associated method. 5,700,952, Cl. 73-19.030.
Anderson, Charles C.; Steinwachs, Lawrence J.; and Schum, Gary W., to Eastman Kodak Company. Thermally stable photographic bar code label containing an antistatic layer. 5,700,623, Cl. 430-256.000.
Anderson, Gary D.: *See—*
 Isakson, Peter C.; Anderson, Gary D.; and Gregory, Susan A., 5,700,816, Cl. 514-326.000.
Anderson, James J., to Anderson, James J. Chucking ring. 5,700,019, Cl. 279-154.000.
Anderson, Mark Stephen; Yesberg, John Desborough; Pope, Michael; Nayda, Lisa; Hayman, Ken; and Beahan, Brendan, to Commonwealth of Australia of Anzac Park, The. Complex document security. 5,701,342, Cl. 380-4.000.
Anderson, Richard Walter: *See—*
 Yang, Jialin; Leydorf, George Fredric, Jr.; and Anderson, Richard Walter, 5,699,760, Cl. 123-41.740.
Andersson, Håkan Clas: *See—*
 Diachina, John Walter; and Andersson, Håkan Clas, 5,701,298, Cl. 370-346.000.
Andersson, Sven: *See—*
 Golman, Klaes; Andersson, Sven; Rise, Frode; Wistrand, Lars-Goran; and Wikstrom, Hakan, 5,700,448, Cl. 424-9.330.
Ando, Masanori: *See—*
 Ikegami, Hiroshi; Nishikawa, Yutaka; and Ando, Masanori, 5,699,882, Cl. 188-73.380.
Andoh, Masaki: *See—*
 Hineno, Satoshi; and Andoh, Masaki, 5,701,287, Cl. 369-110.000.
Andre, Michel; and Detable, Pascal, to Etablissements Caillau. Radially engageable leakproof coupling. 5,700,041, Cl. 285-325.000.
Andreas, Philip B.: *See—*
 Gelbien, Lawrence J.; Andreas, Philip B.; and Schweiger, Werner J., 5,701,226, Cl. 361-63.000.
Andreas Stihl: *See—*
 Förderer, Karl; Höppner, Klaus; and Fricke, Gerd, 5,699,865, Cl. 173-162.200.
Andritz-Pantentverwaltungs-Gesellschaft m.b.H.: *See—*
 Pylkkanen, Matti; and Thornquist, Lennart, 5,699,919, Cl. 209-518.000.
Andrzejewski, Heinz: *See—*
 Backes, Heinz-Peter; and Andrzejewski, Heinz, 5,699,603, Cl. 29-450.000.
Angelopoulos, Marie; Brusic, Vlasta A.; Graham, Teresita Ordonez; Purushothaman, Sampath; Saraf, Ravi F.; Shaw, Jane Margaret; Roldan, Judith Marie; and Viehbeck, Alfred, to International Business Machines Corporation. Composition containing a polymer and conductive filler and use thereof. 5,700,398, Cl. 252-500.000.
Anglia Autoflow Limited: *See—*
 Wills, David; and Bateman, Geoffrey Francis, 5,699,755, Cl. 119-846.000.
Anjoh, Ichiro: *See—*
 Oguchi, Satoshi; Ishihara, Masamichi; Ito, Kazuya; Murakami, Gen; Anjoh, Ichiro; Sakuta, Toshiyuki; Yamaguchi, Yasunori; Kasama, Yasuhiro; Udagawa, Tetsu; Miyamoto, Eiji; Matsuno, Youichi; Satoh, Hiroshi; and Nozoe, Atrusi, 5,701,031, Cl. 257-686.000.
Antberg, Martin: *See—*
 Dolle, Volker; Rohrmann, Jürgen; Winter, Andreas; and Antberg, Martin, 5,700,896, Cl. 526-351.000.
Anthamatten, Olivier: *See—*
 Vogel, Paul; Anthamatten, Olivier; and Bättig, Rainer, 5,701,193, Cl. 359-290.000.
Anthony, William S.; and Byler, Richard K., to United States of America, Agriculture. System and method for measuring stickiness of materials such as cotton. 5,700,961, Cl. 73-866.000.
Anton, Klaus: *See—*
 Frederiksen, Lene; Anton, Klaus; and van Hoogevest, Peter, 5,700,482, Cl. 424-450.000.
Anzai, Masayasu: *See—*
 Tsujita, Akio; Anzai, Masayasu; and Kawanishi, Tsuneaki, 5,701,560, Cl. 399-159.000.
Aoni, Toshiaki: *See—*
 Sakaguchi, Shinji; Aoni, Toshiaki; and Sato, Kenichiro, 5,700,620, Cl. 430-191.000.
Aoe, Seiichiro: *See—*
 Murakami, Mototake; Aoe, Seiichiro; and Tatsumi, Kiyoshi, 5,700,509, Cl. 426-495.000.
Aoki, Sei: *See—*
 Takeichi, Hideo; Ozawa, Yoichi; Aoki, Sei; and Shimizu, Takashi, 5,700,874, Cl. 525-288.000.
Aoki, Shunji; Ohba, Toshio; Hara, Yasuaki; and Itoh, Kunio, to Shin-Etsu Chemical Co., Ltd. Curable silicone compositions. 5,700,899, Cl. 528-37.000.
Aoki, Yukio: *See—*
 Kurimoto, Ikuo; Kawajiri, Tatsuya; Onodera, Hideo; Tanimoto, Michio; and Aoki, Yukio, 5,700,752, Cl. 502-311.000.
Aotsuka, Tomoji; Abe, Naoki; and Ashizawa, Naoki, to Grelan Pharmaceutical Co., Ltd. 2-substituted benzothiazole derivatives and prophylactic and therapeutic agents for the treatment of diabetic complications. 5,700,819, Cl. 514-367.000.
Apostolides, John K.: *See—*
 Allen, Spencer W.; and Apostolides, John K., 5,699,764, Cl. 123-196.500.
Apple Computer, Inc.: *See—*
 Gradeler, Eric J., 5,701,515, Cl. 395-834.000.
 Kelley, Michael W.; and Winner, Stephanie L., 5,701,405, Cl. 395-141.000.
 Othmer, Konstantin; and Holland, Shannon, 5,701,138, Cl. 345-132.000.
 Tang, John G.; Gallatin, David M.; and Baik, David J., 5,701,232, Cl. 361-683.000.
Applewhite, John T.: *See—*
 Johnson, Lonnie G.; and Applewhite, John T., 5,699,781, Cl. 124-69.000.
Applied Design Technology, Ltd.: *See—*
 Figura, William L., 5,699,863, Cl. 172-145.000.
Applied Materials, Inc.: *See—*
 Beinglass, Israel; and Carlson, David K., 5,700,520, Cl. 427-255.100.
Apseloff, Glen: *See—*
 Gerber, Nicholas; Apseloff, Glen; and Mullet, Daniel L., 5,700,487, Cl. 424-650.000.
Arahira, Fumihiro: *See—*
 Honda, Takao; Yanagida, Makoto; Arahira, Fumihiro; and Yamamoto, Takeo, 5,701,551, Cl. 399-50.000.
Arai, Atsushi: *See—*
 Akiyama, Yuji; Hirabayashi, Hiromitsu; Nagoshi, Shigeyasu; Arai, Atsushi; Kurata, Tetsuji; Sugimoto, Hitoshi; and Matsubara, Miyuki, 5,701,146, Cl. 347-26.000.
Arai, Tomohisa, to NEC Corporation. Semiconductor integrated circuit which can be tested by an LSI tester having a reduced number of pins. 5,701,306, Cl. 371-22.100.
Arai, Yasuyuki: *See—*
 Yamazaki, Shunpei; and Arai, Yasuyuki, 5,700,333, Cl. 136-258.000.
Araki, Ryuji; Kubota, Atsushi; Sasaki, Shinichi; and Miura, Koji, to Canon Kabushiki Kaisha. Developing sleeve having a cylindrical portion and a non-cylindrical portion provided by the same member, and developing device using the sleeve. 5,701,562, Cl. 399-265.000.
Arakoma, Yukihisa: *See—*
 Matsumoto, Shinichi; Kuroyanagi, Masatoshi; Toyao, Tetsuya; Murakami, Masashi; and Arakoma, Yukihisa, 5,699,770, Cl. 123-470.000.
Aranyi, Ernie: *See—*
 Peyser, Mark S.; Cuny, Douglas J.; Strauss, Douglas W.; Reed, Scott W.; Rethy, Csaba L.; and Aranyi, Ernie, 5,700,270, Cl. 606-142.000.
 Whitfield, Kenneth H.; and Aranyi, Ernie, 5,700,271, Cl. 606-143.000.
Arata, Masami: *See—*
 Zeng, Weiping; Yamamoto, Takashi; Arata, Masami; and Banba, Tsuyoshi, 5,700,875, Cl. 525-301.000.
Aratani, Shuntaro; Ohshima, Masamichi; and Suga, Kazumi, to Canon Kabushiki Kaisha. Display control method and apparatus. 5,701,135, Cl. 345-89.000.
Arbouzov, Leonid M., to Sun Microsystems, Inc. Method and apparatus for displaying locations of errors detected inside software macro calls. 5,701,487, Cl. 395-704.000.
Arco Chemical Technology, L.P.: *See—*
 Thompson, Andrew M., 5,700,847, Cl. 521-159.000.
Ariazi, Eric A.: *See—*
 Gould, Michael N.; and Ariazi, Eric A., 5,700,644, Cl. 435-6.000.
Arimoto, Keigo, to Noritsu Koki Co., Ltd. Cartridge case stocker apparatus in automatic film development processor machine. 5,701,543, Cl. 396-620.000.
Arisawa, Takashi: *See—*
 Sugiyama, Akira; Nakayama, Tsuyoshi; Kato, Masaaki; Maruyama, Yoichiro; and Arisawa, Takashi, 5,701,320, Cl. 372-32.000.
Aristocrat Leisure Industries: *See—*
 Halic, Vladimir, 5,700,195, Cl. 463-29.000.
Arita, Masaaki: *See—*
 Itou, Toshifumi; Shimazaki, Hiromitsu; Arita, Masaaki; and Horinouchi, Shougo, 5,701,129, Cl. 343-873.000.
Arita, Setsuo; Ito, Tetsuo; Ohga, Yukiharu; Ujita, Hiroshi; Murata, Fumio; Miyake, Masao; and Nishizawa, Yasuo, to Hitachi, Ltd. Information processing apparatus having a neural network and an expert system. 5,701,394, Cl. 395-11.000.
Arjunan, Palanisamy; and White, Donald Andrew, to Exxon Chemical Patents Inc. Compatibilized elastomer blends containing grafted polymers of an isoolefin and alkylstyrene. 5,700,871, Cl. 525-74.000.
Arkwright, Incorporated: *See—*
 Sargeant, Steven J.; Behan, Niall D.; Atherton, Dave; Yang, Sen; Huang, Miaoling; and Sun, Kang, 5,700,582, Cl. 420-476.600.
Arleth, Werner: *See—*
 Goedowski, Gerhard; Arleth, Werner; and Ulmer, Peter, 5,699,891, Cl. 198-370.100.
Armstrong, Alan J.; and Zook, Christopher P., to Cirrus Logic, Inc. On-the-fly error correction using thermal asperity erasure pointers from a sampled amplitude read channel in a magnetic disk drive. 5,701,314, Cl. 371-40.300.
Armstrong, Neil Dean: *See—*

Hashish, Mohamed Ahmed; Crowe, David Arthur; and Armstrong, Neil Dean, 5,700,181, Cl. 451-40.000.
Arndt, Kim E.: *See—*
Van Heertum, John C.; Kleschick, William A.; Arndt, Kim E.; Costales, Mark J.; Ehr, Robert J.; Bradley, Kimberly Brubaker; Reifschneider, Walter; Benkö , Zoltan; Ash, Mary Lynne; and Jachetta, John J., 5,700,940, Cl. 546-119.000.
Arndt, Richard Louis; Nicholson, James Otto; Silha, Edward John; Thurber, Steven Mark; and Youngs, Amy May, to International Business Machines Corporation. Scalable system interrupt structure for a multi-processing system. 5,701,495, Cl. 395-736.000.
Arnold, Stephen M.: *See—*
Czank, Stephen C.; Desmarais, Robert J.; and Arnold, Stephen M., 5,699,594, Cl. 24-632.000.
Arnone, Donald D.: *See—*
Burroughes, Jeremy H.; and Arnone, Donald D., 5,701,016, Cl. 257-24.000.
Arnot, David E.; Enea, Vincenzo; Nussenzweig, Ruth S.; and Nussenzweig, Victor, to New York University. Immunogenic peptide antigen corresponding to *plasmodium vivax* circumsporozoite protein. 5,700,906, Cl. 530-324.000.
Artis, Derrick L. Contact lens case with automatic counter. 5,699,900, Cl. 206-5.100.
Artsy, Yeshayahu, to Digital Equipment Corporation. Routing objects on action paths in a distributed computing system. 5,701,484, Cl. 395-683.000.
Arturo Salice S.p.A.: *See—*
Salice, Luciano, 5,700,105, Cl. 403-408.100.
Arzeno, Humberto B., to Syntex (U.S.A.) Inc. Process for preparing a 2-(2-amino-1,6-dihydro-6-oxo-purin-9-yl) methoxy-1,3-propanediol valinate. 5,700,936, Cl. 544-276.000.
Asahi Denka Kogyo Kabushiki Kaisha: *See—*
Kokura, Makoto; Akimoto, Koji; and Urihara, Kazuhiro, 5,700,884, Cl. 525-528.000.
Asahi Kogaku Kogyo Kabushiki Kaisha: *See—*
Hasushita, Sachio; Yoneyama, Shuji; Maruyama, Koichi; and Ito, Takayuki, 5,701,205, Cl. 359-691.000.
Sasaki, Takamitsu; and Nomura, Hiroshi, 5,701,206, Cl. 359-704.000.
Sato, Norio; and Tanaka, Hitoshi, 5,701,208, Cl. 359-822.000.
Taguchi, Ichiro; and Inazuka, Masahiro, 5,701,534, Cl. 396-373.000.
Yamamoto, Hiroshi; Takishima, Suguru; and Shinozaki, Shimpei, 5,701,216, Cl. 360-99.020.
Asahi, Masahiko: *See—*
Okada, Jouji; Kawamata, Akira; Tokunaga, Tadayuki; Nagatani, Noboru; Torizuka, Makoto; and Asahi, Masahiko, 5,700,898, Cl. 528-25.000.
Asai, Kohtaro: *See—*
Ohira, Hideo; Murakami, Tokumichi; Asai, Kohtaro; and Shimada, Toshiaki, 5,701,158, Cl. 348-410.000.
Ohira, Hideo; Murakami, Tokumichi; Asai, Kohtaro; and Shimada, Toshiaki, 5,701,159, Cl. 348-410.000.
Asami, Osamu: *See—*
Yamada, Yukio; Asami, Osamu; Sugiyama, Hidehiko; Idekoba, Chie; Hoshino, Fumihiko; Hirai, Masana; Kajino, Tsutomu; Imaeda, Takao; and Sarai, Kiyoko, 5,700,659, Cl. 435-69.100.
Asao, Kosuke: *See—*
Miyakawa, Futoshi; Kawamata, Masahiro; Hamada, Yoshiaki; Asao, Kosuke; and Kajikawa, Tsuneo, 5,699,872, Cl. 180-291.000.
Ascom Tech AG: *See—*
Vogel, Paul; Anthamatten, Olivier; and Bättig, Rainer, 5,701,193, Cl. 359-290.000.
Asea Brown Boveri AB: *See—*
Björklund, Per-Erik; Jonsson, Tomas; and Juhlin, Lars-Erik, 5,701,239, Cl. 363-35.000.
Döfnäs, Lars; and Hyttinen, Mats, 5,701,241, Cl. 363-35.000.
Asea Brown Boveri AG: *See—*
Joos, Franz, 5,699,667, Cl. 60-737.000.
Ash, Mary Lynne: *See—*
Van Heertum, John C.; Kleschick, William A.; Arndt, Kim E.; Costales, Mark J.; Ehr, Robert J.; Bradley, Kimberly Brubaker; Reifschneider, Walter; Benkö , Zoltan; Ash, Mary Lynne; and Jachetta, John J., 5,700,940, Cl. 546-119.000.
Ashida, Eiji: *See—*
Taniyama, Akira; Morijiri, Makoto; Tanaka, Haruko; Yuito, Isamu; Ashida, Eiji; Koyanagi, Hiroaki; Tanabe, Hideo; and Kobayashi, Tetsuo, 5,701,221, Cl. 360-113.000.
Ashizawa, Naoki: *See—*
Aotsuka, Tomoji; Abe, Naoki; and Ashizawa, Naoki, 5,700,819, Cl. 514-367.000.
Ashman, James: *See—*
Johnson, David; and Ashman, James, 5,700,340, Cl. 156-152.000.
Aspec Technology, Inc.: *See—*
Yin, Patrick, 5,701,021, Cl. 257-208.000.
Assa, Shlomo: *See—*
Minich, Arthur P.; Kappel, David W.; Hargis, David E.; and Assa, Shlomo, 5,700,076, Cl. 353-31.000.
AT&T Global Information Solutions Company: *See—*
Gearhardt, Kevin J.; and Pruehsner, Darrell L., 5,701,309, Cl. 371-25.100.
Atalar, Ergin; Bottomley, Paul A.; and Zerhouni, Elias A., to Johns Hopkins University, The. Method of internal magnetic resonance imaging and spectroscopic analysis and associated apparatus. 5,699,801, Cl. 128-653.200.
Atherton, Dave: *See—*
Sargeant, Steven J.; Behan, Niall D.; Atherton, Dave; Yang, Sen; Huang, Miaoling; and Sun, Kang, 5,700,582, Cl. 420-476.600.
Atkinson, Noel D. Scanning receiver with direct digital frequency synthesis and digital signal processing. 5,701,598, Cl. 455-161.200.
Atkinson, Robert G., to Microsoft Corporation. Palladian menus and methods relating thereto. 5,701,424, Cl. 395-353.000.
Atlas Snow-Shoe Company: *See—*
Klebahn, Perry A.; and Klingbeil, James D., 5,699,630, Cl. 36-124.000.
Attaway, Brett W.; Lofgren, John D.; and Kelley, H. Ray, to Lockheed Martin Corporation. Fast bist architecture with flexible standard interface. 5,701,308, Cl. 371-22.300.
Atwood, Gregory E.: *See—*
Fazio, Albert; Atwood, Gregory E.; Mi, James O.; and Ruby, Paul, 5,701,266, Cl. 365-185.030.
Aucsmith, David W., to Intel Corporation. Parameterized bloom filters. 5,701,464, Cl. 395-610.000.
Audi, Richard Francois; Smith, Donald Scott; Carroll, Phillip Patrick, III; and Rossi, Michael Anthony, to Oakwood Group, The. Energy absorbing structure. 5,700,545, Cl. 428-131.000.
Auspex Systems, Inc.: *See—*
Cheng, Yu-Ping; and Hitz, David, 5,701,516, Cl. 395-842.000.
Austel, Volkhard: *See—*
Pieper, Helmut; Austel, Volkhard; Himmelsbach, Frank; Linz, Günter; Guth, Brian; and Weisenberger, Johannes, 5,700,801, Cl. 514-252.000.
Austin, Barry G., to Tekonsha Engineering Company. Positioning apparatus for inertial sensors. 5,700,068, Cl. 303-24.100.
Austin, John C.: *See—*
Webster, Marc W.; Saraswat, Vijay A.; Fromherz, Markus P. J.; Austin, John C.; Rulli, Paul A.; and McCue, Daniel Lawrence, III, 5,701,557, Cl. 399-77.000.
Automated Solutions, LLC: *See—*
Campbell, Robert L., Jr., 5,699,707, Cl. 83-100.000.
Automotive Systems Laboratory, Inc.: *See—*
Siddiqui, Shahid A., 5,700,973, Cl. 102-530.000.
Autozone, Inc.: *See—*
Perkins, Clifton G., 5,701,089, Cl. 324-772.000.
Auxier, Thomas A.: *See—*
Hall, Kenneth B.; McClelland, Robert J.; and Auxier, Thomas A., 5,700,131, Cl. 416-97.00R.
Avalon, Gary A.: *See—*
Logue, Daniel R.; Van Emmerik, Piet T.; Mann, Roger H.; Sun, Edward I.; Avalon, Gary A.; Caldwell, Carol A.; Chang, Eng-Pi; and Huskey, Richard A., 5,700,571, Cl. 428-352.000.
Avery Dennison Corporation: *See—*
Freedman, Melvin S., 5,700,564, Cl. 428-332.000.
Lee, Ivan, 5,700,585, Cl. 428-500.000.
Logue, Daniel R.; Van Emmerik, Piet T.; Mann, Roger H.; Sun, Edward I.; Avalon, Gary A.; Caldwell, Carol A.; Chang, Eng-Pi; and Huskey, Richard A., 5,700,571, Cl. 428-352.000.
Avibank Mfg., Inc.: *See—*
Duran, John A., 5,699,944, Cl. 224-326.000.
Ayada, Michihiko: *See—*
Taguchi, Kohei; Ayada, Michihiko; and Shingu, Hideo, 5,701,575, Cl. 419-28.000.
Ayres, George Edward: *See—*
Bowen, Larry; Ayres, George Edward; Black, Gary; and Daoust, Jacques, 5,699,812, Cl. 131-374.000.
Azechi, Syuuichi: *See—*
Yoshida, Takeo; Azechi, Syuuichi; and Shiobara, Toshio, 5,700,853, Cl. 523-212.000.
Azuma, Tadahiro, to Mitsubishi Denki Kabushiki Kaisha. Failure diagnosis device of fuel evaporation preventive apparatus. 5,699,775, Cl. 123-520.000.
Azuma, Toshikazu: *See—*
Isobe, Kazuo; Azuma, Toshikazu; Nishikawa, Hideyo; and Imamura, Takashi, 5,700,772, Cl. 510-421.000.
Azzazy, Medhat T., to Gas Research Institute. Optical flowmeter. 5,701,172, Cl. 356-28.000.
Baba, Fumihiko: *See—*
Sagiyama, Tatsuya; Baba, Fumihiko; Saito, Kaname; Matsushima, Takashi; and Iizuka, Hitoshi, 5,700,951, Cl. 73-11.080.
Baba, Hiroshi: *See—*
Matsumoto, Toshio; Baba, Hiroshi; Itoh, Kazuhiko; and Ogura, Shiro, 5,701,406, Cl. 395-182.040.
Matsumoto, Toshio; Baba, Hiroshi; Itoh, Kazuhiko; and Ogura, Shiro, 5,701,407, Cl. 395-182.050.
Babacz, Robert J.; Narendrnath, Kadthala R.; Frake, Kevin; and Baylog, Melissa A., to Polar Materials, Incorporated. Method for cleaning hollow articles with plasma. 5,700,327, Cl. 134-1.100.
Bachmann, Bernd: *See—*
Winter, Andreas; Spaleck, Walter; and Bachmann, Bernd, 5,700,886, Cl. 526-119.000.
Backes, Heinz-Peter; and Andrzejewski, Heinz, to Draftex Industries, Limited. Sealing or guiding assemblies and methods of making them. 5,699,603, Cl. 29-450.000.

Backhauss, Lothar: *See—*
Klatt, Bruno; Horx, Manfred; Koelling, Hartmut; Berndt, Karlheinz; Krueger, Gerhard; Kuenne, Hans-Joachim; Moerl, Lothar; and Backhauss, Lothar, 5,700,572, Cl. 428-357.000.
Bacon, Charles R. Self-adjusting mold backplate. 5,700,496, Cl. 425-193.000.
Badesha, Santokh S.; Heeks, George J.; Henry, Arnold W.; and Chow, Che Chung, to Xerox Corporation. Fluoroelastomer members. 5,700,568, Cl. 428-334.000.
Baer, Jose T.; Davis, Bill C.; and Blanyer, Richard J., to Electrosource, Inc. Battery management system. 5,701,068, Cl. 320-15.000.
Bagnoli, Carlo: *See—*
Zulian, Ferruccio; Ramolini, Angelo; Bagnoli, Carlo; and Lazzari, Angelo, 5,701,413, Cl. 395-200.020.
Bahr, Mel J.; and Bahr, Timothy A., to MGS Machine Corporation. Apparatus for handling articles. 5,700,004, Cl. 271-171.000.
Bahr, Timothy A.: *See—*
Bahr, Mel J.; and Bahr, Timothy A., 5,700,004, Cl. 271-171.000.
Bahramian, Hamid T.: *See—*
Buhler, Steven A.; and Bahramian, Hamid T., 5,701,060, Cl. 315-227.000.
Baik, Bu Hyun; Lee, Young Woo; and Lee, Yong Bok, to Daewon Pharm. Co., Ltd. Antianemic agent containing iron and difructose. 5,700,832, Cl. 514-502.000.
Baik, David J.: *See—*
Tang, John G.; Gallatin, David M.; and Baik, David J., 5,701,232, Cl. 361-683.000.
Baik, Young-Joon: *See—*
Lee, Wook-Seong; Baik, Young-Joon; and Eun, Kwang Yong, 5,700,518, Cl. 427-249.000.
Bailey Marketing Group, Inc.: *See—*
Lane, William F.; and Williams, Robert C., 5,699,927, Cl. 220-254.000.
Bainachi, Daniel Olivier; Dusserre-Telmon, Guy Franck Paul; and Plona, Daniel Georges, to Societe Nationale d'Etude et de Construction de Moteurs d'Aviation "Snecma". Sealing unit with axial brushes controlled by static pressure in axial movement. 5,700,011, Cl. 277-65.000.
Bains, Kuljit S., to Intel Corporation. Logical relocation of memory based on memory device type. 5,701,438, Cl. 395-497.010.
Bajor, Tamas: *See—*
Hirth, Klaus Peter; Schwartz, Donna Pruess; Mann, Elaina; Shawver, Laura Kay; Keri, Gyorgi; Szekely, Istvan; Bajor, Tamas; Haimichael, Janis; Orfi, Laszlo; Levitzki, Alex; Gazit, Aviv; Ullrich, Axel; Lammers, Reiner; Kabbinavar, Fairooz F.; Slamon, Dennis; and Tang, Peng Cho, 5,700,822, Cl. 514-380.000.
Hirth, Klaus Peter; Schwartz, Donna Pruess; Mann, Elaina; Shawver, Laura Kay; Kéri, György; Székely, István; Bajor, Tamás; Haimichael, Janis; Orfi, László; Levitzki, Alex; Gazit, Aviv; Ullrich, Axel; and Lammers, Reiner, 5,700,823, Cl. 514-380.000.
Baker, Clifford E., to Tektronix, Inc. Direct current measuring apparatus and method employing flux diversion. 5,701,073, Cl. 324-117.00H.
Baker, Ernest Dysart; Dinwiddie, John Monroe, Jr.; Grice, Lonnie Edward; Joyce, James Maurice; Loffredo, John Mario; and Sanderson, Kenneth Russell, to International Business Machines Corporation. Isolating a central processing unit from the operating system controlling said unit and its associated hardware for interaction of the unit with data handling apparatus alien to the operating system. 5,701,502, Cl. 395-800.000.
Baker Hughes Incorporated: *See—*
Plummer, Leonard M.; Leyva, Bartolo L.; and Rentzel, Richard T., 5,700,161, Cl. 439-587.000.
Roof, Glenn L., 5,700,368, Cl. 208-48.0AA.
Baker, Jeffrey Clayton; Moser, Brian A.; and Shrader, Warren E., to Eli Lilly and Company. Preparation of an acylated protein powder. 5,700,904, Cl. 530-305.000.
Baker, Raymond: *See—*
Leeson, Paul David; Smith, Adrian Leonard; Ridgill, Mark Peter; Baker, Raymond; Curtis, Neil Roy; and Kulagowski, Janusz Jozef, 5,700,809, Cl. 514-300.000.
Balagurumurthy, Ravichandran; and Kinsey, Jon W., to Lear Corporation. Retention for vehicle seat and method of assembly. 5,700,058, Cl. 297-440.150.
Balan, Isadore: *See—*
Steinhardt, Michael D.; Balan, Isadore; and Sieth, Kenneth J., 5,701,388, Cl. 392-471.000.
Balbi, Gaetano. Tool to stopper and abrade concave and convex surfaces. 5,700,187, Cl. 451-495.000.
Baldasaro, Paul F.: *See—*
Brown, Edward J.; Baldasaro, Paul F.; and Dziendziel, Randolph J., 5,700,332, Cl. 136-253.000.
Baldwin, David Robert, to 3dLabs Inc. Ltd. Three-dimensional graphics subsystem with enhanced support for graphical user interface. 5,701,444, Cl. 395-506.000.
Bales, Bruce Merrill; and Thieler, Stephen Max, to Lucent Technologies Inc. Variable communication bandwidth for providing automatic call back and call hold. 5,701,295, Cl. 370-271.000.
Balling, Edward Norman; Smart, David Clinton; Dussinger, Thomas Edgar; and Zander, Dennis Roland, to Eastman Kodak Company. Camera with film metering responsive shutter release. 5,701,536, Cl. 396-396.000.
Balsells Ventura, Angel. Machine for spreading fabric. 5,699,980, Cl. 242-564.500.
Ban, Soo Ho: *See—*
Woo, Soon Hyung; Chung, Sung Kee; Ban, Soo Ho; Kim, Byoung Bog; and Kim, Si Hwan, 5,700,817, Cl. 514-340.000.
Ban, Takahisa: *See—*
Hoshino, Tatsuyuki; Ban, Takashi; Ban, Takahisa; and Hirose, Tatsuya, 5,699,673, Cl. 62-93.000.
Ban, Takashi: *See—*
Hoshino, Tatsuyuki; Ban, Takashi; Ban, Takahisa; and Hirose, Tatsuya, 5,699,673, Cl. 62-93.000.
Banba, Tsuyoshi: *See—*
Zeng, Weiping; Yamamoto, Takashi; Arata, Masami; and Banba, Tsuyoshi, 5,700,875, Cl. 525-301.000.
Bando, Takeshi: *See—*
Ishikawa, Hiroki; Kenmochi, Yasuhiko; Bando, Takeshi; Hayashi, Masaho; and Shinogi, Norikazu, 5,699,912, Cl. 206-494.000.
Banemann, Reiner; Tenfelde, Bernd; and Wibbeling, Reinhard, to KTR Kupplungstechnik GmbH. Overload clutch. 5,700,196, Cl. 464-36.000.
Banes, Cheryl Ann; and Born, Joseph, to Cherylann Company. Fingernail protector. 5,699,816, Cl. 132-285.000.
Baney, Douglas M., to Hewlett-Packard Company. Optical receiver calibration based on a relative intensity noise standard. 5,700,949, Cl. 73-1.00R.
Bankert, Peter J.; Perry, Mark; and Grady, Richard, to Graco Inc. Turbulent flow conduit cleaning apparatus. 5,699,817, Cl. 134-102.200.
Banks, Gerald: *See—*
Concannon, Ted; Vala, John; and Banks, Gerald, 5,701,361, Cl. 382-138.000.
Banning, Jeffery H.; and Bui, Loc V., to Tektronix, Inc. Ink-jet ink composition containing a colored polyurethane dispersion. 5,700,851, Cl. 523-161.000.
Baptist, Robert: *See—*
Ida, Michel; and Baptist, Robert, 5,700,627, Cl. 430-311.000.
Bär, Harald: *See—*
Jung, Rudiger; and Bär, Harald, 5,699,714, Cl. 91-439.000.
Barbachyn, Michael R.: *See—*
Hutchinson, Douglas K.; Barbachyn, Michael R.; Brickner, Steven J.; Gammill, Ronald B.; and Patel, Mahesh V., 5,700,799, Cl. 514-235.800.
Barbee, Chris: *See—*
Bestgen, Michael J.; Kramer, Richard B.; Moulden, Daniel P.; Barbee, Chris; and Hibbetts, Bryon, 5,699,894, Cl. 198-678.100.
Barber, Ivor G., to LSI Logic Corporation. Method of packaging an integrated circuit. 5,700,723, Cl. 437-214.000.
Barbera, Michael Edward. Pasta tools. 5,699,618, Cl. 30-322.000.
Barbot, André M.; Caruel, Jacques B. J.; and Soligny, Marcel R., to Societe National d'Etude et de Construction de Moteurs d'Aviation S.N.E.C.M.A. Device for cooling and gas turbine rotor. 5,700,130, Cl. 416-95.000.
Bardat, Annie: *See—*
Schmitthaeusler, Roland; and Bardat, Annie, 5,700,426, Cl. 422-29.000.
Bareno, Hendrik Pieter: *See—*
Weiler, Charles A., Jr.; and Bareno, Hendrik Pieter, 5,699,829, Cl. 137-383.000.
Barham, William F., Jr.: *See—*
Davis, James A.; Henegar, Jeffrey W.; and Barham, William F., Jr., 5,700,538, Cl. 428-57.000.
Barker, Jeremy: *See—*
Shi, Hang; Barker, Jeremy; and Koksbang, Rene, 5,700,298, Cl. 29-623.100.
Barlage, William Berdell, III: *See—*
Menhennett, Herbert E.; Barlage, William Berdell, III; and Nowak, Michael T., 5,700,406, Cl. 264-40.400.
Barmag AG: *See—*
Herwegh, Felix; Weide, Nils Holger; and Schumann, Wolfgang, 5,700,491, Cl. 425-72.200.
Meise, Hansjorg, 5,700,490, Cl. 425-72.200.
Barnes, John Franklin; Gutzke, Karl N.; and Hooks, Robert M., to NCH Corporation. Additive system and method for extending the service life of petroleum based hydraulic fluids. 5,700,765, Cl. 508-378.000.
Bar-On, Daniel: *See—*
Weinbaum, David; Bar-On, Daniel; and Tamir, Yoav, 5,701,139, Cl. 345-145.000.
Barrett, Robert D. Pulsing control for an inertial drive system for a multimotor binary array vehicle. 5,701,062, Cl. 318-51.000.
Barsan, Radu; and Lin, Jonathan, to Advanced Micro Devices, Inc. Method for screening non-volatile memory and programmable logic devices. 5,700,698, Cl. 437-8.000.
Barss, Steven H.: *See—*
Moynihan, Edward R.; Gailus, David W.; Palifka, Robert G.; Hoisington, Paul A.; Hine, Nathan P.; Adams-Brady, David; Biggs, Melvin L.; McDonald, Marlene M.; Barss, Steven H.; Mackay, Diane; Paulson, Bruce A.; and Mackay, Stephen C., 5,701,148, Cl. 347-92.000.
Bartelmuss, Heinz: *See—*
Bartelmuss, Klaus; and Bartelmuss, Heinz, 5,699,898, Cl. 198-806.000.
Bartelmuss, Klaus; and Bartelmuss, Heinz. Apparatus for adjusting one of the bearing blocks of a roller. 5,699,898, Cl. 198-806.000.
Barwick, Billie John, Jr.; and Little, James H. Phacoemulsification system having ultrasonic power controlled by aspiration vacuum sensor. 5,700,240, Cl. 604-22.000.
Basavanhally, Nagesh Ramamoorthy, to Lucent Technologies Inc. Alignment and bonding techniques. 5,700,987, Cl. 219-56.100.
BASF Aktiengesellschaft: *See—*
End, Lutz; Horn, Dieter; and Lueddecke, Erik, 5,700,471, Cl. 424-400.000.

Fuchs, Hugo; Ritz, Josef; and Neubauer, Gerald, 5,700,358, Cl. 203-31.000.

Knoll, Konrad; and Gausepohl, Hermann, 5,700,876, Cl. 525-314.000.

Schäfer, Peter; Klintz, Ralf; Hamprecht, Gerhard; Heistracher, Elisabeth; Westphalen, Karl-Otto; Gerber, Matthias; and Walter, Helmut, 5,700,805, Cl. 514-269.000.

Schuhmacher, Rudolf; Dralle-Voss, Gabriele; Oppenlaender, Knut; Wegner, Brigitte; and Hohmann, Andreas, 5,700,351, Cl. 162-75.000.

Sens, Rüdiger; Reichelt, Helmut; and Saling, Peter, 5,700,757, Cl. 503-227.000.

Voss, Jeffrey W.; and Caron, Connie, 5,700,640, Cl. 435-6.000.

BASF Corporation: *See—*

Turnbach, James, 5,700,390, Cl. 252-182.240.

Turnbach, James, 5,700,869, Cl. 524-731.000.

Valoppi, Valeri L., 5,700,843, Cl. 521-51.000.

Bateman, Geoffrey Francis: *See—*

Wills, David; and Bateman, Geoffrey Francis, 5,699,755, Cl. 119-146.000.

Bates, Cary Lee; and Wyman, Blair, to International Business Machines Corporation. System for partial in-line expansion of procedure calls during program compilation. 5,701,489, Cl. 395-705.000.

Bath, Gareth John Richard; and Ring, Steven Richard, to Nokia Mobile Phones Limited. Transmitter/receiver for a TDMA system using common IF SAW filter. 5,701,594, Cl. 455-78.000.

Bathe, Duncan P. L.; Montgomery, Frederick J.; and Roehl, Robin L., to Ohmeda Inc. System for predicting NO_2 concentrations. 5,699,790, Cl. 128-204.220.

Bättig, Rainer: *See—*

Vogel, Paul; Anthamatten, Olivier; and Bättig, Rainer, 5,701,193, Cl. 359-290.000.

Baty, John David, to John Crane Inc. Secondary seal with mechanical gas seal. 5,700,013, Cl. 277-85.000.

Batz, Hans-Georg: *See—*

Seliger, Heinz-Hartmut; Berner, Sibylle; Mühlegger, Klaus; Von der Eltz, Herbert; and Batz, Hans-Georg, 5,700,919, Cl. 536-22.100.

Bauer, Carl J.; and Knesek, Benjamin W., to Southern Clay Products, Inc. Method for extending pigments. 5,700,319, Cl. 106-486.000.

Bauer, François, to Institut Franco Allemand de Recherches de Saint-Louis. Method of polarizing at least one large area sheet of ferroelectric material. 5,700,359, Cl. 204-164.000.

Bauer, John M.: *See—*

Singh, Gurbir; Wang, Wen-Hann; Rhodehamel, Michael W.; Bauer, John M.; and Sarangdhar, Nitin V., 5,701,503, Cl. 395-800.000.

Bauer, Klaus, to Mold-Masters Limited. Valve member locating insert for injection molding nozzle. 5,700,499, Cl. 425-564.000.

Bauer, Klaus: *See—*

Rösch, Wolfgang; Sohn, Erich; Bauer, Klaus; and Bieringer, Hermann, 5,700,758, Cl. 504-106.000.

Baugher, Mark John; Chang, Philip Yen-Tang; Morris, Gregory Lynn; and Stephens, Alan Palmer, to International Business Machines Corporation. Method and apparatus for reserving system resources to assure quality of service. 5,701,465, Cl. 395-610.000.

Baum, Raymond F.: *See—*

Irwin, Bruce C.; Moore, Edward E.; and Baum, Raymond F., 5,700,143, Cl. 431-284.000.

Baumann, Harald; Dwars, Udo; Savariar-Hauck, Celin; and Timpe, Hans-Joachim, to Sun Chemical Corporation. Acetal polymers and use thereof in photosensitive compositions and lithographic printing plates. 5,700,619, Cl. 430-175.000.

Baumgarth, Manfred: *See—*

Gericke, Rolf; Dorsch, Dieter; Baumgarth, Manfred; Minck, Klaus-Otto; and Beier, Norbert, 5,700,839, Cl. 514-618.000.

Baverstock, Nigel: *See—*

van den Akker, Richard Henry; Baverstock, Nigel; and Gibbs, Roy Thomas, 5,699,654, Cl. 53-478.000.

Baxter Healthcare Inc.: *See—*

Bender, James G.; Maples, Phillip B.; Smith, Stephen; Unverzagt, Kristen L.; and Van Epps, Dennis E., 5,700,691, Cl. 435-325.000.

Baxter, Jeffrey H.: *See—*

Masor, Marc Leif; Leach, James Lee; Molitor, Bruce Edward; Benson, John Durand; and Baxter, Jeffrey H., 5,700,590, Cl. 426-656.000.

Bayer Aktiengesellschaft: *See—*

Mittendorf, Joachim; Fey, Peter; Junge, Bodo; Kaulen, Johannes; Laak, Kai van; Meier, Heinrich; and Schohe-Loop, Rudolf, 5,700,948, Cl. 548-531.000.

Bayer Corporation: *See—*

Boiarski, Anthony; and Dosmann, Andrew, 5,701,181, Cl. 356-446.000.

Baylog, Melissa A.: *See—*

Babacz, Robert J.; Narendrnath, Kadthala R.; Frake, Kevin; and Baylog, Melissa A., 5,700,327, Cl. 134-1.100.

Baynham, David Elwyn: *See—*

Orlowska, Anna Helena; Bradshaw, Thomas William; and Baynham, David Elwyn, 5,701,040, Cl. 310-13.000.

Beadman, Michael Andrew; and Thompson-Bell, Ian, to Esselte N.V. Printing device. 5,700,098, Cl. 400-615.200.

Beahan, Brendan: *See—*

Anderson, Mark Stephen; Yesberg, John Desborough; Pope, Michael; Nayda, Lisa; Hayman, Ken; and Beahan, Brendan, 5,701,342, Cl. 380-4.000.

Beasley, Andrew S.: *See—*

Dolan, John M.; and Beasley, Andrew S., 5,701,579, Cl. 455-3.100.

Beaudry, Gary A.; Bertelsen, Arthur H.; Sherman, Michael I.; and Vogelstein, Bert, to Genzyme Corporation. Vectors and vector systems including genes encoding tumor suppressor proteins and producer cells transformed thereby. 5,700,657, Cl. 435-69.100.

Beaulieu, Pierre Louis; Déziel, Robert; and Lavallée, Pierre, to Boehringer Ingelheim (Canada), Ltd. Antiviral peptide derivatives having a 2-oxoalkyl amino acid side chain. 5,700,780, Cl. 514-17.000.

Beauvais, Donald A.: *See—*

Schmenk, Steven R.; and Beauvais, Donald A., 5,701,141, Cl. 345-157.000.

Becker, Achim: *See—*

Zettlmeissl, Gerd; Karges, Hermann Erich; and Becker, Achim, 5,700,663, Cl. 435-69.600.

Becker, Christopher Hank: *See—*

Monforte, Joseph Albert; Becker, Christopher Hank; Shaler, Thomas Andrew; and Pollart, Daniel Joseph, 5,700,642, Cl. 435-6.000.

Becker, David S.; and Keller, David J., to Micron Technology, Inc. Highly selective nitride spacer etch. 5,700,580, Cl. 428-446.000.

Beckett, Arnold H.; Swon, James E.; and Hofer, Henry Z. Device maximizing dispersion of aggregate in liquid diluent. 5,700,087, Cl. 366-241.000.

Beckett, Raymond Paul: *See—*

Dickens, Jonathan Philip; Crimmin, Michael John; and Beckett, Raymond Paul, 5,700,838, Cl. 514-575.000.

Beckman Instruments, Inc.: *See—*

Lu, Carrie J.; and Yein, Fredrick S., 5,700,653, Cl. 435-15.000.

Beckman, John A., to Dana Corporation. Removable cross member for vehicle frame. 5,700,033, Cl. 280-795.000.

Becton, Dickinson and Company: *See—*

Burns, James A., 5,699,923, Cl. 215-247.000.

Erskine, Timothy J., 5,700,250, Cl. 604-263.000.

Sheiness, Diana K.; Adams, Trevor H.; Stamm, Michael R.; Cangelosi, Gerard A.; Britschgi, Theresa B.; and Dix, Connie K., 5,700,636, Cl. 435-6.000.

Sweet, Richard G., 5,700,692, Cl. 436-50.000.

Becton Dickinson France S.A.: *See—*

Grimard, Jean Pierre; and Olive, Eric, 5,700,247, Cl. 604-220.000.

Bedminster Bioconversion Corporation: *See—*

Finn, Larry J., 5,700,687, Cl. 435-266.000.

Bee, Timothy G.: *See—*

Hahnfeld, Jerry L.; Bee, Timothy G.; Kirkpatrick, Donald E.; Tung, Lu Ho; and Pike, William C., 5,700,887, Cl. 526-182.000.

Behan, Niall D.: *See—*

Sargeant, Steven J.; Behan, Niall D.; Atherton, Dave; Yang, Sen; Huang, Miaoling; and Sun, Kang, 5,700,582, Cl. 420-476.600.

Behe, Thomas J.; Gilmore, Daniel R., III; and Thayer, Bruce E., to Xerox Corporation. Ceramic coated detoning roll for xerographic cleaners. 5,701,572, Cl. 399-354.000.

Behm, Stephen M.: *See—*

Highman, Timothy J.; Smerdel, Michael E.; and Behm, Stephen M., 5,700,365, Cl. 204-469.000.

Behr GmbH & Co.: *See—*

Nieling, Andreas; Frank, Wolfgang; Kissel, Holger; Koehler, Reinhard; and Mueller, Werner, 5,700,191, Cl. 454-69.000.

Behringwerke Aktiengesellschaft: *See—*

Zettlmeissl, Gerd; Karges, Hermann Erich; and Becker, Achim, 5,700,663, Cl. 435-69.600.

Beier, Norbert: *See—*

Gericke, Rolf; Dorsch, Dieter; Baumgarth, Manfred; Minck, Klaus-Otto; and Beier, Norbert, 5,700,839, Cl. 514-618.000.

Beiersdorf Aktiengesellschaft: *See—*

Langenstück, Holger, 5,699,907, Cl. 206-349.000.

Beinglass, Israel; and Carlson, David K., to Applied Materials, Inc. Low temperature, high pressure silicon deposition method. 5,700,520, Cl. 427-255.100.

Beitelman, Leonid; and Mulcahy, Joseph A., to J. Mulcahy Enterprises Inc. Method and apparatus for control of stirring in continuous casting of metals. 5,699,850, Cl. 164-468.000.

Bell Atlantic Network Services, Inc.: *See—*

McConnell, Von K., 5,701,419, Cl. 395-227.000.

Bell Communications Research, Inc.: *See—*

Denis, Sophie; Orsini, Francois; Tarascon, Jean-Marie; and Touboul, Marcel, 5,700,598, Cl. 429-218.000.

Patel, Jayantilal Shamjibhai, 5,701,168, Cl. 349-130.000.

Bell, James Alexander E.: *See—*

Ettel, Victor Alexander; Ambrose, John; Cushnie, Kirt Kenneth; Bell, James Alexander E.; Paserin, Vladimir; and Kalal, Peter Joseph, 5,700,363, Cl. 205-271.000.

Bell, James S., to Dell U.S.A., L.P. Device for securing an electronic component to a pin grid array socket. 5,699,954, Cl. 228-180.100.

Bell, J. Ellis: *See—*

Watanabe, Kyoichi A.; Pankiewicz, Krzystof W.; Goldstein, Barry M.; and Bell, J. Ellis, 5,700,786, Cl. 514-47.000.

Bell, Mace H.; and Sienkiewicz, Henry R., to United States Surgical Corporation. Articulating endoscopic surgical instrument. 5,700,275, Cl. 606-208.000.

Bellemare, Richard A.; and Keplinger, Edward G., to Pitney Bowes Inc. Apparatus and method for selective archiving of facsimile messages. 5,701,183, Cl. 358-404.000.

Bellini, Pierluigi. Underwater communication system by means of coded pulses. 5,701,276, Cl. 367-133.000.

Bello, Salvatore H.; and Howanski, John W., to Conductron Corporation. Aerial cable spacer. 5,700,980, Cl. 174-146.000.

Bellows, William; Nelson, Paul; and Messner, Mark, to Graco Children's Products Inc. Child entertainment device with flexible support legs. 5,700,201, Cl. 472-103.000.

BellSouth Corporation: *See—*

Weisser, Frank J., Jr., 5,701,301, Cl. 370-428.000.

Williamson, William A., III, 5,701,352, Cl. 381-104.000.

Beloit Technologies, Inc.: *See—*

Didier, James J., 5,700,357, Cl. 162-358.300.

Belzile, Rolland: *See—*

Berger, Régis; Gauthier, Yves; Couillard, Albert; and Belzile, Rolland, 5,699,915, Cl. 206-597.000.

BeMent, Bradley Earl; Tiedje, Kevin Mark; and Crawford, Robert Dennis, to Ford Motor Company. Method and system for detecting fault conditions on multiplexed networks. 5,701,410, Cl. 395-183.190.

Benayoun, Alain; Fieschi, Jacques; Michel, Patrick; and LePennec, Jean-Francois, to International Business Machines Corporation. System for performing data compression based on a Liu-Zempel algorithm. 5,701,468, Cl. 395-612.000.

Benazet, Jean D.: *See—*

David, Patrick; Benazet, Jean D.; and Narcy, Bruno, 5,700,517, Cl. 427-226.000.

Benco, John S.: *See—*

Chan, Andy D. C.; Boden, Mark W.; Benco, John S.; Bergquist, Robert A.; and Orvedahl, Donna S., 5,700,360, Cl. 204-400.000.

Bender, Fredric G.; Mostoller, Charles; and Frankovich, Evelyn Marie, to Rhone-Poulenc Inc. Process for treating red meat, poultry and seafood to control bacterial contamination and/or growth. 5,700,507, Cl. 426-332.000.

Bender, James G.; Maples, Phillip B.; Smith, Stephen; Unverzagt, Kristen L.; and Van Epps, Dennis E., to Baxter Healthcare Inc. Method for the preparation of in vitro-derived human neutrophil precursor cells. 5,700,691, Cl. 435-325.000.

Bendick, Harry J.; and Kraner, Bret M. Elongate composite structural member and method of making. 5,700,543, Cl. 428-71.000.

Bendio, Jeff: *See—*

Romaneschi, Daniel J.; and Bendio, Jeff, 5,699,987, Cl. 248-89.000.

Bendix, Dieter: *See—*

Hurst, Achim; Winkler-Gwienek, Wladis; Buchholz, Berthold; Bendix, Dieter; and Entenmann, Gunther, 5,700,901, Cl. 528-354.000.

Benecke, Rainer, to Olympus Winter & Ibe GmbH. Surgical forceps. 5,700,276, Cl. 606-208.000.

Benkö , Zoltan: *See—*

Van Heertum, John C.; Kleschick, William A.; Arndt, Kim E.; Costales, Mark J.; Ehr, Robert J.; Bradley, Kimberly Brubaker; Reifschneider, Walter; Benkö , Zoltan; Ash, Mary Lynne; and Jachetta, John J., 5,700,940, Cl. 546-119.000.

Bennett, Christopher: *See—*

Morrison, Gary Wayne; Mann, Stephen; and Bennett, Christopher, 5,700,755, Cl. 503-227.000.

Bennett, Frances K.: *See—*

Yang, Yu-Chung; Bennett, Frances K.; and Paul, Stephan R., 5,700,664, Cl. 435-69.520.

Bennett, Paul F.; Adams, John P.; and Gomez, Arturo C., to Utility Trailer Manufacturing Company. Wall and logistics track construction for a refrigerated vehicle. 5,700,118, Cl. 410-113.000.

Bennett, Tom: *See—*

Guthrie, Dale; and Bennett, Tom, 5,700,207, Cl. 473-313.000.

Benson, John Durand: *See—*

Masor, Marc Leif; Leach, James Lee; Molitor, Bruce Edward; Benson, John Durand; and Baxter, Jeffrey H., 5,700,590, Cl. 426-656.000.

Benz, Volker: *See—*

Müller, Michael; Benz, Volker; Numrich, Uwe; Pühler, Horst; and Wopker, Wilhelm, 5,700,566, Cl. 428-332.000.

Berde, Charles B.; and Langer, Robert S., to Children's Medical Center Corporation. Prolonged nerve blockade by the combination of local anesthetic and glucocorticoid. 5,700,485, Cl. 424-501.000.

Berg, Charles John, Jr.: *See—*

Joseph, Gary Curtis; Berg, Charles John, Jr.; and Pollard, Ricky Alan, 5,699,911, Cl. 206-494.000.

Berge, Gilles; Eustache, Jean-Pierre; Princet, Joël; and Bouy, Gilbert, to Valeo Systemes De'Essuyage. Windscreen wiper device with drive head to shaft connection. 5,699,582, Cl. 15-250.340.

Berger, Michael: *See—*

Sachdev, Krishna G.; Berger, Michael; and Chace, Mark S., 5,700,581, Cl. 428-447.000.

Berger Mix Inc.: *See—*

Berger, Régis; Gauthier, Yves; Couillard, Albert; and Belzile, Rolland, 5,699,915, Cl. 206-597.000.

Berger, Régis; Gauthier, Yves; Couillard, Albert; and Belzile, Rolland, to Berger Mix Inc. Palletized peat moss in bulk compressed form. 5,699,915, Cl. 206-597.000.

Berger, Steven David; Liddle, James Alexander; and Watson, George Patrick, to Lucent Technologies Inc. Projection lithography apparatus. 5,701,014, Cl. 250-492.220.

Bergmann, Konrad; Fait, Claudio; and Läller, Klaus-Jürgen, to Ideal-Standard GmbH. Showerhead and bottom portion thereof. 5,699,964, Cl. 239-108.000.

Bergquist, Robert A.: *See—*

Chan, Andy D. C.; Boden, Mark W.; Benco, John S.; Bergquist, Robert A.; and Orvedahl, Donna S., 5,700,360, Cl. 204-400.000.

Bergstresser, William A.: *See—*

Stiehl, Mark A.; Bergstresser, William A.; and Niedospial, John J., 5,700,246, Cl. 604-198.000.

Berlin, Gary J., to United States of America, Energy. Method for compression of data using single pass LZSS and run-length encoding. 5,701,125, Cl. 341-63.000.

Bernard, Vincent, to Bertrand Faure Equipements S.A. Securable locking device for a movable element of an automobile vehicle seat. 5,700,056, Cl. 297-378.130.

Berndt, Karlheinz: *See—*

Klatt, Bruno; Horx, Manfred; Koelling, Hartmut; Berndt, Karlheinz; Krueger, Gerhard; Kuenne, Hans-Joachim; Moerl, Lothar; and Backhauss, Lothar, 5,700,572, Cl. 428-357.000.

Berner, Sibylle: *See—*

Seliger, Heinz-Hartmut; Berner, Sibylle; Mühlegger, Klaus; Von der Eltz, Herbert; and Batz, Hans-Georg, 5,700,919, Cl. 536-22.100.

Berol Nobel AB: *See—*

Hellsten, Martin; and Harwigsson, Ian, 5,700.766, Cl. 508-500.000.

Berson, William, to Pitney Bowes Inc. Service and usage data collection using a special mail piece. 5,701,249, Cl. 364-464.180.

Bertani, Marco: *See—*

Bombardelli, Ezio; Mustich, Giuseppe; and Bertani, Marco, 5,700,468, Cl. 424-195.100.

Bertelsen, Arthur H.: *See—*

Beaudry, Gary A.; Bertelsen, Arthur H.; Sherman, Michael I.; and Vogelstein, Bert, 5,700,657, Cl. 435-69.100.

Berthold, Thomas, to Siemens Aktiengesellschaft. Process and device for casting a large-area crystalline salt body. 5,700,404, Cl. 264-1.210.

Bertin, Kim C., to Zimmer, Inc. Device for measuring leg length and off-set for a total hip replacement. 5,700,268, Cl. 606-102.000.

Bertrand Faure Equipements S.A.: *See—*

Bernard, Vincent, 5,700,056, Cl. 297-378.130.

Bertrand, John E.: *See—*

Burchard, Thomas H.; Hunter, Gregory; Johnson, Kevin M.; Karg, Jeffery; and Bertrand, John E., 5,699,832, Cl. 137-614.200.

Berwanger, Fred William; and Reynolds, Daniel S., to AlliedSignal Inc. Multi-disc brake actuator for vibration damping. 5,699,881, Cl. 188-71.500.

Bessette, Robert: *See—*

Masse, Robert; Dion, Alain; Bessette, Robert; and Tran, Khiem, 5,700,494, Cl. 425-131.100.

Best Block Company: *See—*

VonDross, Kelly L., 5,700,983, Cl. 181-285.000.

Bestgen, Michael J.; Kramer, Richard B.; Moulden, Daniel P.; Barbee, Chris; and Hibbetts, Bryon, to FMC Corporation. Cable driven conveyor system. 5,699,894, Cl. 198-678.100.

BetzDearborn Inc.: *See—*

Kuo, Lawrence Lu; Leung, Roger Yiming; and Williams, Kenneth Samuel, 5,700,893, Cl. 526-307.100.

Ouyang, Jiangbo; and Harpel, William L., 5,700,525, Cl. 427-416.000.

Beverage, Allan D., to General Electric Company. Exhaust nozzle of a gas turbine engine. 5,699,966, Cl. 239-265.190.

Bevington, Jack T., to McNeil (Ohio) Corporation. Centrifugal pump. 5,700,138, Cl. 417-366.000.

Bezwada, Rao S.: *See—*

Jamiolkowski, Dennis D.; and Bezwada, Rao S., 5,700,583, Cl. 428-482.000.

Bhargava, Gautam; Goel, Piyush; and Iyer, Balakrishna Ragmavendra, to International Business Machines Corporation. Simplification of SQL queries using generalized inference propagation and generalized transitive closure. 5,701,454, Cl. 395-602.000.

Bhargava, Gautam; Goel, Piyush; and Iyer, Balakrishna Ragmavendra, to International Business Machines Corporation. Method and apparatus for reordering complex SQL queries using a modified generalized outer join operator. 5,701,455, Cl. 395-602.000.

Biebl, Markus, to Siemens Aktiengesellschaft. Method for drying micromechanical components. 5,700,379, Cl. 216-2.000.

Biebl, Markus: *See—*

Klose, Helmut; Biebl, Markus; Scheiter, Thomas; and Hierold, Christofer, 5,700,702, Cl. 437-34.000.

Biegajski, James E.; Venkatraman, Subbu S.; and Scott, Ann M., to Cygnus, Inc. Water-soluble pressure-sensitive mucoadhesive and devices provided therewith for emplacement in a mucosa-lined body cavity. 5,700,478, Cl. 424-434.000.

Biere, Helmut; Huth, Andreas; Rahtz, Dieter; Schmiechen, Ralph; Seidelmann, Dieter; Kehr, Wolfgang; Schneider, Herbert Hans; Engelstoft, Mogens; Hansen, Bondo John; Waetjen, Frank; and Honoré , Tage, to Schering Aktiengesellschaft. 5- or 6-substituted β-carboline-3-carboxylic acid esters. 5,700,808, Cl. 514-292.000.

Biering, Lothar: *See—*

Kammerer, Eric; Biering, Lothar; Grohs, Erhard; Groht, Klaus; Reynvaan, Conrad; Siegmund, Horst; Spangenberg, Jorgen; and Uecker, Arwed, 5,701,046, Cl. 310-251.000.

Bieringer, Hermann: *See—*

Rösch, Wolfgang; Sohn, Erich; Bauer, Klaus; and Bieringer, Hermann, 5,700,758, Cl. 504-106.000.

Biggs, Melvin L.: *See—*

Moynihan, Edward R.; Gailus, David W.; Palifka, Robert G.; Hoisington, Paul A.; Hine, Nathan P.; Adams-Brady, David; Biggs, Melvin L.; McDonald, Marlene M.; Barss, Steven H.; Mackay, Diane; Paulson, Bruce A.; and Mackay, Stephen C., 5,701,148, Cl. 347-92.000.

Bigi, Dante: *See*—
Heilig, Alexander; and Bigi, Dante, 5,700,031, Cl. 280-731.000.
Billieres, Jean, to Compagnie Generale des Etablissements Michelin - MICHELIN & CIE. Process for the manufacture of a tire having a carcass reinforcement which is formed of at least one ply of cords or cables. 5,700,339, Cl. 156-117.000.
Billingham, John Fredric; and Lockett, Michael James, to Praxair Technology, Inc. Distillation column employing structured packing which reduces wall flow. 5,700,403, Cl. 261-112.200.
BioBalance A/S: *See*—
Helmo, Kim, 5,700,370, Cl. 210-94.000.
Biochlor (Proprietary) Limited: *See*—
Woodman, Peter, 5,699,939, Cl. 222-166.000.
Bioresearch, Inc.: *See*—
Kurtz, Robert J.; and Fuller, William D., 5,700,792, Cl. 514-171.000.
Biosignal L.T.D.: *See*—
Hirth, Klaus Peter; Schwartz, Donna Pruess; Mann, Elaina; Shawver, Laura Kay; Kéri, György; Székely, István; Bajor, Tamás; Haimichael, Janis; Orfi, László; Levitzki, Alex; Gazit, Aviv; Ullrich, Axel; and Lammers, Reiner, 5,700,823, Cl. 514-380.000.
Birch, Kent N., executor: *See*—
Weinhardt, Robert; Lindfors, Allen J.; Rieger, James L., deceased, 5,701,101, Cl. 327-561.000.
Bisaiji, Takashi; Yu, Hideo; Kawaishi, Yasunori; Motohashi, Toshiaki; Takahashi, Mitsuru; and Kamiyama, Hideki, to Ricoh Company, Ltd. Image transferring device for an image forming apparatus. 5,701,566, Cl. 399-302.000.
Bischof, Rudolf, to Sulzer Chemtech AG. Method and apparatus for separating a substance from a liquid mixture by fractional crystallization. 5,700,435, Cl. 422-245.100.
Bishai, William R.; Young, Douglas B.; Zhang, Ying; and DeMaio, James, to Johns Hopkins University, The. DNA encoding stationary phase, stress response sigma factor from *Mycobacterium tuberculosis*. 5,700,925, Cl. 536-23.100.
Bishop, Justin D.: *See*—
Bishop, Robert J.; and Bishop, Justin D., 5,700,108, Cl. 405-26.000.
Bishop, Robert J.; and Bishop, Justin D. Dynamic reef, method of use, and shoreline erosion control system employing same. 5,700,108, Cl. 405-26.000.
Bissett, Donald Lynn: *See*—
Yue, Jiang; Dew, Lisa Renee; and Bissett, Donald Lynn, 5,700,451, Cl. 424-59.000.
Bissonnette, Claude. Cutting nozzle assembly for a postmixed oxy-fuel gas torch. 5,700,421, Cl. 266-48.000.
Bissonnette, Laurent C. Hydraulic impulse speargun. 5,699,780, Cl. 124-69.000.
Bistry, David: *See*—
Glew, Andrew F.; Mennemeier, Larry M.; Peleg, Alexander D.; Bistry, David; Mittal, Millind; Dulong, Carole; Kowashi, Eiichi; Eitan, Benny; Lin, Derrick; and Vakkalagadda, Ramamohan R., 5,701,508, Cl. 395-800.000.
Bitterich, Wolfgang, to Heidelberger Druckmaschinen Aktiengesellschaft. Guard provided at a printing machine. 5,699,734, Cl. 101-216.000.
Björklund, Per-Erik; Jonsson, Tomas; and Juhlin, Lars-Erik, to Asea Brown Boveri AB. High-voltage direct current transmission installation having a high voltage regulation capability. 5,701,239, Cl. 363-35.000.
Black & Decker Inc.: *See*—
Melito, M. Anthony; and Rebres, Robert P., 5,699,586, Cl. 15-383.000.
Stone, Paul Andrew; and Thomas, Rickey James, 5,700,113, Cl. 408-1.00R.
Black, Gary: *See*—
Bowen, Larry; Ayres, George Edward; Black, Gary; and Daoust, Jacques, 5,699,812, Cl. 131-374.000.
Blair, Leslie Mitchell, to Du Pont de Nemours, E. I., and Company. Process for polymerization of copolymers of tetrafluoroethylene and hexafluoropropylene. 5,700,889, Cl. 526-247.000.
Blanchard, Richard A.: *See*—
Bulucea, Constantin; and Blanchard, Richard A., 5,701,023, Cl. 257-341.000.
Blando, Charles. Appetizing pacifier. 5,700,279, Cl. 606-236.000.
Blaner, Bartholomew: *See*—
Jeremiah, Thomas Leo; and Blaner, Bartholomew, 5,701,430, Cl. 395-445.000.
Blanyer, Richard J.: *See*—
Baer, Jose T.; Davis, Bill C.; and Blanyer, Richard J., 5,701,068, Cl. 320-15.000.
Blimke, Ross Arthur. Perforating gun brake. 5,700,968, Cl. 102-312.000.
Blin, Patrick; Daniel, Jean-Yves; and Saulas, Alain, to Mead Corporation, The. Multiple compartment separable container. 5,699,957, Cl. 229-117.120.
Bloch, Didier; Le Cras, Frédéric; and Strobel, Pierre, to Commissariat a l'Energie Atomique; Electricite de France Service National; Bollore Technologies S.A.; and Sadacem, S.A. Insertion compounds based on manganese oxide usable as the positive electrode active material in a lithium battery. 5,700,442, Cl. 423-599.000.
Bloom, Joy Sawyer, to Du Pont de Nemours, E. I., and Company. Polyimide polymeric blends. 5,700,863, Cl. 524-406.000.
Blue Coral, Inc.: *See*—
Fausnight, Ronald L.; and Lupyan, David A., 5,700,312, Cl. 106-10.000.
Board of Regents, The University of Texas System: *See*—
Richards-Kortum, Rebecca; Pitris, Costas; and Mitchell, Michele Follen, 5,699,795, Cl. 128-634.000.
Board of Supervisors of Louisiana State University and Agricultural and Mechanical College, The: *See*—
Cincotta, Anthony H.; Meier, Albert H.; and Wilson, John M., 5,700,795, Cl. 514-200.000.
Board of Supervisors of Louisiana University and Agricultural and Mechanical College, The: *See*—
Cincotta, Anthony H.; and Meier, Albert H., 5,700,800, Cl. 514-250.000.
Boatwalla, Cyrus D., to H.H. Brown Shoe Company, Inc. Footwear system for use in driving. 5,699,628, Cl. 36-59.00C.
BOC Group plc, The: *See*—
Huntley, Graeme, 5,700,134, Cl. 417-153.000.
Bock, Heinz, to TRW Occupant Restraint Systems GmbH. Force limiter for vehicle safety belt systems. 5,700,035, Cl. 280-805.000.
Boden, Mark W.: *See*—
Chan, Andy D. C.; Boden, Mark W.; Benco, John S.; Bergquist, Robert A.; and Orvedahl, Donna S., 5,700,360, Cl. 204-400.000.
Bodhaine, James, to Vita International, Inc. Breakaway coupling device. 5,699,822, Cl. 137-68.150.
Bodin, Roland: *See*—
Kallin, Harald; and Bodin, Roland, 5,701,592, Cl. 455-69.000.
Boechel, Thomas E. Device for displaying electric lamps. 5,700,083, Cl. 362-249.000.
Boehringer Ingelheim GmbH: *See*—
Schnorrenberg, Gerd; Esser, Franz; Dollinger, Horst; Jung, Birgit; Speck, Georg; and Burger, Erich, 5,700,827, Cl. 514-414.000.
Boehringer Ingelheim KG: *See*—
Hurst, Achim; Winkler-Gwienek, Wladis; Buchholz, Berthold; Bendix, Dieter; and Entenmann, Gunther, 5,700,901, Cl. 528-354.000.
Boehringer Ingelheim (Canada), Ltd.: *See*—
Beaulieu, Pierre Louis; Déziel, Robert; and Lavallée, Pierre, 5,700,780, Cl. 514-17.000.
Boehringer Mannheim GmbH: *See*—
Trauth, Bernhard; Hinzpeter, Matthias; Doppler, Clemens; and Russmann, Eberhard, 5,700,639, Cl. 435-6.000.
Boehringer Mannhiem GmbH: *See*—
Seliger, Heinz-Hartmut; Berner, Sibylle; Mühlegger, Klaus; Von der Eltz, Herbert; and Batz, Hans-Georg, 5,700,919, Cl. 536-22.100.
Boeing Company, The: *See*—
Matsen, Marc R., 5,700,995, Cl. 219-615.000.
McCowin, Peter D., 5,700,347, Cl. 156-425.000.
Boeing North American, Inc.: *See*—
James, David C.; Clymer, John R.; Corey, Philip D.; and Nili, Nafise, 5,701,439, Cl. 395-500.000.
Boettger, Conrad H.; and Hawks, Bill J., Jr., to St. Francis Research Institute. Coupler clamping apparatus for interconnecting a free-standing, wheeled intravenous pole with mobile patient transfer devices. 5,699,988, Cl. 248-122.100.
Boh, Satoru: *See*—
Watanabe, Hideo; Boh, Satoru; Miyata, Akira; and Shiotani, Keiichi, 5,701,403, Cl. 395-119.000.
Böhm, Kurt: *See*—
Koch, Norbert; Böhm, Kurt; Schefcsik, Nikolaus; and Eipper, Jürgen, 5,699,884, Cl. 188-196.00B.
Boiarski, Anthony; and Dosmann, Andrew, to Bayer Corporation. Fiber optic diffuse light reflectance sensor utilized in the detection of occult blood. 5,701,181, Cl. 356-446.000.
Boittiaux, Patrick; Couvret, Virginie; and Joubert, Daniel, to Rhone-Poulenc Chimie. Method of washing with detergent compositions comprising amorphous silicoaluminate scavengers of calcium precipitates. 5,700,294, Cl. 8-137.000.
Bollore Technologies S.A.: *See*—
Bloch, Didier; Le Cras, Frédéric; and Strobel, Pierre, 5,700,442, Cl. 423-599.000.
Bombardelli, Ezio; Mustich, Giuseppe; and Bertani, Marco, to Indena SpA. Extracts of ginko biloba and their methods of preparation. 5,700,468, Cl. 424-195.100.
Bone Care International, Inc.: *See*—
Gulbrandsen, Carl E.; and Moss, Richard L., 5,700,790, Cl. 514-167.000.
Bongers-Ambrosius, Hans-Werner; and Eichhorn, Jörg, to Hilti Aktiengesellschaft. Tool bit chuck. 5,700,018, Cl. 279-19.400.
Bonneau, Walt C., Jr.; Guttag, Karl; and Gove, Robert, to Texas Instruments Incorporated. Architecture of a chip having multiple processors and multiple memories. 5,701,507, Cl. 395-800.000.
Bonnema, James; Wang, Wen Der; Demarest, Scott W.; Furner, Paul E.; and Hildebrandt, Donald W., to Schawbel Corporation, The. Device for dispensing a volatile substance. 5,700,430, Cl. 422-125.000.
Boor, Peter M.: *See*—
Born, Gary A.; Roberts, Thomas A.; and Boor, Peter M., 5,699,662, Cl. 60-39.500.
Bopp, Alvin F. Hydrocarbon absorbent. 5,700,558, Cl. 428-316.600.
Borden Chemical, Inc.: *See*—
Shiau, David Wen-I; Detlefsen, William David; and Phillips, Earl Kay, 5,700,587, Cl. 428-528.000.
Borealis Polymers Oy: *See*—
Laiho, Erkki; and Sainio, Markku, 5,700,586, Cl. 428-507.000.
Boreaus Technical Limited: *See*—
Cox, Isaiah Watas, 5,699,668, Cl. 62-3.100.
Borg-Warner Automotive, Inc.: *See*—

Kuznets, Sam A.; and Mortellaro, John, Jr., 5,700,214, Cl. 474-110.000.
Showalter, Dan J., 5,699,888, Cl. 192-35.000.
Simpson, Roger T.; and Todd, Kevin B., 5,700,213, Cl. 474-110.000.
Simpson, Roger T.; and Mott, Philip J., 5,700,216, Cl. 474-110.000.
Warren, James David, 5,699,870, Cl. 180-247.000.
Borg-Warner Automotive, K.K.: *See*—
Tada, Naosumi; and Sakamoto, Naoji, 5,700,215, Cl. 474-110.000.
Wakabayashi, Shozo, 5,700,217, Cl. 474-217.000.
Born, Gary A.; Roberts, Thomas A.; and Boor, Peter M., to Lockheed Martin Corporation. Infrared suppression exhaust duct system for a turboprop propulsion system for an aircraft. 5,699,662, Cl. 60-39.500.
Born, Joseph: *See*—
Banes, Cheryl Ann; and Born, Joseph, 5,699,816, Cl. 132-285.000.
Borthwick, James Thomas, Jr.; and Zalud, Christopher Michael, to Magnetrol International, Inc. Insulated capacitance probe. 5,701,084, Cl. 324-690.000.
Bortins, John: *See*—
Amin, Nurul; Bortins, John; and Yan, Ying, 5,699,605, Cl. 29-603.140.
Bose Corporation: *See*—
Parison, James A.; Froeschle, Thomas A.; and Mareaca, Robert L., 5,701,039, Cl. 310-12.000.
Bosschaerts, Jacobus; Govaert, René; and Delabastita, Paul, to Agfa-Gevaert N.V. Time modulated stochastic screening. 5,700,610, Cl. 430-30.000.
Bott, Richard Ray; Caldwell, Robert Mark; Cunningham, Brian C.; Estell, David Aaron; Power, Scott Douglas; and Wells, James Allen, to Genencor International Inc. Modified substilisins having amino acid alterations. 5,700,676, Cl. 435-221.000.
Bottomley, Paul A.: *See*—
Atalar, Ergin; Bottomley, Paul A.; and Zerhouni, Elias A., 5,699,801, Cl. 128-653.200.
Bourgeois, Kenneth W.; Morris, Thomas R.; Morris, Joseph R.; and Morris, John F., to Southeast Walls, Inc. Foam building block. 5,699,640, Cl. 52-309.400.
Boutaghou, Zine-Eddine, to Seagate Technology, Inc. Flex on suspension design minimizing sensitivities to environmental stresses. 5,701,218, Cl. 360-104.000.
Bouy, Gilbert: *See*—
Berge, Gilles; Eustache, Jean-Pierre; Princet, Joël; and Bouy, Gilbert, 5,699,582, Cl. 15-250.340.
Bowen, Larry; Ayres, George Edward; Black, Gary; and Daoust, Jacques, to Rothmans, Benson & Hedges Inc. Smoking product. 5,699,812, Cl. 131-374.000.
Bowen, Thomas, to New Venture Gear, Inc. Full-time transfer case with integrated planetary gear assembly. 5,700,222, Cl. 475-204.000.
Bowman, Reid Henry; and Goltz, H. Robert, to MG Generon, Inc. Removal of oil from compressed gas with macroporous polymeric adsorbent. 5,700,310, Cl. 95-45.000.
Boyle, Bruce W.; and Muller, Laurent E., to Schlumberger Technology Corporation. Method for placing cable within coiled tubing. 5,699,996, Cl. 254-134.400.
Boysel, Robert M.: *See*—
Magel, Gregory A.; and Boysel, Robert M., 5,701,372, Cl. 385-24.000.
Boyter, Ruben C.: *See*—
Cousins, James E.; Markiel, George R.; and Boyter, Ruben C., 5,699,866, Cl. 175-78.000.
BPM Technology, Inc.: *See*—
Menhennett, Herbert E.; Barlage, William Berdell, III; and Nowak, Michael T., 5,700,406, Cl. 264-40.400.
Bradley, Kimberly Brubaker: *See*—
Van Heertum, John C.; Kleschick, William A.; Arndt, Kim E.; Costales, Mark J.; Ehr, Robert J.; Bradley, Kimberly Brubaker; Reifschneider, Walter; Benkö , Zoltan; Ash, Mary Lynne; and Jachetta, John J., 5,700,940, Cl. 546-119.000.
Bradshaw, Thomas L: *See*—
Dreyer, John F., Jr.; Bradshaw, Thomas L; Burns, David M.; Pavelka, Lee A.; and Orensteen, Bruce D., 5,700,077, Cl. 362-32.000.
Bradshaw, Thomas William: *See*—
Orlowska, Anna Helena; Bradshaw, Thomas William; and Baynham, David Elwyn, 5,701,040, Cl. 310-13.000.
Brady, Don: *See*—
Miller, Scott; Brady, Don; Williamson, Steven; Luftig, Steven; and Musto, Dominick, 5,700,141, Cl. 431-125.000.
Miller, Scott; Brady, Don; Williamson, Steven; Luftig, Steven; and Musto, Dominick, 5,700,142, Cl. 431-125.000.
Brand, John R.; and Green, Kelly A., to Kerr-McGee Chemical Corporation. Durable pigments for plastic. 5,700,318, Cl. 106-442.000.
Brandenburg, Karlheinz: *See*—
Herre, Jürgen; Grill, Berhard; Eberlein, Ernst; Brandenburg, Karlheinz; and Seitzer, Dieter, 5,701,346, Cl. 381-18.000.
Brandli, Stephen A.; and Jones, William P., to Microsoft Corporation. Method and system for generating accurate search results using a content-index. 5,701,469, Cl. 395-613.000.
Branger, Robert Michael. Molded polymeric foam preparation method. 5,700,407, Cl. 264-54.000.
Brannan, Michael H.; Garcia, Jorge Luis; Nichols, Jerry Ray; and Tokiyama, Masaru, to Motorola, Inc. Microphone for a two way radio. 5,701,355, Cl. 381-169.000.
Braseth, David L.; Eiden, Glen P.; and Smith, Ronald Q., to Unisys Corporation. System for optimally storing a data file for enhanced query processing. 5,701,473, Cl. 395-621.000.
Brasil International (Taiwan) Corp.: *See*—
Chen, Yi-Rong, 5,701,478, Cl. 395-652.000.
Brasile, Lauren, to Breonics Inc. Diagnostic methods for monitoring functional charcteristics of an organ intended for transplantation. 5,699,793, Cl. 128-630.000.
Braxton, Scott Michael; Diep, Dinh; and Stuart, Susan G., to Incyte Pharmaceuticals, Inc. Serpin derived from human hypothalamus. 5,700,924, Cl. 536-23.100.
Brehm, Manfred; Neeb, Rolf; Scharnke, Wolfgang; and Kerscher, Volker, to Roehm GmbH Chemische Fabrik. UV-curable scratch-resistant varnish having a thickener which becomes bound in the composition of the varnish by polymerization. 5,700,576, Cl. 428-412.000.
Breitbart, Arnold S.; and Grande, Daniel A., to North Shore University Hospital Research Corporation. Tissue-engineered bone repair using cultured periosteal cells. 5,700,289, Cl. 623-16.000.
Brennan, James, Jr., to Intel Corporation. Negative voltage switching circuit. 5,701,272, Cl. 365-230.060.
Brennan, William James. Magnetic post card and method of manufacturing the same. 5,699,956, Cl. 229-92.800.
Breno, Philip J.: *See*—
Maltby, Robert E., Jr.; McMaster, Harold A.; Breno, Philip J.; Buckingham, James W.; and Vild, Michael J., 5,700,306, Cl. 65-182.200.
Breonics Inc.: *See*—
Brasile, Lauren, 5,699,793, Cl. 128-630.000.
Breslow, Ronald; Marks, Paul A.; and Rifkind, Richard A., to Sloan-Kettering Institute for Cancer Research. Potent inducers of terminal differentiation and method of use thereof. 5,700,811, Cl. 514-314.000.
Brewer, James E.; Olson, Kenneth F.; Stolte, John F.; Utke, Nora J.; and Stendahl, Gary B., to SurVivaLink Corporation. Stage and state monitoring automated external defibrillator. 5,700,281, Cl. 607-5.000.
Brickner, Steven J.: *See*—
Hutchinson, Douglas K.; Barbachyn, Michael R.; Brickner, Steven J.; Gammill, Ronald B.; and Patel, Mahesh V., 5,700,799, Cl. 514-235.800.
Bridgestone Corporation: *See*—
Hall, James E., 5,700,888, Cl. 526-190.000.
Takano, Kazuya, 5,700,198, Cl. 464-71.000.
Takeichi, Hideo; Ozawa, Yoichi; Aoki, Sei; and Shimizu, Takashi, 5,700,874, Cl. 525-288.000.
Bridgestone/Firestone, Inc.: *See*—
Davis, James A.; Henegar, Jeffrey W.; and Barham, William F., Jr., 5,700,538, Cl. 428-57.000.
Brigham & Women's Hospital, Inc.: *See*—
Tzianabos, Arthur O.; Onderdonk, Andrew B.; and Kasper, Dennis L., 5,700,787, Cl. 514-54.000.
Brinkerhoff, Ronald J., to Ethicon Endo-Surgery, Inc. Bipolar Scissors. 5,700,261, Cl. 606-41.000.
Bristol-Myers Squibb Company: *See*—
Hanson, Ronald L.; Patel, Ramesh N.; and Szarka, Laszlo J., 5,700,669, Cl. 435-123.000.
British Biotech Pharmaceuticals Limited: *See*—
Dickens, Jonathan Philip; Crimmin, Michael John; and Beckett, Raymond Paul, 5,700,838, Cl. 514-575.000.
British Technology Group Limited: *See*—
Orlowska, Anna Helena; Bradshaw, Thomas William; and Baynham, David Elwyn, 5,701,040, Cl. 310-13.000.
British Telecommunications public limited company: *See*—
Jenkins, Peter D.; and Wettengel, Paul F., 5,699,974, Cl. 242-361.400.
Britschgi, Theresa B.: *See*—
Sheiness, Diana K.; Adams, Trevor H.; Stamm, Michael R.; Cangelosi, Gerard A.; Britschgi, Theresa B.; and Dix, Connie K., 5,700,636, Cl. 435-6.000.
Brocchini, Stephen James: *See*—
Collins, Mark Anthony David; Chicarelli-Robinson, Maria Ines; Bryans, Justin Stephen; Brocchini, Stephen James; Latham, Christopher John; and Shaw, John Richardson, 5,700,804, Cl. 514-255.000.
Brody, Richard S.: *See*—
Hughes, Kenneth E.; Masterson, David C.; Fink, David J.; Metz, Barbara A.; Pickett, Gordon E.; Gemmer, Paul M.; and Brody, Richard S., 5,700,353, Cl. 162-143.000.
Virnelson, Kevin M.; Hughes, Kenneth E.; Masterson, David C.; Fink, David J.; Metz, Barbara A.; Pickett, Gordon E.; Gemmer, Paul M.; and Brody, Richard S., 5,700,354, Cl. 162-143.000.
Broersma, Lester, to Troxel West. Self-contained bicycle helmet and molding process therefor. 5,699,561, Cl. 2-412.000.
Broersma, Rogier, to Diafer B.V. Nestable container. 5,699,914, Cl. 206-517.000.
Brogan, Patrick M.: *See*—
Ring, Martin D.; Mark, Roger; Flanagan, Peter F.; Brogan, Patrick M.; and Sturges, James R., 5,701,277, Cl. 367-163.000.
Brother Kogyo Kabushiki Kaisha: *See*—
Iwasaki, Takeo, 5,701,191, Cl. 359-205.000.
Shimomura, Haruyuki; and Narukawa, Toshiki, 5,701,546, Cl. 395-849.000.
Sugiyama, Wataru, 5,700,095, Cl. 400-55.000.
Broussard, Jerry A.: *See*—
Wang, Tao; and Broussard, Jerry A., 5,700,753, Cl. 502-330.000.
Brown, Daniel Edward, to Oxford Magnet Technology Limited. Cryogenic MRI magnets. 5,701,112, Cl. 335-216.000.
Brown, Daniel R.; and Franz, Patrick J., to In-Control Solutions, Inc. Pointing stick with tripod actuator for cursor control in a computer keyboard. 5,701,142, Cl. 345-168.000.

Brown, Edward J.; Baldasaró, Paul F.; and Dziendziel, Randolph J., to United States of America, Energy. Segregated tandem filter for enhanced conversion efficiency in a thermophotovoltaic energy conversion system. 5,700,332, Cl. 136-253.000.

Brown, Frederick Jeffrey; Russell, Keith; and Warwick, Paul James, Jr., to Zeneca Limited. Methods for using benzoxazines for treating asthma. 5,700,798, Cl. 514-229.800.

Brown, Steve: *See—*

Miller, Derek; Weitkamp, Thomas Edward; and Brown, Steve, 5,699,651, Cl. 53-448.000.

Bruno, Ronald: *See—*

Schuchman, Leonard; and Bruno, Ronald, 5,701,328, Cl. 375-204.000.

Brunson, Kevin K.: *See—*

Reese, George D.; Rich, Albert R., Jr.; and Brunson, Kevin K., 5,699,792, Cl. 128-206.190.

Brunswick Corporation: *See—*

Jones, James R., 5,700,169, Cl. 440-46.000.

Phillips, George E.; Jaszewski, Wayne M.; Griffiths, John M.; and Gessner, Keith W., 5,699,763, Cl. 123-184.210.

Schneider, Charles R., 5,699,750, Cl. 114-357.000.

Brüschke, Hartmut E. A.: *See—*

Steinhauser, Hermann A.; and Brüschke, Hartmut E. A., 5,700,374, Cl. 210-640.000.

Brusic, Vlasta A.: *See—*

Angelopoulos, Marie; Brusic, Vlasta A.; Graham, Teresita Ordonez; Purushothaman, Sampath; Saraf, Ravi F.; Shaw, Jane Margaret; Roldan, Judith Marie; and Viehbeck, Alfred, 5,700,398, Cl. 252-500.000.

Bryan, Thomas E.: *See—*

Phelps, Patricia V.; and Bryan, Thomas E., 5,699,751, Cl. 119-6.800.

Bryans, Justin Stephen: *See—*

Collins, Mark Anthony David; Chicarelli-Robinson, Maria Ines; Bryans, Justin Stephen; Brocchini, Stephen James; Latham, Christopher John; and Shaw, John Richardson, 5,700,804, Cl. 514-255.000.

Bsaibes, Mounir Emile; and Kells, Timothy Roger, to International Business Machines Corporation. System and method for managing arbitrary subsets of access control lists in a computer network. 5,701,458, Cl. 395-609.000.

Bucala, Richard J.; Vlassara, Helen; Cerami, Anthony; and Tracey, Kevin J., to Picowder Institute for Medical Research, The. Methods and materials for the diagnosis and treatment of conditions such as stroke. 5,700,447, Cl. 424-9.100.

Buchholz, Berthold: *See—*

Hurst, Achim; Winkler-Gwienek, Wladis; Buchholz, Berthold; Bendix, Dieter; and Entenmann, Gunther, 5,700,901, Cl. 528-354.000.

Buck Werke GmbH & Co.: *See—*

Rayer, Peter; Wardecki, Norbert; and Raupp, Karl, 5,700,971, Cl. 102-334.000.

Buckingham, James W.: *See—*

Maltby, Robert E., Jr.; McMaster, Harold A.; Breso, Philip J.; Buckingham, James W.; and Vild, Michael J., 5,700,306, Cl. 65-182.200.

Bucks, Rodney R.; Dwyer, Patricia A.; Tombs, Thomas N.; Vreeland, William B.; Zeman, Robert E.; and May, John W., to Eastman Kodak Company. Compliant transfer member having multiple parallel electrodes and method of using. 5,701,567, Cl. 399-302.000.

Buelna, Terrence J.; Noda, Wayne A.; and Lubock, Paul, to C.R. Bard, Inc. Wound closure apparatus and method. 5,700,273, Cl. 606-148.000.

Bühler AG: *See—*

Wettstein, Arthur; and Moret, Gilbert, 5,699,724, Cl. 99-489.000.

Bühler, Jürg; and Müller, Siegfried, to Roche Diagnostic Systems, Inc. Vessel holder for automated analyzer. 5,700,429, Cl. 422-104.000.

Buhler, Steven A.; and Bahramian, Hamid T., to Xerox Corporation. On-chip high frequency damping for laser diode driver chips. 5,701,060, Cl. 315-227.00R.

Bui, Loc V.: *See—*

Banning, Jeffery H.; and Bui, Loc V., 5,700,851, Cl. 523-161.000.

Buijs, Wim: *See—*

Wolters, Henricus F. W.; Lane, Samuel L.; Buijs, Wim; Haasen, Nicolaas F.; and Herkes, Frank E., 5,700,934, Cl. 540-538.000.

Bulk Chemicals, Inc.: *See—*

Petrole, Anthony P.; and Rivera, José B., 5,700,523, Cl. 427-397.800.

Bull HN Information Systems Italia S.p.A.: *See—*

Zulian, Ferruccio; Ramolini, Angelo; Bagnoli, Carlo; and Lazzari, Angelo, 5,701,413, Cl. 395-200.020.

Bull Information Systems Inc.: *See—*

Ryan, Charles P., 5,701,426, Cl. 395-403.000.

Bullard, Larry I.; Sigmon, Allen; and Tornero, Roger, to Leggett and Platt, Inc. Seating suspension assembly. 5,700,060, Cl. 297-452.630.

Bullock, Donald L.: *See—*

Yu, David U. L.; and Bullock, Donald L., 5,701,317, Cl. 372-5.000.

Bulucea, Constantin; and Blanchard, Richard A., to National Semiconductor Corporation. Insulated gate semiconductor device typically having subsurface-peaked portion of body region for improved ruggedness. 5,701,023, Cl. 257-341.000.

Bulmschek, Bruno, to E. Kertscher S.A. Stranding station for reverse lay or SZ type stranding machine. 5,699,660, Cl. 57-293.000.

Bundy Corporation: *See—*

Kujawski, Rick A., 5,700,040, Cl. 285-319.000.

Bunge Foods Corporation: *See—*

Wallin, Glenn, 5,700,511, Cl. 426-549.000.

Bunin, Grigoriy: *See—*

Grois, Igor; Makhlin, Ilya; Bunin, Grigoriy; and Pescetto, Michael J., 5,701,382, Cl. 385-140.000.

Burchard, Thomas H.; Hunter, Gregory; Johnson, Kevin M.; Karg, Jeffery; and Bertrand, John E., to Moen Incorporated. Faucet water input connection. 5,699,832, Cl. 137-614.200.

Burger, Erich: *See—*

Schnorrenberg, Gerd; Esser, Franz; Dollinger, Horst; Jung, Birgit; Speck, Georg; and Burger, Erich, 5,700,827, Cl. 514-414.000.

Burger, Joerg. Device for washing vehicles. 5,699,579, Cl. 15-230.140.

Burger, Karl: *See—*

Schliesser, Gerhard; and Burger, Karl, 5,699,723, Cl. 99-443.00C.

Burks, Warren: *See—*

Leyen, Thomas; Sheldrup, Ronald; Burks, Warren; and Macias, Moises, 5,701,338, Cl. 379-58.000.

Burnham, Martin Karl Russell: *See—*

Hodgson, John Edward; and Burnham, Martin Karl Russell, 5,700,928, Cl. 536-23.700.

Burns, David M.: *See—*

Dreyer, John F., Jr.; Bradshaw, Thomas I.; Burns, David M.; Pavelka, Lee A.; and Orensteen, Bruce D., 5,700,077, Cl. 362-32.000.

Burns, James A., to Becton, Dickinson and Company. Combination stopper-shield closure. 5,699,923, Cl. 215-247.000.

Burns, James F.; Dailey, Michael J.; and Deming, Scott W., to Corning Incorporated. Non-damaging flatness and thickness gauge for glass. 5,701,178, Cl. 356-371.000.

Burris, Kenneth W.: *See—*

Dam, Chuong Q.; Hafner, Gregory G.; and Burris, Kenneth W., 5,700,094, Cl. 384-569.000.

Burroughes, Jeremy H.; and Arnone, Donald D., to Kabushiki Kaisha Toshiba. Semiconductor device and method for its manufacture. 5,701,016, Cl. 257-24.000.

Burroughes, Jeremy H.: *See—*

Patel, Nalin K.; and Burroughes, Jeremy H., 5,701,017, Cl. 257-27.000.

Buse, Henry: *See—*

Focke, Heinz; and Buse, Henry, 5,699,903, Cl. 206-268.000.

Busey, Hugh W.: *See—*

Combs, Jerome T.; Busey, Hugh W.; and Ukraincik, Kresimir, 5,699,809, Cl. 128-746.000.

Bussard, John Rudell; and Yurko, Garold Michael, to Whitaker Corporation, The. Electrical connector with wire restraint. 5,700,156, Cl. 439-471.000.

Busznyák, Imre: *See—*

Alesz, József; Busznyák, Imre; Glódi, István; Kiss, András; Kukta, Józsefné; Nagy, Béla; Salamon, Péter; Szentpétery, Elemér; Tóth, Zoltán; and Ujhelyi, Tamás, 5,700,957, Cl. 73-861.357.

Butryn, Joseph A.: *See—*

Do, Cuong D.; Ha, Nhut T.; and Butryn, Joseph A., 5,701,231, Cl. 361-683.000.

Byler, Richard K.: *See—*

Anthony, William S.; and Byler, Richard K., 5,700,961, Cl. 73-866.000.

C.C. Leatherbury, Inc.: *See—*

Leatherbury, Colin C.; and Kerr, Donavan O., 5,700,021, Cl. 280-47.350.

C.H. & I. Technologies, Inc.: *See—*

Clark, James E., II, 5,699,940, Cl. 222-394.000.

C.R. Bard, Inc.: *See—*

Buelna, Terrence J.; Noda, Wayne A.; and Lubock, Paul, 5,700,273, Cl. 606-148.000.

C.S.P. Diffusion, société anonyme: *See—*

Pouat, Christian, 5,699,814, Cl. 132-277.000.

Cabot Corporation: *See—*

Chung, Bin; Mackay, Bruce E.; and Podobnik, Ivan Zlatko, 5,700,845, Cl. 521-99.000.

Cadien, Kenneth C.: *See—*

Feller, A. Daniel; and Cadien, Kenneth C., 5,700,383, Cl. 216-88.000.

Cahajla, Janice. Litter box. 5,699,754, Cl. 119-166.000.

Calcagni, Peter L.: *See—*

Huspeka, John A.; and Calcagni, Peter L., 5,699,959, Cl. 229-125.260.

Calcomp, Inc.: *See—*

Schmenk, Steven R.; and Beauvais, Donald A., 5,701,141, Cl. 345-157.000.

Calderwood, Mitchell C. Surgical or clinical lamp handle shield or prophylactic. 5,700,085, Cl. 362-399.000.

Caldwell, Carol A.: *See—*

Logue, Daniel R.; Van Emmerik, Piet T.; Mann, Roger H.; Sun, Edward I.; Avalon, Gary A.; Caldwell, Carol A.; Chang, Eng-Pi; and Huskey, Richard A., 5,700,571, Cl. 428-352.000.

Caldwell, Robert Mark: *See—*

Bott, Richard Ray; Caldwell, Robert Mark; Cunningham, Brian C.; Estell, David Aaron; Power, Scott Douglas; and Wells, James Allen, 5,700,676, Cl. 435-221.000.

Calgon Carbon Corporation: *See—*

Doughty, David T.; Hayden, Richard A.; Cobes, John W., III; and Matviya, Thomas M., 5,700,436, Cl. 423-210.000.

Calgon Corporation: *See—*

Stinavage, Paul, 5,700,834, Cl. 514-526.000.

Calligaro, Cristiano; Daniele, Vincenzo; Gastaldi, Roberto; Manstretta, Alessandro; and Torelli, Guido, to SGS-Thomson Microelectronics S.r.l. Serial dichotomic method for sensing multiple-level non-volatile memory cells, and sensing circuit implementing such method. 5,701,265, Cl. 365-185.030.

Calnek, David S.; and Grinnell, Brian W., to Eli Lilly and Company. Methods of increasing thrombomodulin expression. 5,700,815, Cl. 514-324.000.

Calvin, Joel R.: *See—*

McAteer, Colin H.; Davis, Robert D., Sr.; and Calvin, Joel R., 5,700,942, Cl. 546-181.000.

Cambridge Industries, Inc.: *See—*

Gonas, Albert J., 5,700,050, Cl. 296-189.000.

Camco Drilling Group Limited: *See—*

Caraway, Douglas; Watson, Graham; and Newton, T. Alex, 5,699,868, Cl. 175-339.000.

Cameron, Scott Warren; and de La Soujeole, Axel Alegre, to SGS-Thomson Microelectronics, Inc. Symmetrical resistive transducer biasing circuit and method. 5,701,213, Cl. 360-66.000.

Campbell, Carey V.: *See—*

Myers, David J.; Lewis, James D.; and Campbell, Carey V., 5,700,287, Cl. 623-1.000.

Campbell Hausfeld/Scott Fetzer Co.: *See—*

Conatser, Roger; and Jarboe, Victor R., 5,699,967, Cl. 239-526.000.

Campbell, Robert L., Jr., to Automated Solutions, LLC. High speed sheet material cutter and method of using same. 5,699,707, Cl. 83-100.000.

Canada, Her Majesty the Queen in right of, as represented by the Minister of National Defence: *See—*

Ho, Jim Yew-Wah, 5,701,012, Cl. 250-461.200.

Canal, Tiziana; Lovrecich, Mara Lucia; and Carli, Fabio, to Vectorpharma International S.p.A. Pharmaceutical compositions in the form of particles suitable for the controlled release of pharmacologically active substances and process for preparing the same compositions. 5,700,486, Cl. 424-501.000.

Canedy, Thomas. Electronic curb feeler. 5,701,122, Cl. 340-932.200.

Canela, Heriberto. Drinking container with dosage dispenser. 5,699,937, Cl. 222-129.000.

Canfield, Stephen L.; Reinholtz, Charles F.; Salerno, Robert J.; and Ganino, Anthony J., to Virginia Tech Intellectual Properties, Inc. Spatial, parallel-architecture robotic carpal wrist. 5,699,695, Cl. 74-490.060.

Cangelosi, Gerard A.: *See—*

Sheiness, Diana K.; Adams, Trevor H.; Stamm, Michael R.; Cangelosi, Gerard A.; Britschgi, Theresa B.; and Dix, Connie K., 5,700,636, Cl. 435-6.000.

Canon Information Systems, Inc.: *See—*

Ostromoukhov, Victor; and Nehab, Smadar, 5,701,366, Cl. 382-237.000.

Tran, Duc; Wadsworth, Robert D.; Ip, Tony K.; and Russell, William C., 5,701,411, Cl. 395-200.100.

Canon Kabishiki Kaisha: *See—*

Nozawa, Minoru, 5,701,147, Cl. 347-58.000.

Canon Kabushiki Kaisha: *See—*

Akiyama, Yuji; Hirabayashi, Hiromitsu; Nagoshi, Shigeyasu; Arai, Atsushi; Kurata, Tetsuji; Sugimoto, Hitoshi; and Matsubara, Miyuki, 5,701,146, Cl. 347-26.000.

Akutsu, Kotaro; Osanai, Eiji; and Kamata, Shigeto, 5,701,041, Cl. 310-12.000.

Amamiya, Syoji; Maruyama, Akio; and Hashimoto, Yuichi, 5,701,571, Cl. 399-343.000.

Amano, Kenichiro, 5,701,539, Cl. 396-515.000.

Araki, Ryuji; Kubota, Atsushi; Sasaki, Shinichi; and Miura, Koji, 5,701,562, Cl. 399-265.000.

Aratani, Shuntaro; Ohshima, Masamichi; and Suga, Kazumi, 5,701,135, Cl. 345-89.000.

Hiroshima, Koichi; Nishimura, Katsuhiko; Kosaka, Toru; and Yoda, Yasuo, 5,701,568, Cl. 399-302.000.

Honda, Takao; Yanagida, Makoto; Arahira, Fumihiro; and Yamamoto, Takeo, 5,701,551, Cl. 399-50.000.

Hori, Kenjiro; Akiyama, Satoshi; Takubo, Takefumi; and Kishida, Tetsuo, 5,701,182, Cl. 358-296.000.

Hosaka, Masao; Kimura, Yoshimasa; and Sakamaki, Hisashi, 5,701,481, Cl. 395-676.000.

Hoshi, Hiroaki; Matsumura, Susumu; Yamamoto, Masakuni; and Yamaguchi, Eiji, 5,701,279, Cl. 369-13.000.

Ishiwata, Kazuya; Watanabe, Yasuyuki; Nishida, Naoya; and Unno, Akira, 5,701,544, Cl. 396-609.000.

Ishizawa, Yasuhisa, 5,701,512, Cl. 395-821.000.

Kasuya, Takashige; Tamura, Osamu; Yusa, Hiroshi; Kobori, Takakuni; and Katada, Masaichiro, 5,700,616, Cl. 430-110.000.

Kato, Katsuhito; and Adachi, Seiichiro, 5,700,002, Cl. 270-58.120.

Kato, Takashi; Tokumitsu, Jun; and Suda, Shigeyuki, 5,701,157, Cl. [illegible]

Kojima, Hisayoshi, 5,701,558, Cl. 399-103.000.

Kurbayashi, Yutaka; Shirota, Katsuhiro; and Takahashi, Katsuhiko, 5,700,314, Cl. 106-31.270.

Miyamoto, Kazuki; Ohki, Naoyuki; Nakano, Masaki; Ushiro, Takahiro; Fukazu, Yasuo; Chaki, Atsushi; Takata, Shinichi; and Ohyoshi, Kazuhiro, 5,701,402, Cl. 395-115.000.

Miyashita, Akira, 5,701,280, Cl. 369-13.000.

Miyazaki, Takeshi; Tanaka, Kazumi; Santo, Tsuyoshi; Ohnishi, Toshikazu; Fukui, Tetsuro; and Okamoto, Tadashi, 5,700,647, Cl. 433-6.000.

Ninomiya, Takayuki, 5,701,145, Cl. 347-23.000.

Ouchi, Toshihiko; Sakata, Hajime; Ohguri, Noriaki; and Uchida, Mamoru, 5,701,325, Cl. 372-96.000.

Sekiya, Harukazu; Saito, Jun; Isoda, Yuzo; Uchida, Yasuhiro; Izumi, Makoto; and Kuwata, Takashi, 5,700,006, Cl. 271-241.000.

Sugawara, Saburo, 5,701,475, Cl. 359-644.000.

Takatsu, Kazumasa; Kurokawa, Takashi; Echizen, Hiroshi; Koganei, Akio; Sugiyama, Shuichiro; and Adachi, Toshio, 5,700,326, Cl. 118-723.0MW.

Takiguchi, Tsuyoshi; Okado, Kenji; Taya, Masaaki; Fujita, Ryoichi; Kanbayashi, Makoto; Iida, Wakashi; and Ida, Tetsuya, 5,700,617, Cl. 430-110.000.

Wadsworth, Robert D.; and Dunkaick, Daniel A., 5,701,492, Cl. 395-712.000.

Wakui, Tetsuya, 5,701,344, Cl. 381-1.000.

Yamada, Masakatsu; Yokoyama, Minoru; and Kohno, Takeshi, 5,701,547, Cl. 399-1.000.

Yamamoto, Keisuke; and Komatsu, Toshiyuki, 5,700,443, Cl. 423-647.700.

Yoshioka, Hitoshi, 5,701,169, Cl. 355-30.000.

Yuzurihara, Hiroshi; Inoue, Shunsuke; Miyawaki, Mamoru; and Matsumoto, Shigeyuki, 5,700,719, Cl. 437-193.000.

Capanna, Michael: *See—*

Schaefer, Roger W.; Capanna, Michael; and Scott, James D., 5,699,943, Cl. 224-197.000.

Capelle, Jean-Yves; Desaulty, Michel André Albert; and Le Letty, Eric Charles Louis, to Societe Nationale d'Etude et de Construction de Moteurs d'Aviation "SNECMA". Method of preventing instabilities produced by combustion in a turbojet engine. 5,699,663, Cl. 60-204.000.

Capson, Brian; Cherry, Wes; Devaan, Jon; Duncan, Chris; Fowkes, Raymond E.; Graham, Christopher E.; James, Lisa R.; and McGuire, Timothy W., Jr., to Microsoft Corporation. Method and system for automatically entering a data series into contiguous cells of an electronic spreadsheet program or the like. 5,701,499, Cl. 395-764.000.

Caraway, Douglas; Watson, Graham; and Newton, T. Alex, to Camco Drilling Group Limited. Rotary drill bits having nozzles to enhance recirculation. 5,699,868, Cl. 175-339.000.

Carden, Robin A., to Alyn Corporation. Metal matrix compositions for neutron shielding applications. 5,700,962, Cl. 75-236.000.

Cardiac Pacemakers, Inc.: *See—*

Salo, Rodney W., 5,700,283, Cl. 607-17.000.

CaRDiMa, Inc.: *See—*

Littmann, Laszlo; Lau, Liming; and Amirana, Omar, 5,699,796, Cl. 128-642.000.

Cardona, Alfred M. Martial arts training device. 5,700,230, Cl. 482-83.000.

Carl Zeiss JENA GmbH: *See—*

Schöppe, Günter, 5,701,198, Cl. 359-386.000.

Carli, Fabio: *See—*

Canal, Tiziana; Lovrecich, Mara Lucia; and Carli, Fabio, 5,700,486, Cl. 424-501.000.

Carlson, David K.: *See—*

Beinglass, Israel; and Carlson, David K., 5,700,520, Cl. 427-255.100.

Carlson, Leon, to CMA/Microdialuysis Research AB. Fluorescence detector, and a device for supporting a replacable sample cuvette in a fluorescence detector. 5,700,428, Cl. 422-82.080.

Carmien, Joseph Allen. Hand tool and process for manufacturing same. 5,699,700, Cl. 76-113.000.

Carnaudmetalbox (Holdings) USA Inc.: *See—*

Claydon, Paul Charles; and Ramsey, Christopher Paul, 5,699,932, Cl. 220-671.000.

van den Akker, Richard Henry; Baverstock, Nigel; and Gibbs, Roy Thomas, 5,699,654, Cl. 53-478.000.

Carodiskey, Thomas J., to Emerson Electric Co. Method of performing ultrasonic examination. 5,699,803, Cl. 128-660.010.

Caron, Connie: *See—*

Voss, Jeffrey W.; and Caron, Connie, 5,700,640, Cl. 435-6.000.

Carpenter, Bernie F.: *See—*

Jacobs, Jack H.; Thomas, Matthew M.; Grosskrueger, Duane D.; Carpenter, Bernie F.; and Perry, Alan R., 5,700,337, Cl. 156-64.000.

Carpenter, Peter R., to Cirrus Logic, Inc. Pipelined alignment shifter and method for universal bit field boundary alignment. 5,701,517, Cl. 395-[illegible]

Carpenter, Roland K. Method and apparatus for magnetically treating flowing liquids. 5,700,376, Cl. 210-695.000.

Carpenter, Roy B., Jr., to Lightning Eliminators & Consultants, Inc. Personal safety system. 5,699,818, Cl. 135-16.000.

Carr, Albert A.; Kane, John M.; and Hay, David A., to Merrell Pharmaceuticals Inc. (+)-α-(2,3-dimethoxyphenyl)-1-[2-(4-fluorophenyl)ethyl]-4-piperidinemethanol. 5,700,812, Cl. 514-317.000.

Carr, Albert A.; Kane, John M.; and Hay, David A., to Merrell Pharmaceuticals Inc. (+)-α-(2,3-dimethoxyphenyl)-1-[2-(4-fluorophenyl)ethyl]-4-piperidinemethanol. 5,700,813, Cl. 514-317.000.

Carroll, George H. Artificial fingernail with inlay. 5,699,813, Cl. 132-73.000.

Carroll, Phillip Patrick, III: *See—*

Audi, Richard Francois; Smith, Donald Scott; Carroll, Phillip Patrick, III; and Rossi, Michael Anthony, 5,700,545, Cl. 428-131.000.

Carsello, Steve: *See—*

Wetters, John; Simmons, John Wayne; Fernandez, Virgilio Alejandro; Ahrens, Art; and Carsello, Steve, 5,701,600, Cl. 455-208.000.

Carson, David: *See—*

Nizar, P. K.; and Carson, David, 5,701,496, Cl. 395-739.000.

Carson, John C.; DeCaro, Robert E.; Hsu, Ying; and Miyake, Michael K., to Irvine Sensors Corporation. Stackable modules and multimodular assemblies. 5,701,233, Cl. 361-735.000.

Caruel, Jacques E. J.: *See—*

Barbot, André M.; Caruel, Jacques E. J.; and Soligny, Marcel R., 5,700,130, Cl. 416-95.000.

Casio Computer Co., Ltd.: *See—*
Aihara, Fumikazu, 5,701,599, Cl. 455-186.100.
Yamane, Kazuyasu; and Orimoto, Takashi, 5,701,580, Cl. 455-3.100.
Castelli, Francesco; and Invernizzi, Gianpiero, to Reeves Brothers, Inc. Preparation of cylindrical blanket by spreading of compressible layer. 5,700,343, Cl. 156-295.000.
Castle, Brian R.; Scott, James J.; and Oldsen, John G., to Jennmar Corporation. Combination cable spreader and cable driver. 5,699,572, Cl. 7-138.000.
Castonguay, Roger N.; and Lord, Jeffrey D., to General Electric Company. Electronic trip unit conversion kit for high ampere-rated circuit breakers. 5,701,111, Cl. 335-177.000.
Castro, Ramon Salcido. Integral system for the manufacture of cushioned shoes. 5,699,627, Cl. 36-28.000.
Catallo, Giulio; Cihlar, Joe V.; and Lubbock, Maurice P. G., to Inliner, U.S.A. Apparatus for vacuum impregnation of a flexible, hollow tube. 5,699,838, Cl. 141-65.000.
Caterino, Garret J.; Hopkins, Patrick W.; and Strizhak, Elliott S., to Polaroid Corporation. Camera encoder assembly, system and method thereof. 5,701,525, Cl. 396-132.000.
Caterpillar Inc.: *See—*
Clarke, John M., 5,699,758, Cl. 123-21.000.
Dam, Chuong Q.; Hafner, Gregory G.; and Burris, Kenneth W., 5,700,094, Cl. 384-569.000.
Marchand, Jean-Louis; Palomera, Michel; Peeters, Michel; and Salomon, Jean-Paul, 5,700,384, Cl. 219-69.120.
Catherine Dunn, Alice, independent administratrix: *See—*
Chong, Ku Ho; Crockett, Charles Hayden, Jr.; Dunn, Stephen Alan, deceased; Hoebener, Karl Grant; and McMaster, Michael George, 5,699,613, Cl. 29-852.000.
Caulder, Jerry; Crowley, R. Hugh; Zorner, Paul S.; and Evans, Steven L., to Mycogen Corporation. Process and composition for controlling weeds comprising a C_7–C_{20} monocarboxylic acid and a second herbicide. 5,700,759, Cl. 504-133.000.
Cauwet, Daniele: *See—*
Dubief, Claude; and Cauwet, Daniele, 5,700,456, Cl. 424-70.170.
Cavaliere, William Albert: *See—*
Wu, Jin Jwang; Cavaliere, William Albert; Nodum, James Patrick; and Schmitz, Stefan, 5,699,679, Cl. 62-617.000.
Cavallo, Giorgio; Giovanelli, Gian Luca; and Martinis, Marco, to Vigel S.p.A. Process and machine for parting the cap of connecting rods, particularly connecting rods for internal-combustion engines. 5,699,947, Cl. 225-101.000.
Caviness, Tony F., to Waverly Mills, Inc. Process for producing substantially all-polyester yarns from fine denier feed fibers on an open end spinning machine. 5,699,659, Cl. 57-245.000.
Cecere, Michael A.: *See—*
Ximen, Hongyu; Cecere, Michael A.; and Masnaghetti, Douglas, 5,700,526, Cl. 427-527.000.
Celeste, Anthony J.: *See—*
Wozney, John M.; and Celeste, Anthony J., 5,700,911, Cl. 530-350.000.
Celi, Antonio Maria. Device for the pretreatment of electronic scrap. 5,700,425, Cl. 266-145.000.
Cellstar, Ltd.: *See—*
Richardson, Rebecca Kimbrell, 5,699,913, Cl. 206-470.000.
Central Synthetic Rubbers Research Institute, The: *See—*
Yamamoto, Yuichi; Tatsu, Haruyoshi; Alexeevna, Volkova Margarita; Vasilyevich, Sokolov Sergey; and Vladimirovich, Veretennikov Nikolai, 5,700,879, Cl. 525-353.000.
Centre National de la Recherche Scientifique: *See—*
Sanchez, Jean-Yves; Alloin, Fannie; and Masson, Jacqueline, 5,700,880, Cl. 525-403.000.
Centurion Safety Products, Inc.: *See—*
Schaefer, Roger W.; Capanna, Michael; and Scott, James D., 5,699,943, Cl. 224-197.000.
Ceramaspeed Limited: *See—*
McWilliams, Joseph Anthony, 5,699,606, Cl. 29-611.000.
Cerami, Anthony: *See—*
Bucala, Richard J.; Vlassara, Helen; Cerami, Anthony; and Tracey, Kevin J., 5,700,447, Cl. 424-9.100.
Wolpe, Stephen D.; and Cerami, Anthony, 5,700,466, Cl. 424-145.100.
Cerestar Holding B.V.: *See—*
Gonze, Michel Henri André; Van Der Schueren, Freddy Maurits Luc; and Rapaille, André Léon Ivon, 5,700,514, Cl. 426-660.000.
Chace, Mark S.: *See—*
Sachdev, Krishna G.; Berger, Michael; and Chace, Mark S., 5,700,581, Cl. 428-447.000.
Chaki, Atsushi: *See—*
Miyamoto, Kazuki; Ohki, Naoyuki; Nakano, Masaki; Ushiro, Takahiro; Fukazu, Yasuo; Chaki, Atsushi; Takata, Shinichi; and Ohyoshi, Kazuhiro, 5,701,402, Cl. 395-115.000.
Chakrabarti, Ranjan: *See—*
Vyas, Krishnamurthi; Prabhakar, Chebiyyam; Rao, Sreenivas Dharmaraja; Sarma, Mamillapalli Ramabadhra; Reddy, Om Gaddam; Ramanujam, Rajagopalan; and Chakrabarti, Ranjan, 5,700,820, Cl. 514-369.000.
Chan, Andy D. C.; Boden, Mark W.; Benco, John S.; Bergquist, Robert A.; and Orvedahl, Donna S., to Chiron Diagnostics Corporation. Fluoroelastomer gasket for blood sensors. 5,700,360, Cl. 204-400.000.
Chance, Ronald E.; DiMarchi, Richard D.; Frank, Bruce H.; and Shields, James E., to Eli Lilly and Company. Process for preparing insulin analogs. 5,700,662, Cl. 435-69.400.
Chandross, Edwin Arthur; Galvin-Donoghue, Mary Ellen; and Papadimitrakopoulos, Fotios, to Lucent Technologies Inc. Method for preparation of conjugated arylene or heteroarylene vinylene polymer and device including same. 5,700,696, Cl. 437-1.000.
Chang, De-An; and Lu, Jin-Yuh, to Industrial Technology Research Institute. Screen printing on film coated substrates. 5,699,733, Cl. 101-129.000.
Chang, Eng-Pi: *See—*
Logue, Daniel R.; Van Emmerik, Piet T.; Mann, Roger H.; Sun, Edward I.; Avalon, Gary A.; Caldwell, Carol A.; Chang, Eng-Pi; and Huskey, Richard A., 5,700,571, Cl. 428-352.000.
Chang, Henry: *See—*
Rubin, Gerry; Therrien, Marc; Chang, Henry; Karim, Felix; and Wassarman, David, 5,700,675, Cl. 435-194.000.
Chang, Philip Yen-Tang: *See—*
Baugher, Mark John; Chang, Philip Yen-Tang; Morris, Gregory Lynn; and Stephens, Alan Palmer, 5,701,465, Cl. 395-610.000.
Chang, Thomas: *See—*
Hsia, Liang-Choo; and Chang, Thomas, 5,701,013, Cl. 250-491.100.
Chang, Tsun-Tsai: *See—*
Hsu, Chen-Chung; Chang, Tsun-Tsai; and Lin, Larry, 5,700,711, Cl. 437-60.000.
Chang, William I-Wei: *See—*
Marr, Thomas G.; and Chang, William I-Wei, 5,701,256, Cl. 364-496.000.
Channell, Alan B.; and Shears, Terry S., to Chemical Engineering Corporation. Tank assembly and method for water treatment. 5,699,930, Cl. 220-465.000.
Chapman, Benjamin Edgar; and Creedon, Michael Timothy, to Procter & Gamble Company, The. Process for making soil release polymer granules. 5,700,386, Cl. 252-8.620.
Chartered Semiconductor Manufacturing Pte Ltd.: *See—*
Lee, Hsiao-Lun Bob, 5,700,707, Cl. 437-52.000.
Chass, Jacob. Rotary variable differential transformers. 5,701,114, Cl. 336-115.000.
Chatterjee, Chanchal, to Medar, Inc. Method and system for measuring dimensions of an edge of a part. 5,701,179, Cl. 356-376.000.
Chatterjee, Dilip K.: *See—*
Furlani, Edward P.; Chatterjee, Dilip K.; and Ghosh, Syamal K., 5,700,411, Cl. 264-125.000.
Chauffard, Francoise; Enslen, Mark Y. A.; and Tachon, Pierre, to Nestec S.A. Sustained release microparticulate caffeine formulation. 5,700,484, Cl. 424-496.000.
Cheil Jedang Co.: *See—*
Lee, Kwang Hyuk; Choi, Seung Sub; and Yoon, Myeong Sik, 5,700,932, Cl. 540-223.000.
Chejlava, Edward John, Jr., to Cirrus Logic, Inc. Method and apparatus for master boot record shadowing. 5,701,477, Cl. 395-652.000.
Chem Financial, Inc.: *See—*
Ogier, Ray; and O'Donnell, Garry, 5,699,730, Cl. 100-233.000.
Chemadd Limited: *See—*
Ahmed, Syed Habib, 5,700,301, Cl. 44-412.000.
Chemetals Technology Incorporated: *See—*
Goyette, William J.; and Keenan, Francis J., 5,700,439, Cl. 423-230.000.
Chemetics International Company Ltd.: *See—*
Guo, Ruijin, 5,700,350, Cl. 162-29.000.
Chemical Engineering Corporation: *See—*
Channell, Alan B.; and Shears, Terry S., 5,699,930, Cl. 220-465.000.
Chen, Chien-Feng; and Wang, Huan Wen, to Taiwan Semiconductor Manufacturing Company Ltd. Prevention of corrosion of aluminum interconnects by removing corrosion-inducing species. 5,700,740, Cl. 438-710.000.
Chen, Gwo Chyuan: *See—*
Liang, Andrew; Cheng, Lilian; and Chen, Gwo Chyuan, 5,701,230, Cl. 361-681.000.
Chen, Howard Zehua, to Lucent Technologies Inc. Arrangement for billing interactive communication services. 5,701,152, Cl. 348-3.000.
Chen, Hsi-Min, to Must Systems Inc. Apparatus for controlling sheet feed-out from an automatic sheet feeder into a receiving tray. 5,700,005, Cl. 271-188.000.
Chen, Hun-yuan: *See—*
Chen, Shen-fa, 5,699,556, Cl. 2-9.000.
Chen, Hwi-Huang; and Hong, Gary, to United Microelectronics Corporation. Process for fabricating storage capacitor for DRAM memory cell. 5,700,708, Cl. 437-52.000.
Chen, Janglin: *See—*
Grace, Jeremy; Gerenser, Louis J.; Chen, Janglin; and Riecke, Edgar E., 5,700,577, Cl. 422-420.000.
Chen, Kuan-Chou: *See—*
Shyr, Duen-Jyh; and Chen, Kuan-Chou, 5,699,892, Cl. 198-370.090.
Chen, Shen-fa, to Chen, Hun-yuan. Catcher's face mask with a sun-shade. 5,699,556, Cl. 2-9.000.
Chen, Shun-fu, to Chia Yi Enterprises Co. Pocket-knife. 5,699,615, Cl. 30-160.000.
Chen, Shun-Long: *See—*
Yeh, Ching Hua; and Chen, Shun-Long, 5,701,174, Cl. 356-237.000.
Chen, Yi-Rong, to Brasil International (Taiwan) Corp. Computer control device for use with a TV game machine allowing BIOS program execution from TV game processor address space. 5,701,478, Cl. 395-652.000.
Cheng, Lilian: *See—*

Liang, Andrew; Cheng, Lilian; and Chen, Gwo Chyuan, 5,701,230, Cl. 361-681.000.
Cheng, Viktor Choong-Hung: *See—*
Yong, Dennis; Cheng, Viktor Choong-Hung; Lim, Liat; and Tay, Siew Choon, 5,701,466, Cl. 395-611.000.
Cheng, Yihao: *See—*
Duck, Gary S.; Cheng, Yihao; and Abe, Koichi, 5,701,375, Cl. 385-74.000.
Cheng, Yiu-Wah Eric; Du, Wei-Jen Jim; and Huang, Shou-Yuan Richard, to Motorola, Inc. Controller for selective call receiver having memory for storing control information, plurality of addresses, status information, receive address information, and message. 5,701,414, Cl. 395-200.090.
Cheng, Yu-Ping; and Hitz, David, to Auspex Systems, Inc. High-performance non-volatile RAM protected write cache accelerator system employing DMA and data transferring scheme. 5,701,516, Cl. 395-842.000.
Cherng, Meng-Jaw: *See—*
Lin, John C. H.; Lee, Daniel Hao-Tien; and Cherng, Meng-Jaw, 5,700,731, Cl. 438-381.000.
Cherry, Wes: *See—*
Capson, Brian; Cherry, Wes; Devaan, Jon; Duncan, Chris; Fowkes, Raymond E.; Graham, Christopher E.; James, Lisa R.; and McGuire, Timothy W., Jr., 5,701,499, Cl. 395-764.000.
Cherylann Company: *See—*
Banes, Cheryl Ann; and Born, Joseph, 5,699,816, Cl. 132-285.000.
Cheyenne Advanced Technology Limited: *See—*
Malcolm, Peter Bryan, 5,701,463, Cl. 395-610.000.
Chi, Chi-Hung, to Philips Electronics North America Corporation. Instruction cache system for implementing programs having non-sequential instructions and method of implementing same. 5,701,435, Cl. 395-486.000.
Chi, Chong I.: *See—*
Fisher, Gregory J.; and Chi, Chong I., 5,701,097, Cl. 327-538.000.
Chia Yi Enterprises Co.: *See—*
Chen, Shun-fu, 5,699,615, Cl. 30-160.000.
Chiang, An-Min; and Yeh, Wei-Kun, to Taiwan Semiconductor Manufacturing Company Ltd. Method of multi-step reactive ion etch for patterning adjoining semiconductor metallization layers. 5,700,739, Cl. 438-655.000.
Chiaphua Industries Limited: *See—*
Yung, Jimmy Siu Yim; and McNair, John Duncan, 5,699,718, Cl. 99-292.000.
Chiba, Shizuo: *See—*
Ogura, Masatsune; Chiba, Shizuo; and Ohtera, Kayoko, 5,700,859, Cl. 524-314.000.
Chicarelli-Robinson, Maria Ines: *See—*
Collins, Mark Anthony David; Chicarelli-Robinson, Maria Ines; Bryans, Justin Stephen; Brocchini, Stephen James; Latham, Christopher John; and Shaw, John Richardson, 5,700,804, Cl. 514-255.000.
Chieap, Ping-Lien: *See—*
Ho, Kuo-Ping; and Chieap, Ping-Lien, 5,699,933, Cl. 220-703.000.
Chikagawa, Osamu: *See—*
Fujii, Takashi; Shinmura, Satoru; Fujino, Masaru; Mizuno, Shinobu; Sekijima, Takenori; Chikagawa, Osamu; and Takagi, Hiroshi, 5,701,108, Cl. 333-202.000.
Chikama, Terumi, to Fujitsu Limited. Light signal reception apparatus having an improved light surge eliminating function. 5,701,195, Cl. 359-341.000.
Chikamori, Akira; and Yasuhara, Shinji, to Koyo Machine Industries Co., Ltd.; and Koyo Seiko Co., Ltd. Speed-increasing spindle device. 5,700,115, Cl. 408-126.000.
Children's Medical Center Corporation: *See—*
Berde, Charles B.; and Langer, Robert S., 5,700,485, Cl. 424-501.000.
Zon, Leonard; and Richardson, Paul, 5,700,927, Cl. 536-23.500.
China Textile Institute: *See—*
Hsiung, Han-Hsing; Chiou, Hsin-Hsiung; and Chiu, Sheng-Fu, 5,699,588, Cl. 19-66.00R.
Chintyan, James Robert: *See—*
Lippmann, Raymond; Schnars, Michael John; Nelson, James Edward; and Chintyan, James Robert, 5,701,330, Cl. 375-257.000.
Chiou, Hsin-Hsiung: *See—*
Hsiung, Han-Hsing; Chiou, Hsin-Hsiung; and Chiu, Sheng-Fu, 5,699,588, Cl. 19-66.00R.
Chiou, Joseph J., to Highland Industries, Inc. Stable silicone coated fabric without adhesion promoter. 5,700,532, Cl. 428-36.100.
Chiron Diagnostics Corporation: *See—*
Chan, Andy D. C.; Boden, Mark W.; Benco, John S.; Bergquist, Robert A.; and Orvedahl, Donna S., 5,700,360, Cl. 204-400.000.
Chisholm, Thomas J.; Richard, Gary; and Rysin, Alexander, to Computer Identics Corporation. Intensity compensated scanning system. 5,701,003, Cl. 250-205.000.
Chisso Corporation: *See—*
Inui, Kanichiro; and Oshima, Shunji, 5,700,754, Cl. 502-340.000.
Iwata, Masuo; Seki, Mika; Inoue, Kouji; Takahashi, Ryoji; Fukumura, Tikashi; and Tanaka, Masaya, 5,700,575, Cl. 428-403.000.
Chiu, Chung-Wai; Jeffcoat, Roger; Henley, Matthew; and Peek, Leroy, to National Starch and Chemical Investment Holding Corporation. Aldehyde cationic derivatives of galactose containing polysaccharides used as paper strength additives. 5,700,917, Cl. 536-18.700.
Chiu, Sheng-Fu: *See—*
Hsiung, Han-Hsing; Chiou, Hsin-Hsiung; and Chiu, Sheng-Fu, 5,699,588, Cl. 19-66.00R.
Chiussi, Fabio Massimo; Kumar, Vijay Pochampalli; Tryfonas, Christos; and Sudhakar, Muddu, to Lucent Technologies Inc. Method and apparatus for controlling data transfer rates of data sources in asynchronous transfer mode-based networks. 5,701,292, Cl. 370-232.000.
Chmiel, Marian: *See—*
Wollny, Georg B.; and Chmiel, Marian, 5,699,757, Cl. 123-18.00R.
Cho, George; and Cho, Ying Hsaing, to Cynosure, Inc. Endoscopic light delivery system. 5,700,260, Cl. 606-15.000.
Cho, Ying Hsaing: *See—*
Cho, George; and Cho, Ying Hsaing, 5,700,260, Cl. 606-15.000.
Choi, Chang Won, to LG Semicon Co., Ltd. Television channel aural display and method thereof. 5,701,162, Cl. 348-570.000.
Choi, Chi Chung: *See—*
Roovers, Wilhelmus Cornelus Waltherus Maria; and Choi, Chi Chung, 5,700,225, Cl. 477-46.000.
Choi, Jae Myoung, to Hyundai Electronics Industries Co., Ltd. Memory device. 5,701,273, Cl. 365-230.080.
Choi, Kyoung Bin: *See—*
Park, Young Jae; Park, San Il; Choi, Kyoung Bin; Ha, Young Jin; Park, Ki Ho; Ko, Chang Bog; and Kim, Joong Gun, 5,699,852, Cl. 165-76.000.
Choi, Seung Sub: *See—*
Lee, Kwang Hyuk; Choi, Seung Sub; and Yoon, Myeong Sik, 5,700,932, Cl. 540-223.000.
Choi, Woo-Baeg: *See—*
Liotta, Dennis C.; Schinazi, Raymond F.; and Choi, Woo-Baeg, 5,700,937, Cl. 544-317.000.
Choi, Young-Suk, to Daewoo Electronics Co., Ltd. Apparatus for automatically press-fitting a turntable. 5,699,600, Cl. 29-251.000.
Chong, Ku Ho; Crockett, Charles Hayden, Jr.; Dunn, Stephen Alan, deceased (by Alice Catherine Dunn, independent administratrix); Hoebener, Karl Grant; and McMaster, Michael George, to International Business Machines Corporation. Fine dimension stacked vias for a multiple layer circuit board structure. 5,699,613, Cl. 29-852.000.
Chou, Richard Tien-Hua, to Du Pont de Nemours, E. I., and Company. New ionomers based on copolymers of ethylene with both mono-and dicarboxylic acids. 5,700,890, Cl. 526-272.000.
Chow, Che Chung: *See—*
Badesha, Santokh S.; Heeks, George J.; Henry, Arnold W.; and Chow, Che Chung, 5,700,568, Cl. 428-334.000.
Chretien, Isabelle: *See—*
Abrams, John S.; Chretien, Isabelle; Lee, Frank D.; and Pearce, Michael K., 5,700,915, Cl. 530-413.000.
Christadler, Maria: *See—*
Oswald, Mathias; Dorsch, Dieter; Mederski, Werner; Wilm, Claudia; Schmitges, Claus J.; and Christadler, Maria, 5,700,807, Cl. 514-291.000.
Chrysler Corporation: *See—*
Flaishans, Gary B.; Rudzewicz, Robert G.; and Dahl, Michael A., 5,699,857, Cl. 165-202.000.
Laitje, William V., 5,701,418, Cl. 395-200.160.
Chu, Frank: *See—*
Tang, Alex; and Chu, Frank, 5,701,445, Cl. 395-516.000.
Chuang, Ching-Shan. Sickbed. 5,699,566, Cl. 5-613.000.
Chuang, Strong C.; Kaufman, Kenneth; and Schiesser, Robert H., to Kimberly-Clark Worldwide, Inc. Capillary dewatering method. 5,699,626, Cl. 34-453.000.
Chung, Bin; Mackay, Bruce E.; and Podobnik, Ivan Zlatko, to Cabot Corporation. Carbon black containing EPDM compositions and process for producing same. 5,700,845, Cl. 521-99.000.
Chung, Sung I.; and Park, Katalina. Easy flip top tab lifter. 5,699,928, Cl. 220-269.000.
Chung, Sung Kee: *See—*
Woo, Soon Hyung; Chung, Sung Kee; Ban, Soo Ho; Kim, Byoung Bog; and Kim, Si Hwan, 5,700,817, Cl. 514-340.000.
Chung, Yu-Ping, to D-Link Corporation. Electric jack with display means. 5,700,157, Cl. 439-490.000.
Churchill, Robert Lee; and Geller, Douglas, to Swimways Corporation. Kneeboard. 5,700,174, Cl. 441-65.000.
Ciba-Geigy Corporation: *See—*
Frederiksen, Lene; Anton, Klaus; and van Hoogevest, Peter, 5,700,482, Cl. 424-450.000.
Ciba Specialty Chemicals Corporation: *See—*
Fuso, Francesco; and Reinert, Gerhard, 5,700,295, Cl. 8-189.000.
Isharani, Jayanti V.; Hung, Willaim M.; and Su, Kai C., 5,700,394, Cl. 252-301.210.
Ciena Corporation: *See—*
Huber, David R., 5,701,186, Cl. 359-125.000.
Cihlar, Joe V.: *See—*
Catallo, Giulio; Cihlar, Joe V.; and Lubbock, Maurice P. G., 5,699,838, Cl. 141-65.000.
Cimcorp Oy: *See—*
Sepplinen, Tapio, 5,699,831, Cl. 137-614.030.
Cimerman, Christopher D.; and Long, Jennifer M., to Fisher-Price, Inc. Emotional expression character. 5,700,178, Cl. 446-301.000.
Cincotta, Anthony H.; Meier, Albert H.; and Wilson, John M., to General Hospital Corporation, The; and Board of Supervisors of Louisiana State University and Agricultural and Mechanical College, The. Administration of pirenzepine, methyl scopolamine and other muscarinic receptor antagonists for treatment of type II diabetes. 5,700,795, Cl. 514-200.000.

Ciacotta, Anthony H.; and Meier, Albert H., to Ergo Science Incorporated; and Board of Supervisors of Louisiana University and Agricultural and Mechanical College, The. Methods for the long term reduction of body fat stores, insulin resistance, hyperinsulinemia and hyperglycemia in vertebrates with a prolactin stimulatory compound. 5,700,800, Cl. 514-250.000.
Circe Biomedical, Inc.: *See—*
  Hancock, Lawrence Francis; Kishbaugh, Alan Jay; and Parham, Marc Ellous, 5,700,902, Cl. 528-373.000.
  Hancock, Lawrence Francis; Kishbaugh, Alan Jay; and Parham, Marc Ellous, 5,700,903, Cl. 528-373.000.
Cirino, Clay L.: *See—*
  Tuttle, Mark E.; Mousseau, Joseph P.; and Cirino, Clay L., 5,700,981, Cl. 174-250.000.
Cirrus Logic, Inc.: *See—*
  Armstrong, Alan J.; and Zook, Christopher P., 5,701,314, Cl. 371-40.300.
  Carpenter, Peter R., 5,701,517, Cl. 395-886.000.
  Chejlava, Edward John, Jr., 5,701,477, Cl. 395-652.000.
  Glover, Neal; Zook, Christopher P.; Schadegg, John; and Witt, William L., 5,701,304, Cl. 371-10.200.
  Mohan Rao, G. R., 5,701,270, Cl. 365-230.030.
  Rao, G. R. Mohan, 5,701,143, Cl. 345-185.000.
Citicorp Development Center, Inc.: *See—*
  Do, Cuong D.; Ha, Nhut T.; and Butryn, Joseph A., 5,701,231, Cl. 361-623.000.
Citizen Watch Co., Ltd.: *See—*
  Higuchi, Haruhiko; Miyasaka, Kenji; and Miyauchi, Norio, 5,701,278, Cl. 368-204.000.
CJD Investments, Inc.: *See—*
  Adams, Ernest K., 5,700,767, Cl. 508-539.000.
Clair, Kevin J.: *See—*
  Pinchuk, Leonard; and Clair, Kevin J., 5,700,269, Cl. 606-108.000.
Claremon, David A.; Liverton, Nigel; and Selnick, Harold G., to Merck & Co, Inc. N-(2,4-dioxo-2,3,4,5-tetrahydro-1H-1,5-benzodiazepin-3-yl)-3-amides. 5,700,797, Cl. 514-221.000.
Clark, Abbot F., to Alcon Laboratories Inc. Treatment of ocular hypotony. 5,700,794, Cl. 514-177.000.
Clark, James E., II, to C.H. & I. Technologies, Inc. Device for removing fluid from a container with pressurized air and thereafter placing the container under vacuum. 5,699,940, Cl. 222-394.000.
Clark, Thomas C., to Eveready Battery Company, Inc. Battery core winder and method of winding a battery core. 5,700,299, Cl. 29-623.100.
Clarke, Berwyn Ewart: *See—*
  Newton, Susan Elizabeth; and Clarke, Berwyn Ewart, 5,700,680, Cl. 433-240.200.
Clarke, John M., to Caterpillar Inc. Method and apparatus for multiple cycle internal combustion engine operation. 5,699,758, Cl. 123-21.000.
Clausen, Anthony Robin; and Wesson, Albert Norman, to Clausen, Anthony Robin. Exercise apparatus. 5,700,232, Cl. 482-123.000.
Claydon, Paul Charles; and Ramsey, Christopher Paul, to Carnaudmetalbox (Holdings) USA Inc. Can body having sidewall grooves. 5,699,932, Cl. 220-671.000.
Cloud, Charles E.: *See—*
  Hartman, Donn A.; and Cloud, Charles E., 5,699,653, Cl. 53-455.000.
Cloud Corporation: *See—*
  Hartman, Donn A.; and Cloud, Charles E., 5,699,653, Cl. 53-455.000.
Clymer, John R.: *See—*
  James, David C.; Clymer, John R.; Corey, Philip D.; and Nili, Nafise, 5,701,439, Cl. 395-500.000.
CMA/Microdialuysis Research AB: *See—*
  Carlson, Leon, 5,700,428, Cl. 422-82.080.
CMD Corporation: *See—*
  Saindon, Stephen A.; Heindel, Kevin O.; and Morrow, James G., 5,701,180, Cl. 356-429.000.
Cobb, William T., Jr., to Design & Manufacturing Solutions, Inc. Tuned damping system for suppressing vibrations during machining. 5,700,116, Cl. 409-141.000.
Cobes, John W., III: *See—*
  Doughty, David T.; Hayden, Richard A.; Cobes, John W., III; and Matviya, Thomas M., 5,700,436, Cl. 423-210.000.
Cohen, Bernard; Jameson, Lee Kirby; Gipson, Lamar Heath; and Fauss, Judith Katherine, to Kimberly-Clark Corporation. Multilayer hydrodisintegratable film. 5,700,553, Cl. 428-220.000.
Cohen, Charles M.: *See—*
  Crea, Roberto; Pang, Roy Hoi Loi; Oppermann, Hermann; Keck, Peter C.; Alvarado-Urbina, Gabriel; Wu, Gay-May; and Cohen, Charles M., 5,700,677, Cl. 435-226.000.
Cohen, Richard M., to Swarovski Jewelry U.S. Limited. Jewelry distribution and display. 5,699,901, Cl. 206-6.100.
Colak, Sel B.: *See—*
  Liedenbaum, Coen T. H. F.; Colak, Sel B.; and Schleipen, Johannes J. H. B., 5,701,396, Cl. 395-25.000.
Cold Spring Harbor Laboratory: *See—*
  Marr, Thomas G.; and Chang, William I-Wei, 5,701,256, Cl. 364-496.000.
Coldrick, Philip: *See—*
  Fyson, John Richard; Rider, Christopher Barrie; Coldrick, Philip; and Menton, Janet Linda, 5,701,545, Cl. 396-626.000.
Cole, Douglas Bryan, to Kimberly-Clark Worldwide, Inc. Methods of incorporating a hydrophobic substance into an aqueous solution. 5,700,842, Cl. 514-721.000.
Cole, John: *See—*
  Glier, Michael T.; Cole, John; and Laird, Mark, 5,701,398, Cl. 395-27.000.
Colgate-Palmolive Co.: *See—*
  Jakubicki, Gary; McCandish, Elizabeth; Zyzyck, Len; and Drapier, Julien, 5,700,773, Cl. 510-426.000.
  Thomas, Barbara; and Wisniewski, Karen, 5,700,331, Cl. 134-29.000.
Collins, Mark Anthony David; Chicarelli-Robinson, Maria Ines; Bryans, Justin Stephen; Brocchini, Stephen James; Latham, Christopher John; and Shaw, John Richardson, to Xenova Limited. Pharmaceutical compounds. 5,700,804, Cl. 514-255.000.
Combs, Jerome T.; Busey, Hugh W.; and Ukraincik, Kresimir, to MDI Instruments, Inc. Device and process for generating and measuring the shape of an acoustic reflectance curve of an ear. 5,699,809, Cl. 128-746.000.
Commercial Intertech Corp.: *See—*
  Coolidge, Gregory T., 5,699,665, Cl. 60-426.000.
Commissariat a l'Energie Atomique: *See—*
  Bloch, Didier; Le Cras, Frédéric; and Strobel, Pierre, 5,700,442, Cl. 423-599.000.
  David, Patrick; Benazet, Jean D.; and Narcy, Bruno, 5,700,517, Cl. 427-226.000.
  Ida, Michel; and Baptist, Robert, 5,700,627, Cl. 430-311.000.
Commonwealth of Australia of Anzac Park, The: *See—*
  Anderson, Mark Stephen; Yesberg, John Desborough; Pope, Michael; Nayda, Lisa; Hayman, Ken; and Beahan, Brendan, 5,701,342, Cl. 380-4.000.
Compagnie Generale des Etablissements Michelin - MICHELIN & CIE: *See—*
  Billieres, Jean, 5,700,339, Cl. 156-117.000.
Compaq Computer Corporation: *See—*
  Daniels, George R.; Halseth, Thor R.; and Vehse, Daniel R., 5,701,347, Cl. 381-24.000.
  Moriarty, Michael P.; and Larson, John E., 5,701,433, Cl. 395-481.000.
Computer Identics Corporation: *See—*
  Chisholm, Thomas J.; Richard, Gary; and Rysin, Alexander, 5,701,003, Cl. 250-205.000.
Conatser, Roger; and Jarboe, Victor R., to Campbell Hausfeld/Scott Fetzer Co. Airless spray gun diffuser. 5,699,967, Cl. 239-526.000.
Concannon, Ted; Vala, John; and Banks, Gerald, to Unisys Corp. Adjusting illumination for image lift. 5,701,361, Cl. 382-138.000.
Conductron Corporation: *See—*
  Bello, Salvatore H.; and Howanski, John W., 5,700,980, Cl. 174-146.000.
Conrad, Lars Sparre: *See—*
  Schneider, Palle; Conrad, Lars Sparre; Ebdrup, Søren; and Yde, Birgitte, 5,700,769, Cl. 510-305.000.
Constantia (International) Limited: *See—*
  Saxby, Michael Ernest, 5,700,972, Cl. 102-440.000.
Cook Incorporated: *See—*
  Parker, Fred T., 5,700,253, Cl. 604-282.000.
Cook, Perry R.: *See—*
  Smith, Julius O., III; and Cook, Perry R., 5,701,393, Cl. 395-2.670.
Cook, Peter J.: *See—*
  Whitney, Alan; Neeman, Yuval; Koneru, Sudheer; Shah, Milan; Cook, Peter J.; and Miller, Arnold S., 5,701,462, Cl. 395-610.000.
Cook, Phillip Dan, to Isis Pharmaceuticals, Inc. PNA-DNA-PNA chimeric macromolecules. 5,700,922, Cl. 536-23.100.
Cook, Robert D.; and Salamat, Bijan, to Hydro-Aire Division of Crane Company. Brake energy balancing system for multiple brake units. 5,700,072, Cl. 303-135.000.
Cook, Roger Joseph; DeVoe, Joseph Paul; Macfarlane, Kevin Douglas; Parks, Daniel Robert; and Gibson, Patrick William, to Ford Global Technologies, Inc. Obstruction-sensing system for a movable member. 5,701,063, Cl. 318-469.000.
Coolidge, Gregory T., to Commercial Intertech Corp. Control system with induced load isolation and relief. 5,699,665, Cl. 60-426.000.
Coolidge, Thomas R.: *See—*
  Gutniak, Mark K.; Coolidge, Thomas R.; Recker, Robert R.; and Wagner, Fred W., 5,700,775, Cl. 514-12.000.
Cooper Industries: *See—*
  Mock, Mel Corrie, 5,699,617, Cl. 30-252.000.
Cooper Industries, Inc.: *See—*
  Schumacher, Philip P.; and Cummins, James C., 5,701,080, Cl. 324-539.000.
Cooper, Robert P.: *See—*
  Gordon, Norman S.; Cooper, Robert P.; and Quick, Richard L., 5,700,272, Cl. 606-144.000.
Coors Ceramics Company: *See—*
  Ritland, Marcus A.; Readey, Dennis W.; Kleiner, Richard N.; and Sibold, Jack D., 5,700,373, Cl. 210-323.200.
Cope, Frederick Oliver; Rausch, Linda Sue; Richards, Ernest William; Smith, Michelle Marie; Abbruzzese, Bonnie Chandler; and Pero, Joan Marie, to Abbott Laboratories. Enteral nutritional product. 5,700,782, Cl. 514-21.000.
Corbett, Martin John: *See—*
  Tao, Weng; Corbett, Martin John; and Pickett, Walter C., 5,700,465, Cl. 424-130.100.
Cordis Corporation: *See—*
  Mulder, Hugo, 5,700,242, Cl. 604-96.000.
Corey, Philip D.: *See—*

  James, David C.; Clymer, John R.; Corey, Philip D.; and Nili, Nafise, 5,701,439, Cl. 395-500.000.
Coriale, Matthew C.: *See—*
  Lawlor, Patrick; and Coriale, Matthew C., 5,700,008, Cl. 273-118.00A.
Corken, Inc.: *See—*
  Gray, James Delwin; Hughes, Michael Franklin; and Lutes, Paul Joseph, 5,700,140, Cl. 418-104.000.
Cornelia Textiles, Inc.: *See—*
  Hammer, John F., 5,699,646, Cl. 53-397.000.
Cornell, Julie Eileen; Diaz, Jorge Lazaro; Ho, Derek Wan Hok; Nguyen, Son Duc; and Tran, Cuong Huu, to International Business Machines Corporation. Method for testing computer operating or application programming interfaces. 5,701,408, Cl. 395-183.140.
Corning Incorporated: *See—*
  Burns, James F.; Dailey, Michael J.; and Deming, Scott W., 5,701,178, Cl. 356-371.000.
Corrado, Frank C.; Fischer, James W.; Larsen, Gary R.; and Sweet, Ronald W., to Seratek LLC. Apparatus and method for cleaning a roller. 5,699,738, Cl. 101-425.000.
Corrosion Engineering, Inc.: *See—*
  Dunn, Donald C., 5,699,918, Cl. 209-397.000.
Corry, Arthur A. Method of molding an article. 5,700,409, Cl. 264-87.000.
Cortech, Inc.: *See—*
  Goodfellow, Val S.; Marathe, Manoj V.; Whalley, Eric T.; Fitzpatrick, Timothy D.; and Kuhlman, Karen G., 5,700,779, Cl. 514-14.000.
Corvita Corporation: *See—*
  Pinchuk, Leonard; and Clair, Kevin J., 5,700,269, Cl. 606-108.000.
Costa, Hilario S.: *See—*
  Right, Robert W.; Costa, Hilario S.; and Hewlin, John P., 5,701,115, Cl. 340-286.050.
Costales, Mark J.: *See—*
  Van Heertum, John C.; Kleschick, William A.; Arndt, Kim E.; Costales, Mark J.; Ehr, Robert J.; Bradley, Kimberly Brubaker; Reifschneider, Walter; Benkö, Zoltan; Ash, Mary Lynne; and Jachetta, John J., 5,700,940, Cl. 546-119.000.
Cotten, David L., Jr. Tool for removing vehicle gas tank cap. 5,699,701, Cl. 81-3.400.
Couillard, Albert: *See—*
  Berger, Régis; Gauthier, Yves; Couillard, Albert; and Belzile, Rolland, 5,699,915, Cl. 206-597.000.
Couldridge, Paul R. Stretcher for immobilizing a patient or casualty. 5,699,568, Cl. 5-628.000.
Counsell, John M.; and Reeves, John H., to EA Technology Limited. Heating apparatus controlled to utilize lower cost energy. 5,700,993, Cl. 219-483.000.
Cousins, James E.; Markiel, George R.; and Boyter, Ruben C., to Perf Drill, Inc. Sectional drive system. 5,699,866, Cl. 175-78.000.
Couvret, Virginie: *See—*
  Boittiaux, Patrick; Couvret, Virginie; and Joubert, Daniel, 5,700,294, Cl. 8-137.000.
Cox, Isaiah Watas, to Boreaus Technical Limited. Multiple electrostatic gas phase heat pump and method. 5,699,668, Cl. 62-3.100.
Cox, Peter Glen. Purification of water. 5,700,377, Cl. 210-724.000.
Craig, Frank; Straeter, Joseph G.; and Weder, Donald E., to Southpac Trust International, Inc. Article packaging system. 5,699,652, Cl. 53-449.000.
Craig, Franklin J.: *See—*
  Weder, Donald E.; Straeter, Joseph G.; and Craig, Franklin J., 5,699,647, Cl. 53-397.000.
Crane Plastics Company Limited Partnership: *See—*
  Korney, Arthur F., Jr.; Sexton, Earl H., III; and Young, Winnie, 5,700,578, Cl. 428-421.000.
Crawford, Alan: *See—*
  Stevens, Marc P.; and Crawford, Alan, 5,701,404, Cl. 395-123.000.
Crawford, Robert Dennis: *See—*
  BeMent, Bradley Earl; Tiedje, Kevin Mark; and Crawford, Robert Dennis, 5,701,410, Cl. 395-183.190.
Cray Research, Inc.: *See—*
  Thorson, Gregory M.; and Scott, Steven L., 5,701,416, Cl. 395-200.150.
Crea, Roberto; Pang, Roy Hoi Loi; Oppermann, Hermann; Keck, Peter C.; Alvarado-Urbina, Gabriel; Wu, Gay-May; and Cohen, Charles M., to Creative BioMolecules, Inc.; and A. Menarini S.A.S. Protein analogues of tissue plasminogen activator. 5,700,677, Cl. 435-226.000.
Creaden, David E., to Lawrence Paper Company. Slotter wheel mechanism having selectively rotatable slotter blade. 5,699,710, Cl. 83-332.000.
Creative BioMolecules, Inc.: *See—*
  Crea, Roberto; Pang, Roy Hoi Loi; Oppermann, Hermann; Keck, Peter C.; Alvarado-Urbina, Gabriel; Wu, Gay-May; and Cohen, Charles M., 5,700,677, Cl. 435-226.000.
Creatura, John A.: *See—*
  Silence, Scott M.; Creatura, John A.; Hsieh, Bing R.; Ziolo, Ronald F.; and Ellis, Richard W., 5,700,615, Cl. 430-106.600.
Cree, Robert E.; and Rodriguez, Ricardo P., to Addex Design, Inc. Gauge band randomizer. 5,700,488, Cl. 425-72.100.
Creedon, Michael Timothy: *See—*
  Chapman, Benjamin Edgar; and Creedon, Michael Timothy, 5,700,386, Cl. 252-8.620.
Creo Products Inc.: *See—*
  Gelbart, Daniel, 5,699,740, Cl. 101-477.000.
Crimmin, Michael John: *See—*
  Dickens, Jonathan Philip; Crimmin, Michael John; and Beckett, Raymond Paul, 5,700,838, Cl. 514-575.000.
Crisofulli, Thomas: *See—*
  Delorrae, Virgil A.; Crisofulli, Thomas; and Warner, Madelyn Joy, 5,699,827, Cl. 137-268.000.
Criswell, Peter Bradley: *See—*
  Alferness, Merwin H.; Criswell, Peter Bradley; Johnson, David Randal; and McBreen, James R., 5,701,316, Cl. 371-53.000.
Critser, John K.; and Gao, D. Y., to Methodist Hospital of Indiana. General method to quickly remove cryoprotectants from animal cells while maintaining viability. 5,700,632, Cl. 435-2.000.
Crockett, Charles Hayden, Jr.: *See—*
  Chong, Ku Ho; Crockett, Charles Hayden, Jr.; Dunn, Stephen Alan, deceased; Hoebener, Karl Grant; and McMaster, Michael George, 5,699,613, Cl. 29-852.000.
Croft, Thomas Milton; Dent, Paul Wilkinson; Harte, Lawrence J.; and Solve, Torbjorn, to Ericsson Inc. Standby power savings with cumulative party check in mobile phones. 5,701,329, Cl. 375-224.000.
Croteau, Andrew J.; Pierson, Mark W.; Townsend, David E.; and Naqui, Ali, to Idexx Laboratories, Inc. Method for quantification of biological material in a sample. 5,700,655, Cl. 435-30.000.
Crowe, David Arthur: *See—*
  Hashish, Mohamed Ahmed; Crowe, David Arthur; and Armstrong, Neil Dean, 5,700,181, Cl. 451-40.000.
Crowley, R. Hugh: *See—*
  Caulder, Jerry; Crowley, R. Hugh; Zorner, Paul S.; and Evans, Steven L., 5,700,759, Cl. 504-133.000.
Crozier, Keith, to Puma Technology, Inc. Method for mapping, translating, and dynamically reconciling data between disparate computer platforms. 5,701,423, Cl. 395-335.000.
Crugnola, Angelo: *See—*
  Mongelli, Nicola; Crugnola, Angelo; Lombardi Borgia, Andrea; and Pesenti, Enrico, 5,700,788, Cl. 514-91.000.
Cruz, Lourdes J.: *See—*
  Olivera, Baldomero M.; Rivier, Jean E.F.; Cruz, Lourdes J.; Abogadie, Fe; Hopkins, Chris E.; Dykert, John; and Torres, Josep L., 5,700,778, Cl. 514-12.000.
Csapo, John Steven; Aldrich, James Peter; and Gay, Ben Douglas, to Motorola, Inc. Data over cellular. 5,701,297, Cl. 370-341.000.
Culler, Scott R.: *See—*
  Stoetzel, William L.; and Culler, Scott R., 5,700,302, Cl. 51-295.000.
Cummings, Richard Dale: *See—*
  Prieto, Pedro Antonio; Smith, David Fletcher; Cummings, Richard Dale; Kopchick, John Joseph; Mukerji, Pradip; Moremen, Kelley Wilson; and Pierce, James Michael, 5,700,671, Cl. 435-172.300.
Cummins, James C.: *See—*
  Schumacher, Philip P.; and Cummins, James C., 5,701,080, Cl. 324-539.000.
Cunningham, April: *See—*
  Lazo, John S.; Rice, Robert L.; Cunningham, April; and Wipf, Peter, 5,700,821, Cl. 514-374.000.
Cunningham, Brian C.: *See—*
  Bott, Richard Ray; Caldwell, Robert Mark; Cunningham, Brian C.; Estell, David Aaron; Power, Scott Douglas; and Wells, James Allen, 5,700,676, Cl. 435-221.000.
Cunningham, John Edward; Jan, William Young; Knox, Wayne Harvey; and Tsuda, Sergio, to Lucent Technologies Inc. Saturable Bragg reflector structure and process for fabricating the same. 5,701,327, Cl. 372-99.000.
Cunningham, Michael P.: *See—*
  Farruggia, Giuseppe; Hatwar, Tukaram K.; and Cunningham, Michael P., 5,700,540, Cl. 428-641.000.
Cuny, Douglas J.: *See—*
  Peyser, Mark S.; Cuny, Douglas J.; Strauss, Douglas W.; Reed, Scott W.; Rethy, Csaba L.; and Aranyi, Ernie, 5,700,270, Cl. 606-142.000.
Curran, William V.: *See—*
  Feigelson, Gregg Brian; Curran, William V.; and Ziegler, Carl Bernard, 5,700,930, Cl. 540-200.000.
Curro, John Joseph; Wolf, Scot G.; and King, Willie, to Procter & Gamble Company, The. Absorbent article having composite elasticized member. 5,700,255, Cl. 604-385.200.
Curtis, Neil Roy; Kulagowski, Janusz Jozef; and Leeson, Paul David, to Merck Sharp & Dohme, Ltd. Furopyridine derivatives. 5,700,802, Cl. 514-253.000.
Curtis, Neil Roy: *See—*
  Leeson, Paul David; Smith, Adrian Leonard; Ridgill, Mark Peter; Baker, Raymond; Curtis, Neil Roy; and Kulagowski, Janusz Jozef, 5,700,809, Cl. 514-300.000.
Cushnie, Kirt Kenneth: *See—*
  Ettel, Victor Alexander; Ambrose, John; Cushnie, Kirt Kenneth; Bell, James Alexander E.; Paserin, Vladimir; and Kalal, Peter Joseph, 5,700,363, Cl. 205-271.000.
Cygnus, Inc.: *See—*
  Biegajski, James E.; Venkatraman, Subbu S.; and Scott, Ann M., 5,700,478, Cl. 424-434.000.
Cynosure, Inc.: *See—*
  Cho, George; and Cho, Ying Hsaing, 5,700,260, Cl. 606-15.000.
Cypress Semiconductor Corp.: *See—*
  Taffe, Norman P.; Douglass, Stephen M.; and Nazarian, Hagop, 5,701,092, Cl. 326-41.000.
  Watt, Jeffrey, 5,701,024, Cl. 257-360.000.
Cyrix Corporation: *See—*
  White, Christopher E., 5,701,448, Cl. 395-580.000.

Czank, Stephen C.; Desmarais, Robert J.; and Arnold, Stephen M., to TRW Vehicle Safety Systems, Inc. Seat belt buckle spring. 5,699,594, Cl. 24-632.000.
Czerniawski, John A.: *See—*
Wieloch, Francis J.; LaManna, Gina M.; Jackson, Frank J., Jr.; Smallman, Gary W.; Kemp, Kenneth A.; Speakman, Edward J.; Grabowski, Edward F.; Street, Terry L.; Wisniewski, Carl A.; and Czerniawski, John A., 5,699,584, Cl. 15-256.520.
Czerwinski, Mary P.: *See—*
Lee, S. Daniel; Nguyen, Trung D.; and Czerwinski, Mary P., 5,701,399, Cl. 395-51.000.
D-Link Corporation: *See—*
Chung, Yu-Ping, 5,700,157, Cl. 439-490.000.
d'Achard Van Enschut, Johannes F. M., to U.S. Philips Corporation. Virtual pinball/video arcade games. 5,700,193, Cl. 463-1.000.
Daewon Pharm. Co., Ltd.: *See—*
Baik, Bu Hyun; Lee, Young Woo; and Lee, Yong Bok, 5,700,832, Cl. 514-503.000.
Daewoo Electronics Co., Ltd.: *See—*
Choi, Young-Suk, 5,699,600, Cl. 29-251.000.
Ji, Jeong-Beom; and Min, Yong-Ki, 5,701,192, Cl. 359-224.000.
Joe, Yeo-Uk, 5,700,960, Cl. 73-865.900.
Jung, Hae-Mook, 5,701,368, Cl. 382-239.000.
Kim, Gyu-Seok, 5,701,126, Cl. 341-67.000.
Park, Chan-Sou, 5,701,384, Cl. 386-70.000.
Dahl, Michael A.: *See—*
Flaishans, Gary B.; Rudzewicz, Robert G.; and Dahl, Michael A., 5,699,857, Cl. 165-202.000.
Dahn, Jeffery Raymond: *See—*
Zhong, Qiming; Sacken, Ulrich Von; Gao, Yuan; and Dahn, Jeffery Raymond, 5,700,597, Cl. 429-218.000.
Daicel Chemical Industries, Ltd.: *See—*
Kitaguchi, Tooru; and Yoneda, Mikio, 5,700,565, Cl. 428-332.000.
Daido Metal Company Ltd.: *See—*
Hiramatsu, Nobutaka; Sugita, Mitsuru; Mizuno, Yoshikazu; and Shibayama, Takayuki, 5,700,093, Cl. 384-276.000.
Daido Steel Co., Ltd.: *See—*
Shimizu, Takao; and Horio, Hirotsugu, 5,699,955, Cl. 228-194.000.
Daigle, Robert V.: *See—*
Linskey, Edward, Jr.; and Daigle, Robert V., 5,699,748, Cl. 114-221.00R.
Daikin Industries Ltd.: *See—*
Tomihashi, Nobuyuki; and Terasaka, Kiyotaro, 5,700,861, Cl. 524-544.000.
Dailey, Michael J.: *See—*
Burns, James F.; Dailey, Michael J.; and Deming, Scott W., 5,701,178, Cl. 356-371.000.
Daimler-Benz AG: *See—*
Duvinage, Frank; Paule, Markus; Krämer, Michael; Rippert, Nils; and Enderle, Christian, 5,699,765, Cl. 123-315.000.
Daines, Robert A., to SmithKline Beecham Corporation. Process for making phenylthiomethylpyridinylalkenoates. 5,700,943, Cl. 546-296.000.
Dainichiseika Color & Chemicals Mfg. Co., Ltd.: *See—*
Hanada, Kazuyuki, 5,700,868, Cl. 524-590.000.
Dainippon Screen Manufacturing Co., Ltd.: *See—*
Okazaki, Masahide, 5,701,201, Cl. 359-487.000.
Daitoh System Company, Ltd.: *See—*
Kawanobe, Norio, 5,700,328, Cl. 134-1.000.
Dalal, Ketan K.; and Hecht, Stephen Charles, to Microsoft Corporation. Method and system for accessing a remote database using pass-through queries. 5,701,461, Cl. 395-604.000.
Dalla Torre, Hans: *See—*
Hewel, Manfred; and Dalla Torre, Hans, 5,700,900, Cl. 528-335.000.
Dam, Chuong Q.; Hafner, Gregory G.; and Burris, Kenneth W., to Caterpillar, Inc. Bearing assembly having improved fretting and abrasion resistance. 5,700,094, Cl. 384-569.000.
Dambus, Ture; Kirk, Ole; Pedersen, Gitte; and Venegas, Manuel Garcia, to Novo Nordisk A/S. Dye transfer inhibition and novel peroxidase. 5,700,770, Cl. 510-305.000.
Damo, Zoltan: *See—*
Frisch, Gerhard; and Damo, Zoltan, 5,700,472, Cl. 424-405.000.
Dana Corporation: *See—*
Beckman, John A., 5,700,033, Cl. 280-795.000.
Tensor, Paul M., 5,700,015, Cl. 277-180.000.
Tensor, Paul M., 5,700,017, Cl. 277-235.00B.
Daniel, Jean-Yves: *See—*
Blin, Patrick; Daniel, Jean-Yves; and Saulas, Alain, 5,699,957, Cl. 229-117.120.
Daniel, Steven G.: *See—*
Westling, Mark E.; and Daniel, Steven G., 5,700,921, Cl. 536-22.100.
Daniele, Vincenzo: *See—*
Calligaro, Cristiano; Daniele, Vincenzo; Gastaldi, Roberto; Manstretta, Alessandro; and Torelli, Guido, 5,701,265, Cl. 365-185.030.
Daniels, George R.; Halseth, Thor R.; and Vehse, Daniel R., to Compaq Computer Corporation. Audio system for a personal computer. 5,701,347, Cl. 381-24.000.
Danknick, Daniel A.: *See—*
Wadsworth, Robert D.; and Danknick, Daniel A., 5,701,492, Cl. 395-712.000.
Danko, Thomas; and Nicholson, Myron Donald. High absorption rate battery separator. 5,700,599, Cl. 429-249.000.
Danko, Thomas; and Nicholson, Myron Donald. Long life battery separator. 5,700,600, Cl. 429-249.000.
Danoff, Theodore: *See—*
Neilson, Eric G.; Danoff, Theodore; Okada, Hirokazu; and Strutz, Frank, 5,700,690, Cl. 435-320.100.
Dao, Giang T.; Tam, Nelson N.; Liu, Gang; and Farnsworth, Jeffrey N., to Intel Corporation. Method and apparatus for precision determination of phase-shift in a phase-shifted reticle. 5,700,602, Cl. 430-5.000.
Daoust, Jacques: *See—*
Bowen, Larry; Ayres, George Edward; Black, Gary; and Daoust, Jacques, 5,699,812, Cl. 131-374.000.
Dasso, John M. Electronic three-dimensional viewing system. 5,701,154, Cl. 348-42.000.
Daugherty, Joseph Patrick, to Martin Marietta Corporation. Spacecraft with heat dissipators mounted on thermally coupled shelves. 5,699,982, Cl. 244-63.000.
Daus, Manfred: *See—*
Wolf, Christoph; and Daus, Manfred, 5,701,050, Cl. 313-25.000.
D'Avello, Robert F.: *See—*
Lee, Steven G.; Iehl, Brian D.; Manya, Omerom; Schellinger, Michael J.; and D'Avello, Robert F., 5,701,589, Cl. 455-56.100.
David, Patrick; Benazet, Jean D.; and Narcy, Bruno, to Commissariat a l'Energie Atomique. Process for the densification of a porous structure by boron nitride. 5,700,517, Cl. 427-226.000.
Davidson, Russell K.; Heyer, Michael H. J.; and Masters, James C., to Lear Corporation. Seat back automatic height adjustor and recliner mechanism. 5,700,055, Cl. 297-378.120.
Davidson, Thomas Charles; and Werner, Georgina M., to Rhone-Poulenc Inc. Methods of attracting and combatting insects. 5,700,460, Cl. 424-84.000.
Davies, Steven P.: *See—*
Harrison, R. Loyd; and Davies, Steven P., 5,701,482, Cl. 395-675.000.
Davis, Bill C.: *See—*
Baer, Jose T.; Davis, Bill C.; and Blanyer, Richard J., 5,701,068, Cl. 320-15.000.
Davis, James A.; Henegar, Jeffrey W.; and Barham, William F., Jr., to Bridgestone/Firestone, Inc. Mineral filled EPDM membrane compositions with improved adhesion performance. 5,700,538, Cl. 428-57.000.
Davis, Robert D., Sr.: *See—*
McAteer, Colin H.; Davis, Robert D., Sr.; and Calvin, Joel R., 5,700,942, Cl. 546-181.000.
Davis, Robert H.: *See—*
Marble, Herbert A.; and Davis, Robert H., 5,700,667, Cl. 435-91.300.
Davlin, Anthony Orkin: *See—*
Sperry, Laurence Burst; and Davlin, Anthony Orkin, 5,699,902, Cl. 206-219.000.
DBT Deutsche Bergbau-Technik GmbH: *See—*
Merten, Gerhard; and Fischer, Frank, 5,700,061, Cl. 299-43.000.
Dean, Thomas R.; Hellberg, Mark; and Sallee, Verney L., to Alcon Laboratories, Inc. 3-Oxa-D-prostaglandins for lowering IOP. 5,700,835, Cl. 514-530.000.
Deason, Howard Thomas: *See—*
Vinson, Kenneth Douglas; and Deason, Howard Thomas, 5,700,352, Cl. 162-111.000.
DeBey, Henry C., to Delta Beta Pty. Ltd. Method and apparatus for efficient transmissions of programs. 5,701,582, Cl. 455-5.100.
DeCaro, Robert E.: *See—*
Carson, John C.; DeCaro, Robert E.; Hsu, Ying; and Miyake, Michael K., 5,701,233, Cl. 361-735.000.
Decibel Instruments, Inc.: *See—*
Shennib, Adnan; and Urso, Richard, 5,701,348, Cl. 381-68.600.
Deckner, George Endel; Pichardo, Francisco Antonio; Alban, Noelle Carolyn; and Sills, Marsha Carolyn, to Procter & Gamble Company, The. Compositions for imparting an artificial tan and protecting the skin from ultraviolet radiation. 5,700,452, Cl. 424-59.000.
Decrouez, Christelle, to SGS-Thomson Microelectronics S.A. Detector of the presence of a sequence of FSK modulated signals arriving on a modem. 5,701,332, Cl. 375-334.000.
Dedhar, Shoukat: *See—*
Pierschbacher, Michael D.; Ruoslahti, Erkki I.; and Dedhar, Shoukat, 5,700,681, Cl. 435-240.210.
De Ferra, Lorenzo; Massardo, Pietro; Piccolo, Oreste; and Servi, Stefano, to Italfarmaco Sud S.p.A. Process for the industrial preparation of phosphatidylserine. 5,700,668, Cl. 435-106.000.
De Filippo, Emilio, to Gestind-M.B. "Manifattura di Brusolo" S.p.A. Headrest for motor vehicle seats and a method for its manufacturing. 5,700,057, Cl. 297-408.000.
Deguchi, Hironori; and Shimada, Toshiyuki, to Matsushita Electric Industrial Co., Ltd. Data detection apparatus. 5,701,310, Cl. 371-30.000.
Degussa Aktiengesellschaft: *See—*
Kilama, John Jolly, 5,700,761, Cl. 504-221.000.
Dehne, Hans-Joachim, to Acurex Environmental Corporation. Zero-vent liquid natural gas fueling station. 5,699,839, Cl. 141-248.000.
Deir, Thomas; and Pitre, John. Plastisol paint and method of use. 5,700,858, Cl. 524-297.000.
Dekeyser, Mark Achiel; and McDonald, Paul Thomas, to Uniroyal Chemical Company, Inc.; and Uniroyal Chemical Ltd/Ltee. Pesticidal hydrazide derivatives. 5,700,831, Cl. 514-489.000.
Delabastita, Paul: *See—*
Bosschaerts, Jacobus; Govaert, René; and Delabastita, Paul, 5,700,610, Cl. 430-30.000.
de la Chapelle, Albert: *See—*

Kere, Juha; Schlessinger, David; de la Chapelle, Albert; and Srivastava, Anand Kumar, 5,700,926, Cl. 536-23.100.
de La Soujeole, Axel Alegre: *See—*
Cameron, Scott Warren; and de La Soujeole, Axel Alegre, 5,701,213, Cl. 360-66.000.
Delco Electronics Corporation: *See—*
Howlett, Gordon Phillip; and Reigler, John Norris, 5,701,345, Cl. 381-13.000.
Kincaid, Kevin Dale, 5,701,038, Cl. 307-10.100.
Lippmann, Raymond; Schnars, Michael John; Nelson, James Edward; and Chintyan, James Robert, 5,701,330, Cl. 375-257.000.
Dell U.S.A., L.P.: *See—*
Bell, James S., 5,699,954, Cl. 228-180.100.
Delorme, Virgil A.; Crisofulli, Thomas; and Warner, Madelyn Joy. Lawn treatment apparatus for an underground sprinkler system. 5,699,827, Cl. 137-268.000.
Delta Beta Pty. Ltd.: *See—*
DeBey, Henry C., 5,701,582, Cl. 455-5.100.
DeLuca, Michael J.; and Mittel, James G., to Motorola, Inc. Method and apparatus for selectively providing repeat messages in a radio communication system. 5,701,312, Cl. 371-32.000.
DeMaio, James: *See—*
Bishai, William R.; Young, Douglas B.; Zhang, Ying; and DeMaio, James, 5,700,925, Cl. 536-23.100.
Demarest, Scott W.: *See—*
Bonnema, James; Wang, Wen Der; Demarest, Scott W.; Furner, Paul E.; and Hildebrandt, Donald W., 5,700,430, Cl. 422-125.000.
Deming, Scott W.: *See—*
Burns, James F.; Dailey, Michael J.; and Deming, Scott W., 5,701,178, Cl. 356-371.000.
Deni, Frank; Deni, Joseph A.; and Deni, Leonard A., to Unittool Punch & Die Company. Punch press device. 5,699,708, Cl. 83-180.000.
Deni, Joseph A.: *See—*
Deni, Frank; Deni, Joseph A.; and Deni, Leonard A., 5,699,708, Cl. 83-180.000.
Deni, Leonard A.: *See—*
Deni, Frank; Deni, Joseph A.; and Deni, Leonard A., 5,699,708, Cl. 83-180.000.
Denis, Sophie; Orsini, Francois; Tarascon, Jean-Marie; and Touboul, Marcel, to Bell Communications Research, Inc. Method for preparing mixed amorphous vanadium oxides and their use as electrodes in reachargeable lithium cells. 5,700,598, Cl. 429-218.000.
Denison, Mark D.: *See—*
Thackeray, James W.; Sinta, Roger F.; Denison, Mark D.; and Ablaza, Sheri L., 5,700,624, Cl. 430-270.100.
Dennis, Blaine S.: *See—*
Millett, Ronald P.; Tuck, Robin P.; Dennis, Blaine S.; and Robertson, David O., 5,701,459, Cl. 395-603.000.
Dennison, Charles H.: *See—*
Lee, Roger R.; and Dennison, Charles H., 5,700,730, Cl. 438-298.000.
Denso Corporation: *See—*
Matsumoto, Shuichi; Kuroyanagi, Masatoshi; Toyao, Tetsuya; Murakami, Masashi; and Arakoma, Yukihisa, 5,699,770, Cl. 123-470.000.
Dent, Paul Wilkinson: *See—*
Croft, Thomas Milton; Dent, Paul Wilkinson; Harte, Lawrence J.; and Solve, Torbjorn, 5,701,329, Cl. 375-224.000.
Derflinger, Karl; Schmid, Herbert; and Dickinger, Johann, to Miba Sintermetall Aktiengesellschaft. Method of producing a sliding sleeve for the synchronizer means of a change-speed gear. 5,701,574, Cl. 419-26.000.
Dermer, Greg: *See—*
Nedwek, David J.; Wilson, Howard; Nugent, Steve; and Dermer, Greg, 5,701,420, Cl. 395-284.000.
Desai, Neil P.: *See—*
Soon-Shiong, Patrick; Desai, Neil P.; Sandford, Paul A.; Heintz, Roswitha A.; and Sojomihardjo, Soebianto, 5,700,848, Cl. 522-7.000.
Desaulty, Michel André Albert: *See—*
Capelle, Jean-Yves; Desaulty, Michel André Albert; and Le Letty, Eric Charles Louis, 5,699,663, Cl. 60-204.000.
Design & Manufacturing Solutions, Inc.: *See—*
Cobb, William T., Jr., 5,700,116, Cl. 409-141.000.
Desjardins, Jean-Jacques; and Dupart, Pierre, to Nestec S.A. Preparation of food extrudate which floats during rehydration. 5,700,512, Cl. 426-577.000.
Desmarais, Robert J.: *See—*
Czank, Stephen C.; Desmarais, Robert J.; and Arnold, Stephen M., 5,699,594, Cl. 24-632.000.
Desmet, Hans, to N.V. Michel Van De Wiele. Combined pile feeder control system and pile warp let-off motion for pile weaving machine. 5,699,837, Cl. 139-102.000.
Detable, Pascal: *See—*
Andre, Michel; and Detable, Pascal, 5,700,041, Cl. 285-325.000.
Detlefsen, William David: *See—*
Shiau, David Wen-I; Detlefsen, William David; and Phillips, Earl Kay, 5,700,587, Cl. 428-528.000.
Deurer, Lothar: *See—*
Hille, Thomas; and Deurer, Lothar, 5,700,480, Cl. 424-448.000.
Deutsche Carbone AG: *See—*
Steinhauser, Hermann A.; and Brilschke, Hartmut E. A., 5,700,374, Cl. 210-640.000.
Deutsche Forschungsanstalt fuer Luft- und Raumfahrt e.V.: *See—*
Kocian, Frank, 5,700,129, Cl. 415-138.000.
Deutsche Thomson-Brandt GmbH: *See—*
Storz, Achim; and Eigeldinger, Norbert, 5,701,593, Cl. 455-70.000.
Devaan, Jon: *See—*
Capson, Brian; Cherry, Wes; Devaan, Jon; Duncan, Chris; Fowkes, Raymond E.; Graham, Christopher E.; James, Lisa R.; and McGuire, Timothy W., Jr., 5,701,499, Cl. 395-764.000.
DeVoe, Joseph Paul: *See—*
Cook, Roger Joseph; DeVoe, Joseph Paul; Macfarlane, Kevin Douglas; Parks, Daniel Robert; and Gibson, Patrick William, 5,701,063, Cl. 318-469.000.
Dew, Lisa Renee: *See—*
Yue, Jiang; Dew, Lisa Renee; and Bissett, Donald Lynn, 5,700,451, Cl. 424-59.000.
De Wet, Jeffrey R.: *See—*
McElroy, Marlene D., deceased; Helinski, Donald R.; Wood, Keith V.; De Wet, Jeffrey R.; Ow, David W.; and Howell, Stephen H., 5,700,673, Cl. 435-189.000.
Déziel, Robert: *See—*
Beaulieu, Pierre Louis; Déziel, Robert; and Lavallée, Pierre, 5,700,780, Cl. 514-17.000.
Diachina, John Walter; and Andersson, Håkan Clas, to Telefonaktiebolaget LM Ericsson. Automatic retransmission request. 5,701,298, Cl. 370-346.000.
Diafer B.V.: *See—*
Broersma, Rogier, 5,699,914, Cl. 206-517.000.
Dialogic Corporation: *See—*
Zwick, Nicholas, 5,701,340, Cl. 379-204.000.
Diaz, Jorge Lazaro: *See—*
Cornell, Julie Eileen; Diaz, Jorge Lazaro; Ho, Derek Wan Hok; Nguyen, Son Duc; and Tran, Cuong Huu, 5,701,408, Cl. 395-183.140.
Di Camillo, Orazio: *See—*
Spada, Walter; and Di Camillo, Orazio, 5,699,896, Cl. 198-747.000.
Dickens, Jonathan Philip; Crimmin, Michael John; and Beckett, Raymond Paul, to British Biotech Pharmaceuticals Limited. Hydroxamic acid derivatives as metalloproteinase inhibitors. 5,700,838, Cl. 514-575.000.
Dickinger, Johann: *See—*
Derflinger, Karl; Schmid, Herbert; and Dickinger, Johann, 5,701,574, Cl. 419-26.000.
Didier, James J., to Beloit Technologies, Inc. Mechanical blanket clamp in rotating head assembly. 5,700,357, Cl. 162-358.300.
Diep, Dinh: *See—*
Braxton, Scott Michael; Diep, Dinh; and Stuart, Susan G., 5,700,924, Cl. 536-23.100.
Digisonix, Inc.: *See—*
Popovich, Steven R., 5,701,350, Cl. 381-71.000.
Digital Equipment Corporation: *See—*
Artsy, Yeshayahu, 5,701,484, Cl. 395-683.000.
Lathrop, Alan, 5,701,427, Cl. 395-200.010.
Raz, Yoav, 5,701,480, Cl. 395-671.000.
Digital Voice Systems, Inc.: *See—*
Griffin, Daniel W.; and Hardwick, John C., 5,701,390, Cl. 395-2.150.
Digonnet, Michel J. F.; Falquier, Dario G.; Wagener, Jefferson L.; and Shaw, H. John, to Leland Stanford Junior University, The Board of Trustees of the. Polarized superfluorescent fiber sources. 5,701,318, Cl. 372-6.000.
DiMarchi, Richard D.: *See—*
Chance, Ronald E.; DiMarchi, Richard D.; Frank, Bruce H.; and Shields, James E., 5,700,662, Cl. 435-69.400.
Dimian, Adel F.: *See—*
Jones, Frank N.; Du, Cong; Teng, Ganghui; Dimian, Adel F.; and Wang, Daozhang, 5,700,882, Cl. 525-440.000.
Dimond, Randall L.: *See—*
Pahuski, Edward E.; Dimond, Randall L.; Priest, John H.; Zandt, Lisa; Stebnitz, Kathleen K.; and Mendoza, Leopoldo G., 5,700,645, Cl. 435-6.000.
Ding, Lily: *See—*
Nowak, Edward D.; Loh, Ying-Tsong; and Ding, Lily, 5,700,717, Cl. 437-192.000.
Dingeldein, Mark S.: *See—*
Oury, Robert F.; Dingeldein, Mark S.; Ledger, Alan S.; and Gallione, Joseph P., 5,699,878, Cl. 187-234.000.
Dingwall, Andrew Gordon Francis: *See—*
Huq, Ruquiya Ismat Ara; and Dingwall, Andrew Gordon Francis, 5,701,136, Cl. 345-100.000.
Dinkel, Dieter: *See—*
Steffes, Helmut; Dinkel, Dieter; Vogel, Gunther; and Volz, Peter, 5,700,071, Cl. 303-119.200.
Dinwiddie, John Monroe, Jr.: *See—*
Baker, Ernest Dysart; Dinwiddie, John Monroe, Jr.; Grice, Lonnie Edward; Joyce, James Maurice; Loffredo, John Mario; and Sanderson, Kenneth Russell, 5,701,502, Cl. 395-800.000.
Dion, Alain: *See—*
Masse, Robert; Dion, Alain; Bessette, Robert; and Tran, Khiem, 5,700,494, Cl. 425-131.100.
Dion, Robert E.; and Ford, Norman C., Jr., to Precision Detectors, Inc. High temperature light scattering measurement device comprising a rigid extension tube. 5,701,176, Cl. 356-338.000.
DiScala, Luciano: *See—*
Ida, Frank; and DiScala, Luciano, 5,699,920, Cl. 215-11.300.
Discovision Associates: *See—*
Lewis, David E.; and Murphy, Kent T., 5,700,979, Cl. 174-117.00F.

Dittrich, Frank, to Leica AG. Method for stabilizing the directional display of magnetic compasses. 5,701,259, Cl. 364-571.010.
Dix, Connie K.: *See*—
Sheiness, Diana K.; Adams, Trevor H.; Stamm, Michael R.; Cangelosi, Gerard A.; Britschgi, Theresa B.; and Dix, Connie K., 5,700,636, Cl. 435-6.000.
Dixon, Gary W. Processed product for skin and hair treatment. 5,700,457, Cl. 424-78.020.
Djuzhev, Georgy Andreevich: *See*—
Gerasimov, Jury Vasilievich; Grinberg, Jury Moiseevich; Djuzhev, Georgy Andreevich; Kallistov, Anatoly Anatolievich; Kurilenko, Vladimir Iliich; and Rakhovsky, Vadim Izrailovich, 5,701,057, Cl. 315-111.210.
Dlugokecki, Joseph J., to Silicon Packaging Technology. Method for packaging an integrated circuit using a reconstructed package. 5,700,697, Cl. 437-8.000.
DNA Plant Technology Corporation: *See*—
Mudahar, Gurmail, 5,700,506, Cl. 426-316.000.
DNB Dataware Sciences, Inc. Technologies: *See*—
Leyen, Thomas; Sheldrup, Ronald; Burks, Warren; and Macias, Moises, 5,701,338, Cl. 379-58.000.
Do, Cuong D.; Ha, Nhut T.; and Butryn, Joseph A., to Citicorp Development Center, Inc. Personal computer enclosure with peripheral device mounting system. 5,701,231, Cl. 361-683.000.
Do, Mi Sun: *See*—
Jeon, Byung Chun; Do, Mi Sun; Park, Chun Kwan; Oh, Chang Whan; and Kim, Young Sun, 5,701,300, Cl. 370-392.000.
Doan, Trung Tri: *See*—
Sandhu, Gurtej S.; and Doan, Trung Tri, 5,700,180, Cl. 451-5.000.
Dobashi, Akihiko: *See*—
Kimura, Fujimi; Tanaka, Toyoaki; Dobashi, Akihiko; and Abe, Takashi, 5,700,381, Cl. 216-22.000.
Dobashi, Toshio: *See*—
Fukuhara, Toru; Sosa, Toshio; Dobashi, Toshio; Sasagaki, Nobuaki; and Hara, Masaharu, 5,701,519, Cl. 396-48.000.
Döfnäs, Lars; and Hyttinen, Mats, to Asea Brown Boveri AB. Recovery of transmitted power in an installation for transmission of high-voltage direct current. 5,701,241, Cl. 363-35.000.
Doi, Takayuki: *See*—
Natsugari, Hideaki; Ikeda, Hitoshi; Ishimaru, Takenori; and Doi, Takayuki, 5,700,810, Cl. 514-307.000.
Dolan, John M.; and Beasley, Andrew S., to PCS Solutions, LLC. Modular antenna driver including removable modules each characteristic of a handset type. 5,701,579, Cl. 455-3.100.
Dolezal, Anthony James: *See*—
Koda, Rikki; and Dolezal, Anthony James, 5,701,189, Cl. 359-172.000.
Doll, Ronald J.; and Njoroge, F. George, to Schering Corporation. Tricyclic amide and urea compounds useful for inhibition of G-protein function and for treatment of proliferative diseases. 5,700,806, Cl. 514-290.000.
Dolle, Volker; Rohrmann, Jürgen; Winter, Andreas; and Antberg, Martin, to Hoechst Aktiengesellschaft. Polymer having long isotactic sequences and randomly-distributed ethylene content obtained by polymerizing propylene in presence of specific catalysts. 5,700,896, Cl. 526-351.000.
Dollinger, Horst: *See*—
Schnorrenberg, Gerd; Esser, Franz; Dollinger, Horst; Jung, Birgit; Speck, Georg; and Burger, Erich, 5,700,827, Cl. 514-414.000.
Domenella, David D. Dental instrument sharpening system. 5,700,184, Cl. 451-194.000.
Donaldson Company, Inc.: *See*—
Foo, Chong-Kim, 5,700,304, Cl. 55-337.000.
Doppler, Clemens: *See*—
Trauth, Bernhard; Hinzpeter, Matthias; Doppler, Clemens; and Russmann, Eberhard, 5,700,639, Cl. 435-6.000.
Dornbush, David: *See*—
Erickson, Chad; Dornbush, David; and Finn, John, 5,699,722, Cl. 99-330.000.
Dorricott, Martin Rex: *See*—
Richards, John William; and Dorricott, Martin Rex, 5,701,163, Cl. 348-578.000.
Dorsch, Dieter: *See*—
Gericke, Rolf; Dorsch, Dieter; Baumgarth, Manfred; Minck, Klaus-Otto; and Beier, Norbert, 5,700,839, Cl. 514-618.000.
Osswald, Mathias; Dorsch, Dieter; Moderski, Werner; Wilm, Claudia; Schmitges, Claus J.; and Christadler, Maria, 5,700,807, Cl. 514-291.000.
Dorward, Sean Matthew; and Johnston, James David, to Lucent Technologies, Inc. Window switching based on interblock and intrablock frequency band energy. 5,701,389, Cl. 395-2.120.
Dosmann, Andrew: *See*—
Boiarski, Anthony; and Dosmann, Andrew, 5,701,181, Cl. 356-446.000.
Doughty, David T.; Hayden, Richard A.; Cobes, John W., III; and Matviya, Thomas M., to Calgon Carbon Corporation. Purification of air in enclosed spaces. 5,700,436, Cl. 423-210.000.
Douglass, Stephen M.: *See*—
Taffe, Norman P.; Douglass, Stephen M.; and Nazarian, Hagop, 5,701,092, Cl. 326-41.000.
Dover Corp.: *See*—
Thomson, Jack Gall, 5,699,823, Cl. 137-68.150.
Dover Industries Limited: *See*—
Huspeka, John A.; and Calcagni, Peter L., 5,699,959, Cl. 229-125.260.
Dow Chemical Company, The: *See*—
Hahnfeld, Jerry L.; Bee, Timothy G.; Kirkpatrick, Donald E.; Tung, Lu Ho; and Pike, William C., 5,700,887, Cl. 526-182.000.
Hucul, Dennis A.; and Hahn, Stephen F., 5,700,878, Cl. 525-333.300.
Pham, Hoang T.; Strait, Chad A.; and Kirk, Richard O., 5,700,885, Cl. 525-534.000.
DowElanco: *See*—
Van Heertum, John C.; Kleschick, William A.; Arndt, Kim E.; Costales, Mark J.; Ehr, Robert J.; Bradley, Kimberly Brubaker; Reifschneider, Walter; Benkö , Zoltan; Ash, Mary Lynne; and Jachetta, John J., 5,700,940, Cl. 546-119.000.
Downey, Walter J.; Sutterlin, Philip H.; Stewart, J. Marcus; and Hurlbut, Amy O., to Echelon Corporation. Apparatus for powering a transmitter from a switched leg. 5,701,240, Cl. 363-35.000.
Downing, David. Cushioning and protection apparatus for a chair armrest. 5,700,053, Cl. 297-227.000.
Doyle, Mark C.: *See*—
Sancoff, Gregory E.; Doyle, Mark C.; and Field, Frederic P., 5,700,245, Cl. 604-145.000.
Dr. Reddy's Research Foundation: *See*—
Vyas, Krishnamurthi; Prabhakar, Chebiyyam; Rao, Sreenivas Dharmaraja; Sarma, Mamillapalli Ramabadhra; Reddy, Om Gaddam; Ramanujam, Rajagopalan; and Chakrabarti, Ranjan, 5,700,820, Cl. 514-369.000.
Draftex Industries, Limited: *See*—
Backes, Heinz-Peter; and Andrzejewski, Heinz, 5,699,603, Cl. 29-450.000.
Renzo, Bernard; Robinault, Michel; and Urbain, Didier, 5,700,498, Cl. 425-532.000.
Dralle-Voss, Gabriele: *See*—
Schuhmacher, Rudolf; Dralle-Voss, Gabriele; Oppenlaender, Knut; Wegner, Brigitte; and Hohmann, Andreas, 5,700,351, Cl. 162-75.000.
Drapier, Julien: *See*—
Jakubicki, Gary; McCandish, Elizabeth; Zyzyck, Len; and Drapier, Julien, 5,700,773, Cl. 510-426.000.
Drappel, Stephan V.: *See*—
Pontes, Fatima M.; Sacripante, Guerino G.; Drappel, Stephan V.; Paine, Anthony J.; and Kovacs, Gregory J., 5,700,316, Cl. 106-31.580.
Dreier, Loren Christopher, to ZF Friedrichshafen AG. Oil-slinger device provided with a projection engaging a mating receiver formed in a transmission housing. 5,699,877, Cl. 184-11.200.
Drew, Shawn Daren: *See*—
Harris, Brent Alan; Drew, Shawn Daren; and Rybolt, Arnold Carl, 5,700,165, Cl. 439-621.000.
Dreyer, John F., Jr.; Bradshaw, Thomas I.; Burns, David M.; Pavelka, Lee A.; and Orensteen, Bruce D., to Minnesota Mining and Manufacturing Company. Line light source including fluorescent colorant. 5,700,077, Cl. 362-32.000.
Dries, John E.: *See*—
Edwards, James M.; and Dries, John E., 5,700,329, Cl. 134-10.000.
Droste, Timothy A., to Ford Global Technologies, Inc. Hydraulic lubrication control system for an automatic transmission. 5,700,226, Cl. 477-156.000.
DSM N.V.: *See*—
Wolters, Henricus F. W.; Lane, Samuel L.; Buijs, Wim; Haasen, Nicolaas F.; and Herkes, Frank E., 5,700,934, Cl. 540-538.000.
Du, Cong: *See*—
Jones, Frank N.; Du, Cong; Teng, Ganghui; Dimian, Adel F.; and Wang, Daozhang, 5,700,882, Cl. 525-440.000.
Du Pont de Nemours, E. I., and Company: *See*—
Blair, Leslie Mitchell, 5,700,889, Cl. 526-247.000.
Bloom, Joy Sawyer, 5,700,863, Cl. 524-406.000.
Chou, Richard Tien-Hua, 5,700,890, Cl. 526-272.000.
Kilama, John Jolly, 5,700,761, Cl. 504-221.000.
Mehra, Vinodkumar; and Fish, Robert Benham, Jr., 5,700,412, Cl. 264-143.000.
Mukohyama, Atsushi, 5,700,857, Cl. 524-290.000.
Rodrigues, Allan Blase Joseph, 5,700,515, Cl. 427-140.000.
Shiflett, Mark Brandon; and Yokozeki, Akimichi, 5,700,388, Cl. 252-67.000.
Tabb, David Leo, 5,700,866, Cl. 524-520.000.
Du, Wei-Jen Jim: *See*—
Cheng, Yiu-Wah Eric; Du, Wei-Jen Jim; and Huang, Shou-Yuan Richard, 5,701,414, Cl. 395-200.090.
Dubief, Claude; and Cauwet, Daniele, to L'Oreal. Compositions for the treatment and protection of hair, based on ceramide and/or glycoceramide and on polymers containing cationic groups. 5,700,456, Cl. 424-70.170.
Duck, Gary S.; Cheng, Yihao; and Abe, Koichi, to JDS Fitel Inc. Method and system for aligning of optical elements. 5,701,375, Cl. 385-74.000.
Duerr, Wilhelm, to Siemens Aktiengesellschaft. Mammography antenna arrangement for NMR examinations of a female breast. 5,699,802, Cl. 128-653.500.
Duffin, Robert L.: *See*—
Shin, Hank Hukyoo; Tracy, Clarence J.; Duffin, Robert L.; Freeman, John L., Jr.; Grivna, Gordon; and Wilson, Syd R., 5,700,721, Cl. 437-198.000.
Dufraisse, Charles, to Societe C.G.A.O. Apparatus for collecting and transporting bales and for feeding a bale wrapping machine. 5,700,124, Cl. 414-111.000.
Dugan, Joseph T., to Spancrete Industries, Inc. Lifeline anchor. 5,699,875, Cl. 182-3.000.
Dulong, Carole: *See*—

Glew, Andrew F.; Mennemeier, Larry M.; Peleg, Alexander D.; Bistry, David; Mittal, Millind; Dulong, Carole; Kowashi, Eiichi; Eitan, Benny; Lin, Derrick; and Vakkalagadda, Ramamohan R., 5,701,508, Cl. 395-800.000.
Duly Research Inc.: *See*—
Yu, David U. L.; and Bullock, Donald L., 5,701,317, Cl. 372-5.000.
Dumler, Norbert; and Fellner, Bernd, to georg karl geka-brush GmbH. Cleaning device. 5,699,578, Cl. 15-167.100.
Dunbar & Miller: *See*—
Dunbar, Lance A.; and Miller, E. Anthony, 5,700,182, Cl. 451-45.000.
Dunbar, Lance A.; and Miller, E. Anthony, to Dunbar & Miller. Apparatus and method for automated honing of elongated straight-edged cutting blades. 5,700,182, Cl. 451-45.000.
Duncan, Chris: *See*—
Capson, Brian; Cherry, Wes; Devaan, Jon; Duncan, Chris; Fowkes, Raymond E.; Graham, Christopher E.; James, Lisa R.; and McGuire, Timothy W., Jr., 5,701,499, Cl. 395-764.000.
Duncan, Kathleen Anne, to Seagate Technology, Inc. System including ATA sequencer microprocessor which executes sequencer instructions to handle plurality of real-time events allowing to perform all operations without local microprocessor intervention. 5,701,450, Cl. 395-595.000.
Dunn, Donald C., to Corrosion Engineering, Inc. Screen for vibrating material sorting apparatus. 5,699,918, Cl. 209-397.000.
Dunn, John C.; and Foltz, Forrest C., to Microsoft Corporation, Inc. Method and system for transitioning the network mode of a workstation. 5,701,491, Cl. 395-712.000.
Dunn, Stephen Alan, deceased (by Alice Catherine Dunn, independent administratrix): *See*—
Chong, Ku Ho; Crockett, Charles Hayden, Jr.; Dunn, Stephen Alan, deceased; Hoebener, Karl Grant; and McMaster, Michael George, 5,699,613, Cl. 29-852.000.
Dupart, Pierre: *See*—
Desjardins, Jean-Jacques; and Dupart, Pierre, 5,700,512, Cl. 426-557.000.
DuPont-Mitsui Fluorochemicals Co., Ltd.: *See*—
Ogura, Masatsune; Chiba, Shizuo; and Ohtera, Kayoko, 5,700,859, Cl. 524-314.000.
Dupuy, Pierre, to Alcatel Mobile Communication France. Cellular mobile radio system having a frequency reuse plan with partially identical patterns. 5,701,584, Cl. 455-33.100.
Duran, John A., to Avibank Mfg., Inc. Vehicle roof rack assembly. 5,699,944, Cl. 224-326.000.
Durazzani, Piero, to Electrolux Zanussi Elettrodomestici S.p.A. Washing tub of a clothes washing machine. 5,699,682, Cl. 68-140.000.
Dusserre-Telmon, Guy Franck Paul: *See*—
Bainachi, Daniel Olivier; Dusserre-Telmon, Guy Franck Paul; and Plona, Daniel Georges, 5,700,011, Cl. 277-65.000.
Dussinger, Thomas Edgar: *See*—
Balling, Edward Norman; Smart, David Clinton; Dussinger, Thomas Edgar; and Zander, Dennis Roland, 5,701,536, Cl. 396-396.000.
Dusza, John P.: *See*—
Albright, Jay Donald; Venkatesan, Aranapakam M.; Dusza, John P.; and Sum, Fuk-Wah, 5,700,796, Cl. 514-220.000.
Duvinage, Frank; Paule, Markus; Krämer, Michael; Rippert, Nils; and Enderle, Christian, to Daimler-Benz AG. Cylinder head for a uniflow-scavenged two-stroke internal-combustion engine. 5,699,765, Cl. 123-315.000.
Dvorak, Richard T.: *See*—
Dvorak, Ryan T.; and Dvorak, Richard T., 5,699,864, Cl. 173-91.000.
Dvorak, Ryan T.; and Dvorak, Richard T. Marine anchoring apparatus. 5,699,864, Cl. 173-91.000.
Dwars, Udo: *See*—
Baumann, Harald; Dwars, Udo; Savariar-Hauck, Celin; and Timpe, Hans-Joachim, 5,700,619, Cl. 430-175.000.
Dwyer, Patricia A.: *See*—
Bucks, Rodney R.; Dwyer, Patricia A.; Tombs, Thomas N.; Vreeland, William B.; Zeman, Robert E.; and May, John W., 5,701,567, Cl. 399-302.000.
Dykert, John: *See*—
Olivera, Baldomero M.; Rivier, Jean E.F.; Cruz, Lourdes J.; Abogadie, Fe; Hopkins, Chris E.; Dykert, John; and Torres, Josep L., 5,700,778, Cl. 514-12.000.
Dykhno, Igor S.; Krivtsun, Igor U.; and Ignatchenko, Georgi M. Combined laser and plasma arc welding torch. 5,700,989, Cl. 219-121.450.
Dynamic Feeds, Inc.: *See*—
Allred, Robert T., 5,699,688, Cl. 72-20.500.
Dynamics Imaging, Inc.: *See*—
Godik, Eduard E., 5,699,797, Cl. 128-653.100.
Dziendziel, Randolph J.: *See*—
Brown, Edward J.; Baldasaro, Paul F.; and Dziendziel, Randolph J., 5,700,332, Cl. 136-253.000.
E. I. DuPont de Nemours & Company: *See*—
Wolters, Henricus F. W.; Lane, Samuel L.; Buijs, Wim; Haasen, Nicolaas F.; and Herkes, Frank E., 5,700,934, Cl. 540-538.000.
E. Kertscher S.A.: *See*—
Buluschek, Bruno, 5,699,660, Cl. 57-293.000.
EA Technology Limited: *See*—
Counsell, John M.; and Reeves, John H., 5,700,993, Cl. 219-483.000.
Eastman Kodak Company: *See*—
Anderson, Charles C.; Steinwachs, Lawrence J.; and Schum, Gary W., 5,700,623, Cl. 430-256.000.
Balling, Edward Norman; Smart, David Clinton; Dussinger, Thomas Edgar; and Zander, Dennis Roland, 5,701,536, Cl. 396-396.000.
Bucks, Rodney R.; Dwyer, Patricia A.; Tombs, Thomas N.; Vreeland, William B.; Zeman, Robert E.; and May, John W., 5,701,567, Cl. 399-302.000.
Eshelman, Lyn Marie; Miller, David Darrell; and Levy, David Howard, 5,700,608, Cl. 430-20.000.
Farruggia, Giuseppe; Hatwar, Tukaram K.; and Cunningham, Michael P., 5,700,540, Cl. 428-641.000.
Furlani, Edward P.; Chatterjee, Dilip K.; and Ghosh, Syamal K., 5,700,411, Cl. 264-125.000.
Fyson, John Richard; Rider, Christopher Barrie; Coldrick, Philip; and Menton, Janet Linda, 5,701,545, Cl. 396-626.000.
Grace, Jeremy; Gerenser, Louis J.; Chen, Janglin; and Riecke, Edgar E., 5,700,577, Cl. 422-420.000.
Hashish, Mohamed Ahmed; Crowe, David Arthur; and Armstrong, Neil Dean, 5,700,181, Cl. 451-40.000.
Hoff, Joseph W.; Finnicum, Douglas S.; and Weinstein, Steven J., 5,700,524, Cl. 427-402.000.
Jeffers, Frederick John, 5,700,594, Cl. 428-694.0BA.
Lofftus, Kevin D.; Hilbert, Thomas K.; Roets, David A.; and Livadas, Jerry E., 5,701,550, Cl. 399-44.000.
Lok, Roger; and White, Weimar Weatherly, 5,700,631, Cl. 430-605.000.
Lungershausen, Arnold; and Holden, Carl Lawrence, 5,701,015, Cl. 250-495.100.
Meyers, Mark M., 5,701,005, Cl. 250-226.000.
Regan, Michael T.; and Alexandrovich, Peter S., 5,700,611, Cl. 430-45.000.
Reibl, Michael, 5,701,535, Cl. 396-373.000.
Rosenburgh, John Howard; Piccinino, Ralph Leonard, Jr.; and Patton, David Lynn, 5,701,540, Cl. 396-565.000.
Roy, Carl Wilson; and Schempp, John Adams, Jr., 5,701,171, Cl. 355-76.000.
Stephany, Thomas M.; Mey, William; and Furlani, Edward P., 5,701,552, Cl. 399-53.000.
Eaton Corporation: *See*—
Fischer, Kenneth M.; and Puhalla, Craig J., 5,700,985, Cl. 200-50.010.
Eaton, L. Daniel, to University of Arkansas, The Board of Trustees of the. Breast prosthesis. 5,700,288, Cl. 623-7.000.
Ebara Corporation: *See*—
Fujii, Kanenaga; Kiuchi, Masato; Nagasaka, Hiroshi; Kimura, Yoshikazu; and Tsuchiya, Naoki, 5,700,546, Cl. 428-156.000.
Ebdrup, Søren: *See*—
Schneider, Palle; Conrad, Lars Sparre; Ebdrup, Søren; and Yde, Birgitte, 5,700,769, Cl. 510-305.000.
Eberlein, Ernst: *See*—
Herre, Jürgen; Grill, Berhard; Eberlein, Ernst; Brandenburg, Karlheinz; and Seitzer, Dieter, 5,701,346, Cl. 381-18.000.
Ebner, Cynthia L.: *See*—
Speer, Drew V.; Roberts, William P.; Morgan, Charles R.; and Ebner, Cynthia L., 5,700,554, Cl. 428-220.000.
Echelon Corporation: *See*—
Downey, Walter J.; Sutterlin, Philip H.; Stewart, J. Marcus; and Hurlbut, Amy O., 5,701,240, Cl. 363-35.000.
Echizen, Hiroshi: *See*—
Takatsu, Kazumasa; Kurokawa, Takashi; Echizen, Hiroshi; Koganei, Akio; Sugiyama, Shuichiro; and Adachi, Toshio, 5,700,326, Cl. 118-723.0MW.
Edberg, Donald L., to McDonnell Douglas Corporation. Passive non-contacting centering system. 5,701,113, Cl. 335-285.000.
Edgington, Garry J.; and Ryan, Christopher M., to H. B. Fuller Licensing & Financing Inc. Biodegradable/compostable hot melt adhesives comprising polyester of lactic acid. 5,700,344, Cl. 156-336.000.
Edwards, James M.; and Dries, John E., to White Consolidated Industries, Inc. Filter standpipe for dishwasher. 5,700,329, Cl. 134-10.000.
Edwards, Michael G.: *See*—
Ford, Michael; and Edwards, Michael G., 5,700,977, Cl. 174-64.000.
Edwards, Peter S. Automated slide staining system. 5,700,346, Cl. 156-357.000.
Ehnström, Lars: *See*—
Lee, Hyosong; and Ehnström, Lars, 5,700,378, Cl. 210-771.000.
Ehr, Robert J.: *See*—
Van Heertum, John C.; Kleschick, William A.; Arndt, Kim E.; Costales, Mark J.; Ehr, Robert J.; Bradley, Kimberly Brubaker; Reifschneider, Walter; Benkö , Zoltan; Ash, Mary Lynne; and Jachetta, John J., 5,700,940, Cl. 546-119.000.
Ehret, Aloyse, to Agrano AG. Process for preparing a biomass, use of the biomass so prepared, and panification ferment. 5,700,684, Cl. 435-255.200.
Eichhorn, Jörg: *See*—
Bongers-Ambrosius, Hans-Werner; and Eichhorn, Jörg, 5,700,018, Cl. 279-19.400.
Eichhorn, Mathias; and Elsaesser, Andreas, to Agfa-Gevaert AG. Polymers and photosensitive mixture prepared therewith. 5,700,621, Cl. 430-192.000.
Eiden, Glen P.: *See*—
Braseth, David L.; Eiden, Glen P.; and Smith, Ronald Q., 5,701,473, Cl. 395-621.000.
Eigeldinger, Norbert: *See*—
Storz, Achim; and Eigeldinger, Norbert, 5,701,593, Cl. 455-70.000.
Eipper, Jürgen: *See*—

Koch, Norbert; Böhm, Kurt; Schefcsik, Nikolaus; and Eipper, Jürgen, 5,699,884, Cl. 188-196.00B.
Eisai Chemical Co., Ltd.: *See—*
Urawa, Yoshio; Furukawa, Ken; Shimizu, Toshikazu; Yamagishi, Yoji; Tsurugi, Tomio; and Ichino, Tomio, 5,700,938, Cl. 546-14.000.
Eisai Co., Ltd.: *See—*
Urawa, Yoshio; Furukawa, Ken; Shimizu, Toshikazu; Yamagishi, Yoji; Tsurugi, Tomio; and Ichino, Tomio, 5,700,938, Cl. 546-14.000.
Eisciat Ltd.: *See—*
Zhu, Gang, 5,701,074, Cl. 324-307.000.
Eisenmann Corporation: *See—*
Sommery, Geoffrey, 5,700,433, Cl. 422-171.000.
Eitan, Benny: *See—*
Glew, Andrew F.; Mennemeier, Larry M.; Peleg, Alexander D.; Bistry, David; Mittal, Millind; Dulong, Carole; Kowashi, Eiichi; Eitan, Benny; Liu, Derrick; and Vakkalagadda, Ramamohan R., 5,701,508, Cl. 395-800.000.
Electricite de France Service National: *See—*
Bloch, Didier; Le Cras, Frédéric; and Strobel, Pierre, 5,700,442, Cl. 423-599.000.
Electrolux Zanussi Elettrodomestici S.p.A.: *See—*
Durazzani, Piero, 5,699,682, Cl. 68-140.000.
Electronic Development, Inc.: *See—*
Rogers, Wesley A., 5,701,082, Cl. 324-628.000.
Electronics and Telecommunications Research Institute: *See—*
Jeon, Byung Chun; Do, Mi Sun; Park, Chun Kwan; Oh, Chang Whan; and Kim, Young Sun, 5,701,300, Cl. 370-392.000.
Electrosource, Inc.: *See—*
Baer, Jose T.; Davis, Bill C.; and Blanyer, Richard J., 5,701,068, Cl. 320-15.000.
El-Fakir, Linda: *See—*
Hadtke, Frederick B.; El-Fakir, Linda; and Rosen, Greg M., 5,699,620, Cl. 30-452.000.
Eli Lilly and Company: *See—*
Baker, Jeffrey Clayton; Moser, Brian A.; and Shrader, Warren E., 5,700,904, Cl. 530-305.000.
Calnek, David S.; and Grinnell, Brian W., 5,700,815, Cl. 514-324.000.
Chance, Ronald E.; DiMarchi, Richard D.; Frank, Bruce H.; and Shields, James E., 5,700,662, Cl. 435-69.400.
Fisher, Jack W.; Hatfield, Lowell D.; Hoying, Richard C.; and Ray, James E., 5,700,933, Cl. 540-364.000.
Elliott, Daniel S.: *See—*
Kahr, Bart; Jang, Sei-Hum; and Elliott, Daniel S., 5,701,323, Cl. 372-54.000.
Ellis, Richard W.: *See—*
Silence, Scott M.; Creatura, John A.; Hsieh, Bing R.; Ziolo, Ronald F.; and Ellis, Richard W., 5,700,615, Cl. 430-106.600.
Ellsworth, Scott P. Atomizing and mixing nozzle for humidification process. 5,699,983, Cl. 244-118.500.
Elsaesser, Andreas: *See—*
Eichhorn, Mathias; and Elsaesser, Andreas, 5,700,621, Cl. 430-192.000.
EMAG-Maschinen Vertriebs- und Service GmbH: *See—*
Hessbrüggen, Norbert; and Steinbach, Heinz, 5,699,598, Cl. 29-27.00C.
Embrex, Inc.: *See—*
Phelps, Patricia V.; and Bryan, Thomas E., 5,699,751, Cl. 119-6.800.
Emerson Electric Co.: *See—*
Carodiskey, Thomas J., 5,699,803, Cl. 128-640.010.
Horst, Gary E.; and French, Alan P., 5,701,044, Cl. 318-701.000.
Robertson, Walter D., III, 5,699,995, Cl. 251-129.150.
Emmerling, Winfried: *See—*
Haver, Thomas; Friese, Carsten; Emmerling, Winfried; Kux, Michael; and Motzkat, Kerstin, 5,700,891, Cl. 526-301.000.
Emmert, Steven C.; Lundell, Louis J.; and Murray, Michael P., to Motorola, Inc. Uninterruptible power supply. 5,701,244, Cl. 363-146.000.
Emory University: *See—*
Liotta, Dennis C.; Schinazi, Raymond F.; and Choi, Woo-Baeg, 5,700,937, Cl. 544-317.000.
EMS-Inventa AG: *See—*
Hewel, Manfred; and Dalla Torre, Hans, 5,700,900, Cl. 528-335.000.
Emshoff, Horst-Werner; Intichar, Lutz; and Schell, Hermann, to Siemens Aktiengesellschaft. Process and device for monitoring the temperature of an electric generator. 5,701,044, Cl. 310-54.000.
Encomech Engineering Services Ltd.: *See—*
Laws, William Robert; and Reed, Geoffrey Ronald, 5,699,694, Cl. 72-200.000.
End, Lutz; Horn, Dieter; and Lueddecke, Erik, to BASF Aktiengesellschaft. Production of fine particle dye or drug preparations. 5,700,471, Cl. 424-400.000.
Enderle, Christian: *See—*
Davinage, Frank; Paule, Markus; Krämer, Michael; Rippert, Nils; and Enderle, Christian, 5,699,765, Cl. 123-315.000.
Enders, Mark L., to Morton International, Inc. Airbag module mounting bracket with bendable mounting arms. 5,700,029, Cl. 280-728.200.
Endo, Isao; Komatsu, Toru; Sato, Yotaro; Nomori, Hiroyuki; Shigeta, Kunio; and Onodera, Masahiro, to Konica Corporation. Multi-color image forming apparatus having high developability without fogging and without mixing of colors. 5,701,553, Cl. 399-55.000.
Enea, Vincenzo: *See—*
Arnot, David E.; Enea, Vincenzo; Nussenzweig, Ruth S.; and Nussenzweig, Victor, 5,700,906, Cl. 530-324.000.
Engelhard-Clal SAS: *See—*
Guerlet, Jean-Paul; and Lambert, Claude, 5,699,680, Cl. 66-202.000.
Engelstoft, Mogens: *See—*
Biere, Helmut; Huth, Andreas; Rahtz, Dieter; Schmiechen, Ralph; Seidelmann, Dieter; Kehr, Wolfgang; Schneider, Herbert Hans; Engelstoft, Mogens; Hansen, Bondo John; Waetjen, Frank; and Honoré , Tage, 5,700,808, Cl. 514-292.000.
Enokido, Masashi: *See—*
Ikoma, Munehisa; Akutsu, Norikatsu; Enokido, Masashi; Yoshii, Fumihiko; Kaiya, Hideo; and Tsuda, Shingo, 5,700,596, Cl. 429-206.000.
Enomoto, Takaaki: *See—*
Ogawa, Kazuo; Enomoto, Takaaki; Kawai, Masato; Kato, Minoru; and Sato, Kunihito, 5,701,245, Cl. 364-424.046.
Enslen, Mark Y. A.: *See—*
Chauffard, Francoise; Enslen, Mark Y. A.; and Tachon, Pierre, 5,700,484, Cl. 424-496.000.
Entenmann, Gunther: *See—*
Hurst, Achim; Winkler-Gwienek, Wladis; Buchholz, Berthold; Bendix, Dieter; and Entenmann, Gunther, 5,700,901, Cl. 528-354.000.
Environment, Canada, Her Majesty the Queen in right of, as represented by the Minister of the: *See—*
Murphy, Thomas, 5,700,685, Cl. 435-262.500.
Epilogics, LP: *See—*
Gadd, Craig T., 5,699,889, Cl. 192-35.000.
Brard, Francis Albert; and Ratajski, Michel Paul, to Grandjean S.A. Clasp with unfolding buckle. 5,699,590, Cl. 24-71.00J.
Erdahl, Lowell O. Christmas tree waterer. 5,699,634, Cl. 47-40.500.
Ergo Science Incorporated: *See—*
Cincotta, Anthony H.; and Meier, Albert H., 5,700,800, Cl. 514-250.000.
Erickson, Chad; Dornbush, David; and Finn, John. Rapid cooking device. 5,699,722, Cl. 99-330.000.
Ericsson Inc.: *See—*
Croft, Thomas Milton; Dent, Paul Wilkinson; Harte, Lawrence J.; and Solve, Torbjorn, 5,701,329, Cl. 375-224.000.
Weadon, Mark W.; and Patterson, Gregory S., 5,700,042, Cl. 292-80.000.
Erskine, Timothy J., to Becton Dickinson and Company. Catheter-advancement actuated needle retraction system. 5,700,250, Cl. 604-263.000.
Eryurek, Evren, to Rosemount Inc. Temperature sensor transmitter with sensor sheath lead. 5,700,090, Cl. 374-210.000.
Eschenmoser, Albert: *See—*
Altmann, Karl-Heinz; Imwinkelried, René; and Eschenmoser, Albert, 5,700,920, Cl. 536-221.000.
Eshelman, Lyn Marie; Miller, David Darrell; and Levy, David Howard, to Eastman Kodak Company. Process for making photographic emulsions and photographic elements and emulsions containing latent image forming units internally containing sensitizing dye. 5,700,608, Cl. 430-20.000.
Espenschied, Bernd: *See—*
Wagner, Hans; and Espenschied, Bernd, 5,700,881, Cl. 525-440.000.
Esselte N.V.: *See—*
Beadman, Michael Andrew; and Thompson-Bell, Ian, 5,700,098, Cl. 400-615.200.
Esser, Franz: *See—*
Schnorrenberg, Gerd; Esser, Franz; Dollinger, Horst; Jung, Birgit; Speck, Georg; and Burger, Erich, 5,700,827, Cl. 514-414.000.
Essetre di Sella Giovanni: *See—*
Sella, Giovanni, 5,700,117, Cl. 409-164.000.
Estell, David Aaron: *See—*
Bott, Richard Ray; Caldwell, Robert Mark; Cunningham, Brian C.; Estell, David Aaron; Power, Scott Douglas; and Wells, James Allen, 5,700,676, Cl. 435-221.000.
Etablissements Caillau: *See—*
Andre, Michel; and Detable, Pascal, 5,700,041, Cl. 285-325.000.
Ethicon Endo-Surgery, Inc.: *See—*
Brinkerhoff, Ronald J., 5,700,261, Cl. 606-41.000.
Ethicon, Inc.: *See—*
Jamiołkowski, Dennis D.; and Bezwada, Rao S., 5,700,583, Cl. 428-482.000.
Ethyl Petroleum Additives Limited: *See—*
Walters, David Kenvyn; and Macpherson, Ian, 5,700,764, Cl. 508-338.000.
Eto, Yoshizumi; Murata, Nobuo; Tanabe, Kazuhiro; and Nisikawa, Hiroyuki, to Hitachi Denshi Kabushiki Kaisha. Method for bidirectionally transmitting digital video signal and digital video signal bidirectional transmission system. 5,701,581, Cl. 455-5.100.
Ettel, Victor Alexander; Ambrose, John; Cushnie, Kirt Kenneth; Bell, James Alexander E.; Paserin, Vladimir; and Kalal, Peter Joseph, to Inco Limited. Porous nickel electrode substrate. 5,700,363, Cl. 205-271.000.
Euhus, David M.: *See—*
Morton, Donald L.; Gupta, Rishab K.; and Euhus, David M., 5,700,649, Cl. 435-7.100.
Eun, Kwang Yong: *See—*
Lee, Wook-Seong; Baik, Young-Joon; and Eun, Kwang Yong, 5,700,518, Cl. 427-249.000.
European Computer-Industry Research Centre GmbH: *See—*
Freeston, Michael William, 5,701,467, Cl. 395-611.000.
Eustache, Jean-Pierre: *See—*
Berge, Gilles; Eustache, Jean-Pierre; Princet, Joël; and Bouy, Gilbert, 5,699,582, Cl. 15-250.340.
Evans, David L.; and Evans, Dena K. Outdoor sleeping system with detachable sleeping bag. 5,699,820, Cl. 135-96.000.

Evans, Dena K.: *See—*
Evans, David L.; and Evans, Dena K., 5,699,820, Cl. 135-96.000.
Evans, Douglas: *See—*
Nash, John; and Evans, Douglas, 5,700,277, Cl. 606-213.000.
Evans, Jonathan Paul, to GEC Avery Limited. Dynamic filter. 5,701,261, Cl. 364-724.010.
Evans, Steven L.: *See—*
Caulder, Jerry; Crowley, R. Hugh; Zorner, Paul S.; and Evans, Steven L., 5,700,759, Cl. 504-133.000.
Eveready Battery Company, Inc.: *See—*
Clark, Thomas C., 5,700,299, Cl. 29-623.100.
Everhart, John R.: *See—*
Thompson, Ken J.; Everhart, John R.; Foster, Wayne G.; and Rosenquist, Joel C., 5,699,942, Cl. 223-42.000.
EVVA-Werk Spezialerzeugung von Zylinder- und Sicherheitsschlossern Gesellschaft m.b.H. & Co.: *See—*
Neumayer, Harald; and Krewenka, Roland, 5,699,686, Cl. 70-283.000.
Excell Corporation: *See—*
Nakagawa, Tatsuya; and Ezaki, Yasuo, 5,699,835, Cl. 138-141.000.
Exedy Corporation: *See—*
Ohkubo, Masahiro, 5,700,219, Cl. 475-47.000.
Exxon Chemical Patents Inc.: *See—*
Arjunan, Palanisamy; and White, Donald Andrew, 5,700,871, Cl. 525-74.000.
Ezaki, Takashi: *See—*
Yamauchi, Satoshi; Tamura, Hiroshi; Katooka, Takashi; Tsumura, Naoki; Hikichi, Naoto; Narumi, Chihiro; Ezaki, Takashi; Kudo, Shozo; and Ooguro, Yoshihisa, 5,701,497, Cl. 395-753.000.
Ezaki, Yasuo: *See—*
Nakagawa, Tatsuya; and Ezaki, Yasuo, 5,699,835, Cl. 138-141.000.
Faass, Judith Katherine: *See—*
Cohen, Bernard; Jameson, Lee Kirby; Gipson, Lamar Heath; and Faass, Judith Katherine, 5,700,553, Cl. 428-220.000.
Fabris, Mario. Sleeveless cantilever drive for high torque applications. 5,700,233, Cl. 492-1.000.
Fabry, Thomas: *See—*
Woerner, Bernhard; Haug, Kurt; Fabry, Thomas; Kusserow, Peter; and Jenner, Bert, 5,700,079, Cl. 362-80.000.
Facchin, Daniela; and Frau, Paola. Distribution network system for products and information. 5,701,252, Cl. 364-479.000.
Fahmy, Mohamed A., to K2, Inc. Composite construction material. 5,700,570, Cl. 428-342.000.
Fahrzeugtechnik Ebern GmbH: *See—*
Heubner, Wilhelm, 5,700,067, Cl. 303-9.000.
Fahy, Gregory M.: *See—*
Federowicz, Michael G.; Fahy, Gregory M.; and Wood, Lawrence E., 5,700,828, Cl. 514-419.000.
Fairchild Holding Corp.: *See—*
Myers, Alan R., 5,699,702, Cl. 81-56.000.
Fait, Claudio: *See—*
Bergmann, Konrad; Fait, Claudio; and Läller, Klaus-Jürgen, 5,699,964, Cl. 239-106.000.
Falace, Joseph Philip; and Miller, John David, to Storage Technology Corporation. Gravity feed pass-thru port for automated cartridge library. 5,700,125, Cl. 414-276.000.
Fallgren, Anna: *See—*
Kallin, Harald; and Fallgren, Anna, 5,701,585, Cl. 455-33.200.
Falquier, Dario G.: *See—*
Digonnet, Michel J. F.; Falquier, Dario G.; Wagener, Jefferson L.; and Shaw, H. John, 5,701,318, Cl. 372-6.000.
Fan, Shou-Kong: *See—*
Hill, Darrell; Fan, Shou-Kong; and Khatibzadeh, Ali, 5,700,701, Cl. 437-31.000.
Farnsworth, Jeffrey N.: *See—*
Dao, Giang T.; Tam, Nelson N.; Liu, Gang; and Farnsworth, Jeffrey N., 5,700,602, Cl. 430-5.000.
Farris, Jimmie L. Knife-blade sharpening apparatus. 5,700,189, Cl. 451-555.000.
Farruggia, Giuseppe; Hatwar, Tukaram K.; and Cunningham, Michael P., to Eastman Kodak Company. Optical recording medium. 5,700,540, Cl. 428-641.000.
Fasquel, Didier: *See—*
Marlier, Géry; and Fasquel, Didier, 5,700,990, Cl. 219-121.640.
Fast Action, Inc.: *See—*
Meoni, Frank, 5,700,009, Cl. 273-269.000.
Fausnight, Ronald L.; and Lupyan, David A., to Blue Coral, Inc. Universal auto lotion. 5,700,312, Cl. 106-10.000.
Faust, Raimund Josef; and Lutz, Silvia, to Agfa-Gevaert AG. Process for the production of colored images by an electrophotographic route. 5,700,618, Cl. 430-124.000.
Fazio, Albert; Atwood, Gregory E.; Mi, James O.; and Ruby, Paul, to Intel Corporation. Programming flash memory using distributed learning methods. 5,701,266, Cl. 365-185.030.
Feaster, Fred T. Refractive surgery knife. 5,700,274, Cl. 606-167.000.
Federowicz, Michael G.; Fahy, Gregory M.; and Wood, Lawrence E., to Life Resuscitation Technologies, Inc. Treatment or prevention of anoxic or ischemic brain injury with melatonin-containing compositions. 5,700,828, Cl. 514-419.000.
Fedorovish, Ogurtsov Oleg; and Ivanovich, Kazurov Boris, to LG Electronics Inc. Active matrix liquid crystal display having first and second display electrodes capacitively couple to second and first data buses, respectively. 5,701,166, Cl. 349-38.000.
Fehrer, Ernst. Apparatus for needling a fibrous web. 5,699,596, Cl. 28-115.000.
Feigelson, Gregg Brian; Curran, William V.; and Ziegler, Carl Bernard, to American Cyanamid Company. 4-substituted azetidinones as precursors to 2-substituted-3-carboxy carbapenem antibiotics and a method of producing them. 5,700,930, Cl. 540-200.000.
Feleppa, Richard. Shelter frame connector system. 5,700,102, Cl. 403-170.000.
Feller, A. Daniel; and Cadien, Kenneth C., to Intel Corporation. Slurries and methods for chemical mechanical polish of aluminum and titanium aluminide. 5,700,383, Cl. 216-88.000.
Fellner, Bernd: *See—*
Dumler, Norbert; and Fellner, Bernd, 5,699,578, Cl. 15-167.100.
Fenger, Russell J., to Intel Corporation. Method and apparatus for dynamically loading a driver routine in a computer memory. 5,701,476, Cl. 395-652.000.
Fermann, Martin E., to Imra America, Inc. Method and apparatus for generating ultrashort pulses with adjustable repetition rates from passively modelocked fiber lasers. 5,701,319, Cl. 372-18.000.
Fernandez, Roger. Adjustable anchorage for trusses. 5,699,639, Cl. 52-707.000.
Fernandez, Virgilio Alejandro: *See—*
Wetters, John; Simmons, John Wayne; Fernandez, Virgilio Alejandro; Ahrens, Art; and Carsello, Steve, 5,701,600, Cl. 455-208.000.
Fernyhough, Alan; and Fryars, Michael, to Kabushiki Kaisha Kobe Seiko Sho. Pultrusion process for preparing fiber-reinforced composite rod. 5,700,417, Cl. 264-477.000.
Ferradini, Laurent: *See—*
Hercend, Thierry; Triebel, Frederic; Roman-Roman, Sergio; and Ferradini, Laurent, 5,700,907, Cl. 530-324.000.
Ferret Instruments, Inc.: *See—*
McKinnon, Donald C., 5,700,089, Cl. 374-142.000.
Fey, Peter: *See—*
Mittendorf, Joachim; Fey, Peter; Junge, Bodo; Kaulen, Johannes; Laak, Kai van; Meier, Heinrich; and Schohe-Loop, Rudolf, 5,700,948, Cl. 548-531.000.
Feyerl, Günther, to Textilmaschinenfabrik Dr. Ernst Fehrer Aktiengesellschaft. Apparatus for needling a fibrous web. 5,699,595, Cl. 28-107.000.
Fichtel & Sachs AG: *See—*
Förster, Andreas, 5,699,885, Cl. 188-317.000.
Kundermann, Wolfgang, 5,699,887, Cl. 192-3.260.
Schiffler, Stefan, 5,700,027, Cl. 280-723.000.
Field, Frederic P.: *See—*
Sancoff, Gregory E.; Doyle, Mark C.; and Field, Frederic P., 5,700,245, Cl. 604-145.000.
Fieschi, Jacques: *See—*
Benayoun, Alain; Fieschi, Jacques; Michel, Patrick; and LePennec, Jean-Francois, 5,701,468, Cl. 395-612.000.
Figueria, Robert J., Jr., to Siemens Components, Inc. Method of aligning a light pathway for an optics apparatus. 5,701,007, Cl. 250-231.130.
Figura, William L., to Applied Design Technology, Ltd. Apparatus for grooming fields. 5,699,863, Cl. 172-145.000.
Finbark Oy: *See—*
Saalasti, Timo Tapio, 5,699,573, Cl. 8-156.000.
Fink, David J.: *See—*
Hughes, Kenneth E.; Masterson, David C.; Fink, David J.; Metz, Barbara A.; Pickett, Gordon E.; Gemmer, Paul M.; and Brody, Richard S., 5,700,353, Cl. 162-143.000.
Virnelson, Kevin M.; Hughes, Kenneth E.; Masterson, David C.; Fink, David J.; Metz, Barbara A.; Pickett, Gordon E.; Gemmer, Paul M.; and Brody, Richard S., 5,700,354, Cl. 162-143.000.
Fink, Roland, to Oskar Frech GmbH & Co. Hot-chamber diecasting machine. 5,699,849, Cl. 164-155.400.
Finn, John: *See—*
Erickson, Chad; Dornbush, David; and Finn, John, 5,699,722, Cl. 99-330.000.
Finn, Larry J., to Bedminster Bioconversion Corporation. Odor control system. 5,700,687, Cl. 435-266.000.
Finnicum, Douglas S.: *See—*
Hoff, Joseph W.; Finnicum, Douglas S.; and Weinstein, Steven J., 5,700,524, Cl. 427-402.000.
Finnson, Lawrence M. Multifunctional collapsible shield. 5,700,022, Cl. 280-152.300.
Fischer, Dan E.; and Jensen, Steven D., to Ultradent Products? Inc. Syringe-deliverable neutralizing barrier. 5,700,148, Cl. 433-217.100.
Fischer, Frank: *See—*
Merten, Gerhard; and Fischer, Frank, 5,700,061, Cl. 299-43.000.
Fischer, James W.: *See—*
Corrado, Frank C.; Fischer, James W.; Larsen, Gary R.; and Sweet, Ronald W., 5,699,738, Cl. 101-425.000.
Fischer, Kenneth M.; and Puhalla, Craig J., to Eaton Corporation. Interlock latch for electrical operator. 5,700,985, Cl. 200-50.010.
Fischer, Paul James; and Petefish, William George, to W. L. Gore & Associates, Inc. Integrated circuit package. 5,701,032, Cl. 257-692.000.
Fish, Robert Benham, Jr.: *See—*
Mehra, Vinodkumar; and Fish, Robert Benham, Jr., 5,700,412, Cl. 264-143.000.

Fisher & Paykel Limited: *See—*
Johnson, Hugh Griffith, 5,701,047, Cl. 310-254.000.
Fisher Controls International, Inc.: *See—*
Woollums, David E.; and Foust, Gregory L., 5,700,950, Cl. 73-3.000.
Fisher, Gregory J.; and Chi, Chong I., to Harris Corporation. Statistically based current generator circuit. 5,701,097, Cl. 327-538.000.
Fisher, Jack W.; Hatfield, Lowell D.; Hoying, Richard C.; and Ray, James E., to Eli Lilly and Company. Chiral intermediates for the preparation of carbacephems. 5,700,933, Cl. 540-364.000.
Fisher-Price, Inc.: *See—*
Cimerman, Christopher D.; and Long, Jennifer M., 5,700,178, Cl. 446-301.000.
Fitch, Anthony Ronald Leslie, to Raychem Limited. Heat recoverable article. 5,700,528, Cl. 428-34.900.
Fitzpatrick, Timothy D.: *See—*
Goodfellow, Val S.; Marathe, Manoj V.; Whalley, Eric T.; Fitzpatrick, Timothy D.; and Kuhlman, Karen G., 5,700,779, Cl. 514-14.000.
Fix, John William, Jr., to Fusion Bonding Corporation, The. Automated fusion bonding apparatus. 5,699,952, Cl. 228-102.000.
Fleishans, Gary B.; Rudzewicz, Robert G.; and Dale, Michael A., to Chrysler Corporation. Vehicle climate control multiplex system. 5,699,857, Cl. 165-202.000.
Flanagan, Peter F.: *See—*
Ring, Martin D.; Mark, Roger; Flanagan, Peter F.; Brogan, Patrick M.; and Sturges, James R., 5,701,277, Cl. 367-163.000.
Flautt, Martin C.; Adzima, Leonard J.; and Mann, Douglas B., to Owens-Corning Fiberglas Technology, Inc. Sizing composition for glass roving. 5,700,574, Cl. 428-392.000.
Fleck, Thomas M., to NeoPath, Inc. Apparatus for automated urine sediment sample handling. 5,699,794, Cl. 128-633.000.
Fletcher Machine, Inc.: *See—*
Fletcher, M. Ray, 5,700,183, Cl. 451-182.000.
Fletcher, M. Ray, to Fletcher Machine, Inc. Sanding wheel assembly. 5,700,183, Cl. 451-182.000.
Flohr, Thomas, to Siemens Aktiengesellschaft. Fourier reconstruction of computer tomography images which represent a selectable region of the examination subject. 5,701,360, Cl. 382-131.000.
Florida State University: *See—*
Hofer, Kurt G.; and Yang, Li-xi, 5,700,825, Cl. 514-397.000.
Flowers, Edward Max, to Loral Vought Systems Corporation. Laser scanning system with optical transmit/reflect mirror having reduced received signal loss. 5,701,326, Cl. 372-99.000.
Fluidmaster, Inc.: *See—*
McClure, Richard C., 5,699,563, Cl. 4-325.000.
Flutec Fluidtechnische Geräte GmbH: *See—*
Jung, Rudiger; and Bär, Harald, 5,699,714, Cl. 91-439.000.
Flynn, Kathy M.: *See—*
Rath, James; Tran, William Luong-Gia; Flynn, Kathy M.; Tara, Vinai Ming; Koes, Thomas A.; and Nizzo, Vincent J., 5,700,607, Cl. 430-15.000.
FMC Corporation: *See—*
Bestgen, Michael J.; Kramer, Richard B.; Moulden, Daniel P.; Barbee, Chris; and Hibbetts, Bryon, 5,699,894, Cl. 198-678.100.
Focke & Co. (GmbH & Co.): *See—*
Focke, Heinz; and Buse, Henry, 5,699,903, Cl. 206-268.000.
Focke, Heinz; and Buse, Henry, to Focke & Co. (GmbH & Co.). Pack, namely hinge-lid pack. 5,699,903, Cl. 206-268.000.
Foerster, Hans; and Leser, Wolfgang, to Foerster, Hans. Refrigeration method and apparatus. 5,699,672, Cl. 62-86.000.
Fohl, Timothy; Marinelli, Michael Anthony; and Remillard, Jeffrey Thomas, to Ford Global Technologies, Inc. Laser illuminated lighting system. 5,700,078, Cl. 362-32.000.
Foltz, Forrest C.: *See—*
Dunn, John C.; and Foltz, Forrest C., 5,701,491, Cl. 395-712.000.
Fontana, Robert Edward, Jr.; Gurney, Bruce Alvin; Lin, Tsann; Speriosu, Virgil Simon; Tsang, Ching Hwa; and Wilhoit, Dennis Richard, to International Business Machines Corporation. Spin valve magnetoresistive sensor with antiparallel pinned layer and improved exchange bias layer, and magnetic recording system using the sensor. 5,701,223, Cl. 360-113.000.
Foo, Chong-Kim, to Donaldson Company, Inc. Filter with protective shield. 5,700,304, Cl. 55-337.000.
Foody, Brian; Nicholson, Colin; Tolan, Jeffrey; and White, Theresa, to Iogen Corporation. Protease-treated and purified cellulase compositions and methods for reducing backstaining during enzymatic stonewashing. 5,700,686, Cl. 435-263.000.
Ford Global Technologies, Inc.: *See—*
Cook, Roger Joseph; DeVoe, Joseph Paul; Macfarlane, Kevin Douglas; Parks, Daniel Robert; and Gibson, Patrick William, 5,701,063, Cl. 318-469.000.
Droste, Timothy A., 5,700,226, Cl. 477-156.000.
Fohl, Timothy; Marinelli, Michael Anthony; and Remillard, Jeffrey Thomas, 5,700,078, Cl. 362-32.000.
Meckstroth, Richard J., 5,700,212, Cl. 474-70.000.
Sinha, Satyadeo Narain; Varady, Arthur Joseph; and Gilbert, Richard John, 5,700,954, Cl. 73-116.000.
VanSelous, Joseph S.; Haggerty, Judith F.; and Norris, Kevin E., 5,700,218, Cl. 475-12.000.
Yang, Jialin; Leydorf, George Fredric, Jr.; and Anderson, Richard Walter, 5,699,760, Cl. 123-41.740.
Ford, Michael; and Edwards, Michael G. Electrical conduit fixture. 5,700,977, Cl. 174-64.000.
Ford Motor Company: *See—*
BeMent, Bradley Earl; Tiedje, Kevin Mark; and Crawford, Robert Dennis, 5,701,410, Cl. 395-183.190.
Gilliam, Peter H.; and Lumley, David William, 5,699,601, Cl. 29-278.000.
Ford, Norman C., Jr.: *See—*
Dion, Robert E.; and Ford, Norman C., Jr., 5,701,176, Cl. 356-338.000.
Förderer, Karl; Höppner, Klaus; and Fricke, Gerd, to Andreas Stihl. Antivibration device for mounting between a motor unit and a handle unit. 5,699,865, Cl. 173-162.200.
Formtech Enterprises, Inc.: *See—*
Grill, Otto, 5,700,555, Cl. 428-233.000.
Forschungszentrum Jülich GmbH: *See—*
Saurenbach, Frank; and Fuss, Hans-Achim, 5,701,381, Cl. 385-139.000.
Forslund, Kjell, to Sunds Defibrator Industries AB. Mixing device with axially movable shaft for maintenance purposes. 5,700,086, Cl. 366-172.200.
Förster, Andreas, to Fichtel & Sachs AG. Vibration damper with adjustable damping force. 5,699,885, Cl. 188-317.000.
Forster, Franz, to Linde Aktiengesellschaft. Piston for a reciprocating piston machine. 5,699,715, Cl. 92-12.200.
Fort, Wesley C., to Nordson Corporation. Continuous hot melt adhesive applicator. 5,700,322, Cl. 118-50.000.
Fortunak, Joseph, to SmithKline Beecham Corporation. Intermediates useful in camptothecin synthesis. 5,700,939, Cl. 546-116.000.
Foster, Brian W., to United States Surgical Corporation. Surgical instrument package. 5,699,909, Cl. 206-370.000.
Foster, Wayne G.: *See—*
Thompson, Ken J.; Everhart, John R.; Foster, Wayne G.; and Rosenquist, Joel C., 5,699,942, Cl. 223-42.000.
Foundation Nationale de Transfusion Sanguine: *See—*
Schmitthaeusler, Roland; and Bardat, Annie, 5,700,426, Cl. 422-29.000.
Fournier, Yves, to Framatome. Device for fixing in a fluid tight manner a through tube in a dome-shaped wall of a component of a nuclear reactor. 5,700,988, Cl. 219-121.130.
Foust, Gregory L.: *See—*
Woollums, David E.; and Foust, Gregory L., 5,700,950, Cl. 73-3.000.
Fowkes, Raymond E.: *See—*
Capson, Brian; Cherry, Wes; Devaan, Jon; Duncan, Chris; Fowkes, Raymond E.; Graham, Christopher E.; James, Lisa R.; and McGuire, Timothy W., Jr., 5,701,499, Cl. 395-764.000.
Frake, Kevin: *See—*
Babacz, Robert J.; Narendrnath, Kadthala R.; Frake, Kevin; and Baylog, Melissa A., 5,700,327, Cl. 134-1.100.
Framatome: *See—*
Fournier, Yves, 5,700,988, Cl. 219-121.130.
France Telecom: *See—*
Abram, Izo, 5,701,324, Cl. 372-92.000.
Tabbane, Sami; and Moreau, Christophe, 5,701,586, Cl. 455-33.400.
François, Marc Karel Jozef; and Agemans, Christine Frieda Augusta, to Janssen Pharmaceutica, N.V. Sabeluzole oral suspensions. 5,700,814, Cl. 514-321.000.
Frank, Bruce H.: *See—*
Chance, Ronald E.; DiMarchi, Richard D.; Frank, Bruce H.; and Shields, James E., 5,700,662, Cl. 435-69.400.
Frank, Wolfgang: *See—*
Nieling, Andreas; Frank, Wolfgang; Kissel, Holger; Koehler, Reinhard; and Mueller, Werner, 5,700,191, Cl. 454-69.000.
Frankovich, Evelyn Marie: *See—*
Bender, Fredric G.; Mostoller, Charles; and Frankovich, Evelyn Marie, 5,700,507, Cl. 426-332.000.
Franz, Patrick J.: *See—*
Brown, Daniel R.; and Franz, Patrick J., 5,701,142, Cl. 345-168.000.
Frau, Paola: *See—*
Facchin, Daniela; and Frau, Paola, 5,701,252, Cl. 364-479.000.
Fraunhofer-Gesellschaft Zur Foerderung der Angewandten Forschung e.v.: *See—*
Fuchs, Helmut; and Zha, Xuegin, 5,700,527, Cl. 428-34.400.
Fraunhofer-Gesellschaft zur Forderung der Angewandten Forschung e.V.: *See—*
Herre, Jürgen; Grill, Berhard; Eberlein, Ernst; Brandenburg, Karlheinz; and Seitzer, Dieter, 5,701,346, Cl. 381-18.000.
Hund, Kerstin; Klein, Werner; Kördel, Werner; Görtz, Theo; and Schwarzer, Norbert, 5,700,109, Cl. 405-128.000.
Frederiksen, Lene; Anton, Klaus; and van Hoogevest, Peter, to Ciba-Geigy Corporation. Process for the preparation of a liposome dispersion under elevated pressure contents. 5,700,482, Cl. 424-450.000.
Freedman, Melvin S., to Avery Dennison Corporation. Composite facestocks. 5,700,564, Cl. 428-332.000.
Freeman, John L., Jr.: *See—*
Shin, Hank Hukyoo; Tracy, Clarence J.; Duffin, Robert L.; Freeman, John L., Jr.; Grivna, Gordon; and Wilson, Syd R., 5,700,721, Cl. 437-198.000.
Freeman, Michael T.: *See—*
Mills, Shannon E.; Shaffer, Randy; Freeman, Michael T.; Plamondon, Thomas J.; and Oakes, Barry L., Jr., 5,700,147, Cl. 433-98.000.
Freer, Richard J.: *See—*
Zamora, Paul O.; and Freer, Richard J., 5,700,444, Cl. 424-1.690.

Freeston, Michael William, to European Computer-Industry Research Centre GmbH. Computer data storage management system and methods of indexing a dataspace and searching a computer memory. 5,701,467, Cl. 395-611.000.
French, Alan P.: *See—*
Horst, Gary E.; and French, Alan P., 5,701,064, Cl. 318-701.000.
Fricke, Gerd: *See—*
Förderer, Karl; Höppner, Klaus; and Fricke, Gerd, 5,699,865, Cl. 173-162.200.
Friese, Carsten: *See—*
Huver, Thomas; Friese, Carsten; Emmerling, Winfried; Kux, Michael; and Motzkat, Kerstin, 5,700,891, Cl. 526-301.000.
Frisch, Gerhard; and Damo, Zoltan, to Hoechst Aktiengesellschaft. Oil-in-water emulsions. 5,700,472, Cl. 424-405.000.
Fritzinger, Daniel D.; and Hall, Craig R., to Mattel, Inc. Automatically engaging and disengaging gear box assembly. 5,699,869, Cl. 180-65.500.
Froehlich, Franz-Fr; Kluwe, Wolf; and Meltsch, Hans-Juergen, to RXS Kabelgarnituren GmbH. Seal insert for cable connections. 5,700,012, Cl. 277-66.000.
Froeschle, Thomas A.: *See—*
Parison, James A.; Froeschle, Thomas A.; and Maresca, Robert L., 5,701,039, Cl. 310-12.000.
Fromherz, Markus P. J.: *See—*
Webster, Marc W.; Saraswat, Vijay A.; Fromherz, Markus P. J.; Austin, John C.; Rulli, Paul A.; and McCue, Daniel Lawrence, III, 5,701,557, Cl. 399-77.000.
Fryars, Michael: *See—*
Fernyhough, Alan; and Fryars, Michael, 5,700,417, Cl. 264-477.000.
Fryco, Inc.: *See—*
Frye, Lloyd H.; and Zierhut, Clarence, 5,699,908, Cl. 206-355.000.
Frye, Lloyd H.; and Zierhut, Clarence, to Fryco, Inc. Scalpel blade removal and storage apparatus. 5,699,908, Cl. 206-355.000.
Fu, Jian-Min; and Rakhit, Sumanas, to Allelix Biopharmaceuticals, Inc. N-methyl piperazine compounds having dopamine receptor affinity. 5,700,445, Cl. 424-1.810.
Fuchs, Helmut; and Zha, Xuegin, to Fraunhofer-Gesellschaft Zur Foerderung der Angewandten Forschung e.v. Sound-absorbing glass building component or transparent synthetic glass building component. 5,700,527, Cl. 428-34.400.
Fuchs, Hugo; Ritz, Josef; and Neubauer, Gerald, to BASF Aktiengesellschaft. Recovery of caprolactam from oligomers and/or polymers of caprolactam. 5,700,358, Cl. 203-31.000.
Fuchu, Katsuki: *See—*
Matsumoto, Kissei; Fuchu, Katsuki; and Katsuki, Shinji, 5,701,282, Cl. 369-32.000.
Fuji Electric Co., Ltd.: *See—*
Fujishima, Naoto; and Kitamura, Akio, 5,701,026, Cl. 257-510.000.
Kuboyama, Kiminasa; Yokoyama, Shoji; Miyakoshi, Yoshinori; Taniguchi, Hiroya; Tsuruta, Kazuhiro; and Goto, Hisashi, 5,699,655, Cl. 53-540.000.
Nogami, Sumitaka; Kitazawa, Michihiro; and Sato, Katsuhiro, 5,700,613, Cl. 430-58.000.
Fuji Jukogyo Kabushiki Kaisha: *See—*
Hiwatashi, Yutaka; Matsuno, Koji; Takahashi, Akira; and Matsuura, Munenori, 5,700,073, Cl. 303-146.000.
Fuji Kasei Kogyo Kabushiki Kaisha: *See—*
Ishikawa, Yuukou; Nishimoto, Noboru; Ootani, Michio; Tanibe, Tooru; Suzuki, Kazushige; and Kasahara, Kanesuke, 5,700,414, Cl. 264-247.000.
Fuji Oil Co., Ltd.: *See—*
Maeda, Hirokazu; Furuta, Hitoshi; Takahashi, Taro; Takei, Chiemi; Kurita, Hiroko; and Sato, Yoko, 5,700,397, Cl. 252-312.000.
Fuji Photo Film Co., Ltd.: *See—*
Hirai, Hiroyuki; and Mihara, Yuji, 5,700,622, Cl. 430-203.000.
Inoue, Rikio; and Yamada, Sumito, 5,700,630, Cl. 430-399.080.
Kato, Eiichi; Nakazawa, Yusuke; and Ishii, Kazuo, 5,700,612, Cl. 430-49.000.
Kondo, Syunichi; and Fujita, Kazuo, 5,700,849, Cl. 522-16.000.
Nakane, Takanobu; and Morita, Kiyoo, 5,699,973, Cl. 242-345.000.
Okita, Tsutomu; and Ishida, Toshio, 5,700,541, Cl. 428-65.400.
Sakaguchi, Shinji; Aoai, Toshiaki; and Sato, Kenichiro, 5,700,620, Cl. 430-191.000.
Sasayama, Hiroyuki, 5,701,542, Cl. 396-578.000.
Yasui, Mototada, 5,701,538, Cl. 396-512.000.
Fuji Photo Optical Co., Ltd.: *See—*
Ishiguro, Minoru; Iwamoto, Jun'ichi; and Sato, Muneyoshi, 5,701,520, Cl. 396-48.000.
Omiya, Akio; and Kamoda, Takashi, 5,701,523, Cl. 396-83.000.
Fuji PhotoOptical Co. Ltd.: *See—*
Watanabe, Fumio, 5,701,203, Cl. 359-669.000.
Fuji Xerox Co., Ltd.: *See—*
Ikeo, Joji; Ozaki, Masaharu; Tanaka, Tsuyoshi; Itonori, Katsuhiko; and Ishida, Yuusuke, 5,701,500, Cl. 395-779.000.
Koshi, Yutaka; Kimura, Shunichi; and Kamizawa, Koh, 5,701,367, Cl. 382-239.000.
Venable, Dennis L.; and Nagao, Takashi, 5,701,479, Cl. 395-670.000.
Yamashita, Shigeki; Hirayama, Yoshiyuki; and Suzuki, Kazuhiro, 5,701,505, Cl. 395-800.000.
Fujicopian Co., Ltd.: *See—*
Katsuro, Noboru; Suemoto, Toshiro; Mizutani, Yoshihiro; and Shini, Masami, 5,700,552, Cl. 428-214.000.
Suematsu, Hideki, 5,700,584, Cl. 428-484.000.
Fujii, Kanenaga; Kiuchi, Masato; Nagasaka, Hiroshi; Kimura, Yoshikazu; and Tsuchiya, Naoki, to Ebara Corporation; and Agency Of Industrial Science and Technology. Seal or bearing. 5,700,546, Cl. 428-156.000.
Fujii, Masumi; Suda, Taiichiro; Hotta, Yoshitsugu; Kitamura, Koichi; Jinno, Yukihiro; Mimura, Tomio; Shimojo, Shigeru; Iijima, Masaki; and Mitsuoka, Shigeaki, to Kansai Electric Power Co., Inc., The; and Mitsubishi Jukogyo Kabushiki Kaisha. Method for removing carbon dioxide from combustion exhaust gas. 5,700,437, Cl. 423-220.080.
Fujii, Takashi; Shinmura, Satoru; Fujino, Masaru; Mizuno, Shinobu; Sekijima, Takenori; Chikagawa, Osamu; and Takagi, Hiroshi, to Murata Manufacturing Co., Ltd. Magnetostatic wave device with a magnetic field applied parallel to an axis of easy magnetization. 5,701,108, Cl. 333-202.000.
Fujii, Toshikazu, to Kabushiki Kaisha Toshiba. Amplifying circuit with DC voltage feedback to base terminal for magnetic record and playback apparatus. 5,701,103, Cl. 330-290.000.
Fujii, Yasuhiro, to Fujitsu Limited. Semiconductor memory with hierarchical bit lines. 5,701,269, Cl. 365-210.000.
Fujii, Yasuo, to Fujitsu Limited. Trouble surveillance apparatus for a transmission system. 5,701,293, Cl. 370-244.000.
Fujimaki, Nobuyoshi, to Shin-Etsu Handotai Co., Ltd. Method of evaluating a MIS-type semiconductor device. 5,701,088, Cl. 324-765.000.
Fujimatsu, Shinya: *See—*
Ishiyama, Masaaki; Matsuura, Takeaki; Mihoya, Takashi; Fujimatsu, Shinya; Utsugi, Masayoshi; and Ibuchi, Kouichi, 5,700,867, Cl. 524-539.000.
Fujimura, Tetsuya: *See—*
Moriya, Yukio; Koyanagi, Satoru; Fujimura, Tetsuya; Nagahama, Masayuki; Yamazaki, Kazuyuki; and Hishiyama, Toru, 5,699,873, Cl. 180-402.000.
Fujinami, Satoshi, to NEC Corporation. Radio communication system for performing multi-channel access. 5,701,590, Cl. 455-62.000.
Fujino, Masaru: *See—*
Fujii, Takashi; Shinmura, Satoru; Fujino, Masaru; Mizuno, Shinobu; Sekijima, Takenori; Chikagawa, Osamu; and Takagi, Hiroshi, 5,701,108, Cl. 333-202.000.
Fujino, Takeshi, to Nikon Corporation. Information recording system. 5,701,530, Cl. 396-311.000.
Fujishima, Naoto; and Kitamura, Akio, to Fuji Electric Co., Ltd. Lateral trench MISFET. 5,701,026, Cl. 257-510.000.
Fujita, Kazuo: *See—*
Kondo, Syunichi; and Fujita, Kazuo, 5,700,849, Cl. 522-16.000.
Fujita, Makoto; Yamamoto, Yukio; Sakate, Nobuo; and Hirabara, Shoji, to Mazda Motor Corporation. Manufacturing method of plastically formed product. 5,701,576, Cl. 419-29.000.
Fujita, Ryoichi: *See—*
Takiguchi, Tsuyoshi; Okado, Kenji; Taya, Masaaki; Fujita, Ryoichi; Kanbayashi, Makoto; Iida, Wakashi; and Ida, Tetsuya, 5,700,617, Cl. 430-110.000.
Fujita, Satoshi: *See—*
Kobayashi, Akira; Kurashima, Hideo; Sato, Harumi; Fujita, Satoshi; and Imazu, Katsuhiro, 5,700,529, Cl. 428-35.800.
Fujita, Toru: *See—*
Tanaka, Hiroshi; Fujita, Toru; and Ishiwatari, Tahei, 5,701,554, Cl. 399-69.000.
Fujitsu Limited: *See—*
Akaogi, Takao; and Yoshida, Masanobu, 5,701,274, Cl. 365-230.010.
Chikama, Terumi, 5,701,195, Cl. 359-341.000.
Fujii, Yasuhiro, 5,701,269, Cl. 365-210.000.
Fujii, Yasuo, 5,701,293, Cl. 370-244.000.
Higashiho, Mitsuhiro, 5,701,096, Cl. 327-536.000.
Liou, Jiunn-Yau; Wheeler, Richard L.; Sen, Bidyut; and Parker, James C., Jr., 5,701,071, Cl. 323-220.000.
Makiuchi, Masao, 5,701,374, Cl. 385-49.000.
Masuda, Syuzo; and Iwama, Ryouichi, 5,701,555, Cl. 399-69.000.
Nagashima, Tetsuro; Kawanishi, Toshiharu; Okutani, Shigeaki; Nomura, Osamu; and Iino, Takashi, 5,701,436, Cl. 395-489.000.
Shirasaki, Masataka, 5,701,376, Cl. 385-123.000.
Sugimoto, Katsumi, 5,701,556, Cl. 399-70.000.
Waki, Masaki, 5,701,028, Cl. 257-666.000.
Fujiwara, Shinji, to Hitachi, Ltd. Method of designated time interval reservation access process of online updating and backing up of large database versions without reserving exclusive control. 5,701,457, Cl. 395-608.000.
Fukazu, Yasuo: *See—*
Miyamoto, Kazuki; Ohki, Naoyuki; Nakano, Masaki; Ushiro, Takahiro; Fukazu, Yasuo; Chaki, Atsushi; Takata, Shinichi; and Ohyoshi, Kazuhiro, 5,701,402, Cl. 395-115.000.
Fukuda, Hiroshi: *See—*
Hasegawa, Norio; Terasawa, Tsuneo; Fukuda, Hiroshi; Hayano, Katsuya; Imai, Akira; Moniwa, Akemi; and Okazaki, Shinji, 5,700,601, Cl. 430-5.000.
Fukuda Metal Foil and Powder Co., Ltd.: *See—*
Yano, Masami; and Takami, Masato, 5,700,362, Cl. 205-191.000.
Fukuda, Yoshiyuki; Kojima, Katsura; and Sugiyama, Tadashi, to Kabushiki Kaisha TEC. Developing apparatus and image-forming apparatus using the same. 5,701,563, Cl. 399-284.000.
Fukuhara, Toru; Sosa, Toshio; Dobashi, Toshio; Sasagaki, Nobuaki; and Hara, Masaharu, to Nikon Corporation. Control device for preventing red-eye effect on camera. 5,701,519, Cl. 396-48.000.

Fukui, Kiyozumi, to Teijin Seiki Co., Ltd. System for producing guide rail. 5,699,604, Cl. 29-564.000.
Fukui, Masahiro, to Matsushita Electric Industrial Co., Ltd. Cell generation method and cell generation system. 5,701,255, Cl. 364-491.000.
Fukui, Tetsuro: *See—*
Miyazaki, Takeshi; Tanaka, Kazumi; Saito, Tsuyoshi; Ohnishi, Toshikazu; Fukui, Tetsuro; and Okamoto, Tadashi, 5,700,647, Cl. 435-6.000.
Fukui, Wataru: *See—*
Uchinami, Masanobu; Yamane, Koichi; and Fukui, Wataru, 5,699,769, Cl. 123-414.000.
Fukumura, Tikashi: *See—*
Iwata, Masuo; Seki, Mika; Inoue, Kouji; Takahashi, Ryoji; Fukumura, Tikashi; and Tanaka, Masaya, 5,700,575, Cl. 428-403.000.
Fukunaga, Yuichiro, to NSK, Ltd. Supporting apparatus for a steering column. 5,700,032, Cl. 280-775.000.
Fuller, William D.: *See—*
Kurtz, Robert J.; and Fuller, William D., 5,700,792, Cl. 514-171.000.
Funke, Peter, to Gebruder Funke KG. Egg cooker. 5,699,721, Cl. 99-336.000.
Furlani, Edward P.; Chatterjee, Dilip K.; and Ghosh, Syamal K., to Eastman Kodak Company. Method for the fabrication of threaded ceramic parts. 5,700,411, Cl. 264-125.000.
Furlani, Edward P.: *See—*
Stephany, Thomas M.; Mey, William; and Furlani, Edward P., 5,701,552, Cl. 399-53.000.
Furner, Paul E.: *See—*
Bonnema, James; Wang, Wen Der; Demarest, Scott W.; Furner, Paul E.; and Hildebrandt, Donald W., 5,700,430, Cl. 422-125.000.
Furugen, Munekatsu; Hamazaki, Shotaro; Kameoka, Norimasa; and Okamoto, Atsuhumi, to Sumitomo Metal Industries, Ltd. Method and apparatus for manufacturing hollow steel bars. 5,699,690, Cl. 72-69.000.
Furukawa, Ken: *See—*
Urawa, Yoshio; Furukawa, Ken; Shimizu, Toshikazu; Yamagishi, Yoji; Tsurugi, Tomio; and Ichino, Tomio, 5,700,988, Cl. 546-14.000.
Furukawa, Toshiyuki, to Lucky Corporation Co., Ltd. Hair clip. 5,699,815, Cl. 132-279.000.
Furuta, Hitoshi: *See—*
Maeda, Hirokazu; Furuta, Hitoshi; Takahashi, Taro; Takei, Chiemi; Kurita, Hiroko; and Sato, Yoko, 5,700,397, Cl. 252-312.000.
Fusion Bonding Corporation, The: *See—*
Fix, John William, Jr., 5,699,952, Cl. 228-102.000.
Fuso, Francesco; and Reinert, Gerhard, to Ciba Specialty Chemicals Corporation. UV absorbers, their preparation and the use thereof. 5,700,295, Cl. 8-189.000.
Fuss, Hans-Achim: *See—*
Saurenbach, Frank; and Fuss, Hans-Achim, 5,701,381, Cl. 385-139.000.
Fyson, John Richard; Rider, Christopher Barrie; Coldrick, Philip; and Menton, Janet Linda, to Eastman Kodak Company. Photographic processing. 5,701,545, Cl. 396-626.000.
G.D.S. Co., Ltd.: *See—*
Nagazumi, Yasuo, 5,701,260, Cl. 364-606.000.
Gadd, Craig T., to Epilogics, LP. One way drive device with a dog clutch to transmit torque and a ratchet clutch to provide an overrun function. 5,699,889, Cl. 192-35.000.
Gagné , Éric. Multi-drum barking machine. 5,699,843, Cl. 144-208.900.
Gailus, David W.: *See—*
Moynihan, Edward R.; Gailus, David W.; Palifka, Robert G.; Hoisington, Paul A.; Hine, Nathan P.; Adams-Brady, David; Biggs, Melvin L.; McDonald, Marlene M.; Barss, Steven H.; Mackay, Diane; Paulson, Bruce A.; and Mackay, Stephen C., 5,701,148, Cl. 347-92.000.
Gaiser, Gerd. Reactor for catalytically processing gaseous fluids. 5,700,434, Cl. 422-173.000.
Gallatin, David M.: *See—*
Tang, John G.; Gallatin, David M.; and Baik, David J., 5,701,232, Cl. 361-683.000.
Gallatin, W. Michael: *See—*
Kilgannon, Patrick D.; and Gallatin, W. Michael, 5,700,658, Cl. 435-69.100.
Gallione, Joseph P.: *See—*
Oury, Robert F.; Dingeldein, Mark S.; Ledger, Alan S.; and Gallione, Joseph P., 5,699,878, Cl. 187-234.000.
Galsterer, Wolfgang; Schlegel, Andreas; and Utz, Martin, to Zweckform Büro-Produkte GmbH. Sheet of labels, method of production and equipment. 5,700,535, Cl. 428-40.100.
Galvin-Donoghue, Mary Ellen: *See—*
Chandross, Edwin Arthur; Galvin-Donoghue, Mary Ellen; and Papadimitrakopoulos, Fotios, 5,700,696, Cl. 437-1.000.
Gammill, Ronald B.: *See—*
Hutchinson, Douglas K.; Barbachyn, Michael R.; Brickner, Steven J.; Gammill, Ronald B.; and Patel, Mahesh V., 5,700,799, Cl. 514-235.800.
Ganapol, David; and Small, Gary, to VLSI Technology, Inc. Universal QFP tray transfer method. 5,700,045, Cl. 294-64.100.
Gandhi, Jayanti L., to Intel Corporation. Apparatus and method for executing an atomic instruction. 5,701,501, Cl. 395-800.000.
Ganino, Anthony J.: *See—*
Canfield, Stephen L.; Reinholtz, Charles F.; Salerno, Robert J.; and Ganino, Anthony J., 5,699,695, Cl. 74-490.060.
Gantt, Timothy D.: *See—*
Ross, David O.; Southerland, Dale A.; and Gantt, Timothy D., 5,699,756, Cl. 122-17.000.
Ganz, Leonard R.; and Urgola, Anthony F. Composition and method for raised thermographic printing. 5,699,743, Cl. 101-488.000.
Gao, D. Y.: *See—*
Critser, John K.; and Gao, D. Y., 5,700,632, Cl. 435-2.000.
Gao, Yang, to Praxair S.T. Technology, Inc. Hearth roll with superior endurance capacity. 5,700,423, Cl. 266-103.000.
Gao, Yigong: *See—*
Neumeyer, John L.; Tamagnan, Gilles; and Gao, Yigong, 5,700,446, Cl. 424-1.850.
Gao, Yuan: *See—*
Zhong, Qiming; Sacken, Ulrich Von; Gao, Yuan; and Dahn, Jeffery Raymond, 5,700,597, Cl. 429-218.000.
Garant, John J.; and Indyk, Richard F., to International Business Machines Corporation. Structure to reduce stress in multilayer ceramic substrates. 5,700,549, Cl. 428-210.000.
Garcia, Jorge Luis: *See—*
Brannan, Michael H.; Garcia, Jorge Luis; Nichols, Jerry Ray; and Tokiyama, Masaru, 5,701,355, Cl. 381-169.000.
Garigapati, Venkata R.: *See—*
Mandeville, W. Harry, III; and Garigapati, Venkata R., 5,700,458, Cl. 424-78.070.
Garneau, John P., Sr. Attachable and removable handle for food serving utensils. 5,699,614, Cl. 30-142.000.
Gas Research Institute: *See—*
Azzazy, Medhat T., 5,701,172, Cl. 356-28.000.
Gastaldi, Roberto: *See—*
Calligaro, Cristiano; Daniele, Vincenzo; Gastaldi, Roberto; Manstretta, Alessandro; and Torelli, Guido, 5,701,265, Cl. 365-185.030.
Gaster, Laramie Mary, to SmithKline Beecham p.l.c. Dihydrobenzofuranylbiphenyl carboxamides having $5HT_{1D}$ antagonistic activity. 5,700,818, Cl. 514-364.000.
Gates, Stillman F., to Adaptec, Inc. Error generation circuit for testing a digital bus. 5,701,409, Cl. 395-183.170.
Gaus, Rainer; Zauner, Stefan; and Gesell, Günther, to Industrieanlagen-Betriebsgesellschaft mbH. High-temperature extensometer. 5,699,624, Cl. 33-787.000.
Gausepohl, Hermann: *See—*
Knoll, Konrad; and Gausepohl, Hermann, 5,700,876, Cl. 525-314.000.
Gauthier, Yves: *See—*
Berger, Régis; Gauthier, Yves; Couillard, Albert; and Belzile, Rolland, 5,699,915, Cl. 206-597.000.
Gay, Ben Douglas: *See—*
Csapo, John Steven; Aldrich, James Peter; and Gay, Ben Douglas, 5,701,297, Cl. 370-341.000.
Gazit, Aviv: *See—*
Hirth, Klaus Peter; Schwartz, Donna Pruess; Mann, Elaina; Shawver, Laura Kay; Keri, Gyorgi; Szekely, Istvan; Bajor, Tamas; Haimichael, Janis; Orfi, Laszlo; Levitzki, Alex; Gazit, Aviv; Ullrich, Axel; Lammers, Reiner; Kabbinavar, Fairooz F.; Slamon, Dennis; and Tang, Peng Cho, 5,700,822, Cl. 514-380.000.
Hirth, Klaus Peter; Schwartz, Donna Pruess; Mann, Elaina; Shawver, Laura Kay; Kéri, György; Székely, István; Bajor, Tamás; Haimichael, Janis; Orfi, László; Levitzki, Alex; Gazit, Aviv; Ullrich, Axel; and Lammers, Reiner, 5,700,823, Cl. 514-380.000.
Gearhardt, Kevin J.; and Pruehsner, Darrell L., to AT&T Global Information Solutions Company; Hyundai Electronics America; and Symbios Logic Inc. Automated test equipment digital tester expansion apparatus. 5,701,309, Cl. 371-25.100.
Geary, Brian P., to Progressive Technology in Lighting, Inc. Multi-component lamp adaptor assembly. 5,700,154, Cl. 439-236.000.
Gebhard, Albert W. Air-circulating base for bottled water cooling and dispensing apparatus. 5,699,669, Cl. 62-3.640.
Gebruder Funke KG: *See—*
Funke, Peter, 5,699,721, Cl. 99-336.000.
GEC Alsthom Stein Industrie: *See—*
Suraniti, Silvestre; and Morin, Jean-Xavier, 5,700,431, Cl. 422-139.000.
GEC Avery Limited: *See—*
Evans, Jonathan Paul, 5,701,261, Cl. 364-724.010.
Geiger, Robert L., to Motorola, Inc,. Method and apparatus for adaptively companding data packets in a data communication system. 5,701,302, Cl. 370-521.000.
Gelbart, Daniel, to Creo Products Inc. Method of loading metal printing plates on a vacuum drum. 5,699,740, Cl. 101-477.000.
Gelbien, Lawrence J.; Andreas, Philip B.; and Schweiger, Werner J., to Long Island Lighting Company. Apparatus and method for distributing electrical power. 5,701,226, Cl. 361-63.000.
Geller, Douglas: *See—*
Churchill, Robert Lee; and Geller, Douglas, 5,700,174, Cl. 441-65.000.
GelTex Pharmaceuticals Inc.: *See—*
Mandeville, W. Harry, III; and Garigapati, Venkata R., 5,700,458, Cl. 424-78.070.
Gemmer, Paul M.: *See—*
Hughes, Kenneth E.; Masterson, David C.; Fink, David J.; Metz, Barbara A.; Pickett, Gordon E.; Gemmer, Paul M.; and Brody, Richard S., 5,700,353, Cl. 162-143.000.
Virnelson, Kevin M.; Hughes, Kenneth E.; Masterson, David C.; Fink, David J.; Metz, Barbara A.; Pickett, Gordon E.; Gemmer, Paul M.; and Brody, Richard S., 5,700,354, Cl. 162-143.000.
Gemstar Development Corporation: *See—*
Russo, James; and Levine, Michael R., 5,701,383, Cl. 386-46.000.
Genencor International Inc.: *See—*

Bott, Richard Ray; Caldwell, Robert Mark; Cunningham, Brian C.; Estell, David Aaron; Power, Scott Douglas; and Wells, James Allen, 5,700,676, Cl. 435-221.000.
General Electric Company: *See—*
Beverage, Allan D., 5,699,966, Cl. 239-265.190.
Castonguay, Roger N.; and Lord, Jeffrey D., 5,701,111, Cl. 335-177.000.
Lampes, Elias Harry; Jacobson, Craig Robert; and Manning, Robert Francis, 5,700,132, Cl. 416-97.00R.
Manning, Michael Patrick; and Schilke, Peter William, 5,700,120, Cl. 411-389.000.
Steigerwald, Robert Louis; and Stevanovic, Ljubisa Dragoljub, 5,701,059, Cl. 315-219.000.
Xu, Bu-Xin; and Tsavalas, Yannis P., 5,701,075, Cl. 324-318.000.
General Hospital Corporation, The: *See—*
Cincotta, Anthony H.; Meier, Albert H.; and Wilson, John M., 5,700,795, Cl. 514-200.000.
General Motors Corporation: *See—*
Harris, Brent Alan; Drew, Shawn Daren; and Rybolt, Arnold Carl, 5,700,165, Cl. 439-621.000.
Logan, Jeffrey Allen; Hattery, John Clifford, Jr.; Sparkman, John Paul; and Pray, David Allan, 5,700,028, Cl. 280-728.200.
General Signal Corporation: *See—*
Right, Robert W.; Costa, Hilario S.; and Hewlin, John P., 5,701,115, Cl. 340-286.050.
Genetics Institute, Inc.: *See—*
Hattersley, Gary; and Rosen, Vicki A., 5,700,774, Cl. 514-2.000.
Wozney, John M.; and Celeste, Anthony J., 5,700,911, Cl. 530-350.000.
Yang, Yu-Chung; Bennett, Frances K.; and Paul, Stephan R., 5,700,664, Cl. 435-69.520.
Genzyme Corporation: *See—*
Beaudry, Gary A.; Bertelsen, Arthur H.; Sherman, Michael I.; and Vogelstein, Bert, 5,700,657, Cl. 435-69.100.
georg karl geka-brush GmbH: *See—*
Dumler, Norbert; and Fellner, Bernd, 5,699,578, Cl. 15-167.100.
Gerasimov, Jury Vasilievich; Grinberg, Jury Moiseevich; Djuzhev, Georgy Andreevich; Kallistov, Anatoly Anatolievich; Kurilenko, Vladimir Ilich; and Rakhovsky, Vadim Izrailovich, to Rossisko-shveitsarskoe aktsionernoe obschestvo zakrytogo tipa "NOVA". Method of obtaining electric discharge and device for effecting same. 5,701,057, Cl. 315-111.210.
Gerber, Matthias: *See—*
Schäfer, Peter; Klintz, Ralf; Hamprecht, Gerhard; Heistracher, Elisabeth; Westphalen, Karl-Otto; Gerber, Matthias; and Walter, Helmut, 5,700,805, Cl. 514-269.000.
Gerber, Nicholas; Apseloff, Glen; and Mullet, Daniel I., to Ohio State University, The. Treatment of pulmonary inflammation. 5,700,487, Cl. 424-650.000.
Gerenser, Louis J.: *See—*
Grace, Jeremy; Gerenser, Louis J.; Chen, Janglin; and Riecke, Edgar E., 5,700,577, Cl. 422-420.000.
Gericke, Rolf; Dorsch, Dieter; Baumgarth, Manfred; Minck, Klaus-Otto; and Beier, Norbert, to Merck Patent Gesellschaft mit Beschrankter Haftung. Alkyl-5-methylsulfonylbenzoylguanidine derivatives. 5,700,839, Cl. 514-618.000.
Gerresheim, Manfred, to SP Reifenwerke GmbH. Bead core for a pneumatic tire. 5,700,336, Cl. 152-540.000.
Gerszewski, Larry: *See—*
Van Doren, Matthew J.; Sauer, Don; Slocum, Alexander H.; Rocki, David Pap; Tam, Johann; and Gerszewski, Larry, 5,700,046, Cl. 294-119.100.
Gesell, Günther: *See—*
Gaus, Rainer; Zauner, Stefan; and Gesell, Günther, 5,699,624, Cl. 33-787.000.
Gessner, Keith W.: *See—*
Phillips, George E.; Jaszewski, Wayne M.; Griffiths, John M.; and Gessner, Keith W., 5,699,763, Cl. 123-184.210.
Gestind-M.B. "Manifattura di Brusolo" S.p.A.: *See—*
De Filippo, Emilio, 5,700,057, Cl. 297-408.000.
Geyer, Freddy, to Aerospatiale Societe Nationale Industrielle. System for extending or retracting two members and cam-locking the members in the extended position. 5,699,698, Cl. 74-526.000.
Geyer, Richard A.: *See—*
Gheer, Barry J.; Rasch, Kenneth R.; Tress, Tab A.; and Geyer, Richard A., 5,700,994, Cl. 219-497.000.
Ghaed, Ali; Leland, Jonathan K.; Zoski, Glenn D.; Goodman, Jack E.; and Grosser, John T., to IGEN International, Inc. Apparatus for carrying out electrochemiluminescence test measurements. 5,700,427, Cl. 422-52.000.
Gheer, Barry J.; Rasch, Kenneth R.; Tress, Tab A.; and Geyer, Richard A., to Xerox Corporation. Apparatus and fuser control method for reducing power star fuser recovery time. 5,700,994, Cl. 219-497.000.
Gherardi, Gian Luigi: *See—*
Spada, Walter; and Gherardi, Gian Luigi, 5,699,979, Cl. 242-559.300.
Ghosh, Syamal K.: *See—*
Furlani, Edward P.; Chatterjee, Dilip K.; and Ghosh, Syamal K., 5,700,411, Cl. 264-125.000.
Gia, Son M.: *See—*
Mirigian, Gregory E.; Van, Nga Thi; and Gia, Son M., 5,700,258, Cl. 606-1.000.
Giannetti, William Bernard, to Simmonds Precision Products Inc. Composite enclosure for electronic hardware. 5,700,342, Cl. 156-245.000.
Gibbs, Roy Thomas: *See—*
van den Akker, Richard Henry; Baverstock, Nigel; and Gibbs, Roy Thomas, 5,699,654, Cl. 53-478.000.
Gibson, Patrick William: *See—*
Cook, Roger Joseph; DeVoe, Joseph Paul; Macfarlane, Kevin Douglas; Parks, Daniel Robert; and Gibson, Patrick William, 5,701,063, Cl. 315-469.000.
Gieskes, Koenraad A.: *See—*
Kolcun, Joseph F.; Janisiewicz, Stanley W.; and Gieskes, Koenraad A., 5,699,934, Cl. 222-1.000.
Gilbert, Richard John: *See—*
Sinha, Satyadeo Narain; Varady, Arthur Joseph; and Gilbert, Richard John, 5,700,954, Cl. 73-116.000.
Gilbertsen, Todd Andrew; and Knight, Stephen Arthur, to International Business Machines Corporation. Tracing technique for application programs using protect mode addressing. 5,701,486, Cl. 395-704.000.
Gilchrest, Barbara A.; and Gordon, Philip R., to Trustees of Boston University, The. Methods for enhancing melanin synthesis in melanocytes using diacyglycerols and uses thereof. 5,700,450, Cl. 424-59.000.
Gill, Hardayal Singh; and Gurney, Bruce A., to International Business Machines Corporation. Spin valve sensor with antiparallel magnetization of pinned layers. 5,701,222, Cl. 360-113.000.
Gillberg-LaForce, Gunilla Elsa; Hetzler, Kevin George; and Jacobs, Rob Lee, to Kimberly-Clark Worldwide, Inc. Pull-activated container. 5,700,531, Cl. 428-36.100.
Gilliam, Peter H.; and Lumley, David William, to Ford Motor Company. Snap tab fastener and disassembly tool therefor. 5,699,601, Cl. 29-278.000.
Gilmore, Daniel R., III: *See—*
Behe, Thomas J.; Gilmore, Daniel R., III; and Thayer, Bruce E., 5,701,572, Cl. 399-354.000.
Giovanelli, Gian Luca: *See—*
Cavallo, Giorgio; Giovanelli, Gian Luca; and Martinis, Marco, 5,699,947, Cl. 225-101.000.
Gipson, Lamar Heath: *See—*
Cohen, Bernard; Jameson, Lee Kirby; Gipson, Lamar Heath; and Fauss, Judith Katherine, 5,700,553, Cl. 428-220.000.
Glachet, Charles: *See—*
Rohard, Michel; and Glachet, Charles, 5,700,843, Cl. 292-256.600.
Glasstech, Inc.: *See—*
Maltby, Robert E., Jr.; McMaster, Harold A.; Breno, Philip J.; Buckingham, James W.; and Vild, Michael J., 5,700,306, Cl. 65-182.200.
Glaverbel: *See—*
Zivkovic, Alexandre; Meynckens, Jean-Pierre; and Somerhausen, Bernard, 5,700,309, Cl. 75-252.000.
Glaxo Wellcome Inc.: *See—*
Newton, Susan Elizabeth; and Clarke, Berwyn Ewart, 5,700,680, Cl. 435-240.200.
Glew, Andrew F.; Mennemeier, Larry M.; Peleg, Alexander D.; Bistry, David; Mittal, Millind; Dulong, Carole; Kowashi, Eiichi; Eitan, Benny; Lin, Derrick; and Vakkalagadda, Ramamohan R., to Intel Corporation. Executing different instructions that cause different data type operations to be performed on single logical register file. 5,701,508, Cl. 395-800.000.
Glier, Michael T.; Cole, John; and Laird, Mark, to Nestor, Inc. Adaptive classifier having multiple subnetworks. 5,701,398, Cl. 395-27.000.
Glódi, István: *See—*
Alesz, József; Busznyák, Imre; Glódi, István; Kiss, András; Kukta, Józsefné; Nagy, Béla; Salamon, Péter; Szentpétery, Elemér; Tóth, Zoltán; and Ujhelyi, Tamás, 5,700,957, Cl. 73-861.357.
Glover, Neal; Zook, Christopher P.; Schadegg, John; and Witt, William L., to Cirrus Logic, Inc. Method for correcting unrecoverable sectors using track level redundancy in a disc drive storage system. 5,701,304, Cl. 371-10.200.
Gnesys, Inc.: *See—*
Greene, Boyd; and Nassif, Naji, 5,700,038, Cl. 285-54.000.
Goach, Kenneth Edmund, Jr.; Meyer, Gregory Phillip; and Sims, Jeffrey Scott, to International Business Machines Corporation. Method and apparatus for a structured ASCII browser for online publications formatted in a bookmaster format. 5,701,498, Cl. 395-762.000.
Gocho, Tetsuo: *See—*
Tsukamoto, Masanori; and Gocho, Tetsuo, 5,700,349, Cl. 156-657.100.
Godik, Eduard E., to Dynamics Imaging, Inc. Method of investigation of microcirculation functional dynamics of physiological liquids in skin and apparatus for its realization. 5,699,797, Cl. 128-653.100.
Goel, Piyush: *See—*
Bhargava, Gautam; Goel, Piyush; and Iyer, Balakrishna Ragmavendra, 5,701,454, Cl. 395-602.000.
Bhargava, Gautam; Goel, Piyush; and Iyer, Balakrishna Ragmavendra, 5,701,455, Cl. 395-602.000.
Goetz, George W., to TRW Vehicle Safety Systems Inc. Inflator with combustion chamber pressure regulator. 5,700,030, Cl. 280-736.000.
Gold, Laurence H., to Kidshop, Inc. Saw guide. 5,699,711, Cl. 83-743.000.
Goldberg, Ira B.; Mays, David L.; and Moormann, Laurel A., to Allen-Bradley Company, Inc. Apparatus for measuring consistency and flow rate of a slurry. 5,701,083, Cl. 324-642.000.
Goldstein, Barry M.: *See—*
Watanabe, Kyoichi A.; Pankiewicz, Krzystof W.; Goldstein, Barry M.; and Bell, J. Ellis, 5,700,786, Cl. 514-47.000.
Goler, Vernon Bernard: *See—*
Miller, Gary Lynn; Goler, Vernon Bernard; and Litch, Timothy Ernest, 5,701,421, Cl. 395-309.000.
Golman, Klaes; Andersson, Sven; Rise, Frode; Wistrand, Lars-Goran; and Wikstrom, Hakan, to Nycomed Imaging AS. Use of persistent free-radicals in magnetic resonance imaging. 5,700,448, Cl. 424-9.330.

Goltz, H. Robert: *See*—
Bowman, Reid Henry; and Goltz, H. Robert, 5,700,310, Cl. 95-45.000.
Golz, Robert E., to Murdock Webbing Company, Inc. Method and apparatus for manufacturing slotted webbing on a needle loom. 5,699,836, Cl. 139-22.000.
Gomez, Arturo C.: *See*—
Bennett, Paul F.; Adams, John P.; and Gomez, Arturo C., 5,700,118, Cl. 410-113.000.
Gonas, Albert J., to Cambridge Industries, Inc. Blow molded structural interior automotive parts. 5,700,050, Cl. 296-189.000.
Gonseth, Michael: *See*—
Powers, John; Shelton, Teriy; and Gonseth, Michael, 5,701,170, Cl. 355-40.050.
Gonze, Michel Henri André; Van Der Schueren, Freddy Maurits Luc; and Rapaille, André Léon Ivon, to Cerestar Holding B.V. Lozenges comprising binder and erythritol or maltitol as sweetener and process of making. 5,700,514, Cl. 426-660.000.
Goodchild, John; and Leonard, Thomas E., to Hybridon, Inc. Finderons and methods of their preparation and use. 5,700,923, Cl. 536-23.100.
Goodfellow, Val S.; Marathe, Manoj V.; Whalley, Eric T.; Fitzpatrick, Timothy D.; and Kuhlman, Karen G., to Cortech, Inc. Bradykinin antagonist peptides incorporating N-substituted glycines. 5,700,779, Cl. 514-14.000.
Goodman, Harris: *See*—
Quigley, John W., Jr.; and Goodman, Harris, 5,700,483, Cl. 424-486.000.
Goodman, Jack E.: *See*—
Ghaed, Ali; Leland, Jonathan K.; Zoski, Glenn D.; Goodman, Jack E.; and Grosser, John T., 5,700,427, Cl. 422-52.000.
Goodman, Robert M.: *See*—
Handelsman, Jo; Stabb, Eric V.; Jacobson, Lynn M.; Goodman, Robert M.; Johnson, David W.; and Smith, Kevin P., 5,700,462, Cl. 424-93.460.
Goodman, Steven L., to Wisconsin Alumni Research Foundation. Cross-sectional tissue textured surfaces. 5,700,241, Cl. 604-93.000.
Goodnow, Robert A., Jr.: *See*—
Kahne, Daniel E.; Goodnow, Robert A., Jr.; Taylor, Carol M.; and Yan, Lin, 5,700,916, Cl. 536-1.110.
Goodwin, Brent L.; and Masley, Francis J., to W. L. Gore & Associates, Inc. Protective covers with water and air impenetrable seams. 5,700,544, Cl. 428-76.000.
Gordon, Kathryn E.; and Wong, Richard J., to QuickLogic Corporation. Programmable interconnect structures and programmable integrated circuits. 5,701,027, Cl. 257-530.000.
Gordon, Norman S.; Cooper, Robert P.; and Quick, Richard L., to Laurus Medical Corporation. Endoscopic suture system. 5,700,272, Cl. 606-144.000.
Gordon, Philip R.: *See*—
Gilchrest, Barbara A.; and Gordon, Philip R., 5,700,450, Cl. 424-59.000.
Görtz, Theo: *See*—
Hund, Kerstin; Klein, Werner; Kördel, Werner; Görtz, Theo; and Schwarzer, Norbert, 5,700,109, Cl. 405-128.000.
Gosdowski, Gerhard; Arleth, Werner; and Ulmer, Peter, to Robert Bosch GmbH. Device for displacing workpiece carriers. 5,699,891, Cl. 198-370.100.
Gotch, Frances Margaret: *See*—
McMichael, Andre James; Nixon, Douglas Fraser; Townsend, Alain Robert Michael; and Gotch, Frances Margaret, 5,700,469, Cl. 424-208.100.
Goth, Gary Franklin; Kemink, Randall Gail; Loparco, John Joseph; and Schmidt, Roger Ray, to International Business Machines Corporation. Combined heat sink and sink plate. 5,699,853, Cl. 165-104.210.
Goto, Hisashi: *See*—
Kuboyama, Kimimasa; Yokoyama, Shoji; Miyakoshi, Yoshinori; Taniguchi, Hiroya; Tsuruta, Kazuhiro; and Goto, Hisashi, 5,699,655, Cl. 53-540.000.
Goto, Kazushige; and Miyazaki, Takahiro, to Sony Corporation. Magnetic recording medium. 5,700,563, Cl. 428-328.000.
Goto, Mitsuhiro: *See*—
Kukino, Satoru; Nakai, Tetsuo; Goto, Mitsuhiro; Yoshioka, Takashi; and Setoyama, Makoto, 5,700,551, Cl. 428-212.000.
Gottlieb, Amos J.: *See*—
Klainer, Stanley M.; Walt, David R.; and Gottlieb, Amos J., 5,700,897, Cl. 528-15.000.
Gould, Michael N.; and Ariazi, Eric A., to Wisconsin Alumni Research Foundation. Identification of differentially expressed genes. 5,700,644, Cl. 435-6.000.
Govaert, René: *See*—
Bosschaerts, Jacobus; Govaert, René; and Delabastita, Paul, 5,700,610, Cl. 430-30.000.
Gove, Robert: *See*—
Bonneau, Walt C., Jr.; Guttag, Karl; and Gove, Robert, 5,701,507, Cl. 395-800.000.
Goyette, William J.; and Keenan, Francis J., to Chemetals Technology Incorporated. Method of removing hydrogen sulfide from hot gas mixtures. 5,700,439, Cl. 423-230.000.
GP Companies, Inc.: *See*—
Simonette, Dallas W., 5,700,137, Cl. 417-360.000.
Grabbe, Dimitry: *See*—
Korsunsky, Iosif; Grabbe, Dimitry; and Schroepfer, Richard C., 5,700,151, Cl. 439-74.000.
Grabowski, Edward F.: *See*—
Wieloch, Francis J.; LaManna, Gina M.; Jackson, Frank J., Jr.; Smallman, Gary W.; Kemp, Kenneth A.; Speakman, Edward J.; Grabowski, Edward F.; Street, Terry L.; Wisniewski, Carl A.; and Czerniawski, John A., 5,699,584, Cl. 15-256.520.
Grace, Jeremy; Gerenser, Louis J.; Chen, Janglin; and Riecke, Edgar E., to Eastman Kodak Company. Molecular grafting to energetically treated polyesters to promote adhesion of gelatin-containing layers. 5,700,577, Cl. 422-420.000.
Graco Children's Products Inc.: *See*—
Bellows, William; Nelson, Paul; and Messner, Mark, 5,700,201, Cl. 472-103.000.
Graco Inc: *See*—
Bankert, Peter J.; Perry, Mark; and Grady, Richard, 5,699,817, Cl. 134-102.200.
Gradeler, Eric J., to Apple Computer, Inc. Interface for switching plurality of pin contacts to transmit data line and plurality of pin contacts to receive data line to interface with serial controller. 5,701,515, Cl. 395-834.000.
Grady, Richard: *See*—
Bankert, Peter J.; Perry, Mark; and Grady, Richard, 5,699,817, Cl. 134-102.200.
Graham, Christopher E.: *See*—
Capson, Brian; Cherry, Wes; Devaan, Jon; Duncan, Chris; Fowkes, Raymond E.; Graham, Christopher E.; James, Lisa R.; and McGuire, Timothy W., Jr., 5,701,499, Cl. 395-764.000.
Graham, Teresita Ordonez: *See*—
Angelopoulos, Marie; Brusic, Vlasta A.; Graham, Teresita Ordonez; Purushothaman, Sampath; Saraf, Ravi F.; Shaw, Jane Margaret; Roldan, Judith Marie; and Viehbeck, Alfred, 5,700,398, Cl. 252-500.000.
Grande, Daniel A.: *See*—
Breitbart, Arnold S.; and Grande, Daniel A., 5,700,289, Cl. 623-16.000.
Grandjean S.A.: *See*—
Erard, Francis Albert; and Ratajski, Michel Paul, 5,699,590, Cl. 24-71.00J.
Gray, James Delwin; Hughes, Michael Franklin; and Lutes, Paul Joseph, to Corken, Inc. Pump with improved bearing arrangement for axial position control. 5,700,140, Cl. 418-104.000.
Gray, Rand: *See*—
Mulchandani, Deepak; and Gray, Rand, 5,701,488, Cl. 395-704.000.
Gray, Stephen L., to W. R. Grace & Co.-Conn. Dual temperature hot water shrink system. 5,699,650, Cl. 53-442.000.
Gray, Vivian: *See*—
Sukiennik, Corrine A.; Mathis, Michael P.; and Gray, Vivian, 5,699,791, Cl. 128-206.130.
Green, Donald R., Jr., to Nippondenso Co., Ltd. Half duplex RF transceiver having low transmit path signal loss. 5,701,595, Cl. 455-83.000.
Green, Kelly A.: *See*—
Brand, John R.; and Green, Kelly A., 5,700,318, Cl. 106-442.000.
Greenberg, Peter. Backpack with integral garment. 5,699,560, Cl. 2-94.000.
Greene, Boyd; and Nassif, Naji, to Gnesys, Inc. Pipe connection assembly. 5,700,038, Cl. 285-54.000.
Greenwald, Roger J.: *See*—
Sauer, Jude S.; Greenwald, Roger J.; Oravecz, Michael G.; and Kobilansky, Alex, 5,700,236, Cl. 600-175.000.
Gregory, Susan A.: *See*—
Isakson, Peter C.; Anderson, Gary D.; and Gregory, Susan A., 5,700,816, Cl. 514-326.000.
Grelan Pharmaceutical Co., Ltd.: *See*—
Aotsuka, Tomoji; Abe, Naoki; and Ashizawa, Naoki, 5,700,819, Cl. 514-367.000.
Grice, Lonnie Edward: *See*—
Baker, Ernest Dysart; Dinwiddie, John Monroe, Jr.; Grice, Lonnie Edward; Joyce, James Maurice; Loffredo, John Mario; and Sanderson, Kenneth Russell, 5,701,502, Cl. 395-800.000.
Griffin, Daniel W.; and Hardwick, John C., to Digital Voice Systems, Inc. Synthesis of MBE-based coded speech using regenerated phase information. 5,701,390, Cl. 395-2.150.
Griffiths, John M.: *See*—
Phillips, George E.; Jaszewski, Wayne M.; Griffiths, John M.; and Gessner, Keith W., 5,699,763, Cl. 123-184.210.
Griffiths, Richard F.; and Jones, Christopher David, to United Kingdom of Great Britain and Northern Ireland of Defence and Evaluation Research Agency, The Secretary of State for Defence in Her Britannic Majesty's Government of the. Gas detection devices. 5,701,009, Cl. 250-356.100.
Grigsby, Robert Allison, Jr.; and Zimmerman, Robert LeRoy, to Huntsman Petrochemical Corporation. Polyurea foam made from a partially aminated polyether polyamine. 5,700,846, Cl. 521-128.000.
Grill, Berhard: *See*—
Herre, Jürgen; Grill, Berhard; Eberlein, Ernst; Brandenburg, Karlheinz; and Seitzer, Dieter, 5,701,346, Cl. 381-18.000.
Grill, Otto, to Formtech Enterprises, Inc. Sandable and stainable plastic/wood composite. 5,700,555, Cl. 428-233.000.
Grimard, Jean Pierre; and Olive, Eric, to Becton Dickinson France S.A. Backstop device for a flangeless syringe. 5,700,247, Cl. 604-220.000.
Grinberg, Jury Moiseevich: *See*—
Gerasimov, Jury Vasilievich; Grinberg, Jury Moiseevich; Djuzhev, Georgy Andreevich; Kallistov, Anatoly Anatolievich; Kurilenko, Vladimir Iliich; and Rakhovsky, Vadim Izrailovich, 5,701,057, Cl. 315-111.210.
Grinnell, Brian W.: *See*—

Calnek, David S.; and Grinnell, Brian W., 5,700,815, Cl. 514-324.000.
Grivna, Gordon: *See*—
Shin, Hank Hukyoo; Tracy, Clarence J.; Duffin, Robert L.; Freeman, John L., Jr.; Grivna, Gordon; and Wilson, Syd R., 5,700,721, Cl. 437-198.000.
Grohs, Erhard: *See*—
Kammerer, Eric; Biering, Lothar; Grohs, Erhard; Groht, Klaus; Reynvaan, Conrad; Siegmund, Horst; Spangenberg, Jorgen; and Uecker, Arwed, 5,701,046, Cl. 310-251.000.
Groht, Klaus: *See*—
Kammerer, Eric; Biering, Lothar; Grohs, Erhard; Groht, Klaus; Reynvaan, Conrad; Siegmund, Horst; Spangenberg, Jorgen; and Uecker, Arwed, 5,701,046, Cl. 310-251.000.
Grois, Igor; Makhlin, Ilya; Bunin, Grigoriy; and Pescetto, Michael J., to Molex Incorporated. Fiber optic attenuator. 5,701,382, Cl. 385-140.000.
Gröner, Albrecht: *See*—
Krone, Volker; Magerstädt, Michael; Walch, Axel; Gröner, Albrecht; and Hoffmann, Dieter, 5,700,459, Cl. 424-78.080.
Grosser, John T.: *See*—
Ghaed, Ali; Leland, Jonathan K.; Zoski, Glenn D.; Goodman, Jack E.; and Grosser, John T., 5,700,427, Cl. 422-52.000.
Grosskrueger, Duane D.: *See*—
Jacobs, Jack H.; Thomas, Matthew M.; Grosskrueger, Duane D.; Carpenter, Bernie F.; and Perry, Alan R., 5,700,337, Cl. 156-64.000.
Gruca, Ned J.; and Ward, Michael E., to Illinois Tool Works Inc. Method for sizing a lock nut. 5,700,199, Cl. 470-19.000.
Grundmann, Steven R., to Halliburton Energy Services, Inc. Fracture propping agents and methods. 5,699,860, Cl. 166-280.000.
Guangzhou Institute of Geochemistry Chinese Academy of Sciences: *See*—
Zhou, Zheng; and Zou, Zailan, 5,700,369, Cl. 209-166.000.
Guenther, Edward W.; and Leigh, Stephen, to Precision Power. Flat-panel speaker. 5,701,359, Cl. 381-203.000.
Guerlet, Jean-Paul; and Lambert, Claude, to Engelhard-Clal SAS. Wires incorporating a helical component, assemblies thereof, and use of said assemblies as catalyzer and/or to recover precious metals. 5,699,680, Cl. 66-202.000.
Guess, Ronald W.: *See*—
Hagemeyer Cook, Lori Ann; Guess, Ronald W.; and Williams, Stephen G., 5,701,235, Cl. 362-26.000.
Gühring, Manfred, to Heckler & Koch GmbH. Interlocking mechanism for a self-loading weapon. 5,700,967, Cl. 89-1.420.
Guidor AB: *See*—
Lundgren, Dan, 5,700,479, Cl. 424-435.000.
Guillen, Juan; and Leask, James M., to Sybase, Inc. Object oriented dispatch and supercall process and arrangement. 5,701,485, Cl. 395-683.000.
Gulbrandsen, Carl E.; and Moss, Richard L., to Bone Care International, Inc. Prevention and treatment of myocardial failure. 5,700,790, Cl. 514-167.000.
Gumaste, Anand V.: *See*—
Abrams, Andrew L.; and Gumaste, Anand V., 5,699,649, Cl. 53-428.000.
Guo, Ruijin, to Chemetics International Company Ltd. Processes of retaining chelant-containing effluent within pulp bleach plants. 5,700,350, Cl. 162-29.000.
Gupta, Rajendra P. Continuous soaking system. 5,699,726, Cl. 99-516.000.
Gupta, Rishab K.: *See*—
Morton, Donald L.; Gupta, Rishab K.; and Euhus, David M., 5,700,649, Cl. 435-7.100.
Gupta, Shanker Lal: *See*—
Sarin, Virender Kumar; Absolom, Darryl Robin; and Gupta, Shanker Lal, 5,700,777, Cl. 514-12.000.
Gurney, Bruce A.: *See*—
Gill, Hardayal Singh; and Gurney, Bruce A., 5,701,222, Cl. 360-113.000.
Gurney, Bruce Alvin: *See*—
Fontana, Robert Edward, Jr.; Gurney, Bruce Alvin; Lin, Tsann; Speriosu, Virgil Simon; Tsang, Ching Hwa; and Wilhoit, Dennis Richard, 5,701,223, Cl. 360-113.000.
Guth, Brian: *See*—
Pieper, Helmut; Austel, Volkhard; Himmelsbach, Frank; Linz, Günter; Guth, Brian; and Weisenberger, Johannes, 5,700,801, Cl. 514-252.000.
Guthrie, Dale; and Bennett, Tom. Golf putter with counterbalanced putter head. 5,700,207, Cl. 473-313.000.
Guthrie, James R. Mailbox mounting device which returns to its original position after side impact. 5,699,989, Cl. 248-219.200.
Gutniak, Mark K.; Coolidge, Thomas R.; Recker, Robert R.; and Wagner, Fred W. Method and treatment composition for decreasing patient time in catabolic state after traumatic injury. 5,700,775, Cl. 514-12.000.
Guttag, Karl: *See*—
Bonneau, Walt C., Jr.; Guttag, Karl; and Gove, Robert, 5,701,507, Cl. 395-800.000.
Gutzke, Karl N.: *See*—
Barnes, John Franklin; Gutzke, Karl N.; and Hooks, Robert M., 5,700,765, Cl. 508-378.000.
H. B. Fuller Licensing & Financing Inc.: *See*—
Edgington, Garry J.; and Ryan, Christopher M., 5,700,344, Cl. 156-334.000.
H.H. Brown Shoe Company, Inc.: *See*—
Boatwalla, Cyrus D., 5,699,628, Cl. 36-59.00C.
Ha, Nhut T.: *See*—
Do, Cuong D.; Ha, Nhut T.; and Butryn, Joseph A., 5,701,231, Cl. 361-683.000.
Ha, Young Jin: *See*—
Park, Young Jae; Park, San Il; Choi, Kyoung Bin; Ha, Young Jin; Park, Ki Ho; Ko, Chang Bog; and Kim, Jeong Gun, 5,699,852, Cl. 165-76.000.
Hansen, Nicolaas F.: *See*—
Wolters, Henricus F. W.; Lane, Samuel L.; Buijs, Wim; Hansen, Nicolaas F.; and Herkes, Frank E., 5,700,934, Cl. 540-538.000.
Habele, Michael, to Robert Bosch GmbH. Screwing device for measuring arrangement. 5,699,703, Cl. 81-57.380.
Haberey, Martin: *See*—
Steinmeyer, Andreas; Neef, Gunter; Kirsch, Gerald; Schwarz, Katica; Thieroff-Ekerdt, Ruth; Wiesinger, Herbert; and Haberey, Martin, 5,700,791, Cl. 514-167.000.
Habermehl, G. Lyle. Exit locating collated screw strips and screwdrivers therefore. 5,699,704, Cl. 81-434.000.
Habour Remediation and Transfer Inc. (HR&T): *See*—
Newton, Jeffrey P., 5,700,107, Cl. 405-128.000.
Hadtke, Frederick B.; El-Fakir, Linda; and Rosen, Greg M., to Pentech International Inc. Apparatus for sharpening crayon marking instruments to form an improved arcuate safety marking tip. 5,699,620, Cl. 30-452.000.
Hafner, Gregory G.: *See*—
Dam, Chuong Q.; Hafner, Gregory G.; and Burris, Kenneth W., 5,700,094, Cl. 384-569.000.
Haga, Takahiro: *See*—
Kaji, Masanori; Ono, Masayosi; Takabatake, Yosinobu; Kaido, Yosinori; Haga, Takahiro; and Hikosaka, Masaru, 5,701,067, Cl. 320-2.000.
Hagemeyer Cook, Lori Ann; Guess, Ronald W.; and Williams, Stephen G., to Whirlpool Corporation. Low cost flexible lighting method for appliances. 5,701,235, Cl. 362-26.000.
Hagen, Donald F.; Hart, Kenneth M.; and Johnson, Glenn D., to Minnesota Mining and Manufacturing Company. Particle loaded membranes as oxidant scavengers. 5,700,375, Cl. 210-651.000.
Haggerty, Judith F.: *See*—
VanSelous, Joseph S.; Haggerty, Judith F.; and Norris, Kevin E., 5,700,218, Cl. 475-12.000.
Haglund, Michael M.: *See*—
Hochman, Daryl; and Haglund, Michael M., 5,699,798, Cl. 128-653.100.
Hahn, Karl-Heinz; and Saisila, Chartchai, to Siemens Aktiengesellschaft. Electronic device housing. 5,700,976, Cl. 174-58.000.
Hahn, Michael G., to Intel Corporation. Method and apparatus for eliminating latch propagation delays in an alignment unit for use in a fractional bus architecture. 5,701,447, Cl. 395-559.000.
Hahn, Stephen F.: *See*—
Hucul, Dennis A.; and Hahn, Stephen F., 5,700,878, Cl. 525-333.300.
Hahnfeld, Jerry L.; Bee, Timothy G.; Kirkpatrick, Donald E.; Tung, Lu Ho; and Pike, William C., to Dow Chemical Company, The. Preparation of branched polymers from vinyl aromatic monomer. 5,700,887, Cl. 526-182.000.
Haimichael, Janis: *See*—
Hirth, Klaus Peter; Schwartz, Donna Pruess; Mann, Elaina; Shawver, Laura Kay; Keri, Gyorgi; Szekely, Istvan; Bajor, Tamas; Haimichael, Janis; Orfi, Laszlo; Levitzki, Alex; Gazit, Aviv; Ullrich, Axel; Lammers, Reiner; Kabbinavar, Fairooz F.; Slamon, Dennis; and Tang, Peng Cho, 5,700,822, Cl. 514-380.000.
Hirth, Klaus Peter; Schwartz, Donna Pruess; Mann, Elaina; Shawver, Laura Kay; Kéri, György; Székely, István; Bajor, Tamás; Haimichael, Janis; Orfi, László; Levitzki, Alex; Gazit, Aviv; Ullrich, Axel; and Lammers, Reiner, 5,700,823, Cl. 514-380.000.
Hakala, Kevin E.; Kunkel, Joseph D.; and Johnson, Glenn L., to White Consolidated Industries, Inc. Compressor mounted drain pan utilizing polyurethane adhesive. 5,699,677, Cl. 62-291.000.
Hale, Kirk K., Jr., to Michael Foods, Inc. Method for maintaining interior quality of irradiated shell eggs. 5,700,504, Cl. 426-240.000.
Halic, Vladimir, to Aristocrat Leisure Industries. Slot machines having security for bill validator and bill stacker. 5,700,195, Cl. 463-29.000.
Hall, Craig R.: *See*—
Fritzinger, Daniel D.; and Hall, Craig R., 5,699,869, Cl. 180-65.500.
Hall, James E., to Bridgestone Corporation. Synthesis of macrocyclic polymers having low hysteresis compounded properties. 5,700,888, Cl. 526-190.000.
Hall, Kenneth B.; McClelland, Robert J.; and Auxier, Thomas A., to United Technologies Corporation. Cooled blades for a gas turbine engine. 5,700,131, Cl. 416-97.00R.
Halliburton Energy Services, Inc.: *See*—
Grundmann, Steven R., 5,699,860, Cl. 166-280.000.
Halonie, Dean. Pin vise. 5,700,185, Cl. 451-365.000.
Halseth, Thor R.: *See*—
Daniels, George R.; Halseth, Thor R.; and Vehse, Daniel R., 5,701,347, Cl. 381-24.000.
Hamada, Kenji; Kirihata, Toshinori; Kamikubo, Keita; Takagi, Mikio; Nakamura, Masami; Narahara, Youzaburo; and Kawasaki, Koichi, to Yanmar Agricultural Equipment Co., Ltd. Agricultural combine. 5,699,656, Cl. 56-11.100.
Hamada, Yoshiaki: *See*—
Miyakawa, Futoshi; Kawamata, Masahiro; Hamada, Yoshiaki; Asao, Kosuke; and Kajikawa, Tsuneo, 5,699,872, Cl. 180-291.000.
Hamamatsu Photonics K.K.: *See*—
Nakaya, Takanori, 5,701,004, Cl. 250-207.000.
Yasukawa, Manabu; Horiguchi, Chiyoharu; and Koishi, Musubu, 5,700,084, Cl. 362-275.000.

Hamasaki, Masaru: *See*—
Ota, Masaki; Okadome, Youichi; Kobayashi, Hisakazu; and Hamasaki, Masaru, 5,699,716, Cl. 92-12.200.
Hamazaki, Nobuo: *See*—
Notsu, Ikurou; Matsuda, Hiroshi; Hamazaki, Nobuo; Takada, Yutaka; Miyata, Tatsuji; and Nakamura, Akira, 5,699,767, Cl. 123-323.000.
Hamazaki, Shotaro: *See*—
Furugen, Munekatsu; Hamazaki, Shotaro; Kameoka, Norimasa; and Okamoto, Atsuhumi, 5,699,690, Cl. 72-69.000.
Hammer, John F., to Cornelia Textiles, Inc. Method of storing logs and lumber cut therefrom. 5,699,646, Cl. 53-397.000.
Hamprecht, Gerhard: *See*—
Schäfer, Peter; Klintz, Ralf; Hamprecht, Gerhard; Heistracher, Elisabeth; Westphalen, Karl-Otto; Gerber, Matthias; and Walter, Helmut, 5,700,805, Cl. 514-269.000.
Hamuro, Junji: *See*—
Taniguchi, Tadatsugu; Muramatsu, Masami; Sugano, Haruo; Matsui, Hiroshi; Kashima, Nobukazu; and Hamuro, Junji, 5,700,913, Cl. 530-351.000.
Han, Chul-Hi; Kim, Choong-Ki; Lee, Jung-Yeal; and Oh, Kil-Hwan, to LG Electronics Inc. Method for fabricating a polycrystal silicon thin film transistor. 5,700,699, Cl. 437-21.000.
Hanada, Kazuyuki, to Dainichiseika Color & Chemicals Mfg. Co., Ltd.; and Ukima Colour & Chemicals Mfg. Co., Ltd. Back-side coating formulations for heat-sensitive recording materials and heat-sensitive recording materials having a back layer coated therewith. 5,700,868, Cl. 524-590.000.
Hanaoka, Koumei; Sakurai, Naoki; and Mori, Mutsuhiro, to Hitachi, Ltd. Semiconductor device having parallel connection of an insulated gate bipolar transistor and a diode. 5,701,018, Cl. 257-140.000.
Hanazawa, Yuji, to Tokyo Automatic Machinery Works, Ltd. Tear tape changer. 5,699,978, Cl. 242-552.000.
Hancock, Lawrence Francis; Kishbaugh, Alan Jay; and Parham, Marc Ellous, to Circe Biomedical, Inc. Block copolymers. 5,700,902, Cl. 528-373.000.
Hancock, Lawrence Francis; Kishbaugh, Alan Jay; and Parham, Marc Ellous, to Circe Biomedical, Inc. Block copolymers. 5,700,903, Cl. 528-373.000.
Handelsman, Jo; Stabb, Eric V.; Jacobson, Lynn M.; Goodman, Robert M.; Johnson, David W.; and Smith, Kevin P., to Wisconsin Alumni Research Foundation. *Bacillus cereus* strain MS1-9, ATCC 55812. 5,700,462, Cl. 424-93.460.
Hansen, Bondo John: *See*—
Biere, Helmut; Huth, Andreas; Rahtz, Dieter; Schmiechen, Ralph; Seidelmann, Dieter; Kehr, Wolfgang; Schneider, Herbert Hans; Engelstoft, Mogens; Hansen, Bondo John; Waetjen, Frank; and Honoré, Tage, 5,700,808, Cl. 514-292.000.
Hansen, David J.: *See*—
Jost, Mark E.; Hansen, David J.; and McDonald, Steven M., 5,700,732, Cl. 438-401.000.
Hanson, Lee Frederick: *See*—
Malladi, Deviprasad; Hanson, Lee Frederick; and Kahahane, Jean, 5,701,085, Cl. 324-754.000.
Hanson, Ronald L.; Patel, Ramesh N.; and Szarka, Laszlo J., to Bristol-Myers Squibb Company. Enzymatic hydrolysis method for the conversion of C-7 sugar to C-7 hydroxyl taxanes. 5,700,669, Cl. 435-123.000.
Hanyuh, Yoshiaki, to Ricoh Company, Ltd. Binary to multi-value conversion apparatus for improved image reduction and enlargement. 5,701,363, Cl. 382-174.000.
Haq, Ziya; Khan-Lodhi, Abid Nadim; and Sams, Philip John, to Lever Brothers Company, Division of Conopco, Inc. Fabric softening composition. 5,700,387, Cl. 252-8.630.
Hara, Hiroshi. Sheet for holding information recording carriers. 5,699,905, Cl. 206-308.100.
Hara, Kazuyoshi: *See*—
Kanazawa, Masaharu; Natsuhara, Toshiya; Hara, Kazuyoshi; and Tanaka, Yasuo, 5,701,569, Cl. 399-308.000.
Hara, Masaharu: *See*—
Fukuhara, Toru; Sona, Toshio; Dobashi, Toshio; Sasagaki, Nobuaki; and Hara, Masaharu, 5,701,519, Cl. 396-48.000.
Hara, Tomoyuki; Tobita, Kenichi; Niimi, Tsutomu; Amemiya, Izumi; and Takasaki, Toshiharu, to Nissan Motor Co., Ltd. Driving force transfer apparatus for four-wheel drive vehicle. 5,699,871, Cl. 180-247.000.
Hara, Yasuaki: *See*—
Aoki, Shunji; Ohba, Toshio; Hara, Yasuaki; and Itoh, Kunio, 5,700,899, Cl. 528-17.000.
Hara, Yoshikazu, to Riso Kagaku Corporation. Ink-supply control device and stencil printing machine having the same. 5,699,731, Cl. 101-119.000.
Harada, Ichiro: *See*—
Harada, Junji; Harada, Ichiro; and Nakamura, Koji, 5,700,127, Cl. 414-416.000.
Harada, Junji; Harada, Ichiro; and Nakamura, Koji, to Tokyo Electron Limited. Substrate processing method and substrate processing apparatus. 5,700,127, Cl. 414-416.000.
Harada, Takahiro: *See*—
Uyama, Haruo; Harada, Takahiro; Kano, Mitsuru; Matsudaira, Nagahisa; Hoshino, Kazuhisa; Kitamura, Satoshi; Noguchi, Fuminobu; and Shikakubo, Tsutomu, 5,700,550, Cl. 428-212.000.
Harbin, Steven Anthony; and Rainer, Brian Keith, to Southwestern Bell Technology Resources, Inc. Land-based wireless communications system having a scanned directional antenna. 5,701,583, Cl. 455-25.000.
Harding, Claude J., to MHD Corporation. Detachable closure system for an open-ended tubular member. 5,699,922, Cl. 215-308.000.
Hardwick, John C.: *See*—
Griffin, Daniel W.; and Hardwick, John C., 5,701,390, Cl. 395-2.150.
Hardy, Frederick Edward; and Murch, Bruce Prentiss, to Procter & Gamble Company, The. Polyhydroxy fatty acid amide surfactants in percarbonate bleach-containing compositions. 5,700,771, Cl. 510-315.000.
Hargis, David E.: *See*—
Minich, Arthur P.; Kappel, David W.; Hargis, David E.; and Assa, Shlomo, 5,700,076, Cl. 353-31.000.
Harpel, William L.: *See*—
Ouyang, Jiangbo; and Harpel, William L., 5,700,525, Cl. 427-416.000.
Harper, James M., to Sun Microsystems, Inc. Converting handle-based find first/find next/find closed to non-handle based find first/find next. 5,701,474, Cl. 395-621.000.
Harrington, Steven J.; and Klassen, R. Victor, to Xerox Corporation. Subpixel character positioning with antialiasing with grey masking techniques. 5,701,365, Cl. 382-212.000.
Harrington, Steven J.; and Taber, Jean A., to Xerox Corporation. Printing black and white reproducible color documents. 5,701,401, Cl. 395-109.000.
Harris, Brent Alan; Drew, Shawn Daren; and Rybolt, Arnold Carl, to General Motors Corporation. Fused high ampacity electrical quick disconnect. 5,700,165, Cl. 439-621.000.
Harris Corporation: *See*—
Fisher, Gregory J.; and Chi, Chong I., 5,701,097, Cl. 327-538.000.
Harris, Daryl Robert; Jambhekar, Shrirang Nilkanth; Reber, William Louis; Stuckman, Bruce Edward; and Perttunen, Cary Drake, to Motorola, Inc. Wireless pager with prestored images and methods and systems for use therewith. 5,701,258, Cl. 364-514.00R.
Harris, Pamela Jo. Method for treating Kaposi's sarcoma and HIV infections. 5,700,781, Cl. 514-21.000.
Harrison, R. Loyd; and Davies, Steven P., to Hughes Aircraft Company. Modular array processor architecture having a plurality of interconnected load-balanced parallel processing nodes. 5,701,482, Cl. 395-675.000.
Harryman, Douglas T., II, to University of Washington, The. System for repair of capsulo-labral separations. 5,700,266, Cl. 606-80.000.
Hart, Kenneth M.: *See*—
Hagen, Donald F.; Hart, Kenneth M.; and Johnson, Glenn D., 5,700,375, Cl. 210-651.000.
Harte, Lawrence J.: *See*—
Croft, Thomas Milton; Dent, Paul Wilkinson; Harte, Lawrence J.; and Solve, Torbjorn, 5,701,329, Cl. 375-224.000.
Hartman, Donn A.; and Cloud, Charles E., to Cloud Corporation. Pouch machine for making maximum volume pouch. 5,699,653, Cl. 53-455.000.
Harwigsson, Ian: *See*—
Hellsten, Martin; and Harwigsson, Ian, 5,700,766, Cl. 508-500.000.
Hasegawa, Akira; Kiso, Makato; and Yoshikuni, Yoshiaki, to Nippon Shinyaku Co., Ltd. Moranoline derivative. 5,700,918, Cl. 536-18.700.
Hasegawa, Fumihiko; Kobayashi, Makoto; and Hirano, Tameyoshi, to Shin-Etsu Handotai Co., Ltd. Method of manufacturing semiconductor wafers and process of and apparatus for grinding used for the same method of manufacture. 5,700,179, Cl. 451-41.000.
Hasegawa, Norio; Terasawa, Tsuneo; Fukuda, Hiroshi; Hayano, Katsuya; Imai, Akira; Moniwa, Akemi; and Okazaki, Shinji, to Hitachi, Ltd. Photomask, manufacture of photomask, formation of pattern, manufacture of semiconductor device, and mask pattern design system. 5,700,601, Cl. 430-5.000.
Hasegawa, Shinichi: *See*—
Shimada, Yuzo; Suyama, Takayuki; Tanaka, Yoshimasa; and Hasegawa, Shinichi, 5,699,610, Cl. 29-840.000.
Hasegawa, Yasushi: *See*—
Honda, Tsutomu; Itoh, Hisanori; Ueno, Takuya; Mori, Junji; Matsumoto, Hiroyuki; Hasegawa, Yasushi; and Kajita, Hideo, 5,701,518, Cl. 396-29.000.
Hashiba, Soichiro: *See*—
Ikeda, Shuji; Meguro, Satoshi; Hashiba, Soichiro; Kuramoto, Isamu; Koike, Atsuyoshi; Sasaki, Katsuro; Ishibashi, Koichiro; Yamanaka, Toshiaki; Hashimoto, Naotaka; Moriwaki, Nobuyuki; Takahashi, Shigeru; Hiraishi, Atsushi; Kobayashi, Yutaka; and Yukutake, Seigou, 5,700,704, Cl. 437-52.000.
Hashimoto, Hidetsuna, to Kabushiki Kaisha Toshiba. Method of manufacturing semiconductor device having multilayer interconnection. 5,700,720, Cl. 437-195.000.
Hashimoto, Koichi; and Kamiji, Michiyuki, to Nakanishi Metal Works Co., Ltd. Vulcanized sheet comprising annular rubber articles, a method of and an apparatus for separating the articles from the vulcanized sheet. 5,699,946, Cl. 225-1.000.
Hashimoto, Naotaka: *See*—
Ikeda, Shuji; Meguro, Satoshi; Hashiba, Soichiro; Kuramoto, Isamu; Koike, Atsuyoshi; Sasaki, Katsuro; Ishibashi, Koichiro; Yamanaka, Toshiaki; Hashimoto, Naotaka; Moriwaki, Nobuyuki; Takahashi, Shigeru; Hiraishi, Atsushi; Kobayashi, Yutaka; and Yukutake, Seigou, 5,700,704, Cl. 437-52.000.
Meguro, Satoshi; Uchibori, Kiyofumi; Suzuki, Norio; Motoyoshi, Makoto; Koike, Atsuyoshi; Yamanaka, Toshiaki; Sakai, Yoshio; Kaga, Toru; Hashimoto, Naotaka; Hashimoto, Takashi; Honjou, Shigeru; and Minato, Osamu, 5,700,705, Cl. 437-52.000.
Hashimoto, Takashi: *See*—
Meguro, Satoshi; Uchibori, Kiyofumi; Suzuki, Norio; Motoyoshi, Makoto; Koike, Atsuyoshi; Yamanaka, Toshiaki; Sakai, Yoshio; Kaga, Toru; Hashimoto, Naotaka; Hashimoto, Takashi; Honjou, Shigeru; and Minato, Osamu, 5,700,705, Cl. 437-52.000.

Hashimoto, Toshihiro; Nakamura, Kenichi; and Takagawa, Makoto, to Mitsubishi Gas Chemical Company. Process for the production of pyridinecarboxylic acids. 5,700,944, Cl. 546-327.000.
Hashimoto, Yuichi: *See*—
Amamiya, Syoji; Maruyama, Akio; and Hashimoto, Yuichi, 5,701,571, Cl. 399-343.000.
Hashish, Mohamed Ahmed; Crowe, David Arthur; and Armstrong, Neil Dean, to Eastman Kodak Company. Abrasive-liquid polishing and compensating nozzle. 5,700,181, Cl. 451-40.000.
Hasunuma, Junichi: *See*—
Nakagawa, Tsuguhiko; Yamaguchi, Ryosuke; Osanai, Hisashi; Hasunuma, Junichi; and Yamamoto, Takemi, 5,700,420, Cl. 266-44.000.
Hasushita, Sachio; Yoneyama, Shuji; Maruyama, Koichi; and Ito, Takayuki, to Asahi Kogaku Kogyo Kabushiki Kaisha. Shiftable lens system. 5,701,205, Cl. 359-691.000.
Hatagishi, Yuji; Yamamoto, Toshihiko; Abe, Kimihiro; and Okabe, Toshiaki, to Yazaki Corporation. Connector. 5,700,162, Cl. 439-595.000.
Hatfield, Lowell D.: *See*—
Fisher, Jack W.; Hatfield, Lowell D.; Hoying, Richard C.; and Ray, James E., 5,700,933, Cl. 540-364.000.
Hattersley, Gary; and Rosen, Vicki A., to Genetics Institute, Inc. Compositions comprising bone morphogenic proteins and truncated parathyroid hormone related peptide, and methods of inducing cartilage by administration of same. 5,700,774, Cl. 514-2.000.
Hattery, John Clifford, Jr.: *See*—
Logan, Jeffrey Allen; Hattery, John Clifford, Jr.; Sparkman, John Paul; and Pray, David Allan, 5,700,028, Cl. 280-728.200.
Hatwar, Tukaram K.: *See*—
Farruggia, Giuseppe; Hatwar, Tukaram K.; and Cunningham, Michael P., 5,700,540, Cl. 428-641.000.
Hauck, Bobbie W., to Wenger Manufacturing Inc. Pressure-controlled die apparatus for the production of extrusion-cooked aquatic feeds. 5,700,510, Cl. 426-516.000.
Hauck Manufacturing Company: *See*—
Irwin, Bruce C.; Moore, Edward E.; and Baum, Raymond F., 5,700,143, Cl. 431-284.000.
Hauck, Preston A.: *See*—
Lewis, Ian D.; and Hauck, Preston A., 5,701,417, Cl. 395-200.160.
Haug, Kurt: *See*—
Woerner, Bernhard; Haug, Kurt; Fabry, Thomas; Kusserow, Peter; and Jenner, Bert, 5,700,079, Cl. 362-80.000.
Hauser, Erwin, to KNF Neuberger GmbH. Pump stand. 5,699,992, Cl. 248-437.000.
Hawkins, Michael G.: *See*—
Higuchi, Fumii; Ianni, John J.; Smith, Fraser S.; Hawkins, Michael G.; and Leonardo, Joseph L., 5,700,413, Cl. 264-145.000.
Hawkins, Phillip R.; Wilde, Craig G.; and Seilhamer, Jeffrey J., to Incyte Pharmaceuticals, Inc. Hyaluronan receptor expressed in human umbilical vein endothelial cells. 5,700,912, Cl. 530-350.000.
Hawks, Bill J., Jr.: *See*—
Boettger, Conrad H.; and Hawks, Bill J., Jr., 5,699,988, Cl. 248-122.100.
Hay, David A.: *See*—
Carr, Albert A.; Kane, John M.; and Hay, David A., 5,700,812, Cl. 514-317.000.
Carr, Albert A.; Kane, John M.; and Hay, David A., 5,700,813, Cl. 514-317.000.
Hayafuji, Norio; and Kawazu, Zempei, to Mitsubishi Denki Kabushiki Kaisha. Semiconductor laser producing short wavelength light. 5,701,321, Cl. 372-44.000.
Hayano, Katsuya: *See*—
Hasegawa, Norio; Terasawa, Tsuneo; Fukuda, Hiroshi; Hayano, Katsuya; Imai, Akira; Moniwa, Akemi; and Okazaki, Shinji, 5,700,601, Cl. 430-5.000.
Hayashi, Bunya; and Shimauchi, Keisuke, to SMC Corporation. Solenoid valve controller. 5,699,830, Cl. 137-554.000.
Hayashi, Bunya; and Ishikawa, Makoto, to SMC Corporation. Manifold-type solenoid valves. 5,699,834, Cl. 137-884.000.
Hayashi, Hitoshi: *See*—
Kikuchi, Katsuhide; Hayashi, Hitoshi; Takeuchi, Akira; and Takigawa, Kenji, 5,700,392, Cl. 252-299.010.
Hayashi, Masaho: *See*—
Ishikawa, Hiroki; Kenmochi, Yasuhiko; Bando, Takeshi; Hayashi, Masaho; and Shinogi, Norikazu, 5,699,912, Cl. 206-494.000.
Hayashi, Narutoshi: *See*—
Ogino, Kazuya; Yokoyama, Kaneo; Hayashi, Narutoshi; Omura, Takashi; and Yamamoto, Setsuko, 5,700,296, Cl. 8-489.000.
Hayashi, Shinzo, to NGK Insulators, Ltd. Forming process utilizing liquid absorption by liquid-absorbing substance, and formed material produced by said process. 5,701,577, Cl. 428-546.000.
Hayden, Richard A.: *See*—
Doughty, David T.; Hayden, Richard A.; Cobes, John W., III; and Matviya, Thomas M., 5,700,436, Cl. 423-210.000.
Hayman, Ken: *See*—
Anderson, Mark Stephen; Yesberg, John Desborough; Pope, Michael; Nayda, Lisa; Hayman, Ken; and Beahan, Brendan, 5,701,342, Cl. 380-4.000.
Hayner, David Alan: *See*—
Stuckman, Bruce Edward; and Hayner, David Alan, 5,701,395, Cl. 395-20.000.
Haynes, Carla A.: *See*—
Rosenthal, Arthur L.; Light, Nicholas D.; and Haynes, Carla A., 5,700,476, Cl. 424-426.000.
Hazato, Atsuo: *See*—
Watanabe, Yasuyoshi; Suzuki, Masaaki; Hazato, Atsuo; and Langström, Bengt, 5,700,833, Cl. 514-510.000.
HE Holdings, Inc.: *See*—
Ray, Michael; and Kennedy, Adam M., 5,701,008, Cl. 250-352.000.
Healthometer, Inc.: *See*—
Lucas, Eric E.; Vitantonio, Marc L.; and Miroewski, Michael, 5,699,719, Cl. 99-299.000.
Hecht, Stephen Charles: *See*—
Dalal, Ketan K.; and Hecht, Stephen Charles, 5,701,461, Cl. 395-604.000.
Heckel, Horst; Skaletz, Detlef; Wagner, Bruno; and Heydweiller, Joachim, to Hoechst Aktiengesellschaft. Granules of fiber-reinforced thermoplastic. 5,700,556, Cl. 428-297.400.
Heckler & Koch GmbH: *See*—
Gühring, Manfred, 5,700,967, Cl. 89-1.420.
Hedrick, James Lupton: *See*—
Hedrick, Jeffrey Curtis; Hedrick, James Lupton; Liao, Yun-Hsin; Miller, Robert Dennis; and Shih, Da-Yuan, 5,700,844, Cl. 521-77.000.
Hedrick, Jeffrey Curtis; Hedrick, James Lupton; Liao, Yun-Hsin; Miller, Robert Dennis; and Shih, Da-Yuan, to International Business Machines Corporation. Process for making a foamed polymer. 5,700,844, Cl. 521-77.000.
Heeks, George J.: *See*—
Badesha, Santokh S.; Heeks, George J.; Henry, Arnold W.; and Chow, Che Chung, 5,700,568, Cl. 428-334.000.
Heh, Deborah A. Detachable organizing apparatus for children furniture. 5,699,564, Cl. 5-503.100.
Hehl, Karl. Injection molding machine for processing synthetic materials. 5,700,502, Cl. 425-589.000.
Hehl, Thomas; and Prohaska, Hans, to ITT Automotive Europe GmbH. System of fixating a shaft. 5,700,104, Cl. 403-265.000.
Hehr International Inc.: *See*—
Smith, Stuart B., 5,700,856, Cl. 524-176.000.
Heide, Patric, to Siemens Aktiengesellschaft. Radio-frequency oscillator of planar design. 5,701,104, Cl. 331-96.000.
Heidelberger Druckmaschinen Aktiengesellschaft: *See*—
Bitterich, Wolfgang, 5,699,734, Cl. 101-216.000.
Heilig, Alexander; and Bigi, Dante, to TRW Occupant Restraint Systems GmbH. Subassembly comprising a steering wheel, a steering shaft and a gas generator. 5,700,031, Cl. 280-731.000.
Heiman, Arie: *See*—
Alon, Amir; Heiman, Arie; and Katz, Itzhak, 5,701,283, Cl. 369-44.410.
Heindel, Kevin O.: *See*—
Saindon, Stephen A.; Heindel, Kevin O.; and Morrow, James G., 5,701,180, Cl. 356-429.000.
Heinisch, Ulrich: *See*—
Scheifele, Horst; Krieger, Eberhard; Heinisch, Ulrich; and Wentsch, Siegfried, 5,699,709, Cl. 83-236.000.
Heinrich, Hans-Jürgen: *See*—
Koltze, Karl; Heinrich, Hans-Jürgen; Roland, Volker; and Voidel, Peter, 5,699,658, Cl. 57-76.000.
Heintz, Roswitha A.: *See*—
Soon-Shiong, Patrick; Desai, Neil P.; Sandford, Paul A.; Heintz, Roswitha A.; and Sojomihardjo, Soebianto, 5,700,848, Cl. 522-7.000.
Heise, Wolfgang: *See*—
Schmidt, Peter; Heise, Wolfgang; and Lappe, Bernhard, 5,699,741, Cl. 101-481.000.
Heistracher, Elisabeth: *See*—
Schäfer, Peter; Klintz, Ralf; Hamprecht, Gerhard; Heistracher, Elisabeth; Westphalen, Karl-Otto; Gerber, Matthias; and Walter, Helmut, 5,700,805, Cl. 514-269.000.
Helena Laboratories Corporation: *See*—
Sanford, James Robert Markus, 5,700,205, Cl. 473-232.000.
Helinski, Donald R.: *See*—
McElroy, Marlene D., deceased; Helinski, Donald R.; Wood, Keith V.; De Wet, Jeffrey R.; Ow, David W.; and Howell, Stephen H., 5,700,673, Cl. 435-189.000.
Hellberg, Mark: *See*—
Dean, Thomas R.; Hellberg, Mark; and Sallee, Verney L., 5,700,835, Cl. 514-530.000.
Hellmann, Udo: *See*—
Stricker, Wolfgang; Hellmann, Udo; and Stephan, Werner, 5,700,330, Cl. 134-22.190.
Hellsten, Martin; and Harwigsson, Ian, to Berol Nobel AB. Use of an amphoteric surfactant as a friction-reducing agent. 5,700,766, Cl. 508-500.000.
Helmer, Kerry: *See*—
Perry, William; and Helmer, Kerry, 5,701,211, Cl. 359-873.000.
Helmo, Kim, to BioBalance A/S. Biological treatment plant controlled by fluorescence sensors. 5,700,370, Cl. 210-94.000.
Helmsderfer, John A. Cover assembly with integral measurement indicia for covering undersink piping. 5,699,828, Cl. 137-375.000.
Hendricks, Mark R. Dry powder inhaler. 5,699,789, Cl. 128-203.150.
Henegar, Jeffrey W.: *See*—
Davis, James A.; Henegar, Jeffrey W.; and Barham, William F., Jr., 5,700,538, Cl. 428-57.000.
Heneghan, Karen: *See*—
Heneghan, Ken; and Heneghan, Karen, 5,699,581, Cl. 15-250.070.

Heneghan, Ken; and Heneghan, Karen. Heated wiper assembly with brush attachment. 5,699,581, Cl. 15-250.070.
Henkel Corporation: *See—*
Ishii, Hitoshi; and Ogino, Takao, 5,700,334, Cl. 148-273.000.
Henkel Kommanditgesellschaft auf Aktien: *See—*
Haver, Thomas; Friese, Carsten; Emmerling, Winfried; Kux, Michael; and Motzkat, Kerstin, 5,700,891, Cl. 526-301.000.
Henley, Matthew: *See—*
Chiu, Chung-Wai; Jeffcoat, Roger; Henley, Matthew; and Peek, Leroy, 5,700,917, Cl. 536-18.700.
Hennemann, Lothar Roland: *See—*
Rürup, Claus; and Hennemann, Lothar Roland, 5,700,986, Cl. 200-501.320.
Henry, Arnold W.: *See—*
Badesha, Santokh S.; Heeks, George J.; Henry, Arnold W.; and Chow, Che Chung, 5,700,568, Cl. 428-334.000.
Heraeus Elektrochemie GmbH: *See—*
Klatt, Bruno; Horz, Manfred; Koelling, Hartmut; Berndt, Karlheinz; Krueger, Gerhard; Kuenne, Hans-Joachim; Moerl, Lothar; and Backhaus, Lothar, 5,700,572, Cl. 428-357.000.
Heraeus Noblelight GmbH: *See—*
Wolf, Christoph; and Dees, Manfred, 5,701,090, Cl. 313-25.000.
Herberts Gesellschaft mit beschrankter Haftung: *See—*
Stricker, Wolfgang; Hellmann, Udo; and Stephan, Werner, 5,700,330, Cl. 134-22.190.
Hercend, Thierry; Triebel, Frederic; Roman-Roman, Sergio; and Ferradini, Laurent, to Roussel Uclaf. Nucleotide sequences coding for variable regions of beta chains of human T lymphocyte receptors, corresponding peptide segments and the diagnostic and therapeutic uses. 5,700,907, Cl. 530-324.000.
Herkes, Frank E.: *See—*
Wolters, Henricus F. W.; Lane, Samuel L.; Buijs, Wim; Hansen, Nicolaas F.; and Herkes, Frank E., 5,700,934, Cl. 540-538.000.
Herman Miller, Inc.: *See—*
Newhouse, Thomas J., 5,700,051, Cl. 297-188.110.
Hermes Schleifmittel GmbH: *See—*
Uhlmann, Eckart; and Struth, Gerhard, 5,700,188, Cl. 451-532.000.
Herre, Jürgen; Grill, Berhard; Eberlein, Ernst; Brandenburg, Karlheinz; and Seitzer, Dieter, to Fraunhofer-Gesellschaft zur Forderung der Angewandten Forschung e.V. Method of coding a plurality of audio signals. 5,701,346, Cl. 381-18.000.
Herwegh, Felix; Weide, Nils Holger; and Schumann, Wolfgang, to Barmag AG. Melt line for spin beam. 5,700,491, Cl. 425-72.200.
Hess, Clarence E., to Restorative Care of America Incorporated. Device for correcting ankle contractures. 5,700,237, Cl. 602-27.000.
Hessbrüggen, Norbert; and Steinbach, Heinz, to EMAG-Maschinen Vertriebs- und Service GmbH. Machine tool with a plurality of spindles. 5,699,598, Cl. 29-27.00C.
Hetzler, Kevin George: *See—*
Gillberg-LaForce, Gunilla Elsa; Hetzler, Kevin George; and Jacobs, Rob Lee, 5,700,531, Cl. 428-36.100.
Heubner, Wilhelm, to Fahrzeugtechnik Ebern GmbH. Hydraulic braking system, especially for motor vehicles. 5,700,067, Cl. 303-9.000.
Hewel, Manfred; and Dalla Torre, Hans, to EMS-Inventa AG. Copolyamides with long-chain polyamide units. 5,700,900, Cl. 528-335.000.
Hewlett-Pacard Company: *See—*
Mueller, Gerd O.; and Mueller-Mach, Regina B., 5,700,592, Cl. 428-690.000.
Hewlett-Packard Company: *See—*
Adamic, Raymond J., 5,700,317, Cl. 106-31.580.
Albrecht, Alan R., 5,701,305, Cl. 371-20.100.
Baney, Douglas M., 5,700,949, Cl. 73-1.00R.
Neudeck, Alexander J., 5,701,335, Cl. 377-69.000.
Wardwell, Robert H., 5,701,086, Cl. 324-762.000.
Webb, Peter; and Verdonk, Edward, 5,699,806, Cl. 128-667.060.
Wenzel, Donald E., 5,700,315, Cl. 106-31.580.
Hewlin, John P.: *See—*
Right, Robert W.; Costa, Hilario S.; and Hewlin, John P., 5,701,115, Cl. 340-286.050.
Heydweiller, Joachim: *See—*
Heckel, Horst; Skaletz, Detlef; Wagner, Bruno; and Heydweiller, Joachim, 5,700,556, Cl. 428-297.400.
Heyer, Michael H. J.: *See—*
Davidson, Russell K.; Heyer, Michael H. J.; and Masters, James C., 5,700,055, Cl. 297-378.120.
Heywang-Koebrunner, Sylvia, to Siemens Aktiengesellschaft. Stereotactic examination arrangement for conducting magnetic resonance examinations. 5,699,800, Cl. 128-653.200.
Hibbetts, Bryon: *See—*
Bestgen, Michael J.; Kramer, Richard B.; Moulden, Daniel P.; Barbee, Chris; and Hibbetts, Bryon, 5,699,894, Cl. 198-678.100.
Hibino, Hideo: *See—*
Yokoyama, Norikazu; Kazami, Kazuyuki; Yamazaki, Youichi; and Hibino, Hideo, 5,701,529, Cl. 396-310.000.
Hidaka, Hideto; and Hirose, Masakazu, to Mitsubishi Denki Kabushiki Kaisha. Data output circuit with reduced output noise. 5,701,090, Cl. 326-32.000.
Hiejima, Katsuhiro: *See—*
Miyauchi, Hidekazu; and Hiejima, Katsuhiro, 5,700,251, Cl. 604-264.000.
Hierold, Christofer: *See—*
Klose, Helmut; Biebl, Markus; Scheiter, Thomas; and Hierold, Christofer, 5,700,702, Cl. 437-34.000.
Higashiho, Mitsuhiro, to Fujitsu Limited. Charge-pump type booster circuit. 5,701,096, Cl. 327-536.000.
Highland Industries, Inc.: *See—*
Chiou, Joseph J., 5,700,532, Cl. 428-36.100.
Highman, Timothy J.; Smerdel, Michael E.; and Behm, Stephen M., to Amresco Inc. Crosslinked polyacrylamide gels with high monomer: crosslinker ratios. 5,700,365, Cl. 204-469.000.
Higuchi, Fumii; Ianni, John J.; Smith, Fraser S.; Hawkins, Michael G.; and Leonardo, Joseph L., to Xerox Corporation. Extruder die plate with removable splitters. 5,700,413, Cl. 264-145.000.
Higuchi, Haruhiko; Miyasaka, Kenji; and Miyauchi, Norio, to Citizen Watch Co., Ltd. Power supply unit for electronic appliances. 5,701,278, Cl. 368-204.000.
Hikawa, Tetsuo: *See—*
Takata, Akira; Hikawa, Tetsuo; Sawada, Takashi; Yiu, Tom Dang-hsing; and Ni, Ful-Long, 5,700,975, Cl. 174-52.400.
Hikichi, Naoto: *See—*
Yamauchi, Satoshi; Tamura, Hiroshi; Katooka, Takashi; Tsumura, Naoki; Hikichi, Naoto; Narumi, Chihiro; Ezaki, Takashi; Kudo, Shozo; and Ooguro, Yoshihisa, 5,701,497, Cl. 395-753.000.
Hikosaka, Masaru: *See—*
Kaji, Masanori; Ono, Masayosi; Takabatake, Yosinobu; Kaido, Yosinori; Haga, Takahiro; and Hikosaka, Masaru, 5,701,067, Cl. 320-2.000.
Hilbert, Thomas K.: *See—*
Loffus, Kevin D.; Hilbert, Thomas K.; Roets, David A.; and Livadas, Jerry E., 5,701,550, Cl. 399-44.000.
Hildebrandt, Donald W.: *See—*
Bonnema, James; Wang, Wen Der; Demarest, Scott W.; Furner, Paul E.; and Hildebrandt, Donald W., 5,700,430, Cl. 422-125.000.
Hill, Darrell; Fan, Shou-Kong; and Khatibzadeh, Ali, to Texas Instruments Incorporated. Method for reducing junction capacitance and increasing current gain in collector-up bipolar transistors. 5,700,701, Cl. 437-31.000.
Hill, Matthew; and Hill, N. Michele. Seismic anchoring device for equipment. 5,699,993, Cl. 248-680.000.
Hill, N. Michele: *See—*
Hill, Matthew; and Hill, N. Michele, 5,699,993, Cl. 248-680.000.
Hille, Thomas; and Deurer, Lothar, to LTS Lohman Therapie-Systeme GmbH & Co. KG. Transdermal therapeutic system comprising galanthamine as active component. 5,700,480, Cl. 424-448.000.
Hilti Aktiengesellschaft: *See—*
Bongers-Ambrosius, Hans-Werner; and Eichhorn, Jörg, 5,700,018, Cl. 279-19.400.
Himmelsbach, Frank: *See—*
Pieper, Helmut; Austel, Volkhard; Himmelsbach, Frank; Linz, Günter; Guth, Brian; and Weisenberger, Johannes, 5,700,801, Cl. 514-252.000.
Hine, Nathan P.: *See—*
Moynihan, Edward R.; Gailus, David W.; Palifka, Robert G.; Hoisington, Paul A.; Hine, Nathan P.; Adams-Brady, David; Biggs, Melvin L.; McDonald, Marlene M.; Barss, Steven H.; Mackay, Diane; Paulson, Bruce A.; and Mackay, Stephen C., 5,701,148, Cl. 347-92.000.
Hineno, Satoshi; and Andoh, Masaki, to Sony Corporation. Optical head with a plural layers coated beam splitter for light components separation. 5,701,287, Cl. 369-110.000.
Hinterwaldner, Rudolph; and Weldes, Helmut H., to Permethyl Specialties, L.L.C. Water soluble, biodegradable polymeric materials for skin care, hair care and cosmetic applications. 5,700,455, Cl. 424-70.140.
Hinzpeter, Matthias: *See—*
Trauth, Bernhard; Hinzpeter, Matthias; Doppler, Clemens; and Russmann, Eberhard, 5,700,639, Cl. 435-6.000.
Hirabara, Shoji: *See—*
Fujita, Makoto; Yamamoto, Yukio; Sakate, Nobuo; and Hirabara, Shoji, 5,701,576, Cl. 419-29.000.
Hirabayashi, Hiromitsu: *See—*
Akiyama, Yuji; Hirabayashi, Hiromitsu; Nagoshi, Shigeyasu; Arai, Atsushi; Kurata, Tetsuji; Sugimoto, Hitoshi; and Matsubara, Miyuki, 5,701,146, Cl. 347-26.000.
Hirai, Hiroyuki; and Mihara, Yuji, to Fuji Photo Film Co., Ltd. Platemaking process with heat developable silver salt diffusion transfer. 5,700,622, Cl. 430-203.000.
Hirai, Masana: *See—*
Yamada, Yukio; Asami, Osamu; Sugiyama, Hidehiko; Idekoba, Chie; Hoshino, Fumihiko; Hirai, Masana; Kajino, Tsutomu; Imaeda, Takao; and Sarai, Kiyoko, 5,700,659, Cl. 435-69.100.
Hiraishi, Atsushi: *See—*
Ikeda, Shuji; Meguro, Satoshi; Hashiba, Soichiro; Kuramoto, Isamu; Koike, Atsuyoshi; Sasaki, Katsuro; Ishibashi, Koichiro; Yamanaka, Toshiaki; Hashimoto, Naotaka; Moriwaki, Nobuyuki; Takahashi, Shigeru; Hiraishi, Atsushi; Kobayashi, Yutaka; and Yukutake, Seigou, 5,700,704, Cl. 437-52.000.
Hiraku, Kenji: *See—*
Nogami, Tadahiko; Nakamura, Ichiro; Hiraku, Kenji; Sadamori, Hiroyuki; Yasuda, Kenichi; Narita, Kenjiro; Horii, Kenji; and Shimogama, Hironori, 5,699,693, Cl. 72-199.000.
Hiramatsu, Nobutaka; Sugita, Mitsuru; Mizuno, Yoshikazu; and Shibayama, Takayuki, to Daido Metal Company Ltd. Bearing structure. 5,700,093, Cl. 384-276.000.
Hirano, Mitsuhisa: *See—*

Yamada, Hisato; Hirano, Mitsuhisa; and Kojima, Yasukazu, 5,699,749, Cl. 114-270.000.
Hirano, Tadayoshi: *See—*
Ikeda, Atsuhiko; Ozaki, Masami; Honami, Reijiro; Yumita, Takashi; Yano, Hiroyuki; Nakano, Yuki; Kurihara, Yutaka; and Hirano, Tadayoshi, 5,700,824, Cl. 514-383.000.
Hirano, Tameyoshi: *See—*
Hasegawa, Fumihiko; Kobayashi, Makoto; and Hirano, Tameyoshi, 5,700,179, Cl. 451-41.000.
Hirayama, Yoshiyuki: *See—*
Yamashita, Shigeki; Hirayama, Yoshiyuki; and Suzuki, Kazuhiro, 5,701,505, Cl. 395-800.000.
Hiroki, Toyohisa; and Suzuki, Tadashi, to Toska Co., Ltd.; and Optec Co., Ltd. Method of molding synthetic resin and apparatus for use therein. 5,700,415, Cl. 264-318.000.
Hirose, Masakazu: *See—*
Hidaka, Hideto; and Hirose, Masakazu, 5,701,090, Cl. 326-32.000.
Hirose, Tatsuya: *See—*
Hoshino, Tatsuyuki; Ban, Takashi; Ban, Takahisa; and Hirose, Tatsuya, 5,699,673, Cl. 62-93.000.
Hiroshima, Koichi; Nishimura, Katsuhiko; Kosaka, Toru; and Yoda, Yasuo, to Canon Kabushiki Kaisha. Image forming apparatus having dielectric constant relationship between image bearing member, intermediate transfer member and contact transfer device. 5,701,568, Cl. 399-302.000.
Hirota, Kunio, to M.P.G. Co. Ltd. Food supplement comprising a mineral complex and a method for its production. 5,700,503, Cl. 426-74.000.
Hirschmann, Ralph F.; Sprengeler, Rolando A.; and Nutt, Ruth F., to University of Pennsylvania, The Trustees of the. Synthetic somatostatin mimics. 5,700,905, Cl. 530-311.000.
Hirth, Klaus Peter; Schwartz, Donna Pruess; Mann, Elaina; Shawver, Laura Kay; Keri, Gyorgi; Szekely, Istvan; Bajor, Tamas; Haimichael, Janis; Orfi, Laszlo; Levitzki, Alex; Gazit, Aviv; Ullrich, Axel; Lammers, Reiner; Kabbinavar, Fairooz F.; Slamon, Dennis; and Tang, Peng Cho, to University of California, The Regents of the. Treatment of platelet derived growth factor related disorders such as cancers. 5,700,822, Cl. 514-380.000.
Hirth, Klaus Peter; Schwartz, Donna Pruess; Mann, Elaina; Shawver, Laura Kay; Kéri, György; Székely, István; Bajor, Tamás; Haimichael, Janis; Orfi, László; Levitzki, Alex; Gazit, Aviv; Ullrich, Axel; and Lammers, Reiner, to Sugen, Inc.; Biosignal L.T.D.; Yissum Research Development Company, Hebrew University of Jerusalem; and Max-Planck-Gesellschaft zur Forderung der Wissenschaften E.V. Treatment of platelet derived growth factor related disorders such as cancers. 5,700,823, Cl. 514-380.000.
Hiruma, Kenji: *See—*
Matsumoto, Hidetoshi; Yazawa, Masamitsu; and Hiruma, Kenji, 5,701,019, Cl. 257-192.000.
Hishiyama, Toru: *See—*
Moriya, Yukio; Koyanagi, Satoru; Fujimura, Tetsuya; Nagahama, Masayuki; Yamazaki, Kazuyuki; and Hishiyama, Toru, 5,699,873, Cl. 180-402.000.
Hitachi Cable, Ltd.: *See—*
Kumagai, Tatsuya; Kajioka, Hiroshi; Kobayashi, Osamu; Akiyama, Munehiro; Oho, Shigeru; and Sonobe, Hisao, 5,701,177, Cl. 356-350.000.
Hitachi Car Engineering Co., Ltd.: *See—*
Saito, Yasuo; Tahara, Shigenori; Yamada, Hiroyuki; and Hohkita, Atsushi, 5,699,768, Cl. 123-400.000.
Hitachi Chemical Company, Ltd.: *See—*
Kakumaru, Hajime, 5,700,629, Cl. 430-325.000.
Hitachi Denshi Kabushiki Kaisha: *See—*
Eto, Yoshizumi; Murata, Nobuo; Tanabe, Kazuhiro; and Nisikawa, Hiroyuki, 5,701,581, Cl. 455-5.100.
Hitachi Koki Co., Ltd.: *See—*
Mochizuki, Takeshi; and Saito, Susumu, 5,701,190, Cl. 359-205.000.
Takuma, Yasuo, 5,701,570, Cl. 399-343.000.
Tsujita, Akio; Anzai, Masayasu; and Kawanishi, Tsuneaki, 5,701,560, Cl. 399-159.000.
Hitachi, Ltd.: *See—*
Arita, Setsuo; Ito, Tetsuo; Ohga, Yukiharu; Ujita, Hiroshi; Murata, Fumio; Miyake, Masao; and Nishizawa, Yasuo, 5,701,394, Cl. 395-11.000.
Fujiwara, Shinji, 5,701,457, Cl. 395-608.000.
Hanaoka, Koumei; Sakurai, Naoki; and Mori, Mutsuhiro, 5,701,018, Cl. 257-140.000.
Hasegawa, Norio; Terasawa, Tsuneo; Fukuda, Hiroshi; Hayano, Katsuya; Imai, Akira; Moniwa, Akemi; and Okazaki, Shinji, 5,700,601, Cl. 430-5.000.
Ikeda, Shuji; Meguro, Satoshi; Hashiba, Soichiro; Kuramoto, Isamu; Koike, Atsuyoshi; Sasaki, Katsuro; Ishibashi, Koichiro; Yamanaka, Toshiaki; Hashimoto, Naotaka; Moriwaki, Nobuyuki; Takahashi, Shigeru; Hiraishi, Atsushi; Kobayashi, Yutaka; and Yukutake, Seigou, 5,700,704, Cl. 437-52.000.
Inoue, Atsushi; Kaku, Nobuyuki; and Sasaki, Takashi, 5,701,214, Cl. 360-71.000.
Kimura, Junichi; and Kinoshita, Taizo, 5,701,160, Cl. 348-413.000.
Kumagai, Tatsuya; Kajioka, Hiroshi; Kobayashi, Osamu; Akiyama, Munehiro; Oho, Shigeru; and Sonobe, Hisao, 5,701,177, Cl. 356-350.000.
Matsumoto, Hidetoshi; Yazawa, Masamitsu; and Hiruma, Kenji, 5,701,019, Cl. 257-192.000.
Meguro, Satoshi; Uchibori, Kiyofumi; Suzuki, Norio; Motoyoshi, Makoto; Koike, Atsuyoshi; Yamanaka, Toshiaki; Sakai, Yoshio; Kaga, Toru; Hashimoto, Naotaka; Hashimoto, Takashi; Honjou, Shigeru; and Minato, Osamu, 5,700,705, Cl. 437-52.000.
Nakagawa, Takayuki, 5,701,434, Cl. 395-484.000.
Nakahara, Shigeru, 5,701,425, Cl. 395-376.000.
Nogami, Tadahiko; Nakamura, Ichiro; Hiraku, Kenji; Sadamori, Hiroyuki; Yasuda, Kenichi; Narita, Kenjiro; Horii, Kenji; and Shimogama, Hironori, 5,699,693, Cl. 72-199.000.
Oguchi, Satoshi; Ishihara, Masamichi; Ito, Kazuya; Murakami, Gen; Anjoh, Ichiro; Sakuta, Toshiyuki; Yamaguchi, Yasunori; Kasama, Yasuhiro; Udagawa, Teru; Miyamoto, Eiji; Matsuno, Youichi; Satoh, Hiroshi; and Nozoe, Atsusi, 5,701,031, Cl. 257-686.000.
Oguma, Toshio; Okazaki, Yoshinobu; Tada, Osamu; and Yokotani, Shigeki, 5,701,443, Cl. 395-500.000.
Saito, Yasuo; Tahara, Shigenori; Yamada, Hiroyuki; and Hohkita, Atsushi, 5,699,768, Cl. 123-400.000.
Takeda, Yukiko; Tanabe, Shiro; and Wakayama, Kazuko, 5,701,412, Cl. 395-200.010.
Takuma, Yasuo, 5,701,570, Cl. 399-343.000.
Taniyama, Akira; Morijiri, Makoto; Tanaka, Haruko; Yuito, Isamu; Ashida, Eiji; Koyanagi, Hiroaki; Tanabe, Hideo; and Kobayashi, Tetsuo, 5,701,221, Cl. 360-113.000.
Hitz, David: *See—*
Cheng, Yu-Ping; and Hitz, David, 5,701,516, Cl. 395-842.000.
Hiwatashi, Yutaka; Matsuno, Koji; Takahashi, Akira; and Matsuura, Munenori, to Fuji Jukogyo Kabushiki Kaisha. Braking force control system and the method thereof. 5,700,073, Cl. 303-146.000.
Hlady, Vladimir; Pungor, Andras; and Stroup, Eric W., to University of Utah Research Foundation. Method for mapping mechanical property of a material using a scanning force microscope. 5,700,953, Cl. 73-105.000.
HM Electronics: *See—*
Stanford, Thomas H.; Sahne, Farhad Noroozi; Riches, Thomas P.; and O'Neill, Robert, 5,701,356, Cl. 381-187.000.
Ho, Derek Wan Hok: *See—*
Cornell, Julie Eileen; Diaz, Jorge Lazaro; Ho, Derek Wan Hok; Nguyen, Son Duc; and Tran, Cuong Huu, 5,701,408, Cl. 395-183.140.
Ho, Jim Yew-Wah, to Canada, Her Majesty the Queen in right of, as represented by the Minister of National Defence. Fluorescent biological particle detection system. 5,701,012, Cl. 250-461.200.
Ho, Kuo-Ping; and Chieup, Ping-Lien, to Ho, Kuo-Ping. Valve for a water dispenser for bicyclists. 5,699,933, Cl. 220-703.000.
Hoberg, Heinz: *See—*
Kienow, Ekkehard; Morun, Bernd; Schwertmann, Thomas; and Hoberg, Heinz, 5,700,441, Cl. 423-244.070.
Hochman, Daryl; and Haglund, Michael M., to University of Washington. Method for optically imaging solid tumor tissue. 5,699,798, Cl. 128-653.100.
Hockley, Des, to Mr. Safety Check Systems Inc. Brake adjustment indicator. 5,699,880, Cl. 188-1.110.
Hodgson, John Edward; and Burnham, Martin Karl Russell, to SmithKline Beecham, p.l.c. Polynucleotide encoding saliva binding protein. 5,700,928, Cl. 536-23.700.
Hoebener, Karl Grant: *See—*
Chong, Ku Ho; Crockett, Charles Hayden, Jr.; Dunn, Stephen Alan, deceased; Hoebener, Karl Grant; and McMaster, Michael George, 5,699,613, Cl. 29-852.000.
Hoechst Aktiengesellschaft: *See—*
Alberti, Klaus; Ritter, Eberhard, deceased; Westphal, Frank; and Wehmeier, Guido, 5,699,840, Cl. 141-313.000.
Dolle, Volker; Rohrmann, Jürgen; Winter, Andreas; and Antberg, Martin, 5,700,896, Cl. 526-351.000.
Frisch, Gerhard; and Damo, Zoltan, 5,700,472, Cl. 424-405.000.
Heckel, Horst; Skaletz, Detlef; Wagner, Bruno; and Heydweiller, Joachim, 5,700,556, Cl. 428-297.400.
Krone, Volker; Magerstädt, Michael; Walch, Axel; Grüner, Albrecht; and Hoffmann, Dieter, 5,700,459, Cl. 424-78.080.
Metzger, Jörg; Wiesmüller, Karl-Heinz; and Jung, Günther, 5,700,910, Cl. 530-338.000.
Rösch, Wolfgang; Sohn, Erich; Bauer, Klaus; and Bieringer, Hermann, 5,700,758, Cl. 504-106.000.
Wagner, Hans; and Espenschied, Bernd, 5,700,881, Cl. 525-440.000.
Winter, Andreas; Spaleck, Walter; and Bachmann, Bernd, 5,700,886, Cl. 526-119.000.
Hoechst Celanese Corporation: *See—*
Wang, Tao; and Broussard, Jerry A., 5,700,753, Cl. 502-330.000.
Hoekstra, Eric, to Mascotech, Inc. Buffered trailer light converter. 5,701,116, Cl. 340-431.000.
Hofer, Henry Z.: *See—*
Beckett, Arnold H.; Swon, James E.; and Hofer, Henry Z., 5,700,087, Cl. 366-241.000.
Hofer, Kurt G.; and Yang, Li-xi, to Florida State University. Radiosensitizing diamines and their pharmaceutical preparations. 5,700,825, Cl. 514-397.000.
Hoff, Joseph W.; Finnicum, Douglas S.; and Weinstein, Steven J., to Eastman Kodak Company. High speed coating starts using a shear thinning top layer. 5,700,524, Cl. 427-402.000.
Hoffmann, Dieter: *See—*
Krone, Volker; Magerstädt, Michael; Walch, Axel; Grüner, Albrecht; and Hoffmann, Dieter, 5,700,459, Cl. 424-78.080.
Hoffmann-La Roche Inc.: *See—*

Klaus, Michael; and Mohr, Peter, 5,700,836, Cl. 514-544.000.
Hohkita, Atsushi: *See—*
Saito, Yasuo; Tahara, Shigenori; Yamada, Hiroyuki; and Hohkita, Atsushi, 5,699,768, Cl. 123-400.000.
Hohmann, Andreas: *See—*
Schuhmacher, Rudolf; Dralle-Voss, Gabriele; Oppenlaender, Knut; Wegner, Brigitte; and Hohmann, Andreas, 5,700,351, Cl. 162-75.000.
Hoisington, Paul A.: *See—*
Moynihan, Edward R.; Gailus, David W.; Palka, Robert G.; Hoisington, Paul A.; Hine, Nathan P.; Adams-Brady, David; Biggs, Melvin L.; McDonald, Marlene M.; Barss, Steven H.; Mackay, Diane; Paulson, Bruce A.; and Mackay, Stephen C., 5,701,148, Cl. 347-92.000.
Hokda Giken Kogyo Kabushiki Kaisha: *See—*
Sano, Hisashi; Nakamura, Sou; Sawada, Hideshi; Adachi, Shuichi; and Kasuya, Hideki, 5,701,349, Cl. 381-71.000.
Holden, Carl Lawrence: *See—*
Lungershausen, Arnold; and Holden, Carl Lawrence, 5,701,015, Cl. 250-495.100.
Holiday Innovations, Inc.: *See—*
Mengle, Jay S.; Mitchell, Baker A., Jr.; and Mengle, Marsha A., 5,700,081, Cl. 362-123.000.
Holland, Shannon: *See—*
Othmer, Konstantin; and Holland, Shannon, 5,701,138, Cl. 345-132.000.
Hollis, Thomas J., to Hollis, Thomas J. Free-flow buoyancy check valve for controlling flow of temperature control fluid from an overflow bottle. 5,699,759, Cl. 123-41.080.
Homberg, William D., to Rainin Instrument Co., Inc. Manual pipette with magnet assist. 5,700,959, Cl. 73-864.160.
Honami, Reijiro: *See—*
Ikeda, Atsuhiko; Ozaki, Masami; Honami, Reijiro; Yumita, Takashi; Yano, Hiroyuki; Nakano, Yuki; Kurihara, Yutaka; and Hirano, Tadayoshi, 5,700,824, Cl. 514-383.000.
Honda Giken Kogyo Kabushiki Kaisha: *See—*
Miyakawa, Futoshi; Kawamata, Masahiro; Hamada, Yoshiaki; Asao, Kosuke; and Kajikawa, Tsuneo, 5,699,872, Cl. 180-291.000.
Sugimoto, Yoichi; Urai, Yoshihiro; and Matsuda, Shohei, 5,700,074, Cl. 303-186.000.
Honda, Satoshi: *See—*
Ichikawa, Atsuko; Honda, Satoshi; Katoh, Takayuki; and Ishisaka, Akira, 5,701,377, Cl. 385-124.000.
Honda, Takaaki; and Mitani, Shinichi, to Toshiba Machine Co., Ltd. Zigzag heating device with downward directed connecting portions. 5,700,992, Cl. 219-466.000.
Honda, Takao; Yanagida, Makoto; Arahira, Fumihiro; and Yamamoto, Takeo, to Canon Kabushiki Kaisha. Image forming apparatus including control means for controlling an output from en electrical power source to a charging member for charging an image bearing member. 5,701,551, Cl. 399-50.000.
Honda, Tsutomu; Itoh, Hisanori; Ueno, Takuya; Mori, Junji; Matsumoto, Hiroyuki; Hasegawa, Yasushi; and Kajita, Hideo, to Minolta Co., Ltd. Waterproof camera. 5,701,518, Cl. 396-29.000.
Honeywell Inc.: *See—*
Roth, Roger R., 5,701,058, Cl. 315-158.000.
Hong, Chen Fu-In. Miniature fan assembly for outputting air in a certain direction. 5,699,854, Cl. 165-121.000.
Hong, Gary: *See—*
Chen, Hwi-Huang; and Hong, Gary, 5,700,708, Cl. 437-52.000.
Hong, Gilbert H. Thin film and interferometric optical disk media and mass production method for fabricating such and multilayer CDS. 5,700,539, Cl. 428-64.100.
Honjou, Shigeru: *See—*
Meguro, Satoshi; Uchibori, Kiyofumi; Suzuki, Norio; Motoyoshi, Makoto; Koike, Atsuyoshi; Yamanaka, Toshiaki; Sakai, Yoshio; Kaga, Toru; Hashimoto, Naotaka; Hashimoto, Takashi; Honjou, Shigeru; and Minato, Osamu, 5,700,705, Cl. 437-52.000.
Honoré , Tage: *See—*
Biere, Helmut; Huth, Andreas; Rahtz, Dieter; Schmiechen, Ralph; Seidelmann, Dieter; Kehr, Wolfgang; Schneider, Herbert Hans; Engelstoft, Mogens; Hansen, Bondo John; Waetjen, Frank; and Honoré , Tage, 5,700,808, Cl. 514-292.000.
Hooks, Robert M.: *See—*
Barnes, John Franklin; Gutzke, Karl N.; and Hooks, Robert M., 5,700,765, Cl. 508-378.000.
Hooper, Douglas: *See—*
Tisen, William J.; Singal, Pawan; Hooper, Douglas; and Wendt, Alan C., 5,699,641, Cl. 52-506.070.
Hopkins, Chris E.: *See—*
Olivera, Baldomero M.; Rivier, Jean E.F.; Cruz, Lourdes J.; Abogadie, Fe; Hopkins, Chris E.; Dykert, John; and Torres, Josep L., 5,700,778, Cl. 514-12.000.
Hopkins, Patrick W.: *See—*
Caterino, Garret J.; Hopkins, Patrick W.; and Strizhak, Elliott S., 5,701,525, Cl. 396-132.000.
Höppner, Klaus: *See—*
Förderer, Karl; Höppner, Klaus; and Fricke, Gerd, 5,699,865, Cl. 173-162.200.
Horemans, Luc; and Kaerts, Eric, to Agfa-Gevaert N.V. Thermal dye transfer printing process for reducing curling of a print sheet. 5,701,150, Cl. 347-212.000.
Hori, Kenjiro; Akiyama, Satoshi; Takubo, Takefumi; and Kishida, Tetsuo, to Canon Kabushiki Kaisha. Color image forming apparatus and method thereof. 5,701,182, Cl. 358-296.000.
Hori, Naomi: *See—*
Takiguchi, Osamu; Hori, Naomi; and Oda, Takashi, 5,700,892, Cl. 526-306.000.
Hori, Seiji, to Kabushiki Kaisha Tokai-Rika-Denki-Seisakusho. Gear mechanism and pretensioner. 5,699,976, Cl. 242-374.000.
Horiguchi, Chiyoharu: *See—*
Yasukawa, Manabu; Horiguchi, Chiyoharu; and Koishi, Musubu, 5,700,084, Cl. 362-275.000.
Horii, Kenji: *See—*
Nogami, Tadahiko; Nakamura, Ichiro; Hiraku, Kenji; Sadamori, Hiroyuki; Yasuda, Kenichi; Narita, Kenjiro; Horii, Kenji; and Shimogama, Hironori, 5,699,693, Cl. 72-199.000.
Horikiri, Yataro, to Sakura Hobby Craft Co., Ltd. Method of producing a decorative plate. 5,700,521, Cl. 427-258.000.
Horinouchi, Shougo: *See—*
Itou, Toshifumi; Shimazaki, Hiromitsu; Arita, Masaaki; and Horinouchi, Shougo, 5,701,129, Cl. 343-873.000.
Horio, Hirotsugu: *See—*
Shimizu, Takao; and Horio, Hirotsugu, 5,699,955, Cl. 228-194.000.
Horiuchi, Ryuya: *See—*
Toyoshima, Kumao; Horiuchi, Ryuya; Yamauchi, Kiyoshi; Yamamoto, Tadashi; and Igarashi, Koichi, 5,700,678, Cl. 435-233.000.
Horiuchi, Shigeaki, to Isuzu Motors Limited. Valve operating system for internal combustion engine. 5,699,762, Cl. 123-90.220.
Hörmann, Michael; Lupton, David Francis; Schielke, Jörg; and Schölz, Friedhold, to W.C. Heraeus GmbH. Method of manufacture of components made of sintered indium-tin-oxide solid-solution crystals. 5,700,418, Cl. 264-604.000.
Horn, Dieter: *See—*
End, Lutz; Horn, Dieter; and Lueddecke, Erik, 5,700,471, Cl. 424-400.000.
Horst, Gary E.; and French, Alan P., to Emerson Electric Co. Rotor position sensing in a dynamoelectric machine using coupling between machine coils. 5,701,064, Cl. 318-701.000.
Hortick, Nicholas P.: *See—*
Paugh, Edward C.; Leafstone, Harley W.; and Hortick, Nicholas P., 5,699,975, Cl. 242-371.000.
Horton, Eric P., to Perfect Pass Control Systems Incorporation. Speed control system. 5,700,171, Cl. 440-87.000.
Horton, Richard F., to Symbiosis Corporation. Monolithic relay lens system particularly suited for use in an endoscope. 5,701,200, Cl. 359-435.000.
Horx, Manfred: *See—*
Klatt, Bruno; Horx, Manfred; Koelling, Hartmut; Berndt, Karlheinz; Krueger, Gerhard; Kuenne, Hans-Joachim; Moerl, Lothar; and Backhauss, Lothar, 5,700,572, Cl. 428-357.000.
Hosaka, Masao; Kimura, Yoshimasa; and Sakamaki, Hisashi, to Canon Kabushiki Kaisha. Data processing apparatus which operates in a plurality of operation modes and includes first and second monitoring means. 5,701,481, Cl. 395-676.000.
Hoshi, Hiroaki; Matsumura, Susumu; Yamamoto, Masakuni; and Yamaguchi, Eiji, to Canon Kabushiki Kaisha. Optical information recording-reproducing apparatus including a light beam detector being divided by a division line extending in a direction perpendicular to an information track. 5,701,279, Cl. 369-13.000.
Hoshino, Fumihiko: *See—*
Yamada, Yukio; Asami, Osamu; Sugiyama, Hidehiko; Idekoba, Chie; Hoshino, Fumihiko; Hirai, Masana; Kajino, Tsutomu; Imaeda, Takao; and Sarai, Kiyoko, 5,700,659, Cl. 435-69.100.
Hoshino, Kazuhisa: *See—*
Uyama, Haruo; Harada, Takahiro; Kano, Mitsuru; Matsudaira, Nagahisa; Hoshino, Kazuhisa; Kitamura, Satoshi; Noguchi, Fuminobu; and Shikakubo, Tsutomu, 5,700,550, Cl. 428-212.000.
Hoshino, Tatsuyuki; Ban, Takashi; Ban, Takahisa; and Hirose, Tatsuya, to Kabushiki Kaisha Toyoda Jidoshokki Seisakusho. Compressed dry air supply system. 5,699,673, Cl. 62-93.000.
Hosotani, Osamu, to Mitsubishi Denki Kabushiki Kaisha. Microcomputer having ROM program which can be altered. 5,701,506, Cl. 395-800.000.
Hosoya, Noriyuki: *See—*
Takesawa, Shingo; Hosoya, Noriyuki; and Sasaki, Masatomi, 5,700,372, Cl. 210-321.810.
Hosoya, Takeshi: *See—*
Nogami, Tatsuya; Sakai, Rie; and Hosoya, Takeshi, 5,700,391, Cl. 252-299.010.
Hospital for Joint Diseases: *See—*
Margulies, Joseph Y., 5,700,292, Cl. 623-17.000.
Hotta, Yoshitsugu: *See—*
Fujii, Masumi; Suda, Taiichiro; Hotta, Yoshitsugu; Kitamura, Koichi; Jinno, Yukihiro; Mimura, Tomio; Shimojo, Shigeru; Iijima, Masaki; and Mitsuoka, Shigeaki, 5,700,437, Cl. 423-220.000.
House, Wayne D.: *See—*
Myers, David J.; Lewis, James D.; House, Wayne D.; and Schwarz, Karl E., 5,700,285, Cl. 623-1.000.
Howanski, John W.: *See—*
Bello, Salvatore H.; and Howanski, John W., 5,700,980, Cl. 174-146.000.
Howell, Stephen H.: *See—*

McElroy, Marlene D., deceased; Helinski, Donald R.; Wood, Keith V.; De Wet, Jeffrey R.; Ow, David W.; and Howell, Stephen H., 5,700,673, Cl. 435-189.000.
Hower, Glenn Roy; and Kumagai, Henry Y., to Lucent Technologies Inc. Apparatus and method for making integrated circuits. 5,700,725, Cl. 437-225.000.
Howlett, Gordon Phillip; and Reigler, John Norris, to Delco Electronics Corporation. Multipath interference reduction system and method. 5,701,345, Cl. 381-13.000.
Hoying, Richard C.: *See—*
Fisher, Jack W.; Hatfield, Lowell D.; Hoying, Richard C.; and Ray, James E., 5,700,933, Cl. 540-364.000.
Hsia, Liang-Choo; and Chang, Thomas, to Mosel Viltelic, Inc. Wafer metrology pattern integrating both overlay and critical dimension features for SEM or AFM measurements. 5,701,013, Cl. 250-491.100.
Hsieh, Bing R.: *See—*
Silence, Scott M.; Creatura, John A.; Hsieh, Bing R.; Ziolo, Ronald F.; and Ellis, Richard W., 5,700,615, Cl. 430-106.600.
Hsien, Ming-kun. Joypad circuit for playing PC games. 5,700,194, Cl. 463-37.000.
Hsiung, Han-Hsing; Chiou, Hsin-Hsiung; and Chiu, Sheng-Fu, to China Textile Institute. Device of removing trash and dust from raw cotton before carding in the preparatory by applying a high-voltage static electricity. 5,699,588, Cl. 19-66.00R.
Hsu, Chen-Chung; Chang, Tsun-Tsai; and Lin, Larry, to United Microelectronics Corporation. Method of manufacturing an SRAM load shield. 5,700,711, Cl. 437-60.000.
Hsu, Hua-Shan, to Smooth Ocean Enterprise Co., Ltd. Apparatus for adusting position of a machining unit on a chip carrier maker. 5,699,602, Cl. 29-335.000.
Hsu, Ken Y.: *See—*
Zucherman, James F.; and Hsu, Ken Y., 5,700,264, Cl. 606-79.000.
Hsu, Ying: *See—*
Carson, John C.; DeCaro, Robert E.; Hsu, Ying; and Miyake, Michael K., 5,701,233, Cl. 361-735.000.
Huang, Chen-Hsien. Waste food treatment apparatus. 5,699,728, Cl. 100-98.00R.
Huang, David: *See—*
Lee, Raphael C.; and Huang, David, 5,700,688, Cl. 435-287.100.
Huang, Jenn-Hwa; Thero, Christine; and Shiralagi, Kumar, to Motorola. Method of fabricating buried control elements in semiconductor devices. 5,700,703, Cl. 437-40.000.
Huang, Li-chu Chen. Foldable playyard connection device. 5,699,997, Cl. 256-26.000.
Huang, Miaoling: *See—*
Sargeant, Steven J.; Behan, Niall D.; Atherton, Dave; Yang, Sen; Huang, Miaoling; and Sun, Kang, 5,700,582, Cl. 420-476.600.
Huang, Shou-Yuan Richard: *See—*
Cheng, Yiu-Wah Eric; Du, Wei-Jen Jim; and Huang, Shou-Yuan Richard, 5,701,414, Cl. 395-200.090.
Huang, Tien-Tsai. Signal generating pressure gauge. 5,700,956, Cl. 73-735.000.
Huang, Yung-Sheng; and Tsai, Nun-Sian, to Taiwan Semiconductor Manufacturing Company Ltd. Multi-layered tungsten depositions for contact hole filling. 5,700,726, Cl. 437-643.000.
Huber, David R., to Ciena Corporation. Optical cable TV system. 5,701,186, Cl. 359-125.000.
Hucul, Dennis A.; and Hahn, Stephen F., to Dow Chemical Company, The. Process for hydrogenating aromatic polymers. 5,700,878, Cl. 525-333.300.
Hudson, Thomas H., to Timberjack Corporation. Rotatable side saw for tree processing apparatus. 5,699,712, Cl. 83-928.000.
Huff, Bob E., to Pass & Seymour, Inc. Snap-together wall plates for ganged electrical device installations. 5,700,978, Cl. 174-66.000.
Hughes Aircraft Company: *See—*
Harrison, R. Loyd; and Davies, Steven P., 5,701,482, Cl. 395-675.000.
Hughes Electronics: *See—*
Kurogi, Garrett Isao; and Swass, Matthew J., 5,699,611, Cl. 29-840.000.
Hughes, Kenneth E.; Masterson, David C.; Fink, David J.; Metz, Barbara A.; Pickett, Gordon E.; Gemmer, Paul M.; and Brody, Richard S., to Rampak Corporation. Paper strengthened with solubilized collagen and method. 5,700,353, Cl. 162-143.000.
Hughes, Kenneth E.: *See—*
Virnelson, Kevin M.; Hughes, Kenneth E.; Masterson, David C.; Fink, David J.; Metz, Barbara A.; Pickett, Gordon E.; Gemmer, Paul M.; and Brody, Richard S., 5,700,354, Cl. 162-143.000.
Hughes, Michael Franklin: *See—*
Gray, James Delwin; Hughes, Michael Franklin; and Lutes, Paul Joseph, 5,700,140, Cl. 418-104.000.
Hui, Chi Wai: *See—*
Tanaka, Minoru; and Hui, Chi Wai, 5,700,432, Cl. 422-146.000.
Hull, Harold L.; May, Galen J.; and May, John J. Blown fuse indicator circuit and fuse cap, including a method of use therefore. 5,701,118, Cl. 340-638.000.
Hummel, Peter; and Ortner, Robert, to MAN Roland Druckmaschinen AG. Device for the throw-on and throw-off of rollers. 5,699,737, Cl. 101-247.000.
Hummel-Marquardt, Heidi; Schmitz, Thomas; Kennecke, Mario; and Weber, Alfred, to Schering Aktiengesellschaft. Process for the production of arabinonucleotides. 5,700,666, Cl. 435-88.000.
Hund, Kerstin; Klein, Werner; Kördel, Werner; Görtz, Theo; and Schwarzer, Norbert, to Fraunhofer-Gesellschaft zur Forderung der Angewandten Forschung e.V. Traveling multi-functional disposal simulation installation. 5,700,109, Cl. 405-128.000.
Hung, Tsang-Chung, to Ruen Ryh Enterprise Co., Ltd. Water discharge controlling structure of a sprinkling gun. 5,699,968, Cl. 239-526.000.
Hung, Willaim M.: *See—*
Isharani, Jayanti V.; Hung, Willaim M.; and Su, Kai C., 5,700,394, Cl. 252-301.210.
Hunt, Kenneth Stephen, to LSI Logic Corporation. Differential signal receiver. 5,701,331, Cl. 375-316.000.
Hunter, Gregory: *See—*
Burchard, Thomas H.; Hunter, Gregory; Johnson, Kevin M.; Karg, Jeffery; and Bertrand, John E., 5,699,832, Cl. 137-614.200.
Hunter Industries, Inc.: *See—*
Scott, Loren W.; and Kulberg, Kurt, 5,699,962, Cl. 239-73.000.
Huntley, Graeme, to BOC Group plc, The. Diffusion pumps. 5,700,134, Cl. 417-153.000.
Huntsman Petrochemical Corporation: *See—*
Grigsby, Robert Allison, Jr.; and Zimmerman, Robert LeRoy, 5,700,846, Cl. 521-128.000.
Huq, Ruquiya Ismat Ara; and Dingwall, Andrew Gordon Francis, to Thomson Consumer Electronics S.A. Liquid crystal display driver with threshold voltage drift compensation. 5,701,136, Cl. 345-100.000.
Hur, Hun: *See—*
Lee, Jun Seok; Hur, Hun; and Song, Young Jin, 5,700,626, Cl. 430-296.000.
Hurlbut, Amy O.: *See—*
Downey, Walter J.; Sutterlin, Philip H.; Stewart, J. Marcus; and Hurlbut, Amy O., 5,701,240, Cl. 363-35.000.
Hurst, Achim; Winkler-Gwienek, Wladis; Buchholz, Berthold; Bendix, Dieter; and Entenmann, Gunther, to Boehringer Ingelheim KG. Resorbable mouldings and process for producing them. 5,700,901, Cl. 528-354.000.
Hurst, William D., to MEI Research, Inc. Method of improving head rice yield. 5,700,505, Cl. 426-312.000.
Huskey, Richard A.: *See—*
Logue, Daniel R.; Van Emmerik, Piet T.; Mann, Roger H.; Sun, Edward I.; Avalon, Gary A.; Caldwell, Carol A.; Chang, Eng-Pi; and Huskey, Richard A., 5,700,571, Cl. 428-352.000.
Huspeka, John A.; and Calcagni, Peter L., to Dover Industries Limited. Container with interlocking lid. 5,699,959, Cl. 229-125.260.
Hutchinson, Douglas K.; Barbachyn, Michael R.; Brickner, Steven J.; Gammill, Ronald B.; and Patel, Mahesh V., to Pharmacia & Upjohn Company. Oxazolidinone antimicrobials containing substituted diazine moieties. 5,700,799, Cl. 514-235.800.
Huth, Andreas: *See—*
Biere, Helmut; Huth, Andreas; Rahtz, Dieter; Schmiechen, Ralph; Seidelmann, Dieter; Kehr, Wolfgang; Schneider, Herbert Hans; Engelstoft, Mogens; Hansen, Bondo John; Waetjen, Frank; and Honoré , Tage, 5,700,808, Cl. 514-292.000.
Huver, Thomas; Friese, Carsten; Emmerling, Winfried; Kux, Michael; and Motzkat, Kerstin, to Henkel Kommanditgesellschaft auf Aktien. Low-odor adhesive composition comprising (meth) acrylates containing urethane groups. 5,700,891, Cl. 526-301.000.
Hwang, Joon, to Hyundai Electronics Industries Co., Ltd. Transistor in a semiconductor device and method of making the same. 5,700,700, Cl. 437-21.000.
Hybridon, Inc.: *See—*
Goodchild, John; and Leonard, Thomas E., 5,700,923, Cl. 536-23.100.
Hydro-Aire Division of Crane Company: *See—*
Cook, Robert D.; and Salamat, Bijan, 5,700,072, Cl. 303-135.000.
Hydro-Quebec: *See—*
Sanchez, Jean-Yves; Alloin, Fannie; and Masson, Jacqueline, 5,700,880, Cl. 525-403.000.
Hydroeek Corp.: *See—*
Wu, Mc-Gavour, 5,699,994, Cl. 251-129.030.
Hykes, Timothy W.; and Metzler, Joel, to Western Atlas Inc. Motorized spindle with indexing fixture. 5,700,186, Cl. 451-406.000.
Hyson, Morton Isaac. Device and method for treatment of headache. 5,700,238, Cl. 602-74.000.
Hyttinen, Mats: *See—*
Döfnäs, Lars; and Hyttinen, Mats, 5,701,241, Cl. 363-35.000.
Hyundai Electronics America: *See—*
Gearhardt, Kevin J.; and Pruehsner, Darrell L., 5,701,309, Cl. 371-25.100.
Pineda, Juan, 5,701,263, Cl. 364-725.000.
Hyundai Electronics Industries Co., Ltd.: *See—*
Choi, Jae Myoung, 5,701,273, Cl. 365-230.080.
Hwang, Joon, 5,700,700, Cl. 437-21.000.
Lee, Geum Ock; and Yang, Gyun Seog, 5,701,262, Cl. 364-724.190.
Hyundai Motor Company: *See—*
Lee, Un Koo, 5,700,025, Cl. 280-661.000.
Park, Seonghyon; Kim, Jinseong; and Park, Donghoon, 5,700,223, Cl. 475-269.000.
Ianni, John J.: *See—*
Higuchi, Fumii; Ianni, John J.; Smith, Fraser S.; Hawkins, Michael G.; and Leonardo, Joseph L., 5,700,413, Cl. 264-145.000.
Ichihara, Tatsuo: *See—*
Takenishi, Soichiro; Suzuki, Osamu; Yokomizo, Hirohiko; Ichihara, Tatsuo; Masuda, Gen; Nakajima, Namiko; and Komiya, Kazuko, 5,700,935, Cl. 544-139.000.

Ichikawa, Atsuko; Honda, Satoshi; Katoh, Takayuki; and Ishisaka, Akira, to Konica Corporation. Plastic light transmitting body, its production methods and apparatus. 5,701,377, Cl. 385-124.000.
Ichikawa, Toshio: *See*—
Koyama, Yasuji; and Ichikawa, Toshio, 5,700,674, Cl. 435-191.000.
Ichimura, Gen; and Noguchi, Masayoshi, to Sony Corporation. 1-bit signal processing apparatus capable of amplitude modulation and recording or reproducing apparatus having loaded thereon the signal processing apparatus. 5,701,124, Cl. 341-50.000.
Ichino, Tomio: *See*—
Urawa, Yoshio; Furukawa, Ken; Shimizu, Toshikazu; Yamagishi, Yoji; Tsurugi, Tomio; and Ichino, Tomio, 5,700,918, Cl. 546-14.000.
ICI Canada Inc.: *See*—
McNicol, Melvin Adam, 5,700,970, Cl. 102-332.000.
ICOS Corporation: *See*—
Kilgannon, Patrick D.; and Gallatin, W. Michael, 5,700,658, Cl. 435-69.100.
ICU Medical, Inc.: *See*—
Lopez, George A., 5,700,248, Cl. 604-249.000.
Ida, Frank; and DiScala, Luciano. Pump nurser for expelling air from disposable liners. 5,699,920, Cl. 215-11.300.
Ida, Michel; and Baptist, Robert, to Commissariat a l'Energie Atomique. Device for the insolation of micrometric and/or submicrometric areas in a photosensitive layer and a method for the creation of patterns in such a layer. 5,700,627, Cl. 430-311.000.
Ida, Tetsuya: *See*—
Takiguchi, Tsuyoshi; Okado, Kenji; Taya, Masaaki; Fujita, Ryoichi; Kanbayashi, Makoto; Iida, Wakashi; and Ida, Tetsuya, 5,700,617, Cl. 430-110.000.
Ide, Motoki: *See*—
Morita, Kazuo; and Ide, Motoki, 5,701,588, Cl. 455-38.400.
Ideal-Standard GmbH: *See*—
Bergmann, Konrad; Fait, Claudio; and Läller, Klaus-Jürgen, 5,699,964, Cl. 239-106.000.
Idekoba, Chie: *See*—
Yamada, Yukio; Asami, Osamu; Sugiyama, Hidehiko; Idekoba, Chie; Hoshino, Fumihiko; Hirai, Masana; Kajino, Tsutomu; Imaeda, Takao; and Sarai, Kiyoko, 5,700,659, Cl. 435-69.100.
Idemitsu Petrochemical Co., Ltd.: *See*—
Tanaka, Kenichi; and Takashige, Masao, 5,700,091, Cl. 383-63.000.
Idexx Laboratories, Inc.: *See*—
Croteau, Andrew J.; Pierson, Mark W.; Townsend, David E.; and Naqui, Ali, 5,700,655, Cl. 435-30.000.
Ido, Mikiya: *See*—
Shibazaki, Masaki; Ido, Mikiya; and Watanabe, Tohru, 5,700,534, Cl. 428-36.920.
Iehl, Brian D.: *See*—
Lee, Steven G.; Iehl, Brian D.; Manya, Omeroon; Schellinger, Michael J.; and D'Avello, Robert F., 5,701,589, Cl. 455-56.100.
Iga, Katsumi; Yanai, Shigeo; Okabe, Keiichiro; and Itoh, Masaki, to Takeda Chemical Industries, Ltd.; Advance Co., Ltd.; and Teikoku Hormone Mfg. Co., Ltd. Transdermal drug delivery process. 5,700,481, Cl. 424-449.000.
Igarashi, Koichi: *See*—
Toyoshima, Kumao; Horiuchi, Ryuya; Yamauchi, Kiyoshi; Yamamoto, Tadashi; and Igarashi, Koichi, 5,700,678, Cl. 435-233.000.
Igarashi, Yoshiaki: *See*—
Matsuura, Sadahiro; Satou, Shigeru; Kondou, Yasuhiro; and Igarashi, Yoshiaki, 5,701,066, Cl. 318-808.000.
IGEN International, Inc.: *See*—
Ghaed, Ali; Leland, Jonathan K.; Zoski, Glenn D.; Goodman, Jack E.; and Grosser, John T., 5,700,427, Cl. 422-52.000.
Ignatchenko, Georgi M.: *See*—
Dykhno, Igor S.; Krivtsun, Igor U.; and Ignatchenko, Georgi M., 5,700,989, Cl. 219-121.450.
Iguchi, Etsuko: *See*—
Sato, Mitsuru; Oomori, Katsumi; Ishikawa, Kiyoshi; Iguchi, Etsuko; and Kaneko, Fumitake, 5,700,625, Cl. 430-270.100.
Iguchi, Fumio, to Oji-Yuka Synthetic Paper Co., Ltd. Apparatus for draining liquid drops from tentering oven. 5,699,625, Cl. 34-62.000.
Ihara Chemical Industry Co. Ltd.: *See*—
Ikeda, Atsuhiko; Ozaki, Masami; Honami, Reijiro; Yumita, Takashi; Yano, Hiroyuki; Nakano, Yuki; Kurihara, Yutaka; and Hirano, Tadayoshi, 5,700,824, Cl. 514-383.000.
Iibuchi, Kouichi: *See*—
Ishiyama, Masaaki; Matsuura, Takeaki; Mihoya, Takashi; Fujimatsu, Shinya; Utsugi, Masayoshi; and Iibuchi, Kouichi, 5,700,867, Cl. 524-539.000.
Iida, Wakashi: *See*—
Takiguchi, Tsuyoshi; Okado, Kenji; Taya, Masaaki; Fujita, Ryoichi; Kanbayashi, Makoto; Iida, Wakashi; and Ida, Tetsuya, 5,700,617, Cl. 430-110.000.
Iijima, Masaki: *See*—
Fujii, Masumi; Suda, Taiichiro; Hotta, Yoshitsugu; Kitamura, Koichi; Jinno, Yukihiro; Mimura, Tomio; Shimojo, Shigeru; Iijima, Masaki; and Mitsuoka, Shigeaki, 5,700,437, Cl. 423-220.000.
Iino, Takashi: *See*—
Nagashima, Tetsuro; Kawanishi, Toshiharu; Okutani, Shigeaki; Nomura, Osamu; and Iino, Takashi, 5,701,436, Cl. 396-489.000.
Iizuka, Hiroaki: *See*—
Kawamura, Akihisa; Ishikawa, Satoshi; and Iizuka, Hiroaki, 5,700,153, Cl. 439-164.000.
Iizuka, Hitoshi: *See*—
Sagiyama, Tatsuya; Baba, Fumihiko; Saito, Kaname; Matsushima, Takashi; and Iizuka, Hitoshi, 5,700,951, Cl. 73-11.080.
Ikai, Keizo; Minami, Masaki; and Matsuno, Mitsuo, to Nippon Oil Co., Ltd. Method for producing a semiconducting material. 5,700,400, Cl. 252-513.000.
Ikari, Atsushi: *See*—
Izunome, Koji; Kawanishi, Souroku; Togawa, Shinji; Ikari, Atsushi; Sasaki, Hitoshi; and Kimura, Shigeyuki, 5,700,320, Cl. 117-19.000.
Ikari Corporation: *See*—
Nitta, Masao, 5,699,635, Cl. 47-57.500.
Ikeda, Atsuhiko; Ozaki, Masami; Honami, Reijiro; Yumita, Takashi; Yano, Hiroyuki; Nakano, Yuki; Kurihara, Yutaka; and Hirano, Tadayoshi, to Kumiai Chemical Industrial Co. Ltd.; and Ihara Chemical Industry Co. Ltd. Triazole derivatives, insecticide, acaricide and methods thereof. 5,700,824, Cl. 514-383.000.
Ikeda, Hitoshi: *See*—
Natsugari, Hideaki; Ikeda, Hitoshi; Ishimaru, Takenori; and Doi, Takayuki, 5,700,810, Cl. 514-307.000.
Ikeda, Shuji; Meguro, Satoshi; Hashiba, Soichiro; Kuramoto, Isamu; Koike, Atsuyoshi; Sasaki, Katsuro; Ishibashi, Koichiro; Yamanaka, Toshiaki; Hashimoto, Naotaka; Moriwaki, Nobuyuki; Takahashi, Shigeru; Hiraishi, Atsushi; Kobayashi, Yutaka; and Yukutake, Seigou, to Hitachi, Ltd. Process for fabricating a semiconductor integrated circuit device. 5,700,704, Cl. 437-52.000.
Ikegami, Hiroshi; Nishikawa, Yutaka; and Ando, Masanori, to Akebono Brake Industry Co., Ltd. Pad clip for disc brake. 5,699,882, Cl. 188-73.380.
Ikemoto Brush Industry Co., Ltd.: *See*—
Ikemoto, Shigeki, 5,699,904, Cl. 206-296.000.
Ikemoto, Shigeki, to Ikemoto Brush Industry Co., Ltd. Case for storing band-shaped personal ornament. 5,699,904, Cl. 206-296.000.
Ikeo, Joji; Ozaki, Masaharu; Tanaka, Tsuyoshi; Itonori, Katsuhiko; and Ishida, Yusuke, to Fuji Xerox Co., Ltd. Document processor. 5,701,500, Cl. 395-779.000.
Ikeya, Toshiaki: *See*—
Kawasaki, Naoki; Ohta, Mitsuhiko; and Ikeya, Toshiaki, 5,699,777, Cl. 123-580.000.
Ikoma, Munehisa; Akutsu, Norikatsu; Enokido, Masashi; Yoshii, Fumihiko; Kaiya, Hideo; and Tsuda, Shingo, to Matsushita Electric Industrial Co., Ltd. Nickel hydroxide active material powder and nickel positive electrode and alkali storage battery using them. 5,700,596, Cl. 429-206.000.
Ikumi, Yonezo: *See*—
Nagai, Toshitake; Ikumi, Yonezo; Kakinuma, Takahide; Sawada, Norio; Sato, Koji; and Watanabe, Masato, 5,699,675, Cl. 62-149.000.
Illinois Tool Works Inc.: *See*—
Gruca, Ned J.; and Ward, Michael E., 5,700,199, Cl. 470-19.000.
Imaeda, Takao: *See*—
Yamada, Yukio; Asami, Osamu; Sugiyama, Hidehiko; Idekoba, Chie; Hoshino, Fumihiko; Hirai, Masana; Kajino, Tsutomu; Imaeda, Takao; and Sarai, Kiyoko, 5,700,659, Cl. 435-69.100.
Imai, Akira: *See*—
Hasegawa, Norio; Terasawa, Tsuneo; Fukuda, Hiroshi; Hayano, Katsuya; Imai, Akira; Moniwa, Akemi; and Okazaki, Shinji, 5,700,601, Cl. 430-5.000.
Imaje: *See*—
Pagnon, Alain; and Rieuvernet, Pierre, 5,701,149, Cl. 347-89.000.
Imamura, Takashi: *See*—
Isobe, Kazuo; Azuma, Toshikazu; Nishikawa, Hideyo; and Imamura, Takashi, 5,700,772, Cl. 510-421.000.
Imamura, Tsuyoshi: *See*—
Sho, Katsuhiko; Shibata, Yasuhiro; Ishii, Keizou; Imamura, Tsuyoshi; and Takeuchi, Kunihiko, 5,700,862, Cl. 524-403.000.
Imano, Seiichi: *See*—
Akimoto, Kazuo; and Imano, Seiichi, 5,701,537, Cl. 396-463.000.
Imazu, Katsuhiro: *See*—
Kobayashi, Akira; Kurashima, Hideo; Sato, Harumi; Fujita, Satoshi; and Imazu, Katsuhiro, 5,700,529, Cl. 428-35.800.
Immersion Human Interface Corp.: *See*—
Rosenberg, Louis B.; and Jackson, Bernard G., 5,701,140, Cl. 345-156.000.
Imperial Chemical Industries PLC: *See*—
Morrison, Gary Wayne; Mann, Stephen; and Bennett, Christopher, 5,700,755, Cl. 503-227.000.
Pack, Barry, 5,700,756, Cl. 503-227.000.
Imra America, Inc.: *See*—
Fermann, Martin E., 5,701,319, Cl. 372-18.000.
Imwinkelried, René: *See*—
Altmann, Karl-Heinz; Imwinkelried, René; and Eschenmoser, Albert, 5,700,920, Cl. 536-221.000.
In-Control Solutions, Inc.: *See*—
Brown, Daniel R.; and Franz, Patrick J., 5,701,142, Cl. 345-168.000.
Inaba, Minoru. Lens adjustment device of stereo camera. 5,701,532, Cl. 396-326.000.
Inagaki, Hiroshi, to NGK Spark Plug Co., Ltd. Misfire detecting device for gasoline internal combustion engine. 5,701,077, Cl. 324-399.000.
Inami, Kazuyoshi: *See*—
Kasahara, Michiaki; Kawano, Hazime; Inami, Kazuyoshi; Muroi, Kohichi; and Iyama, Yoshitada, 5,701,107, Cl. 333-164.000.
Inamura, Susumu: *See*—
Miyaoh, Yoshio; and Inamura, Susumu, 5,700,016, Cl. 277-235.00B.
Inazuka, Masahiro: *See*—

Taguchi, Ichiro; and Inazuka, Masahiro, 5,701,534, Cl. 396-373.000.
Inco Limited: *See*—
Ettel, Victor Alexander; Ambrose, John; Cushnie, Kirt Kenneth; Bell, James Alexander E.; Paserin, Vladimir; and Kalal, Peter Joseph, 5,700,363, Cl. 205-271.000.
Incyte Pharmaceuticals, Inc.: *See*—
Braxton, Scott Michael; Diep, Dinh; and Stuart, Susan G., 5,700,924, Cl. 536-23.100.
Hawkins, Phillip R.; Wilde, Craig G.; and Seilhamer, Jeffrey J., 5,700,912, Cl. 530-350.000.
Indena SpA: *See*—
Bombardelli, Ezio; Mustich, Giuseppe; and Bertani, Marco, 5,700,468, Cl. 424-195.100.
Industrial Technology Research Institute: *See*—
Chang, De-An; and Lu, Jin-Yuh, 5,699,733, Cl. 101-129.000.
Shyr, Duen-Jyh; and Chen, Kuan-Chou, 5,699,892, Cl. 198-370.090.
Wang, Wen Chun; and Yang, Tzung-Zu, 5,700,175, Cl. 445-24.000.
Industrieanlagen-Betriebsgesellschaft mbH: *See*—
Gaus, Rainer; Zauner, Stefan; and Gesell, Günther, 5,699,624, Cl. 33-787.000.
Indyk, Richard F.: *See*—
Garant, John J.; and Indyk, Richard F., 5,700,549, Cl. 428-210.000.
Inference Corporation: *See*—
Lee, S. Daniel; Nguyen, Trung D.; and Czerwinski, Mary P., 5,701,399, Cl. 395-51.000.
Informix Software, Inc.: *See*—
Maloney, Christopher W.; Jackson, Brian D.; Mayfield, Kevin B.; Mills, Mark A.; and Tracy, Kent A., 5,701,453, Cl. 395-602.000.
Ingersoll-Rand Company: *See*—
Jones, William Leslie, 5,699,867, Cl. 175-296.000.
Inliner, U.S.A.: *See*—
Catallo, Giulio; Cihlar, Joe V.; and Lubbock, Maurice P. G., 5,699,838, Cl. 141-65.000.
Innovative Engineering Solutions, Inc.: *See*—
Shiban, Samir S., 5,699,826, Cl. 137-244.000.
Inokuchi, Iwane; Kamegaya, Shigeru; Oshidari, Toshikazu; and Sakamoto, Atsuhiro, to Nissan Motor Co., LTD. Bellows cam plate pump. 5,700,135, Cl. 417-269.000.
Inomata, Koichiro: *See*—
Saito, Yoshiaki; Okuno, Shiho; and Inomata, Koichiro, 5,700,588, Cl. 428-611.000.
Inoue, Atsushi; Kaku, Nobuyuki; and Sasaki, Takashi, to Hitachi, Ltd. Tape loading device in magnetic recording/playback apparatus that controls loading based on calculated reel inertia and tape position. 5,701,214, Cl. 360-71.000.
Inoue, Kenji: *See*—
Kashiwagi, Yoshinari; Umetani, Makoto; Kataoka, Hideaki; Inoue, Kenji; Nakamura, Shoji; and Morimoto, Satoru, 5,700,307, Cl. 65-374.100.
Inoue, Kouji: *See*—
Iwata, Masuo; Seki, Mika; Inoue, Kouji; Takahashi, Ryoji; Fukumura, Takashi; and Tanaka, Masaya, 5,700,575, Cl. 428-403.000.
Inoue, Masashi: *See*—
Kobayashi, Shinji; and Inoue, Masashi, 5,700,606, Cl. 430-5.000.
Inoue, Rikio; and Yamada, Sumito, to Fuji Photo Film Co., Ltd. Silver halide photographic material and method for processing the same. 5,700,630, Cl. 430-399.000.
Inoue, Shuji; and Ozawa, Kazuhisa, to Intel Corporation. Method of checking connected state between IC socket and printed wiring board. 5,699,612, Cl. 29-843.000.
Inoue, Shunsuke: *See*—
Yuzurihara, Hiroshi; Inoue, Shunsuke; Miyawaki, Mamoru; and Matsumoto, Shigeyuki, 5,700,719, Cl. 437-193.000.
Instance, David John. Labels and manufacture thereof. 5,700,537, Cl. 428-41.900.
Institut Franco Allemand de Recherches de Saint-Louis: *See*—
Bauer, François, 5,700,359, Cl. 204-164.000.
Intel Corporation: *See*—
Aucsmith, David W., 5,701,464, Cl. 395-610.000.
Bains, Kuljit S., 5,701,438, Cl. 395-497.010.
Brennan, James, Jr., 5,701,272, Cl. 365-230.060.
Dao, Giang T.; Tam, Nelson N.; Liu, Gang; and Farnsworth, Jeffrey N., 5,700,602, Cl. 430-5.000.
Fazio, Albert; Atwood, Gregory E.; Mi, James O.; and Ruby, Paul, 5,701,266, Cl. 365-185.030.
Feller, A. Daniel; and Cadien, Kenneth C., 5,700,383, Cl. 216-88.000.
Fenger, Russell J., 5,701,476, Cl. 395-652.000.
Gandhi, Jayanti L., 5,701,501, Cl. 395-800.000.
Glew, Andrew F.; Mennemeier, Larry M.; Peleg, Alexander D.; Bistry, David; Mittal, Millind; Dulong, Carole; Kowashi, Eiichi; Eitan, Benny; Lin, Derrick; and Vakkalagadda, Ramamohan R., 5,701,508, Cl. 395-800.000.
Hahn, Michael G., 5,701,447, Cl. 395-559.000.
Inoue, Shuji; and Ozawa, Kazuhisa, 5,699,612, Cl. 29-843.000.
Nedwek, David J.; Wilson, Howard; Nugent, Steve; and Dermer, Greg, 5,701,420, Cl. 395-284.000.
Nizar, P. K.; and Carson, David, 5,701,496, Cl. 395-739.000.
Ronen, Ronny, 5,701,442, Cl. 395-500.000.
Singh, Gurbir; Wang, Wen-Hann; Rhodehamel, Michael W.; Bauer, John M.; and Sarangdhar, Nitin V., 5,701,503, Cl. 395-800.000.
Timko, Mark A., 5,701,504, Cl. 395-800.000.
International Business Machines: *See*—
Shafe', Mathew Kayhan, 5,701,219, Cl. 360-105.000.
International Business Machines Corporation: *See*—
Abali, Bulent; and Mraz, Ronald, 5,701,446, Cl. 395-551.000.
Angelopoulos, Marie; Brusic, Vlasta A.; Graham, Teresita Ordonez; Purushothaman, Sampath; Saraf, Ravi F.; Shaw, Jane Margaret; Roldan, Judith Marie; and Viehbeck, Alfred, 5,700,398, Cl. 252-500.000.
Arndt, Richard Louis; Nicholson, James Otto; Silha, Edward John; Thurber, Steven Mark; and Youngs, Amy May, 5,701,495, Cl. 395-736.000.
Baker, Ernest Dysart; Dinwiddie, John Monroe, Jr.; Grice, Lonnie Edward; Joyce, James Maurice; Loffredo, John Mario; and Sanderson, Kenneth Russell, 5,701,502, Cl. 395-800.000.
Bates, Cary Lee; and Wyman, Blair, 5,701,489, Cl. 395-705.000.
Baugher, Mark John; Chang, Philip Yen-Tang; Morris, Gregory Lynn; and Stephens, Alan Palmer, 5,701,465, Cl. 395-610.000.
Benayoun, Alain; Fieschi, Jacques; Michel, Patrick; and LePennec, Jean-Francois, 5,701,468, Cl. 395-612.000.
Bhargava, Gautam; Goel, Piyush; and Iyer, Balakrishna Raghavendra, 5,701,454, Cl. 395-602.000.
Bhargava, Gautam; Goel, Piyush; and Iyer, Balakrishna Raghavendra, 5,701,455, Cl. 395-602.000.
Boaibes, Mounir Emile; and Kelle, Timothy Roger, 5,701,458, Cl. 395-609.000.
Chong, Ku Ho; Crockett, Charles Hayden, Jr.; Dunn, Stephen Alan, deceased; Hoebener, Karl Grant; and McMaster, Michael George, 5,699,613, Cl. 29-852.000.
Cornell, Julie Eileen; Diaz, Jorge Lazaro; Ho, Derek Wan Hok; Nguyen, Son Duc; and Tran, Cuong Huu, 5,701,408, Cl. 395-183.140.
Fontana, Robert Edward, Jr.; Gurney, Bruce Alvin; Lin, Tsann; Speriosu, Virgil Simon; Tsang, Ching Hwa; and Wilhoit, Dennis Richard, 5,701,223, Cl. 360-113.000.
Garant, John J.; and Indyk, Richard F., 5,700,549, Cl. 428-210.000.
Gilbertsen, Todd Andrew; and Knight, Stephen Arthur, 5,701,486, Cl. 395-704.000.
Gill, Hardayal Singh; and Gurney, Bruce A., 5,701,222, Cl. 360-113.000.
Goach, Kenneth Edmund, Jr.; Meyer, Gregory Phillip; and Sims, Jeffrey Scott, 5,701,498, Cl. 395-762.000.
Goth, Gary Franklin; Kemink, Randall Gail; Loparco, John Joseph; and Schmidt, Roger Ray, 5,699,853, Cl. 165-104.210.
Hedrick, Jeffrey Curtis; Hedrick, James Lupton; Liao, Yun-Hsin; Miller, Robert Dennis; and Shih, Da-Yuan, 5,700,844, Cl. 521-77.000.
Jacopi, Tom William; Payton, Brian Gerrit; and Siwek, Howard Alexander, 5,701,456, Cl. 395-604.000.
Jeremiah, Thomas Leo; and Blaner, Bartholomew, 5,701,430, Cl. 395-445.000.
Johnson, William J.; Keller, Robert Scott; Manthuruthil, George C.; and Williams, Marvin L., 5,701,510, Cl. 395-806.000.
Keener, Don Steven; and Moore, Gregory James, 5,701,514, Cl. 395-834.000.
Kroumbi, Mohamed Towfik; and Lee, James Hsi-Tang, 5,700,380, Cl. 216-22.000.
Legvold, Vernon J.; Lin, Julia; Michod, Carol S.; Ng, Chan Yiu; Sherman, William G., II; Steffan, Jeffrey R.; and Van Gundy, Steven R., 5,701,429, Cl. 395-441.000.
Rogers, Richard Michael; and Lagarde, Konrad Charles, 5,701,451, Cl. 395-600.000.
Sachdev, Krishna G.; Berger, Michael; and Chace, Mark S., 5,700,581, Cl. 428-447.000.
Steimle, Andre; Louis, Didier; and Paillet, Guy, 5,701,397, Cl. 395-27.000.
Wei, Yi-Hsiu, 5,701,415, Cl. 395-200.090.
Wu, Jin Jwang; Cavaliere, William Albert; Norum, James Patrick; and Schmitz, Stefan, 5,699,679, Cl. 62-617.000.
International Fuel Cells Corp.: *See*—
Reiser, Carl, 5,700,595, Cl. 429-13.000.
International Window Fashions, Inc.: *See*—
Jelic, Ralph, 5,699,845, Cl. 160-107.000.
Intichar, Lutz: *See*—
Emshoff, Horst-Werner; Intichar, Lutz; and Scheil, Hermann, 5,701,044, Cl. 310-54.000.
Inui, Kanichiro; and Oshima, Shunji, to Chisso Corporation. Barium/calcium catalyst and a process for producing the same. 5,700,754, Cl. 502-340.000.
Invernizzi, Giampiero: *See*—
Castelli, Francesco; and Invernizzi, Giampiero, 5,700,343, Cl. 156-295.000.
Iogen Corporation: *See*—
Foody, Brian; Nicholson, Colin; Tolan, Jeffrey; and White, Theresa, 5,700,686, Cl. 435-263.000.
Ionson, James A.: *See*—
Reiss, Wanda T.; and Ionson, James A., 5,701,185, Cl. 358-471.000.
Ip, Tony K.: *See*—
Tran, Duc; Wadsworth, Robert D.; Ip, Tony K.; and Russell, William C., 5,701,411, Cl. 395-200.100.
IPEC Precision, Inc.: *See*—
Vollaro, Joseph F., 5,700,297, Cl. 29-25.010.
IPL, Inc.: *See*—
Jacques, Michel; and Nolet, Roch, 5,699,926, Cl. 220-6.000.
Irvine Sensors Corporation: *See*—

Carson, John C.; DeCaro, Robert E.; Hsu, Ying; and Miyake, Michael K., 5,701,233, Cl. 361-735.000.
Irwin, Bruce C.; Moore, Edward E.; and Baum, Raymond F., to Hauck Manufacturing Company. Combination burner with primary and secondary fuel injection. 5,700,143, Cl. 431-284.000.
Isaji, Kazutoshi, to Shinwa Plant Kikou Co., Ltd.; Kawasaki Jukogyo Kabushiki Kaisha; Rasa Industries Ltd.; and Kyokoshi Co., Ltd. Method and system for reclaiming aggregate from concrete waste material. 5,699,969, Cl. 241-24.120.
Isakson, Peter C.; Anderson, Gary D.; and Gregory, Susan A. Treatment of inflammation and inflammation-related disorders with a combination of a cyclooxygenase-2 inhibitor and a leukotriene A, hydrolase inhibitor. 5,700,816, Cl. 514-326.000.
Isharani, Jayanti V.; Hung, Willaim M.; and Su, Kai C., to Ciba Specialty Chemicals Corporation. Method for the treatment of textile fibers. 5,700,394, Cl. 252-301.210.
Ishibashi, Eiji: *See—*
Kinjo, Morishige; and Ishibashi, Eiji, 5,701,437, Cl. 395-489.000.
Ishibashi, Koichiro: *See—*
Ikeda, Shuji; Meguro, Satoshi; Hashiba, Soichiro; Kuramoto, Isamu; Koike, Atsuyoshi; Sasaki, Katsuro; Ishibashi, Koichiro; Yamanaka, Toshiaki; Hashimoto, Naotaka; Moriwaki, Nobuyuki; Takahashi, Shigeru; Hiraishi, Atsushi; Kobayashi, Yutaka; and Yukutake, Seigou, 5,700,704, Cl. 437-52.000.
Ishida, Osamu, to Nippon Telegraph and Telephone Corporation. Tunable optical filter. 5,701,371, Cl. 385-17.000.
Ishida, Toshio: *See—*
Okita, Tsutomu; and Ishida, Toshio, 5,700,541, Cl. 428-65.400.
Ishida, Yuusuke: *See—*
Ikeo, Joji; Ozaki, Masaharu; Tanaka, Tsuyoshi; Itonori, Katsuhiko; and Ishida, Yuusuke, 5,701,500, Cl. 395-779.000.
Ishigaki, Yasuhiro: *See—*
Takechi, Kenjiro; Ishigaki, Yasuhiro; and Kojo, Hitomi, 5,700,210, Cl. 473-535.000.
Ishiguro, Minoru; Iwamoto, Jun'ichi; and Sato, Muneyoshi, to Fuji Photo Optical Co., Ltd. Camera. 5,701,520, Cl. 396-48.000.
Ishihara, Masamichi: *See—*
Oguchi, Satoshi; Ishihara, Masamichi; Ito, Kazuya; Murakami, Gen; Anjoh, Ichiro; Sakuta, Toshiyuki; Yamaguchi, Yasunori; Kasama, Yasuhiro; Udagawa, Tetsu; Miyamoto, Eiji; Matsuno, Youichi; Satoh, Hiroshi; and Nozoe, Atsusi, 5,701,031, Cl. 257-686.000.
Ishihara, Tatsumi: *See—*
Shiomitsu, Tohru; Manabe, Yasuhiko; Ogawa, Takashi; Takita, Yusaku; and Ishihara, Tatsumi, 5,700,361, Cl. 204-491.000.
Ishii, Hitoshi; and Ogino, Takao, to Henkel Corporation. Composition and process for imparting a bright blue color to zinc/aluminum alloy. 5,700,334, Cl. 148-273.000.
Ishii, Kazuo: *See—*
Kato, Eiichi; Nakazawa, Yusuke; and Ishii, Kazuo, 5,700,612, Cl. 430-49.000.
Ishii, Keizou: *See—*
Sho, Katsuhiko; Shibata, Yasuhiro; Ishii, Keizou; Imamura, Tsuyoshi; and Takeuchi, Kunihiko, 5,700,862, Cl. 524-403.000.
Ishii, Nobuo, to Tokyo Electron Limited. Stage system or device. 5,701,228, Cl. 361-234.000.
Ishii, Shinji: *See—*
Takashima, Youichi; Ishii, Shinji; and Yamanaka, Kiyoshi, 5,701,343, Cl. 380-4.000.
Ishikawa Gasket Co., Ltd.: *See—*
Miyaoh, Yoshio; and Inamura, Susumu, 5,700,016, Cl. 277-235.00B.
Ishikawa, Hiroki; Kenmochi, Yasuhiko; Bando, Takeshi; Hayashi, Masaho; and Shinogi, Norikazu, to Uni-Charm Corporation. Container for wetted tissues. 5,699,912, Cl. 206-494.000.
Ishikawa, Kiyoshi: *See—*
Sato, Mitsuru; Oomori, Katsumi; Ishikawa, Kiyoshi; Iguchi, Etsuko; and Kaneko, Fumitake, 5,700,625, Cl. 430-270.100.
Ishikawa, Makoto: *See—*
Hayashi, Bunya; and Ishikawa, Makoto, 5,699,884, Cl. 137-884.000.
Ishikawa, Osamu: *See—*
Iwanaga, Shin-ichiro; Shingae, Shigeru; Morita, Takasi; Ishikawa, Osamu; and Nojima, Norichika, 5,700,852, Cl. 523-201.000.
Ishikawa, Satoshi: *See—*
Kawamura, Akihisa; Ishikawa, Satoshi; and Iizuka, Hiroaki, 5,700,153, Cl. 439-164.000.
Ishikawa, Yuukou; Nishimoto, Noboru; Ootani, Michio; Tanibe, Tooru; Suzuki, Kazushige; and Kasahara, Kanesuke, to Nihon Cement Co. Ltd.; and Fuji Kasei Kogyo Kabushiki Kaisha. Heat-insulating panel serving as concrete form and method of manufacturing the same. 5,700,414, Cl. 264-247.000.
Ishimaru, Takenori: *See—*
Natsugari, Hideaki; Ikeda, Hitoshi; Ishimaru, Takenori; and Doi, Takayuki, 5,700,810, Cl. 514-307.000.
Ishimaru, Toshiaki: *See—*
Sakabe, Namiko; Ishimaru, Toshiaki; Kobayashi, Yoshiaki; and Suzuki, Takashi, 5,701,527, Cl. 396-277.000.
Ishisaka, Akira: *See—*
Ichikawa, Atsuko; Honda, Satoshi; Katoh, Takayuki; and Ishisaka, Akira, 5,701,377, Cl. 385-124.000.
Ishiwata, Kazuya; Watanabe, Yasuyuki; Nishida, Naoya; and Unno, Akira, to Canon Kabushiki Kaisha. Process for producing color filter. 5,701,544, Cl. 396-609.000.
Ishiwatari, Tahei: *See—*
Tanaka, Hiroshi; Fujita, Toru; and Ishiwatari, Tahei, 5,701,554, Cl. 399-69.000.
Ishiyama, Masaaki; Matuura, Takeaki; Mihoya, Takashi; Fujimatsu, Shinya; Utsugi, Masayoshi; and Iibuchi, Kouichi, to Toyo Ink Manufacturing Co., Ltd. Aqueous dispersion of an aqueous hydrazine-terminated polyurethane. 5,700,867, Cl. 524-539.000.
Ishizaki, Akira. Method and apparatus for controlling synchronous motor. 5,701,065, Cl. 318-701.000.
Ishizawa, Yasuhisa, to Canon Kabushiki Kaisha. Data transmission control apparatus for system with input/output units used in common by several CPU's. 5,701,512, Cl. 395-821.000.
Isis Innovation Limited: *See—*
Southern, Edwin, 5,700,637, Cl. 435-6.000.
Isis Pharmaceuticals, Inc.: *See—*
Cook, Phillip Dan, 5,700,922, Cl. 536-23.100.
Isobe, Kazuo; Azuma, Toshikazu; Nishikawa, Hideyo; and Imamura, Takashi, to Kao Corporation. Detergent composition comprising an amide-ether derivative mixture and an amphoteric surfactant. 5,700,772, Cl. 510-421.000.
Isoda, Yuzo: *See—*
Sekiya, Harukazu; Saito, Jun; Isoda, Yuzo; Uchida, Yasuhiro; Izumi, Makoto; and Kuwata, Takashi, 5,700,006, Cl. 271-241.000.
Isuzu Motors Limited: *See—*
Horiuchi, Shigeaki, 5,699,762, Cl. 123-90.220.
Shibata, Akinao, 5,700,049, Cl. 296-188.000.
Itagaki, Masaaki: *See—*
Toyoda, Shigeru; Yagi, Shuichi; and Itagaki, Masaaki, 5,700,405, Cl. 264-35.000.
Italfarmaco Sud S.p.A.: *See—*
De Ferra, Lorenzo; Massardo, Pietro; Piccolo, Oreste; and Servi, Stefano, 5,700,668, Cl. 435-106.000.
Ito, Kazuya: *See—*
Oguchi, Satoshi; Ishihara, Masamichi; Ito, Kazuya; Murakami, Gen; Anjoh, Ichiro; Sakuta, Toshiyuki; Yamaguchi, Yasunori; Kasama, Yasuhiro; Udagawa, Tetsu; Miyamoto, Eiji; Matsuno, Youichi; Satoh, Hiroshi; and Nozoe, Atsusi, 5,701,031, Cl. 257-686.000.
Ito, Shin-ichi; and Iwamatsu, Takayuki, to Kabushiki Kaisha Toshiba. Mask for light exposure and process for production of the same. 5,700,605, Cl. 430-5.000.
Ito, Takayuki: *See—*
Hasushita, Sachio; Yoneyama, Shuji; Maruyama, Koichi; and Ito, Takayuki, 5,701,205, Cl. 359-691.000.
Ito, Tetsuo: *See—*
Arita, Setsuo; Ito, Tetsuo; Ohga, Yukiharu; Ujita, Hiroshi; Murata, Fumio; Miyake, Masao; and Nishizawa, Yasuo, 5,701,394, Cl. 395-11.000.
Itoh, Hisanori: *See—*
Honda, Tsutomu; Itoh, Hisanori; Ueno, Takuya; Mori, Junji; Matsumoto, Hiroyuki; Hasegawa, Yasushi; and Kajita, Hideo, 5,701,518, Cl. 396-29.000.
Itoh, Kazuhiko: *See—*
Matsumoto, Toshio; Baba, Hiroshi; Itoh, Kazuhiko; and Ogura, Shiro, 5,701,406, Cl. 395-182.040.
Matsumoto, Toshio; Baba, Hiroshi; Itoh, Kazuhiko; and Ogura, Shiro, 5,701,407, Cl. 395-182.050.
Itoh, Kunio: *See—*
Aoki, Shunji; Ohba, Toshio; Hara, Yasuaki; and Itoh, Kunio, 5,700,899, Cl. 528-37.000.
Itoh, Masaki: *See—*
Iga, Katsumi; Yanai, Shigeo; Okabe, Keiichiro; and Itoh, Masaki, 5,700,481, Cl. 424-449.000.
Itoi, Takeshi: *See—*
Miura, Shinsuke; Itoi, Takeshi; and Yabushita, Shuichi, 5,701,257, Cl. 364-508.000.
Itonori, Katsuhiko: *See—*
Ikeo, Joji; Ozaki, Masaharu; Tanaka, Tsuyoshi; Itonori, Katsuhiko; and Ishida, Yuusuke, 5,701,500, Cl. 395-779.000.
Itou, Takeo: *See—*
Matsuda, Hidemi; Itou, Takeo; and Nakazawa, Tomoko, 5,700,609, Cl. 430-27.000.
Itou, Toshifumi; Shimazaki, Hiromitsu; Arita, Masaaki; and Horinouchi, Shougo, to Matsushita Electric Industrial Co., Ltd. Helical antenna with integral J-shaped impedance and mounting element and dual part cover. 5,701,129, Cl. 343-873.000.
ITT Automotive Europe GmbH: *See—*
Hehl, Thomas; and Prohaska, Hans, 5,700,104, Cl. 403-265.000.
Steffes, Helmut; Dinkel, Dieter; Vogel, Gunther; and Volz, Peter, 5,700,071, Cl. 303-119.200.
Wanke, Peter, 5,701,248, Cl. 364-426.010.
Ivanovich, Kazurov Boris: *See—*
Fedorovish, Ogurtsov Oleg; and Ivanovich, Kazurov Boris, 5,701,166, Cl. 349-38.000.
Iwakuni, Hideharu: *See—*
Kyogoku, Makoto; Iwakuni, Hideharu; and Takami, Akihide, 5,700,747, Cl. 502-66.000.
Iwama, Ryouichi: *See—*
Masuda, Syuzo; and Iwama, Ryouichi, 5,701,555, Cl. 399-69.000.
Iwamatsu, Takayuki: *See—*
Ito, Shin-ichi; and Iwamatsu, Takayuki, 5,700,605, Cl. 430-5.000.
Iwamoto, Jun'ichi: *See—*

Ishiguro, Minoru; Iwamoto, Jun'ichi; and Sato, Muneyoshi, 5,701,520, Cl. 396-48.000.
Iwanaga, Shin-ichiro; Shingae, Shigeru; Morita, Takasi; Ishikawa, Osamu; and Nojima, Norichika, to Japan Synthetic Rubber Co., Ltd. Paper coating composition. 5,700,852, Cl. 523-201.000.
Iwasaki, Hiroyuki, to Nikon Corporation. Photometry apparatus. 5,701,526, Cl. 396-234.000.
Iwasaki, Takeo, to Brother Kogyo Kabushiki Kaisha. Optical scanner. 5,701,191, Cl. 359-205.000.
Iwata, Masao; Seki, Mika; Inoue, Kouji; Takahashi, Ryoji; Fukumura, Tikashi; and Tanaka, Masaya, to Chisso Corporation. Water-insoluble ammonium polyphosphate particles. 5,700,575, Cl. 428-403.000.
Iyama, Yoshitada: *See—*
Kasahara, Michiaki; Kawano, Hazime; Inami, Kazuyoshi; Muroi, Kohichi; and Iyama, Yoshitada, 5,701,107, Cl. 333-164.000.
Iyer, Balakrishna Ragmavendra: *See—*
Bhargava, Gautam; Goel, Piyush; and Iyer, Balakrishna Ragmavendra, 5,701,454, Cl. 395-602.000.
Bhargava, Gautam; Goel, Piyush; and Iyer, Balakrishna Ragmavendra, 5,701,455, Cl. 395-602.000.
Izumi, Makoto: *See—*
Sekiya, Harukazu; Saito, Jun; Isoda, Yuzo; Uchida, Yasuhiro; Izumi, Makoto; and Kuwata, Takashi, 5,700,006, Cl. 271-241.000.
Izumi, Shougo: *See—*
Nakamichi, Kouichi; Izumi, Shougo; and Yasuura, Hiroyuki, 5,700,410, Cl. 264-122.000.
Izunome, Koji; Kawanishi, Souroku; Togawa, Shinji; Ikari, Atsushi; Sasaki, Hitoshi; and Kimura, Shigeyuki, to Research Development Corporation of Japan; Sumitomo Sitix Corporation; Toshiba Ceramics Co., Ltd.; Nippon Steel Corporation; Komatsu Electronic Metals Co., Ltd.; and Mitsubishi Materials Corporation. Growth of silicon single crystal having uniform impurity distribution along lengthwise or radial direction. 5,700,320, Cl. 117-19.000.
J. Mulcahy Enterprises Inc.: *See—*
Beitelman, Leonid; and Mulcahy, Joseph A., 5,699,850, Cl. 164-468.000.
Jachetta, John J.: *See—*
Van Heertum, John C.; Kleschick, William A.; Arndt, Kim E.; Costales, Mark J.; Ehr, Robert J.; Bradley, Kimberly Brubaker; Reifschneider, Walter; Benkő , Zoltan; Ash, Mary Lynne; and Jachetta, John J., 5,700,940, Cl. 546-119.000.
Jackson, Bernard G.: *See—*
Rosenberg, Louis B.; and Jackson, Bernard G., 5,701,140, Cl. 345-156.000.
Jackson, Brian D.: *See—*
Maloney, Christopher W.; Jackson, Brian D.; Mayfield, Kevin B.; Mills, Mark A.; and Tracy, Kent A., 5,701,453, Cl. 395-602.000.
Jackson, Byron M., to Minnesota Mining & Manufacturing Company. Loop fastening material. 5,699,593, Cl. 24-445.000.
Jackson, Frank J., Jr.: *See—*
Wieloch, Francis J.; LaManna, Gina M.; Jackson, Frank J., Jr.; Smallman, Gary W.; Kemp, Kenneth A.; Speakman, Edward J.; Grabowski, Edward F.; Street, Terry L.; Wisniewski, Carl A.; and Czerniawski, John A., 5,699,584, Cl. 15-256.520.
Jacob, Heinz-Jürgen, to U.S. Philips Corporation. Rotary-anode x-ray tube. 5,701,336, Cl. 378-132.000.
Jacobs, Jack H.; Thomas, Matthew M.; Grosskrueger, Duane D.; Carpenter, Bernie F.; and Perry, Alan R., to McDonnell Douglas Corporation; and Lockheed Martin Corporation. Fabrication method for composite structure adapted for controlled structural deformation. 5,700,337, Cl. 156-64.000.
Jacobs, Rob Lee: *See—*
Gillberg-LaForce, Gunilla Elsa; Hetzler, Kevin George; and Jacobs, Rob Lee, 5,700,531, Cl. 428-36.100.
Jacobson, Craig Robert: *See—*
Lampes, Elias Harry; Jacobson, Craig Robert; and Manning, Robert Francis, 5,700,132, Cl. 416-97.00R.
Jacobson, Lynn M.: *See—*
Handelsman, Jo; Stabb, Eric V.; Jacobson, Lynn M.; Goodman, Robert M.; Johnson, David W.; and Smith, Kevin P., 5,700,462, Cl. 424-93.460.
Jacopi, Tom William; Payton, Brian Gerrit; and Siwek, Howard Alexander, to International Business Machines Corporation. System and method for interactively formulating database queries using graphical representations. 5,701,456, Cl. 395-604.000.
Jacques, Michel; and Nolet, Roch, to IPL, Inc. Five-piece container with stabilizer tablet. 5,699,926, Cl. 220-6.000.
Jaggar, David Vivian, to Advanced Risc Machines Limited. Exception handling method and apparatus in data processing systems. 5,701,493, Cl. 395-734.000.
Jahrsetz, Achim; Kleefeldt, Frank; Ostermann, Wilfried; and Welskopf, Fred, to Kiekert AG. Central lock system for an automotive vehicle with satellite processors at respective locks. 5,699,685, Cl. 70-264.000.
Jakubicki, Gary; McCandish, Elizabeth; Zyzyck, Len; and Drapier, Julien, to Colgate-Palmolive Co. Light duty liquid cleaning compositions. 5,700,773, Cl. 510-426.000.
Jambhekar, Shrirang Nilkanth: *See—*
Harris, Daryl Robert; Jambhekar, Shrirang Nilkanth; Reber, William Louis; Stuckman, Bruce Edward; and Perttunen, Cary Drake, 5,701,258, Cl. 364-514.00R.
James, David C.; Clymer, John R.; Corey, Philip D.; and Nili, Nafise, to Boeing North American, Inc. Combined discrete-event and continuous model simulation and analysis tool. 5,701,439, Cl. 395-500.000.
James, Lisa R.: *See—*
Capson, Brian; Cherry, Wes; Devaan, Jon; Duncan, Chris; Fowles, Raymond E.; Graham, Christopher E.; James, Lisa R.; and McGuire, Timothy W., Jr., 5,701,499, Cl. 395-764.000.
James, Miro. Gyrocycle. 5,700,228, Cl. 482-62.000.
Jameson, Lee Kirby: *See—*
Cohen, Bernard; Jameson, Lee Kirby; Gipson, Lamar Heath; and Fenn, Judith Katherine, 5,700,553, Cl. 428-220.000.
Jamieson, Paul E., to Westinghouse Air Brake Company. Penalty brake scheme for straight air pipe brake control equipment. 5,700,065, Cl. 303-19.000.
Jamieson, Paul E., to Westinghouse Air Brake Company. Penalty brake design for straight air pipe brake control equipment. 5,700,066, Cl. 303-19.000.
Jamiolkowski, Dennis D.; and Bezwada, Rao S., to Ethicon, Inc. Hydrogels of absorbable polyoxaesters containing amines or amido groups. 5,700,583, Cl. 428-482.000.
Jan, William Young: *See—*
Cunningham, John Edward; Jan, William Young; Knox, Wayne Harvey; and Tsuda, Sergio, 5,701,327, Cl. 372-99.000.
Jancke, Gavin: *See—*
Kiernan, Casey L.; and Jancke, Gavin, 5,701,137, Cl. 345-119.000.
Jang, Deok hwan, to Samsung Electronics Co., Ltd. Ultrasonic vibration welder. 5,699,950, Cl. 228-1.100.
Jang, Sei-Hum: *See—*
Kahr, Bart; Jang, Sei-Hum; and Elliott, Daniel S., 5,701,323, Cl. 372-54.000.
Jang, Syun-Ming: *See—*
Yu, Chen-Hua; and Jang, Syun-Ming, 5,700,737, Cl. 438-636.000.
Janisiewicz, Stanley W.: *See—*
Kolcun, Joseph F.; Janisiewicz, Stanley W.; and Gierkes, Koenraad A., 5,699,934, Cl. 222-1.000.
Janssen Pharmaceutica, N.V.: *See—*
François, Marc Karel Jozef; and Agemans, Christine Frieda Augusta, 5,700,814, Cl. 514-321.000.
Japan as represented by Director General of Agency of Industrial Science and Technology: *See—*
Taguchi, Yoichi; Oishi, Akihiro; Shibuya, Isao; and Tsuchiya, Tohru, 5,700,931, Cl. 540-203.000.
Japan Atomic Energy Research Institute: *See—*
Sugiyama, Akira; Nakayama, Tsuyoshi; Kato, Masaaki; Maruyama, Yoichiro; and Arisawa, Takashi, 5,701,320, Cl. 372-32.000.
Japan Synthetic Rubber Co., Ltd.: *See—*
Iwanaga, Shin-ichiro; Shingae, Shigeru; Morita, Takasi; Ishikawa, Osamu; and Nojima, Norichika, 5,700,852, Cl. 523-201.000.
Nishikawa, Michinori; Miyamoto, Tsuyoshi; Kawamura, Shigeo; Yasuda, Kyouyu; Mutsuga, Yasuaki; and Matsuki, Yasuo, 5,700,860, Cl. 524-317.000.
Japan Vac's Metal Co., Ltd.: *See—*
Morita, Shinsaku; and Sato, Yoshiyuki, 5,700,014, Cl. 277-167.500.
Japanese Foundation for Cancer Research: *See—*
Taniguchi, Tadatsugu; Muramatsu, Masami; Sugano, Haruo; Matsui, Hiroshi; Kashima, Nobukazu; and Hamuro, Junji, 5,700,913, Cl. 530-351.000.
Jarboe, Victor R.: *See—*
Conatser, Roger; and Jarboe, Victor R., 5,699,967, Cl. 239-526.000.
Jaszewski, Wayne M.: *See—*
Phillips, George E.; Jaszewski, Wayne M.; Griffiths, John M.; and Gessner, Keith W., 5,699,763, Cl. 123-184.210.
Jatco Corporation: *See—*
Mizuta, Muneo, 5,700,221, Cl. 475-146.000.
JDS Fitel Inc.: *See—*
Duck, Gary S.; Cheng, Yihao; and Abe, Koichi, 5,701,375, Cl. 385-74.000.
Jeanvoine, Pierre; Lismonde, Michel; and Vieslet, Jacques, to Saint-Gobain Vitrage. Glass compositions intended for the production of panes. 5,700,579, Cl. 428-437.000.
Jeffcoat, Roger: *See—*
Chiu, Chung-Wai; Jeffcoat, Roger; Henley, Matthew; and Peek, Leroy, 5,700,917, Cl. 536-18.700.
Jeffers, Frederick John, to Eastman Kodak Company. Magnetic medium capable of supporting both longitudinal and perpendicular recording, and method of making same. 5,700,594, Cl. 428-694.0BA.
Jefferson Smurfit Corporation: *See—*
Kohler, Karl, 5,699,958, Cl. 229-120.370.
Jelic, Ralph, to International Window Fashions, Inc. Magnetic tilt mechanism for Venetian blinds. 5,699,845, Cl. 160-107.000.
Jenkins, David Howell. Needle point protector. 5,700,249, Cl. 604-263.000.
Jenkins, Peter D.; and Wettengel, Paul F., to British Telecommunications public limited company. Fibre coiling. 5,699,974, Cl. 242-361.400.
Jenkinson, Timothy: *See—*
Lowe, Martin; and Jenkinson, Timothy, 5,700,305, Cl. 65-60.100.
Jenner, Bert: *See—*
Woerner, Bernhard; Haug, Kurt; Fabry, Thomas; Kusserow, Peter; and Jenner, Bert, 5,700,079, Cl. 362-80.000.
Jennmar Corporation: *See—*
Castle, Brian R.; Scott, James J.; and Oldsen, John G., 5,699,572, Cl. 7-138.000.

Jensen, Gert; and Shackle, Dale, to Valence Technology, Inc. Electrolyte coating system for porous electrodes. 5,700,300, Cl. 29-623.500.
Jensen, Steven D.: *See—*
Fischer, Dan E.; and Jensen, Steven D., 5,700,188, Cl. 433-217.100.
Jeon, Byung Chun; Do, Mi Sun; Park, Chun Kwan; Oh, Chang Whan; and Kim, Young Sun, to Electronics and Telecommunications Research Institute; and Korea Telecommunication Authority. Connectionless server for an asynchronous transfer mode network. 5,701,300, Cl. 370-392.000.
Jeon, Jun-Young; and Park, Pil-Soon, to Samsung Electronics Co., Ltd. Integrated circuit output driver systems including multiple power and ground lines. 5,701,072, Cl. 323-312.000.
Jeong, Bong-uk: *See—*
Kim, Chang-seob; Son, Seok-bong; Kim, Sang-hyun; and Jeong, Bong-uk, 5,701,052, Cl. 313-346.00R.
Jeremiah, Thomas Leo; and Blaner, Bartholomew, to International Business Machines Corporation. Cross-cache-line compounding algorithm for scism processors. 5,701,430, Cl. 395-445.000.
Ji, Jeong-Beom; and Min, Yong-Ki, to Daewoo Electronics Co., Ltd. Thin film actuated mirror array and method of manufacturing the same. 5,701,192, Cl. 359-224.000.
Jinks, Andrew: *See—*
Stein, Andrew M.; and Jinks, Andrew, 5,699,729, Cl. 99-323.900.
Jinno, Yukihiro: *See—*
Fujii, Masumi; Suda, Taiichiro; Hotta, Yoshitsugu; Kitamura, Koichi; Jinno, Yukihiro; Mimura, Tomio; Shimojo, Shigeru; Iijima, Masaki; and Mitsuoka, Shigeaki, 5,700,437, Cl. 423-220.000.
Joe, Yeo-Uk, to Daewoo Electronics, Co., Ltd. Apparatus for testing components to be incorporated in a video cassette recorder. 5,700,960, Cl. 73-865.900.
John Crane Inc.: *See—*
Baty, John David, 5,700,013, Cl. 277-85.000.
John, Erwin Roy, to New York University. EEG operative and post-operative patient monitoring system and method. 5,699,808, Cl. 128-731.000.
Johns Hopkins University, The: *See—*
Atalar, Ergin; Bottomley, Paul A.; and Zerhouni, Elias A., 5,699,801, Cl. 128-653.200.
Bishai, William R.; Young, Douglas B.; Zhang, Ying; and DeMaio, James, 5,700,925, Cl. 536-23.100.
Johnson & Johnson Medical, Inc.: *See—*
Rosenthal, Arthur L.; Light, Nicholas D.; and Haynes, Carla A., 5,700,476, Cl. 424-426.000.
Rosenthal, Arthur L.; Light, Nicholas D.; and Watt, Paul W., 5,700,477, Cl. 424-426.000.
Johnson, Daniel J.: *See—*
Johnson, Paul S.; and Johnson, Daniel J., 5,699,941, Cl. 222-486.000.
Johnson, David; and Ashman, James, to YKK Corporation. Method of manufacturing a tape having a succession of surface-type fastener pieces. 5,700,340, Cl. 156-152.000.
Johnson, David Randal: *See—*
Alferness, Merwin H.; Criswell, Peter Bradley; Johnson, David Randal; and McBreen, James R., 5,701,316, Cl. 371-53.000.
Johnson, David W.: *See—*
Handelsman, Jo; Stabb, Eric V.; Jacobson, Lynn M.; Goodman, Robert M.; Johnson, David W.; and Smith, Kevin P., 5,700,462, Cl. 424-93.460.
Johnson, Glenn D.: *See—*
Hagen, Donald F.; Hart, Kenneth M.; and Johnson, Glenn D., 5,700,375, Cl. 210-651.000.
Johnson, Glenn L.: *See—*
Hakala, Kevin E.; Kunkel, Joseph D.; and Johnson, Glenn L., 5,699,677, Cl. 62-291.000.
Johnson, Hugh Griffith, to Fisher & Paykel Limited. Electric fan motor. 5,701,047, Cl. 310-254.000.
Johnson, Kevin M.: *See—*
Burchard, Thomas H.; Hunter, Gregory; Johnson, Kevin M.; Karg, Jeffery; and Bertrand, John E., 5,699,832, Cl. 137-614.200.
Johnson, Lonnie G.; and Applewhite, John T., to Johnson Research & Development Company, Inc. Rapid fire compressed air gun. 5,699,781, Cl. 124-69.000.
Johnson, Marie M. Embroidered applique fastening system clothing articles. 5,699,557, Cl. 2-239.000.
Johnson, Oscar R., III; and Owens, Marschall S. Method of personal verification for an in-resident system for administrating course material. 5,700,149, Cl. 434-322.000.
Johnson, Paul S.; and Johnson, Daniel J. Method and apparatus for improved regulation of flow of particulate matter. 5,699,941, Cl. 222-486.000.
Johnson, Randall Eugene; and Sparks, Marcus N., to Synthetic Industries, Inc. Apparatus for applying synthetic roving materials and method for controlling the build up of static electricity. 5,700,111, Cl. 405-258.000.
Johnson Research & Development Company, Inc.: *See—*
Johnson, Lonnie G.; and Applewhite, John T., 5,699,781, Cl. 124-69.000.
Johnson, Roy P.; and Wilkinson, Donald L., to SEH America, Inc. Flowhood work station. 5,700,190, Cl. 454-57.000.
Johnson, William J.; Keller, Robert Scott; Manthuruthil, George C.; and Williams, Marvin L., to International Business Machines Corporation. Method and system for efficient designation and retrieval of particular segments within a multimedia presentation utilizing a data processing system. 5,701,510, Cl. 395-806.000.
Johnston, James David: *See—*
Dorward, Sean Matthew; and Johnston, James David, 5,701,389, Cl. 395-2.120.
Johnston, Richard S.: *See—*
Kollin, Joel S.; Johnston, Richard S.; and Melville, Charles D., 5,701,132, Cl. 345-8.000.
Jones, Christopher David: *See—*
Griffiths, Richard F.; and Jones, Christopher David, 5,701,009, Cl. 250-356.100.
Jones, Frank N.; Du, Cong; Teng, Ganghui; Dimian, Adel F.; and Wang, Daozhang, to North Dakota State University. Compounds with liquid crystalline properties and coating binders based thereon. 5,700,882, Cl. 525-440.000.
Jones, James M.: *See—*
Jones, James S.; and Jones, James M., 5,700,402, Cl. 261-35.000.
Jones, James R., to Brunswick Corporation. Inlet adapter for a personal watercraft. 5,700,169, Cl. 440-46.000.
Jones, James S.; and Jones, James M. Crankcase fuel injection system for two-cycle internal combustion engines. 5,700,402, Cl. 261-35.000.
Jones, Thaddeus M. Apparatus for supporting and locating buried cable and similar devices. 5,700,385, Cl. 249-91.000.
Jones, William Leslie, to Ingersoll-Rand Company. Bit retention device for a bit and chuck assembly of a down-the-hole, percussive drill. 5,699,867, Cl. 175-296.000.
Jones, William P.: *See—*
Brandli, Stephen A.; and Jones, William P., 5,701,469, Cl. 395-613.000.
Jonsson, Tomas: *See—*
Björklund, Per-Erik; Jonsson, Tomas; and Juhlin, Lars-Erik, 5,701,239, Cl. 363-35.000.
Joos, Franz, to Asea Brown Boveri AG. Gas-operated premixing burner for gas turbine. 5,699,667, Cl. 60-737.000.
Jørgensen, Tony; and Pedersen, Anders Hjelholt, to Novo Nordisk A/S. Purification of Factor VII. 5,700,914, Cl. 530-412.000.
Joseph, Gary Curtis; Berg, Charles John, Jr.; and Pollard, Ricky Alan, to Procter & Gamble Company, The. Hygienic package with a reclosable flap. 5,699,911, Cl. 206-494.000.
Jost, Mark E.; Hansen, David J.; and McDonald, Steven M., to Micron Technology, Inc. Semiconductor wafer, wafer alignment patterns and method of forming wafer alignment patterns. 5,700,732, Cl. 438-401.000.
Joubert, Daniel: *See—*
Boittiaux, Patrick; Couvret, Virginie; and Joubert, Daniel, 5,700,294, Cl. 8-137.000.
Joy, William N.; and van Hoff, Arthur A., to Sun Microsystems, Inc. System and method for space efficient object locking using a data subarray and pointers. 5,701,470, Cl. 395-614.000.
Joyce, James Maurice: *See—*
Baker, Ernest Dysart; Dinwiddie, John Monroe, Jr.; Grice, Lonnie Edward; Joyce, James Maurice; Loffredo, John Mario; and Sanderson, Kenneth Russell, 5,701,502, Cl. 395-800.000.
Juengling, Werner, to Micron Technology, Inc. Self-aligned isolated polysilicon plugged contacts. 5,700,706, Cl. 437-52.000.
Juhlin, Lars-Erik: *See—*
Björklund, Per-Erik; Jonsson, Tomas; and Juhlin, Lars-Erik, 5,701,239, Cl. 363-35.000.
Jung, Birgit: *See—*
Schnorrenberg, Gerd; Esser, Franz; Dollinger, Horst; Jung, Birgit; Speck, Georg; and Burger, Erich, 5,700,827, Cl. 514-414.000.
Jung, Günther: *See—*
Metzger, Jörg; Wiesmüller, Karl-Heinz; and Jung, Günther, 5,700,910, Cl. 530-338.000.
Jung, Hae-Mook, to Daewoo Electronics Co., Ltd. Apparatus for encoding an image signal having a still object. 5,701,368, Cl. 382-239.000.
Jung, Rudiger; and Bär, Harald, to Flutec Fluidtechnische Gerate GmbH. Adjusting switching device. 5,699,714, Cl. 91-439.000.
Junge, Bodo: *See—*
Mittendorf, Joachim; Fey, Peter; Junge, Bodo; Kaulen, Johannes; Laak, Kai van; Meier, Heinrich; and Schohe-Loop, Rudolf, 5,700,948, Cl. 548-531.000.
Jurewicz, Romuald Martin; and Viegas, Herman H., to Thermo King Corporation. Control system for a cryogenic refrigeration system. 5,699,670, Cl. 62-50.300.
Jurras, Mark I., III, to Torrington Company, The. Lined bearing with wear sensor. 5,701,119, Cl. 340-682.000.
K2, Inc.: *See—*
Fahmy, Mohamed A., 5,700,570, Cl. 428-342.000.
Kabbinavar, Fairooz F.: *See—*
Hirth, Klaus Peter; Schwartz, Donna Pruess; Mann, Elaina; Shawver, Laura Kay; Keri, Gyorgi; Szekely, Istvan; Bajor, Tamas; Haimichael, Janis; Orfi, Laszlo; Levitzki, Alex; Gazit, Aviv; Ullrich, Axel; Lammers, Reiner; Kabbinavar, Fairooz F.; Slamon, Dennis; and Tang, Peng Cho, 5,700,822, Cl. 514-380.000.
Kabushiki Kaisha Ace Denken: *See—*
Takemoto, Takatoshi; and Kawashima, Kazunari, 5,700,997, Cl. 235-[illegible].
Kabushiki Kaisha Dymosha: *See—*
Kubo, Setsuo, 5,699,783, Cl. 125-21.000.
Kabushiki Kaisha Kenwood: *See—*
Matsuo, Shinta; and Sakamoto, Yoshio, 5,701,357, Cl. 381-199.000.
Kabushiki Kaisha Kobe Seiko Sho: *See—*
Fernyhough, Alan; and Fryars, Michael, 5,700,417, Cl. 264-477.000.
Mitsuhashi, Kenichiro, 5,699,855, Cl. 165-133.000.
Kabushiki Kaisha Komatsu Seisakusho: *See—*

Moriya, Yukio; Koyanagi, Satoru; Fujimura, Tetsuya; Nagahama, Masayuki; Yamazaki, Kazuyuki; and Hishiyama, Toru, 5,699,873, Cl. 180-402.000.
Yoshimura, Yukio, 5,701,251, Cl. 364-474.240.
Kabushiki Kaisha Saginomiya Seisakusho: *See—*
Sagiyama, Tatsuya; Baba, Fumihiko; Saito, Kaname; Matsushima, Takashi; and Iizuka, Hitoshi, 5,700,951, Cl. 73-11.080.
Kabushiki Kaisha TEC: *See—*
Fukuda, Yoshiyuki; Kojima, Katsura; and Sugiyama, Tadashi, 5,701,563, Cl. 399-284.000.
Ootaka, Yoshimitsu; Kato, Tomoyuki; and Sato, Katsutoshi, 5,701,559, Cl. 399-149.000.
Suzuki, Masashi, 5,701,000, Cl. 235-462.000.
Kabushiki Kaisha Tokai-Rika-Denki-Seisakusho: *See—*
Hori, Seiji, 5,699,976, Cl. 242-374.000.
Kabushiki Kaisha Toshiba: *See—*
Burroughes, Jeremy H.; and Arnone, Donald D., 5,701,016, Cl. 257-24.000.
Fujii, Toshikazu, 5,701,103, Cl. 330-290.000.
Hashimoto, Hidetsuna, 5,700,720, Cl. 437-195.000.
Ito, Shin-ichi; and Iwamatsu, Takayuki, 5,700,605, Cl. 430-5.000.
Kanekō, Hiroyuki, 5,701,513, Cl. 395-826.000.
Kanno, Hiroki, 5,701,364, Cl. 382-176.000.
Kinjo, Morishige; and Ishibashi, Eiji, 5,701,437, Cl. 395-489.000.
Matsuda, Hidemi; Itou, Takeo; and Nakazawa, Tomoko, 5,700,609, Cl. 430-27.000.
Ohsawa, Takashi, 5,701,095, Cl. 327-410.000.
Patel, Nalin K.; and Burroughes, Jeremy H., 5,701,017, Cl. 257-27.000.
Saito, Yoshiaki; Okuno, Shiho; and Inomata, Koichiro, 5,700,588, Cl. 428-611.000.
Suzuki, Seigo, 5,701,093, Cl. 326-98.000.
Kabushiki Kaisha Toyoda Jidoshokki Seisakusho: *See—*
Hoshino, Tatsuyuki; Ban, Takashi; Ban, Takahisa; and Hirose, Tatsuya, 5,699,673, Cl. 62-93.000.
Ota, Masaki; Okadome, Youichi; Kobayashi, Hisakazu; and Hamasaki, Masaru, 5,699,716, Cl. 92-12.200.
Kabushiki Kaisha Toyota Chuo Kenkusho: *See—*
Yamada, Yukio; Asami, Osamu; Sugiyama, Hidehiko; Idekoba, Chie; Hoshino, Fumihiko; Hirai, Masana; Kajino, Tsutomu; Imaeda, Takao; and Sarai, Kiyoko, 5,700,659, Cl. 435-69.100.
Kaden, Dietmar: *See—*
Tönnigs, Bodo; and Kaden, Dietmar, 5,700,128, Cl. 414-789.100.
Kaehr, Mark A., to R & K Incinerator, Inc. Animal carcass incinerator. 5,699,745, Cl. 110-194.000.
Kaerts, Eric: *See—*
Horemans, Luc; and Kaerts, Eric, 5,701,150, Cl. 347-212.000.
Kaga, Toru: *See—*
Meguro, Satoshi; Uchibori, Kiyofumi; Suzuki, Norio; Motoyoshi, Makoto; Koike, Atsuyoshi; Yamanaka, Toshiaki; Sakai, Yoshio; Kaga, Toru; Hashimoto, Naotaka; Hashimoto, Takashi; Honjou, Shigeru; and Minato, Osamu, 5,700,705, Cl. 437-52.000.
Kageyama, Hiroshi: *See—*
Yoshiuchi, Katsuhiro; Kageyama, Hiroshi; and Nishi, Yoko, 5,701,573, Cl. 399-384.000.
Kageyama, Shuhei; Kageyama, Toshihiko; Nakazato, Youichi; and Mitsuya, Yoshihide, to Kotobuki & Co., Ltd. Writing tool. 5,700,101, Cl. 401-52.000.
Kageyama, Toshihiko: *See—*
Kageyama, Shuhei; Kageyama, Toshihiko; Nakazato, Youichi; and Mitsuya, Yoshihide, 5,700,101, Cl. 401-52.000.
Kahahane, Jean: *See—*
Malladi, Deviprasad; Hanson, Lee Frederick; and Kahahane, Jean, 5,701,085, Cl. 324-754.000.
Kahlbau, Lutz, to Siemens Aktiengesellschaft. Electromechanical component, in particular a relay, having a sealed casing. 5,699,899, Cl. 200-302.100.
Kahne, Daniel E.; Goodnow, Robert A., Jr.; Taylor, Carol M.; and Yan, Lin, to Trustees of Princeton University. Solution and solid-phase formation of glycosidic linkages. 5,700,916, Cl. 536-1.110.
Kahr, Bart; Jang, Sei-Hum; and Elliott, Daniel S., to Purdue Research Foundation. Dye lasers and organic inclusions for same. 5,701,323, Cl. 372-54.000.
Kaida, Hiroaki, to Murata Manufacturing Co., Ltd. Chip-type piezoelectric resonance component. 5,701,048, Cl. 310-321.000.
Kaido, Yosinori: *See—*
Kaji, Masanori; Ono, Masayosi; Takabatake, Yosinobu; Kaido, Yosinori; Haga, Takahiro; and Hikosaka, Masaru, 5,701,067, Cl. 320-2.000.
Kaijo Corporation: *See—*
Miyoshi, Hideaki, 5,699,951, Cl. 228-4.500.
Kaiya, Hideo: *See—*
Ikoma, Munehisa; Akutsu, Norikatsu; Enokido, Masashi; Yoshii, Fumihiko; Kaiya, Hideo; and Tsuda, Shingo, 5,700,596, Cl. 429-206.000.
Kaji, Masanori; Ono, Masayosi; Takabatake, Yosinobu; Kaido, Yosinori; Haga, Takahiro; and Hikosaka, Masaru, to Sanyo Electric Co., Ltd. Battery charger and solar cells for battery charging. 5,701,067, Cl. 320-2.000.
Kajikawa, Tsuneo: *See—*
Miyakawa, Futoshi; Kawamata, Masahiro; Hamada, Yoshiaki; Asao, Kosuke; and Kajikawa, Tsuneo, 5,699,872, Cl. 180-291.000.
Kajino, Tsutomu: *See—*
Yamada, Yukio; Asami, Osamu; Sugiyama, Hidehiko; Idekoba, Chie; Hoshino, Fumihiko; Hirai, Masana; Kajino, Tsutomu; Imaeda, Takao; and Sarai, Kiyoko, 5,700,659, Cl. 435-69.100.
Kajioka, Hiroshi: *See—*
Kumagai, Tatsuya; Kajioka, Hiroshi; Kobayashi, Osamu; Akiyama, Munehiro; Oho, Shigeru; and Sonobe, Hisao, 5,701,177, Cl. 356-350.000.
Kajita, Hideo: *See—*
Honda, Tsutomu; Itoh, Hisanori; Ueno, Takuya; Mori, Junji; Matsumoto, Hiroyuki; Hasegawa, Yasushi; and Kajita, Hideo, 5,701,518, Cl. 396-29.000.
Kakinuma, Takahide: *See—*
Nagai, Toshitake; Ikumi, Yonezo; Kakinuma, Takahide; Sawada, Norio; Sato, Koji; and Watanabe, Masato, 5,699,675, Cl. 62-149.000.
Kaku, Nobuyuki: *See—*
Inoue, Atsushi; Kaku, Nobuyuki; and Sasaki, Takashi, 5,701,214, Cl. 360-71.000.
Kaku, Rumiko: *See—*
Shinojima, Satoshi; Suetsugu, Masaru; Morikawa, Yoshihiro; Shibata, Yuki; and Kaku, Rumiko, 5,700,784, Cl. 514-24.000.
Kakumaru, Hajime, to Hitachi Chemical Company, Ltd. Developing process. 5,700,629, Cl. 430-325.000.
Kalal, Peter Joseph: *See—*
Ettel, Victor Alexander; Ambrose, John; Cushnie, Kirt Kenneth; Bell, James Alexander E.; Paserin, Vladimir; and Kalal, Peter Joseph, 5,700,363, Cl. 205-271.000.
Kallin, Harald; and Fallgren, Anna, to Telefonaktiebolaget LM Ericsson. Mobile assisted handoff. 5,701,585, Cl. 455-33.200.
Kallin, Harald; and Bodin, Roland, to Telefonaktiebolaget LM Ericsson. Method and system for desynchronizing overhead messages in a radiocommunication system. 5,701,592, Cl. 455-69.000.
Kallistov, Anatoly Anatolievich: *See—*
Gerasimov, Jury Vasilievich; Grinberg, Jury Moiseevich; Djuzhev, Georgy Andreevich; Kallistov, Anatoly Anatolievich; Kurilenko, Vladimir Iliich; and Rakhovsky, Vadim Izrailovich, 5,701,057, Cl. 315-111.210.
Kalogroulis, Alexander Joseph: *See—*
Sanders, Mark Andrew; and Kalogroulis, Alexander Joseph, 5,699,567, Cl. 5-614.000.
Kamata, Shigeto: *See—*
Akutsu, Kotaro; Osanai, Eiji; and Kamata, Shigeto, 5,701,041, Cl. 310-12.000.
Kamegaya, Shigeru: *See—*
Inokuchi, Iwane; Kamegaya, Shigeru; Oshidari, Toshikazu; and Sakamoto, Atsuhiro, 5,700,135, Cl. 417-269.000.
Kameoka, Norimasa: *See—*
Furugen, Munekatsu; Hamazaki, Shotaro; Kameoka, Norimasa; and Okamoto, Atsuhumi, 5,699,690, Cl. 72-69.000.
Kamiji, Michiyuki: *See—*
Hashimoto, Koichi; and Kamiji, Michiyuki, 5,699,946, Cl. 225-1.000.
Kamikado, Masaru: *See—*
Yokoyama, Satoshi; Sakane, Shinsuke; and Kamikado, Masaru, 5,700,069, Cl. 303-115.200.
Kamikubo, Keita: *See—*
Hamada, Kenji; Kirihata, Toshinori; Kamikubo, Keita; Takagi, Mikio; Nakamura, Masami; Narahara, Youzaburo; and Kawasaki, Koichi, 5,699,656, Cl. 56-11.100.
Kamiyama, Hideki: *See—*
Bisaiji, Takashi; Yu, Hideo; Kawaishi, Yasunori; Motohashi, Toshiaki; Takahashi, Mitsuru; and Kamiyama, Hideki, 5,701,566, Cl. 399-302.000.
Kamiyama, Takao; and Yokoshima, Yasuhiro, to Shonan Gosei-Jushi Seisakusho K.K.; and Yokoshima & Company. Method for lining a bent pipe. 5,700,110, Cl. 405-154.000.
Kamizawa, Koh: *See—*
Koshi, Yutaka; Kimura, Shunichi; and Kamizawa, Koh, 5,701,367, Cl. 382-239.000.
Kammerer, Eric; Biering, Lothar; Grohs, Erhard; Groht, Klaus; Reynvaan, Conrad; Siegmund, Horst; Spangenberg, Jorgen; and Uecker, Arwed, to Le Carbone Lorraine. Process for the production of multi-layered brushes and brushes obtained by the process. 5,701,046, Cl. 310-251.000.
Kamoda, Takashi: *See—*
Omiya, Akio; and Kamoda, Takashi, 5,701,523, Cl. 396-83.000.
Kanayama, Kouichi; and Maruko, Nobuhiro, to Mitsui Petrochemical Industries, Ltd. Piezoelectric transformer. 5,701,049, Cl. 310-359.000.
Kanazawa, Masaharu; Natsuhara, Toshiya; Hara, Kazuyoshi; and Tanaka, Yasuo, to Minolta Co., Ltd. Image forming apparatus with transfer member and parallel circuit of grounded electrode and power supply. 5,701,569, Cl. 399-308.000.
Kanbayashi, Makoto: *See—*
Takiguchi, Tsuyoshi; Okado, Kenji; Taya, Masaaki; Fujita, Ryoichi; Kanbayashi, Makoto; Iida, Wakashi; and Ida, Tetsuya, 5,700,617, Cl. 430-110.000.
Kanbe, Hideyuki: *See—*
Shimasaki, Yuuji; Kanbe, Hideyuki; and Kurusu, Akira, 5,700,946, Cl. 548-231.000.
Kanda, Yuji; Kokubo, Toshiyuki; Sato, Yufu; Sasaki, Toshio; Shiraishi, Hiroyuki; and Shigematsu, Yuji, to Sumitomo Chemical Company, Limited. Ethylene-α-olefin copolymer and molded article thereof. 5,700,895, Cl. 526-348.000.
Kane, John M.: *See—*

Carr, Albert A.; Kane, John M.; and Hay, David A., 5,700,812, Cl. 514-317.000.
Carr, Albert A.; Kane, John M.; and Hay, David A., 5,700,813, Cl. 514-317.000.
Kane, Roger. Security anchor. 5,699,591, Cl. 24-308.000.
Kanebo, Ltd.: *See—*
Sato, Nobumasa, 5,700,453, Cl. 424-64.000.
Kanegae, Yumi: *See—*
Saito, Izumu; Kanegae, Yumi; and Nakai, Michio, 5,700,470, Cl. 424-233.100.
Kaneko, Fumitake: *See—*
Sato, Mitsuru; Oomori, Katsumi; Ishikawa, Kiyoshi; Iguchi, Etsuko; and Kaneko, Fumitake, 5,700,625, Cl. 430-270.100.
Kaneko, Hiroyuki, to Kabushiki Kaisha Toshiba. System for independently transferring data between a plurality of disk drives and plurality of hosts in the order of drives completing disk preparation operations. 5,701,513, Cl. 395-826.000.
Kaneko, Katsuyuki, to Matsushita Electric Industrial Co., Ltd. Parallel processor system. 5,701,509, Cl. 395-800.000.
Kanno, Hideo: *See—*
Yoshibe, Koushi; and Kanno, Hideo, 5,701,209, Cl. 359-823.000.
Kanno, Hiroki, to Kabushiki Kaisha Toshiba. Image processing apparatus. 5,701,364, Cl. 382-176.000.
Kanno, Tsutomu: *See—*
Sugifune, Shin; Kanno, Tsutomu; and Nabeya, Hajime, 5,701,001, Cl. 235-472.000.
Kano, Mitsuru: *See—*
Uyama, Haruo; Harada, Takahiro; Kano, Mitsuru; Matsudaira, Nagahisa; Hoshino, Kazuhisa; Kitamura, Satoshi; Noguchi, Fuminobu; and Shikakubo, Tsutomu, 5,700,550, Cl. 428-212.000.
Kansai Electric Power Co., Inc., The: *See—*
Fujii, Masumi; Suda, Taiichiro; Hotta, Yoshitsugu; Kitamura, Koichi; Jinno, Yukihiro; Mimura, Tomio; Shimojo, Shigeru; Iijima, Masaki; and Mitsuoka, Shigeaki, 5,700,437, Cl. 423-220.000.
Kantola, James C.: *See—*
Mondek, Martin J.; and Kantola, James C., 5,700,168, Cl. 440-1.000.
Kao Corporation: *See—*
Isobe, Kazuo; Azuma, Toshikazu; Nishikawa, Hideyo; and Imamura, Takashi, 5,700,772, Cl. 510-421.000.
Katayama, Yasushi; Maeda, Kouji; Nakai, Ryozo; Muroi, Yoshiyuki; and Okajima, Takao, 5,700,449, Cl. 424-49.000.
Okada, Jouji; Kawamata, Akira; Tokunaga, Tadayuki; Nagatani, Noboru; Torizuka, Makoto; and Asahi, Masahiko, 5,700,898, Cl. 528-25.000.
Takiguchi, Osamu; Hori, Naomi; and Oda, Takashi, 5,700,892, Cl. 526-306.000.
Kaplan, David L.; and Miller, Andrew R., to Microsoft Corporation. Intelligent joining system for a relational database. 5,701,460, Cl. 395-603.000.
Kapoor, Vijay, to Motorola, Inc. Redundant acknowledgements for packetized data in noisy links and method thereof. 5,701,311, Cl. 371-32.000.
Kappel, David W.: *See—*
Minich, Arthur P.; Kappel, David W.; Hargis, David E.; and Assa, Shlomo, 5,700,076, Cl. 353-31.000.
Karathanasis, Sotirios K.: *See—*
Mak, Paul; and Karathanasis, Sotirios K., 5,700,650, Cl. 435-7.100.
Mak, Paul; and Karathanasis, Sotirios K., 5,700,682, Cl. 435-252.300.
Karg, Jeffery: *See—*
Burchard, Thomas H.; Hunter, Gregory; Johnson, Kevin M.; Karg, Jeffery; and Bertrand, John E., 5,699,832, Cl. 137-614.200.
Karges, Hermann Erich: *See—*
Zettlmeissl, Gerd; Karges, Hermann Erich; and Becker, Achim, 5,700,663, Cl. 435-69.600.
Karim, Felix: *See—*
Rubin, Gerry; Therrien, Marc; Chang, Henry; Karim, Felix; and Wassarman, David, 5,700,675, Cl. 435-194.000.
Karl Thomae, GmbH: *See—*
Pieper, Helmut; Austel, Volkhard; Himmelsbach, Frank; Linz, Günter; Guth, Brian; and Weisenberger, Johannes, 5,700,801, Cl. 514-252.000.
Karnofsky, Glenn. Martial arts target. 5,700,229, Cl. 482-83.000.
Kasahara, Kanesuke: *See—*
Ishikawa, Yuukou; Nishimoto, Noboru; Ootani, Michio; Tanibe, Tooru; Suzuki, Kazushige; and Kasahara, Kanesuke, 5,700,414, Cl. 264-247.000.
Kasahara, Michiaki; Kawano, Hazime; Inami, Kazuyoshi; Muroi, Kohichi; and Iyama, Yoshitada, to Mitsubishi Denki Kabushiki Kaisha. Phase shifter circuit using field effect transistors. 5,701,107, Cl. 333-164.000.
Kasama, Yasuhiro: *See—*
Oguchi, Satoshi; Ishihara, Masamichi; Ito, Kazuya; Murakami, Gen; Anjoh, Ichiro; Sakuta, Toshiyuki; Yamaguchi, Yasunori; Kasama, Yasuhiro; Udagawa, Tetsu; Miyamoto, Eiji; Matsuno, Youichi; Satoh, Hiroshi; and Nozoe, Atsusi, 5,701,031, Cl. 257-686.000.
Kashima, Nobukazu: *See—*
Taniguchi, Tadatsugu; Muramatsu, Masami; Sugano, Haruo; Matsui, Hiroshi; Kashima, Nobukazu; and Hamuro, Junji, 5,700,913, Cl. 530-351.000.
Kashiwa, Norio: *See—*
Tsutsui, Toshiyuki; Toyota, Akinori; and Kashiwa, Norio, 5,700,749, Cl. 502-117.000.
Tsutsui, Toshiyuki; Toyota, Akinori; and Kashiwa, Norio, 5,700,750, Cl. 502-117.000.
Kashiwagi, Takashi: *See—*
Tomoe, Naohito; and Kashiwagi, Takashi, 5,701,601, Cl. 455-226.200.
Kashiwagi, Yoshinari; Umetani, Makoto; Kataoka, Hidenao; Inoue, Kenji; Nakamura, Shoji; and Morimoto, Satoru, to Matsushita Electric Industrial Co., Ltd. Die for press-molding optical elements. 5,700,307, Cl. 65-374.100.
Kason Corporation: *See—*
Stone, Lawrence H.; Zhao, William J.; and Alamzad, Hossein, 5,700,497, Cl. 425-222.000.
Kasper, Dennis L.: *See—*
Tzianabos, Arthur O.; Onderdonk, Andrew B.; and Kasper, Dennis L., 5,700,787, Cl. 514-54.000.
Kasuya, Hideki: *See—*
Sano, Hisashi; Nakamura, Sou; Sawada, Hideshi; Adachi, Shuichi; and Kasuya, Hideki, 5,701,349, Cl. 381-71.000.
Kasuya, Takashige; Tamura, Osamu; Yusa, Hiroshi; Kobori, Takakuni; and Katada, Masaichiro, to Canon Kabushiki Kaisha. Developer for developing an electrostatic image and image forming method. 5,700,616, Cl. 430-110.000.
Katada, Masaichiro: *See—*
Kasuya, Takashige; Tamura, Osamu; Yusa, Hiroshi; Kobori, Takakuni; and Katada, Masaichiro, 5,700,616, Cl. 430-110.000.
Kataoka, Hidenao: *See—*
Kashiwagi, Yoshinari; Umetani, Makoto; Kataoka, Hidenao; Inoue, Kenji; Nakamura, Shoji; and Morimoto, Satoru, 5,700,307, Cl. 65-374.100.
Katayama, Yasushi; Maeda, Kouji; Nakai, Ryozo; Muroi, Yoshiyuki; and Okajima, Takao, to Kao Corporation. Dentifrice composition. 5,700,449, Cl. 424-49.000.
Kato, Eiichi; Nakazawa, Yusuke; and Ishii, Kazuo, to Fuji Photo Film Co., Ltd. Method for preparation of printing plate by electrophotographic process. 5,700,612, Cl. 430-49.000.
Kato, Katsuhito; and Adachi, Seiichiro, to Canon Kabushiki Kaisha. Sheet-bundle processing apparatus in which sheets are aligned using variable pressing force. 5,700,002, Cl. 270-58.120.
Kato, Masaaki: *See—*
Sugiyama, Akira; Nakayama, Tsuyoshi; Kato, Masaaki; Maruyama, Yoichiro; and Arisawa, Takashi, 5,701,320, Cl. 372-32.000.
Kato, Minoru: *See—*
Ogawa, Kazuo; Enomoto, Takaaki; Kawai, Masato; Kato, Minoru; and Sato, Kunihito, 5,701,245, Cl. 364-424.046.
Kato, Motiki, to Sony Corporation. Macroblock coding including difference between motion vectors. 5,701,164, Cl. 348-699.000.
Kato, Takashi; Tokumitsu, Jun; and Suda, Shigeyuki, to Canon Kabushiki Kaisha. Apparatus including electronic and optical zooming. 5,701,157, Cl. 348-240.000.
Kato, Tomoyuki: *See—*
Ootaka, Yoshimitsu; Kato, Tomoyuki; and Sato, Katsutoshi, 5,701,559, Cl. 399-149.000.
Kato, Yasushi; Uchida, Goro; and Uemura, Yukio, to Nippondenso Co., Ltd.; and Toyota Jidosha Kabushiki Kaisha. Air conditioner for a vehicle. 5,699,960, Cl. 237-2.00A.
Katoh, Takayuki: *See—*
Ichikawa, Atsuko; Honda, Satoshi; Katoh, Takayuki; and Ishisaka, Akira, 5,701,377, Cl. 385-124.000.
Katooka, Takashi: *See—*
Yamauchi, Satoshi; Tamura, Hiroshi; Katooka, Takashi; Tsumura, Naoki; Hikichi, Naoto; Narumi, Chihiro; Ezaki, Takashi; Kado, Shozo; and Ooguro, Yoshihisa, 5,701,497, Cl. 395-753.000.
Katsuki, Shinji: *See—*
Matsumoto, Kissei; Fuchu, Katsuki; and Katsuki, Shinji, 5,701,282, Cl. 369-32.000.
Katsumata, Ryoichi; and Takano, Yutaka, to Kyowa Hakko Kogyo Co., Ltd. Gene expression regulatory DNA. 5,700,661, Cl. 435-69.100.
Katsuro, Noboru; Suemoto, Toshiro; Mizutani, Yoshihiro; and Shini, Masami, to Fujicopian Co., Ltd. Pressure-sensitive correction tape. 5,700,552, Cl. 428-214.000.
Katsuyama, Akira; Tomizawa, Kenji; Nagano, Shuichi; and Koya, Takashi, to Sony Corporation. Apparatus for replaying a recording medium having means for displaying the contents of the recording medium as graphics images which include a series of intra-pictures. 5,701,385, Cl. 386-106.000.
Katz, Itzhak: *See—*
Alon, Amir; Heiman, Arie; and Katz, Itzhak, 5,701,283, Cl. 369-44.410.
Kaufman, Kenneth: *See—*
Chuang, Strong C.; Kaufman, Kenneth; and Schiesser, Robert H., 5,699,626, Cl. 34-453.000.
Kaulen, Johannes: *See—*
Mittendorf, Joachim; Fey, Peter; Junge, Bodo; Kaulen, Johannes; Laak, Kai van; Meier, Heinrich; and Schohe-Loop, Rudolf, 5,700,948, Cl. 548-531.000.
Kawahara, Megumi; Yamada, Ikuko; Shoshi, Masayuki; and Kojima, Akio, to Ricoh Company, Ltd. cyclopentadiene derivative compounds and electrophotographic photoconductor comprising one cyclopentadiene derivative compound. 5,700,614, Cl. 430-59.000.
Kawai, Masato: *See—*
Ogawa, Kazuo; Enomoto, Takaaki; Kawai, Masato; Kato, Minoru; and Sato, Kunihito, 5,701,245, Cl. 364-424.046.
Kawai, Takeshi: *See—*
Yamada, Tessho; Yabuta, Katsuhisa; Kawai, Takeshi; and Toyoda, Hideki, 5,700,367, Cl. 205-785.000.
Kawaishi, Yasunori: *See—*

Bisaiji, Takashi; Yu, Hideo; Kawaishi, Yasunori; Motohashi, Toshiaki; Takahashi, Mitsuru; and Kamiyama, Hideki, 5,701,566, Cl. 399-302.000.
Kawajiri, Tatsuya: *See—*
Kurimoto, Ikuo; Kawajiri, Tatsuya; Onodera, Hideo; Tanimoto, Michio; and Aoki, Yukio, 5,700,752, Cl. 502-311.000.
Kawakami, Fukushi: *See—*
Yamazaki, Ryokichi; Sakai, Takeshi; and Kawakami, Fukushi, 5,700,052, Cl. 297-217.300.
Kawakita, Toshio: *See—*
Kotani, Kozo; Kawakita, Toshio; Sakaya, Taiichi; and Kuroda, Toshiya, 5,700,560, Cl. 428-325.000.
Kawamata, Akira: *See—*
Okada, Jouji; Kawamata, Akira; Tokunaga, Tadayuki; Nagatani, Noboru; Torizuka, Makoto; and Asahi, Masahiko, 5,700,898, Cl. 528-25.000.
Kawamata, Masahiro: *See—*
Miyakawa, Futoshi; Kawamata, Masahiro; Hamada, Yoshiaki; Asao, Kosuke; and Kajikawa, Tsuneo, 5,699,872, Cl. 180-291.000.
Kawamura, Akihisa; Ishikawa, Satoshi; and Iizuka, Hiroaki, to Yazki Corporation. Relay device for rotating members. 5,700,153, Cl. 439-164.000.
Kawamura, Eiichi: *See—*
Kutami, Atsushi; Kawamura, Eiichi; and Kubo, Keishi, 5,700,746, Cl. 501-201.000.
Kawamura, Shigeo: *See—*
Nishikawa, Michinori; Miyamoto, Tsuyoshi; Kawamura, Shigeo; Yasuda, Kyouyu; Mutsuga, Yasuaki; and Matsuki, Yasuo, 5,700,860, Cl. 524-317.000.
Kawanishi, Souroku: *See—*
Izunome, Koji; Kawanishi, Souroku; Togawa, Shinji; Ikari, Atsushi; Sasaki, Hitoshi; and Kimura, Shigeyuki, 5,700,320, Cl. 117-19.000.
Kawanishi, Toshiharu: *See—*
Nagashima, Tetsuro; Kawanishi, Toshiharu; Okutani, Shigeaki; Nomura, Osamu; and Iino, Takashi, 5,701,436, Cl. 395-489.000.
Kawanishi, Tsuneaki: *See—*
Tsujita, Akio; Anzai, Masayasu; and Kawanishi, Tsuneaki, 5,701,560, Cl. 399-159.000.
Kawano, Hazime: *See—*
Kasahara, Michiaki; Kawano, Hazime; Inami, Kazuyoshi; Muroi, Kohichi; and Iyama, Yoshitada, 5,701,107, Cl. 333-164.000.
Kawanobe, Norio, to Daitoh System Company, Ltd. Method of washing a blind. 5,700,328, Cl. 134-1.000.
Kawasaki, Glenn, to ZymoGenetics, Inc. Stable DNA constructs. 5,700,643, Cl. 435-6.000.
Kawasaki Jukogyo Kabushiki Kaisha: *See—*
Isaji, Kazutoshi, 5,699,969, Cl. 241-24.120.
Kawasaki, Koichi: *See—*
Hamada, Kenji; Kirihata, Toshinori; Kamikubo, Keita; Takagi, Mikio; Nakamura, Masami; Narahara, Youzaburo; and Kawasaki, Koichi, 5,699,656, Cl. 56-11.100.
Kawasaki, Naoki; Ohta, Mitsuhiko; and Ikeya, Toshiaki, to Suzuki Kabushiki Kaisha. Fuel supplying system for vertical engine with multiple cylinders. 5,699,777, Cl. 123-580.000.
Kawasaki Steel Corporation: *See—*
Mano, Junichi; Ogawa, Youzou; Mabuchi, Masaki; Okuno, Keizou; and Totsuka, Nobuo, 5,700,561, Cl. 428-327.000.
Nakagawa, Tsuguhiko; Yamaguchi, Ryosuke; Osanai, Hisashi; Hasunuma, Junichi; and Yamamoto, Takemi, 5,700,420, Cl. 266-44.000.
Kawashima, Kazunari: *See—*
Takemoto, Takatoshi; and Kawashima, Kazunari, 5,700,997, Cl. 235-1.00H.
Kawashima, Syunichiro: *See—*
Okuyama, Kojiro; Shimoyama, Koji; Kawashima, Syunichiro; and Kugimiya, Koichi, 5,700,745, Cl. 501-134.000.
Kawazu, Zempei: *See—*
Hayafuji, Norio; and Kawazu, Zempei, 5,701,321, Cl. 372-44.000.
Kay Seven Co., Ltd.: *See—*
Kuribayashi, Sadatomo, 5,700,197, Cl. 464-69.000.
Kazami, Kazuyuki: *See—*
Yokonuma, Norikazu; Kazami, Kazuyuki; Yamazaki, Youichi; and Hibino, Hideo, 5,701,529, Cl. 396-310.000.
Kean, Thomas A., to Xilinx, Inc. Routing resources for hierarchical FPGA. 5,701,091, Cl. 326-41.000.
Keck, Peter C.: *See—*
Crea, Roberto; Pang, Roy Hoi Loi; Oppermann, Hermann; Keck, Peter C.; Alvarado-Urbina, Gabriel; Wu, Gay-May; and Cohen, Charles M., 5,700,677, Cl. 435-226.000.
Keefer, Larry K.: *See—*
Korthuis, Ronald J.; Kong, Lipu; and Keefer, Larry K., 5,700,830, Cl. 514-426.000.
Keehn, Douglas Allen, Jr.: *See—*
Ousley, Frank Benson, II; and Keehn, Douglas Allen, Jr., 5,700,172, Cl. 440-88.000.
Keenan, Francis J.: *See—*
Goyette, William J.; and Keenan, Francis J., 5,700,439, Cl. 423-230.000.
Keener, Don Steven; and Moore, Gregory James, to International Business Machines Corporation. System providing user definable selection of different data transmission modes of drivers of an I/O controller transmitting to peripherals with different data transmission rate. 5,701,514, Cl. 395-834.000.
Kehoe, Michael; and Pinkney, Michael. Streptolysin O antigen derivatives, their production and uses. 5,700,648, Cl. 435-7.100.
Kehr, Wolfgang: *See—*
Biere, Helmut; Huth, Andreas; Rahtz, Dieter; Schmiechen, Ralph; Seidelmann, Dieter; Kehr, Wolfgang; Schneider, Herbert Hans; Engelstoft, Mogens; Hansen, Bondo John; Waetjen, Frank; and Honoré, Tage, 5,700,808, Cl. 514-292.000.
Keller, David J.: *See—*
Becker, David S.; and Keller, David J., 5,700,580, Cl. 428-446.000.
Keller, John A. Security improved card. 5,700,037, Cl. 283-107.000.
Keller, Robert Scott: *See—*
Johnson, William J.; Keller, Robert Scott; Manthuruthil, George C.; and Williams, Marvin L., 5,701,510, Cl. 395-806.000.
Kelley, H. Ray: *See—*
Attaway, Brett W.; Lofgren, John D.; and Kelley, H. Ray, 5,701,308, Cl. 371-22.300.
Kelley, Michael W.; and Winner, Stephanie L., to Apple Computer, Inc. Method and apparatus for directly evaluating a parameter interpolation function used in rendering images in a graphics system that uses screen partitioning. 5,701,405, Cl. 395-141.000.
Kellner, Walter-Ulrich; Küsters, Karl-Heinz; Müller, Wolfgang; and Stelz, Franz-Xaver, to Siemens Aktiengesellschaft. Semiconductor memory device with trench capacitor. 5,701,022, Cl. 257-300.000.
Kells, Timothy Roger: *See—*
Bsaibes, Mounir Emile; and Kells, Timothy Roger, 5,701,458, Cl. 395-609.000.
Kelly, Bryan M.; Petermeier, Norman B.; Kelly, Matthew F.; and Oltmann, J. Richard, to RLT Acquisition, Inc. Ticket redemption arcade game. 5,700,007, Cl. 273-118.00A.
Kelly, Matthew F.: *See—*
Kelly, Bryan M.; Petermeier, Norman B.; Kelly, Matthew F.; and Oltmann, J. Richard, 5,700,007, Cl. 273-118.00A.
Kelly, Stephen, to Rolic AG. Liquid crystalline compounds. 5,700,393, Cl. 252-299.630.
Kemcast Partners-1989: *See—*
Kemerer, W. James; Vassar, Clyde W., deceased, 5,700,495, Cl. 425-190.000.
Kemerer, W. James; Vassar, Clyde W., deceased (by Jean F. Vassar, administrator), to Kemcast Partners-1989. Continuous 3-D forming machine for forming three-dimensional products from thermoplastic materials. 5,700,495, Cl. 425-190.000.
Kemink, Randall Gail: *See—*
Goth, Gary Franklin; Kemink, Randall Gail; Loparco, John Joseph; and Schmidt, Roger Ray, 5,699,853, Cl. 165-104.210.
Kemmler, Lothar; and Kolbenschlag, Stefan, to Samson Aktiengesellschaft. Electrical-pneumatic system. 5,699,824, Cl. 137-85.000.
Kemp, Kenneth A.: *See—*
Wieloch, Francis J.; LaManna, Gina M.; Jackson, Frank J., Jr.; Smallman, Gary W.; Kemp, Kenneth A.; Speakman, Edward J.; Grabowski, Edward F.; Street, Terry L.; Wisniewski, Carl A.; and Czerniawski, John A., 5,699,584, Cl. 15-256.520.
Kenmochi, Yasuhiko: *See—*
Ishikawa, Hiroki; Kenmochi, Yasuhiko; Bando, Takeshi; Hayashi, Masaho; and Shinogi, Norikazu, 5,699,912, Cl. 206-494.000.
Kenna, John M.: *See—*
Piacente, Robert A.; Madulka, Karol Anne Liu; and Kenna, John M., 5,700,088, Cl. 374-141.000.
Kennametal Inc.: *See—*
Liu, Yixiong, 5,701,578, Cl. 428-565.000.
Kennecke, Mario: *See—*
Hummel-Marquardt, Heidi; Schmitz, Thomas; Kennecke, Mario; and Weber, Alfred, 5,700,666, Cl. 435-88.000.
Kennedy, Adam M.: *See—*
Ray, Michael; and Kennedy, Adam M., 5,701,008, Cl. 250-352.000.
Kensey Nash Corporation: *See—*
Nash, John; and Evans, Douglas, 5,700,277, Cl. 606-213.000.
Keplinger, Edward G.: *See—*
Bellemare, Richard A.; and Keplinger, Edward G., 5,701,183, Cl. 358-404.000.
Ker, Yen-Chun: *See—*
Li, Kuo-Tseng; and Ker, Yen-Chun, 5,700,440, Cl. 423-231.000.
Kere, Juha; Schlessinger, David; de la Chapelle, Albert; and Srivastava, Anand Kumar, to Washington University. Molecular cloning of the anhidrotic ectodermal dysplasia gene. 5,700,926, Cl. 536-23.100.
Keri, Gyorgi: *See—*
Hirth, Klaus Peter; Schwartz, Donna Pruess; Mann, Elaina; Shawver, Laura Kay; Keri, Gyorgi; Szekely, Istvan; Bajor, Tamas; Haimichael, Janis; Orfi, Laszlo; Levitzki, Alex; Gazit, Aviv; Ullrich, Axel; Lammers, Reiner; Kabbinavar, Fairooz F.; Slamon, Dennis; and Tang, Peng Cho, 5,700,822, Cl. 514-380.000.
Kéri, György: *See—*
Hirth, Klaus Peter; Schwartz, Donna Pruess; Mann, Elaina; Shawver, Laura Kay; Kéri, György; Székely, István; Bajor, Tamás; Haimichael, Janis; Orfi, László; Levitzki, Alex; Gazit, Aviv; Ullrich, Axel; and Lammers, Reiner, 5,700,823, Cl. 514-380.000.
Kern, Ingrid: *See—*
Mueller, Johann; and Kern, Ingrid, 5,700,870, Cl. 524-837.000.
Kerr, Donavan O.: *See—*
Leatherbury, Colin C.; and Kerr, Donavan O., 5,700,021, Cl. 280-47.350.
Kerr-McGee Chemical Corporation: *See—*

Brand, John R.; and Green, Kelly A., 5,700,318, Cl. 106-442.000.
Kerscher, Volker: *See—*
Brehm, Manfred; Neeb, Rolf; Scharnke, Wolfgang; and Kerscher, Volker, 5,700,576, Cl. 428-412.000.
Keymed (Medical & Industrial Equipment) Ltd.: *See—*
Sanders, Mark Andrew; and Kalogroulis, Alexander Joseph, 5,699,567, Cl. 5-614.000.
Khan-Lodhi, Abid Nadim: *See—*
Haq, Ziya; Khan-Lodhi, Abid Nadim; and Sams, Philip John, 5,700,387, Cl. 252-8.630.
Khatibzadeh, Ali: *See—*
Hill, Darrell; Fan, Shou-Kong; and Khatibzadeh, Ali, 5,700,701, Cl. 437-31.000.
Kidshop, Inc.: *See—*
Gold, Laurence H., 5,699,711, Cl. 83-743.000.
Kiekert AG: *See—*
Jahrsetz, Achim; Kleefeldt, Frank; Ostermann, Wilfried; and Weiskopf, Fred, 5,699,685, Cl. 70-264.000.
Kiel, Bernd; and Unser, Karl-Heinz, to Wabco GmbH; and Mercedes-Benz AG. Pressure medium actuated vehicle braking system. 5,700,063, Cl. 303-961.000.
Kienow, Ekkehard; Morun, Bernd; Schwertmann, Thomas; and Hoberg, Heinz, to Rheinische Kalksteinwerke GmbH. Method for the cleaning of exhaust gas and prevention of explosions therein. 5,700,441, Cl. 423-244.070.
Kiernan, Casey L.; and Jancke, Gavin, to Microsoft Corporation. Method for separating a hierarchical tree control into one or more hierarchical child tree controls in a graphical user interface. 5,701,137, Cl. 345-119.000.
Kikkoman Corporation: *See—*
Koyama, Yasuji; and Ichikawa, Toshio, 5,700,674, Cl. 435-191.000.
Kikuchi, Katsuhide; Hayashi, Hitoshi; Takeuchi, Akira; and Takigawa, Kenji, to Nippon Soken, Inc. Antiferroelectric liquid crystal composition. 5,700,392, Cl. 252-299.010.
Kilama, John Jolly, to Du Pont de Nemours, E. I., and Company; and Degussa Aktiengesellschaft. Herbicidal tricyclic heterocycles. 5,700,761, Cl. 504-221.000.
Kilgannon, Patrick D.; and Gallatin, W. Michael, to ICOS Corporation. ICAM-4 materials and methods. 5,700,658, Cl. 435-69.100.
Kim, Byoung Eog: *See—*
Woo, Soon Hyung; Chung, Sung Kee; Ban, Soo Ho; Kim, Byoung Eog; and Kim, Si Hwan, 5,700,817, Cl. 514-340.000.
Kim, Chang Sik, to Samsung Electro-Mechanics Co., Ltd. Manufacturing apparatus of composite filter. 5,700,324, Cl. 118-407.000.
Kim, Chang-seob; Son, Seok-bong; Kim, Sang-kyun; and Jeong, Bong-uk, to Samsung Display Devices Co., Ltd. Directly heated cathode structure. 5,701,052, Cl. 313-346.00R.
Kim, Chang-yong, to Samsung Electronics Co., Ltd. Multi-processor system provided with bus control module. 5,701,440, Cl. 395-500.000.
Kim, Choong-Ki: *See—*
Han, Chul-Hi; Kim, Choong-Ki; Lee, Jung-Yeal; and Oh, Kil-Hwan, 5,700,699, Cl. 437-21.000.
Kim, Chun Suk: *See—*
Park, Tae Ho; Kim, Chun Suk; and Moon, Sung Hun, 5,700,744, Cl. 501-15.000.
Kim, Dong-Myung: *See—*
Lee, Jai-Young; Lee, Hwan-Cheol; Lee, Jon-Ha; Lee, Han-Ho; and Kim, Dong-Myung, 5,701,078, Cl. 324-430.000.
Kim, Gyu-Seok, to Daewoo Electronics, Co., Ltd. High speed variable length decoder. 5,701,126, Cl. 341-67.000.
Kim, Hae-Sug, to Samsung Electronics Co., Ltd. Radio calling method and apparatus for removing near-far problem. 5,701,587, Cl. 455-34.100.
Kim, Jae-Ho: *See—*
Moon, Yong-Ho; Kim, Jae-Ho; and Park, Dong-Seek, 5,701,369, Cl. 382-249.000.
Kim, Jeong Gun: *See—*
Park, Young Jae; Park, San Il; Choi, Kyoung Bin; Ha, Young Jin; Park, Ki Ho; Ko, Chang Bog; and Kim, Jeong Gun, 5,699,852, Cl. 165-76.000.
Kim, Jinseong: *See—*
Park, Seonghyon; Kim, Jinseong; and Park, Donghoon, 5,700,223, Cl. 475-269.000.
Kim, Joo-Hwan: *See—*
Lee, Chang-Yong; Kim, Joo-Hwan; and Ryu, Soo-Sun, 5,699,848, Cl. 164-46.000.
Kim, Marn Go: *See—*
Youn, Myung Joong; Moon, Gun Woo; and Kim, Marn Go, 5,701,243, Cl. 363-89.000.
Kim, Sang-kyun: *See—*
Kim, Chang-seob; Son, Seok-bong; Kim, Sang-kyun; and Jeong, Bong-uk, 5,701,052, Cl. 313-346.00R.
Kim, Si Hwan: *See—*
Woo, Soon Hyung; Chung, Sung Kee; Ban, Soo Ho; Kim, Byoung Eog; and Kim, Si Hwan, 5,700,817, Cl. 514-340.000.
Kim, Young Sun: *See—*
Jeon, Byung Chun; Do, Mi Sun; Park, Chun Kwan; Oh, Chang Whan; and Kim, Young Sun, 5,701,300, Cl. 370-392.000.
Kimberley Clark Corporation: *See—*
Sukiennik, Corrine A.; Mathis, Michael P.; and Gray, Vivian, 5,699,791, Cl. 128-206.130.
Kimberly-Clark Corporation: *See—*
Cohen, Bernard; Jameson, Lee Kirby; Gipson, Lamar Heath; and Faass, Judith Katherine, 5,700,553, Cl. 428-220.000.
Kimberly-Clark Worldwide: *See—*
Nohr, Ronald Sinclair; and MacDonald, John Gavin, 5,700,850, Cl. 522-34.000.
Kimberly-Clark Worldwide, Inc.: *See—*
Chuang, Strong C.; Kaufman, Kenneth; and Schiesser, Robert H., 5,699,626, Cl. 34-453.000.
Cole, Douglas Bryan, 5,700,842, Cl. 514-721.000.
Gillberg-LaForce, Gunilla Elsa; Hetzler, Kevin George; and Jacobs, Rob Lee, 5,700,531, Cl. 428-36.100.
McDowall, Debra Jean; Sawyer, Lawrence Howell; Wright, Robert David; and Varona, Eugenio, 5,700,254, Cl. 604-378.000.
Kimberly Clark Worlwide, Inc.: *See—*
Wang, James Hongxue; and Schertz, David Michael, 5,700,872, Cl. 525-187.000.
Kimura, Fujimi; Tanaka, Toyoaki; Dobashi, Akihiko; and Abe, Takashi, to TDK Corporation. Method for manufacturing thin film magnetic head. 5,700,381, Cl. 216-22.000.
Kimura, Junichi; and Kinoshita, Taizo, to Hitachi, Ltd. Image encoding and decoding apparatus. 5,701,160, Cl. 348-413.000.
Kimura, Shigeyuki: *See—*
Izumome, Koji; Kawanishi, Souroku; Togawa, Shinji; Ikari, Atsushi; Sasaki, Hitoshi; and Kimura, Shigeyuki, 5,700,320, Cl. 117-19.000.
Kimura, Shunichi: *See—*
Koshi, Yutaka; Kimura, Shunichi; and Kamizawa, Koh, 5,701,367, Cl. 382-239.000.
Kimura, Yoshikazu: *See—*
Fujii, Kanenaga; Kiuchi, Masato; Nagasaka, Hiroshi; Kimura, Yoshikazu; and Tsuchiya, Naoki, 5,700,546, Cl. 428-156.000.
Kimura, Yoshimasa: *See—*
Hosaka, Masao; Kimura, Yoshimasa; and Sakamaki, Hisashi, 5,701,481, Cl. 395-676.000.
Kinard, George. Floor support for expansive soils. 5,699,643, Cl. 52-742.140.
Kincaid, Kevin Dale, to Delco Electronics Corp. Current feedback control of AC deployment current for supplemental inflatable restraints. 5,701,038, Cl. 307-10.100.
Kinetikos Medical Incorporated: *See—*
Urbanski, Mark Gerald, 5,700,267, Cl. 606-86.000.
King, Willie: *See—*
Curro, John Joseph; Wolf, Scot G.; and King, Willie, 5,700,255, Cl. 604-385.200.
Kinjo, Morishige; and Ishibashi, Eiji, to Kabushiki Kaisha Toshiba. Dual-memory managing apparatus and method including prioritization of backup and update operations. 5,701,437, Cl. 395-489.000.
Kinoshita, Taizo: *See—*
Kimura, Junichi; and Kinoshita, Taizo, 5,701,160, Cl. 348-413.000.
Kinsey, Jon W.: *See—*
Balagurumurthy, Ravichandran; and Kinsey, Jon W., 5,700,058, Cl. 297-440.150.
Kioritz Corporation: *See—*
Yamaguchi, Shiro; and Miyamoto, Masayoshi, 5,699,761, Cl. 123-73.00A.
Kirihata, Toshinori: *See—*
Hamada, Kenji; Kirihata, Toshinori; Kamikubo, Keita; Takagi, Mikio; Nakamura, Masami; Narahara, Youzaburo; and Kawasaki, Koichi, 5,699,656, Cl. 56-11.100.
Kirk, Ole: *See—*
Damhus, Ture; Kirk, Ole; Pedersen, Gitte; and Venegas, Manuel Garcia, 5,700,770, Cl. 510-305.000.
Kirk, Richard O.: *See—*
Pham, Hoang T.; Strait, Chad A.; and Kirk, Richard O., 5,700,885, Cl. 525-534.000.
Kirkland, James B., Jr.; and McDonald, Edward A., to NCR Corporation. Method for ensuring cycle ordering requirements within a hierarchical bus system including split-transaction buses. 5,701,422, Cl. 395-309.000.
Kirkpatrick, Donald E.: *See—*
Hahnfeld, Jerry L.; Bee, Timothy G.; Kirkpatrick, Donald E.; Tung, Lu Ho; and Pike, William C., 5,700,887, Cl. 526-182.000.
Kirsch, Gerald: *See—*
Steinmeyer, Andreas; Neef, Gunter; Kirsch, Gerald; Schwarz, Katica; Thieroff-Ekerdt, Ruth; Wiesinger, Herbert; and Haberey, Martin, 5,700,791, Cl. 514-167.000.
Kishbaugh, Alan Jay: *See—*
Hancock, Lawrence Francis; Kishbaugh, Alan Jay; and Parham, Marc Ellous, 5,700,902, Cl. 528-373.000.
Hancock, Lawrence Francis; Kishbaugh, Alan Jay; and Parham, Marc Ellous, 5,700,903, Cl. 528-373.000.
Kishida, Tetsuo: *See—*
Hori, Kenjiro; Akiyama, Satoshi; Takubo, Takefumi; and Kishida, Tetsuo, 5,701,182, Cl. 358-296.000.
Kiso, Makato: *See—*
Hasegawa, Akira; Kiso, Makato; and Yoshikumi, Yoshiaki, 5,700,918, Cl. 536-18.700.
Kiss, András: *See—*
Alesz, József; Busznyák, Imre; Glódi, István; Kiss, András; Kukta, Józsefné; Nagy, Béla; Salamon, Péter; Szentpétery, Elemér; Tóth, Zoltán; and Ujhelyi, Tamás, 5,700,957, Cl. 73-861.357.
Kissel, Holger: *See—*
Nieling, Andreas; Frank, Wolfgang; Kissel, Holger; Koehler, Reinhard; and Mueller, Werner, 5,700,191, Cl. 454-69.000.

Kitaguchi, Tooru; and Yoneda, Mikio, to Daicel Chemical Industries, Ltd. Composite magneto-optical information recording media. 5,700,565, Cl. 428-332.000.
Kitakaze, Masafumi, to Otsuka Pharmaceutical Co., Ltd. Method for reducing infarct size in subjects afflicted with ischemic heart disease. 5,700,803, Cl. 514-254.000.
Kitamura, Akio: *See—*
Fujishima, Naoto; and Kitamura, Akio, 5,701,026, Cl. 257-510.000.
Kitamura, Koichi: *See—*
Fujii, Masumi; Suda, Taiichiro; Hotta, Yoshitsugu; Kitamura, Koichi; Jinno, Yukihiro; Mimura, Tomio; Shimojo, Shigeru; Iijima, Masaki; and Mitsuoka, Shigeaki, 5,700,437, Cl. 423-220.000.
Kitamura, Satoshi: *See—*
Uyama, Haruo; Harada, Takahiro; Kano, Mitsuru; Matsudaira, Nagahisa; Hoshino, Kazuhisa; Kitamura, Satoshi; Noguchi, Fuminobu; and Shikakubo, Tsutomu, 5,700,550, Cl. 428-212.000.
Kitazawa, Michihiro: *See—*
Nogami, Sumitaka; Kitazawa, Michihiro; and Sato, Katsuhiro, 5,700,613, Cl. 430-58.000.
Kiuchi, Masato: *See—*
Fujii, Kanenaga; Kiuchi, Masato; Nagasaka, Hiroshi; Kimura, Yoshikazu; and Tsuchiya, Naoki, 5,700,546, Cl. 428-156.000.
Klainer, Stanley M.; Walt, David R.; and Gottlieb, Amos J., to Optical Sensors Incorporated. Method for making fluorescent polymers. 5,700,897, Cl. 528-15.000.
Klassen, R. Victor: *See—*
Harrington, Steven J.; and Klassen, R. Victor, 5,701,365, Cl. 382-312.000.
Klatt, Bruno; Horx, Manfred; Koelling, Hartmut; Berndt, Karlheinz; Krueger, Gerhard; Kuenne, Hans-Joachim; Moerl, Lothar; and Backhaus, Lothar, to Heraeus Elektrochemie GmbH; and Magdeburger Energie - und Umwelttechnik GmbH. PTFE fibre material and process for making it. 5,700,572, Cl. 428-357.000.
Klaus, Michael; and Mohr, Peter, to Hoffmann-La Roche Inc. Aromatic carboxylic acid derivatives. 5,700,836, Cl. 514-544.000.
Klebahn, Perry A.; and Klingbeil, James D., to Atlas Snow-Shoe Company. Snowshoe with front and rear cleats. 5,699,630, Cl. 36-124.000.
Kleefeldt, Frank: *See—*
Jahrsetz, Achim; Kleefeldt, Frank; Ostermann, Wilfried; and Weiskopf, Fred, 5,699,685, Cl. 70-264.000.
Klein, Werner: *See—*
Hund, Kerstin; Klein, Werner; Kördel, Werner; Görtz, Theo; and Schwarzer, Norbert, 5,700,109, Cl. 405-128.000.
Kleiner, Michael: *See—*
Weber, Werner; Kuehn, Stefan; Kleiner, Michael; and Thewes, Roland, 5,701,037, Cl. 257-777.000.
Kleiner, Richard N.: *See—*
Ritland, Marcus A.; Readey, Dennis W.; Kleiner, Richard N.; and Sibold, Jack D., 5,700,373, Cl. 210-323.200.
Kleppner, Stephan; and Seitz, Ansgar, to Robert Bosch GmbH. Arrangement for pumping fuel out of a supply tank to an internal combustion engine. 5,699,773, Cl. 123-510.000.
Kleschick, William A.: *See—*
Van Heertum, John C.; Kleschick, William A.; Arndt, Kim E.; Costales, Mark J.; Ehr, Robert J.; Bradley, Kimberly Brubaker; Reifschneider, Walter; Benkö, Zoltan; Ash, Mary Lynne; and Jachetta, John J., 5,700,940, Cl. 546-119.000.
Klimek, John Ramon; and Weiss, David, to Siemens Business Communication Systems, Inc. Path length delay compensation in an open-loop system. 5,701,334, Cl. 375-364.000.
Klingbeil, James D.: *See—*
Klebahn, Perry A.; and Klingbeil, James D., 5,699,630, Cl. 36-124.000.
Klingenstein, Ralph James. Lumen-seeking nasogastric tube and method. 5,700,252, Cl. 604-280.000.
Klingler, Horst: *See—*
Muller, Joachim; and Klingler, Horst, 5,699,736, Cl. 101-232.000.
Klintworth, Johann: *See—*
Klintworth, Klaus; and Klintworth, Johann, 5,699,917, Cl. 209-18.000.
Klintworth, Klaus; and Klintworth, Johann. Method and apparatus for separating crops and impurities. 5,699,917, Cl. 209-18.000.
Klintz, Ralf: *See—*
Schäfer, Peter; Klintz, Ralf; Hamprecht, Gerhard; Heistracher, Elisabeth; Westphalen, Karl-Otto; Gerber, Matthias; and Walter, Helmut, 5,700,805, Cl. 514-269.000.
Klockner-Humboldt-Deutz AG: *See—*
Schleimer, Friedrich; and Ameis, Dieter, 5,700,144, Cl. 432-161.000.
Klose, Helmut; Biebl, Markus; Scheiter, Thomas; and Hierold, Christofer, to Siemens Aktiengesellschaft. Method for manufacturing an acceleration sensor. 5,700,702, Cl. 437-34.000.
Kluwe, Wolf: *See—*
Froehlich, Franz-Pr; Kluwe, Wolf; and Meitsch, Hans-Juergen, 5,700,012, Cl. 277-66.000.
Kneseck, Benjamin W.: *See—*
Bauer, Carl J.; and Kneseck, Benjamin W., 5,700,319, Cl. 106-486.000.
KNF Neuberger GmbH: *See—*
Hauser, Erwin, 5,699,992, Cl. 248-635.000.
Riedlinger, Heinz, 5,699,717, Cl. 92-98.00R.
Knight, Stephen Arthur: *See—*
Gilbertson, Todd Andrew; and Knight, Stephen Arthur, 5,701,486, Cl. 395-704.000.
Knoll, Konrad; and Gausepohl, Hermann, to BASF Aktiengesellschaft. Thermoplastic molding material. 5,700,876, Cl. 525-314.000.
Knox, Wayne Harvey: *See—*
Cunningham, John Edward; Jan, William Young; Knox, Wayne Harvey; and Tsuda, Sergio, 5,701,327, Cl. 372-99.000.
Knuchel, Bernard: *See—*
Koelemeijer, Alexandra; Knuchel, Bernard; Letoublon, Laurent; and Olgiati, Stéphane, 5,700,963, Cl. 84-95.100.
Ko, Chang Bog: *See—*
Park, Young Jae; Park, San Il; Choi, Kyoung Bin; Ha, Young Jin; Park, Ki Ho; Ko, Chang Bog; and Kim, Jeong Gun, 5,699,852, Cl. 165-76.000.
Kobata, Kiyoshi: *See—*
Okumura, Hideki; Sakamoto, Kazunori; Kobata, Kiyoshi; and Kubota, Kazunori, 5,701,225, Cl. 360-132.000.
Kobayashi, Akira; Kurashima, Hideo; Sato, Harumi; Fujita, Satoshi; and Imazu, Katsuhiro, to Toyo Seikan Kaisha, Ltd. Seamless can and a method of producing the same. 5,700,529, Cl. 428-35.800.
Kobayashi, Hisakazu: *See—*
Ota, Masaki; Okadome, Youichi; Kobayashi, Hisakazu; and Hamasaki, Masaru, 5,699,716, Cl. 92-12.200.
Kobayashi, Makoto: *See—*
Hasegawa, Fumihiko; Kobayashi, Makoto; and Hirano, Tameyoshi, 5,700,179, Cl. 451-41.000.
Kobayashi, Osamu: *See—*
Kumagai, Tatsuya; Kajioka, Hiroshi; Kobayashi, Osamu; Akiyama, Munehiro; Oho, Shigeru; and Sonobe, Hisao, 5,701,177, Cl. 356-330.000.
Kobayashi, Shinji; and Inoue, Masashi, to Sharp Kabushiki Kaisha. Photomask and a manufacturing method thereof. 5,700,606, Cl. 430-5.000.
Kobayashi, Tetsuo: *See—*
Taniyama, Akira; Morijiri, Makoto; Tanaka, Haruko; Yaito, Isamu; Ashida, Eiji; Koyanagi, Hiroaki; Tanabe, Hideo; and Kobayashi, Tetsuo, 5,701,221, Cl. 360-113.000.
Kobayashi, Yoichi; and Komuro, Kiyoto, to Seiko Epson Corporation. Ink jet printer. 5,700,099, Cl. 400-625.000.
Kobayashi, Yoshiaki: *See—*
Sakabe, Namiko; Ishimaru, Toshiaki; Kobayashi, Yoshiaki; and Suzuki, Takashi, 5,701,527, Cl. 396-277.000.
Kobayashi, Yutaka: *See—*
Ikeda, Shuji; Meguro, Satoshi; Hashiba, Soichiro; Kuramoto, Isamu; Koike, Atsuyoshi; Sasaki, Katsuro; Ishibashi, Koichiro; Yamanaka, Toshiaki; Hashimoto, Naotaka; Moriwaki, Nobuyuki; Takahashi, Shigeru; Hiraishi, Atsushi; Kobayashi, Yutaka; and Yukutake, Seigou, 5,700,704, Cl. 437-52.000.
Kobilansky, Alex: *See—*
Sauer, Jude S.; Greenwald, Roger J.; Oravecz, Michael G.; and Kobilansky, Alex, 5,700,236, Cl. 600-175.000.
Kobori, Takakuni: *See—*
Kasuya, Takashige; Tamura, Osamu; Yusa, Hiroshi; Kobori, Takakuni; and Katada, Masaichiro, 5,700,616, Cl. 430-110.000.
Koboshi, Shigeharu: *See—*
Ueda, Yutaka; Okauchi, Ken; and Koboshi, Shigeharu, 5,701,541, Cl. 396-569.000.
Koch, Dean; and Shutic, Jeff, to Nordson Corporation. Anti-contamination valve for powder delivery system. 5,700,323, Cl. 118-308.000.
Koch, Norbert; Böhm, Kurt; Schefcsik, Nikolaus; and Eipper, Jürgen, to Mercedes-Benz AG. Automatic play compensation in cable operated brakes especially of motor vehicles. 5,699,884, Cl. 188-196.00B.
Kocian, Frank, to Deutsche Forschungsanstalt fuer Luft- und Raumfahrt e.V. Temperature-adjustable compressor guide vane ring. 5,700,129, Cl. 415-138.000.
Koda, Rikki; and Dolezal, Anthony James, to Motorola, Inc. Wireless data communication system and method using an electroluminescent panel. 5,701,189, Cl. 359-172.000.
Kodama, Nobumasa: *See—*
Yokozawa, Shinjiro; Kodama, Nobumasa; and Ogawara, Toshiki, 5,701,045, Cl. 310-62.000.
Koehler, Reinhard: *See—*
Nieling, Andreas; Frank, Wolfgang; Kissel, Holger; Koehler, Reinhard; and Mueller, Werner, 5,700,191, Cl. 454-69.000.
Koelemeijer, Alexandra; Knuchel, Bernard; Letoublon, Laurent; and Olgiati, Stéphane, to Reuge Music USA Ltd. Music box movement with detent stop. 5,700,963, Cl. 84-95.100.
Koelling, Hartmut: *See—*
Klatt, Bruno; Horx, Manfred; Koelling, Hartmut; Berndt, Karlheinz; Krueger, Gerhard; Kuenne, Hans-Joachim; Moerl, Lothar; and Backhaus, Lothar, 5,700,572, Cl. 428-357.000.
Koerber, Paul Donald; and Neubauer, Ronald Jay, to Unisys Corporation. Method for locating a versioned object within a version tree depicting a history of system data and processes for an enterprise. 5,701,472, Cl. 395-619.000.
Koes, Thomas A.: *See—*
Rath, James; Tran, William Luong-Gia; Flynn, Kathy M.; Tara, Vinni Ming; Koes, Thomas A.; and Nizzo, Vincent J., 5,700,607, Cl. 430-15.000.
Koga, Hiromi, to Rohm Co., Ltd. Wire breakage detecting method. 5,701,362, Cl. 382-149.000.
Koganei, Akio: *See—*

Takatsu, Kazumasa; Kurokawa, Takashi; Echizen, Hiroshi; Koganei, Akio; Sugiyama, Shuichiro; and Adachi, Toshio, 5,700,326, Cl. 118-723.0MW.
Kohler Co.: *See—*
Steinhardt, Michael D.; Balan, Isadore; and Sieth, Kenneth J., 5,701,388, Cl. 392-471.000.
Kohler, Karl, to Jefferson Smurfit Corporation. Carton flap retention arrangement. 5,699,958, Cl. 229-120.370.
Kohno, Takeshi: *See—*
Yamada, Masakatsu; Yokoyama, Minoru; and Kohno, Takeshi, 5,701,547, Cl. 399-1.000.
Kohrs, Douglas W.: *See—*
Kuslich, Stephen D.; and Kohrs, Douglas W., 5,700,291, Cl. 623-17.000.
Koike, Atsuyoshi: *See—*
Ikeda, Shuji; Meguro, Satoshi; Hashiba, Soichiro; Kuramoto, Isamu; Koike, Atsuyoshi; Sasaki, Katsuro; Ishibashi, Koichiro; Yamanaka, Toshiaki; Hashimoto, Naotaka; Moriwaki, Nobuyuki; Takahashi, Shigeru; Hiraishi, Atsushi; Kobayashi, Yutaka; and Yukutake, Seigou, 5,700,704, Cl. 437-52.000.
Meguro, Satoshi; Uchibori, Kiyofumi; Suzuki, Norio; Motoyoshi, Makoto; Koike, Atsuyoshi; Yamanaka, Toshiaki; Sakai, Yoshio; Kaga, Toru; Hashimoto, Naotaka; Hashimoto, Takashi; Honjou, Shigeru; and Minato, Osamu, 5,700,705, Cl. 437-52.000.
Koike, Masayoshi: *See—*
Yamazaki, Shiro; Shibata, Naoki; and Koike, Masayoshi, 5,700,713, Cl. 437-129.000.
Koishi, Musubu: *See—*
Yasukawa, Manabu; Horiguchi, Chiyoharu; and Koishi, Musubu, 5,700,084, Cl. 362-275.000.
Koito Manufacturing Co., Ltd.: *See—*
Okuda, Tadayuki, 5,700,080, Cl. 362-80.000.
Koizumi, Masumi: *See—*
Ogihara, Mitsuhiko; Nakamura, Yukio; Koizumi, Masumi; and Taninaka, Masumi, 5,700,714, Cl. 437-167.000.
Kojima, Akio: *See—*
Kawahara, Megumi; Yamada, Ikuko; Shoshi, Masayuki; and Kojima, Akio, 5,700,614, Cl. 430-59.000.
Kojima, Hisayoshi, to Canon Kabushiki Kaisha. Developing apparatus for preventing developer from leaking from a developer container. 5,701,558, Cl. 399-103.000.
Kojima, Katsura: *See—*
Fukuda, Yoshiyuki; Kojima, Katsura; and Sugiyama, Tadashi, 5,701,563, Cl. 399-284.000.
Kojima, Yasukazu: *See—*
Yamada, Hisato; Hirano, Mitsuhisa; and Kojima, Yasukazu, 5,699,749, Cl. 114-270.000.
Kojo, Hitomi: *See—*
Takechi, Kenjiro; Ishigaki, Yasuhiro; and Kojo, Hitomi, 5,700,210, Cl. 473-535.000.
Koksbang, Rene: *See—*
Shi, Hang; Barker, Jeremy; and Koksbang, Rene, 5,700,298, Cl. 29-623.100.
Kokubo, Hiroyasu; and Minemura, Katsuyoshi, to Shin-Etsu Chemical Co., Ltd. Base for coating solid enteric pharmaceutical preparations. 5,700,929, Cl. 536-63.000.
Kokubo, Toshiyuki: *See—*
Kanda, Yuji; Kokubo, Toshiyuki; Sato, Yufu; Sasaki, Toshio; Shiraishi, Hiroyuki; and Shigematsu, Yuji, 5,700,895, Cl. 526-348.000.
Kokura, Makoto; Akimoto, Koji; and Urihara, Kazuhiro, to Asahi Denka Kogyo Kabushiki Kaisha. Urethane modified epoxy resin from epoxy phosphate and isocyanate prepolymer. 5,700,884, Cl. 525-528.000.
Kokusai Denshin Denwa Kabushiki Kaisha: *See—*
Suda, Minoru, 5,701,339, Cl. 379-88.000.
Kolbenschlag, Stefan: *See—*
Kemmler, Lothar; and Kolbenschlag, Stefan, 5,699,824, Cl. 137-85.000.
Kolcun, Joseph F.; Janisiewicz, Stanley W.; and Gieskes, Koenraad A., to Universal Instruments Corporation. Dispenser and method for dispensing viscous fluids. 5,699,934, Cl. 222-1.000.
Kollin, Joel S.; Johnston, Richard S.; and Melville, Charles D., to University of Washington. Virtual retinal display with expanded exit pupil. 5,701,132, Cl. 345-8.000.
Koltze, Karl; Heinrich, Hans-Jürgen; Roland, Volker; and Voidel, Peter, to W. Schlafhorst AG & Co. Pot spinning machine. 5,699,658, Cl. 57-76.000.
Komatsu Electronic Metals Co., Ltd.: *See—*
Izunome, Koji; Kawanishi, Souroku; Togawa, Shinji; Ikari, Atsushi; Sasaki, Hitoshi; and Kimura, Shigeyuki, 5,700,320, Cl. 117-19.000.
Niikura, Keishi, 5,700,321, Cl. 117-19.000.
Komatsu, Toru: *See—*
Endo, Isao; Komatsu, Toru; Sato, Yotaro; Nomori, Hiroyuki; Shigeta, Kunio; and Onodera, Masahiro, 5,701,553, Cl. 399-55.000.
Komatsu, Toshiyuki: *See—*
Yamamoto, Keisuke; and Komatsu, Toshiyuki, 5,700,443, Cl. 423-647.700.
Komatsubara, Kenichi: *See—*
Lee, Shy-Fuh; Nishizaka, Takashi; and Komatsubara, Kenichi, 5,700,762, Cl. 504-292.000.
Komiya, Kazuko: *See—*
Takenishi, Soichiro; Suzuki, Osamu; Yokomizo, Hirohiko; Ichihara, Tatsuo; Masuda, Gen; Nakajima, Namiko; and Komiya, Kazuko, 5,700,935, Cl. 544-139.000.
Komoda, Motoyoshi; and Murata, Yukio, to NEC Corporation. Telephone mouthpiece for preventing wind noises and method for reducing wind noises input thereto. 5,701,354, Cl. 381-157.000.
Komuro, Kiyoto: *See—*
Kobayashi, Yoichi; and Komuro, Kiyoto, 5,700,099, Cl. 400-625.000.
Kondo, Akio: *See—*
Matsunaga, Osamu; and Kondo, Akio, 5,700,419, Cl. 264-656.000.
Kondo, Syunichi; and Fujita, Kazuo, to Fuji Photo Film Co., Ltd. Photopolymerizable composition containing a sensitizing dye and a titanocene compound. 5,700,849, Cl. 522-16.000.
Kondou, Yasuhiro: *See—*
Matsuura, Sadahiro; Satou, Shigeru; Kondou, Yasuhiro; and Igarashi, Yoshiaki, 5,701,066, Cl. 318-808.000.
Koneru, Sudheer: *See—*
Whitney, Alan; Neeman, Yuval; Koneru, Sudheer; Shah, Milan; Cook, Peter J.; and Miller, Arnold S., 5,701,462, Cl. 395-610.000.
Kong, Lipu: *See—*
Korthuis, Ronald J.; Kong, Lipu; and Keefer, Larry K., 5,700,830, Cl. 514-426.000.
Konica Corporation: *See—*
Endo, Isao; Komatsu, Toru; Sato, Yotaro; Nomori, Hiroyuki; Shigeta, Kunio; and Onodera, Masahiro, 5,701,553, Cl. 399-55.000.
Ichikawa, Atsuko; Honda, Satoshi; Katoh, Takayuki; and Ishisaka, Akira, 5,701,377, Cl. 385-124.000.
Ueda, Yutaka; Okauchi, Ken; and Koboshi, Shigeharu, 5,701,541, Cl. [illegible].
Waketa, Yuko; and Mori, Nobuyoshi, 5,701,207, Cl. 359-717.000.
Konrad, Gregory F.: *See—*
Nonweiler, Mark A.; Konrad, Gregory F.; and Wiatrowski, Dennis A., 5,700,522, Cl. 427-388.400.
Kontas, Veijo: *See—*
Pikkarainen, Juha; and Kontas, Veijo, 5,701,106, Cl. 332-100.000.
Kopchick, John Joseph: *See—*
Prieto, Pedro Antonio; Smith, David Fletcher; Cummings, Richard Dale; Kopchick, John Joseph; Mukerji, Pradip; Moremen, Kelley Wilson; and Pierce, James Michael, 5,700,671, Cl. 435-172.300.
Kördel, Werner: *See—*
Hund, Kerstin; Klein, Werner; Kördel, Werner; Görtz, Theo; and Schwarzer, Norbert, 5,700,109, Cl. 405-128.000.
Korea Advanced Institute of Science and Technology: *See—*
Lee, Jai-Young; Lee, Hwan-Cheol; Lee, Jon-Ha; Lee, Han-Ho; and Kim, Dong-Myung, 5,701,078, Cl. 324-430.000.
Korea Institute of Energy Research: *See—*
Park, Young Jae; Park, San Il; Choi, Kyoung Bin; Ha, Young Jin; Park, Ki Ho; Ko, Chang Bog; and Kim, Jeong Gun, 5,699,852, Cl. 165-76.000.
Korea Institute of Science and Technology: *See—*
Lee, Wook-Seong; Baik, Young-Joon; and Eun, Kwang Yong, 5,700,518, Cl. 427-249.000.
Korea Telecommunication Authority: *See—*
Jeon, Byung Chun; Do, Mi Sun; Park, Chun Kwan; Oh, Chang Whan; and Kim, Young Sun, 5,701,300, Cl. 370-392.000.
Youn, Myung Joong; Moon, Gun Woo; and Kim, Marn Go, 5,701,243, Cl. 363-89.000.
Koriyama, Hiroshi, to NEC Corporation. Magnetic disk drive. 5,701,220, Cl. 360-106.000.
Korney, Arthur F., Jr.; Sexton, Earl H., III; and Young, Winnie, to Crane Plastics Company Limited Partnership. Fluoropolymer/terpolymer composite. 5,700,578, Cl. 428-421.000.
Korpi, John G. Quick tightening fastener. 5,700,122, Cl. 411-551.000.
Korsmeyer, Stanley J., to Washington University. Cell death regulator. 5,700,638, Cl. 435-6.000.
Korsunsky, Iosif; Grabbe, Dimitry; and Schroepfer, Richard C., to Whitaker Corporation, The. Adjustable height sealed electrical connector. 5,700,151, Cl. 439-74.000.
Korthuis, Ronald J.; Kong, Lipu; and Keefer, Larry K., to United States of America, Health and Human Services. Use of nitric oxide-releasing agents for reducing metastasis risk. 5,700,830, Cl. 514-426.000.
Kosaka, Toru: *See—*
Hiroshima, Koichi; Nishimura, Katsuhiko; Kosaka, Toru; and Yoda, Yasuo, 5,701,568, Cl. 399-302.000.
Koshi, Yutaka; Kimura, Shunichi; and Kamizawa, Koh, to Fuji Xerox Co., LTD. Image data coding system for controlling amounts of code data for character image and natural image regions. 5,701,367, Cl. 382-239.000.
Kosik, Franz; and Wörner, Günter, to Mercedes-Benz AG. Automatic clutch control. 5,700,227, Cl. 477-171.000.
Koslow, Evan E., to KX Industries, L.P. Water treatment cartridge and base. 5,700,371, Cl. 210-232.000.
Kostizak, David A.; and Zavislan, James M. Spectrophotometer mouse. 5,701,175, Cl. 356-326.000.
Kotani, Kozo; Kawakita, Toshio; Sakaya, Taiichi; and Kuroda, Toshiya, to Sumitomo Chemical Company, Limited. Gas barrier resin composition and its film and process for producing the same. 5,700,560, Cl. 428-325.000.
Kotobuki & Co., Ltd.: *See—*
Kageyama, Shuhei; Kageyama, Toshihiko; Nakazato, Youichi; and Mitsuya, Yoshihide, 5,700,101, Cl. 401-52.000.
Kouno, Yoshiaki: *See—*
Kubodera, Noriyuki; and Kouno, Yoshiaki, 5,700,338, Cl. 156-89.000.
Kovacs, Gregory J.: *See—*
Pontes, Fatima M.; Sacripante, Guerino G.; Drappel, Stephan V.; Paine, Anthony J.; and Kovacs, Gregory J., 5,700,316, Cl. 106-31.580.

Kowashi, Eiichi: *See—*
Glew, Andrew F.; Mennemeier, Larry M.; Peleg, Alexander D.; Bistry, David; Mittal, Millind; Dulong, Carole; Kowashi, Eiichi; Eitan, Benny; Lin, Derrick; and Vakkalagadda, Ramamohan R., 5,701,508, Cl. 395-800.000.
Koya, Takashi: *See—*
Katsuyama, Akira; Tomizawa, Kenji; Nagano, Shuichi; and Koya, Takashi, 5,701,385, Cl. 386-106.000.
Koyama, Yasuji; and Ichikawa, Toshio, to Kikkoman Corporation. Mutant uricase, a mutant uricase gene, a novel recombinant DNA, and a process for producing mutant uricase. 5,700,674, Cl. 435-191.000.
Koyanagi, Hiroaki: *See—*
Taniyama, Akira; Morijiri, Makoto; Tanaka, Haruko; Yuito, Isamu; Ashida, Eiji; Koyanagi, Hiroaki; Tanabe, Hideo; and Kobayashi, Tetsuo, 5,701,221, Cl. 360-113.000.
Koyanagi, Satoru: *See—*
Moriya, Yukio; Koyanagi, Satoru; Fujimura, Tetsuya; Nagahama, Masayuki; Yamazaki, Kazuyuki; and Hishiyama, Toru, 5,699,873, Cl. 180-402.000.
Koyano, Yasushi: *See—*
Shigematsu, Masayuki; and Koyano, Yasushi, 5,701,188, Cl. 359-161.000.
Koyo Machine Industries Co., Ltd.: *See—*
Chikamori, Akira; and Yasuhara, Shinji, 5,700,115, Cl. 408-126.000.
Koyo Seiko Co., Ltd.: *See—*
Chikamori, Akira; and Yasuhara, Shinji, 5,700,115, Cl. 408-126.000.
Kramer, Karl-Heinz: *See—*
Weidinger, Marc; and Kramer, Karl-Heinz, 5,701,238, Cl. 363-21.000.
Krämer, Michael: *See—*
Duvinage, Frank; Paule, Markus; Krämer, Michael; Rippert, Nils; and Enderle, Christian, 5,699,765, Cl. 123-315.000.
Kramer, Richard Alan: *See—*
Mayell, Robert James; and Kramer, Richard Alan, 5,701,253, Cl. 364-[illegible].
Kramer, Richard B.: *See—*
Bestgen, Michael J.; Kramer, Richard B.; Moulden, Daniel P.; Barbee, Chris; and Hibbetts, Bryon, 5,699,894, Cl. 198-678.100.
Kraner, Bret M.: *See—*
Bendick, Harry J.; and Kraner, Bret M., 5,700,543, Cl. 428-71.000.
Krewenka, Roland: *See—*
Neumayer, Harald; and Krewenka, Roland, 5,699,686, Cl. 70-283.000.
Krieg, Manfred; Weber, Christa; and Szigeti, Peter, to Roehm GmbH Chemische Fabrik. Transparent plastic pane containing a copolymer of methylmethacrylate and polyfunctional acrylates. 5,700,894, Cl. 526-323.200.
Krieger, Eberhard: *See—*
Scheifele, Horst; Krieger, Eberhard; Heinisch, Ulrich; and Wentsch, Siegfried, 5,699,709, Cl. 83-236.000.
Kriesel, Marshall S., to Science Incorporated. Fluid dispenser with fill adapter. 5,700,244, Cl. 604-132.000.
Krivtsun, Igor U.: *See—*
Dykhno, Igor S.; Krivtsun, Igor U.; and Ignatchenko, Georgi M., 5,700,989, Cl. 219-121.450.
Krone, Volker; Magerstädt, Michael; Walch, Axel; Gröner, Albrecht; and Hoffmann, Dieter, to Hoechst Aktiengesellschaft. Pharmacological composition containing polyelectrolyte complexes in microparticulate form and at least one active agent. 5,700,459, Cl. 424-78.080.
Krounbi, Mohamad Towfik; and Lee, James Hsi-Tang, to International Business Machines Corporation. Simplified method of making vias for merged MR head. 5,700,380, Cl. 216-22.000.
Krueger, Gerhard: *See—*
Klatt, Bruno; Horx, Manfred; Koelling, Hartmut; Berndt, Karlheinz; Krueger, Gerhard; Kuenne, Hans-Joachim; Moerl, Lothar; and Backhauss, Lothar, 5,700,572, Cl. 428-357.000.
KTR Kupplungstechnik GmbH: *See—*
Banemann, Reiner; Tenfelde, Bernd; and Wibbeling, Reinhard, 5,700,196, Cl. 464-36.000.
Kubat, Danny. Mechanic's tray. 5,699,910, Cl. 206-373.000.
Kubo, Keishi: *See—*
Kutami, Atsushi; Kawamura, Eiichi; and Kubo, Keishi, 5,700,746, Cl. 101-201.000.
Kubo, Masami; Akebi, Yasunobu; and Yamashita, Toshihiro, to Sharp Kabushiki Kaisha. Projection-type liquid crystal display with a liquid crystal panel having a reflection-reducing coating layer. 5,701,165, Cl. 349-5.000.
Kubo, Setsuo, to Kabushiki Kaisha Dymosha. Wire sawing method of reinforced concrete structure and guide pulley apparatus. 5,699,783, Cl. 125-21.000.
Kubodera, Noriyuki; and Kouno, Yoshiaki, to Murata Manufacturing Co., Ltd. Method of manufacturing resistor integrated in sintered body and method of manufacturing multilayer ceramic electronic component. 5,700,338, Cl. 156-89.000.
Kubota, Atsushi: *See—*
Araki, Ryuji; Kubota, Atsushi; Sasaki, Shinichi; and Miura, Koji, 5,701,562, Cl. 399-265.000.
Kubota Corporation: *See—*
Okumura, Yoshinobu; and Yang, Xingbo, 5,700,593, Cl. 428-694.0TS.
Kubota Iron Works Co., Ltd.: *See—*
Yamanaka, Shigeaki, 5,699,689, Cl. 72-68.000.
Kubota, Kazunori: *See—*
Okumura, Hideki; Sakamoto, Kazunori; Kobata, Kiyoshi; and Kubota, Kazunori, 5,701,225, Cl. 360-132.000.
Kuboyama, Kiminasa; Yokoyama, Shoji; Miyakoshi, Yoshinori; Taniguchi, Hiroya; Tsuruta, Kazuhiro; and Goto, Hisashi, to Fuji Electric Co., Ltd. Food material transferring apparatus. 5,699,655, Cl. 53-540.000.
Kucar, Smiljana. Dental hygiene cleaning tool. 5,700,146, Cl. 433-82.000.
Kudo, Shozo: *See—*
Yamauchi, Satoshi; Tamura, Hiroshi; Katooka, Takashi; Tsumura, Naoki; Hikichi, Naoto; Narumi, Chihiro; Ezaki, Takashi; Kudo, Shozo; and Ooguro, Yoshihisa, 5,701,497, Cl. 395-753.000.
Kuehn, Stefan: *See—*
Weber, Werner; Kuehn, Stefan; Kleiner, Michael; and Thewes, Roland, 5,701,037, Cl. 257-777.000.
Kuenne, Hans-Joachim: *See—*
Klatt, Bruno; Horx, Manfred; Koelling, Hartmut; Berndt, Karlheinz; Krueger, Gerhard; Kuenne, Hans-Joachim; Moerl, Lothar; and Backhauss, Lothar, 5,700,572, Cl. 428-357.000.
Kuga, Kaeko, to Rohm Co., Ltd. Display apparatus. 5,701,131, Cl. 345-8.000.
Kugimiya, Koichi: *See—*
Okuyama, Kojiro; Shimoyama, Koji; Kawashima, Syunichiro; and Kugimiya, Koichi, 5,700,745, Cl. 501-134.000.
Kuhlenschmidt, Richard E. Children's computer keyboard. 5,700,097, Cl. 400-487.000.
Kuhlman, Karen G.: *See—*
Goodfellow, Val S.; Marathe, Manoj V.; Whalley, Eric T.; Fitzpatrick, Timothy D.; and Kuhlman, Karen G., 5,700,779, Cl. 514-14.000.
Kujawski, Rick A., to Bundy Corporation. Fluid quick connector. 5,700,040, Cl. 285-319.000.
Kukino, Satoru; Nakai, Tetsuo; Goto, Mitsuhiro; Yoshioka, Takashi; and Setoyama, Makoto, to Sumitomo Electric Industries, Ltd. Layered film made of ultrafine particles and a hard composite material for tools possessing the film. 5,700,551, Cl. 428-212.000.
Kukta, Józsefné: *See—*
Alexa, József; Buzsnyák, Imre; Glódi, István; Kiss, András; Kukta, Józsefné; Nagy, Béla; Salamon, Péter; Szentpétery, Elemér; Tóth, Zoltán; and Ujhelyi, Tamás, 5,700,957, Cl. 73-861.357.
Kulagowski, Janusz Jozef, to Merck, Sharp & Dohme, Ltd. Octahydronaphthyridine derivatives. 5,700,941, Cl. 546-122.000.
Kulagowski, Janusz Jozef: *See—*
Curtis, Neil Roy; Kulagowski, Janusz Jozef; and Leeson, Paul David, 5,700,802, Cl. 514-253.000.
Leeson, Paul David; Smith, Adrian Leonard; Ridgill, Mark Peter; Baker, Raymond; Curtis, Neil Roy; and Kulagowski, Janusz Jozef, 5,700,809, Cl. 514-300.000.
Kulberg, Kurt: *See—*
Scott, Loren W.; and Kulberg, Kurt, 5,699,962, Cl. 239-73.000.
Kulicke and Soffa Investments, Inc.: *See—*
Safabakhsh, Ali Reza, 5,699,953, Cl. 228-110.100.
Kumagai, Henry Y.: *See—*
Hower, Glenn Roy; and Kumagai, Henry Y., 5,700,725, Cl. 437-225.000.
Kumagai, Tatsuya; Kajioka, Hiroshi; Kobayashi, Osamu; Akiyama, Munehiro; Oho, Shigeru; and Sonobe, Hisao, to Hitachi Cable, Ltd.; and Hitachi, Ltd. Method for detecting fault of optical fiber gyro and apparatus for diagnosing fault of the same. 5,701,177, Cl. 356-350.000.
Kumaki, Satoshi: *See—*
Masuda, Shinichi; Kumaki, Satoshi; and Matsuura, Yoshinori, 5,701,267, Cl. 365-201.000.
Kumar, Vijay Pochampalli: *See—*
Chiussi, Fabio Massimo; Kumar, Vijay Pochampalli; Tryfonas, Christos; and Sudhakar, Mudda, 5,701,292, Cl. 370-232.000.
Kumiai Chemical Industrial Co. Ltd.: *See—*
Ikeda, Atsuhiko; Ozaki, Masami; Honami, Reijiro; Yumita, Takashi; Yano, Hiroyuki; Nakano, Yuki; Kurihara, Yutaka; and Hirano, Tadayoshi, 5,700,824, Cl. 514-383.000.
Kumm, Lance: *See—*
Acosta, George M.; and Kumm, Lance, 5,700,262, Cl. 606-48.000.
Kundermann, Wolfgang, to Fichtel & Sachs AG. Hydrokinetic torque converter with an impeller clutch and a bridge coupling. 5,699,887, Cl. 192-3.280.
Kunkel, Joseph D.: *See—*
Hakala, Kevin E.; Kunkel, Joseph D.; and Johnson, Glenn L., 5,699,677, Cl. 62-291.000.
Kuo, Hung Chin. Multi-purpose battery for a mobile telephone. 5,701,341, Cl. 379-431.000.
Kuo, James R., to National Semiconductor Corporation. High-speed transmission line receiver with wide range of common mode compensation. 5,701,102, Cl. 330-253.000.
Kuo, Lawrence Lu; Leung, Roger Yiming; and Williams, Kenneth Samuel, to BetzDearborn Inc. Water-soluble cationic copolymers and their use as flocculants and drainage aids. 5,700,893, Cl. 526-307.100.
Kuo, Ta-Chi; and Lin, Jyh-Kuang, to United Microelectronics Corporation. Method of forming an MNOS/MONOS by employing large tilt angle ion implantation underneath the field oxide. 5,700,728, Cl. 438-216.000.
Kuramoto, Isamu: *See—*
Ikeda, Shuji; Meguro, Satoshi; Hashiba, Soichiro; Kuramoto, Isamu; Koike, Atsuyoshi; Sasaki, Katsuro; Ishibashi, Koichiro; Yamanaka, Toshiaki; Hashimoto, Naotaka; Moriwaki, Nobuyuki; Takahashi, Shigeru; Hiraishi, Atsushi; Kobayashi, Yutaka; and Yukutake, Seigou, 5,700,704, Cl. 437-52.000.
Kurashima, Hideo: *See—*
Kobayashi, Akira; Kurashima, Hideo; Sato, Harumi; Fujita, Satoshi; and Imazu, Katsuhiro, 5,700,529, Cl. 428-35.800.
Kurata, Tetsuji: *See—*

Akiyama, Yuji; Hirabayashi, Hiromitsu; Nagoshi, Shigeyasu; Arai, Atsushi; Kurata, Tetsuji; Sugimoto, Hitoshi; and Matsubara, Miyuki, 5,701,146, Cl. 347-26.000.
Kurbayashi, Yutaka; Shirota, Katsuhiro; and Takahashi, Katsuhiko, to Canon Kabushiki Kaisha. Image forming method, and ink set and ink-jet machinery used therein. 5,700,314, Cl. 106-31.270.
Kuribayashi, Sadatomo, to Kay Seven Co., Ltd. Flexible shaft coupling having a plurality of driving side leaf spring members, a plurality of driven side leaf spring members and one relay member. 5,700,197, Cl. 464-69.000.
Kurihara, Yutaka: *See—*
Ikeda, Atsuhiko; Ozaki, Masami; Honami, Reijiro; Yumita, Takashi; Yano, Hiroyuki; Nakano, Yuki; Kurihara, Yutaka; and Hirano, Tadayoshi, 5,700,824, Cl. 514-383.000.
Kurilenko, Vladimir Iliich: *See—*
Gerasimov, Jury Vasilievich; Grinberg, Jury Moiseevich; Djuzhev, Georgy Andreevich; Kallistov, Anatoly Anatolievich; Kurilenko, Vladimir Iliich; and Rakhovsky, Vadim Izrailovich, 5,701,057, Cl. 315-111.210.
Kurimoto, Ikuo; Kawajiri, Tatsuya; Onodera, Hideo; Tanimoto, Michio; and Aoki, Yukio, to Nippon Shokubai Co. Ltd. Catalyst for production of unsaturated aldehyde and unsaturated carboxylic acid and method for production of unsaturated aldehyde and unsaturated carboxylic acid by the use of the catalyst. 5,700,752, Cl. 502-311.000.
Kurita, Hiroko: *See—*
Maeda, Hirokazu; Furuta, Hitoshi; Takahashi, Taro; Takei, Chiemi; Kurita, Hiroko; and Sato, Yoko, 5,700,397, Cl. 252-312.000.
Kuriyama, Chojiro: *See—*
Nakamura, Shinji; and Kuriyama, Chojiro, 5,699,597, Cl. 29-25.030.
Kuroda, Toshiya: *See—*
Kotani, Kozo; Kawakita, Toshio; Sakaya, Taiichi; and Kuroda, Toshiya, 5,700,560, Cl. 428-325.000.
Kurogi, Garrett Isao; and Swass, Matthew J., to Hughes Electronics. Method of hermetically self-sealing a flip chip. 5,699,611, Cl. 29-840.000.
Kurokawa, Takashi: *See—*
Takatsu, Kazumasa; Kurokawa, Takashi; Echizen, Hiroshi; Koganei, Akio; Sugiyama, Shuichiro; and Adachi, Toshio, 5,700,326, Cl. 118-723.0MW.
Kuroyanagi, Masatoshi: *See—*
Matsumoto, Shuichi; Kuroyanagi, Masatoshi; Toyao, Tetsuya; Murakami, Masashi; and Arakoma, Yukihisa, 5,699,770, Cl. 123-470.000.
Kürten, Heribert; Radtke, Uwe; Taube, Wolfgang; and Vollmar, Horst, to Siemens Aktiengesellschaft. Steam generating power station, process for operating the same, and interlinking network and process for its operation.. 5,699,666, Cl. 60-652.000.
Kurtz, Robert J.; and Fuller, William D., to Bioresearch, Inc. Specific eatable taste modifiers. 5,700,792, Cl. 514-171.000.
Kurusu, Akira: *See—*
Shimasaki, Yuuji; Kanbe, Hideyuki; and Kurusu, Akira, 5,700,946, Cl. 348-231.000.
Kusaka, Yosuke; Uchiyama, Shigeyuki; Yamano, Shozo; and Narisawa, Tsutomu, to Nikon Corporation. Focus detection device and focus detection method. 5,701,524, Cl. 396-123.000.
Kuslich, Stephen D.; and Kohrs, Douglas W., to Spine-Tech, Inc. Laparoscopic spinal stabilization method. 5,700,291, Cl. 623-17.000.
Kusserow, Peter: *See—*
Woerner, Bernhard; Haug, Kurt; Fabry, Thomas; Kusserow, Peter; and Jenner, Bert, 5,700,079, Cl. 362-80.000.
Küsters, Karl-Heinz: *See—*
Kellner, Walter-Ulrich; Küsters, Karl-Heinz; Müller, Wolfgang; and Stelz, Franz-Xaver, 5,701,022, Cl. 257-300.000.
Kutami, Atsushi; Kawamura, Eiichi; and Kubo, Keishi, to Ricoh Company, Ltd. Reversible thermosensitive recording medium. 5,700,746, Cl. 501-101.000.
Kuwata, Takashi: *See—*
Sekiya, Harukazu; Saito, Jun; Isoda, Yuzo; Uchida, Yasuhiro; Izumi, Makoto; and Kuwata, Takashi, 5,700,006, Cl. 271-241.000.
Kux, Michael: *See—*
Huver, Thomas; Friese, Carsten; Emmerling, Winfried; Kux, Michael; and Motzkat, Kerstin, 5,700,891, Cl. 526-301.000.
Kuznets, Sam A.; and Mortellaro, John, Jr., to Borg-Warner Automotive, Inc. Hydraulic tensioner with locking mechanism. 5,700,214, Cl. 474-110.000.
KX Industries, L.P.: *See—*
Koslow, Evan E., 5,700,371, Cl. 210-232.000.
Kyoboshi Co., Ltd.: *See—*
Isaji, Kazutoshi, 5,699,969, Cl. 241-24.120.
Kyogoku, Makoto; Iwakuni, Hideharu; and Takami, Akihide, to Mazda Motor Corporation. Exhaust gas cleaning catalyst complex and method for producing the same. 5,700,747, Cl. 502-66.000.
Kyowa Hakko Kogyo Co., Ltd.: *See—*
Katsumata, Ryoichi; and Takano, Yutaka, 5,700,661, Cl. 435-69.100.
Morimoto, Kiyoshi; Watanabe, Yasushi; Sanada, Yoshika; Miwa, Teiichi; and Masada, Tomoaki, 5,700,492, Cl. 425-100.000.
Kyowa Medex Co., Ltd.: *See—*
Tadano, Toshio; Miike, Akira; and Umemoto, Jun, 5,700,652, Cl. 435-14.000.
L&P Property Management Company: *See—*
Wells, Thomas J., 5,699,999, Cl. 267-103.000.
La Calhene: *See—*
Rohard, Michel; and Glachet, Charles, 5,700,043, Cl. 292-256.600.
La Jolla Cancer Research Foundation: *See—*
Pierschbacher, Michael D.; Ruoslahti, Erkki I.; and Dedhar, Shoukat, 5,700,681, Cl. 435-240.210.
Ruoslahti, Erkki I., 5,700,908, Cl. 530-324.000.
Laak, Kai van: *See—*
Mittendorf, Joachim; Fey, Peter; Junge, Bodo; Kaulen, Johannes; Laak, Kai van; Meier, Heinrich; and Schohe-Loop, Rudolf, 5,700,948, Cl. 548-531.000.
Laflamme, Claude: *See—*
Adoul, Jean-Pierre; and Laflamme, Claude, 5,701,392, Cl. 395-2.280.
LaFleur, Bernard, to SAGEM SA. Shut-off valve unit for a circuit for injecting air in the exhaust system of an internal combustion engine. 5,699,664, Cl. 60-307.000.
Lagarde, Eric: *See—*
Villette, Jean De Chevron; Perache, Jean-Michel; and Lagarde, Eric, 5,699,847, Cl. 160-168.10P.
Lagarde, Konrad Charles: *See—*
Rogers, Richard Michael; and Lagarde, Konrad Charles, 5,701,451, Cl. 395-600.000.
Laih, Lih-Wen: *See—*
Liu, Wen-Chau; and Laih, Lih-Wen, 5,701,020, Cl. 257-192.000.
Laiho, Erkki; and Sainio, Markku, to Borealis Polymers Oy. Laminate and production method thereof. 5,700,586, Cl. 428-507.000.
Laird, Mark: *See—*
Glier, Michael T.; Cole, John; and Laird, Mark, 5,701,398, Cl. 395-27.000.
Läller, Klaus-Jürgen: *See—*
Bergmann, Konrad; Fait, Claudio; and Läller, Klaus-Jürgen, 5,699,964, Cl. 239-106.000.
Lam, Raymond K. F., to Sony Corporation; and Materials Research Corp. Method for producing ultra high purity titanium films. 5,700,519, Cl. 427-253.000.
LaManna, Gina M.: *See—*
Wieloch, Francis J.; LaManna, Gina M.; Jackson, Frank J., Jr.; Smallman, Gary W.; Kemp, Kenneth A.; Speakman, Edward J.; Grabowski, Edward F.; Street, Terry L.; Wisniewski, Carl A.; and Czerniawski, John A., 5,699,584, Cl. 15-256.520.
LaMarra, Frank. Wireless remote channel-MIDI switching device. 5,700,966, Cl. 84-645.000.
Lambert, Claude: *See—*
Guerlet, Jean-Paul; and Lambert, Claude, 5,699,680, Cl. 66-202.000.
Lambert, Nicolaas; and Van Gorkom, Gerardus G. P., to U.S. Philips Corporation. Picture display device with uniformity correction of electron supply. 5,701,134, Cl. 345-74.000.
Lamm, Richard M.; and Lefebvre, Ronald, to Poborsky, Gary A. Pneumatic blow-off system and method of operation thereof. 5,700,112, Cl. 406-93.000.
Lammers, Reiner: *See—*
Hirth, Klaus Peter; Schwartz, Donna Pruess; Mann, Elaina; Shawver, Laura Kay; Keri, Gyorgi; Szekely, Istvan; Bajor, Tamas; Haimichael, Janis; Orfi, Laszlo; Levitzki, Alex; Gazit, Aviv; Ullrich, Axel; Lammers, Reiner; Kabbinavar, Fairooz F.; Slamon, Dennis; and Tang, Peng Cho, 5,700,822, Cl. 514-380.000.
Hirth, Klaus Peter; Schwartz, Donna Pruess; Mann, Elaina; Shawver, Laura Kay; Kéri, György; Székely, István; Bajor, Tamás; Haimichael, Janis; Orfi, László; Levitzki, Alex; Gazit, Aviv; Ullrich, Axel; and Lammers, Reiner, 5,700,823, Cl. 514-380.000.
Lampes, Elias Harry; Jacobson, Craig Robert; and Manning, Robert Francis, to General Electric Company. Turbine blade having opposing wall turbulators. 5,700,132, Cl. 416-97.00R.
Lane, Samuel L.: *See—*
Wolters, Henricus F. W.; Lane, Samuel L.; Buijs, Wim; Haasen, Nicolaas F.; and Herkes, Frank E., 5,700,934, Cl. 540-538.000.
Lane, Wendell C., Jr., to TRW Vehicle Safety Systems Inc. Vehicle safety apparatus with selective energy management. 5,700,034, Cl. 280-805.000.
Lane, William F.; and Williams, Robert C., to Bailey Marketing Group, Inc. Beverage cup lid having perpheral locking means for drinking opening closure member. 5,699,927, Cl. 220-254.000.
Lang, Ulf Otto, to Lear Corporation. Vehicle seat assembly including integral child restraint seat. 5,700,054, Cl. 297-238.000.
Langenstück, Holger, to Beiersdorf Aktiengesellschaft. Pack for knives and the like. 5,699,907, Cl. 206-349.000.
Langer, Robert S.: *See—*
Berde, Charles B.; and Langer, Robert S., 5,700,485, Cl. 424-501.000.
Langström, Bengt: *See—*
Watanabe, Yasuyoshi; Suzuki, Masaaki; Hazato, Atsuo; and Langström, Bengt, 5,700,833, Cl. 514-510.000.
Lappe, Bernhard: *See—*
Schmidt, Peter; Heise, Wolfgang; and Lappe, Bernhard, 5,699,741, Cl. 101-485.000.
Larsen, Gary R.: *See—*
Corrado, Frank C.; Fischer, James W.; Larsen, Gary R.; and Sweet, Ronald W., 5,699,738, Cl. 101-425.000.
Larsen, James R.: *See—*
Larsen, John T.; and Larsen, James R., 5,701,358, Cl. 381-202.000.
Larsen, John T.; and Larsen, James R. Isobaric loudspeaker. 5,701,358, Cl. 381-202.000.
Larson, Glen M.; and Mayberry, Terry R., to Telect, Inc. Fiber optic module for high density supply of patching and splicing. 5,701,380, Cl. 385-134.000.
Larson, John E.: *See—*

Moriarty, Michael P.; and Larson, John E., 5,701,433, Cl. 395-481.000.
Larson, Richard J., Jr., to Markem Corporation. Ink for ink jet printing. 5,700,313, Cl. 106-22.00A.
Latham, Christopher John: *See—*
Collins, Mark Anthony David; Chicarelli-Robinson, Maria Ines; Bryans, Justin Stephen; Brocchini, Stephen James; Latham, Christopher John; and Shaw, John Richardson, 5,700,804, Cl. 514-255.000.
Lathrop, Alan, to Digital Equipment Corp. Information transfer arrangement for distributed computer system. 5,701,427, Cl. 395-200.010.
Latshaw, Ricky J., to Purdy Neat Things Co., Inc. Luggage having supplementary tow handle for wheeled luggage and method of towing combination of same. 5,699,886, Cl. 190-108.000.
Lau, Liming: *See—*
Littmann, Laszlo; Lau, Liming; and Amirana, Omar, 5,699,796, Cl. 128-642.000.
Laurus Medical Corporation: *See—*
Gordon, Norman S.; Cooper, Robert P.; and Quick, Richard L., 5,700,272, Cl. 606-144.000.
Lavallée, Pierre: *See—*
Beaulieu, Pierre Louis; Déziel, Robert; and Lavallée, Pierre, 5,700,780, Cl. 514-17.000.
Lawlor, Patrick; and Coriale, Matthew C., to Williams Electronics Games, Inc. Amusement device integrating games of skill and chance. 5,700,008, Cl. 273-118.00A.
Lawrence Paper Company: *See—*
Creaden, David E., 5,699,710, Cl. 83-332.000.
Laws, William Robert; and Reed, Geoffrey Ronald, to Encomech Engineering Services Ltd. Heat shields. 5,699,694, Cl. 72-200.000.
Lazo, John S.; Rice, Robert L.; Cunningham, April; and Wipf, Peter, to University of Pittsburgh. Phosphatase inhibitors and methods of use thereof. 5,700,821, Cl. 514-374.000.
Lazzari, Angelo: *See—*
Zulian, Ferruccio; Ramolini, Angelo; Bagnoli, Carlo; and Lazzari, Angelo, 5,701,413, Cl. 395-200.020.
Le Carbone Lorraine: *See—*
Kammerer, Eric; Biering, Lothar; Grohs, Erhard; Groht, Klaus; Reynvaan, Conrad; Siegmund, Horst; Spangenberg, Jorgen; and Uecker, Arwed, 5,701,046, Cl. 310-251.000.
Leach, James Lee: *See—*
Masor, Marc Leif; Leach, James Lee; Molitor, Bruce Edward; Benson, John Durand; and Baxter, Jeffrey H., 5,700,590, Cl. 426-656.000.
Leafstone, Harley W.: *See—*
Paugh, Edward C.; Leafstone, Harley W.; and Hortick, Nicholas P., 5,699,975, Cl. 242-371.000.
Lear Corporation: *See—*
Balagurumurthy, Ravichandran; and Kinsey, Jon W., 5,700,058, Cl. 297-440.150.
Davidson, Russell K.; Heyer, Michael H. J.; and Masters, James C., 5,700,055, Cl. 297-378.120.
Lang, Ulf Otto, 5,700,054, Cl. 297-238.000.
Leask, James M.: *See—*
Guillen, Juan; and Leask, James M., 5,701,485, Cl. 395-683.000.
Leatherbury, Colin C.; and Kerr, Donavan O., to C.C. Leatherbury, Inc. Mobile cart. 5,700,021, Cl. 280-47.350.
Lechman, John N., to Nova Solutions, Inc. Adjustable monitor support for flat monitors. 5,699,744, Cl. 108-109.000.
Le Cras, Frédéric: *See—*
Bloch, Didier; Le Cras, Frédéric; and Strobel, Pierre, 5,700,442, Cl. 423-599.000.
Ledger, Alan S.: *See—*
Oury, Robert F.; Dingeldein, Mark S.; Ledger, Alan S.; and Gallione, Joseph P., 5,699,878, Cl. 187-234.000.
Lee, Byung-hun, to Samsung Electronics Co., Ltd. Semiconductor device having X-ray lithographic mask and method for manufacturing the same. 5,700,603, Cl. 430-5.000.
Lee, Chang-Yong; Kim, Joo-Hwan; and Ryu, Soo-Sun, to SKC Limited. Method for manufacturing a replica stamper. 5,699,848, Cl. 164-46.000.
Lee, Cheng-ho. Adjusting means for use in a staple gun. 5,699,948, Cl. 227-10.000.
Lee, Chun-Te, to Super Group Co., Ltd. Electrical connector for interconnecting female and male contacts of cables. 5,700,160, Cl. 439-578.000.
Lee, Daniel Hao-Tien: *See—*
Lin, John C. H.; Lee, Daniel Hao-Tien; and Cherng, Meng-Jaw, 5,700,731, Cl. 438-381.000.
Lee, Dong-Jin, to Samsung Electronics Co., Ltd. Disk rotation control apparatus and method. 5,701,284, Cl. 369-50.000.
Lee, Frank D.: *See—*
Abrams, John S.; Chretien, Isabelle; Lee, Frank D.; and Pearce, Michael K., 5,700,915, Cl. 530-413.000.
Lee, Geum Ock; and Yang, Gyun Seog, to Hyundai Electronics Industries Co., Ltd. Tab coefficient updating device of finite impulse-responding adaptive digital filter. 5,701,262, Cl. 364-724.190.
Lee, Hae-Don; and Shin, Jong-Sub, to Samsung Electronics Co., Ltd. Induction cooker with power switching control. 5,700,996, Cl. 219-626.000.
Lee, Han-Ho: *See—*
Lee, Jai-Young; Lee, Hwan-Cheol; Lee, Jon-Ha; Lee, Han-Ho; and Kim, Dong-Myung, 5,701,078, Cl. 324-430.000.
Lee, Hsiao-Lun Bob, to Chartered Semiconductor Manufacturing Pte Ltd. Method of manufacturing SRAM cell structure having a tunnel oxide capacitor. 5,700,707, Cl. 437-52.000.
Lee, Hwan-Cheol: *See—*
Lee, Jai-Young; Lee, Hwan-Cheol; Lee, Jon-Ha; Lee, Han-Ho; and Kim, Dong-Myung, 5,701,078, Cl. 324-430.000.
Lee, Hyosong; and Ehnström, Lars, to Vivex AB. Method and apparatus for gravitational separation of fine articles from a liquid. 5,700,378, Cl. 210-771.000.
Lee, Ivan, to Avery Dennison Corporation. Acrylic emulsion coatings for formed articles. 5,700,585, Cl. 428-500.000.
Lee, Jai-Young; Lee, Hwan-Cheol; Lee, Jon-Ha; Lee, Han-Ho; and Kim, Dong-Myung, to Korea Advanced Institute of Science and Technology. Method of measuring residual capacity of a Ni/MH cell. 5,701,078, Cl. 324-430.000.
Lee, James Hsi-Tang: *See—*
Krounbi, Mohamad Towfik; and Lee, James Hsi-Tang, 5,700,380, Cl. 216-22.000.
Lee, Jian-Huei; Yen, Ying-Tzu; and Peng, Ping-Hui, to Taiwan Semiconductor Manufacturing Company, Ltd. Masked-gate MOS S/D implantation. 5,700,729, Cl. 438-230.000.
Lee, Jong-jin: *See—*
Park, Won-mo; and Lee, Jong-jin, 5,700,709, Cl. 437-60.000.
Lee, Jon-Ha: *See—*
Lee, Jai-Young; Lee, Hwan-Cheol; Lee, Jon-Ha; Lee, Han-Ho; and Kim, Dong-Myung, 5,701,078, Cl. 324-430.000.
Lee, Joon-bae: *See—*
Park, Chang-won; Yang, Jun-mo; and Lee, Joon-bae, 5,701,054, Cl. 313-467.000.
Lee, Jun Seok; Hur, Hun; and Song, Young Jin, to LG Semicon Co., Ltd. Method for forming multi-layer resist pattern. 5,700,626, Cl. 430-296.000.
Lee, Jung-Yeal: *See—*
Han, Chul-Hi; Kim, Choong-Ki; Lee, Jung-Yeal; and Oh, Kil-Hwan, 5,700,699, Cl. 437-21.000.
Lee, Kwang Hyuk; Choi, Seung Suh; and Yoon, Myeong Sik, to Cheil Jedang Co. Process for preparing cephem derivative. 5,700,932, Cl. 540-223.000.
Lee, Kyu-chan; Lee, Sang-bo; and Sim, Jai-hoon, to Samsung Electronics Co., Ltd. Sense amplifier for integrated circuit memory devices having boosted sense and current drive capability and methods of operating same. 5,701,268, Cl. 365-205.000.
Lee, Raphael C.; and Huang, David, to Massachusetts Institute of Technology. Method for producing oriented connective tissue cells. 5,700,688, Cl. 435-287.100.
Lee, Roger R.; and Dennison, Charles H., to Micron Technology, Inc. Semiconductor processing method of providing dopant impurity into a semiconductor substrate. 5,700,730, Cl. 438-298.000.
Lee, Rule. Tape measure. 5,699,623, Cl. 33-758.000.
Lee, Sang-bo: *See—*
Lee, Kyu-chan; Lee, Sang-bo; and Sim, Jai-hoon, 5,701,268, Cl. 365-205.000.
Lee, S. Daniel; Nguyen, Trung D.; and Czerwinski, Mary P., to Inference Corporation. Integration of case-based search engine into help database. 5,701,399, Cl. 395-51.000.
Lee, Seung-hun, to Samsung Electronics Co., Ltd. Integrated circuit memory devices including banks of memory blocks. 5,701,271, Cl. 365-230.020.
Lee, Shy-Fuh; Nishizaka, Takashi; and Komatsubara, Kenichi, to Sandoz Ltd. Substituted benzoyl (hetero) cyclic diones. 5,700,762, Cl. 504-292.000.
Lee, Steven G.; Iehl, Brian D.; Manya, Omeroon; Schellinger, Michael J.; and D'Avello, Robert F., to Motorola, Inc. Method for adjusting reference frequencies in a communication system. 5,701,589, Cl. 455-56.100.
Lee, Un Koo, to Hyundai Motor Company. Vehicle suspension system for a steerable wheel. 5,700,025, Cl. 280-661.000.
Lee, Wook-Seong; Baik, Young-Joon; and Eun, Kwang Yong, to Korea Institute of Science and Technology. Fabrication method for diamond-coated cemented carbide cutting tool. 5,700,518, Cl. 427-249.000.
Lee, Yong Bok: *See—*
Baik, Bu Hyun; Lee, Young Woo; and Lee, Yong Bok, 5,700,832, Cl. 514-502.000.
Lee, Young Woo: *See—*
Baik, Bu Hyun; Lee, Young Woo; and Lee, Yong Bok, 5,700,832, Cl. 514-502.000.
Lee, Young-Gil; and Ryu, Beom-Geol, to Mando Machinery Corp. Method for controlling temperature in a chamber of a food storage apparatus. 5,699,674, Cl. 62-115.000.
Leeson, Paul David; Smith, Adrian Leonard; Ridgill, Mark Peter; Baker, Raymond; Curtis, Neil Roy; and Kulagowski, Janusz Jozef, to Merck Sharp & Dohme, Ltd. Pyrrolo-pyridine derivatives. 5,700,809, Cl. 514-300.000.
Leeson, Paul David: *See—*
Curtis, Neil Roy; Kulagowski, Janusz Jozef; and Leeson, Paul David, 5,700,802, Cl. 514-253.000.
Lefebvre, Ronald: *See—*
Lamm, Richard M.; and Lefebvre, Ronald, 5,700,112, Cl. 406-93.000.
Lefkowitz, Leonard R. Air permeable belt for dewatering web in press nip. 5,700,356, Cl. 162-358.100.
Legal Video Services, Inc.: *See—*
Reichek, Joshua A. S.; and Stackenfeld, Avi J., 5,701,153, Cl. 348-15.000.
Leggett and Platt, Inc.: *See—*
Bullard, Larry L.; Sigmon, Allen; and Tornero, Roger, 5,700,060, Cl. 297-452.630.
Legner, Jürgen, to ZF Friedrichshafen AG. Power-shiftable gear, especially two-speed planet gear. 5,700,220, Cl. 475-129.000.

Legoux, Richard; Maldonado, Paul; and Salome, Marc, to Sanofi. Method for the extraction of periplasmic proteins from prokaryotic microorganisms in the presence of arginine. 5,700,665, Cl. 435-71.200.
Legvold, Vernon J.; Liu, Julia; Michod, Carol S.; Ng, Chan Yiu; Sherman, William G., II; Steffan, Jeffrey R.; and Van Gundy, Steven R., to International Business Machines Corporation. Method and system for maintaining concurrent data access during device upgrade. 5,701,429, Cl. 395-441.000.
Lehmann, Ernst: *See—*
  Stein, Götz; McEvoy, Noel; Lehmann, Ernst; and Tarchini, Marcello, 5,699,735, Cl. 101-219.000.
Leica AG: *See—*
  Dittrich, Frank, 5,701,259, Cl. 364-571.010.
Leigh, Stephen: *See—*
  Guenther, Edward W.; and Leigh, Stephen, 5,701,359, Cl. 381-203.000.
Leitner, Horst; and Weisel, Jonathan E., to Leitner, Horst. Truck bed extender. 5,700,047, Cl. 296-26.000.
Lekholm, Anders; and Wård, Leif, to Siemens Elema AB. Anesthetic system which is automatically switched to temporary operation as an open breathing system upon a change in an anesthetic, and method for operating same. 5,699,788, Cl. 128-203.120.
Leland, Jonathan K.: *See—*
  Ghaed, Ali; Leland, Jonathan K.; Zoski, Glenn D.; Goodman, Jack E.; and Grosser, John T., 5,700,427, Cl. 422-52.000.
Leland Stanford Junior University, The Board of Trustees of the: *See—*
  Digonnet, Michel J. F.; Falquier, Dario G.; Wagener, Jefferson L.; and Shaw, H. John, 5,701,318, Cl. 372-6.000.
  Smith, Julius O., III; and Cook, Perry R., 5,701,393, Cl. 395-2.670.
Le Letty, Eric Charles Louis: *See—*
  Capelle, Jean-Yves; Desaulty, Michel André Albert; and Le Letty, Eric Charles Louis, 5,699,663, Cl. 60-204.000.
Lemelson, Jerome H. Stacked components assembly toy. 5,700,177, Cl. 446-117.000.
Leonard, Jack L.; and Newburger, Peter E., to University of Massachusetts Medical Center. Positional control of selenium insertion in polypeptides for X-ray crystallography. 5,700,660, Cl. 435-69.100.
Leonard, Thomas E.: *See—*
  Goodchild, John; and Leonard, Thomas E., 5,700,923, Cl. 536-23.100.
Leonardo, Joseph L.: *See—*
  Higuchi, Fumii; Ianni, John J.; Smith, Fraser S.; Hawkins, Michael G.; and Leonardo, Joseph L., 5,700,413, Cl. 264-145.000.
LePennec, Jean-Francois: *See—*
  Benayoun, Alain; Fieschi, Jacques; Michel, Patrick; and LePennec, Jean-Francois, 5,701,468, Cl. 395-612.000.
Lerro, Sam M. Swimming instructional device. 5,700,173, Cl. 441-57.000.
Leser, Wolfgang: *See—*
  Foerster, Hans; and Leser, Wolfgang, 5,699,672, Cl. 62-86.000.
Letoublon, Laurent: *See—*
  Koelemeijer, Alexandra; Knuchel, Bernard; Letoublon, Laurent; and Olgiati, Stéphane, 5,700,963, Cl. 84-95.100.
Leung, Roger Yiming: *See—*
  Kuo, Lawrence Lu; Leung, Roger Yiming; and Williams, Kenneth Samuel, 5,700,893, Cl. 526-307.100.
Level One Communications, Inc.: *See—*
  Shafir, Haim, 5,701,099, Cl. 327-552.000.
Lever Brothers Company, Division of Conopco, Inc.: *See—*
  Haq, Ziya; Khan-Lodhi, Abid Nadim; and Sams, Philip John, 5,700,387, Cl. 252-8.630.
Levine, Michael R.: *See—*
  Russo, James; and Levine, Michael R., 5,701,383, Cl. 386-46.000.
Levitzki, Alex: *See—*
  Hirth, Klaus Peter; Schwartz, Donna Pruess; Mann, Elaina; Shawver, Laura Kay; Keri, Gyorgi; Szekely, Istvan; Bajor, Tamas; Haimichael, Janis; Orfi, Laszlo; Levitzki, Alex; Gazit, Aviv; Ullrich, Axel; Lammers, Reiner; Kabbinavar, Fairooz F.; Slamon, Dennis; and Tang, Peng Cho, 5,700,822, Cl. 514-380.000.
  Hirth, Klaus Peter; Schwartz, Donna Pruess; Mann, Elaina; Shawver, Laura Kay; Kéri, György; Székely, István; Bajor, Tamás; Haimichael, Janis; Orfi, László; Levitzki, Alex; Gazit, Aviv; Ullrich, Axel; and Lammers, Reiner, 5,700,823, Cl. 514-380.000.
Levy, David Howard: *See—*
  Eshelman, Lyn Marie; Miller, David Darrell; and Levy, David Howard, 5,700,608, Cl. 430-20.000.
Lew, Hyok S.; and Lew, Yon S. Inertia force flowmeter with transverse pressure gradient sensors. 5,700,958, Cl. 73-861.357.
Lew, Yon S.: *See—*
  Lew, Hyok S.; and Lew, Yon S., 5,700,958, Cl. 73-861.357.
Lewbart, Marvin Louis: *See—*
  Schwartz, Arthur G.; and Lewbart, Marvin Louis, 5,700,793, Cl. 514-177.000.
Lewis, David E.; and Murphy, Kent T., to Discovision Associates. Flexible strip cable with extension for testing. 5,700,979, Cl. 174-117.00F.
Lewis, Ian D.; and Hauck, Preston A., to Microstar Laboratories. Method and apparatus for providing initial instructions through a communications interface in a multiple computer system. 5,701,417, Cl. 395-200.160.
Lewis, James D.: *See—*
  Myers, David J.; Lewis, James D.; House, Wayne D.; and Schwarz, Karl E., 5,700,285, Cl. 623-1.000.
  Myers, David J.; Lewis, James D.; and Campbell, Carey V., 5,700,287, Cl. 623-1.000.
Lexmark International, Inc.: *See—*
  Portig, Harald; Schoedinger, Kevin Dean; Seman, Richard Andrew, Jr.; and Wright, Phillip Byron, 5,701,549, Cl. 399-36.000.
Leydorf, George Fredric, Jr.: *See—*
  Yang, Jialin; Leydorf, George Fredric, Jr.; and Anderson, Richard Walter, 5,699,760, Cl. 123-41.740.
Leyen, Thomas; Sheldrup, Ronald; Burks, Warren; and Macias, Moises, to DNB Dataware Sciences, Inc. Technologies. Call box with keyboard communication. 5,701,338, Cl. 379-58.000.
Leyva, Bartolo L.: *See—*
  Plummer, Leonard M.; Leyva, Bartolo L.; and Rentzel, Richard T., 5,700,161, Cl. 439-587.000.
LG Electronics Inc.: *See—*
  Fedorovish, Ogurtsov Oleg; and Ivanovich, Kazurov Boris, 5,701,166, Cl. 349-38.000.
  Han, Chul-Hi; Kim, Choong-Ki; Lee, Jung-Yeal; and Oh, Kil-Hwan, 5,700,699, Cl. 437-21.000.
LG Semicon Co., Ltd.: *See—*
  Choi, Chang Won, 5,701,162, Cl. 348-570.000.
  Lee, Jun Seok; Hur, Hun; and Song, Young Jin, 5,700,626, Cl. 430-296.000.
  Park, Soung Hwi, 5,701,105, Cl. 331-153.000.
Li, Kuo-Tseng; and Ker, Yen-Chun, to National Science Council. Selective oxidation of hydrogen sulfide in the presence of iron-based catalysts. 5,700,440, Cl. 423-231.000.
Liang, Andrew; Cheng, Lilian; and Chen, Gwo Chyuan, to Quanta Computer Inc. Portable computer with thin compartment for receiving a flat article therein. 5,701,230, Cl. 361-681.000.
Liang, Wen-Sheng, to Taiwan Semiconductor Manufacturing Company Ltd. Integrated circuit wafer container. 5,699,916, Cl. 206-710.000.
Liao, Chin-Cherng, to Vanguard International Semiconductor Corporation. Plasma purge method for plasma process particle control. 5,700,741, Cl. 438-723.000.
Liao, Yun-Hsin: *See—*
  Hedrick, Jeffrey Curtis; Hedrick, James Lupton; Liao, Yun-Hsin; Miller, Robert Dennis; and Shih, Da-Yuan, 5,700,844, Cl. 521-77.000.
Liddle, James Alexander: *See—*
  Berger, Steven David; Liddle, James Alexander; and Watson, George Patrick, 5,701,014, Cl. 250-492.220.
Liedenbaum, Coen T. H. F.; Colak, Sel B.; and Schleipen, Johannes J. H. B., to U.S. Philips Corporation. Multimode-laser for an optical information processing system such as a neural net. 5,701,396, Cl. 395-25.000.
Life Resuscitation Technologies, Inc.: *See—*
  Federowicz, Michael G.; Fahy, Gregory M.; and Wood, Lawrence E., 5,700,828, Cl. 514-419.000.
Light, Nicholas D.: *See—*
  Rosenthal, Arthur L.; Light, Nicholas D.; and Haynes, Carla A., 5,700,476, Cl. 424-426.000.
  Rosenthal, Arthur L.; Light, Nicholas D.; and Watt, Paul W., 5,700,477, Cl. 424-426.000.
Lightning Eliminators & Consultants, Inc.: *See—*
  Carpenter, Roy B., Jr., 5,699,818, Cl. 135-16.000.
Ligmatech Maschinenbau GmbH: *See—*
  Tönnigs, Bodo; and Kaden, Dietmar, 5,700,128, Cl. 414-789.100.
Lim, Liat: *See—*
  Yong, Dennis; Cheng, Viktor Choong-Hung; Lim, Liat; and Tay, Siew Choon, 5,701,466, Cl. 395-611.000.
Lin, Blake. Miniature lamp. 5,701,051, Cl. 313-318.100.
Lin, Derrick: *See—*
  Glew, Andrew F.; Mennemeier, Larry M.; Peleg, Alexander D.; Bistry, David; Mittal, Millind; Dulong, Carole; Kowashi, Eiichi; Eitan, Benny; Lin, Derrick; and Vakkalagadda, Ramamohan R., 5,701,508, Cl. 395-800.000.
Lin, John C. H.; Lee, Daniel Hao-Tien; and Cherng, Meng-Jaw, to Vanguard International Semiconductor Corporation. Method for manufacturing crown-shaped storage capacitors on dynamic random access memory cells. 5,700,731, Cl. 438-381.000.
Lin, Jonathan: *See—*
  Barsan, Radu; and Lin, Jonathan, 5,700,698, Cl. 437-8.000.
Lin, Jyh-Kuang: *See—*
  Kuo, Ta-Chi; and Lin, Jyh-Kuang, 5,700,728, Cl. 438-216.000.
Lin, Larry: *See—*
  Hsu, Chen-Chung; Chang, Tsun-Tsai; and Lin, Larry, 5,700,711, Cl. 437-60.000.
Lin, Li-Ching. Unsaturated polyester and the manufacturing method thereof. 5,700,557, Cl. 428-312.400.
Lin, Shen-Ju. Golf putter structure. 5,700,206, Cl. 473-293.000.
Lin, Tsann: *See—*
  Fontana, Robert Edward, Jr.; Gurney, Bruce Alvin; Lin, Tsann; Speriosu, Virgil Simon; Tsang, Ching Hwa; and Wilhoit, Dennis Richard, 5,701,223, Cl. 360-113.000.
Linde Aktiengesellschaft: *See—*
  Forster, Franz, 5,699,715, Cl. 92-12.200.
Lindfors, Allen J.: *See—*
  Weinhardt, Robert; Lindfors, Allen J.; Rieger, James L., deceased, 5,701,101, Cl. 327-561.000.
Lingane, Paul J.: *See—*
  Yassinzadeh, Zia; and Lingane, Paul J., 5,700,695, Cl. 436-180.000.
Linhares, Stephen J.: *See—*
  Negus, Charles Christopher; and Linhares, Stephen J., 5,700,259, Cl. 606-14.000.

Linskey, Edward, Jr.; and Daigle, Robert V. Line handling device for positioning and handling of mooring lines. 5,699,748, Cl. 114-221.00R.
Linz, Günter: *See—*
  Pieper, Helmut; Austel, Volkhard; Himmelsbach, Frank; Linz, Günter; Guth, Brian; and Weisenberger, Johannes, 5,700,801, Cl. 514-252.000.
Liotta, Dennis C.; Schinazi, Raymond F.; and Choi, Woo-Baeg, to Emory University. Method for the synthesis, compositions and use of 2'-deoxy-5-fluoro-3'-thiacytidine and related compounds. 5,700,937, Cl. 544-317.000.
Liou, Jiunn-Yau; Wheeler, Richard L.; Sen, Bidyut; and Parker, James C., Jr., to Fujitsu Limited. Systems for controlling power consumption in integrated circuits. 5,701,071, Cl. 323-220.000.
Lippmann, Raymond; Schnars, Michael John; Nelson, James Edward; and Chintyan, James Robert, to Delco Electronics Corporation. Serial communication method and apparatus. 5,701,330, Cl. 375-257.000.
Lismonde, Michel: *See—*
  Jeanvoine, Pierre; Lismonde, Michel; and Vieslet, Jacques, 5,700,579, Cl. 428-437.000.
Litch, Timothy Ernest: *See—*
  Miller, Gary Lynn; Goler, Vernon Bernard; and Litch, Timothy Ernest, 5,701,421, Cl. 395-309.000.
Littelfuse, Inc.: *See—*
  McGuire, Katherine M.; and Ward, Mike A., 5,699,607, Cl. 29-612.000.
Little, James H.: *See—*
  Barwick, Billie John, Jr.; and Little, James H., 5,700,240, Cl. 604-22.000.
Littmann, Laszlo; Lau, Liming; and Amirana, Omar, to CaRDiMa, Inc. High resolution intravascular signal detection. 5,699,796, Cl. 128-642.000.
Liu, Chin-Kai: *See—*
  Shiue, Ruey-Yun; Wu, Wen-Teng; Shieh, Pi-Chen; and Liu, Chin-Kai, 5,700,735, Cl. 438-612.000.
Liu, Gang: *See—*
  Dao, Giang T.; Tam, Nelson N.; Liu, Gang; and Farnsworth, Jeffrey N., 5,700,602, Cl. 430-5.000.
Liu, Jack. Decorative plate with dynamic phenomenon. 5,700,964, Cl. 84-95.200.
Liu, Julia: *See—*
  Legvold, Vernon J.; Liu, Julia; Michod, Carol S.; Ng, Chan Yiu; Sherman, William G., II; Steffan, Jeffrey R.; and Van Gundy, Steven R., 5,701,429, Cl. 395-441.000.
Liu, Si-kwang, to Pig Research Institute, Taiwan. Silver stain for collagen matrix from paraffin embedded tissue. 5,700,656, Cl. 435-40.520.
Liu, Wen-Chau; and Laih, Lih-Wen, to National Science Council. Pseudomorphic step-doped-channel field-effect transistor. 5,701,020, Cl. 257-[illegible].
Liu, Yixiong, to Kennametal Inc. Method for making a diamond-coated member. 5,701,578, Cl. 428-565.000.
Livadas, Jerry E.: *See—*
  Loffus, Kevin D.; Hilbert, Thomas K.; Roets, David A.; and Livadas, Jerry E., 5,701,550, Cl. 399-44.000.
Liverton, Nigel: *See—*
  Claremon, David A.; Liverton, Nigel; and Selnick, Harold G., 5,700,797, Cl. 514-221.000.
Livingstones Patenter AB: *See—*
  Wihk, Bernt E L, 5,701,069, Cl. 320-21.000.
Lockett, Michael James; and Srinivasan, Vijayaraghavan, to Praxair Technology, Inc. Downflow shell and tube reboiler-condenser heat exchanger for cryogenic rectification. 5,699,671, Cl. 62-63.000.
Lockett, Michael James: *See—*
  Billingham, John Fredric; and Lockett, Michael James, 5,700,403, Cl. 261-112.200.
Lockheed Martin Corporation: *See—*
  Attaway, Brett W.; Lofgren, John D.; and Kelley, H. Ray, 5,701,308, Cl. 371-22.300.
  Born, Gary A.; Roberts, Thomas A.; and Boor, Peter M., 5,699,662, Cl. 60-39.500.
  Jacobs, Jack H.; Thomas, Matthew M.; Grosskrueger, Duane D.; Carpenter, Bernie F.; and Perry, Alan R., 5,700,337, Cl. 156-64.000.
Lockheed Martin Energy Systems, Inc.: *See—*
  Muhs, Jeffrey D.; and Allison, Stephen W., 5,701,370, Cl. 385-13.000.
Loeffler, Joseph P.: *See—*
  Tartaglia, Joseph M.; Loeffler, Joseph P.; and Turnlund, Todd H., 5,700,286, Cl. 623-1.000.
Loffredo, John Mario: *See—*
  Baker, Ernest Dysart; Dinwiddie, John Monroe, Jr.; Grice, Lonnie Edward; Joyce, James Maurice; Loffredo, John Mario; and Sanderson, Kenneth Russell, 5,701,502, Cl. 395-800.000.
Loffus, Kevin D.; Hilbert, Thomas K.; Roets, David A.; and Livadas, Jerry E., to Eastman Kodak Company. Method and apparatus for controlling charge on toner in a toning station. 5,701,550, Cl. 399-44.000.
Lofgren, John D.: *See—*
  Attaway, Brett W.; Lofgren, John D.; and Kelley, H. Ray, 5,701,308, Cl. 371-22.300.
Logan, Jeffrey Allen; Hattery, John Clifford, Jr.; Sparkman, John Paul; and Pray, David Allan, to General Motors Corporation. Air bag module with energy absorbing mounting bracket. 5,700,028, Cl. 280-728.200.
Logue, Daniel R.; Van Emmerik, Piet T.; Mann, Roger H.; Sun, Edward I.; Avalon, Gary A.; Caldwell, Carol A.; Chang, Eng-Pi; and Huskey, Richard A., to Avery Dennison Corporation. Release films formed by coextrusion. 5,700,571, Cl. 428-352.000.
Loh, Ih-Houng: *See—*
  Sheu, Min-Shyan; and Loh, Ih-Houng, 5,700,559, Cl. 428-319.700.
Loh, Ying-Tsong: *See—*
  Nowak, Edward D.; Loh, Ying-Tsong; and Ding, Lily, 5,700,717, Cl. 437-192.000.
Lohr Industrie: *See—*
  Picard, Antoine, 5,700,023, Cl. 280-426.000.
Lok, Roger; and White, Weimar Weatherly, to Eastman Kodak Company. Photographic element containing new gold(I) compounds. 5,700,631, Cl. 430-605.000.
Lombardi Borgia, Andrea: *See—*
  Mongelli, Nicola; Crugnola, Angelo; Lombardi Borgia, Andrea; and Pesenti, Enrico, 5,700,788, Cl. 514-91.000.
Lombardo, Carl; and Lombardo, Peter. Golf club carrier. 5,699,906, Cl. 206-315.300.
Lombardo, Peter: *See—*
  Lombardo, Carl; and Lombardo, Peter, 5,699,906, Cl. 206-315.300.
Lonero Engineering CO., Inc.: *See—*
  Lonero, Vincent J.; and Luteran, Shawn D., 5,699,692, Cl. 72-110.000.
Lonero, Vincent J.; and Luteran, Shawn D., to Lonero Engineering CO., Inc. New tool mechanisms for deep rolling machines. 5,699,692, Cl. 72-110.000.
Long, Calvin W.: *See—*
  Steelman, Michael L.; and Long, Calvin W., 5,700,341, Cl. 156-172.000.
Long Island Lighting Company: *See—*
  Gelbien, Lawrence J.; Andreas, Philip B.; and Schweiger, Werner J., 5,701,226, Cl. 361-63.000.
Long, Jennifer M.: *See—*
  Cimerman, Christopher D.; and Long, Jennifer M., 5,700,178, Cl. 446-301.000.
Long, Michael David: *See—*
  Weidler, Charles Harry; Long, Michael David; and Moll, Hurley Chester, Jr., 5,700,164, Cl. 439-607.000.
Lonza Inc.: *See—*
  Walker, Leigh E., 5,700,841, Cl. 514-642.000.
Loparco, John Joseph: *See—*
  Goth, Gary Franklin; Kemink, Randall Gail; Loparco, John Joseph; and Schmidt, Roger Ray, 5,699,853, Cl. 165-104.210.
Lopez, George A., to ICU Medical, Inc. Medical valve with tire seal. 5,700,248, Cl. 604-249.000.
Loral Vought Systems Corporation: *See—*
  Flowers, Edward Max, 5,701,326, Cl. 372-99.000.
Lord, Jeffrey D.: *See—*
  Castonguay, Roger N.; and Lord, Jeffrey D., 5,701,111, Cl. 335-177.000.
L'Oreal: *See—*
  Dubief, Claude; and Cauwet, Daniele, 5,700,456, Cl. 424-70.170.
  Malle, Gérard, 5,700,454, Cl. 424-70.200.
Louis, Didier: *See—*
  Steimle, Andre; Louis, Didier; and Paillet, Guy, 5,701,397, Cl. 395-27.000.
Lovrecich, Mara Lucia: *See—*
  Canal, Tiziana; Lovrecich, Mara Lucia; and Carli, Fabio, 5,700,486, Cl. 424-501.000.
Lowe, Martin; and Jenkinson, Timothy, to Pilkington Glass Limited. Method of producing heatable mirrors by depositing coatings on glass. 5,700,305, Cl. 65-60.100.
LSI Logic Corporation: *See—*
  Barber, Ivor G., 5,700,723, Cl. 437-214.000.
  Hunt, Kenneth Stephen, 5,701,331, Cl. 375-316.000.
  Pasch, Nicholas F., 5,700,715, Cl. 437-183.000.
LTS Lohman Therapie-Systeme GmbH & Co. KG: *See—*
  Hille, Thomas; and Deurer, Lothar, 5,700,480, Cl. 424-448.000.
Lu, Carrie J.; and Yein, Fredrick S., to Beckman Instruments, Inc. Liquid stable thiol activator. 5,700,653, Cl. 435-15.000.
Lu, Jin-Yuh: *See—*
  Chang, De-An; and Lu, Jin-Yuh, 5,699,733, Cl. 101-129.000.
Lu, Nien-feng. Detergent controlling means for use in a toilet. 5,699,562, Cl. 4-223.000.
Lu, Robert Zhong, to Reckitt & Colman Inc. Floor cleaning compositions. 5,700,768, Cl. 510-214.000.
Lubbock, Maurice P. G.: *See—*
  Catallo, Giulio; Cihlar, Joe V.; and Lubbock, Maurice P. G., 5,699,838, Cl. 141-65.000.
Lubock, Paul: *See—*
  Buelna, Terrence J.; Noda, Wayne A.; and Lubock, Paul, 5,700,273, Cl. 606-148.000.
Lucas, Eric E.; Vitantonio, Marc L.; and Miroewski, Michael, to Healthometer, Inc. Thermal carafe brewing device with brew-through lid. 5,699,719, Cl. 99-299.000.
Lucas Industries plc: *See—*
  Mortimer, Ivan, 5,699,713, Cl. 91-369.200.
Lucent Technologies: *See—*
  Pharney, Julian Robert; and Spitz, William Tracy, 5,700,167, Cl. 439-676.000.
Lucent Technologies Inc.: *See—*
  Bales, Bruce Merrill; and Thieler, Stephen Max, 5,701,295, Cl. 370-271.000.
  Basavanhally, Nagesh Ramamoorthy, 5,700,987, Cl. 219-56.100.
  Berger, Steven David; Liddle, James Alexander; and Watson, George Patrick, 5,701,014, Cl. 250-492.220.

Chandross, Edwin Arthur; Galvin-Donoghue, Mary Ellen; and Papadimitrakopoulos, Fotios, 5,700,696, Cl. 437-1.000.
Chen, Howard Zehua, 5,701,152, Cl. 348-3.000.
Chiussi, Fabio Massimo; Kumar, Vijay Pochampalli; Tryfonas, Christos; and Sudhakar, Muddu, 5,701,292, Cl. 370-232.000.
Cunningham, John Edward; Jan, William Young; Knox, Wayne Harvey; and Tsuda, Sergio, 5,701,327, Cl. 372-99.000.
Dorward, Sean Matthew; and Johnston, James David, 5,701,389, Cl. 395-2.120.
Hower, Glenn Roy; and Kumagai, Henry Y., 5,700,725, Cl. 437-225.000.
Miller, Gabriel L.; and Wagner, Eric R., 5,701,133, Cl. 345-46.000.
Lucky Corporation Co., Ltd.: *See*—
Furukawa, Toshiyuki, 5,699,815, Cl. 132-279.000.
Lueddecke, Erik: *See*—
End, Lutz; Horn, Dieter; and Lueddecke, Erik, 5,700,471, Cl. 424-400.000.
Luftig, Steven: *See*—
Miller, Scott; Brady, Don; Williamson, Steven; Luftig, Steven; and Musto, Dominick, 5,700,141, Cl. 431-125.000.
Miller, Scott; Brady, Don; Williamson, Steven; Luftig, Steven; and Musto, Dominick, 5,700,142, Cl. 431-125.000.
Luitje, William V., to Chrysler Corporation. Intra-vehicular LAN and method of routing messages along it using hash functions. 5,701,418, Cl. 395-200.160.
Lumley, David William: *See*—
Gilliam, Peter H.; and Lumley, David William, 5,699,601, Cl. 29-278.000.
Lundell, Louis J.: *See*—
Emmert, Steven C.; Lundell, Louis J.; and Murray, Michael P., 5,701,244, Cl. 363-146.000.
Lundgren, Dan, to Guidor AB. Surgical element and method for selective tissue regeneration. 5,700,479, Cl. 424-435.000.
Lundquist, Eskil, to Tarkett AG. Flooring material. 5,700,865, Cl. 524-506.000.
Lungershausen, Arnold; and Holden, Carl Lawrence, to Eastman Kodak Company. Infrared illumination system for digital camera. 5,701,015, Cl. 250-495.100.
Lupton, David Francis: *See*—
Hörmann, Michael; Lupton, David Francis; Schaelke, Jörg; and Schölz, Friedhold, 5,700,418, Cl. 264-604.000.
Lupyan, David A.: *See*—
Fausnight, Ronald L.; and Lupyan, David A., 5,700,312, Cl. 106-10.000.
Luteran, Shawn D.: *See*—
Lonero, Vincent J.; and Luteran, Shawn D., 5,699,692, Cl. 72-110.000.
Lutes, Paul Joseph: *See*—
Gray, James Delwin; Hughes, Michael Franklin; and Lutes, Paul Joseph, 5,700,140, Cl. 418-104.000.
Lutz, Silvia: *See*—
Faust, Raimund Josef; and Lutz, Silvia, 5,700,618, Cl. 430-124.000.
M.P.G. Co. Ltd.: *See*—
Hirota, Kunio, 5,700,503, Cl. 426-74.000.
Mabuchi, Masaki: *See*—
Mano, Junichi; Ogawa, Youzou; Mabuchi, Masaki; Okuno, Keizou; and Totsuka, Nobuo, 5,700,561, Cl. 428-327.000.
MacDermid Imaging Technology: *See*—
Strong, Kenneth M., 5,699,739, Cl. 101-463.100.
MacDonald, John Gavin: *See*—
Nohr, Ronald Sinclair; and MacDonald, John Gavin, 5,700,850, Cl. 522-34.000.
Macfarlane, Kevin Douglas: *See*—
Cook, Roger Joseph; DeVoe, Joseph Paul; Macfarlane, Kevin Douglas; Parks, Daniel Robert; and Gibson, Patrick William, 5,701,063, Cl. 318-469.000.
Machida, Kiyosada: *See*—
Wakabayashi, Hiroshi; and Machida, Kiyosada, 5,701,528, Cl. 396-268.000.
Machijima, Kenji: *See*—
Sohma, Masahiko; Zushi, Osamu; Machijima, Kenji; and Tsutsumi, Hisao, 5,700,126, Cl. 414-416.000.
Macias, Moises: *See*—
Leyen, Thomas; Sheldrup, Ronald; Burks, Warren; and Macias, Moises, 5,701,338, Cl. 379-58.000.
Mackay, Bruce E.: *See*—
Chung, Bin; Mackay, Bruce E.; and Podobnik, Ivan Zlatko, 5,700,845, Cl. 521-99.000.
Mackay, Diane: *See*—
Moynihan, Edward R.; Gailus, David W.; Palifka, Robert G.; Hoisington, Paul A.; Hine, Nathan P.; Adams-Brady, David; Biggs, Melvin L.; McDonald, Marlene M.; Barss, Steven H.; Mackay, Diane; Paulson, Bruce A.; and Mackay, Stephen C., 5,701,148, Cl. 347-92.000.
Mackay, Stephen C.: *See*—
Moynihan, Edward R.; Gailus, David W.; Palifka, Robert G.; Hoisington, Paul A.; Hine, Nathan P.; Adams-Brady, David; Biggs, Melvin L.; McDonald, Marlene M.; Barss, Steven H.; Mackay, Diane; Paulson, Bruce A.; and Mackay, Stephen C., 5,701,148, Cl. 347-92.000.
MacKenzie, Christopher J.: *See*—
Zalewski, Wojciech T.; Steele, Guy; and MacKenzie, Christopher J., 5,700,026, Cl. 280-704.000.
Mackie, Christopher Jon. Ball for throwing in patterns in which a baseball can be thrown. 5,700,211, Cl. 473-613.000.
Macpherson, Ian: *See*—
Walters, David Kenvyn; and Macpherson, Ian, 5,700,764, Cl. 508-338.000.
Madulka, Karol Anne Liu: *See*—
Piacente, Robert A.; Madulka, Karol Anne Liu; and Kenna, John M., 5,700,088, Cl. 374-141.000.
Maeda, Hirokazu; Furuta, Hitoshi; Takahashi, Taro; Takei, Chiemi; Kurita, Hiroko; and Sato, Yoko, to Fuji Oil Co., Ltd. Emulsifier, emulsion composition, and powder composition. 5,700,397, Cl. 252-312.000.
Maeda, Kouji: *See*—
Katayama, Yasushi; Maeda, Kouji; Nakai, Ryozo; Muroi, Yoshiyuki; and Okajima, Takao, 5,700,449, Cl. 424-49.000.
Magdeburger Energie - und Umwelttechnik GmbH: *See*—
Klatt, Bruno; Horx, Manfred; Koelling, Hartmut; Berndt, Karlheinz; Krueger, Gerhard; Kuenne, Hans-Joachim; Moerl, Lothar; and Backhauss, Lothar, 5,700,572, Cl. 428-357.000.
Magel, Gregory A.; and Boysel, Robert M., to Texas Instruments Incorporated. Hybrid architecture for integrated optic switchable time delay lines and method of fabricating same. 5,701,372, Cl. 385-24.000.
Magellan Technology Pty. Ltd.: *See*—
Murdoch, Graham Alexander M., 5,701,121, Cl. 340-825.540.
Magerstädt, Michael: *See*—
Krone, Volker; Magerstädt, Michael; Walch, Axel; Gröner, Albrecht; and Hoffmann, Dieter, 5,700,459, Cl. 424-78.080.
Magin, Ralph W.; Sauer, Joe D.; and Quebedeaux, Deborah A., to Albemarle Corporation. Herbicidal and plant growth regulant compositions and their use. 5,700,760, Cl. 504-206.000.
Magnetrol International, Inc.: *See*—
Borthwick, James Thomas, Jr.; and Zalud, Christopher Michael, 5,701,084, Cl. 324-690.000.
Mahairas, Gregory G.: *See*—
Stover, Charles Kendall; and Mahairas, Gregory G., 5,700,683, Cl. 435-252.310.
Mahmoud, Mohamed Ibrahim: *See*—
Mulchandani, Rohini Prakash; and Mahmoud, Mohamed Ibrahim, 5,700,513, Cl. 426-590.000.
Majima, Yoshihiro: *See*—
Yonekawa, Masao; Majima, Yoshihiro; Miwa, Makoto; Minagawa, Kazuji; and Oi, Kiyotoshi, 5,699,772, Cl. 123-497.000.
Mak, Paul; and Karathanasis, Sotirios K., to American Cyanamid Company. Mechanism-based screen for retinoid X receptor agonists and antagonists. 5,700,650, Cl. 435-7.100.
Mak, Paul; and Karathanasis, Sotirios K., to American Cyanamid Company. Mechanism based screen for retinoid X receptor agonists and antagonists. 5,700,682, Cl. 435-252.300.
Makhlin, Ilya: *See*—
Grois, Igor; Makhlin, Ilya; Bunin, Grigoriy; and Pescetto, Michael J., 5,701,382, Cl. 385-140.000.
Makishima, Shinichi; and Mochizuki, Keizo, to Meiji Seika Kaisha, Ltd. Process for the manufacture of fried potatoes. 5,700,508, Cl. 426-441.000.
Makiuchi, Masao, to Fujitsu Limited. Integrated optical module including a waveguide and a photoreception device. 5,701,374, Cl. 385-49.000.
Malcolm, Peter Bryan, to Cheyenne Advanced Technology Limited. Method of replacing the identity of a file with another as part of a file open request in a computer system. 5,701,463, Cl. 395-610.000.
Maldonado, Paul: *See*—
Legoux, Richard; Maldonado, Paul; and Salome, Marc, 5,700,665, Cl. 435-71.200.
Malladi, Deviprasad; Hanson, Lee Frederick; and Kahahane, Jean, to Sun Microsystems, Inc. Apparatus for testing flip chip or wire bond integrated circuits. 5,701,085, Cl. 324-754.000.
Malle, Gérard, to L'Oreal. Cosmetic composition containing an N-mercaptoalkylalkanediamide or one of its cosmetically acceptable salts as reducing agent. 5,700,454, Cl. 424-70.200.
Maloney, Christopher W.; Jackson, Brian D.; Mayfield, Kevin B.; Mills, Mark A.; and Tracy, Kent A., to Informix Software, Inc. Logical schema to allow access to a relational database without using knowledge of the database structure. 5,701,453, Cl. 395-602.000.
Maltby, Robert E., Jr.; McMaster, Harold A.; Breno, Philip J.; Buckingham, James W.; and Vild, Michael J., to Glasstech, Inc. Glass sheet strip forming system including annealing lehr. 5,700,306, Cl. 65-182.200.
Mamada, Takao, to Sanyo Electronic Co., Ltd. Audio signal processing circuit for compressing or expanding audio signal in which output DC voltage is controlled in response to reference voltage. 5,701,353, Cl. 381-106.000.
MAN Roland Druckmaschinen AG: *See*—
Hummel, Peter; and Ortner, Robert, 5,699,737, Cl. 101-247.000.
Muller, Joachim; and Klingler, Horst, 5,699,736, Cl. 101-232.000.
Manabe, Yasuhiko: *See*—
Shiomitsu, Tohru; Manabe, Yasuhiko; Ogawa, Takashi; Takita, Yusaku; and Ishihara, Tatsumi, 5,700,361, Cl. 204-491.000.
Mandeville, W. Harry, III; and Garigapati, Venkata R., to GelTex Pharmaceuticals Inc. Acid-functionalized saccharides as polyvalent anti-infectives. 5,700,458, Cl. 424-78.070.
Mando Machinery Corp.: *See*—
Lee, Young-Gil; and Ryu, Beom-Geol, 5,699,674, Cl. 62-115.000.
Mann, Douglas B.: *See*—
Flautt, Martin C.; Adzima, Leonard J.; and Mann, Douglas B., 5,700,574, Cl. 428-392.000.
Mann, Elaina: *See*—

Hirth, Klaus Peter; Schwartz, Donna Pruess; Mann, Elaina; Shawver, Laura Kay; Keri, Gyorgi; Szekely, Istvan; Bajor, Tamas; Haimichael, Janis; Orfi, Laszlo; Levitzki, Alex; Gazit, Aviv; Ullrich, Axel; Lammers, Reiner; Kabbinavar, Fairooz F.; Slamon, Dennis; and Tang, Peng Cho, 5,700,822, Cl. 514-380.000.
Hirth, Klaus Peter; Schwartz, Donna Pruess; Mann, Elaina; Shawver, Laura Kay; Kéri, György; Székely, István; Bajor, Tamás; Haimichael, Janis; Orfi, László; Levitzki, Alex; Gazit, Aviv; Ullrich, Axel; and Lammers, Reiner, 5,700,823, Cl. 514-380.000.
Mann, Roger H.: *See*—
Logue, Daniel R.; Van Emmerik, Piet T.; Mann, Roger H.; Sun, Edward I.; Avalon, Gary A.; Caldwell, Carol A.; Chang, Eng-Pi; and Huskey, Richard A., 5,700,571, Cl. 428-352.000.
Mann, Stephen: *See*—
Morrison, Gary Wayne; Mann, Stephen; and Bennett, Christopher, 5,700,755, Cl. 503-227.000.
Manning, Hartford W., to Torcan Chemical Ltd. Process for preparing nizatidine. 5,700,945, Cl. 548-203.000.
Manning, Michael J. Exhaust pipe to hose adapter for vermin extermination. 5,700,039, Cl. 285-148.230.
Manning, Michael Patrick; and Schilke, Peter William, to General Electric Co. Threaded fastener and method of improving the fatigue life thereof. 5,700,120, Cl. 411-389.000.
Manning, Monte, to Micron Technology, Inc. Method of forming a thin film transistor. 5,700,727, Cl. 438-156.000.
Manning, Monte, to Micron Technology, Inc. Semiconductor processing methods of forming field oxide regions on a semiconductor substrate. 5,700,733, Cl. 438-439.000.
Manning, Robert Francis: *See*—
Lampes, Elias Harry; Jacobson, Craig Robert; and Manning, Robert Francis, 5,700,132, Cl. 416-97.00R.
Mano, Junichi; Ogawa, Youzou; Mabuchi, Masaki; Okuno, Keizou; and Totsuka, Nobuo, to Kawasaki Steel Corporation. Chromated metal sheet having high corrosion resistance with improved lubricity and electric conductivity. 5,700,561, Cl. 428-327.000.
Manstretta, Alessandro: *See*—
Calligaro, Cristiano; Daniele, Vincenzo; Gastaldi, Roberto; Manstretta, Alessandro; and Torelli, Guido, 5,701,265, Cl. 365-185.030.
Manthuruthil, George C.: *See*—
Johnson, William J.; Keller, Robert Scott; Manthuruthil, George C.; and Williams, Marvin L., 5,701,510, Cl. 395-806.000.
Manya, Omerom: *See*—
Lee, Steven G.; Iehl, Brian D.; Manya, Omerom; Schellinger, Michael J.; and D'Avello, Robert F., 5,701,589, Cl. 455-56.100.
Maples, Phillip B.: *See*—
Bender, James G.; Maples, Phillip B.; Smith, Stephen; Unverzagt, Kristen L.; and Van Epps, Dennis E., 5,700,691, Cl. 435-325.000.
Marathe, Manoj V.: *See*—
Goodfellow, Val S.; Marathe, Manoj V.; Whalley, Eric T.; Fitzpatrick, Timothy D.; and Kuhlman, Karen G., 5,700,779, Cl. 514-14.000.
Marble, Herbert A.; and Davis, Robert H., to University of Colorado, The, Regents of the. Strategy for the production of RNA from immobilized templates. 5,700,667, Cl. 435-91.300.
Marchand, Jean-Louis; Palomera, Michel; Peeters, Michel; and Salomon, Jean-Paul, to Caterpillar Inc. Method of manufacturing a split master link by electrical discharge machining. 5,700,384, Cl. 219-69.120.
Maresca, Robert L.: *See*—
Parison, James A.; Froeschle, Thomas A.; and Maresca, Robert L., 5,701,039, Cl. 310-12.000.
Margulies, Joseph Y., to Hospital for Joint Diseases. Spinal stabilization system and method. 5,700,292, Cl. 623-17.000.
Marinelli, Michael Anthony: *See*—
Fohl, Timothy; Marinelli, Michael Anthony; and Remillard, Jeffrey Thomas, 5,700,078, Cl. 362-32.000.
Mark, Roger: *See*—
Ring, Martin D.; Mark, Roger; Flanagan, Peter F.; Brogan, Patrick M.; and Sturges, James R., 5,701,277, Cl. 367-163.000.
Markem Corporation: *See*—
Larson, Richard J., Jr., 5,700,313, Cl. 106-22.00A.
Markiel, George R.: *See*—
Cousins, James E.; Markiel, George R.; and Boyter, Ruben C., 5,699,866, Cl. 175-78.000.
Marks, Joel Steven, to WorkTools, Inc. Heavy duty forward acting stapling machine. 5,699,949, Cl. 227-132.000.
Marks, Paul A.: *See*—
Breslow, Ronald; Marks, Paul A.; and Rifkind, Richard A., 5,700,811, Cl. 514-314.000.
Marlier, Géry; and Fasquel, Didier, to Alcatel Submarcom. Method for repairing a closure fault of a metal tube containing at least one optical fiber by laser welding. 5,700,990, Cl. 219-121.640.
Marocco, Norbert, to Shade-O-Matic Limited. Arch frame. 5,699,637, Cl. 52-204.530.
Marr, Thomas G.; and Chang, William I-Wei, to Cold Spring Harbor Laboratory. Method and apparatus for biological sequence comparison. 5,701,256, Cl. 364-496.000.
Marrs, Robert C., to Amkor Electronics, Inc. Packaged semiconductor die including heat sink with locking feature. 5,701,034, Cl. 257-706.000.
Marsh, Edward J.: *See*—
Mathur, Eric J.; Marsh, Edward J.; and Schoettlin, Warren E., 5,700,672, Cl. 435-183.000.
Martin, Douglas S.: *See*—
Mascio, Nicholas A.; and Martin, Douglas S., 5,699,924, Cl. 215-252.000.
Martin Marietta Corporation: *See*—
Daugherty, Joseph Patrick, 5,699,982, Cl. 244-63.000.
Martin, Robert J., 5,701,010, Cl. 250-370.060.
Martin, Robert J., to Martin Marietta Corporation. Dual band polarity reversing multiplexer. 5,701,010, Cl. 250-370.060.
Martinis, Marco: *See*—
Cavallo, Giorgio; Giovanelli, Gian Luca; and Martinis, Marco, 5,699,947, Cl. 225-101.000.
Maruki, Hiroshige, to Murata Kikai Kabushiki Kaisha. Spinning apparatus and method for producing a false twisted spun yarn. 5,699,661, Cl. 57-328.000.
Maruko, Nobuhiro: *See*—
Kanayama, Kouichi; and Maruko, Nobuhiro, 5,701,049, Cl. 310-359.000.
Marusho Co., Ltd.: *See*—
Oishi, Tadahiro; Onishi, Toshifumi; and Yoshioka, Yasuo, 5,701,002, Cl. 235-487.000.
Maruyama, Akio: *See*—
Amamiya, Syoji; Maruyama, Akio; and Hashimoto, Yuichi, 5,701,571, Cl. 399-343.000.
Maruyama, Koichi: *See*—
Hasushita, Sachio; Yoneyama, Shuji; Maruyama, Koichi; and Ito, Takayuki, 5,701,205, Cl. 359-691.000.
Maruyama, Masaaki, to Rex Industries Co., Ltd. Adjusting apparatus for roll threading die head. 5,699,691, Cl. 72-104.000.
Maruyama, Yoichiro: *See*—
Sugiyama, Akira; Nakayama, Tsuyoshi; Kato, Masaaki; Maruyama, Yoichiro; and Arisawa, Takashi, 5,701,320, Cl. 372-32.000.
Maruyama, Yuichi: *See*—
Okada, Takekazu; Maruyama, Yuichi; and Sayanagi, Kazuya, 5,701,128, Cl. 343-700.0MS.
Masada, Tomoaki: *See*—
Morimoto, Kiyoshi; Watanabe, Yasushi; Sanada, Yoshika; Miwa, Teiichi; and Masada, Tomoaki, 5,700,492, Cl. 425-100.000.
Maschinenfabrik Niehoff GmbH & Co. KG: *See*—
Phillip, Günther, 5,700,335, Cl. 148-508.000.
Maschinenfabrik WIFAG: *See*—
Stein, Götz; McEvoy, Noel; Lehmann, Ernst; and Tarchini, Marcello, 5,699,735, Cl. 101-219.000.
Mascio, Nicholas A.; and Martin, Douglas S., to Portola Packaging, Inc. Attachment of tamper-evidencing band to closure skirt. 5,699,924, Cl. 215-252.000.
Mascotech, Inc.: *See*—
Hoekstra, Eric, 5,701,116, Cl. 340-431.000.
Masley, Francis J.: *See*—
Goodwin, Brent L.; and Masley, Francis J., 5,700,544, Cl. 428-76.000.
Masnaghetti, Douglas: *See*—
Ximen, Hongyu; Cecere, Michael A.; and Masnaghetti, Douglas, 5,700,526, Cl. 427-527.000.
Masor, Marc Leif; Leach, James Lee; Molitor, Bruce Edward; Benson, John Durand; and Baxter, Jeffrey H., to Abbott Laboratories. Nutritional formula with ribo-nucleotides. 5,700,590, Cl. 426-656.000.
Massachusetts Institute of Technology: *See*—
Lee, Raphael C.; and Huang, David, 5,700,688, Cl. 435-287.100.
Pal, Uday B.; and Szekely, Julian, 5,700,308, Cl. 75-10.100.
Trumper, David L.; and Williams, Mark E., 5,699,621, Cl. 33-1.00M.
Massardo, Pietro: *See*—
De Ferra, Lorenzo; Massardo, Pietro; Piccolo, Oreste; and Servi, Stefano, 5,700,668, Cl. 435-106.000.
Masse, Robert; Dion, Alain; Bessette, Robert; and Tran, Khiem, to 9000-9226 Quebec Inc. Device for producing a shaped confection of edible materials combined into co-extensive strips. 5,700,494, Cl. 425-131.100.
Massman, Brent D.; and Miller, Maria L., to Monsanto Company. Stabilized pesticidal compositions and their use. 5,700,475, Cl. 424-408.000.
Masson, Jacqueline: *See*—
Sanchez, Jean-Yves; Alloin, Fannie; and Masson, Jacqueline, 5,700,880, Cl. 525-403.000.
Masters, James C.: *See*—
Davidson, Russell K.; Heyer, Michael H. J.; and Masters, James C., 5,700,055, Cl. 297-378.120.
Masterson, David C.: *See*—
Hughes, Kenneth E.; Masterson, David C.; Fink, David J.; Metz, Barbara A.; Pickett, Gordon E.; Gemmer, Paul M.; and Brody, Richard S., 5,700,353, Cl. 162-143.000.
Virnelson, Kevin M.; Hughes, Kenneth E.; Masterson, David C.; Fink, David J.; Metz, Barbara A.; Pickett, Gordon E.; Gemmer, Paul M.; and Brody, Richard S., 5,700,354, Cl. 162-143.000.
Masuda, Gen: *See*—
Takenishi, Soichiro; Suzuki, Osamu; Yokomizo, Hirohiko; Ichihara, Tatsuo; Masuda, Gen; Nakajima, Namiko; and Komiya, Kazuko, 5,700,935, Cl. 544-139.000.
Masuda, Isamu, to Nihon Kenko Zoushin Kenkyukai Corporation. Magnetic therapeutic apparatus. 5,700,234, Cl. 600-15.000.
Masuda, Shinichi; Kumaki, Satoshi; and Matsuura, Yoshinori, to Mitsubishi Electric Engineering Co., Ltd.; and Mitsubishi Denki Kabushiki Kaisha. Semiconductor storage device with macro-cell with monitoring of input data. 5,701,267, Cl. 365-201.000.

Masuda, Syuzo; and Iwama, Ryouichi, to Fujitsu Limited. Serial electrophotography apparatus and fixing temperature control method. 5,701,555, Cl. 399-69.000.
Masui, Shohei; Oishi, Kanemitsu; and Mitsui, Kiyoshi, to Sumitomo Chemical Company, Limited. Press molding of thermoplastic resins. 5,700,416, Cl. 264-325.000.
Mataya, Robert F. Variable diameter jet propulsion unit. 5,700,170, Cl. 440-47.000.
Materials Research Corp.: *See—*
Lam, Raymond K. F., 5,700,519, Cl. 427-253.000.
Materne, Kurt André; Philipp, Guenther; and Mueille, Wilhelm, to Thiele GmbH & Co. KG. Scraper for chain bands of double-enter chain scraper conveyors, especially in underground mining. 5,699,895, Cl. 198-731.000.
Mathis, Michael P.: *See—*
Sukiennik, Corrine A.; Mathis, Michael P.; and Gray, Vivian, 5,699,791, Cl. 128-206.130.
Mathur, Eric J.; Marsh, Edward J.; and Schoettlin, Warren E., to Stratagene. Purified thermostable pyrococcus furiousus DNA ligase. 5,700,672, Cl. 435-183.000.
Matsen, Marc R., to Boeing Company, The. Superplastically formed part. 5,700,995, Cl. 219-615.000.
Matshushita Electric Industrial Co., Ltd.: *See—*
Matsuura, Sadahiro; Satou, Shigeru; Kondou, Yasuhiro; and Igarashi, Yoshiaki, 5,701,066, Cl. 318-808.000.
Matsubara, Miyuki: *See—*
Akiyama, Yuji; Hirabayashi, Hiromitsu; Nagoshi, Shigeyasu; Arai, Atsushi; Kurata, Tetsuji; Sugimoto, Hitoshi; and Matsubara, Miyuki, 5,701,146, Cl. 347-26.000.
Matsuda, Hideaki: *See—*
Satoh, Mitsuyoshi; Numabe, Hideo; and Matsuda, Hideaki, 5,700,096, Cl. 400-225.000.
Matsuda, Hidemi; Itou, Takeo; and Nakazawa, Tomoko, to Kabushiki Kaisha Toshiba. Method of manufacturing display screen. 5,700,609, Cl. 430-27.000.
Matsuda, Hiroshi: *See—*
Notsu, Ikurou; Matsuda, Hiroshi; Hamazaki, Nobuo; Takada, Yutaka; Miyata, Tatsuji; and Nakamura, Akira, 5,699,767, Cl. 123-323.000.
Matsuda, Shohei: *See—*
Sugimoto, Yoichi; Urai, Yoshihiro; and Matsuda, Shohei, 5,700,074, Cl. 303-186.000.
Matsuda, Yuji: *See—*
Ohmori, Koichi; Yamamoto, Toshiyoshi; Matsuda, Yuji; Tanji, Yoshihiko; and Yuuzu, Takayoshi, 5,701,011, Cl. 250-370.090.
Matsudaira, Nagahisa: *See—*
Uyama, Haruo; Harada, Takahiro; Kano, Mitsuru; Matsudaira, Nagahisa; Hoshino, Kazuhisa; Kitamura, Satoshi; Noguchi, Fuminobu; and Shikakubo, Tsutomu, 5,700,550, Cl. 428-212.000.
Matsui, Hiroshi: *See—*
Taniguchi, Tadatsugu; Muramatsu, Masami; Sagano, Haruo; Matsui, Hiroshi; Kashima, Nobukazu; and Hamuro, Junji, 5,700,913, Cl. 530-351.000.
Matsuki, Yasuo: *See—*
Nishikawa, Michinori; Miyamoto, Tsuyoshi; Kawamura, Shigeo; Yasuda, Kyouyu; Mutsuga, Yasuaki; and Matsuki, Yasuo, 5,700,860, Cl. 524-317.000.
Matsumoto, Hidetoshi; Yazawa, Masamitsu; and Hirama, Kenji, to Hitachi, Ltd. Semiconductor device having first and second stacked semiconductor layers, with electrical contact to the first semiconductor layer. 5,701,019, Cl. 257-192.000.
Matsumoto, Hiroyuki, to Minolta Co., Ltd. Zoom lens system. 5,701,204, Cl. 359-684.000.
Matsumoto, Hiroyuki: *See—*
Honda, Tsutomu; Itoh, Hisanori; Ueno, Takuya; Mori, Junji; Matsumoto, Hiroyuki; Hasegawa, Yasushi; and Kajita, Hideo, 5,701,518, Cl. 396-29.000.
Matsumoto, Kissei; Fuchu, Katsuki; and Katsuki, Shinji, to Sony Corporation. Optical disk device capable of displaying the whole capacity and the reproduction position on the optical disk. 5,701,282, Cl. 369-32.000.
Matsumoto, Shigeyuki: *See—*
Yuzurihara, Hiroshi; Inoue, Shunsuke; Miyawaki, Mamoru; and Matsumoto, Shigeyuki, 5,700,719, Cl. 437-193.000.
Matsumoto, Shuichi; Kuroyanagi, Masatoshi; Toyada, Tetsuya; Murakami, Masashi; and Arakoma, Yukihisa, to Denso Corporation. Fuel injection system for engine. 5,699,770, Cl. 123-470.000.
Matsumoto, Takuya: *See—*
Muraguchi, Tomokazu; and Matsumoto, Takuya, 5,699,778, Cl. 123-690.000.
Matsumoto, Toshio; Baba, Hiroshi; Itoh, Kazuhiko; and Ogura, Shiro, to Mitsubishi Denki Kabushiki Kaisha. Redundant array of disks with improved storage and recovery speed. 5,701,406, Cl. 395-182.040.
Matsumoto, Toshio; Baba, Hiroshi; Itoh, Kazuhiko; and Ogura, Shiro, to Mitsubishi Denki Kabushiki Kaisha. Redundant array of disks with improved data reconstruction. 5,701,407, Cl. 395-182.050.
Matsumura, Susumu: *See—*
Hoshi, Hiroaki; Matsumura, Susumu; Yamamoto, Masakuni; and Yamaguchi, Eiji, 5,701,279, Cl. 369-13.000.
Matsunaga, Osamu; and Kondo, Akio, to Tosoh Corporation. Process for producing sintered ITO compact. 5,700,419, Cl. 264-656.000.
Matsuno, Koji: *See—*
Hiwatashi, Yutaka; Matsuno, Koji; Takahashi, Akira; and Matsuura, Munenori, 5,700,073, Cl. 303-146.000.
Matsuno, Mitsuo: *See—*
Ikai, Keizo; Minami, Masaki; and Matsuno, Mitsuo, 5,700,400, Cl. 252-513.000.
Matsuno, Youichi: *See—*
Oguchi, Satoshi; Ishihara, Masamichi; Ito, Kazuya; Murakami, Gen; Anjoh, Ichiro; Sakuta, Toshiyuki; Yamaguchi, Yasunori; Kasama, Yasuhiro; Udagawa, Tetsu; Miyamoto, Eiji; Matsuno, Youichi; Satoh, Hiroshi; and Nozoe, Atsusi, 5,701,031, Cl. 257-686.000.
Matsuo, Mamoru; and Yan, Zhu, to Sky Aluminium Co., Ltd. System for preparing aluminum alloy strip having improved formability and bake hardenability. 5,700,424, Cl. 266-108.000.
Matsuo, Masahito; and Yoshida, Toyohiko, to Mitsubishi Denki Kabushiki Kaisha. Data processor. 5,701,449, Cl. 395-586.000.
Matsuo, Shinta; and Sakamoto, Yoshio, to Kabushiki Kaisha Kenwood. Loudspeaker structure with a diffuser. 5,701,357, Cl. 381-199.000.
Matsuoka, Noriyuki, to Yamaichi Electronics Co., Ltd. Socket for IC package. 5,700,155, Cl. 439-266.000.
Matsushima, Takashi: *See—*
Sagiyama, Tatsuya; Baba, Fumihiko; Saito, Kaname; Matsushima, Takashi; and Iizuka, Hitoshi, 5,700,951, Cl. 73-11.080.
Matsushita Electric Industrial Co., Ltd.: *See—*
Deguchi, Hironori; and Shimada, Toshiyuki, 5,701,310, Cl. 371-30.000.
Fukui, Masahiro, 5,701,255, Cl. 364-491.000.
Ikoma, Munehisa; Akutsu, Norikatsu; Enokido, Masashi; Yoshii, Fumihiko; Kaiya, Hideo; and Tsuda, Shingo, 5,700,596, Cl. 429-206.000.
Itou, Toshifumi; Shimazaki, Hiromitsu; Arita, Masaaki; and Horinouchi, Shougo, 5,701,129, Cl. 343-873.000.
Kaneko, Katsuyuki, 5,701,509, Cl. 395-800.000.
Kashiwagi, Yoshinari; Umetani, Makoto; Kataoka, Hidenao; Inoue, Kenji; Nakamura, Shoji; and Morimoto, Satoru, 5,700,307, Cl. 65-374.100.
Ohmori, Koichi; Yamamoto, Toshiyoshi; Matsuda, Yuji; Tanji, Yoshihiko; and Yuuzu, Takayoshi, 5,701,011, Cl. 250-370.090.
Okajima, Michio; and Tohda, Takao, 5,700,591, Cl. 428-690.000.
Okumura, Hideki; Sakamoto, Kazunori; Kobata, Kiyoshi; and Kubota, Kazunori, 5,701,225, Cl. 360-132.000.
Okuyama, Kojiro; Shimoyama, Koji; Kawashima, Syunichiro; and Kugimiya, Koichi, 5,700,745, Cl. 501-134.000.
Watanabe, Masaru, 5,700,325, Cl. 118-411.000.
Yoneyama, Akira, 5,701,386, Cl. 386-909.000.
Matsushita Electric Works, Ltd.: *See—*
Ogawa, Hitoshi, 5,699,616, Cl. 30-201.000.
Matsuura, Kazuya: *See—*
Usui, Hirotake; Matsuura, Kazuya; and Nitta, Shin, 5,700,422, Cl. 266-94.000.
Matsuura, Munenori: *See—*
Hiwatashi, Yutaka; Matsuno, Koji; Takahashi, Akira; and Matsuura, Munenori, 5,700,073, Cl. 303-146.000.
Matsuura, Sadahiro; Satou, Shigeru; Kondou, Yasuhiro; and Igarashi, Yoshiaki, to Matshushita Electric Industrial Co., Ltd. Control system for an induction motor. 5,701,066, Cl. 318-808.000.
Matsuura, Yoshinori: *See—*
Masuda, Shinichi; Kumaki, Satoshi; and Matsuura, Yoshinori, 5,701,267, Cl. 365-201.000.
Mattel, Inc.: *See—*
Fritzinger, Daniel D.; and Hall, Craig R., 5,699,869, Cl. 180-65.500.
Matumori, Hiroyuki: *See—*
Oshima, Hironobu; and Matumori, Hiroyuki, 5,699,786, Cl. 128-200.210.
Matuura, Takeaki: *See—*
Ishiyama, Masaaki; Matuura, Takeaki; Mihoya, Takashi; Fujimatsu, Shinya; Utsugi, Masayoshi; and Iibuchi, Kouichi, 5,700,867, Cl. 524-539.000.
Matviya, Thomas M.: *See—*
Doughty, David T.; Hayden, Richard A.; Cobes, John W., III; and Matviya, Thomas M., 5,700,436, Cl. 423-210.000.
Maubray, Daniel, to Valeo Systemes D'Essuyage. Screen wiper blade having a flexible deflector fastened on the grippers which hold the wiping strip of the blade. 5,699,583, Cl. 15-250.201.
Max-Planck-Gesellschaft zur Forderung der Wissenschaften E.V.: *See—*
Hirth, Klaus Peter; Schwartz, Donna Pruess; Mann, Elaina; Shawver, Laura Kay; Kéri, György; Székely, István; Bajor, Tamás; Haimichael, Janis; Orfi, László; Levitzki, Alex; Gazit, Aviv; Ullrich, Axel; and Lammers, Reiner, 5,700,823, Cl. 514-380.000.
May, Galen J.: *See—*
Hull, Harold L.; May, Galen J.; and May, John J., 5,701,118, Cl. 340-638.000.
May, John J.: *See—*
Hull, Harold L.; May, Galen J.; and May, John J., 5,701,118, Cl. 340-638.000.
May, John W.: *See—*
Bucks, Rodney R.; Dwyer, Patricia A.; Tombs, Thomas N.; Vreeland, William B.; Zeman, Robert E.; and May, John W., 5,701,567, Cl. 399-302.000.
Mayberry, Terry R.: *See—*
Larson, Glen M.; and Mayberry, Terry R., 5,701,380, Cl. 385-134.000.
Mayell, Robert James; and Kramer, Richard Alan, to Schlumberger Industries, Inc. Isolated current shunt transducer. 5,701,253, Cl. 364-483.000.
Mayfield, Kevin B.: *See—*
Maloney, Christopher W.; Jackson, Brian D.; Mayfield, Kevin B.; Mills, Mark A.; and Tracy, Kent A., 5,701,453, Cl. 395-602.000.

Maylon, Gary Joseph, to Alabama Metal Industires Corporation. Stucco arch casing bead. 5,699,638, Cl. 52-86.000.
Mayo Foundation for Medical Education and Research: *See—*
Seward, James Bernard; and Tajik, Abdul Jamil, 5,699,805, Cl. 128-662.060.
Mays, David L.: *See—*
Goldberg, Ira B.; Mays, David L.; and Moormann, Laurel A., 5,701,083, Cl. 324-642.000.
Mazda Motor Corporation: *See—*
Fujita, Makoto; Yamamoto, Yukio; Sakate, Nobuo; and Hirabara, Shoji, 5,701,576, Cl. 419-29.000.
Kyogoku, Makoto; Iwakuni, Hideharu; and Takami, Akihide, 5,700,747, Cl. 502-66.000.
McAnally, Charles W. Well pumping system and installation method. 5,699,858, Cl. 166-382.000.
McAteer, Colin H.; Davis, Robert D., Sr.; and Calvin, Joel R., to Reilly Industries, Inc. Process for preparing quinoline bases. 5,700,942, Cl. 546-181.000.
McBreen, James R.: *See—*
Alferness, Merwin H.; Criswell, Peter Bradley; Johnson, David Randal; and McBreen, James R., 5,701,316, Cl. 371-53.000.
McCandish, Elizabeth: *See—*
Jakubicki, Gary; McCandish, Elizabeth; Zyzyck, Len; and Drapier, Julien, 5,700,773, Cl. 510-426.000.
McClelland, Robert J.: *See—*
Hall, Kenneth B.; McClelland, Robert J.; and Auxier, Thomas A., 5,700,131, Cl. 416-97.00R.
McClure, David Charles, to SGS-Thomson Microelectronics, Inc. Pipelined chip enable control circuitry and methodology. 5,701,275, Cl. 365-233.000.
McClure, Richard C., to Fluidmaster, Inc. Float-controlled dual flush valve. 5,699,563, Cl. 4-325.000.
McConnell, Von K., to Bell Atlantic Network Services, Inc. Telecommunications service creation apparatus and method. 5,701,419, Cl. 395-227.000.
McCowin, Peter D., to Boeing Company, The. Thermoplastic multi-tape application head. 5,700,347, Cl. 156-425.000.
McCue, Daniel Lawrence, III: *See—*
Webster, Marc W.; Saraswat, Vijay A.; Fromherz, Markus P. J.; Austin, John C.; Rulli, Paul A.; and McCue, Daniel Lawrence, III, 5,701,557, Cl. 399-77.000.
McCullough, Francis Patrick. Flexible biregional carbonaceous fiber, articles made from biregional carbonaceous fibers, and method of manufacture. 5,700,573, Cl. 428-364.000.
McDevitt, Charles Joseph, Jr. Plastic rebar harness. 5,699,642, Cl. 52-719.000.
McDonald, Edward A.: *See—*
Kirkland, James B., Jr.; and McDonald, Edward A., 5,701,422, Cl. 395-309.000.
McDonald, Marlene M.: *See—*
Moynihan, Edward R.; Gailus, David W.; Palifka, Robert G.; Hoisington, Paul A.; Hine, Nathan P.; Adams-Brady, David; Biggs, Melvin L.; McDonald, Marlene M.; Barss, Steven H.; Mackay, Diane; Paulson, Bruce A.; and Mackay, Stephen C., 5,701,148, Cl. 347-92.000.
McDonald, Paul Thomas: *See—*
Dekeyser, Mark Achiel; and McDonald, Paul Thomas, 5,700,831, Cl. 514-489.000.
McDonald, Steven M.: *See—*
Jost, Mark E.; Hansen, David J.; and McDonald, Steven M., 5,700,732, Cl. 438-401.000.
McDonnell Douglas Corporation: *See—*
Edberg, Donald L., 5,701,113, Cl. 335-285.000.
Jacobs, Jack H.; Thomas, Matthew M.; Grosskrueger, Duane D.; Carpenter, Bernie F.; and Perry, Alan R., 5,700,337, Cl. 156-64.000.
McDowall, Debra Jean; Sawyer, Lawrence Howell; Wright, Robert David; and Varona, Eugenio, to Kimberly-Clark Worldwide, Inc. Liquid distribution layer for absorbent articles. 5,700,254, Cl. 604-378.000.
McElroy, Marlene D., deceased (by William D. McElroy, executor); Helinski, Donald R.; Wood, Keith V.; De Wet, Jeffrey R.; Ow, David W.; and Howell, Stephen H., to University of California, The Regents of the. Recombinantly produced *Coleoptera luciferase* and fusion proteins thereof. 5,700,673, Cl. 435-189.000.
McElroy, William D., executor: *See—*
McElroy, Marlene D., deceased; Helinski, Donald R.; Wood, Keith V.; De Wet, Jeffrey R.; Ow, David W.; and Howell, Stephen H., 5,700,673, Cl. 435-189.000.
McEvoy, Noel: *See—*
Stein, Götz; McEvoy, Noel; Lehmann, Ernst; and Tarchini, Marcello, 5,699,735, Cl. 101-219.000.
McGrath, Stephen F.; and Shaw, Leonard L., to United States of America, Air Force. Aircraft cavity acoustic resonance suppression system. 5,699,981, Cl. 244-1.00N.
McGugan, Colin A. Storage tank water heater tempering system. 5,701,387, Cl. 392-456.000.
McGuire, Katherine M.; and Ward, Mike A., to Littelfuse, Inc. Process for manufacturing an electrical device comprising a PTC element. 5,699,607, Cl. 29-612.000.
McGuire, Timothy W., Jr.: *See—*
Capson, Brian; Cherry, Wes; Devaan, Jon; Duncan, Chris; Fowkes, Raymond E.; Graham, Christopher E.; James, Lisa R.; and McGuire, Timothy W., Jr., 5,701,499, Cl. 395-764.000.
McKenzie, Jeffrey S.: *See—*
Zander, Richard A.; and McKenzie, Jeffrey S., 5,700,303, Cl. 51-309.000.
McKinnon, Donald C., to Ferret Instruments, Inc. Battery tester with load temperature detection. 5,700,089, Cl. 374-142.000.
McMaster, Harold A.: *See—*
Maltby, Robert E., Jr.; McMaster, Harold A.; Breno, Philip J.; Buckingham, James W.; and Vild, Michael J., 5,700,306, Cl. 65-182.200.
McMaster, Michael George: *See—*
Chong, Ku Ho; Crockett, Charles Hayden, Jr.; Dunn, Stephen Alan, deceased; Hoebener, Karl Grant; and McMaster, Michael George, 5,699,613, Cl. 29-852.000.
McMichael, Andre James; Nixon, Douglas Fraser; Townsend, Alain Robert Michael; and Gotch, Frances Margaret, to Medical Research Council. HIV-1 core protein fragments. 5,700,469, Cl. 424-208.100.
McMichael, Andrew James; Nixon, Douglas Fraser; and Townsend, Alain Robert Michael, to United Biomedical, Inc. HIV-1 gag cytotoxic T-lymphocyte epitope and method of use. 5,700,635, Cl. 435-5.000.
McNair, John Duncan: *See—*
Yung, Jimmy Siu Yim; and McNair, John Duncan, 5,699,718, Cl. 99-292.000.
McNeil (Ohio) Corporation: *See—*
Bevington, Jack T., 5,700,138, Cl. 417-366.000.
McNicol, Melvin Adam, to ICI Canada Inc. Broken-emulsion and process for recycling emulsion explosives. 5,700,970, Cl. 102-332.000.
McTeer, Allen, to Micron Technology, Inc. Method for increased metal interconnect reliability in situ formation of titanium aluminide. 5,700,718, Cl. 437-192.000.
McWilliams, Joseph Anthony, to Ceramaspeed Limited. Method of manufacturing a radiant electric heater. 5,699,606, Cl. 29-611.000.
MDI Instruments, Inc.: *See—*
Combs, Jerome T.; Busey, Hugh W.; and Ukraincik, Kresimir, 5,699,809, Cl. 128-746.000.
Mead Corporation, The: *See—*
Blin, Patrick; Daniel, Jean-Yves; and Saulas, Alain, 5,699,957, Cl. 229-117.120.
Mears, Lawrence N.: *See—*
Scarazzo, Christopher; and Mears, Lawrence N., 5,700,493, Cl. 425-116.000.
MEC Co., Ltd.: *See—*
Nakagawa, Toshiko, 5,700,389, Cl. 252-79.200.
Meckstroth, Richard J., to Ford Global Technologies, Inc. System for powering rotating accessories of an internal combustion engine. 5,700,212, Cl. 474-70.000.
Medar, Inc.: *See—*
Chatterjee, Chanchal, 5,701,179, Cl. 356-376.000.
Mederski, Werner: *See—*
Osswald, Mathias; Dorsch, Dieter; Mederski, Werner; Wilm, Claudia; Schmitges, Claus J.; and Christadler, Maria, 5,700,807, Cl. 514-291.000.
Medical Research Council: *See—*
McMichael, Andre James; Nixon, Douglas Fraser; Townsend, Alain Robert Michael; and Gotch, Frances Margaret, 5,700,469, Cl. 424-208.100.
Mega Chips Corporation: *See—*
Takata, Akira; Hikawa, Tetsuo; Sawada, Takashi; Yiu, Tom Dang-hsing; and Ni, Ful-Long, 5,700,975, Cl. 174-52.400.
Meguro, Satoshi; Uchibori, Kiyofumi; Suzuki, Norio; Motoyoshi, Makoto; Koike, Atsuyoshi; Yamanaka, Toshiaki; Sakai, Yoshio; Kaga, Toru; Hashimoto, Naotaka; Hashimoto, Takashi; Honjou, Shigeru; and Minato, Osamu, to Hitachi, Ltd. Semiconductor integraed circuit device. 5,700,705, Cl. 437-52.000.
Meguro, Satoshi: *See—*
Ikeda, Shuji; Meguro, Satoshi; Hashiba, Soichiro; Kuramoto, Isamu; Koike, Atsuyoshi; Sasaki, Katsuro; Ishibashi, Koichiro; Yamanaka, Toshiaki; Hashimoto, Naotaka; Moriwaki, Nobuyuki; Takahashi, Shigeru; Hiraishi, Atsushi; Kobayashi, Yutaka; and Yukutake, Seigou, 5,700,704, Cl. 437-52.000.
Mehra, Vinodkumar; and Fish, Robert Benham, Jr., to Du Pont de Nemours, E. I., and Company. Process for making laminar articles. 5,700,412, Cl. 264-143.000.
MEI Research, Inc.: *See—*
Hurst, William D., 5,700,505, Cl. 426-312.000.
Meier, Albert H.: *See—*
Cincotta, Anthony H.; Meier, Albert H.; and Wilson, John M., 5,700,795, Cl. 514-200.000.
Cincotta, Anthony H.; and Meier, Albert H., 5,700,800, Cl. 514-250.000.
Meier, Heinrich: *See—*
Mittendorf, Joachim; Fey, Peter; Junge, Bodo; Kaulen, Johannes; Laak, Kai van; Meier, Heinrich; and Schohe-Loop, Rudolf, 5,700,948, Cl. 548-531.000.
Meiji Seika Kaisha, Ltd.: *See—*
Makishima, Shinichi; and Mochizuki, Keizo, 5,700,508, Cl. 426-441.000.
Meise, Hansjorg, to Barmag AG. Apparatus and method for the thermal treatment of fibers. 5,700,490, Cl. 425-72.200.
Meli, Fausto; and Piciaccia, Stefano, to Pirelli Cavi S.p.A. Amplified telecommunication system for wavelength-division multiplexing transmissions capable of limiting variations in the output power. 5,701,194, Cl. 359-341.000.
Melinyshyn, Matthew John. Portable camping equipment hanger. 5,699,991, Cl. 248-332.000.

Melito, M. Anthony; and Rebres, Robert P., to Black & Decker Inc. Vacuum cleaner with improved suction inlet. 5,699,586, Cl. 15-383.000.
Meltsch, Hans-Juergen: *See—*
Froehlich, Franz-Fr; Kluwe, Wolf; and Meltsch, Hans-Juergen, 5,700,012, Cl. 277-66.000.
Melville, Charles D.: *See—*
Kollin, Joel S.; Johnston, Richard S.; and Melville, Charles D., 5,701,132, Cl. 345-8.000.
Mendoza, Leopoldo G.: *See—*
Pahuski, Edward E.; Dimond, Randall L.; Priest, John H.; Zandt, Lisa; Stebnitz, Kathleen K.; and Mendoza, Leopoldo G., 5,700,645, Cl. 435-6.000.
Mengle, Jay S.; Mitchell, Baker A., Jr.; and Mengle, Marsha A., to Holiday Innovations, Inc. Decorative light assembly. 5,700,081, Cl. 362-123.000.
Mengle, Marsha A.: *See—*
Mengle, Jay S.; Mitchell, Baker A., Jr.; and Mengle, Marsha A., 5,700,081, Cl. 362-123.000.
Menhennett, Herbert E.; Barlage, William Berdell, III; and Nowak, Michael T., to BPM Technology, Inc. Process of and apparatus for making a three-dimensional article. 5,700,406, Cl. 264-40.400.
Mennemeier, Larry M.: *See—*
Glew, Andrew F.; Mennemeier, Larry M.; Peleg, Alexander D.; Bistry, David; Mittal, Millind; Dulong, Carole; Kowashi, Eiichi; Eitan, Benny; Lin, Derrick; and Vakkalagadda, Ramamohan R., 5,701,508, Cl. 395-800.000.
Menton, Janet Linda: *See—*
Fyson, John Richard; Rider, Christopher Barrie; Coldrick, Philip; and Menton, Janet Linda, 5,701,545, Cl. 396-626.000.
Meoni, Frank, to Fast Action, Inc. Casino random number card covering game. 5,700,009, Cl. 273-269.000.
Mercedes-Benz AG: *See—*
Kiel, Bernd; and Unser, Karl-Heinz, 5,700,06[illegible], Cl. 303-961.000.
Koch, Norbert; Böhm, Kurt; Schefcsik, Nikolaus; and Eipper, Jürgen, 5,699,884, Cl. 188-196.00B.
Kosik, Franz; and Wömer, Günter, 5,700,227, Cl. 477-171.000.
Merck & Co, Inc.: *See—*
Claremon, David A.; Liverton, Nigel; and Selnick, Harold G., 5,700,797, Cl. 514-221.000.
Merck & Co., Inc.: *See—*
Rossen, Kai, 5,700,364, Cl. 205-425.000.
Merck Patent Gesellschaft mit Beschrankter Haftung: *See—*
Gericke, Rolf; Dorsch, Dieter; Baumgarth, Manfred; Minck, Klaus-Otto; and Beier, Norbert, 5,700,839, Cl. 514-618.000.
Osswald, Mathias; Dorsch, Dieter; Mederski, Werner; Wilm, Claudia; Schmitges, Claus J.; and Christadler, Maria, 5,700,807, Cl. 514-291.000.
Merck Sharp & Dohme, Ltd.: *See—*
Curtis, Neil Roy; Kulagowski, Janusz Jozef; and Leeson, Paul David, 5,700,802, Cl. 514-253.000.
Kulagowski, Janusz Jozef, 5,700,941, Cl. 546-122.000.
Leeson, Paul David; Smith, Adrian Leonard; Ridgill, Mark Peter; Baker, Raymond; Curtis, Neil Roy; and Kulagowski, Janusz Jozef, 5,700,809, Cl. 514-300.000.
Mercury Interactive Corporation: *See—*
Weinbaum, David; Bar-On, Daniel; and Tamir, Yoav, 5,701,139, Cl. 345-145.000.
Meredith, Sheldon Kent; and Steele, Walter Brian, to Radio Frequency Systems, Inc. Modular interconnect matrix for matrix connection of a plurality of antennas with a plurality of radio channel units. 5,701,596, Cl. 455-103.000.
Merle, Gabriel, to Packinox. Bank of plates for heat exchanger and method of assembling such a bank of plates. 5,699,856, Cl. 165-166.000.
Merrell Pharmaceuticals Inc.: *See—*
Carr, Albert A.; Kane, John M.; and Hay, David A., 5,700,812, Cl. 514-317.000.
Carr, Albert A.; Kane, John M.; and Hay, David A., 5,700,813, Cl. 514-317.000.
Merten, Gerhard; and Fischer, Frank, to DBT Deutsche Bergbau-Technik GmbH. Guide and drive arrangement for the winning machines of mineral winning installations. 5,700,061, Cl. 299-43.000.
Messner, Mark: *See—*
Bellows, William; Nelson, Paul; and Messner, Mark, 5,700,201, Cl. 472-103.000.
Metal Technology, Inc.: *See—*
Steblianko, Valerij Leontievich; and Riabkov, Vitalij Makrovich, 5,700,366, Cl. 205-87.000.
Methodist Hospital of Indiana: *See—*
Critser, John K.; and Gao, D. Y., 5,700,632, Cl. 435-2.000.
Metz, Barbara A.: *See—*
Hughes, Kenneth E.; Masterson, David C.; Fink, David J.; Metz, Barbara A.; Pickett, Gordon E.; Gemmer, Paul M.; and Brody, Richard S., 5,700,353, Cl. 162-143.000.
Virnelson, Kevin M.; Hughes, Kenneth E.; Masterson, David C.; Fink, David J.; Metz, Barbara A.; Pickett, Gordon E.; Gemmer, Paul M.; and Brody, Richard S., 5,700,354, Cl. 162-143.000.
Metzger, Jörg; Wiesmüller, Karl-Heinz; and Jung, Günther, to Hoechst Aktiengesellschaft. N-acyl-S-(2-hydroxyalkyl) cysteines, their preparation and their use as intermediates for the preparation of synthetic immuno-adjuvants and synthetic vaccines. 5,700,910, Cl. 530-338.000.
Metzler, Joel: *See—*
Hykes, Timothy W.; and Metzler, Joel, 5,700,186, Cl. 451-406.000.

Mey, William: *See—*
Stephany, Thomas M.; Mey, William; and Furlani, Edward P., 5,701,552, Cl. 399-53.000.
Meyer, Gregory Phillip: *See—*
Goach, Kenneth Edmund, Jr.; Meyer, Gregory Phillip; and Sims, Jeffrey Scott, 5,701,498, Cl. 395-762.000.
Meyer, Roy A.: *See—*
Young, James E.; and Meyer, Roy A., 5,700,106, Cl. 404-8.000.
Meyers, Mark M., to Eastman Kodak Company. Color separating diffractive optical array and image sensor. 5,701,005, Cl. 250-226.000.
Meynckens, Jean-Pierre: *See—*
Zivkovic, Alexandre; Meynckens, Jean-Pierre; and Somerhausen, Bernard, 5,700,309, Cl. 75-252.000.
MG Generon, Inc.: *See—*
Bowman, Reid Henry; and Goltz, H. Robert, 5,700,310, Cl. 95-45.000.
MGS Machine Corporation: *See—*
Bahr, Mel J.; and Bahr, Timothy A., 5,700,004, Cl. 271-171.000.
MHD Corporation: *See—*
Harding, Claude J., 5,699,922, Cl. 215-208.000.
Mi, James O.: *See—*
Fazio, Albert; Atwood, Gregory E.; Mi, James O.; and Ruby, Paul, 5,701,266, Cl. 365-185.030.
Miba Sintermetall Aktiengesellschaft: *See—*
Derflinger, Karl; Schmid, Herbert; and Dickinger, Johann, 5,701,574, Cl. 419-26.000.
Michael Foods, Inc.: *See—*
Hale, Kirk K., Jr., 5,700,504, Cl. 426-240.000.
Michel, Martinez: *See—*
Pitot, Christian; and Michel, Martinez, 5,701,315, Cl. 371-51.100.
Michel, Patrick: *See—*
Benayoun, Alain; Fieschi, Jacques; Michel, Patrick; and LePennec, Jean-Francois, 5,701,468, Cl. 395-612.000.
Michod, Carol S.: *See—*
Legvold, Vernon J.; Liu, Julia; Michod, Carol S.; Ng, Chan Yiu; Sherman, William G., II; Steffan, Jeffrey R.; and Van Gundy, Steven R., 5,701,429, Cl. 395-441.000.
Micklish, William H. Side rail mounted bicycle rack for pickup trucks. 5,699,945, Cl. 224-402.000.
Micro-Tec Company Ltd.: *See—*
Sano, Yasushi, 5,699,732, Cl. 101-127.000.
Microbar Systems, Inc.: *See—*
Weinberg, Richard S.; and Thomas, James W., 5,700,401, Cl. 261-27.000.
Micron Communications, Inc.: *See—*
Tuttle, Mark E.; Mousseau, Joseph P.; and Cirino, Clay L., 5,700,981, Cl. 174-250.000.
Micron Technology, Inc.: *See—*
Becker, David S.; and Keller, David J., 5,700,580, Cl. 428-446.000.
Jost, Mark E.; Hansen, David J.; and McDonald, Steven M., 5,700,732, Cl. 438-401.000.
Juengling, Werner, 5,700,706, Cl. 437-52.000.
Lee, Roger R.; and Dennison, Charles H., 5,700,730, Cl. 438-298.000.
Manning, Monte, 5,700,727, Cl. 438-156.000.
Manning, Monte, 5,700,733, Cl. 438-439.000.
McTeer, Allen, 5,700,718, Cl. 437-192.000.
Sandhu, Gurtej S.; and Doan, Trung Tri, 5,700,180, Cl. 451-5.000.
Sharan, Sujit; and Nagabushnam, Varatharajan, 5,700,716, Cl. 437-190.000.
Tang, Sanh, 5,701,036, Cl. 257-750.000.
Microsoft Corporation: *See—*
Atkinson, Robert G., 5,701,424, Cl. 395-353.000.
Brandli, Stephen A.; and Jones, William P., 5,701,469, Cl. 395-613.000.
Capson, Brian; Cherry, Wes; Devaan, Jon; Duncan, Chris; Fowkes, Raymond E.; Graham, Christopher E.; James, Lisa R.; and McGuire, Timothy W., Jr., 5,701,499, Cl. 395-764.000.
Dalal, Ketan K.; and Hecht, Stephen Charles, 5,701,461, Cl. 395-604.000.
Kaplan, David L.; and Miller, Andrew R., 5,701,460, Cl. 395-603.000.
Kiernan, Casey L.; and Jancke, Gavin, 5,701,137, Cl. 345-119.000.
Smith, Matthew W., 5,701,511, Cl. 395-806.000.
Whitney, Alan; Neeman, Yuval; Koneru, Sudheer; Shah, Milan; Cook, Peter J.; and Miller, Arnold S., 5,701,462, Cl. 395-610.000.
Microsoft Corporation, Inc.: *See—*
Dunn, John C.; and Foltz, Forrest C., 5,701,491, Cl. 395-712.000.
Microstar Laboratories: *See—*
Lewis, Ian D.; and Hauck, Preston A., 5,701,417, Cl. 395-200.160.
Mihailovic, Vladan, to 2 M Tool Co., Inc. Meat-comminuting machine with improved vacuum discharge mechanism. 5,699,970, Cl. 241-82.500.
Mihara, Yuji: *See—*
Hirai, Hiroyuki; and Mihara, Yuji, 5,700,622, Cl. 430-203.000.
Mihoya, Takashi: *See—*
Ishiyama, Masaaki; Matuura, Takeaki; Mihoya, Takashi; Fujimatsu, Shinya; Utsugi, Masayoshi; and Iibuchi, Kouichi, 5,700,867, Cl. 524-539.000.
Miike, Akira: *See—*
Tadano, Toshio; Miike, Akira; and Umemoto, Jun, 5,700,652, Cl. 435-14.000.
Mikawa, Takashi: *See—*
Yamagishi, Masahiro; Ueda, Makoto; Takai, Yukie; Yasuda, Mari; and Mikawa, Takashi, 5,700,670, Cl. 435-128.000.
Miki, Yousuke: *See—*

Sugimoto, Toshihiko; Miyaake, Chiharu; and Miki, Yousuke, 5,700,562, Cl. 428-327.000.
Miller, Andrew R.: *See—*
Kaplan, David L.; and Miller, Andrew R., 5,701,460, Cl. 395-603.000.
Miller, Arnold S.: *See—*
Whitney, Alan; Neeman, Yuval; Koneru, Sudheer; Shah, Milan; Cook, Peter J.; and Miller, Arnold S., 5,701,462, Cl. 395-610.000.
Miller, David Darrell: *See—*
Eshelman, Lyn Marie; Miller, David Darrell; and Levy, David Howard, 5,700,608, Cl. 430-20.000.
Miller, Derek; Weitkamp, Thomas Edward; and Brown, Steve, to Riverwood International Corporation. Selector assembly. 5,699,651, Cl. 53-448.000.
Miller, E. Anthony: *See—*
Dunbar, Lance A.; and Miller, E. Anthony, 5,700,182, Cl. 451-45.000.
Miller, Gabriel L.; and Wagner, Eric R., to Lucent Technologies Inc. Cascaded multiplying current mirror driver for LED's. 5,701,133, Cl. 345-46.000.
Miller, Gary Lynn; Goler, Vernon Bernard; and Litch, Timothy Ernest, to Motorola, Inc. Pin and status bus structure for an integrated circuit. 5,701,421, Cl. 395-309.000.
Miller, John C. Process for removal of H2S from gas processing streams. 5,700,438, Cl. 423-228.000.
Miller, John David: *See—*
Falace, Joseph Philip; and Miller, John David, 5,700,125, Cl. 414-276.000.
Miller, Maria L.: *See—*
Massman, Brent D.; and Miller, Maria L., 5,700,475, Cl. 424-408.000.
Miller, Robert Dennis: *See—*
Hedrick, Jeffrey Curtis; Hedrick, James Lupton; Liao, Yun-Hsin; Miller, Robert Dennis; and Shih, Da-Yuan, 5,700,844, Cl. 521-77.000.
Miller, Scott; Brady, Don; Williamson, Steven; Luftig, Steven; and Musto, Dominick, to Symtron Systems, Inc. Pilot module assembly. 5,700,141, Cl. 431-125.000.
Miller, Scott; Brady, Don; Williamson, Steven; Luftig, Steven; and Musto, Dominick, to Symtron Systems, Inc. Liquid pilot assembly. 5,700,142, Cl. 431-125.000.
Millett, Ronald P.; Tuck, Robin P.; Dennis, Blaine S.; and Robertson, David O., to Novell, Inc. Method and apparatus for rapid full text index creation. 5,701,459, Cl. 395-603.000.
Mills, Mark A.: *See—*
Maloney, Christopher W.; Jackson, Brian D.; Mayfield, Kevin B.; Mills, Mark A.; and Tracy, Kent A., 5,701,453, Cl. 395-602.000.
Mills, Shannon E.; Shaffer, Randy; Freeman, Michael T.; Plamondon, Thomas J.; and Oakes, Barry L., Jr., to United States of America, Air Force. Air controlled sterile irrigation system (ACSIS). 5,700,147, Cl. 433-98.000.
Mimier, Robert F. Method of playing a dice wagering game. 5,700,010, Cl. 273-292.000.
Mimura, Tomio: *See—*
Fujii, Masumi; Suda, Taiichiro; Hotta, Yoshitsugu; Kitamura, Koichi; Jinno, Yukihiro; Mimura, Tomio; Shimojo, Shigeru; Iijima, Masaki; and Mitsuoka, Shigeaki, 5,700,437, Cl. 423-220.000.
Min, David. Garment for audio stimulation of fetus. 5,699,558, Cl. 2-48.000.
Min, Yong-Ki: *See—*
Ji, Jeong-Beom; and Min, Yong-Ki, 5,701,192, Cl. 359-224.000.
Minagawa, Kazuji: *See—*
Yonekawa, Masao; Majima, Yoshihiro; Miwa, Makoto; Minagawa, Kazuji; and Oi, Kiyotoshi, 5,699,772, Cl. 123-497.000.
Minami, Masaki: *See—*
Ikai, Keizo; Minami, Masaki; and Matsuno, Mitsuo, 5,700,400, Cl. 252-513.000.
Minato, Osamu: *See—*
Meguro, Satoshi; Uchibori, Kiyofumi; Suzuki, Norio; Motoyoshi, Makoto; Koike, Atsuyoshi; Yamanaka, Toshiaki; Sakai, Yoshio; Kaga, Toru; Hashimoto, Naotaka; Hashimoto, Takashi; Honjou, Shigeru; and Minato, Osamu, 5,700,705, Cl. 437-52.000.
Minck, Klaus-Otto: *See—*
Gericke, Rolf; Dorsch, Dieter; Baumgarth, Manfred; Minck, Klaus-Otto; and Beier, Norbert, 5,700,839, Cl. 514-618.000.
Minemura, Katsuyoshi: *See—*
Kokubo, Hiroyasu; and Minemura, Katsuyoshi, 5,700,929, Cl. 536-63.000.
Minich, Arthur P.; Kappel, David W.; Hargis, David E.; and Assa, Shlomo, to Proxima Corporation. Laser illuminated image producing system and method of using same. 5,700,076, Cl. 353-31.000.
Minick, Steven E.; Segerson, Judith A.; and Rednour, William C., to Abbott Laboratories. Ambulatory IV pump transport apparatus. 5,700,257, Cl. [illegible].
Minnesota Mining and Manufacturing Company: *See—*
Dreyer, John F., Jr.; Bradshaw, Thomas L; Burns, David M.; Pavelka, Lee A.; and Orensteen, Bruce D., 5,700,077, Cl. 362-32.000.
Hagen, Donald F.; Hart, Kenneth M.; and Johnson, Glenn D., 5,700,375, Cl. 210-651.000.
Jackson, Byron M., 5,699,593, Cl. 24-445.000.
Speckhard, Thomas A., 5,701,561, Cl. 399-233.000.
Stoetzel, William L.; and Culler, Scott R., 5,700,302, Cl. 51-295.000.
Minola, Antonio. Self-locking nut. 5,700,121, Cl. 411-432.000.
Minolta Co., Ltd.: *See—*
Honda, Tsutomu; Itoh, Hisanori; Ueno, Takuya; Mori, Junji; Matsumoto, Hiroyuki; Hasegawa, Yasushi; and Kajita, Hideo, 5,701,518, Cl. 396-29.000.
Kanazawa, Masaharu; Natsuhara, Toshiya; Hara, Kazuyoshi; and Tanaka, Yasuo, 5,701,569, Cl. 399-308.000.

Matsumoto, Hiroyuki, 5,701,204, Cl. 359-684.000.
Okatani, Toru, 5,701,548, Cl. 399-8.000.
Tanaka, Yoshiharu; Tanii, Junichi; and Ono, Katsuhiro, 5,701,531, Cl. 396-319.000.
Mirigian, Gregory E.; Van, Nga Thi; and Gia, Son M., to Target Therapeutics, Inc. Complex coils having fibered centers. 5,700,258, Cl. 606-1.000.
Miroewski, Michael: *See—*
Lucas, Eric E.; Vitamonio, Marc L.; and Miroewski, Michael, 5,699,719, Cl. 99-299.000.
Mita Industrial Co., Ltd.: *See—*
Yoshiuchi, Katsuhiro; Kageyama, Hiroshi; and Nishi, Yoko, 5,701,573, Cl. 399-384.000.
Mitani, Shinichi: *See—*
Honda, Takaaki; and Mitani, Shinichi, 5,700,992, Cl. 219-466.000.
Mitchell, Baker A., Jr.: *See—*
Mengle, Jay S.; Mitchell, Baker A., Jr.; and Mengle, Marsha A., 5,700,081, Cl. 362-123.000.
Mitchell, Michele Follen: *See—*
Richards-Kortum, Rebecca; Pitris, Costas; and Mitchell, Michele Follen, 5,699,795, Cl. 128-634.000.
Mitsubishi Chemical Corporation: *See—*
Tanaka, Minoru; and Hui, Chi Wai, 5,700,432, Cl. 422-146.000.
Yamagishi, Masahiro; Ueda, Makoto; Takai, Yukie; Yasuda, Mari; and Mikawa, Takashi, 5,700,670, Cl. 435-128.000.
Mitsubishi Denki Kabushiki Kaisha: *See—*
Azuma, Tadahiro, 5,699,775, Cl. 123-520.000.
Hayafuji, Norio; and Kawazu, Zempei, 5,701,321, Cl. 372-44.000.
Hidaka, Hideto; and Hirose, Masakazu, 5,701,090, Cl. 326-32.000.
Hosotani, Osamu, 5,701,506, Cl. 395-800.000.
Kasahara, Michiaki; Kawano, Hazime; Inami, Kazuyoshi; Muroi, Kohichi; and Iyama, Yoshitada, 5,701,107, Cl. 333-164.000.
Masuda, Shinichi; Kumaki, Satoshi; and Matsuura, Yoshinori, 5,701,267, Cl. 365-201.000.
Matsumoto, Toshio; Baba, Hiroshi; Itoh, Kazuhiko; and Ogura, Shiro, 5,701,406, Cl. 395-182.040.
Matsumoto, Toshio; Baba, Hiroshi; Itoh, Kazuhiko; and Ogura, Shiro, 5,701,407, Cl. 395-182.050.
Matsuo, Masahito; and Yoshida, Toyohiko, 5,701,449, Cl. 395-586.000.
Nagai, Yutaka, 5,701,322, Cl. 372-46.000.
Ohira, Hideo; Murakami, Tokumichi; Asai, Kohtaro; and Shimada, Toshiaki, 5,701,158, Cl. 348-410.000.
Ohira, Hideo; Murakami, Tokumichi; Asai, Kohtaro; and Shimada, Toshiaki, 5,701,159, Cl. 348-410.000.
Sakui, Masato, 5,701,224, Cl. 360-128.000.
Tanabe, Tsuneo, 5,699,771, Cl. 123-479.000.
Tani, Takahiro, 5,701,254, Cl. 364-489.000.
Tomoe, Naohito; and Kashiwagi, Takashi, 5,701,601, Cl. 455-226.200.
Uchinami, Masanobu; Yamane, Koichi; and Fukui, Wataru, 5,699,769, Cl. 123-414.000.
Ueda, Tetsuya; Shibata, Jun; and Yama, Yomiyuki, 5,701,033, Cl. 257-704.000.
Watanabe, Hideo; Boh, Satoru; Miyata, Akira; and Shiotani, Keiichi, 5,701,403, Cl. 395-119.000.
Yamauchi, Shunji, 5,700,001, Cl. 267-224.000.
Mitsubishi Electric Engineering Co., Ltd.: *See—*
Masuda, Shinichi; Kumaki, Satoshi; and Matsuura, Yoshinori, 5,701,267, Cl. 365-201.000.
Mitsubishi Electric Semiconductor Software Co., Ltd.: *See—*
Tani, Takahiro, 5,701,254, Cl. 364-489.000.
Mitsubishi Gas Chemical Company: *See—*
Hashimoto, Toshihiro; Nakamura, Kenichi; and Takagawa, Makoto, 5,700,944, Cl. 546-327.000.
Mitsubishi Jidosha Kogyo Kabushiki Kaisha: *See—*
Muraguchi, Tomokazu; and Matsumoto, Takuya, 5,699,778, Cl. 123-[illegible].
Mitsubishi Jukogyo Kabushiki Kaisha: *See—*
Fujii, Masumi; Suda, Taiichiro; Hotta, Yoshitsugu; Kitamura, Koichi; Jinno, Yukihiro; Mimura, Tomio; Shimojo, Shigeru; Iijima, Masaki; and Mitsuoka, Shigeaki, 5,700,437, Cl. 423-220.000.
Mitsubishi Materials Corporation: *See—*
Izunome, Koji; Kawanishi, Souroku; Togawa, Shinji; Ikari, Atsushi; Sasaki, Hitoshi; and Kimura, Shigeyuki, 5,700,320, Cl. 117-19.000.
Mitsuhashi, Kenichiro, to Kabushiki Kaisha Kobe Seiko Sho. Plate fin heat exchanger and method of making thereof. 5,699,855, Cl. 165-133.000.
Mitsui, Kiyoshi: *See—*
Masui, Shohei; Oishi, Kanemitsu; and Mitsui, Kiyoshi, 5,700,416, Cl. 264-325.000.
Mitsui Petrochemical Industries, Ltd.: *See—*
Kanayama, Kouichi; and Maruko, Nobuhiro, 5,701,049, Cl. 310-359.000.
Tsutsui, Toshiyuki; Toyota, Akinori; and Kashiwa, Norio, 5,700,749, Cl. 502-117.000.
Tsutsui, Toshiyuki; Toyota, Akinori; and Kashiwa, Norio, 5,700,750, Cl. 502-117.000.
Mitsumi Electric Co., Ltd.: *See—*
Nawa, Ikuichiro, 5,699,972, Cl. 242-334.000.
Mitsuoka, Shigeaki: *See—*
Fujii, Masumi; Suda, Taiichiro; Hotta, Yoshitsugu; Kitamura, Koichi; Jinno, Yukihiro; Mimura, Tomio; Shimojo, Shigeru; Iijima, Masaki; and Mitsuoka, Shigeaki, 5,700,437, Cl. 423-220.000.
Mitsuya, Yoshihide: *See—*

Kageyama, Shuhei; Kageyama, Toshihiko; Nakazato, Youichi; and Mitsuya, Yoshihide, 5,700,101, Cl. 401-52.000.
Mittal, Millind: *See—*
Glew, Andrew F.; Mennemeier, Larry M.; Peleg, Alexander D.; Bistry, David; Mittal, Millind; Dulong, Carole; Kowashi, Eiichi; Eitan, Benny; Lin, Derrick; and Vakkalagadda, Ramamohan R., 5,701,508, Cl. 395-800.000.
Mittel, James G.: *See—*
DeLuca, Michael J.; and Mittel, James G., 5,701,312, Cl. 371-32.000.
Mittendorf, Joachim; Fey, Peter; Junge, Bodo; Kaulen, Johannes; Laak, Kai van; Meier, Heinrich; and Schohe-Loop, Rudolf, to Bayer Aktiengesellschaft. Pyrrolidine compounds and process of preparing. 5,700,948, Cl. 548-531.000.
Miura, Koji: *See—*
Araki, Ryuji; Kubota, Atsushi; Sasaki, Shinichi; and Miura, Koji, 5,701,562, Cl. 399-265.000.
Miura, Shinsuke; Itoi, Takeshi; and Yabushita, Shuichi, to Yamaichi Electronics Co., Ltd. Shock measuring method in goods transportation. 5,701,257, Cl. 364-508.000.
Miwa, Makoto: *See—*
Yonekawa, Masao; Majima, Yoshihiro; Miwa, Makoto; Minagawa, Kazuji; and Oi, Kiyotoshi, 5,699,772, Cl. 123-497.000.
Miwa, Teiichi: *See—*
Morimoto, Kiyoshi; Watanabe, Yasushi; Sanada, Yoshika; Miwa, Teiichi; and Masada, Tomoaki, 5,700,492, Cl. 425-100.000.
Miyaake, Chiharu: *See—*
Sugimoto, Toshihiko; Miyaake, Chiharu; and Mita, Yousuke, 5,700,562, Cl. 428-327.000.
Miyaguchi, Satoshi: *See—*
Nagayama, Kenichi; and Miyaguchi, Satoshi, 5,701,055, Cl. 313-504.000.
Miyairi, Kazuki, to Nissei Plastic Industrial Co., Ltd. Injection mold for molding discs. 5,700,501, Cl. 425-577.000.
Miyakawa, Futoshi; Kawamata, Masahiro; Hamada, Yoshiaki; Asao, Kosuke; and Kajikawa, Tsuneo, to Honda Giken Kogyo Kabushiki Kaisha. Structure and method for easy access to and maintenance of accessories in a vehicle without removing a power unit. 5,699,872, Cl. 180-291.000.
Miyake, Masao: *See—*
Arita, Setsuo; Ito, Tetsuo; Ohga, Yukiharu; Ueta, Hiroshi; Murata, Fumio; Miyake, Masao; and Nishizawa, Yasuo, 5,701,394, Cl. 395-11.000.
Miyake, Michael K.: *See—*
Carson, John C.; DeCaro, Robert E.; Hsu, Ying; and Miyake, Michael K., 5,701,233, Cl. 361-735.000.
Miyakoshi, Yoshinori: *See—*
Kuboyama, Kimimasa; Yokoyama, Shoji; Miyakoshi, Yoshinori; Taniguchi, Hiroya; Tsuruta, Kazuhiro; and Goto, Hisashi, 5,699,655, Cl. 53-540.000.
Miyamoto, Eiji: *See—*
Oguchi, Satoshi; Ishihara, Masamichi; Ito, Kazuya; Murakami, Gen; Anjoh, Ichiro; Sakuta, Toshiyuki; Yamaguchi, Yasunori; Kasama, Yasuhiro; Udagawa, Tetsu; Miyamoto, Eiji; Matsuno, Youichi; Satoh, Hiroshi; and Nozoe, Atsusi, 5,701,031, Cl. 257-686.000.
Miyamoto, Kazuki; Ohki, Naoyuki; Nakano, Masaki; Ushiro, Takahiro; Fukazu, Yasuo; Chaki, Atsushi; Takata, Shinichi; and Ohyoshi, Kazuhiro, to Canon Kabushiki Kaisha. Image forming apparatus with detachable process unit. 5,701,402, Cl. 395-115.000.
Miyamoto, Masayoshi: *See—*
Yamaguchi, Shiro; and Miyamoto, Masayoshi, 5,699,761, Cl. 123-73.00A.
Miyamoto, Tsuyoshi: *See—*
Nishikawa, Michinori; Miyamoto, Tsuyoshi; Kawamura, Shigeo; Yasuda, Kyouyu; Mutsuga, Yasuaki; and Matsuki, Yasuo, 5,700,860, Cl. 524-317.000.
Miyaoh, Yoshio; and Inamura, Susumu, to Ishikawa Gasket Co., Ltd. Metal laminate gasket with surface pressure adjustment mechanism. 5,700,016, Cl. 277-235.00B.
Miyasaka, Kenji: *See—*
Higuchi, Haruhiko; Miyasaka, Kenji; and Miyauchi, Norio, 5,701,278, Cl. 368-204.000.
Miyashita, Akira, to Canon Kabushiki Kaisha. Optical information recording and/or reproducing apparatus in which a reproducing light beam is modulated with at least a 100
degree of modulation. 5,701,280, Cl. 369-13.000.
Miyata, Akira: *See—*
Watanabe, Hideo; Boh, Satoru; Miyata, Akira; and Shiotani, Keiichi, 5,701,403, Cl. 395-119.000.
Miyata, Tatsuji: *See—*
Notsu, Ikurou; Matsuda, Hiroshi; Hamazaki, Nobuo; Takada, Yutaka; Miyata, Tatsuji; and Nakamura, Akira, 5,699,767, Cl. 123-323.000.
Miyauchi, Hidekazu; and Hisjima, Katsuhiro, to Nissho Corporation. Epidural catheter. 5,700,251, Cl. 604-264.000.
Miyauchi, Norio: *See—*
Higuchi, Haruhiko; Miyasaka, Kenji; and Miyauchi, Norio, 5,701,278, Cl. 368-204.000.
Miyaura, Yasuhiko, to NSK Ltd. Electric power steering apparatus. 5,699,874, Cl. 180-443.000.
Miyawaki, Mamoru: *See—*
Yuzurihara, Hiroshi; Inoue, Shunsuke; Miyawaki, Mamoru; and Matsumoto, Shigeyuki, 5,700,719, Cl. 437-193.000.
Miyazaki, Hiroaki: *See—*
Suzuki, Tatsuya; and Miyazaki, Hiroaki, 5,701,533, Cl. 396-349.000.
Miyazaki, Takahiro: *See—*
Goto, Kazushige; and Miyazaki, Takahiro, 5,700,563, Cl. 428-328.000.
Miyazaki, Takeshi; Tanaka, Kazumi; Santo, Tsuyoshi; Ohnishi, Toshikazu; Fukui, Tetsuro; and Okamoto, Tadashi, to Canon Kabushiki Kaisha. Carbocation containing cyanine-type dye. 5,700,647, Cl. 435-6.000.
Miyoshi, Hideaki, to Kaijo Corporation. Wire bonder and a bonding tool and bonding arm. 5,699,951, Cl. 228-4.500.
Mizuno, Shinobu: *See—*
Fujii, Takashi; Shinmura, Satoru; Fujino, Masaru; Mizuno, Shinobu; Sekijima, Takenori; Chikagawa, Osamu; and Takagi, Hiroshi, 5,701,108, Cl. 333-202.000.
Mizuno, Yoshikazu: *See—*
Hiramatsu, Nobutaka; Sugita, Mitsuru; Mizuno, Yoshikazu; and Shibayama, Takayuki, 5,700,093, Cl. 384-276.000.
Mizuta, Muneo, to Jatco Corporation. Cooling structure of automatic transmission. 5,700,221, Cl. 475-146.000.
Mizutani, Yoshihiro: *See—*
Katsuro, Noboru; Suemoto, Toshiro; Mizutani, Yoshihiro; and Shini, Masami, 5,700,552, Cl. 428-214.000.
Mjalli, Adnan; and Sarshar, Sepehr, to Ontogen Corporation. 1,2,4,5-tetra substituted imidazoles as modulators of multi-drug resistance. 5,700,826, Cl. 514-397.000.
MMG Automatika Muvek Reszvenytarsasag: *See—*
Alesz, József; Busznyák, Imre; Glódi, István; Kiss, András; Kukta, Józsefné; Nagy, Béla; Salamon, Péter; Szentpétery, Elemér; Tóth, Zoltán; and Ujhelyi, Tamás, 5,700,957, Cl. 73-861.357.
Mochizuki, Keizo: *See—*
Makishima, Shinichi; and Mochizuki, Keizo, 5,700,508, Cl. 426-441.000.
Mochizuki, Takeshi; and Saito, Susumu, to Hitachi Koki Co., Ltd. Laser scanner and scanning lens. 5,701,190, Cl. 359-205.000.
Mock, Mel Corrie, to Cooper Industries. Multiple purpose compound action snips. 5,699,617, Cl. 30-252.000.
Moen Incorporated: *See—*
Burchard, Thomas H.; Hunter, Gregory; Johnson, Kevin M.; Karg, Jeffery; and Bertrand, John E., 5,699,832, Cl. 137-614.200.
Moerl, Lothar: *See—*
Klatt, Bruno; Horx, Manfred; Koelling, Hartmut; Berndt, Karlheinz; Krueger, Gerhard; Kuenne, Hans-Joachim; Moerl, Lothar; and Backhauss, Lothar, 5,700,572, Cl. 428-357.000.
Mohan Rao, G. R., to Cirrus Logic, Inc. Single chip controller-memory device with interbank cell replacement capability and a memory architecture and methods suitble for implementing the same. 5,701,270, Cl. 365-230.030.
Mohr, Martin: *See—*
Wolf, Franz Josef; Mohr, Martin; and Nix, Stefan, 5,700,000, Cl. 267-140.130.
Mohr, Peter: *See—*
Klaus, Michael; and Mohr, Peter, 5,700,836, Cl. 514-544.000.
Mold-Masters Limited: *See—*
Bauer, Klaus, 5,700,499, Cl. 425-564.000.
Molex Incorporated: *See—*
Grois, Igor; Makhlin, Ilya; Bunin, Grigoriy; and Pescetto, Michael J., 5,701,382, Cl. 385-140.000.
Moli Energy (1990) Limited: *See—*
Zhong, Qiming; Sacken, Ulrich Von; Gao, Yuan; and Dahn, Jeffery Raymond, 5,700,597, Cl. 429-218.000.
Molitor, Bruce Edward: *See—*
Masor, Marc Leif; Leach, James Lee; Molitor, Bruce Edward; Benson, John Durand; and Baxter, Jeffrey H., 5,700,590, Cl. 426-656.000.
Moll, Hurley Chester, Jr.: *See—*
Weidler, Charles Harry; Long, Michael David; and Moll, Hurley Chester, Jr., 5,700,164, Cl. 439-607.000.
Mondek, Martin J.; and Kantola, James C., to Outboard Marine Corporation. Electronic ignition interruption apparatus. 5,700,168, Cl. 440-1.000.
Monforte, Joseph Albert; Becker, Christopher Hank; Shaler, Thomas Andrew; and Pollart, Daniel Joseph, to SRI International. Oligonucleotide sizing using immobilized cleavable primers. 5,700,642, Cl. 435-6.000.
Mongelli, Nicola; Crugnola, Angelo; Lombardi Borgia, Andrea; and Pesenti, Enrico, to Pharmacia & Upjohn S.p.A. Ureido derivatives of naphthalenephosphonic acids. 5,700,788, Cl. 514-91.000.
Moniwa, Akemi: *See—*
Hasegawa, Norio; Terasawa, Tsuneo; Fukuda, Hiroshi; Hayano, Katsuya; Imai, Akira; Moniwa, Akemi; and Okazaki, Shinji, 5,700,601, Cl. 430-5.000.
Monsanto Company: *See—*
Massman, Brent D.; and Miller, Maria L., 5,700,475, Cl. 424-408.000.
Phillion, Dennis Paul; Ruminski, Peter Gerrard; and Yalamanchili, Gopichand, 5,700,840, Cl. 514-628.000.
Montgomery, Frederick J.: *See—*
Bathe, Duncan P. L.; Montgomery, Frederick J.; and Roehl, Robin L., 5,699,790, Cl. 128-204.220.
Moon, Gun Woo: *See—*
Youn, Myung Joong; Moon, Gun Woo; and Kim, Marn Go, 5,701,243, Cl. 363-89.000.
Moon, Sung Hun: *See—*
Park, Tae Ho; Kim, Chun Suk; and Moon, Sung Hun, 5,700,744, Cl. 501-15.000.
Moon, Yong-Ho; Kim, Jae-Ho; and Park, Dong-Seek, to SamSung Electronics Co., Ltd. Fractal image compression device and method. 5,701,369, Cl. 382-249.000.

Moore, Edward E.: *See—*
Irwin, Bruce C.; Moore, Edward E.; and Baum, Raymond F., 5,700,143, Cl. 431-284.000.
Moore, Gregory James: *See—*
Keener, Don Steven; and Moore, Gregory James, 5,701,514, Cl. 395-834.000.
Moormann, Laurel A.: *See—*
Goldberg, Ira B.; Mays, David L.; and Moormann, Laurel A., 5,701,083, Cl. 324-642.000.
Moreau, Christophe: *See—*
Tabbane, Sami; and Moreau, Christophe, 5,701,586, Cl. 455-33.400.
Moremen, Kelley Wilson: *See—*
Prieto, Pedro Antonio; Smith, David Fletcher; Cummings, Richard Dale; Kopchick, John Joseph; Mukerji, Pradip; Moremen, Kelley Wilson; and Pierce, James Michael, 5,700,671, Cl. 435-172.300.
Moret, Gilbert: *See—*
Wettstein, Arthur; and Moret, Gilbert, 5,699,724, Cl. 99-489.000.
Morgan, Charles R.: *See—*
Speer, Drew V.; Roberts, William P.; Morgan, Charles R.; and Ebner, Cynthia L., 5,700,554, Cl. 428-220.000.
Morgan, Paul F., to Xerox Corporation. Web feed printer drive system. 5,701,565, Cl. 399-299.000.
Mori, Junji: *See—*
Honda, Tsutomu; Itoh, Hisanori; Ueno, Takuya; Mori, Junji; Matsumoto, Hiroyuki; Hasegawa, Yasushi; and Kajita, Hideo, 5,701,518, Cl. 396-29.000.
Mori, Mutsuhiro: *See—*
Hanaoka, Koumei; Sakurai, Naoki; and Mori, Mutsuhiro, 5,701,018, Cl. 257-140.000.
Mori, Nobuyoshi: *See—*
Waketa, Yuko; and Mori, Nobuyoshi, 5,701,207, Cl. 359-717.000.
Moriarty, Michael P.; and Larson, John E., to Compaq Computer Corporation. Computer system having a memory controller which performs readahead operations which can be aborted prior to completion. 5,701,433, Cl. 395-481.000.
Morijiri, Makoto: *See—*
Taniyama, Akira; Morijiri, Makoto; Tanaka, Haruko; Yuito, Isamu; Ashida, Eiji; Koyanagi, Hiroaki; Tanabe, Hideo; and Kobayashi, Tetsuo, 5,701,221, Cl. 360-113.000.
Morikawa, Yoshihiro: *See—*
Shinojima, Satoshi; Suetsugu, Masaru; Morikawa, Yoshihiro; Shibata, Yuki; and Kaku, Rumiko, 5,700,784, Cl. 514-24.000.
Morimoto, Kiyoshi; Watanabe, Yasushi; Sanada, Yoshika; Miwa, Teiichi; and Masada, Tomoaki, to Kyowa Hakko Kogyo Co., Ltd. Rotary-type tabletting machine with lubricant spraying means. 5,700,492, Cl. 425-100.000.
Morimoto, Satoru: *See—*
Kashiwagi, Yoshinari; Umetani, Makoto; Kataoka, Hidenao; Inoue, Kenji; Nakamura, Shoji; and Morimoto, Satoru, 5,700,307, Cl. 65-374.100.
Morin, Aurele. Electrical outlet type extension cord reel with auxiliary outlet. 5,700,150, Cl. 439-4.000.
Morin, Jean-Xavier: *See—*
Suraniti, Silvestre; and Morin, Jean-Xavier, 5,700,431, Cl. 422-139.000.
Morita, Kazuo; and Ide, Motoki, to NEC Corporation. Pictorial display apparatus for receivers for implementing the pictorial display. 5,701,588, Cl. 455-38.400.
Morita, Kiyoo: *See—*
Nakane, Takanobu; and Morita, Kiyoo, 5,699,973, Cl. 242-345.000.
Morita, Shinsaku; and Sato, Yoshiyuki, to Japan Vac's Metal Co., Ltd. Vacuum sealing structure. 5,700,014, Cl. 277-167.500.
Morita, Takasi: *See—*
Iwanaga, Shin-ichiro; Shingae, Shigeru; Morita, Takasi; Ishikawa, Osamu; and Nojima, Norichika, 5,700,852, Cl. 523-201.000.
Moriwaki, Nobuyuki: *See—*
Ikeda, Shuji; Meguro, Satoshi; Hashiba, Soichiro; Kuramoto, Isamu; Koike, Atsuyoshi; Sasaki, Katsuro; Ishibashi, Koichiro; Yamanaka, Toshiaki; Hashimoto, Naotaka; Moriwaki, Nobuyuki; Takahashi, Shigeru; Hiraishi, Atsushi; Kobayashi, Yutaka; and Yukutake, Seigou, 5,700,704, Cl. 437-52.000.
Moriya, Yukio; Koyanagi, Satoru; Fujimura, Tetsuya; Nagahama, Masayuki; Yamazaki, Kazuyuki; and Hishiyama, Toru, to Kabushiki Kaisha Komatsu Seisakusho. Operation control system for traveling vehicle. 5,699,873, Cl. 180-402.000.
Morris, Gregory Lynn: *See—*
Baugher, Mark John; Chang, Philip Yen-Tang; Morris, Gregory Lynn; and Stephens, Alan Palmer, 5,701,465, Cl. 395-610.000.
Morris, John F.: *See—*
Bourgeois, Kenneth W.; Morris, Thomas R.; Morris, Joseph R.; and Morris, John F., 5,699,640, Cl. 52-309.400.
Morris, Joseph R.: *See—*
Bourgeois, Kenneth W.; Morris, Thomas R.; Morris, Joseph R.; and Morris, John F., 5,699,640, Cl. 52-309.400.
Morris, Thomas R.: *See—*
Bourgeois, Kenneth W.; Morris, Thomas R.; Morris, Joseph R.; and Morris, John F., 5,699,640, Cl. 52-309.400.
Morrison, Gary Wayne; Mann, Stephen; and Bennett, Christopher, to Imperial Chemical Industries PLC. Thermal transfer printing receiver sheet. 5,700,755, Cl. 503-227.000.
Morrow, James G.: *See—*
Saindon, Stephen A.; Heindel, Kevin O.; and Morrow, James G., 5,701,180, Cl. 356-429.000.
Morrow, Jason D.: *See—*
Roberts, L. Jackson; and Morrow, Jason D., 5,700,654, Cl. 435-25.000.
Mortellaro, John, Jr.: *See—*
Kuznets, Sam A.; and Mortellaro, John, Jr., 5,700,214, Cl. 474-110.000.
Mortimer, Ivan, to Lucas Industries plc. Brake booster. 5,699,713, Cl. 91-369.200.
Morton, Donald L.; Gupta, Rishab K.; and Euhus, David M. Method of detection of urinary tumor associated antigen. 5,700,649, Cl. 435-7.100.
Morton International, Inc.: *See—*
Enders, Mark L., 5,700,029, Cl. 280-728.200.
Rath, James; Tran, William Luong-Gia; Flynn, Kathy M.; Tara, Vinai Ming; Koes, Thomas A.; and Nizzo, Vincent J., 5,700,607, Cl. 430-15.000.
Taylor, Robert D., 5,700,974, Cl. 149-109.600.
Morun, Bernd: *See—*
Kienow, Ekkehard; Morun, Bernd; Schwertmann, Thomas; and Hoberg, Heinz, 5,700,441, Cl. 423-244.070.
Moschel, Charles, to Stowe Woodward Company. Roll having means for determining pressure distribution. 5,699,729, Cl. 100-99.000.
Moscot, Betty Lou. Baby support. 5,700,059, Cl. 297-452.170.
Mosel Viltelic, Inc.: *See—*
Hsia, Liang-Choo; and Chang, Thomas, 5,701,013, Cl. 250-491.100.
Moser, Brian A.: *See—*
Baker, Jeffrey Clayton; Moser, Brian A.; and Shrader, Warren E., 5,700,904, Cl. 530-305.000.
Moslehi, Mehrdad M., to Texas Instruments Incorporated. Dry microlithography process. 5,700,628, Cl. 430-313.000.
Mosley, Demmie L., to Titan Specialties, Inc. Underground jet perforating using resistive blasting caps. 5,700,969, Cl. 102-313.000.
Moss, Richard L.: *See—*
Gulbrandsen, Carl E.; and Moss, Richard L., 5,700,790, Cl. 514-167.000.
Mostoller, Charles: *See—*
Bender, Fredric G.; Mostoller, Charles; and Frankovich, Evelyn Marie, 5,700,507, Cl. 426-332.000.
Motogi, Jun; Sakai, Yoshio; and Takeda, Sunao, to Nihon Kohden Corporation. Blood pressure measuring system. 5,699,807, Cl. 128-677.000.
Motohashi, Toshiaki: *See—*
Bisaiji, Takashi; Yu, Hideo; Kawaishi, Yasunori; Motohashi, Toshiaki; Takahashi, Mitsuru; and Kamiyama, Hideki, 5,701,566, Cl. 399-302.000.
Motorola: *See—*
Huang, Jean-Hwa; Thero, Christine; and Shiralagi, Kumar, 5,700,703, Cl. 437-40.000.
Motorola, Inc.,: *See—*
Geiger, Robert L., 5,701,302, Cl. 370-521.000.
Motorola, Inc.: *See—*
Brannan, Michael H.; Garcia, Jorge Luis; Nichols, Jerry Ray; and Tokiyama, Masaru, 5,701,355, Cl. 381-169.000.
Cheng, Yiu-Wah Eric; Du, Wei-Jen Jim; and Huang, Shou-Yuan Richard, 5,701,414, Cl. 395-200.090.
Csapo, John Steven; Aldrich, James Peter; and Gay, Ben Douglas, 5,701,297, Cl. 370-341.000.
DeLuca, Michael J.; and Mittel, James G., 5,701,312, Cl. 371-32.000.
Emmert, Steven C.; Lundell, Louis J.; and Murray, Michael P., 5,701,244, Cl. 363-146.000.
Harris, Daryl Robert; Jambhekar, Shrirang Nilkanth; Reber, William Louis; Stuckman, Bruce Edward; and Perttunen, Cary Drake, 5,701,258, Cl. 364-514.00R.
Kapoor, Vijay, 5,701,311, Cl. 371-32.000.
Koda, Rikki; and Dolezal, Anthony James, 5,701,189, Cl. 359-172.000.
Lee, Steven G.; Iehl, Brian D.; Manya, Omerom; Schellinger, Michael J.; and D'Avello, Robert F., 5,701,589, Cl. 455-56.100.
Miller, Gary Lynn; Goler, Vernon Bernard; and Litch, Timothy Ernest, 5,701,421, Cl. 395-309.000.
Mulchandani, Deepak; and Gray, Rand, 5,701,488, Cl. 395-704.000.
Pan, Shao Wei; and Wang, Shay-Ping Thomas, 5,701,391, Cl. 395-2.210.
Shin, Hank Hukyoo; Tracy, Clarence J.; Duffin, Robert L.; Freeman, John L., Jr.; Grivna, Gordon; and Wilson, Syd R., 5,700,721, Cl. 437-198.000.
Stuckman, Bruce Edward; and Hayner, David Alan, 5,701,395, Cl. 395-20.000.
Thill, Kevin Michael; and Walthers, Dwight David, 5,701,130, Cl. 343-895.000.
Wetters, John; Simmons, John Wayne; Fernandez, Virgilio Alejandro; Ahrens, Art; and Carsello, Steve, 5,701,600, Cl. 455-208.000.
Motoyama, Tetsuro, to Ricoh Company, Ltd.; and Ricoh Corporation. Multifunction machine for combining and routing image data. 5,701,184, Cl. 358-450.000.
Motoyoshi, Makoto: *See—*
Meguro, Satoshi; Uchibori, Kiyofumi; Suzuki, Norio; Motoyoshi, Makoto; Koike, Atsuyoshi; Yamanaka, Toshiaki; Sakai, Yoshio; Kaga, Toru; Hashimoto, Naotaka; Hashimoto, Takashi; Honjou, Shigeru; and Minato, Osamu, 5,700,705, Cl. 437-52.000.
Mott, Philip J.: *See—*
Simpson, Roger T.; and Mott, Philip J., 5,700,216, Cl. 474-110.000.
Motzkat, Kerstin: *See—*
Huver, Thomas; Friese, Carsten; Emmerling, Winfried; Kux, Michael; and Motzkat, Kerstin, 5,700,891, Cl. 526-301.000.
Moulden, Daniel P.: *See—*

Bestgen, Michael J.; Kramer, Richard B.; Moulden, Daniel P.; Barbee, Chris; and Hibbetts, Bryon, 5,699,894, Cl. 198-678.100.
Mousseau, Joseph P.: *See—*
Tuttle, Mark E.; Mousseau, Joseph P.; and Cirillo, Clay L., 5,700,981, Cl. 174-250.000.
Moynihan, Edward R.; Gailus, David W.; Palifka, Robert G.; Hoisington, Paul A.; Hine, Nathan P.; Adams-Brady, David; Biggs, Melvin L.; McDonald, Marlene M.; Barss, Steven H.; Mackay, Diane; Paulson, Bruce A.; and Mackay, Stephen C., to Spectra, Inc. Deaerator for simplified ink jet head. 5,701,148, Cl. 347-92.000.
Mr. Safety Check Systems Inc: *See—*
Hockley, Des, 5,699,880, Cl. 188-1.110.
Mraz, Ronald: *See—*
Abali, Bulent; and Mraz, Ronald, 5,701,446, Cl. 395-551.000.
MTU Motoren-Und Turbinen-Union München GmbH: *See—*
Puchinger, Franz; Rossman, Axel; Sikorski, Siegfried; and Wydra, Gerhard, 5,700,743, Cl. 442-243.000.
Mudahar, Gurmail, to DNA Plant Technology Corporation. Method for prolonging the shelf life of fresh tomato pieces. 5,700,506, Cl. 426-316.000.
Mudge, Philip Howland: *See—*
Platner, Brian Page; and Mudge, Philip Howland, 5,701,117, Cl. 340-567.000.
Muelle, Wilhelm: *See—*
Materne, Kurt André; Philipp, Guenther; and Muelle, Wilhelm, 5,699,895, Cl. 198-731.000.
Mueller, Gerd O.; and Mueller-Mach, Regina B., to Hewlett-Pacard Company. Electroluminescent materials for edge emitters. 5,700,592, Cl. 428-690.000.
Mueller, Johann; and Kern, Ingrid, to Wacker-Chemie GmbH. Coated airbags, coating material and coating process. 5,700,870, Cl. 524-837.000.
Mueller, Werner: *See—*
Nieling, Andreas; Frank, Wolfgang; Kissel, Holger; Koehler, Reinhard; and Mueller, Werner, 5,700,191, Cl. 454-69.000.
Mueller-Mach, Regina B.: *See—*
Mueller, Gerd O.; and Mueller-Mach, Regina B., 5,700,592, Cl. 428-690.000.
Mühlegger, Klaus: *See—*
Seliger, Heinz-Hartmut; Berner, Sibylle; Mühlegger, Klaus; Von der Eltz, Herbert; and Batz, Hans-Georg, 5,700,919, Cl. 536-22.100.
Muhs, Jeffrey D.; and Allison, Stephen W., to Lockheed Martin Energy Systems, Inc. Optical fiber sensors for monitoring joint articulation and chest expansion of a human body. 5,701,370, Cl. 385-13.000.
Mukerji, Pradip: *See—*
Prieto, Pedro Antonio; Smith, David Fletcher; Cummings, Richard Dale; Kopchick, John Joseph; Mukerji, Pradip; Moremen, Kelley Wilson; and Pierce, James Michael, 5,700,671, Cl. 435-172.300.
Mukohyama, Atsushi, to Du Pont de Nemours, E. I., and Company. Flame resistant polyester resin composition. 5,700,857, Cl. 524-290.000.
Mulcahy, Joseph A.: *See—*
Beitelman, Leonid; and Mulcahy, Joseph A., 5,699,850, Cl. 164-468.000.
Mulchandani, Deepak; and Gray, Rand, to Motorola, Inc. Method and apparatus for restoring a target MCU debug session to a prior state. 5,701,488, Cl. 395-704.000.
Mulchandani, Rohini Prakash; and Mahmoud, Mohamed Ibrahim, to Abbott Laboratories. Liquid nutritional product containing improved stabilizer composition. 5,700,513, Cl. 426-590.000.
Mulder, Hugo, to Cordis Corporation. Balloon catheter and method for facilitating increased radial expansion. 5,700,242, Cl. 604-96.000.
Muller, Joachim; and Klingler, Horst, to MAN Roland Druckmaschinen AG. Method and apparatus for controlling the sheet supply in a sheet-processing printing machine. 5,699,736, Cl. 101-232.000.
Muller, Laurent E.: *See—*
Boyle, Bruce W.; and Muller, Laurent E., 5,699,996, Cl. 254-134.400.
Müller, Michael; Benz, Volker; Numrich, Uwe; Pühler, Horst; and Wopker, Wilhelm, to Roehm GmbH Chemische Fabrik. Heat resistant composite laminate. 5,700,566, Cl. 428-332.000.
Müller, Siegfried: *See—*
Bühler, Jürg; and Müller, Siegfried, 5,700,429, Cl. 422-104.000.
Müller, Wolfgang: *See—*
Kellner, Walter-Ulrich; Küsters, Karl-Heinz; Müller, Wolfgang; and Stelz, Franz-Xaver, 5,701,022, Cl. 257-300.000.
Mullet, Daniel I.: *See—*
Gerber, Nicholas; Apseloff, Glen; and Mullet, Daniel I., 5,700,487, Cl. 424-650.000.
Munschy, Dorothy G. Adjustable footwear. 5,699,629, Cl. 36-97.000.
Muraguchi, Tomokazu; and Matsumoto, Takuya, to Mitsubishi Jidosha Kogyo Kabushiki Kaisha. Fuel evaporative emission suppressing apparatus. 5,699,778, Cl. 123-698.000.
Murakami, Gen: *See—*
Oguchi, Satoshi; Ishihara, Masamichi; Ito, Kazuya; Murakami, Gen; Anjoh, Ichiro; Sakuta, Toshiyuki; Yamaguchi, Yasunori; Kasama, Yasuhiro; Udagawa, Tetsu; Miyamoto, Eiji; Matsuno, Youichi; Satoh, Hiroshi; and Nozoe, Atsusi, 5,701,031, Cl. 257-686.000.
Murakami, Masashi: *See—*
Matsumoto, Shuichi; Kuroyanagi, Masatoshi; Toyao, Tetsuya; Murakami, Masashi; and Arakoma, Yukihisa, 5,699,770, Cl. 123-470.000.
Murakami, Mototake; Aoe, Seiichiro; and Tatsumi, Kiyoshi, to Snow Brand Milk Products Co., Ltd. Method of fractionating an edible oil containing 2-palmitoyl-1,3-dioleylglycerol. 5,700,509, Cl. 426-495.000.
Murakami, Tokumichi: *See—*
Ohira, Hideo; Murakami, Tokumichi; Asai, Kohtaro; and Shimada, Toshiaki, 5,701,158, Cl. 348-410.000.
Ohira, Hideo; Murakami, Tokumichi; Asai, Kohtaro; and Shimada, Toshiaki, 5,701,159, Cl. 348-410.000.
Muramatsu, Masami: *See—*
Taniguchi, Tadatsugu; Muramatsu, Masami; Sugano, Haruo; Matsui, Hiroshi; Kashima, Nobukazu; and Hamuro, Junji, 5,700,913, Cl. 530-351.000.
Murata, Fumio: *See—*
Arita, Setsuo; Ito, Tetsuo; Ohga, Yukiharu; Ujita, Hiroshi; Murata, Fumio; Miyake, Masao; and Nishizawa, Yasuo, 5,701,394, Cl. 395-11.000.
Murata Kikai Kabushiki Kaisha: *See—*
Maruki, Hiroshige, 5,699,661, Cl. 57-328.000.
Murata Manufacturing Co., Ltd.: *See—*
Fujii, Takashi; Shinmura, Satoru; Fujino, Masaru; Mizuno, Shinobu; Sekijima, Takenori; Chikagawa, Osamu; and Takagi, Hiroshi, 5,701,108, Cl. 333-202.000.
Kaida, Hiroaki, 5,701,048, Cl. 310-321.000.
Kubodera, Noriyuki; and Kouno, Yoshiaki, 5,700,338, Cl. 156-89.000.
Okada, Takekazu; Maruyama, Yuichi; and Sayanagi, Kazuya, 5,701,128, Cl. 343-700.0MS.
Murata, Nobuo: *See—*
Eto, Yoshizumi; Murata, Nobuo; Tanabe, Kazuhiro; and Nisikawa, Hiroyuki, 5,701,581, Cl. 455-5.100.
Murata, Yukio: *See—*
Komoda, Motoyoshi; and Murata, Yukio, 5,701,354, Cl. 381-157.000.
Murch, Bruce Prentiss: *See—*
Hardy, Frederick Edward; and Murch, Bruce Prentiss, 5,700,771, Cl. 510-315.000.
Murdoch, Graham Alexander M., to Uniscan Ltd.; and Magellan Technology Pty. Ltd. Transducer and interrogator device. 5,701,121, Cl. 340-825.540.
Murdock Webbing Company, Inc.: *See—*
Golz, Robert E., 5,699,836, Cl. 139-22.000.
Muroi, Kohichi: *See—*
Kasahara, Michiaki; Kawano, Hazime; Inami, Kazuyoshi; Muroi, Kohichi; and Iyama, Yoshitada, 5,701,107, Cl. 333-164.000.
Muroi, Yoshiyuki: *See—*
Katayama, Yasushi; Maeda, Kouji; Nakai, Ryozo; Muroi, Yoshiyuki; and Okajima, Takao, 5,700,449, Cl. 424-49.000.
Muroyama, Masakazu, to Sony Corporation. Method for making semiconductor device. 5,700,736, Cl. 438-622.000.
Murphy, Kent T.: *See—*
Lewis, David E.; and Murphy, Kent T., 5,700,979, Cl. 174-117.00F.
Murphy, Thomas, to Environment, Canada, Her Majesty the Queen in right of, as represented by the Minister of the. System to reduce sediment toxicity. 5,700,685, Cl. 435-262.500.
Murray, Michael P.: *See—*
Emmert, Steven C.; Lundell, Louis J.; and Murray, Michael P., 5,701,244, Cl. 363-146.000.
Murray, Rex Eugene, to Union Carbide Chemicals & Plastics Technology Corporation. Catalyst for the production of olefin polymers comprising a bridging allyl-cyclodienyl ligand on a metal atom. 5,700,748, Cl. 502-102.000.
Must Systems Inc.: *See—*
Chen, Hsi-Min, 5,700,005, Cl. 271-188.000.
Mustich, Giuseppe: *See—*
Bombardelli, Ezio; Mustich, Giuseppe; and Bertani, Marco, 5,700,468, Cl. 424-195.100.
Musto, Dominick: *See—*
Miller, Scott; Brady, Don; Williamson, Steven; Luftig, Steven; and Musto, Dominick, 5,700,141, Cl. 431-125.000.
Miller, Scott; Brady, Don; Williamson, Steven; Luftig, Steven; and Musto, Dominick, 5,700,142, Cl. 431-125.000.
Mutsuga, Yasuaki: *See—*
Nishikawa, Michinori; Miyamoto, Tsuyoshi; Kawamura, Shigeo; Yasuda, Kyouyu; Mutsuga, Yasuaki; and Matsuki, Yasuo, 5,700,860, Cl. 524-317.000.
Mycogen Corporation: *See—*
Caulder, Jerry; Crowley, R. Hugh; Zorner, Paul S.; and Evans, Steven L., 5,700,759, Cl. 504-133.000.
Myers, Alan R., to Fairchild Holding Corp. Wrenching tool with free-floating, self-relieving anti-rotation key. 5,699,702, Cl. 81-56.000.
Myers, David J.; Lewis, James D.; House, Wayne D.; and Schwarz, Karl E., to W. L. Gore & Associates, Inc. Intraluminal stent graft. 5,700,285, Cl. 623-1.000.
Myers, David J.; Lewis, James D.; and Campbell, Carey V., to W. L. Gore & Associates, Inc. Prosthetic vascular graft with deflectably secured fibers. 5,700,287, Cl. 623-1.000.
N.V. Michel Van De Wiele: *See—*
Desmet, Hans, 5,699,837, Cl. 139-102.000.
Nabeya, Hajime: *See—*
Sugifune, Shin; Kanno, Tsutomu; and Nabeya, Hajime, 5,701,001, Cl. 235-472.000.
Nagabushnam, Varatharajan: *See—*
Sharan, Sujit; and Nagabushnam, Varatharajan, 5,700,716, Cl. 437-190.000.

Nagahama, Masayuki: *See—*
Moriya, Yukio; Koyanagi, Satoru; Fujimura, Tetsuya; Nagahama, Masayuki; Yamazaki, Kazuyuki; and Hishiyama, Toru, 5,699,873, Cl. 180-402.000.
Nagai, Toshitake; Ikumi, Yonezo; Kakinuma, Takahide; Sawada, Norio; Sato, Koji; and Watanabe, Masato, to Sanyo Electric Co., Ltd. Heat exchanger and cooling apparatus mounted with the same. 5,699,675, Cl. 62-149.000.
Nagai, Yutaka, to Mitsubishi Denki Kabushiki Kaisha. Semiconductor laser for pumping light amplifier. 5,701,322, Cl. 372-46.000.
Nagano, Masashi, to Shimano, Inc. Connecting structure between bicycle pedal and cleat, bicycle pedal and cleat. 5,699,699, Cl. 74-594.600.
Nagano, Shuichi: *See—*
Katsuyama, Akira; Tomizawa, Kenji; Nagano, Shuichi; and Koya, Takashi, 5,701,385, Cl. 386-106.000.
Nagano, Toru: *See—*
Yagi, Sakai; Watanabe, Tamio; and Nagano, Toru, 5,701,079, Cl. 324-538.000.
Nagano, Tsuyoshi, to NEC Corporation. Optical head with hologram couplers for reading and writing data. 5,701,289, Cl. 369-112.000.
Nagao, Takashi: *See—*
Venable, Dennis L.; and Nagao, Takashi, 5,701,479, Cl. 395-670.000.
Nagasaka, Hiroshi: *See—*
Fujii, Kanenaga; Kiuchi, Masato; Nagasaka, Hiroshi; Kimura, Yoshikazu; and Tsuchiya, Naoki, 5,700,546, Cl. 428-156.000.
Nagasaki, Tomohisa: *See—*
Ohneda, Akira; Sasaki, Kazuyuki; Natori, Yohei; and Nagasaki, Tomohisa, 5,700,776, Cl. 514-12.000.
Nagashima, Tetsuro; Kawanishi, Toshiharu; Okutani, Shigeaki; Nomura, Osamu; and Iino, Takashi, to Fujitsu Limited. Information processing apparatus including synchronous storage having backup registers for storing the latest sets of information to enable state restoration after interruption. 5,701,436, Cl. 395-489.000.
Nagatani, Noboru: *See—*
Okada, Jouji; Kawamata, Akira; Tokunaga, Tadayuki; Nagatani, Noboru; Torizuka, Makoto; and Asahi, Masahiko, 5,700,898, Cl. 528-25.000.
Nagayama, Kenichi; and Miyaguchi, Satoshi, to Pioneer Electronic Corporation. Organic electoluminescent display panel and method for manufacturing the same. 5,701,055, Cl. 313-504.000.
Nagazumi, Yasuó, to G.D.S. Co., Ltd. Multiplier using charge transfer device. 5,701,260, Cl. 364-606.000.
Nagoshi, Shigeyasu: *See—*
Akiyama, Yuji; Hirabayashi, Hiromitsu; Nagoshi, Shigeyasu; Arai, Atsushi; Kurata, Tetsuji; Sugimoto, Hitoshi; and Matsubara, Miyuki, 5,701,146, Cl. 347-26.000.
Nagy, Béla: *See—*
Alesz, József; Busznyák, Imre; Glódi, István; Kiss, András; Kukta, Józsefné; Nagy, Béla; Salamon, Péter; Szentpétery, Elemér; Tóth, Zoltán; and Ujhelyi, Tamás, 5,700,957, Cl. 73-861.357.
Nakagawa, Takayuki, to Hitachi, Ltd. Interleave memory controller with a common access queue. 5,701,434, Cl. 395-484.000.
Nakagawa, Tatsuya; and Ezaki, Yasuo, to Excell Corporation. Multi-layer plastic hollow pipe. 5,699,835, Cl. 138-141.000.
Nakagawa, Toshiko, to MEC Co., Ltd. Etching solution for copper or copper alloy. 5,700,389, Cl. 252-79.200.
Nakagawa, Tsuguhiko; Yamaguchi, Ryosuke; Osanai, Hisashi; Hasunuma, Junichi; and Yamamoto, Takemi, to Kawasaki Steel Corporation. Non-oxidizing heating method and apparatus. 5,700,420, Cl. 266-44.000.
Nakahara, Shigeru, to Hitachi, Ltd. Data processor with functional register and data processing method. 5,701,425, Cl. 395-376.000.
Nakai, Michio: *See—*
Saito, Izumu; Kanegae, Yumi; and Nakai, Michio, 5,700,470, Cl. 424-233.100.
Nakai, Ryozo: *See—*
Katayama, Yasushi; Maeda, Kouji; Nakai, Ryozo; Muroi, Yoshiyuki; and Okajima, Takao, 5,700,449, Cl. 424-49.000.
Nakai, Tetsuo: *See—*
Kukino, Satoru; Nakai, Tetsuo; Goto, Mitsuhiro; Yoshioka, Takashi; and Setoyama, Makoto, 5,700,551, Cl. 428-212.000.
Nakajima, Namiko: *See—*
Takenishi, Soichiro; Suzuki, Osamu; Yokomizo, Hirohiko; Ichihara, Tatsuo; Masuda, Gen; Nakajima, Namiko; and Komiya, Kazuko, 5,700,935, Cl. 544-139.000.
Nakamichi, Kouichi; Izumi, Shougo; and Yasuura, Hiroyuki, to Nippon Shinyaku Co., Ltd. Method of manufacturing wax matrices. 5,700,410, Cl. 264-122.000.
Nakamura, Akira: *See—*
Notsu, Ikurou; Matsuda, Hiroshi; Hamazaki, Nobuo; Takada, Yutaka; Miyata, Tatsuji; and Nakamura, Akira, 5,699,767, Cl. 123-323.000.
Nakamura, Ichiro: *See—*
Nogami, Tadahiko; Nakamura, Ichiro; Hiraku, Kenji; Sadamori, Hiroyuki; Yasuda, Kenichi; Narita, Kenjiro; Horii, Kenji; and Shimogama, Hironori, 5,699,693, Cl. 72-199.000.
Nakamura, Kenichi: *See—*
Hashimoto, Toshihiro; Nakamura, Kenichi; and Takagawa, Makoto, 5,700,944, Cl. 546-327.000.
Nakamura, Koji: *See—*
Harada, Junji; Harada, Ichiro; and Nakamura, Koji, 5,700,127, Cl. 414-416.000.
Nakamura, Masami: *See—*
Hamada, Kenji; Kirihata, Toshinori; Kamikubo, Keita; Takagi, Mikio; Nakamura, Masami; Narahara, Youzaburo; and Kawasaki, Koichi, 5,699,656, Cl. 56-11.100.
Nakamura, Shinichi, to Olympus Optical Co., Ltd. Stereomicroscope. 5,701,196, Cl. 359-362.000.
Nakamura, Shinji; and Kuriyama, Chojiro, to Rohm Co., Ltd. Method of manufacturing a tantalum solid state electrolytic capacitor. 5,699,597, Cl. 29-25.030.
Nakamura, Shoji: *See—*
Kashiwagi, Yoshinari; Umetani, Makoto; Kataoka, Hideneo; Inoue, Kenji; Nakamura, Shoji; and Morimoto, Satoru, 5,700,307, Cl. 65-374.100.
Nakamura, Sou: *See—*
Sano, Hisashi; Nakamura, Sou; Sawada, Hideshi; Adachi, Shuichi; and Kasuya, Hideki, 5,701,349, Cl. 381-71.000.
Nakamura, Tokuji, to Sumitomo Wiring Systems, Ltd. Connector holding device. 5,699,608, Cl. 29-747.000.
Nakamura, Toshiyuki: *See—*
Ohishi, Sueyuki; and Nakamura, Toshiyuki, 5,701,521, Cl. 396-52.000.
Nakamura, Yukio: *See—*
Ogihara, Mitsuhiko; Nakamura, Yukio; Koizumi, Masumi; and Taninaka, Masumi, 5,700,714, Cl. 437-167.000.
Nakane, Takanobu; and Morita, Kiyoo, to Fuji Photo Film Co., LTD. Tape reel having air discharging grooves formed in flange. 5,699,973, Cl. 242-345.000.
Nakanishi, Eiichi; and Onodera, Tetsuo, to Oki Electric Industry Co., Ltd. Portable electronic device and method for supplying current to different loads. 5,701,597, Cl. 455-127.000.
Nakanishi Metal Works Co., Ltd.: *See—*
Hashimoto, Koichi; and Kamiji, Michiyuki, 5,699,946, Cl. 225-1.000.
Nakano, Masaki: *See—*
Miyamoto, Kazuki; Ohki, Naoyuki; Nakano, Masaki; Ushiro, Takahiro; Fukazu, Yasuo; Chaki, Atsushi; Takata, Shinichi; and Ohyoshi, Kazuhiro, 5,701,402, Cl. 395-115.000.
Nakano, Yuki: *See—*
Ikeda, Atsuhiko; Ozaki, Masami; Honami, Reijiro; Yumita, Takashi; Yano, Hiroyuki; Nakano, Yuki; Kurihara, Yutaka; and Hirano, Tadayoshi, 5,700,824, Cl. 514-383.000.
Nakata, Masahide: *See—*
Suzuki, Masao; Saito, Koichi; and Nakata, Masahide, 5,700,396, Cl. 252-309.000.
Nakaya, Takanori, to Hamamatsu Photonics K.K. Driving circuit for electron multiplying devices. 5,701,004, Cl. 250-207.000.
Nakayama, Tsuyoshi: *See—*
Sugiyama, Akira; Nakayama, Tsuyoshi; Kato, Masaaki; Maruyama, Yoichiro; and Arisawa, Takashi, 5,701,320, Cl. 372-32.000.
Nakazato, Youichi: *See—*
Kageyama, Shuhei; Kageyama, Toshihiko; Nakazato, Youichi; and Mitsuya, Yoshihide, 5,700,101, Cl. 401-52.000.
Nakazawa, Tomoko: *See—*
Matsuda, Hidemi; Itou, Takeo; and Nakazawa, Tomoko, 5,700,609, Cl. 430-27.000.
Nakazawa, Yusuke: *See—*
Kato, Eiichi; Nakazawa, Yusuke; and Ishii, Kazuo, 5,700,612, Cl. 430-49.000.
Naqui, Ali: *See—*
Croteau, Andrew J.; Pierson, Mark W.; Townsend, David E.; and Naqui, Ali, 5,700,655, Cl. 435-30.000.
Narahara, Youzaburo: *See—*
Hamada, Kenji; Kirihata, Toshinori; Kamikubo, Keita; Takagi, Mikio; Nakamura, Masami; Narahara, Youzaburo; and Kawasaki, Koichi, 5,699,656, Cl. 56-11.100.
Narciso, Hugh L., Jr., to PDT Systems, Inc. Balloon perfusion catheter. 5,700,243, Cl. 604-102.000.
Narcy, Bruno: *See—*
David, Patrick; Benazet, Jean D.; and Narcy, Bruno, 5,700,517, Cl. 427-226.000.
Narendrnath, Kadthala R.: *See—*
Babacz, Robert J.; Narendrnath, Kadthala R.; Frake, Kevin; and Baylog, Melissa A., 5,700,327, Cl. 134-1.100.
Narisawa, Tsutomu: *See—*
Kusaka, Yosuke; Uchiyama, Shigeyuki; Yamano, Shozo; and Narisawa, Tsutomu, 5,701,524, Cl. 396-123.000.
Narita, Kenjiro: *See—*
Nogami, Tadahiko; Nakamura, Ichiro; Hiraku, Kenji; Sadamori, Hiroyuki; Yasuda, Kenichi; Narita, Kenjiro; Horii, Kenji; and Shimogama, Hironori, 5,699,693, Cl. 72-199.000.
Narukawa, Toshiki: *See—*
Shimomura, Haruyuki; and Narukawa, Toshiki, 5,701,546, Cl. 395-849.000.
Narumi, Chihiro: *See—*
Yamauchi, Satoshi; Tamura, Hiroshi; Katooka, Takashi; Tsumura, Naoki; Hikichi, Naoto; Narumi, Chihiro; Ezaki, Takashi; Kudo, Shozo; and Ooguro, Yoshihisa, 5,701,497, Cl. 395-753.000.
Nash, John; and Evans, Douglas, to Kensey Nash Corporation. Hemostatic vessel puncture closure with filament lock. 5,700,277, Cl. 606-213.000.
Nassar, Jocelyne: *See—*
Siddiqui, Shahid A.; Ziecker, Roger A.; Wagner, Karen M.; and Nassar, Jocelyne, 5,699,938, Cl. 222-146.500.
Nassif, Naji: *See—*
Greene, Boyd; and Nassif, Naji, 5,700,038, Cl. 285-54.000.

National Research Council of Canada: *See—*
Rioux, Marc, 5,701,173, Cl. 356-73.000.
National Science Council: *See—*
Li, Kuo-Tseng; and Ker, Yen-Chun, 5,700,440, Cl. 423-231.000.
Liu, Wen-Chau; and Laih, Lih-Wen, 5,701,020, Cl. 257-192.000.
Wu, Chien-Ping; and Tsai, Chang-Da, 5,701,100, Cl. 327-559.000.
National Semiconductor Corporation: *See—*
Bulucea, Constantin; and Blanchard, Richard A., 5,701,023, Cl. 257-341.000.
Kuo, James R., 5,701,102, Cl. 330-253.000.
Yeung, Pak-Ho, 5,701,098, Cl. 327-538.000.
National Starch and Chemical Investment Holding Corporation: *See—*
Chiu, Chung-Wai; Jeffcoat, Roger; Henley, Matthew; and Peek, Leroy, 5,700,917, Cl. 536-18.700.
Natori, Yohei: *See—*
Ohneda, Akira; Sasaki, Kazuyuki; Natori, Yohei; and Nagasaki, Tomohisa, 5,700,776, Cl. 514-12.000.
Natsugari, Hideaki; Ikeda, Hitoshi; Ishimaru, Takenori; and Doi, Takayuki, to Takeda Chemical Industries, Ltd. Condensed heterocyclic compounds, their production and use. 5,700,810, Cl. 514-307.000.
Natsuhara, Toshiya: *See—*
Kanazawa, Masaharu; Natsuhara, Toshiya; Hara, Kazuyoshi; and Tanaka, Yasuo, 5,701,569, Cl. 399-308.000.
Nawa, Ikuichiro, to Mitsumi Electric Co., Ltd. Magnetic tape apparatus for eliminating a slack of magnetic tape when changing a tape winding direction. 5,699,972, Cl. 242-334.000.
Nayda, Lisa: *See—*
Anderson, Mark Stephen; Yesberg, John Desborough; Pope, Michael; Nayda, Lisa; Hayman, Ken; and Beahan, Brendan, 5,701,342, Cl. 180-4.000.
Nazarian, Hagop: *See—*
Taffe, Norman P.; Douglass, Stephen M.; and Nazarian, Hagop, 5,701,092, Cl. 326-41.000.
NCH Corporation: *See—*
Barnes, John Franklin; Gutzke, Karl N.; and Hooks, Robert M., 5,700,765, Cl. 508-378.000.
NCR Corporation: *See—*
Kirkland, James B., Jr.; and McDonald, Edward A., 5,701,422, Cl. 395-309.000.
Siefert, David M., 5,701,452, Cl. 395-601.000.
NEC Corporation: *See—*
Arai, Tomohisa, 5,701,306, Cl. 371-22.100.
Fujinami, Satoshi, 5,701,590, Cl. 455-62.000.
Komoda, Motoyoshi; and Murata, Yukio, 5,701,354, Cl. 381-157.000.
Koriyama, Hiroshi, 5,701,220, Cl. 360-106.000.
Morita, Kazuo; and Ide, Motoki, 5,701,588, Cl. 455-38.400.
Nagano, Tsuyoshi, 5,701,289, Cl. 369-112.000.
Norimatsu, Hidehiko, 5,701,603, Cl. 455-277.100.
Okanoue, Kazuhiro; and Ushirokawa, Akihisa, 5,701,333, Cl. 375-347.000.
Ooishi, Mitsuma, 5,700,734, Cl. 438-592.000.
Sakurai, Michio, 5,700,348, Cl. 156-636.100.
Sano, Hideo, 5,701,281, Cl. 369-32.000.
Sasaki, Masakazu, 5,701,029, Cl. 257-377.000.
Sato, Masahiko, 5,701,286, Cl. 369-109.000.
Satoh, Shuji, 5,701,494, Cl. 395-735.000.
Shimada, Yuzo; Suyama, Takayuki; Tanaka, Yoshimasa; and Hasegawa, Shinichi, 5,699,610, Cl. 29-840.000.
Shimoda, Hiromi, 5,701,602, Cl. 455-260.000.
Shinohara, Takuo, 5,701,056, Cl. 313-584.000.
Takano, Isamu, 5,701,087, Cl. 324-765.000.
Takeuchi, Takeshi, 5,701,379, Cl. 385-131.000.
Umezu, Akira, 5,701,299, Cl. 370-376.000.
Yamauchi, Hideyuki, 5,701,296, Cl. 370-282.000.
Yoshimori, Masanori, 5,701,025, Cl. 257-379.000.
Zenke, Masanobu, 5,700,710, Cl. 437-60.000.
Zenke, Masanobu, 5,700,738, Cl. 438-653.000.
Nedwek, David J.; Wilson, Howard; Nugent, Steve; and Dermer, Greg, to Intel Corporation. Method for initializing an array of configurable components. 5,701,420, Cl. 395-284.000.
Neeb, Rolf: *See—*
Brehm, Manfred; Neeb, Rolf; Scharnke, Wolfgang; and Kerscher, Volker, 5,700,576, Cl. 428-412.000.
Neef, Gunter: *See—*
Steinmeyer, Andreas; Neef, Gunter; Kirsch, Gerald; Schwarz, Katica; Thieroff-Ekerdt, Ruth; Wiesinger, Herbert; and Haberey, Martin, 5,700,791, Cl. 514-167.000.
Neeman, Yuval: *See—*
Whitney, Alan; Neeman, Yuval; Koneru, Sudheer; Shah, Milan; Cook, Peter J.; and Miller, Arnold S., 5,701,462, Cl. 395-610.000.
Negus, Charles Christopher; and Linhares, Stephen J., to PLC Medical Systems, Inc. Thoracoscopic transmyocardial revascularization handpiece assembly. 5,700,259, Cl. 606-14.000.
Nehab, Smadar: *See—*
Ostromoukhov, Victor; and Nehab, Smadar, 5,701,366, Cl. 382-237.000.
Neilson, Eric G.; Danoff, Theodore; Okada, Hirokazu; and Strutz, Frank, to University of Pennsylvania, Trustees of the. Compositions and methods for inhibiting fibrogenesis. 5,700,690, Cl. 435-320.100.
Neiser, Gabe; Simon, Theodore; and Schweiger, Barry. Cord-reel assembly mounted within a wall. 5,700,158, Cl. 439-501.000.
Nelms, Kevin. Golf club head. 5,700,208, Cl. 473-324.000.
Nelson, James Edward: *See—*
Lippmann, Raymond; Schnars, Michael John; Nelson, James Edward; and Chintyan, James Robert, 5,701,330, Cl. 375-257.000.
Nelson, Paul: *See—*
Bellows, William; Nelson, Paul; and Messner, Mark, 5,700,201, Cl. 472-103.000.
NeoPath, Inc.: *See—*
Fleck, Thomas M., 5,699,794, Cl. 128-633.000.
Nestec Ltd.: *See—*
Trimbo, Susan, 5,700,837, Cl. 514-546.000.
Nestec S.A.: *See—*
Chauffard, Francoise; Enslen, Mark Y. A.; and Tachon, Pierre, 5,700,484, Cl. 424-496.000.
Desjardins, Jean-Jacques; and Dupart, Pierre, 5,700,512, Cl. 426-557.000.
Nestor, Inc.: *See—*
Glier, Michael T.; Cole, John; and Laird, Mark, 5,701,398, Cl. 395-27.000.
Neubauer, Gerald: *See—*
Fuchs, Hugo; Ritz, Josef; and Neubauer, Gerald, 5,700,358, Cl. 203-31.000.
Neubauer, Ronald Jay: *See—*
Koerber, Paul Donald; and Neubauer, Ronald Jay, 5,701,472, Cl. 395-619.000.
Neudeck, Alexander J., to Hewlett-Packard Co. Frequency independent scan chain. 5,701,335, Cl. 377-69.000.
Neuman, Eli, to Tedea-Huntleigh International, Ltd. Symmetrical load cells for use in conjunction with rotary machines. 5,700,982, Cl. 177-229.000.
Neumayer, Harald; and Krewenka, Roland, to EVVA-Werk Spezialerzeugung von Zylinder- und Sicherheitsschlossern Gesellschaft m.b.H. & Co. Device for electromagnetically securing a lock barrel. 5,699,686, Cl. 70-283.000.
Neumeyer, John L.; Tamagnan, Gilles; and Gao, Yigong, to Neuro Imaging Technologies, LLC. Synthesis of ferrocenyl phenyltropane analogs and their radio-transformation to technetium neuroprobes for mapping monoamine reuptake sites. 5,700,446, Cl. 424-1.850.
Neuro Imaging Technologies, LLC: *See—*
Neumeyer, John L.; Tamagnan, Gilles; and Gao, Yigong, 5,700,446, Cl. 424-1.850.
Neuro Navigational, L.L.C.: *See—*
Acosta, George M.; and Kumm, Lance, 5,700,262, Cl. 606-48.000.
New Venture Gear, Inc.: *See—*
Bowen, Thomas, 5,700,222, Cl. 475-204.000.
New York University: *See—*
Arnot, David E.; Enea, Vincenzo; Nussenzweig, Ruth S.; and Nussenzweig, Victor, 5,700,906, Cl. 530-324.000.
John, Erwin Roy, 5,699,808, Cl. 128-731.000.
Newburger, Peter E.: *See—*
Leonard, Jack L.; and Newburger, Peter E., 5,700,660, Cl. 435-69.100.
Newell Manufacturing Company: *See—*
Stark, Ivan L., 5,699,636, Cl. 49-419.000.
Newhouse, Thomas J., to Herman Miller, Inc. Information card mounted to a chair. 5,700,051, Cl. 297-188.110.
Newton, Jeffrey P., to Habour Remediation and Transfer Inc. (HR&T). Method of soil remediation. 5,700,107, Cl. 405-128.000.
Newton, Susan Elizabeth; and Clarke, Berwyn Ewart, to Glaxo Wellcome Inc. Fusion proteins. 5,700,680, Cl. 435-240.200.
Newton, T. Alex: *See—*
Caraway, Douglas; Watson, Graham; and Newton, T. Alex, 5,699,868, Cl. 175-339.000.
Ng, Chan Yiu: *See—*
Legvold, Vernon J.; Liu, Julia; Michod, Carol S.; Ng, Chan Yiu; Sherman, William G., II; Steffan, Jeffrey R.; and Van Gundy, Steven R., 5,701,429, Cl. 395-441.000.
NGK Insulators, Ltd.: *See—*
Hayashi, Shinzo, 5,701,577, Cl. 428-546.000.
NGK Spark Plug Co., Ltd.: *See—*
Inagaki, Hiroshi, 5,701,077, Cl. 324-399.000.
Yamada, Tessho; Yabuta, Katsuhisa; Kawai, Takeshi; and Toyoda, Hideki, 5,700,367, Cl. 205-785.000.
Nguyen, Son Duc: *See—*
Cornell, Julie Eileen; Diaz, Jorge Lazaro; Ho, Derek Wan Hok; Nguyen, Son Duc; and Tran, Cuong Huu, 5,701,408, Cl. 395-183.140.
Nguyen, Trung D.: *See—*
Lee, S. Daniel; Nguyen, Trung D.; and Czerwinski, Mary P., 5,701,399, Cl. 395-51.000.
NHK Spring Co., Ltd.: *See—*
Taguchi, Kohei; Ayada, Michihiko; and Shingu, Hideo, 5,701,575, Cl. 419-28.000.
Ni, Ful-Long: *See—*
Takata, Akira; Hikawa, Tetsuo; Sawada, Takashi; Yiu, Tom Dang-hsing; and Ni, Ful-Long, 5,700,975, Cl. 174-52.400.
Nichols, Jerry Ray: *See—*
Brannan, Michael H.; Garcia, Jorge Luis; Nichols, Jerry Ray; and Tokiyama, Masaru, 5,701,355, Cl. 381-169.000.
Nicholson, Colin: *See—*
Foody, Brian; Nicholson, Colin; Tolan, Jeffrey; and White, Theresa, 5,700,686, Cl. 435-263.000.
Nicholson, James Otto: *See—*
Arndt, Richard Louis; Nicholson, James Otto; Silha, Edward John; Thurber, Steven Mark; and Youngs, Amy May, 5,701,495, Cl. 395-736.000.

Nicholson, Myron Donald: *See—*
Danko, Thomas; and Nicholson, Myron Donald, 5,700,599, Cl. 429-249.000.
Danko, Thomas; and Nicholson, Myron Donald, 5,700,600, Cl. 429-249.000.
NICOX S.A.: *See—*
Soldato, Piero Del, 5,700,947, Cl. 548-491.000.
Nidek Co., Ltd.: *See—*
Yano, Nobuyuki, 5,701,197, Cl. 359-389.000.
Niedospial, John J.: *See—*
Stiehl, Mark A.; Bergstresser, William A.; and Niedospial, John J., 5,700,246, Cl. 604-198.000.
Niedzwiecki, Leon P., to TRW Vehicle Safety Systems Inc. Electrical terminal apparatus. 5,700,152, Cl. 439-78.000.
Nieling, Andreas; Frank, Wolfgang; Kissel, Holger; Koehler, Reinhard; and Mueller, Werner, to Behr GmbH & Co. Operating panel for a motor vehicle air-conditioning system. 5,700,191, Cl. 454-69.000.
Nihon Cement Co. Ltd.: *See—*
Ishikawa, Yuukou; Nishimoto, Noboru; Ootani, Michio; Tanibe, Tooru; Suzuki, Kazushige; and Kasahara, Kanesuke, 5,700,414, Cl. 264-247.000.
Nihon Kenko Zoushin Kenkyukai Corporation: *See—*
Masuda, Isamu, 5,700,234, Cl. 600-15.000.
Nihon Kohden Corporation: *See—*
Motogi, Jun; Sakai, Yoshio; and Takeda, Sunao, 5,699,807, Cl. 128-677.000.
Niikura, Keishi, to Komatsu Electronic Metals Co., Ltd. Method of feeding a dopant in a continuously charging method. 5,700,321, Cl. 117-19.000.
Niimi, Tsutomu: *See—*
Hara, Tomoyuki; Tobita, Kenichi; Niimi, Tsutomu; Amemiya, Izumi; and Takasaki, Toshiharu, 5,699,871, Cl. 180-247.000.
Nikkanen, Samuli; and Tanttu, Markku, to A. Ahlstrom Corporation. Method and apparatus for feeding air into a furnace. 5,699,746, Cl. 110-348.000.
Nikon Corporation: *See—*
Fujino, Takeshi, 5,701,530, Cl. 396-311.000.
Fukuhara, Toru; Sosa, Toshio; Dobashi, Toshio; Sasagaki, Nobuaki; and Hara, Masaharu, 5,701,519, Cl. 396-48.000.
Iwasaki, Hiroyuki, 5,701,526, Cl. 396-234.000.
Kusaka, Yosuke; Uchiyama, Shigeyuki; Yamano, Shozo; and Narisawa, Tsutomu, 5,701,524, Cl. 396-123.000.
Ohishi, Sueyuki; and Nakamura, Toshiyuki, 5,701,521, Cl. 396-52.000.
Ohtaki, Katsura, 5,701,210, Cl. 359-831.000.
Okino, Teruaki, 5,700,604, Cl. 430-5.000.
Terui, Nobuhiko, 5,701,522, Cl. 396-53.000.
Wakabayashi, Hiroshi; and Machida, Kiyosada, 5,701,528, Cl. 396-268.000.
Yokonuma, Norikazu; Kazami, Kazuyuki; Yamazaki, Youichi; and Hibino, Hideo, 5,701,529, Cl. 396-310.000.
Yoshibe, Koushi; and Kanno, Hideo, 5,701,209, Cl. 359-823.000.
Nili, Nafise: *See—*
James, David C.; Clymer, John R.; Corey, Philip D.; and Nili, Nafise, 5,701,439, Cl. 395-500.000.
Ninomiya, Takayuki, to Canon Kabushiki Kaisha. Ink jet recording method and apparatus with control of retracting and capping responsive to amount recording medium is to be conveyed. 5,701,145, Cl. 347-23.000.
Nippon Mektron Limited: *See—*
Yamamoto, Yuichi; Tatsu, Haruyoshi; Alexeevna, Volkova Margarita; Vasilyevich, Sokolov Sergey; and Vladimirovich, Veretennikov Nikolai, 5,700,879, Cl. 525-353.000.
Nippon Oil Co., Ltd.: *See—*
Ikai, Keizo; Minami, Masaki; and Matsuno, Mitsuo, 5,700,400, Cl. 252-513.000.
Nippon Paint Co., Ltd.: *See—*
Sho, Katsuhiko; Shibata, Yasuhiro; Ishii, Keizou; Imamura, Tsuyoshi; and Takeuchi, Kunihiko, 5,700,862, Cl. 524-403.000.
Nippon Shinyaku Co., Ltd.: *See—*
Hasegawa, Akira; Kiso, Makato; and Yoshikuni, Yoshiaki, 5,700,918, Cl. 536-18.700.
Nakamichi, Kouichi; Izumi, Shougo; and Yasuura, Hiroyuki, 5,700,410, Cl. 264-122.000.
Nippon Shokubai Co. Ltd.: *See—*
Kurimoto, Ikuo; Kawajiri, Tatsuya; Onodera, Hideo; Tanimoto, Michio; and Aoki, Yukio, 5,700,752, Cl. 502-311.000.
Shimasaki, Yuuji; Kanbe, Hideyuki; and Kurusu, Akira, 5,700,946, Cl. 548-231.000.
Nippon Soken, Inc.: *See—*
Kikuchi, Katsuhide; Hayashi, Hitoshi; Takeuchi, Akira; and Takigawa, Kenji, 5,700,392, Cl. 252-299.010.
Nippon Steel Corporation: *See—*
Izunome, Koji; Kawanishi, Souroku; Togawa, Shinji; Ikari, Atsushi; Sasaki, Hitoshi; and Kimura, Shigeyuki, 5,700,320, Cl. 117-19.000.
Nippon Telegraph and Telephone Corporation: *See—*
Ishida, Osamu, 5,701,371, Cl. 385-17.000.
Takashima, Youichi; Ishii, Shinji; and Yamanaka, Kiyoshi, 5,701,343, Cl. 380-4.000.
Nippon Thompson Co., Ltd.: *See—*
Takei, Seiji, 5,701,042, Cl. 310-12.000.
Nippondenso Co., Ltd.: *See—*
Green, Donald R., Jr., 5,701,595, Cl. 455-83.000.
Kato, Yasushi; Uchida, Goro; and Uemura, Yukio, 5,699,960, Cl. 237-2.00A.
Saida, Kazunori; and Yamaguchi, Hiroyuki, 5,699,851, Cl. 165-42.000.
Yonekawa, Masao; Majima, Yoshihiro; Miwa, Makoto; Minagawa, Kazuji; and Oi, Kiyotoshi, 5,699,772, Cl. 123-497.000.
Nishi, Yoko: *See—*
Yoshiuchi, Katsuhiro; Kageyama, Hiroshi; and Nishi, Yoko, 5,701,573, Cl. 399-384.000.
Nishida, Naoya: *See—*
Ishiwata, Kazuya; Watanabe, Yasuyuki; Nishida, Naoya; and Unno, Akira, 5,701,544, Cl. 396-609.000.
Nishikawa, Hideyo: *See—*
Isobe, Kazuo; Azuma, Toshikazu; Nishikawa, Hideyo; and Imamura, Takashi, 5,700,772, Cl. 510-421.000.
Nishikawa, Michinori; Miyamoto, Tsuyoshi; Kawamura, Shigeo; Yasuda, Kyouyu; Mutsuga, Yasuaki; and Matsuki, Yasuo, to Japan Synthetic Rubber Co., Ltd. Liquid crystal orienting agent. 5,700,860, Cl. 524-317.000.
Nishikawa, Yutaka: *See—*
Ikegami, Hiroshi; Nishikawa, Yutaka; and Ando, Masanori, 5,699,882, Cl. 188-73.380.
Nishimoto, Noboru: *See—*
Ishikawa, Yuukou; Nishimoto, Noboru; Ootani, Michio; Tanibe, Tooru; Suzuki, Kazushige; and Kasahara, Kanesuke, 5,700,414, Cl. 264-247.000.
Nishimura, Katsuhiko: *See—*
Hiroshima, Koichi; Nishimura, Katsuhiko; Kosaka, Toru; and Yoda, Yasuo, 5,701,568, Cl. 399-302.000.
Nishizaka, Takashi: *See—*
Lee, Shy-Fuh; Nishizaka, Takashi; and Komatsubara, Kenichi, 5,700,762, Cl. 504-292.000.
Nishizawa, Yasuo: *See—*
Arita, Setsuo; Ito, Tetsuo; Ohga, Yukiharu; Ujita, Hiroshi; Murata, Fumio; Miyake, Masao; and Nishizawa, Yasuo, 5,701,394, Cl. 395-11.000.
Nisikawa, Hiroyuki: *See—*
Eto, Yoshizumi; Murata, Nobuo; Tanabe, Kazuhiro; and Nisikawa, Hiroyuki, 5,701,581, Cl. 455-5.100.
Nissan Chemical Industries, Ltd.: *See—*
Nogami, Tatsuya; Sakai, Rie; and Hosoya, Takeshi, 5,700,391, Cl. 252-299.010.
Nissan Diesel Motor Co., Ltd.: *See—*
Notsu, Ikurou; Matsuda, Hiroshi; Hamazaki, Nobuo; Takada, Yutaka; Miyata, Tatsuji; and Nakamura, Akira, 5,699,767, Cl. 123-323.000.
Nissan Motor Co., Ltd.: *See—*
Hara, Tomoyuki; Tobita, Kenichi; Niimi, Tsutomu; Amemiya, Izumi; and Takasaki, Toshiharu, 5,699,871, Cl. 180-247.000.
Inokuchi, Iwane; Kamegaya, Shigeru; Oshidari, Toshikazu; and Sakamoto, Atsuhiro, 5,700,135, Cl. 417-269.000.
Sasaki, Hiroki, 5,701,247, Cl. 364-424.098.
Suzuki, Akito; and Ochiai, Tatsuo, 5,700,224, Cl. 477-45.000.
Nissei Plastic Industrial Co., Ltd.: *See—*
Miyairi, Kazuki, 5,700,501, Cl. 425-577.000.
Nisshin Flour Milling Co., Ltd.: *See—*
Ohneda, Akira; Sasaki, Kazuyuki; Natori, Yohei; and Nagasaki, Tomohisa, 5,700,776, Cl. 514-12.000.
Nisshinbo Industries Inc.: *See—*
Sakai, Koji, 5,700,070, Cl. 303-115.400.
Takenishi, Soichiro; Suzuki, Osamu; Yokomizo, Hirohiko; Ichihara, Tatsuo; Masuda, Gen; Nakajima, Namiko; and Komiya, Kazuko, 5,700,935, Cl. 544-139.000.
Nissho Corporation: *See—*
Miyauchi, Hidekazu; and Hiejima, Katsuhiro, 5,700,251, Cl. 604-264.000.
Nitrous Express, Inc.: *See—*
Wood, John M.; and Stewart, John T., 5,699,776, Cl. 123-531.000.
Nitta, Masao, to Ikari Corporation; and Nitta, Masao. Method and apparatus for feeding a liquid material to a tree. 5,699,635, Cl. 47-57.500.
Nitta, Shin: *See—*
Usui, Hirotake; Matsuura, Kazuya; and Nitta, Shin, 5,700,422, Cl. 266-94.000.
Nittmann, Peter H., to Albani Bayeux, Inc. Method and apparatus for precision pattern knitting on a warp knitting machine. 5,699,681, Cl. 66-213.000.
Nitto Chemical Industry Co., Ltd.: *See—*
Shimizu, Shigeru; Saitoh, Takashi; Uzawa, Masashi; and Takayanagi, Yasuyuki, 5,700,399, Cl. 252-500.000.
Nitto Denko Corporation: *See—*
Sugimoto, Toshihiko; Miyake, Chiharu; and Miki, Yousuke, 5,700,562, Cl. 428-327.000.
Nix, Stefan: *See—*
Wolf, Franz Josef; Mohr, Martin; and Nix, Stefan, 5,700,000, Cl. 267-140.130.
Nixon, Douglas Fraser: *See—*
McMichael, Andre James; Nixon, Douglas Fraser; Townsend, Alain Robert Michael; and Gotch, Frances Margaret, 5,700,469, Cl. 424-[illegible].100.
McMichael, Andrew James; Nixon, Douglas Fraser; and Townsend, Alain Robert Michael, 5,700,635, Cl. 435-5.000.
Nizar, P. K.; and Carson, David, to Intel Corporation. Multi-processor computer system with interrupt controllers providing remote reading. 5,701,496, Cl. 395-739.000.
Nizzo, Vincent J.: *See—*

Rath, James; Tran, William Luong-Gia; Flynn, Kathy M.; Tara, Vinai Ming; Koes, Thomas A.; and Nizzo, Vincent J., 5,700,607, Cl. 430-15.000.
Njoroge, F. George: *See—*
Doll, Ronald J.; and Njoroge, F. George, 5,700,806, Cl. 514-290.000.
NKK Corporation: *See—*
Shiomitsu, Tohru; Manabe, Yasuhiko; Ogawa, Takashi; Takita, Yusaku; and Ishihara, Tatsumi, 5,700,361, Cl. 204-491.000.
Noble, James K. Snowmobile steering ski. 5,700,020, Cl. 280-28.000.
Noda, Wayne A.: *See—*
Buelna, Terrence J.; Noda, Wayne A.; and Lubock, Paul, 5,700,273, Cl. 606-148.000.
NOF Corporation: *See—*
Suzuki, Masao; Saito, Koichi; and Nakata, Masahide, 5,700,396, Cl. 253-309.000.
Nogami, Sumitaka; Kitazawa, Michihiro; and Sato, Katsuhiro, to Fuji Electric Co., Ltd. Photoconductor for electrophotography. 5,700,613, Cl. 430-58.000.
Nogami, Tadahiko; Nakamura, Ichiro; Hiraku, Kenji; Sadamori, Hiroyuki; Yasuda, Kenichi; Narita, Kenjiro; Horii, Kenji; and Shimogama, Hironori, to Hitachi, Ltd. Widthwise compressing machine and method using vibrations to reduce material width. 5,699,693, Cl. 72-199.000.
Nogami, Tatsuya; Sakai, Rie; and Hosoya, Takeshi, to Nissan Chemical Industries, Ltd. Liquid coating composition forming a liquid crystal display element insulating film. 5,700,391, Cl. 252-299.010.
Noguchi, Fuminobu: *See—*
Uyama, Haruo; Harada, Takahiro; Kano, Mitsuru; Matsudaira, Nagahisa; Hoshino, Kazuhisa; Kitamura, Satoshi; Noguchi, Fuminobu; and Shikakubo, Tsutomu, 5,700,550, Cl. 428-212.000.
Noguchi, Masayoshi: *See—*
Ichimura, Gen; and Noguchi, Masayoshi, 5,701,124, Cl. 341-50.000.
Nohr, Ronald Sinclair; and MacDonald, John Gavin, to Kimberly-Clark Worldwide. Colorant compositions and colorant stabilizers. 5,700,850, Cl. 522-34.000.
Nojima, Norichika: *See—*
Iwanaga, Shin-ichiro; Shingae, Shigeru; Morita, Takasi; Ishikawa, Osamu; and Nojima, Norichika, 5,700,852, Cl. 523-201.000.
Nokia Mobile Phones Limited: *See—*
Bath, Gareth John Richard; and Ring, Steven Richard, 5,701,594, Cl. 455-78.000.
Pikkarainen, Juha; and Kontas, Veijo, 5,701,166, Cl. 332-100.000.
Nolet, Roch: *See—*
Jacques, Michel; and Nolet, Roch, 5,699,926, Cl. 220-6.000.
Nomori, Hiroyuki: *See—*
Endo, Isao; Komatsu, Toru; Sato, Yotaro; Nomori, Hiroyuki; Shigeta, Kunio; and Onodera, Masahiro, 5,701,553, Cl. 399-55.000.
Nomura, Hiroshi: *See—*
Sasaki, Takamitsu; and Nomura, Hiroshi, 5,701,206, Cl. 359-704.000.
Nomura, Osamu: *See—*
Nagashima, Tetsuro; Kawanishi, Toshiharu; Okutani, Shigeaki; Nomura, Osamu; and Iino, Takashi, 5,701,436, Cl. 395-489.000.
Nonweiler, Mark A.; Konrad, Gregory F.; and Wiatrowski, Dennis A., to Konrad, Gregory F. Aqueous emulsion-based coating compositions. 5,700,522, Cl. 427-388.400.
Nordson Corporation: *See—*
Fort, Wesley C., 5,700,322, Cl. 118-50.000.
Koch, Dean; and Shutic, Jeff, 5,700,323, Cl. 118-308.000.
Siddiqui, Shahid A.; Ziecker, Roger A.; Wagner, Karen M.; and Nassar, Jocelyne, 5,699,938, Cl. 222-146.500.
NOREL: *See—*
Vaccarello, Ronald, 5,699,645, Cl. 53-139.500.
Norimatsu, Hidehiko, to NEC Corporation. Radio apparatus having a plurality of antennas. 5,701,603, Cl. 455-277.100.
Noritsu Koki Co., Ltd.: *See—*
Arimoto, Keigo, 5,701,543, Cl. 396-620.000.
Norris, Kevin E.: *See—*
VanSelous, Joseph S.; Haggerty, Judith F.; and Norris, Kevin E., 5,700,218, Cl. 475-12.000.
North Dakota State University: *See—*
Jones, Frank N.; Du, Cong; Teng, Ganghui; Dimian, Adel F.; and Wang, Daozhang, 5,700,882, Cl. 525-440.000.
North Shore University Hospital Research Corporation: *See—*
Breitbart, Arnold S.; and Grande, Daniel A., 5,700,289, Cl. 623-16.000.
Norton, Larry A., to United Dominion Industries, Inc. Double seat flow control valve. 5,699,825, Cl. 137-238.000.
Norum, James Patrick: *See—*
Wu, Jin Jwang; Cavaliere, William Albert; Norum, James Patrick; and Schmitz, Stefan, 5,699,679, Cl. 62-617.000.
Notsu, Ikurou; Matsuda, Hiroshi; Hamazaki, Nobuo; Takada, Yutaka; Miyata, Tatsuji; and Nakamura, Akira, to Nissan Diesel Motor Co., Ltd. Gas engine. 5,699,767, Cl. 123-323.000.
Nova Solutions, Inc.: *See—*
Lechman, John N., 5,699,744, Cl. 108-109.000.
Novartis Corporation: *See—*
Altmann, Karl-Heinz; Imwinkelried, René; and Eschenmoser, Albert, 5,700,920, Cl. 536-221.000.
Novavax, Inc.: *See—*
Wright, D. Craig, 5,700,679, Cl. 435-238.000.
Novell, Inc.: *See—*
Millett, Ronald P.; Tuck, Robin P.; Dennis, Blaine S.; and Robertson, David O., 5,701,459, Cl. 395-603.000.
Novo Nordisk A/S: *See—*
Damhus, Ture; Kirk, Ole; Pedersen, Gitte; and Venegas, Manuel Garcia, 5,700,770, Cl. 510-305.000.
Jørgensen, Tony; and Pedersen, Anders Hjelholt, 5,700,914, Cl. 530-412.000.
Schneider, Palle; Conrad, Lars Sparre; Ebdrup, Søren; and Yde, Birgitte, 5,700,769, Cl. 510-305.000.
Novotný , Vojtěch: *See—*
Špindler, Zdeněk; Novotný , Vojtěch; and Semrád, Petr, 5,699,971, Cl. 242-35.60E.
Nowak, Edward D.; Loh, Ying-Tsong; and Ding, Lily, to VLSI Technology, Inc. Method of reducing contact resistance for semiconductor manufacturing processes using tungsten plugs. 5,700,717, Cl. 437-192.000.
Nowak, Michael T.: *See—*
Menhennett, Herbert E.; Barlage, William Berdell, III; and Nowak, Michael T., 5,700,406, Cl. 264-40.400.
Nowak, Stefan: *See—*
Schmitt, Franz; and Nowak, Stefan, 5,701,076, Cl. 324-322.000.
Nozawa, Minoru, to Canon Kabishiki Kaisha. Ink jet head and ink jet apparatus using same. 5,701,147, Cl. 347-58.000.
Nozoe, Atsusi: *See—*
Oguchi, Satoshi; Ishihara, Masamichi; Ito, Kazuya; Murakami, Gen; Anjoh, Ichiro; Sakuta, Toshiyuki; Yamaguchi, Yasunori; Kasama, Yasuhiro; Udagawa, Tetsu; Miyamoto, Eiji; Matsuno, Youichi; Satoh, Hiroshi; and Nozoe, Atsusi, 5,701,031, Cl. 257-686.000.
NSK, Ltd.: *See—*
Fukunaga, Yuichiro, 5,700,032, Cl. 280-775.000.
Miyaura, Yasuhiko, 5,699,874, Cl. 180-443.000.
Nugent, Steve: *See—*
Nedwek, David J.; Wilson, Howard; Nugent, Steve; and Dermer, Greg, 5,701,420, Cl. 395-284.000.
Numabe, Hideo: *See—*
Satoh, Mitsuyoshi; Numabe, Hideo; and Matsuda, Hideaki, 5,700,096, Cl. 400-225.000.
Numrich, Uwe: *See—*
Müller, Michael; Benz, Volker; Numrich, Uwe; Pühler, Horst; and Wopker, Wilhelm, 5,700,566, Cl. 428-332.000.
Nussenzweig, Ruth S.: *See—*
Arnot, David E.; Enea, Vincenzo; Nussenzweig, Ruth S.; and Nussenzweig, Victor, 5,700,906, Cl. 530-324.000.
Nussenzweig, Victor: *See—*
Arnot, David E.; Enea, Vincenzo; Nussenzweig, Ruth S.; and Nussenzweig, Victor, 5,700,906, Cl. 530-324.000.
Nutt, Ruth F.: *See—*
Hirschmann, Ralph F.; Spanevello, Rolando A.; and Nutt, Ruth F., 5,700,905, Cl. 530-311.000.
NV Raychem SA: *See—*
Van Beersel, Jozef, 5,700,530, Cl. 428-35.900.
Nycomed Imaging AS: *See—*
Golman, Klaes; Andersson, Sven; Rise, Frode; Wistrand, Lars-Goran; and Wikstrom, Hakan, 5,700,448, Cl. 424-9.330.
Oakes, Barry L., Jr.: *See—*
Mills, Shannon E.; Shaffer, Randy; Freeman, Michael T.; Plamondon, Thomas J.; and Oakes, Barry L., Jr., 5,700,147, Cl. 433-98.000.
Oakwood Group, The: *See—*
Audi, Richard Francois; Smith, Donald Scott; Carroll, Phillip Patrick, III; and Rossi, Michael Anthony, 5,700,545, Cl. 428-131.000.
O'Brien, John S., to University of California, The Regents of the. Prosaposin and cytokine-derived peptides. 5,700,909, Cl. 530-326.000.
Ochiai, Tatsuo: *See—*
Suzuki, Akito; and Ochiai, Tatsuo, 5,700,224, Cl. 477-45.000.
Oda, Takashi: *See—*
Takiguchi, Osamu; Hori, Naomi; and Oda, Takashi, 5,700,892, Cl. 526-306.000.
O'Dell, Ronald J.; and Zamolo, Craig J. Aperatus for restraining violent detainees. 5,699,747, Cl. 128-869.000.
O'Donnell, Garry: *See—*
Ogier, Ray; and O'Donnell, Garry, 5,699,730, Cl. 100-233.000.
OEM/Miller Corporation: *See—*
Scarazzo, Christopher; and Mears, Lawrence N., 5,700,493, Cl. 425-116.000.
Ogata, Kazumi; Sakaue, Takahiro; and Sameshima, Shogo, to Senju Pharmaceutical Co., Ltd. Antiallergic composition comprising a phosphoric diester compound. 5,700,789, Cl. 514-100.000.
Ogawa, Hitoshi, to Matsushita Electric Works, Ltd. Electric hair trimmer. 5,699,616, Cl. 30-201.000.
Ogawa, Kazuo; Enomoto, Takaaki; Kawai, Masato; Kato, Minoru; and Sato, Kunihito, to Toyota Jidosha Jabushiki Kaisha. Suspension control system. 5,701,245, Cl. 364-424.046.
Ogawa, Takashi: *See—*
Shiomitsu, Tohru; Manabe, Yasuhiko; Ogawa, Takashi; Takita, Yusaku; and Ishihara, Tatsumi, 5,700,361, Cl. 204-491.000.
Ogawa, Youzou: *See—*
Mano, Junichi; Ogawa, Youzou; Mabuchi, Masaki; Okuno, Keizou; and Totsuka, Nobuo, 5,700,561, Cl. 428-327.000.
Ogawara, Toshiki: *See—*
Yokozawa, Shinjiro; Kodama, Nobumasa; and Ogawara, Toshiki, 5,701,045, Cl. 310-62.000.
Ogier, Ray; and O'Donnell, Garry, to Chem Financial, Inc. Bag squeezer. 5,699,730, Cl. 100-233.000.

Ogihara, Mitsuhiko; Nakamura, Yukio; Koizumi, Masumi; and Taninaka, Masumi, to Oki Electric Industry Co., Ltd. Diffusion mask and fabrication method for forming pn-junction elements in a compound semiconductor substrate. 5,700,714, Cl. 437-167.000.
Ogino, Kazuya; Yokoyama, Kaneo; Hayashi, Narutoshi; Omura, Takashi; and Yamamoto, Setsuko, to Sumitomo Chemical Company, Limited. Azo compound and a polarizing film containing the same. 5,700,296, Cl. 8-489.000.
Ogino, Takao: *See—*
Ishii, Hitoshi; and Ogino, Takao, 5,700,334, Cl. 148-273.000.
Oguchi, Satoshi; Ishihara, Masamichi; Ito, Kazuya; Murakami, Gen; Anjoh, Ichiro; Sakuta, Toshiyuki; Yamaguchi, Yasunori; Kasama, Yasuhiro; Udagawa, Tetsu; Miyamoto, Eiji; Matsuno, Youichi; Satoh, Hiroshi; and Nozoe, Atsusi, to Hitachi, Ltd. Sealed stacked arrangement of semiconductor devices. 5,701,031, Cl. 257-686.000.
Oguma, Toshio; Okazaki, Yoshinobu; Tada, Osamu; and Yokotani, Shigeki, to Hitachi, Ltd. System for evaluating the results of logic simulation. 5,701,443, Cl. 395-500.000.
Ogura, Masatsune; Chiba, Shizuo; and Ohtera, Kayoko, to DuPont-Mitsui Fluorochemicals Co., Ltd. Aqueous emulsion of fluorocarbon polymer and method for producing the same. 5,700,859, Cl. 524-314.000.
Ogura, Shiro: *See—*
Matsumoto, Toshio; Baba, Hiroshi; Itoh, Kazuhiko; and Ogura, Shiro, 5,701,406, Cl. 395-182.040.
Matsumoto, Toshio; Baba, Hiroshi; Itoh, Kazuhiko; and Ogura, Shiro, 5,701,407, Cl. 395-182.050.
Oh, Chang Whan: *See—*
Jeon, Byung Chun; Do, Mi Sun; Park, Chun Kwan; Oh, Chang Whan; and Kim, Young Sun, 5,701,300, Cl. 370-392.000.
Oh, Kil-Hwan: *See—*
Han, Chul-Hi; Kim, Choong-Ki; Lee, Jung-Yeal; and Oh, Kil-Hwan, 5,700,699, Cl. 437-21.000.
Ohanesian, Harout, to U.S. Polymers, Inc. Wand-controlled split-draw vertical blind headrail. 5,699,846, Cl. 160-168.10V.
Ohba, Toshio: *See—*
Aoki, Shunji; Ohba, Toshio; Hara, Yasuaki; and Itoh, Kunio, 5,700,899, Cl. 528-37.000.
Ohga, Yukiharu: *See—*
Arita, Setsuo; Ito, Tetsuo; Ohga, Yukiharu; Ujita, Hiroshi; Murata, Fumio; Miyake, Masao; and Nishizawa, Yasuo, 5,701,394, Cl. 395-11.000.
Ohguri, Noriaki: *See—*
Ouchi, Toshihiko; Sakata, Hajime; Ohguri, Noriaki; and Uchida, Mamoru, 5,701,325, Cl. 372-96.000.
Ohio State University, The: *See—*
Gerber, Nicholas; Apseloff, Glen; and Mullet, Daniel L., 5,700,487, Cl. 424-650.000.
Ohira, Hideo; Murakami, Tokumichi; Asai, Kohtaro; and Shimada, Toshiaki, to Mitsubishi Denki Kabushiki Kaisha. Digital image decoding apparatus. 5,701,158, Cl. 348-410.000.
Ohira, Hideo; Murakami, Tokumichi; Asai, Kohtaro; and Shimada, Toshiaki, to Mitsubishi Denki Kabushiki Kaisha. Digital image decoding apparatus. 5,701,159, Cl. 348-410.000.
Ohishi, Sueyuki; and Nakamura, Toshiyuki, to Nikon Corporation. Photographic device having a vibration compensation function with reduced power consumption. 5,701,521, Cl. 396-52.000.
Ohki, Naoyuki: *See—*
Miyamoto, Kazuki; Ohki, Naoyuki; Nakano, Masaki; Ushiro, Takahiro; Fukazu, Yasuo; Chaki, Atsushi; Takata, Shinichi; and Ohyoshi, Kazuhiro, 5,701,402, Cl. 395-115.000.
Ohkubo, Masahiro, to Exedy Corporation. Vehicle power transmission mechanism. 5,700,219, Cl. 475-47.000.
Ohmeda Inc.: *See—*
Bathe, Duncan P. L.; Montgomery, Frederick J.; and Roehl, Robin L., 5,699,790, Cl. 128-204.220.
Ohmori, Koichi; Yamamoto, Toshiyoshi; Matsuda, Yuji; Tanji, Yoshihiko; and Yuuzu, Takayoshi, to Matsushita Electric Industrial Co., Ltd. apparatus for picking up image by electromagnetic wave ray. 5,701,011, Cl. 250-370.090.
Ohneda, Akira; Sasaki, Kazuyuki; Natori, Yohei; and Nagasaki, Tomohisa, to Nisshin Flour Milling Co., Ltd. Medicaments comprising glicentin as active ingredient. 5,700,776, Cl. 514-12.000.
Ohnishi, Toshikazu: *See—*
Miyazaki, Takeshi; Tanaka, Kazumi; Santo, Tsuyoshi; Ohnishi, Toshikazu; Fukui, Tetsuro; and Okamoto, Tadashi, 5,700,647, Cl. 435-6.000.
Oho, Shigeru: *See—*
Kumagai, Tatsuya; Kajioka, Hiroshi; Kobayashi, Osamu; Akiyama, Munehiro; Oho, Shigeru; and Sonobe, Hisao, 5,701,177, Cl. 356-350.000.
Ohsawa, Takashi, to Kabushiki Kaisha Toshiba. High speed, low noise CMOS multiplexer with precharge. 5,701,095, Cl. 327-410.000.
Ohshima, Masamichi: *See—*
Aratani, Shuntaro; Ohshima, Masamichi; and Suga, Kazumi, 5,701,135, Cl. 345-89.000.
Ohta, Mitsuhiko: *See—*
Kawasaki, Naoki; Ohta, Mitsuhiko; and Ikeya, Toshiaki, 5,699,777, Cl. 123-580.000.
Ohtaki, Katsura, to Nikon Corporation. Achromatic optical system for beam transformation and optical disk apparatus using the same. 5,701,210, Cl. 359-831.000.
Ohtera, Kayoko: *See—*
Ogura, Masatsune; Chiba, Shizuo; and Ohtera, Kayoko, 5,700,859, Cl. 524-314.000.
Ohyoshi, Kazuhiro: *See—*
Miyamoto, Kazuki; Ohki, Naoyuki; Nakano, Masaki; Ushiro, Takahiro; Fukazu, Yasuo; Chaki, Atsushi; Takata, Shinichi; and Ohyoshi, Kazuhiro, 5,701,402, Cl. 395-115.000.
Oi, Kiyotoshi: *See—*
Yonekawa, Masao; Majima, Yoshihiro; Miwa, Makoto; Minagawa, Kazuji; and Oi, Kiyotoshi, 5,699,772, Cl. 123-497.000.
Oishi, Akihiro: *See—*
Taguchi, Yoichi; Oishi, Akihiro; Shibuya, Isao; and Tsuchiya, Tohru, 5,700,931, Cl. 540-203.000.
Oishi, Kanemitsu: *See—*
Masui, Shohei; Oishi, Kanemitsu; and Mitsui, Kiyoshi, 5,700,416, Cl. 264-325.000.
Oishi, Tadahiro; Onishi, Toshifumi; and Yoshioka, Yasuo, to Shoei Printing Co., Ltd.; Toyobo Co., Ltd.; and Marusho Co., Ltd. Identification card and its manufacture. 5,701,002, Cl. 235-487.000.
Oji-Yuka Synthetic Paper Co., Ltd.: *See—*
Iguchi, Fumio, 5,699,625, Cl. 34-62.000.
Oka, Yasuhiro: *See—*
Tomooka, Yutaka; and Oka, Yasuhiro, 5,699,585, Cl. 15-327.200.
Okabe, Keiichiro: *See—*
Iga, Katsumi; Yanai, Shigeo; Okabe, Keiichiro; and Itoh, Masaki, 5,700,481, Cl. 424-449.000.
Okabe, Toshiaki, to Yazaki Corporation. Press-connecting connector with integral cover. 5,700,163, Cl. 439-596.000.
Okabe, Toshiaki: *See—*
Hatagishi, Yuji; Yamamoto, Toshihiko; Abe, Kimihiro; and Okabe, Toshiaki, 5,700,162, Cl. 439-595.000.
Okada, Hirokazu: *See—*
Neilson, Eric G.; Danoff, Theodore; Okada, Hirokazu; and Strutz, Frank, 5,700,690, Cl. 435-320.100.
Okada, Jouji; Kawamata, Akira; Tokunaga, Tadayuki; Nagatani, Noboru; Torizuka, Makoto; and Asahi, Masahiko, to Kao Corporation. Fluorine-modified silicone derivative, production thereof, and cosmetic containing the same. 5,700,898, Cl. 528-25.000.
Okada, Takekazu; Maruyama, Yuichi; and Sayanagi, Kazuya, to Murata Manufacturing Co., Ltd. Antenna-integrated strip line cable. 5,701,128, Cl. 343-700.0MS.
Okada, Yasushi, to Ricoh Company, Ltd. Carriage locking mechanism for an optical disk drive including a yoke member having a notch formed thereon. 5,701,290, Cl. 369-263.000.
Okado, Kenji: *See—*
Takiguchi, Tsuyoshi; Okado, Kenji; Taya, Masaaki; Fujita, Ryoichi; Kanbayashi, Makoto; Iida, Wakashi; and Ida, Tetsuya, 5,700,617, Cl. 430-110.000.
Okadome, Youichi: *See—*
Ota, Masaki; Okadome, Youichi; Kobayashi, Hisakazu; and Hamasaki, Masaru, 5,699,716, Cl. 92-12.200.
Okajima, Michio; and Tohda, Takao, to Matsushita Electric Industrial Co., Ltd. Light-emitting thin film and thin film EL device. 5,700,591, Cl. 428-690.000.
Okajima, Takao: *See—*
Katayama, Yasushi; Maeda, Kouji; Nakai, Ryozo; Muroi, Yoshiyuki; and Okajima, Takao, 5,700,449, Cl. 424-49.000.
Okamoto, Atsuhumi: *See—*
Furugen, Munekatsu; Hamazaki, Shotaro; Kameoka, Norimasa; and Okamoto, Atsuhumi, 5,699,690, Cl. 72-69.000.
Okamoto, Tadashi: *See—*
Miyazaki, Takeshi; Tanaka, Kazumi; Santo, Tsuyoshi; Ohnishi, Toshikazu; Fukui, Tetsuro; and Okamoto, Tadashi, 5,700,647, Cl. 435-6.000.
Okanoue, Kazuhiro; and Ushirokawa, Akihisa, to NEC Corporation. Diversity receiver in which reception characteristics can be improved. 5,701,333, Cl. 375-347.000.
Okatani, Toru, to Minolta Co., Ltd. Copying system using a remote device for controlling an operation of a copier. 5,701,548, Cl. 399-8.000.
Okauchi, Ken: *See—*
Ueda, Yutaka; Okauchi, Ken; and Koboshi, Shigeharu, 5,701,541, Cl. 396-569.000.
Okazaki, Masahide, to Dainippon Screen Manufacturing Co., Ltd. Apparatus for scanning drum inner face and method of scanning therefor. 5,701,201, Cl. 359-487.000.
Okazaki, Shinji: *See—*
Hasegawa, Norio; Terasawa, Tsuneo; Fukuda, Hiroshi; Hayano, Katsuya; Imai, Akira; Moniwa, Akemi; and Okazaki, Shinji, 5,700,601, Cl. 430-5.000.
Okazaki, Yoshinobu: *See—*
Oguma, Toshio; Okazaki, Yoshinobu; Tada, Osamu; and Yokotani, Shigeki, 5,701,443, Cl. 395-500.000.
Oki Electric Industry Co., Ltd.: *See—*
Nakanishi, Eiichi; and Onodera, Tetsuo, 5,701,597, Cl. 455-127.000.
Ogihara, Mitsuhiko; Nakamura, Yukio; Koizumi, Masumi; and Taninaka, Masumi, 5,700,714, Cl. 437-167.000.
Okino, Teruaki, to Nikon Corporation. Charged particle beam exposure method and mask employed therefor. 5,700,604, Cl. 430-5.000.
Okita, Tsutomu; and Ishida, Toshio, to Fuji Photo Film Co., Ltd. Magnetic recording medium. 5,700,541, Cl. 428-65.400.

Okuda, Tadayuki, to Koito Manufacturing Co., Ltd. Vehicular lamp. 5,700,080, Cl. 362-80.000.
Okumura, Hideki; Sakamoto, Kazunori; Kobata, Kiyoshi; and Kubota, Kazunori, to Matsushita Electric Industrial Co., Ltd. Tape cassette having a minimized clamp set. 5,701,225, Cl. 360-132.000.
Okumura, Yoshinobu; and Yang, Xingbo, to Kubota Corporation. Metal thin film magnetic recording medium and manufacturing method thereof. 5,700,593, Cl. 428-694.0TS.
Okuno, Keizou: *See—*
  Mano, Junichi; Ogawa, Youzou; Mabuchi, Masaki; Okuno, Keizou; and Totsuka, Nobuo, 5,700,561, Cl. 428-327.000.
Okuno, Shiho: *See—*
  Saito, Yoshiaki; Okuno, Shiho; and Inomata, Koichiro, 5,700,588, Cl. 428-611.000.
Okutani, Shigeaki: *See—*
  Nagashima, Tetsuro; Kawanishi, Toshiharu; Okutani, Shigeaki; Nomura, Osamu; and Iino, Takashi, 5,701,436, Cl. 395-489.000.
Okuyama, Kojiro; Shimoyama, Koji; Kawashima, Syunichiro; and Kugimiya, Koichi, to Matsushita Electric Industrial Co., Ltd. Dielectric ceramic compositions and dielectric resonators. 5,700,745, Cl. 501-134.000.
Oldsen, John G.: *See—*
  Castle, Brian R.; Scott, James J.; and Oldsen, John G., 5,699,572, Cl. 7-138.000.
Oleskevich, Tanya, to SDL, Inc. Method for improving the coupling efficiency of elliptical light beams into optical waveguides. 5,701,373, Cl. 385-33.000.
Olgiati, Stéphane: *See—*
  Koelemeijer, Alexandra; Knuchel, Bernard; Letoublon, Laurent; and Olgiati, Stéphane, 5,700,963, Cl. 84-95.100.
Olive, Eric: *See—*
  Grimard, Jean Pierre; and Olive, Eric, 5,700,247, Cl. 604-220.000.
Olivera, Baldomero M.; Rivier, Jean E.F.; Cruz, Lourdes J.; Abogadie, Fe; Hopkins, Chris E.; Dykert, John; and Torres, Josep L., to Salk Institute for Biological Studies, The; and University of Utah Research Foundation. Conotoxins I. 5,700,778, Cl. 514-12.000.
Olson, Kenneth F.: *See—*
  Brewer, James E.; Olson, Kenneth F.; Stolte, John F.; Utke, Nora J.; and Stendahl, Gary B., 5,700,281, Cl. 607-5.000.
Oltmann, J. Richard: *See—*
  Kelly, Bryan M.; Petermeier, Norman B.; Kelly, Matthew F.; and Oltmann, J. Richard, 5,700,007, Cl. 273-118.00A.
Olympus Optical Co., Ltd: *See—*
  Nakamura, Shinichi, 5,701,196, Cl. 359-362.000.
  Sakabe, Namiko; Ishimaru, Toshiaki; Kobayashi, Yoshiaki; and Suzuki, Takashi, 5,701,527, Cl. 396-277.000.
  Suzuki, Tatsuya; and Miyazaki, Hiroaki, 5,701,533, Cl. 396-349.000.
  Takahashi, Hideaki, 5,701,285, Cl. 369-59.000.
  Takahashi, Koichi, 5,701,202, Cl. 359-631.000.
  Takato, Hideyasu, 5,701,199, Cl. 359-432.000.
Olympus Winter & Ibe GmbH: *See—*
  Benecke, Rainer, 5,700,276, Cl. 606-208.000.
Omiya, Akio; and Kamoda, Takashi, to Fuji Photo Optical Co., Ltd. Lens barrel. 5,701,523, Cl. 396-83.000.
Omura, Takashi: *See—*
  Ogino, Kazuya; Yokoyama, Kaneo; Hayashi, Narutoshi; Omura, Takashi; and Yamamoto, Setsuko, 5,700,296, Cl. 8-489.000.
Onan Corporation: *See—*
  Schultz, Mark H., 5,701,070, Cl. 322-37.000.
Onderdonk, Andrew B.: *See—*
  Tzianabos, Arthur O.; Onderdonk, Andrew B.; and Kasper, Dennis L., 5,700,787, Cl. 514-54.000.
O'Neill, Robert: *See—*
  Stanford, Thomas H.; Sahne, Farhad Noroozi; Riches, Thomas P.; and O'Neill, Robert, 5,701,356, Cl. 381-187.000.
Onishi, Toshifumi: *See—*
  Oishi, Tadahiro; Onishi, Toshifumi; and Yoshioka, Yasuo, 5,701,002, Cl. 335-487.000.
Ono, Katsuhiro: *See—*
  Tanaka, Yoshiharu; Tanii, Junichi; and Ono, Katsuhiro, 5,701,531, Cl. 396-319.000.
Ono, Masayosi: *See—*
  Kaji, Masanori; Ono, Masayosi; Takabatake, Yosinobu; Kaido, Yosinori; Haga, Takahiro; and Hikosaka, Masaru, 5,701,067, Cl. 320-2.000.
Onodera, Hideo: *See—*
  Kurimoto, Ikuo; Kawajiri, Tatsuya; Onodera, Hideo; Tanimoto, Michio; and Aoki, Yukio, 5,700,752, Cl. 502-311.000.
Onodera, Masahiro: *See—*
  Endo, Isao; Komatsu, Toru; Sato, Yotaro; Nemori, Hiroyuki; Shigeta, Kunio; and Onodera, Masahiro, 5,701,553, Cl. 399-55.000.
Onodera, Tetsuo: *See—*
  Nakanishi, Eiichi; and Onodera, Tetsuo, 5,701,597, Cl. 455-127.000.
Ontogen Corporation: *See—*
  Mjalli, Adnan; and Sarshar, Sepehr, 5,700,826, Cl. 514-397.000.
Ooguro, Yoshihisa: *See—*
  Yamauchi, Satoshi; Tamura, Hiroshi; Kataoka, Takashi; Tsumura, Naoki; Hikichi, Naoto; Narumi, Chihiro; Ezaki, Takashi; Kudo, Shozo; and Ooguro, Yoshihisa, 5,701,497, Cl. 395-753.000.
Ooishi, Mitsuma, to NEC Corporation. Process of fabricating field effect transistor having reliable polycide gate electrode. 5,700,734, Cl. 438-592.000.
Oomori, Katsumi: *See—*
  Sato, Mitsuru; Oomori, Katsumi; Ishikawa, Kiyoshi; Iguchi, Etsuko; and Kaneko, Fumitake, 5,700,625, Cl. 430-270.100.
Ootaka, Yoshimitsu; Kato, Tomoyuki; and Sato, Katsutoshi, to Kabushiki Kaisha TEC. Cleanerless image forming apparatus using an electrophotographic process. 5,701,559, Cl. 399-149.000.
Ootani, Michio: *See—*
  Ishikawa, Yuukou; Nishimoto, Noboru; Ootani, Michio; Tanibe, Tooru; Suzuki, Kazushige; and Kasahara, Kanesuke, 5,700,414, Cl. 264-247.000.
Oppenlaender, Knut: *See—*
  Schuhmacher, Rudolf; Dralle-Voss, Gabriele; Oppenlaender, Knut; Wegner, Brigitte; and Hohmann, Andreas, 5,700,351, Cl. 162-75.000.
Oppermann, Hermann: *See—*
  Crea, Roberto; Pang, Roy Hoi Loi; Oppermann, Hermann; Keck, Peter C.; Alvarado-Urbina, Gabriel; Wu, Gay-May; and Cohen, Charles M., 5,700,677, Cl. 435-226.000.
Optec Co., Ltd.: *See—*
  Hiroki, Toyohisa; and Suzuki, Tadashi, 5,700,415, Cl. 264-318.000.
Optical Sensors Incorporated: *See—*
  Klainer, Stanley M.; Walt, David R.; and Gottlieb, Amos J., 5,700,897, Cl. 528-15.000.
Oravecz, Michael G.: *See—*
  Sauer, Jude S.; Greenwald, Roger J.; Oravecz, Michael G.; and Kobilansky, Alex, 5,700,236, Cl. 600-175.000.
Orensteen, Bruce D.: *See—*
  Dreyer, John F., Jr.; Bradshaw, Thomas I.; Burns, David M.; Pavelka, Lee A.; and Orensteen, Bruce D., 5,700,077, Cl. 362-32.000.
Orfi, Laszlo: *See—*
  Hirth, Klaus Peter; Schwartz, Donna Pruess; Mann, Elaina; Shawver, Laura Kay; Keri, Gyorgi; Szekely, Istvan; Bajor, Tamas; Haimichael, Janis; Orfi, Laszlo; Levitzki, Alex; Gazit, Aviv; Ullrich, Axel; Lammers, Reiner; Kabbinavar, Fairooz F.; Slamon, Dennis; and Tang, Peng Cho, 5,700,822, Cl. 514-380.000.
  Hirth, Klaus Peter; Schwartz, Donna Pruess; Mann, Elaina; Shawver, Laura Kay; Kéri, György; Székely, István; Bajor, Tamás; Haimichael, Janis; Orfi, László; Levitzki, Alex; Gazit, Aviv; Ullrich, Axel; and Lammers, Reiner, 5,700,823, Cl. 514-380.000.
Orimoto, Takashi: *See—*
  Yamane, Kazuyasu; and Orimoto, Takashi, 5,701,580, Cl. 455-3.100.
Orlowska, Anna Helena; Bradshaw, Thomas William; and Baynham, David Elwyn, to British Technology Group Limited. Magnet arrangement, and drive device and cooling apparatus incorporating same. 5,701,040, Cl. 310-13.000.
Orsini, Francois: *See—*
  Denis, Sophie; Orsini, Francois; Tarascon, Jean-Marie; and Touboul, Marcel, 5,700,598, Cl. 429-218.000.
Ortner, Robert: *See—*
  Hummel, Peter; and Ortner, Robert, 5,699,737, Cl. 101-247.000.
Orvedahl, Donna S.: *See—*
  Chan, Andy D. C.; Boden, Mark W.; Benco, John S.; Bergquist, Robert A.; and Orvedahl, Donna S., 5,700,360, Cl. 204-400.000.
Osanai, Eiji: *See—*
  Akutsu, Kotaro; Osanai, Eiji; and Kamata, Shigeto, 5,701,041, Cl. 310-12.000.
Osanai, Hisashi: *See—*
  Nakagawa, Tsuguhiko; Yamagùchi, Ryosuke; Osanai, Hisashi; Hasunuma, Junichi; and Yamamoto, Takemi, 5,700,420, Cl. 266-44.000.
Osbern, Lida N. Heating device for heating a gel container received therein. 5,700,991, Cl. 219-430.000.
Oshidari, Toshikazu: *See—*
  Inokuchi, Iwane; Kamegaya, Shigeru; Oshidari, Toshikazu; and Sakamoto, Atsuhiro, 5,700,135, Cl. 417-269.000.
Oshima, Hironobu; and Matumori, Hiroyuki, to Sanyo Electric Co., Ltd. Atomizer system. 5,699,786, Cl. 128-200.210.
Oshima, Shunji: *See—*
  Inui, Kanichiro; and Oshima, Shunji, 5,700,754, Cl. 502-340.000.
Oskar Frech GmbH & Co.: *See—*
  Fink, Roland, 5,699,849, Cl. 164-155.400.
Osswald, Mathias; Dorsch, Dieter; Mederski, Werner; Wilm, Claudia; Schmitges, Claus J.; and Christadler, Maria, to Merck Patent Gesellschaft mit Beschrankter Haftung. Endothelin receptor antagonists. 5,700,807, Cl. 514-291.000.
Ostermann, Wilfried: *See—*
  Jahrsetz, Achim; Kleefeldt, Frank; Ostermann, Wilfried; and Welskopf, Fred, 5,699,685, Cl. 70-264.000.
Ostromoukhov, Victor; and Nehab, Smadar, to Canon Information Systems, Inc. Halftoning with gradient-based selection of dither matrices. 5,701,366, Cl. 382-237.000.
Ota, Masaki; Okadome, Youichi; Kobayashi, Hisakazu; and Hamasaki, Masaru, to Kabushiki Kaisha Toyoda Jidoshokki Seisakusho. Swash plate type variable displacement compressor. 5,699,716, Cl. 92-12.200.
Othmer, Konstantin; and Holland, Shannon, to Apple Computer, Inc. Resolution independent methods for rendering a graphic image on a display device. 5,701,138, Cl. 345-132.000.
Otsuka Pharmaceutical Co., Ltd.: *See—*
  Kitakaze, Masafumi, 5,700,803, Cl. 514-254.000.
Ouchi, Toshihiko; Sakata, Hajime; Ohguri, Noriaki; and Uchida, Mamoru, to Canon Kabushiki Kaisha. Compound semiconductor device and fabrication method of producing the compound semiconductor device. 5,701,325, Cl. 372-96.000.

Ouno, Taiichi. Garbage container. 5,699,929, Cl. 220-323.000.
Oury, Robert F.; Dingeldein, Mark S.; Ledger, Alan S.; and Gallione, Joseph P., to Rotec Industries. Conveyor elevating techniques. 5,699,878, Cl. 187-234.000.
Ousley, Frank Benson, II; and Keehn, Douglas Allen, Jr., to Ray Industries, Inc. Submerged marine exhaust system. 5,700,172, Cl. 440-88.000.
Outboard Marine Corporation: *See—*
  Mondek, Martin J.; and Kantola, James C., 5,700,168, Cl. 440-1.000.
Ouyang, Jiangbo; and Harpel, William L., to BetzDearborn Inc. Passivation method and composition for galvanized metal surfaces. 5,700,525, Cl. 427-416.000.
Oviatt, Jeffrey J. Extendible applicator. 5,699,574, Cl. 15-210.100.
Ow, David W.: *See—*
  McElroy, Marlene D., deceased; Helinski, Donald R.; Wood, Keith V.; De Wet, Jeffrey R.; Ow, David W.; and Howell, Stephen H., 5,700,673, Cl. 435-189.000.
Owens, Byron C., to Vesture Corporation. Heat application method. 5,700,284, Cl. 607-114.000.
Owens-Corning Fiberglas Technology, Inc.: *See—*
  Flautt, Martin C.; Adzima, Leonard J.; and Mann, Douglas B., 5,700,574, Cl. 428-392.000.
Owens, Marschall S.: *See—*
  Johnson, Oscar R., III; and Owens, Marschall S., 5,700,149, Cl. 434-322.000.
Oxford Magnet Technology Limited: *See—*
  Brown, Daniel Edward, 5,701,112, Cl. 335-216.000.
Ozaki, Masaharu: *See—*
  Ikeo, Joji; Ozaki, Masaharu; Tanaka, Tsuyoshi; Itonori, Katsuhiko; and Ishida, Yuusuke, 5,701,500, Cl. 395-779.000.
Ozaki, Masami: *See—*
  Ikeda, Atsuhiko; Ozaki, Masami; Honami, Reijiro; Yumita, Takashi; Yano, Hiroyuki; Nakano, Yuki; Kurihara, Yutaka; and Hirano, Tadayoshi, 5,700,824, Cl. 514-383.000.
Ozawa, Kazuhisa: *See—*
  Inoue, Shuji; and Ozawa, Kazuhisa, 5,699,612, Cl. 29-843.000.
Ozawa, Yoichi: *See—*
  Takeichi, Hideo; Ozawa, Yoichi; Aoki, Sei; and Shimizu, Takashi, 5,700,874, Cl. 525-288.000.
Pacesetter, Inc.: *See—*
  Silvian, Sergiu, 5,700,280, Cl. 607-5.000.
  Wong, Kenneth L., 5,701,234, Cl. 361-773.000.
Pack, Barry, to Imperial Chemical Industries PLC. Thermal transfer printing dyesheet. 5,700,756, Cl. 503-227.000.
Packinox: *See—*
  Merle, Gabriel, 5,699,856, Cl. 165-166.000.
Pagnon, Alain; and Rieuvernet, Pierre, to Imaje. Method to optimize the operation of an ink-jet printer, and a printer using such a method. 5,701,149, Cl. 347-89.000.
Pahuski, Edward E.; Dimond, Randall L.; Priest, John H.; Zandt, Lisa; Stebnitz, Kathleen K.; and Mendoza, Leopoldo G., to Promega Corporation. Methods and kits for separation, concentration and analysis of cells. 5,700,645, Cl. 435-6.000.
Paillet, Guy: *See—*
  Steimle, Andre; Louis, Didier; and Paillet, Guy, 5,701,397, Cl. 395-27.000.
Paine, Anthony J.: *See—*
  Poutes, Fatima M.; Sacripante, Guerino G.; Drappel, Stephan V.; Paine, Anthony J.; and Kovacs, Gregory J., 5,700,316, Cl. 106-31.580.
Paine, John B., III, to Philip Morris Incorporated. Use of eitelite to reduce sidestream smoke. 5,699,811, Cl. 131-365.000.
Pal, Uday B.; and Szekely, Julian, to Massachusetts Institute of Technology. Method for enhancing reaction rates in metals refining extraction, and recycling operations involving melts containing ionic species such as slags, mattes, fluxes. 5,700,308, Cl. 75-10.100.
Palifka, Robert G.: *See—*
  Moynihan, Edward R.; Gailus, David W.; Palifka, Robert G.; Hoisington, Paul A.; Hine, Nathan P.; Adams-Brady, David; Biggs, Melvin L.; McDonald, Marlene M.; Barss, Steven H.; Mackay, Diane; Paulson, Bruce A.; and Mackay, Stephen C., 5,701,148, Cl. 347-92.000.
Pallikaris, Ioannis G. Procedure for removal of soft eye tissue. 5,699,810, Cl. 128-898.000.
Palomera, Michel: *See—*
  Marchand, Jean-Louis; Palomera, Michel; Peeters, Michel; and Salomon, Jean-Paul, 5,700,384, Cl. 219-69.120.
Palti, Yoram. Drug coding and delivery system. 5,700,998, Cl. 235-375.000.
Pan, Shao Wei; and Wang, Shay-Ping Thomas, to Motorola, Inc. Method and system for compressing a speech signal using envelope modulation. 5,701,391, Cl. 395-2.210.
Pang, Roy Hoi Loi: *See—*
  Crea, Roberto; Pang, Roy Hoi Loi; Oppermann, Hermann; Keck, Peter C.; Alvarado-Urbina, Gabriel; Wu, Gay-May; and Cohen, Charles M., 5,700,677, Cl. 435-226.000.
Pankiewicz, Krzystof W.: *See—*
  Watanabe, Kyoichi A.; Pankiewicz, Krzystof W.; Goldstein, Barry M.; and Bell, J. Ellis, 5,700,786, Cl. 514-47.000.
Papadimitrakopoulos, Fotios: *See—*
  Chandross, Edwin Arthur; Galvin-Donoghue, Mary Ellen; and Papadimitrakopoulos, Fotios, 5,700,696, Cl. 437-1.000.
Paradis, Joseph R. Control of fluid flow. 5,699,821, Cl. 137-1.000.
Parham, Marc Ellous: *See—*
  Hancock, Lawrence Francis; Kishbaugh, Alan Jay; and Parham, Marc Ellous, 5,700,902, Cl. 528-373.000.
  Hancock, Lawrence Francis; Kishbaugh, Alan Jay; and Parham, Marc Ellous, 5,700,903, Cl. 528-373.000.
Parison, James A.; Froeschle, Thomas A.; and Maresca, Robert L., to Bose Corporation. Electromechanical transducing. 5,701,039, Cl. 310-12.000.
Park, Chang-won; Yang, Jun-mo; and Lee, Joon-bae, to Samsung Display Devices Co., Ltd. Mixed green-emitting phosphor and a cathode ray tube adopting the same. 5,701,054, Cl. 313-467.000.
Park, Chan-Sou, to Daewoo Electronics Co., Ltd. Different track searching method for video compact disc recording/reproducing system and apparatus thereof. 5,701,384, Cl. 386-70.000.
Park, Chun Kwan: *See—*
  Jeon, Byung Chun; Do, Mi Sun; Park, Chun Kwan; Oh, Chang Whan; and Kim, Young Sun, 5,701,300, Cl. 370-392.000.
Park, Donghoon: *See—*
  Park, Seonghyon; Kim, Jinseong; and Park, Donghoon, 5,700,223, Cl. 475-269.000.
Park, Dong-Seek: *See—*
  Moon, Yong-Ho; Kim, Jae-Ho; and Park, Dong-Seek, 5,701,369, Cl. 382-249.000.
Park, Katalina: *See—*
  Chung, Sung I.; and Park, Katalina, 5,699,928, Cl. 220-269.000.
Park, Ki Ho: *See—*
  Park, Young Jae; Park, San Il; Choi, Kyoung Bin; Ha, Young Jin; Park, Ki Ho; Ko, Chang Bog; and Kim, Jeong Gun, 5,699,852, Cl. 165-76.000.
Park, Pil-Soon: *See—*
  Jeon, Jun-Young; and Park, Pil-Soon, 5,701,072, Cl. 323-312.000.
Park, San Il: *See—*
  Park, Young Jae; Park, San Il; Choi, Kyoung Bin; Ha, Young Jin; Park, Ki Ho; Ko, Chang Bog; and Kim, Jeong Gun, 5,699,852, Cl. 165-76.000.
Park, Seonghyon; Kim, Jinseong; and Park, Donghoon, to Hyundai Motor Co. Power train of five-speed automatic transmission for vehicle. 5,700,223, Cl. 475-269.000.
Park, Soung Hwi, to LG Semicon Co., Ltd. Timer oscillation circuit with comparator clock control signal synchronized with oscillation signal. 5,701,105, Cl. 331-153.000.
Park, Tae Ho; Kim, Chun Suk; and Moon, Sung Hun, to Samsung Corning Co., Ltd. Sealing glass composition. 5,700,744, Cl. 501-15.000.
Park, Won-mo; and Lee, Jong-jin, to Samsung Electronics Co., Ltd. Method for manufacturing a capacitor for a semiconductor device. 5,700,709, Cl. 437-60.000.
Park, Young Jae; Park, San Il; Choi, Kyoung Bin; Ha, Young Jin; Park, Ki Ho; Ko, Chang Bog; and Kim, Jeong Gun, to Korea Institute of Energy Research. Heat exchanger having a resin-coated pipe. 5,699,852, Cl. 165-76.000.
Parker, Delmer G., to Xerox Corporation. Scavengeless development apparatus including an electroded donor roll having a tri-contact commutator assembly. 5,701,564, Cl. 399-285.000.
Parker, Diana L.: *See—*
  Puritch, George S.; Almond, David S.; and Parker, Diana L., 5,700,473, Cl. 424-405.000.
Parker, Fred T., to Cook Incorporated. Flexible, kink-resistant, introducer sheath and method of manufacture. 5,700,253, Cl. 604-282.000.
Parker, James C., Jr.: *See—*
  Liou, Jiunn-Yau; Wheeler, Richard L.; Sen, Bidyut; and Parker, James C., Jr., 5,701,071, Cl. 323-220.000.
Parks, Daniel Robert: *See—*
  Cook, Roger Joseph; DeVoe, Joseph Paul; Macfarlane, Kevin Douglas; Parks, Daniel Robert; and Gibson, Patrick William, 5,701,063, Cl. 318-469.000.
Pasch, Nicholas F., to LSI Logic Corporation. Process for mounting a semiconductor device to a circuit substrate. 5,700,715, Cl. 437-183.000.
Paserin, Vladimir: *See—*
  Ettel, Victor Alexander; Ambrose, John; Cushnie, Kirt Kenneth; Bell, James Alexander E.; Paserin, Vladimir; and Kalal, Peter Joseph, 5,700,363, Cl. 205-271.000.
Pasik, Gregory E.: *See—*
  Wood, Robert J.; Piloski, Michael J.; and Pasik, Gregory E., 5,701,155, Cl. 348-72.000.
Pass & Seymour, Inc.: *See—*
  Huff, Bob E., 5,700,978, Cl. 174-66.000.
Patel, Jayantilal Shamjibhai, to Bell Communications Research, Inc. Inverse twisted and super-twisted nematic liquid crystal device. 5,701,168, Cl. 349-130.000.
Patel, Mahesh V.: *See—*
  Hutchinson, Douglas K.; Barbachyn, Michael R.; Brickner, Steven J.; Gammill, Ronald B.; and Patel, Mahesh V., 5,700,799, Cl. 514-235.800.
Patel, Nalin K.; and Burroughes, Jeremy H., to Kabushiki Kaisha Toshiba. Semiconductor device and method for its manufacture. 5,701,017, Cl. 257-27.000.
Patel, Ramesh N.: *See—*
  Hanson, Ronald L.; Patel, Ramesh N.; and Szarka, Laszlo J., 5,700,669, Cl. 435-123.000.
PathoGenesis Corporation: *See—*
  Stover, Charles Kendall; and Mahairas, Gregory G., 5,700,683, Cl. 435-252.310.
Patterson, Gregory S.: *See—*

Weadon, Mark W.; and Patterson, Gregory S., 5,700,042, Cl. 292-80.000.
Patton, David Lynn: *See—*
Rosenburgh, John Howard; Piccinino, Ralph Leonard, Jr.; and Patton, David Lynn, 5,701,540, Cl. 396-565.000.
Paugh, Edward C.; Leafstone, Harley W.; and Hottick, Nicholas P., to West Coast Chain Mfg. Company. Extension member anchor. 5,699,975, Cl. 242-371.000.
Paul, Stephan R.: *See—*
Yang, Yu-Chung; Bennett, Frances K.; and Paul, Stephan R., 5,700,664, Cl. 435-69.520.
Paule, Markus: *See—*
Duvinage, Frank; Paule, Markus; Krämer, Michael; Rippert, Nils; and Enderle, Christian, 5,699,765, Cl. 123-315.000.
Paulson, Bruce A.: *See—*
Moynihan, Edward R.; Gailus, David W.; Pasfka, Robert G.; Hoisington, Paul A.; Hine, Nathan P.; Adams-Brady, David; Biggs, Melvin L.; McDonald, Marlene M.; Barss, Steven H.; Mackay, Diane; Paulson, Bruce A.; and Mackay, Stephen C., 5,701,148, Cl. 347-92.000.
Paulson, William Thomas. Braided line splices and methods of splicing to form same. 5,699,657, Cl. 57-22.000.
Pavelka, Lee A.: *See—*
Dreyer, John F., Jr.; Bradshaw, Thomas I.; Burns, David M.; Pavelka, Lee A.; and Orensteen, Bruce D., 5,700,077, Cl. 362-32.000.
Payne, John David, to Zeneca Limited. Antimicrobial treatment of textile materials. 5,700,742, Cl. 442-123.000.
Payne, LeRoy. Continuous structure forming apparatus. 5,700,345, Cl. 156-356.000.
Payton, Brian Gerrit: *See—*
Jacopi, Tom William; Payton, Brian Gerrit; and Siwek, Howard Alexander, 5,701,456, Cl. 395-604.000.
PCS Solutions, LLC: *See—*
Dolan, John M.; and Beasley, Andrew S., 5,701,579, Cl. 455-3.100.
PDT Systems, Inc.: *See—*
Narciso, Hugh L., Jr., 5,700,243, Cl. 604-102.000.
Pearce, Michael K.: *See—*
Abrams, John S.; Chretien, Isabelle; Lee, Frank D.; and Pearce, Michael K., 5,700,915, Cl. 530-413.000.
Pearl Technologies, Inc.: *See—*
Pottorff, Earl T., 5,700,489, Cl. 425-72.100.
Pedersen, Anders Hjelholt: *See—*
Jørgensen, Tony; and Pedersen, Anders Hjelholt, 5,700,914, Cl. 530-412.000.
Pedersen, Gitte: *See—*
Dambus, Ture; Kirk, Ole; Pedersen, Gitte; and Venegas, Manuel Garcia, 5,700,770, Cl. 510-305.000.
Peek, Leroy: *See—*
Chiu, Chung-Wai; Jeffcoat, Roger; Henley, Matthew; and Peek, Leroy, 5,700,917, Cl. 536-18.700.
Peeters, Michel: *See—*
Marchand, Jean-Louis; Palomera, Michel; Peeters, Michel; and Salomon, Jean-Paul, 5,700,384, Cl. 219-69.120.
Peifer, Melvin W. Flexible rotary toothbrush. 5,699,575, Cl. 15-23.000.
Peleg, Alexander D.: *See—*
Glew, Andrew F.; Mennemeier, Larry M.; Peleg, Alexander D.; Bistry, David; Mittal, Millind; Dulong, Carole; Kowashi, Eiichi; Eitan, Benny; Lin, Derrick; and Vakkalagadda, Ramamohan R., 5,701,508, Cl. 395-800.000.
Penederm, Inc.: *See—*
Quigley, John W., Jr.; and Goodman, Harris, 5,700,483, Cl. 424-486.000.
Peng, Juei-Tang. Christmas light assembly. 5,700,082, Cl. 362-226.000.
Peng, Ping-Hui: *See—*
Lee, Jian-Huei; Yen, Ying-Tzu; and Peng, Ping-Hui, 5,700,729, Cl. 438-230.000.
Pentech International Inc.: *See—*
Hadtke, Frederick B.; El-Fakir, Linda; and Rosen, Greg M., 5,699,620, Cl. 30-452.000.
Perache, Jean-Michel: *See—*
Villette, Jean De Chevron; Perache, Jean-Michel; and Lagarde, Eric, 5,699,847, Cl. 160-168.10P.
Perelman, Roberto; and Yuan, Chris, to Siemens Business Communication Systems, Inc. Partitioned point-to-point communications networks. 5,701,120, Cl. 340-825.020.
Perf Drill, Inc.: *See—*
Cousins, James E.; Markiel, George R.; and Boyter, Ruben C., 5,699,866, Cl. 175-78.000.
Perfect Pass Control Systems Incorporation: *See—*
Horton, Eric P., 5,700,171, Cl. 440-87.000.
Perkins, Clifton G., to Autozone, Inc. Alternator/starter testing device. 5,701,089, Cl. 324-772.000.
Permethyl Specialties, L.L.C.: *See—*
Hinterwaldner, Rudolph; and Weldes, Helmut H., 5,700,455, Cl. 424-70.140.
Pero, Joan Marie: *See—*
Cope, Frederick Oliver; Rausch, Linda Sue; Richards, Ernest William; Smith, Michelle Marie; Abbruzzese, Bonnie Chandler; and Pero, Joan Marie, 5,700,782, Cl. 514-21.000.
Perone, Robert N. Battery storage and dispenser apparatus. 5,700,075, Cl. 312-45.000.
Perry, Alan R.: *See—*
Jacobs, Jack H.; Thomas, Matthew M.; Grosskrueger, Duane D.; Carpenter, Bernie F.; and Perry, Alan R., 5,700,337, Cl. 156-64.000.
Perry, Mark: *See—*
Bankert, Peter J.; Perry, Mark; and Grady, Richard, 5,699,817, Cl. 134-102.200.
Perry, William; and Helmer, Kerry, to United Technologies Automotive Systems, Inc. Vehicle mirror adjustment gear train. 5,701,211, Cl. 359-873.000.
Perttunen, Cary Drake: *See—*
Harris, Daryl Robert; Jambhekar, Shrirang Nilkanth; Reber, William Louis; Stuckman, Bruce Edward; and Perttunen, Cary Drake, 5,701,258, Cl. 364-514.00R.
Pescetto, Michael J.: *See—*
Grois, Igor; Makhlin, Ilya; Bunin, Grigoriy; and Pescetto, Michael J., 5,701,382, Cl. 385-140.000.
Pesenti, Enrico: *See—*
Mongelli, Nicola; Crugnola, Angelo; Lombardi Borgia, Andrea; and Pesenti, Enrico, 5,700,788, Cl. 514-91.000.
Petefish, William George: *See—*
Fischer, Paul James; and Petefish, William George, 5,701,032, Cl. 257-692.000.
Petermeier, Norman B.: *See—*
Kelly, Bryan M.; Petermeier, Norman B.; Kelly, Matthew F.; and Oltmann, J. Richard, 5,700,007, Cl. 273-118.00A.
Petrole, Anthony P.; and Rivera, José B., to Bulk Chemicals, Inc. Method for treating metal surfaces using a silicate solution and a silane solution. 5,700,523, Cl. 427-397.800.
Petruccello, John P.; and Reasoner, Michael, to Teleflex Incorporated. Slotted swivel tube. 5,699,697, Cl. 74-502.600.
Petruzzi, Thomas G. Interlocking stackable container storage system. 5,699,925, Cl. 220-4.270.
Petterborg, Emil M. Collapsible bedspread holder. 5,699,565, Cl. 5-504.100.
Peyser, Mark S.; Cuny, Douglas J.; Strauss, Douglas W.; Reed, Scott W.; Rethy, Csaba L.; and Aranyi, Ernie, to United States Surgical Corporation. Surgical clip applier. 5,700,270, Cl. 606-142.000.
Pfleiderer, Wolfgang: *See—*
Suhadolnik, Robert J.; and Pfleiderer, Wolfgang, 5,700,785, Cl. 514-44.000.
Pham, Hoang T.; Strait, Chad A.; and Kirk, Richard O., to Dow Chemical Company, The. Single screw method and apparatus. 5,700,885, Cl. 525-534.000.
Pharmacia & Upjohn Company: *See—*
Hutchinson, Douglas K.; Barbachyn, Michael R.; Brickner, Steven J.; Gammill, Ronald B.; and Patel, Mahesh V., 5,700,799, Cl. 514-235.800.
Pharmacia & Upjohn S.p.A.: *See—*
Mongelli, Nicola; Crugnola, Angelo; Lombardi Borgia, Andrea; and Pesenti, Enrico, 5,700,788, Cl. 514-91.000.
Pharney, Julian Robert; and Spitz, William Tracy, to Lucent Technologies. Connector cross-talk compensation. 5,700,167, Cl. 439-676.000.
Phelps, Patricia V.; and Bryan, Thomas E., to Embrex, Inc. Method and apparatus for in ovo injection. 5,699,751, Cl. 119-6.800.
Philip Morris Incorporated: *See—*
Paine, John B., III, 5,699,811, Cl. 131-365.000.
Philipp, Guenther: *See—*
Materne, Kurt André; Philipp, Guenther; and Muelle, Wilhelm, 5,699,895, Cl. 198-731.000.
Philips Electronic North America Corporation: *See—*
Shipe, Gary, 5,700,724, Cl. 437-215.000.
Philips Electronics North America Corporation: *See—*
Chi, Chi-Hung, 5,701,435, Cl. 395-486.000.
Phillion, Dennis Paul; Ruminski, Peter Gerrard; and Yalamanchili, Gopichand, to Monsanto Company. Fluoroalkenyl compounds and their use as pest control agents. 5,700,840, Cl. 514-628.000.
Phillip, Günther, to Maschinenfabrik Niehoff GmbH & Co. KG. Process and device for regulating the calorific output in a continuous annealing and processing line for continuously cast metal products. 5,700,335, Cl. 148-508.000.
Phillips, Earl Kay: *See—*
Shiau, David Wen-I; Detlefsen, William David; and Phillips, Earl Kay, 5,700,587, Cl. 428-528.000.
Phillips, George E.; Jaszewski, Wayne M.; Griffiths, John M.; and Gessner, Keith W., to Brunswick Corporation. Air intake system for a marine engine. 5,699,763, Cl. 123-184.210.
Piacente, Robert A.; Madulka, Karol Anne Liu; and Kenna, John M., to United States of America, Army. Ammunition propellant temperature measuring assembly. 5,700,088, Cl. 374-141.000.
Picard, Antoine, to Lohr Industrie. Vehicle formed from a series of modules interconnected by a composite articulated connection. 5,700,023, Cl. 280-426.000.
Piccinino, Ralph Leonard, Jr.: *See—*
Rosenburgh, John Howard; Piccinino, Ralph Leonard, Jr.; and Patton, David Lynn, 5,701,540, Cl. 396-565.000.
Piccolo, Oreste: *See—*
De Ferra, Lorenzo; Massardo, Pietro; Piccolo, Oreste; and Servi, Stefano, 5,700,668, Cl. 435-106.000.
Pichardo, Francisco Antonio: *See—*
Deckner, George Endel; Pichardo, Francisco Antonio; Alban, Noelle Carolyn; and Sills, Marsha Carolyn, 5,700,452, Cl. 424-59.000.
Piciaccia, Stefano: *See—*
Meli, Fausto; and Piciaccia, Stefano, 5,701,194, Cl. 359-341.000.

Pickett, Gordon E.: *See—*
Hughes, Kenneth E.; Masterson, David C.; Fink, David J.; Metz, Barbara A.; Pickett, Gordon E.; Gemmer, Paul M.; and Brody, Richard S., 5,700,353, Cl. 162-143.000.
Virnelson, Kevin M.; Hughes, Kenneth E.; Masterson, David C.; Fink, David J.; Metz, Barbara A.; Pickett, Gordon E.; Gemmer, Paul M.; and Brody, Richard S., 5,700,354, Cl. 162-143.000.
Pickett, Walter C.: *See—*
Tao, Weng; Corbett, Martin John; and Pickett, Walter C., 5,700,465, Cl. 424-130.100.
Picowder Institute for Medical Research, The: *See—*
Bucala, Richard J.; Vlassara, Helen; Cerami, Anthony; and Tracey, Kevin J., 5,700,447, Cl. 424-9.100.
Pieper, Helmut; Austel, Volkhard; Himmelsbach, Frank; Linz, Günter; Guth, Brian; and Weisenberger, Johannes, to Karl Thomae, GmbH. Piperazine derivatives, pharmaceutical compositions containing these compounds, their use and processes for preparing them. 5,700,801, Cl. 514-252.000.
Pierce, James A. Apparatus for observing the dispersion pattern of the spray plume of a spray nozzle. 5,701,156, Cl. 348-86.000.
Pierce, James Michael: *See—*
Prieto, Pedro Antonio; Smith, David Fletcher; Cummings, Richard Dale; Kopchick, John Joseph; Mukerji, Pradip; Moremen, Kelley Wilson; and Pierce, James Michael, 5,700,671, Cl. 435-172.300.
Pierschbacher, Michael D.; Ruoslahti, Erkki I.; and Dedhar, Shoukat, to La Jolla Cancer Research Foundation. Selection of cells having increased cell adhesion properties. 5,700,681, Cl. 435-240.210.
Pierson, Mark W.: *See—*
Croteau, Andrew J.; Pierson, Mark W.; Townsend, David E.; and Naqui, Ali, 5,700,655, Cl. 435-30.000.
Pig Research Institute, Taiwan: *See—*
Liu, Si-kwang, 5,700,656, Cl. 435-40.520.
Pike, William C.: *See—*
Hahnfeld, Jerry L.; Bee, Timothy G.; Kirkpatrick, Donald E.; Tung, Lu Ho; and Pike, William C., 5,700,887, Cl. 526-182.000.
Pikkarainen, Juha; and Kontas, Veijo, to Nokia Mobile Phones Ltd. Method and modulator for modulating digital signal to higher frequency analog signal. 5,701,106, Cl. 332-100.000.
Pilkington Glass Limited: *See—*
Lowe, Martin; and Jenkinson, Timothy, 5,700,305, Cl. 65-60.100.
Piloski, Michael J.: *See—*
Wood, Robert J.; Piloski, Michael J.; and Pasik, Gregory E., 5,701,155, Cl. 348-72.000.
Pilot Ink Co., Ltd., The: *See—*
Shibazaki, Masaki; Ido, Mikiya; and Watanabe, Tohru, 5,700,534, Cl. 428-36.920.
Pinault, Fabrice, to Societe Industrielle et Commerciale de Materiel Aeronautique. Energy-absorbing link member and an aircraft seat fitted with such a member. 5,699,984, Cl. 244-122.00R.
Pinchuk, Leonard; and Clair, Kevin J., to Corvita Corporation. Endoluminal prosthesis deployment device for use with prostheses of variable length and having retraction ability. 5,700,269, Cl. 606-108.000.
Pineda, Juan, to Hyundai Electronics America. Inverse discrete cosine transform processor for VLSI implementation. 5,701,263, Cl. 364-725.000.
Pinkney, Michael: *See—*
Kehoe, Michael; and Pinkney, Michael, 5,700,648, Cl. 435-7.100.
Pinto, Angelo, to Pinto, Angelo. Method of treating urinary incontinence. 5,700,783, Cl. 514-21.000.
Pioneer Electronic Corporation: *See—*
Nagayama, Kenichi; and Miyaguchi, Satoshi, 5,701,055, Cl. 313-504.000.
Pirchl, Gerhard. Metal part with covering and method of its manufacture. 5,700,542, Cl. 428-68.000.
Pirelli Cavi S.p.A.: *See—*
Meli, Fausto; and Piciaccia, Stefano, 5,701,194, Cl. 359-341.000.
Pirelli General plc: *See—*
Tarbox, Eleanor Joan, 5,701,378, Cl. 385-126.000.
Pitney Bowes Inc.: *See—*
Bellemare, Richard A.; and Keplinger, Edward G., 5,701,183, Cl. 358-404.000.
Berson, William, 5,701,249, Cl. 364-464.180.
Wilson, Michael, 5,701,250, Cl. 364-464.130.
Pitot, Christian; and Michel, Martinez, to Sextant Avionique. Method and device for protecting the execution of linear sequences of commands performed by a processor. 5,701,315, Cl. 371-51.100.
Pitre, John: *See—*
Deir, Thomas; and Pitre, John, 5,700,858, Cl. 524-297.000.
Pitris, Costas: *See—*
Richards-Kortum, Rebecca; Pitris, Costas; and Mitchell, Michele Follen, 5,699,795, Cl. 128-634.000.
Pittman, John M. Firearm security device. 5,699,687, Cl. 70-376.000.
Plakosh, David, to Xerox Corporation. System for positioning an image in a digital printer. 5,701,151, Cl. 347-247.000.
Plamondon, Thomas J.: *See—*
Mills, Shannon E.; Shaffer, Randy; Freeman, Michael T.; Plamondon, Thomas J.; and Oakes, Barry L., Jr., 5,700,147, Cl. 433-98.000.
Plastic Advanced Recycling Corp.: *See—*
Yang, Yali, 5,700,751, Cl. 502-255.000.
Platner, Brian Page; and Mudge, Philip Howland, to Platner, Brian Page. Occupancy detector. 5,701,117, Cl. 340-567.000.
PLC Medical Systems, Inc.: *See—*
Negus, Charles Christopher; and Linhares, Stephen J., 5,700,259, Cl. 606-14.000.
Plona, Daniel Georges: *See—*
Bainachi, Daniel Olivier; Dusserre-Telmon, Guy Franck Paul; and Plona, Daniel Georges, 5,700,011, Cl. 277-65.000.
Plummer, Leonard M.; Leyva, Bartolo L.; and Rentzel, Richard T., to Baker Hughes Incorporated. Two-piece lead seal pothead connector. 5,700,161, Cl. 439-587.000.
PMC Specialties Group Inc.: *See—*
Preiser, Marvin F.; and Vogt, Peter F., 5,700,474, Cl. 424-405.000.
Poborsky, Gary A.: *See—*
Lamm, Richard M.; and Lefebvre, Ronald, 5,700,112, Cl. 406-93.000.
Podobnik, Ivan Zlatko: *See—*
Chung, Bin; Mackay, Bruce E.; and Podobnik, Ivan Zlatko, 5,700,845, Cl. 521-99.000.
Pohang Iron & Steel Co., Ltd.: *See—*
Woo, Soon Hyung; Chung, Sung Kee; Ban, Soo Ho; Kim, Byoung Eog; and Kim, Si Hwan, 5,700,817, Cl. 514-340.000.
Poirier, Blair J. Well water recirculation valve and method of manufacturing thereof. 5,699,859, Cl. 166-112.000.
Polar Materials, Incorporated: *See—*
Babacz, Robert J.; Narendranath, Kadthala R.; Frake, Kevin; and Baylog, Melissa A., 5,700,327, Cl. 134-1.100.
Polaroid Corporation: *See—*
Caterino, Garret J.; Hopkins, Patrick W.; and Strizhak, Elliott S., 5,701,525, Cl. 396-132.000.
Reiss, Wanda T.; and Ionson, James A., 5,701,185, Cl. 358-471.000.
Pollard, Ricky Alan: *See—*
Joseph, Gary Curtis; Berg, Charles John, Jr.; and Pollard, Ricky Alan, 5,699,911, Cl. 206-494.000.
Pollart, Daniel Joseph: *See—*
Monforte, Joseph Albert; Becker, Christopher Hank; Shaler, Thomas Andrew; and Pollart, Daniel Joseph, 5,700,642, Cl. 435-6.000.
Poltielov, Neris. System for preparing baked apples and other edible fruits and vegetables. 5,699,725, Cl. 99-494.000.
Polygram International Holding B.V.: *See—*
Wilhelm, Henning, 5,700,500, Cl. 425-572.000.
Polygram International Holdings B.V.: *See—*
Ahrens, Harald; Tiebel, Rainer; and Zielle, Rainer, 5,699,742, Cl. 101-486.000.
Pontes, Fatima M.; Sacripante, Guerino G.; Drappel, Stephan V.; Paine, Anthony J.; and Kovacs, Gregory J., to Xerox Corporation. Acoustic ink compositions. 5,700,316, Cl. 106-31.580.
Pope, Michael: *See—*
Anderson, Mark Stephen; Yesberg, John Desborough; Pope, Michael; Nayda, Lisa; Hayman, Ken; and Beahan, Brendan, 5,701,342, Cl. 380-4.000.
Popovich, Steven R., to Digisonix, Inc. Active acoustic control in remote regions. 5,701,350, Cl. 381-71.000.
Portig, Harald; Schoedinger, Kevin Dean; Seman, Richard Andrew, Jr.; and Wright, Phillip Byron, to Lexmark International, Inc. Image forming apparatus with modular staging assembly. 5,701,549, Cl. 399-36.000.
Portola Packaging, Inc.: *See—*
Mascio, Nicholas A.; and Martin, Douglas S., 5,699,924, Cl. 215-252.000.
Potter, Michael D., to Advanced Vision Technologies, Inc. Method of gettering and sealing an evacuated chamber of a substrate. 5,700,176, Cl. 445-25.000.
Pottorff, Earl T., to Pearl Technologies, Inc. Bubble stabilizer and sizing cage with wear strips. 5,700,489, Cl. 425-72.100.
Potut, Christian, to C.S.P. Diffusion, société anonyme. Curved toothed hairclip. 5,699,814, Cl. 132-277.000.
Poulsen, Peder Ulrik. Current sensing relay. 5,701,109, Cl. 335-78.000.
Power, Scott Douglas: *See—*
Bott, Richard Ray; Caldwell, Robert Mark; Cunningham, Brian C.; Estell, David Aaron; Power, Scott Douglas; and Wells, James Allen, 5,700,676, Cl. 435-221.000.
Powers, John; Shelton, Teriy; and Gonseth, Michael, to Western Litho Plate & Supply Co. System for automatically exposing and labeling a plurality of lithographic plates. 5,701,170, Cl. 355-40.000.
Prabhakar, Chebiyyam: *See—*
Vyas, Krishnamurthi; Prabhakar, Chebiyyam; Rao, Sreenivas Dharmaraja; Sarma, Mamillapalli Ramabadhra; Reddy, Om Gaddam; Ramanujam, Rajagopalan; and Chakrabarti, Ranjan, 5,700,820, Cl. 514-369.000.
Praxair S.T. Technology, Inc.: *See—*
Gao, Yang, 5,700,423, Cl. 266-103.000.
Praxair Technology, Inc.: *See—*
Billingham, John Fredric; and Lockett, Michael James, 5,700,403, Cl. 261-112.200.
Lockett, Michael James; and Srinivasan, Vijayaraghavan, 5,699,671, Cl. 62-643.000.
Pray, David Allan: *See—*
Logan, Jeffrey Allen; Hattery, John Clifford, Jr.; Sparkman, John Paul; and Pray, David Allan, 5,700,028, Cl. 280-728.200.
Precision Detectors, Inc.: *See—*
Dion, Robert E.; and Ford, Norman C., Jr., 5,701,176, Cl. 356-338.000.
Precision Power: *See—*
Guenther, Edward W.; and Leigh, Stephen, 5,701,359, Cl. 381-203.000.
Preiser, Marvin F.; and Vogt, Peter F., to PMC Specialties Group Inc. Bird aversion compositions. 5,700,474, Cl. 424-405.000.

Price, Timothy W.: *See—*
Williams, Mark C.; and Price, Timothy W., 5,701,161, Cl. 348-468.000.
Priest, John H.: *See—*
Pahuski, Edward E.; Dimond, Randall L.; Priest, John H.; Zandt, Lisa; Stebnitz, Kathleen K.; and Mendoza, Leopoldo G., 5,700,645, Cl. 435-6.000.
Prieto, Pedro Antonio; Smith, David Fletcher; Cummings, Richard Dale; Kopchick, John Joseph; Mukerji, Pradip; Moremen, Kelley Wilson; and Pierce, James Michael, to Abbott Laboratories. Methods of making transgenic animals producing oligosaccharides and glycoproteins. 5,700,671, Cl. 435-172.300.
Princet, Joël: *See—*
Berge, Gilles; Eustache, Jean-Pierre; Princet, Joël; and Bouy, Gilbert, 5,699,582, Cl. 15-250.340.
Procter & Gamble Company, The: *See—*
Chapman, Benjamin Edgar; and Creedon, Michael Timothy, 5,700,386, Cl. 252-8.620.
Curro, John Joseph; Wolf, Scot G.; and King, Willie, 5,700,255, Cl. 604-383.200.
Deckner, George Endel; Pichardo, Francisco Antonio; Alban, Noelle Carolyn; and Sills, Marsha Carolyn, 5,700,452, Cl. 424-59.000.
Hardy, Frederick Edward; and Murch, Bruce Prentiss, 5,700,771, Cl. 510-315.000.
Joseph, Gary Curtis; Berg, Charles John, Jr.; and Pollard, Ricky Alan, 5,699,911, Cl. 206-494.000.
Stahley, Robert E., 5,699,935, Cl. 222-94.000.
Vinson, Kenneth Douglas; and Deason, Howard Thomas, 5,700,352, Cl. 162-111.000.
Yue, Jiang; Dew, Lisa Renee; and Bissett, Donald Lynn, 5,700,451, Cl. 424-59.000.
Progressive Technology in Lighting, Inc.: *See—*
Geary, Brian P., 5,700,154, Cl. 439-236.000.
Prohaska, Hans: *See—*
Hehl, Thomas; and Prohaska, Hans, 5,700,104, Cl. 403-265.000.
Promega Corporation: *See—*
Pahuski, Edward E.; Dimond, Randall L.; Priest, John H.; Zandt, Lisa; Stebnitz, Kathleen K.; and Mendoza, Leopoldo G., 5,700,645, Cl. 435-6.000.
Prough, J. Robert, to Ahlstrom Machinery Inc. Chip feeding for a continuous digester. 5,700,355, Cl. 162-246.000.
Proxima Corporation: *See—*
Minich, Arthur P.; Kappel, David W.; Harris, David E.; and Assa, Shlomo, 5,700,076, Cl. 353-31.000.
Pruehsner, Darrell L.: *See—*
Gearhardt, Kevin J.; and Pruehsner, Darrell L., 5,701,309, Cl. 371-25.100.
Puchinger, Franz; Rossman, Axel; Sikorski, Siegfried; and Wydra, Gerhard, to MTU Motoren-Und Turbinen-Union München GmbH. Carbon fiber-reinforced composite material with a layer which provides protection against erosion. 5,700,743, Cl. 442-243.000.
Puhalla, Craig J.: *See—*
Fischer, Kenneth M.; and Puhalla, Craig J., 5,700,985, Cl. 200-50.010.
Pühler, Horst: *See—*
Müller, Michael; Benz, Volker; Numrich, Uwe; Pühler, Horst; and Wopker, Wilhelm, 5,700,566, Cl. 428-332.000.
Puma Technology, Inc.: *See—*
Crozier, Keith, 5,701,423, Cl. 395-335.000.
Pun, Sherman S., to Sun Microsystems, Inc. Data acess implementation of device driver interface. 5,701,483, Cl. 395-681.000.
Pungor, Andras: *See—*
Hlady, Vladimir; Pungor, Andras; and Stroup, Eric W., 5,700,953, Cl. 73-105.000.
Purdham, David M., to Unisys Corporation. Method and apparatus for removing soft errors from a memory. 5,701,313, Cl. 371-40.200.
Purdue Research Foundation: *See—*
Kahr, Bart; Jang, Sei-Hum; and Elliott, Daniel S., 5,701,323, Cl. 372-54.000.
Purdy Neat Things Co., Inc.: *See—*
Latshaw, Ricky J., 5,699,886, Cl. 190-108.000.
Puritch, George S.; Almond, David S.; and Parker, Diana L., to W. Neudorff GmbH KG. Triglyceride enhanced pyrethrin-based arthropodicidal composition. 5,700,473, Cl. 424-405.000.
Purushothaman, Sampath: *See—*
Angelopoulos, Marie; Brusic, Vlasta A.; Graham, Teresita Ordonez; Purushothaman, Sampath; Saraf, Ravi F.; Shaw, Jane Margaret; Roldan, Judith Marie; and Viehbeck, Alfred, 5,700,398, Cl. 252-500.000.
Pylkkanen, Matti; and Thornquist, Lennart, to Andritz-Pantentverwaltungs-Gesellschaft m.b.H. Method and apparatus for removing bark balls from a log flow. 5,699,919, Cl. 209-518.000.
Qian, Jianzhong: *See—*
Xu, Beilei; and Qian, Jianzhong, 5,699,799, Cl. 128-653.100.
Quanta Computer Inc.: *See—*
Liang, Andrew; Cheng, Lilian; and Chen, Gwo Chyuan, 5,701,230, Cl. 361-681.000.
Quebedeaux, Deborah A.: *See—*
Magin, Ralph W.; Sauer, Joe D.; and Quebedeaux, Deborah A., 5,700,760, Cl. 504-206.000.
Quick, Richard L.: *See—*
Gordon, Norman S.; Cooper, Robert P.; and Quick, Richard L., 5,700,272, Cl. 606-144.000.
QuickLogic Corporation: *See—*
Gordon, Kathryn E.; and Wong, Richard J., 5,701,027, Cl. 257-530.000.
Quigley, John W., Jr.; and Goodman, Harris, to Penederm, Inc. Retinoic acid-containing compositions. 5,700,483, Cl. 424-486.000.
R & K Incinerator, Inc.: *See—*
Kaehr, Mark A., 5,699,745, Cl. 110-194.000.
Raburn, Richard W.: *See—*
Wilkinson, John W.; and Raburn, Richard W., 5,699,570, Cl. 5-713.000.
Radio Frequency Systems, Inc.: *See—*
Meredith, Sheldon Kent; and Steele, Walter Brian, 5,701,596, Cl. 455-103.000.
Radtke, Uwe: *See—*
Kürten, Heribert; Radtke, Uwe; Taube, Wolfgang; and Vollmar, Horst, 5,699,666, Cl. 60-652.000.
Rahtz, Dieter: *See—*
Biere, Helmut; Huth, Andreas; Rahtz, Dieter; Schmiechen, Ralph; Seidelmann, Dieter; Kehr, Wolfgang; Schneider, Herbert Hans; Engelstoft, Mogens; Hansen, Bondo John; Waetjen, Frank; and Honoré , Tage, 5,700,808, Cl. 514-292.000.
Rainer, Brian Keith: *See—*
Harbin, Steven Anthony; and Rainer, Brian Keith, 5,701,583, Cl. 455-25.000.
Rainin Instrument Co., Inc.: *See—*
Homberg, William D., 5,700,959, Cl. 73-864.160.
Rakhit, Sumanas: *See—*
Fu, Jian-Min; and Rakhit, Sumanas, 5,700,445, Cl. 424-1.810.
Rakhovsky, Vadim Izrailovich: *See—*
Gerasimov, Jury Vasilievich; Grinberg, Jury Moiseevich; Djuzhev, Georgy Andreevich; Kallistov, Anatoly Anatolievich; Kurilenko, Vladimir Iliich; and Rakhovsky, Vadim Izrailovich, 5,701,057, Cl. 315-111.210.
Ramanujam, Rajagopalan: *See—*
Vyas, Krishnamurthi; Prabhakar, Chebiyyam; Rao, Sreenivas Dharmaraja; Sarma, Mamillapalli Ramabadhra; Reddy, Om Gaddam; Ramanujam, Rajagopalan; and Chakrabarti, Ranjan, 5,700,820, Cl. 514-369.000.
Ramolini, Angelo: *See—*
Zulian, Ferruccio; Ramolini, Angelo; Bagnoli, Carlo; and Lazzari, Angelo, 5,701,413, Cl. 395-200.020.
Ramsey, Christopher Paul: *See—*
Claydon, Paul Charles; and Ramsey, Christopher Paul, 5,699,932, Cl. 220-671.000.
Rankin, William Jack, to TDW Delaware, Inc. Magnetic cleaning pig. 5,699,577, Cl. 15-104.061.
Ranpak Corporation: *See—*
Hughes, Kenneth E.; Masterson, David C.; Fink, David J.; Metz, Barbara A.; Pickett, Gordon E.; Gemmer, Paul M.; and Brody, Richard S., 5,700,353, Cl. 162-143.000.
Virnelson, Kevin M.; Hughes, Kenneth E.; Masterson, David C.; Fink, David J.; Metz, Barbara A.; Pickett, Gordon E.; Gemmer, Paul M.; and Brody, Richard S., 5,700,354, Cl. 162-143.000.
Rao, G. R. Mohan, to Cirrus Logic, Inc. Circuits, systems and methods for improving row select speed in a row select memory device. 5,701,143, Cl. 345-185.000.
Rao, Sreenivas Dharmaraja: *See—*
Vyas, Krishnamurthi; Prabhakar, Chebiyyam; Rao, Sreenivas Dharmaraja; Sarma, Mamillapalli Ramabadhra; Reddy, Om Gaddam; Ramanujam, Rajagopalan; and Chakrabarti, Ranjan, 5,700,820, Cl. 514-369.000.
Rapaille, André Léon Ivon: *See—*
Gonze, Michel Henri André; Van Der Schueren, Freddy Maurits Luc; and Rapaille, André Léon Ivon, 5,700,514, Cl. 426-660.000.
Rapaport, Leon St Aubyn. Instrument used for the live troubleshooting of short circuits. 5,701,081, Cl. 324-555.000.
Rasa Industries Ltd.: *See—*
Isaji, Kazutoshi, 5,699,969, Cl. 241-24.120.
Rasch, Kenneth R.: *See—*
Gheer, Barry J.; Rasch, Kenneth R.; Tress, Tab A.; and Geyer, Richard A., 5,700,994, Cl. 219-497.000.
Ratajski, Michel Paul: *See—*
Erard, Francis Albert; and Ratajski, Michel Paul, 5,699,590, Cl. 24-71.00J.
Rath, James; Tran, William Luong-Gia; Flynn, Kathy M.; Tara, Vinai Ming; Koes, Thomas A.; and Nizzo, Vincent J., to Morton International, Inc. Method of forming a multilayer printed circuit board and product thereof. 5,700,607, Cl. 430-15.000.
Ratnik, H. Ronald; and Wang, Timothy C. Y., to Ratnik Industries, Inc. Fanless snow gun. 5,699,961, Cl. 239-14.200.
Ratnik Industries, Inc.: *See—*
Ratnik, H. Ronald; and Wang, Timothy C. Y., 5,699,961, Cl. 239-14.200.
Rattner, Manfred, to Siemens Aktiengesellschaft. Therapy apparatus having a source of acoustic waves. 5,699,804, Cl. 128-660.030.
Raupp, Karl: *See—*
Rayer, Peter; Wardecki, Norbert; and Raupp, Karl, 5,700,971, Cl. 102-334.000.
Rausch, Linda Sue: *See—*
Cope, Frederick Oliver; Rausch, Linda Sue; Richards, Ernest William; Smith, Michelle Marie; Abbruzzese, Bonnie Chandler; and Pero, Joan Marie, 5,700,782, Cl. 514-21.000.
Ray Industries, Inc.: *See—*

Ousley, Frank Benson, II; and Keehn, Douglas Allen, Jr., 5,700,172, Cl. 440-88.000.
Ray, James E.: *See—*
Fisher, Jack W.; Hatfield, Lowell D.; Hoying, Richard C.; and Ray, James E., 5,700,933, Cl. 540-364.000.
Ray, Michael; and Kennedy, Adam M., to HE Holdings, Inc. Integrated infrared microlens and gas molecule getter grating in a vacuum package. 5,701,008, Cl. 250-352.000.
Raychem Limited: *See—*
Fitch, Anthony Ronald Leslie, 5,700,528, Cl. 428-34.900.
Rayer, Peter; Wardecki, Norbert; and Raupp, Karl, to Buck Werke GmbH & Co. Rapid-release smoke hand grenade. 5,700,971, Cl. 102-334.000.
Raytheon Company: *See—*
Ring, Martin D.; Mark, Roger; Flanagan, Peter F.; Brogan, Patrick M.; and Sturges, James R., 5,701,277, Cl. 367-163.000.
Raz, Yoav, to Digital Equipment Corporation. Distributed multi-version commitment ordering protocols for guaranteeing serializability during transaction processing. 5,701,480, Cl. 395-671.000.
Razzaghi, Mahmoud. High resolution actuator. 5,701,043, Cl. 310-26.000.
Readey, Dennis W.: *See—*
Ritland, Marcus A.; Readey, Dennis W.; Kleiner, Richard N.; and Sibold, Jack D., 5,700,373, Cl. 210-323.200.
Reasoner, Michael: *See—*
Petruccello, John P.; and Reasoner, Michael, 5,699,697, Cl. 74-502.600.
Reber, William Louis: *See—*
Harris, Daryl Robert; Jambhekar, Shrirang Nilkanth; Reber, William Louis; Stuckman, Bruce Edward; and Perttunen, Cary Drake, 5,701,258, Cl. 364-514.00R.
Rebres, Robert P.: *See—*
Melito, M. Anthony; and Rebres, Robert P., 5,699,586, Cl. 15-383.000.
Recker, Robert R.: *See—*
Gutniak, Mark K.; Coolidge, Thomas R.; Recker, Robert R.; and Wagner, Fred W., 5,700,775, Cl. 514-12.000.
Reckitt & Colman Inc.: *See—*
Lu, Robert Zhong, 5,700,768, Cl. 510-214.000.
Reddy, Chitranjan N.: *See—*
Shrivastava, Ritu; and Reddy, Chitranjan N., 5,701,264, Cl. 365-149.000.
Reddy, Om Gaddam: *See—*
Vyas, Krishnamurthi; Prabhakar, Chebiyyam; Rao, Sreenivas Dharmaraja; Sarma, Mamillapalli Ramabadhra; Reddy, Om Gaddam; Ramanujam, Rajagopalan; and Chakrabarti, Ranjan, 5,700,820, Cl. 514-369.000.
Rednour, William C.: *See—*
Minick, Steven E.; Segerson, Judith A.; and Rednour, William C., 5,700,257, Cl. 604-408.000.
Reed, Geoffrey Ronald: *See—*
Laws, William Robert; and Reed, Geoffrey Ronald, 5,699,694, Cl. 72-200.000.
Reed, Scott W.: *See—*
Peyser, Mark S.; Cuny, Douglas J.; Strauss, Douglas W.; Reed, Scott W.; Rethy, Csaba L.; and Aranyi, Ernie, 5,700,270, Cl. 606-142.000.
Reese, George D.; Rich, Albert R., Jr.; and Brunson, Kevin K., to Tecnol Medical Products, Inc. Face mask with enhanced facial seal. 5,699,792, Cl. 128-206.190.
Reeves Brothers, Inc.: *See—*
Castelli, Francesco; and Invernizzi, Gianpiero, 5,700,343, Cl. 156-295.000.
Reeves, John H.: *See—*
Counsell, John M.; and Reeves, John H., 5,700,993, Cl. 219-483.000.
Regan, Michael T.; and Alexandrovich, Peter S., to Eastman Kodak Company. Method for forming overlapping toner images. 5,700,611, Cl. 430-45.000.
Reibl, Michael, to Eastman Kodak Company. Camera with movable optical albada viewfinder. 5,701,535, Cl. 396-373.000.
Reichek, Joshua A. S.; and Stackenfeld, Avi J., to Legal Video Services, Inc. Method and system using time information in textual representations of speech for correlation to a second representation of that speech. 5,701,153, Cl. 348-15.000.
Reichelt, Helmut: *See—*
Sens, Rüdiger; Reichelt, Helmut; and Saling, Peter, 5,700,757, Cl. 503-227.000.
Reifschneider, Walter: *See—*
Van Heertum, John C.; Kleschick, William A.; Arndt, Kim E.; Costales, Mark J.; Ehr, Robert J.; Bradley, Kimberly Brubaker; Reifschneider, Walter; Benkö ., Zoltan; Ash, Mary Lynne; and Jachetta, John J., 5,700,940, Cl. 546-119.000.
Reigler, John Norris: *See—*
Howlett, Gordon Phillip; and Reigler, John Norris, 5,701,345, Cl. 381-13.000.
Reilly Industries, Inc.: *See—*
McAteer, Colin H.; Davis, Robert D., Sr.; and Calvin, Joel R., 5,700,942, Cl. 546-181.000.
Reinert, Gerhard: *See—*
Fuso, Francesco; and Reinert, Gerhard, 5,700,295, Cl. 8-189.000.
Reinholtz, Charles F.: *See—*
Canfield, Stephen L.; Reinholtz, Charles F.; Salerno, Robert J.; and Ganino, Anthony J., 5,699,695, Cl. 74-490.060.
Reiser, Carl, to International Fuel Cells Corp. Ion exchange membrane fuel cell power plant with water management pressure differentials. 5,700,595, Cl. 429-13.000.
Reiss, Wanda T.; and Ionson, James A., to Polaroid Corporation. Spatial light modulator assembly for adapting a photographic printer to print electronic images. 5,701,185, Cl. 358-471.000.
Remillard, Jeffrey Thomas: *See—*
Fohl, Timothy; Marinelli, Michael Anthony; and Remillard, Jeffrey Thomas, 5,700,078, Cl. 362-32.000.
Rentzel, Richard T.: *See—*
Plummer, Leonard M.; Leyva, Bartolo L.; and Rentzel, Richard T., 5,700,161, Cl. 439-587.000.
Renzo, Bernard; Robinault, Michel; and Urbain, Didier, to Draftex Industries Limited. Molding apparatus. 5,700,498, Cl. 425-532.000.
Research Corporation Technologies, Inc.: *See—*
Schwartz, Arthur G.; and Lewbart, Marvin Louis, 5,700,793, Cl. 514-177.000.
Research Developement Corporation of Japan: *See—*
Watanabe, Yasuyoshi; Suzuki, Masaaki; Hazato, Atsuo; and Langström, Bengt, 5,700,833, Cl. 514-510.000.
Research Development Corporation of Japan: *See—*
Izunome, Koji; Kawanishi, Souroku; Togawa, Shinji; Ikari, Atsushi; Sasaki, Hitoshi; and Kimura, Shigeyuki, 5,700,320, Cl. 117-19.000.
Research Foundation of State University of New York: *See—*
Sridhar, Ramalingam; and Zhang, Xuguang, 5,701,094, Cl. 326-113.000.
Research Institute of Industrial Science & Technology: *See—*
Woo, Soon Hyung; Chung, Sung Kee; Ban, Soo Ho; Kim, Byoung Eog; and Kim, Si Hwan, 5,700,817, Cl. 514-340.000.
Restorative Care of America Incorporated: *See—*
Hess, Clarence E., 5,700,237, Cl. 602-27.000.
Rethy, Csaba L.: *See—*
Peyser, Mark S.; Cuny, Douglas J.; Strauss, Douglas W.; Reed, Scott W.; Rethy, Csaba L.; and Aranyi, Ernie, 5,700,270, Cl. 606-142.000.
Reuge Music USA Ltd.: *See—*
Koelemeijer, Alexandra; Knuchel, Bernard; Letoublon, Laurent; and Olgiati, Stéphane, 5,700,963, Cl. 84-95.100.
Rex Industries Co., Ltd.: *See—*
Maruyama, Masaaki, 5,699,691, Cl. 72-104.000.
Rey, Claude. Foam generating device for fire-fighting helicopter. 5,699,862, Cl. 169-53.000.
Reynolds, Daniel S.: *See—*
Berwanger, Fred William; and Reynolds, Daniel S., 5,699,881, Cl. 188-71.500.
Reynvaan, Conrad: *See—*
Kammerer, Eric; Biering, Lothar; Grohs, Erhard; Groht, Klaus; Reynvaan, Conrad; Siegmund, Horst; Spangenberg, Jorgen; and Uecker, Arwed, 5,701,046, Cl. 310-251.000.
Rheem Manufacturing Co.: *See—*
Ross, David O.; Southerland, Dale A.; and Gantt, Timothy D., 5,699,756, Cl. 122-17.000.
Rheinische Kalksteinwerke GmbH: *See—*
Kienow, Ekkehard; Morun, Bernd; Schwertmann, Thomas; and Hoberg, Heinz, 5,700,441, Cl. 423-244.070.
Rhodehamel, Michael W.: *See—*
Singh, Gurbir; Wang, Wen-Hann; Rhodehamel, Michael W.; Bauer, John M.; and Sarangdhar, Nitin V., 5,701,503, Cl. 395-800.000.
Rhomed Incorporated: *See—*
Zamora, Paul O.; and Freer, Richard J., 5,700,444, Cl. 424-1.690.
Rhone-Poulenc Chimie: *See—*
Boittiaux, Patrick; Couvret, Virginie; and Joubert, Daniel, 5,700,294, Cl. 8-137.000.
Rhone-Poulenc Inc.: *See—*
Bender, Fredric G.; Mostoller, Charles; and Frankovich, Evelyn Marie, 5,700,507, Cl. 426-332.000.
Davidson, Thomas Charles; and Werner, Georgina M., 5,700,460, Cl. 424-64.000.
Riabkov, Vitalij Makrovich: *See—*
Steblianko, Valerij Leontievich; and Riabkov, Vitalij Makrovich, 5,700,366, Cl. 205-87.000.
Rice, Robert L.: *See—*
Lazo, John S.; Rice, Robert L.; Cunningham, April; and Wipf, Peter, 5,700,821, Cl. 514-374.000.
Rich, Albert R., Jr.: *See—*
Reese, George D.; Rich, Albert R., Jr.; and Brunson, Kevin K., 5,699,792, Cl. 128-206.190.
Richard, Gary: *See—*
Chisholm, Thomas J.; Richard, Gary; and Rysin, Alexander, 5,701,003, Cl. 250-205.000.
Richards, Ernest William: *See—*
Cope, Frederick Oliver; Rausch, Linda Sue; Richards, Ernest William; Smith, Michelle Marie; Abbruzzese, Bonnie Chandler; and Pero, Joan Marie, 5,700,782, Cl. 514-21.000.
Richards, John William; and Dorricott, Martin Rex, to Sony Corporation; and Sony United Kingdom Limited. Video processing method and apparatus. 5,701,163, Cl. 348-578.000.
Richards-Kortum, Rebecca; Pitris, Costas; and Mitchell, Michele Follen, to Board of Regents, The University of Texas System. Optical probe for the detection of cervical neoplasia using fluorescence spectroscopy and apparatus incorporating same. 5,699,795, Cl. 128-634.000.
Richardson, Paul: *See—*
Zon, Leonard; and Richardson, Paul, 5,700,927, Cl. 536-23.500.
Richardson, Rebecca Kimbrell, to Cellstar, Ltd. Unitized package assembly. 5,699,913, Cl. 206-470.000.
Riches, Thomas P.: *See—*

Stanford, Thomas H.; Sahne, Farhad Noroozi; Riches, Thomas P.; and O'Neill, Robert, 5,701,356, Cl. 381-187.000.
Ricoh Company, Ltd.: *See—*
Bisaiji, Takashi; Yu, Hideo; Kawaishi, Yasunori; Motohashi, Toshiaki; Takahashi, Mitsuru; and Kamiyama, Hideki, 5,701,566, Cl. 399-302.000.
Hanyuh, Yoshiaki, 5,701,363, Cl. 382-174.000.
Kawahara, Megumi; Yamada, Ikuko; Shoshi, Masayuki; and Kojima, Akio, 5,700,614, Cl. 430-59.000.
Kutami, Atsushi; Kawamura, Eiichi; and Kubo, Keishi, 5,700,746, Cl. 301-201.000.
Motoyama, Tetsuro, 5,701,184, Cl. 358-450.000.
Okada, Yasushi, 5,701,290, Cl. 369-263.000.
Yamauchi, Satoshi; Tamura, Hiroshi; Kataoka, Takashi; Tsumura, Naoki; Hikichi, Naoto; Narumi, Chihiro; Ezaki, Takashi; Kudo, Shozo; and Ooguro, Yoshihisa, 5,701,497, Cl. 395-753.000.
Ricoh Corporation: *See—*
Motoyama, Tetsuro, 5,701,184, Cl. 358-450.000.
Rider, Christopher Barrie: *See—*
Fyson, John Richard; Rider, Christopher Barrie; Coldrick, Philip; and Menton, Janet Linda, 5,701,545, Cl. 396-626.000.
Ridgill, Mark Peter: *See—*
Leeson, Paul David; Smith, Adrian Leonard; Ridgill, Mark Peter; Baker, Raymond; Curtis, Neil Roy; and Kulagowski, Janusz Jozef, 5,700,809, Cl. 514-300.000.
Riecke, Edgar E.: *See—*
Grace, Jeremy; Gerenser, Louis J.; Chen, Janglin; and Riecke, Edgar E., 5,700,577, Cl. 422-420.000.
Riedlinger, Heinz, to KNF Neuberger GmbH. Diaphragm pump with shaped diaphragm having radially and circumferentially extending ribs. 5,699,717, Cl. 92-98.000.
Rieger, James L., deceased (by Kent N. Birch, executor): *See—*
Weinhardt, Robert; Lindfors, Allen J.; Rieger, James L., deceased, 5,701,101, Cl. 327-561.000.
Rieker, Gerd, to Sonoco Products Company, Inc. Filter sleeve for tubular filter core. 5,699,683, Cl. 68-198.000.
Rieter Elitex a.s.: *See—*
Špindler, Zdeněk; Novotný , Vojtěch; and Sennrád, Petr, 5,699,971, Cl. 242-35.60E.
Rieuvernet, Pierre: *See—*
Pagnon, Alain; and Rieuvernet, Pierre, 5,701,149, Cl. 347-89.000.
Rifkind, Richard A.: *See—*
Breslow, Ronald; Marks, Paul A.; and Rifkind, Richard A., 5,700,811, Cl. 514-314.000.
Right, Robert W.; Costa, Hilario S.; and Hewlin, John P., to General Signal Corporation. Field programmable module personalities. 5,701,115, Cl. 340-285.050.
Ring, Martin D.; Mark, Roger; Flanagan, Peter F.; Brogan, Patrick M.; and Sturges, James R., to Raytheon Company. Electro-acoustic transducers. 5,701,277, Cl. 367-163.000.
Ring, Steven Richard: *See—*
Bath, Gareth John Richard; and Ring, Steven Richard, 5,701,594, Cl. 435-78.000.
Rioux, Marc, to National Research Council of Canada. Method and apparatus for reducing the unwanted effects of noise present in a three dimensional color imaging system. 5,701,173, Cl. 356-73.000.
Ripley, David A.: *See—*
Ripley, William G.; and Ripley, David A., 5,699,589, Cl. 19-200.000.
Ripley, William G.; and Ripley, David A. Laser cleaning and bleaching apparatus. 5,699,589, Cl. 19-200.000.
Rippert, Nils: *See—*
Duvinage, Frank; Paule, Markus; Krämer, Michael; Rippert, Nils; and Enderle, Christian, 5,699,765, Cl. 123-315.000.
Risdon Corporation: *See—*
Ackermann, Walter T., 5,700,100, Cl. 401-4.000.
Rise, Frode: *See—*
Golman, Klaes; Andersson, Sven; Rise, Frode; Wistrand, Lars-Goran; and Wikstrom, Hakan, 5,700,448, Cl. 424-9.330.
Riso Kagaku Corporation: *See—*
Hara, Yoshikazu, 5,699,731, Cl. 101-119.000.
Ritland, Marcus A.; Readey, Dennis W.; Kleiner, Richard N.; and Sibold, Jack D., to Coors Ceramics Company. Method for sealing a filter. 5,700,373, Cl. 210-323.200.
Ritter, Eberhard, deceased (by Rosemarie Ritter-Horn, neé Horn, heiress): *See—*
Alberti, Klaus; Ritter, Eberhard, deceased; Westphal, Frank; and Wehmeier, Guido, 5,699,840, Cl. 141-313.000.
Ritter-Horn, Rosemarie, nee Horn, heiress: *See—*
Alberti, Klaus; Ritter, Eberhard, deceased; Westphal, Frank; and Wehmeier, Guido, 5,699,840, Cl. 141-313.000.
Ritz, Josef: *See—*
Fuchs, Hugo; Ritz, Josef; and Neubauer, Gerald, 5,700,358, Cl. 203-31.000.
Rivera, José B.: *See—*
Petrole, Anthony P.; and Rivera, José B., 5,700,523, Cl. 427-397.800.
Riverwood International Corporation: *See—*
Miller, Derek; Weitkamp, Thomas Edward; and Brown, Steve, 5,699,651, Cl. 53-448.000.
Rivier, Jean E.F.: *See—*
Olivera, Baldomero M.; Rivier, Jean E.F.; Cruz, Lourdes J.; Abogadie, Fe; Hopkins, Chris E.; Dykert, John; and Torres, Josep L., 5,700,778, Cl. 514-12.000.
RLT Acquisition, Inc.: *See—*
Kelly, Bryan M.; Petermeier, Norman B.; Kelly, Matthew F.; and Oltmann, J. Richard, 5,700,007, Cl. 273-118.00A.
Robert Bosch GmbH: *See—*
Gosdowski, Gerhard; Arleth, Werner; and Ulmer, Peter, 5,699,891, Cl. 198-370.100.
Habele, Michael, 5,699,703, Cl. 81-57.380.
Kleppner, Stephan; and Seitz, Ansgar, 5,699,773, Cl. 123-510.000.
Rodriguez-Amaya, Nestor, 5,700,139, Cl. 417-462.000.
Scheifele, Horst; Krieger, Eberhard; Heinisch, Ulrich; and Wentsch, Siegfried, 5,699,709, Cl. 83-236.000.
Woerner, Bernhard; Haug, Kurt; Fabry, Thomas; Kusserow, Peter; and Jenner, Bert, 5,700,079, Cl. 362-80.000.
Roberts, Larry G., to Whitaker Corporation, The. ATM systems. 5,701,291, Cl. 370-232.000.
Roberts, L. Jackson; and Morrow, Jason D., to Vanderbilt Unversity. Method and compositions to assess oxidative stress in vivo. 5,700,654, Cl. 435-25.000.
Roberts, Thomas A.: *See—*
Born, Gary A.; Roberts, Thomas A.; and Boor, Peter M., 5,699,662, Cl. 60-39.500.
Roberts, William P.: *See—*
Speer, Drew V.; Roberts, William P.; Morgan, Charles R.; and Ebner, Cynthia L., 5,700,554, Cl. 428-220.000.
Robertson, David O.: *See—*
Millett, Ronald P.; Tuck, Robin P.; Dennis, Blaine S.; and Robertson, David O., 5,701,459, Cl. 395-603.000.
Robertson, Walter D., III, to Emerson Electric Co. Pivoting valve assembly. 5,699,995, Cl. 251-129.150.
Robinault, Michel: *See—*
Renzo, Bernard; Robinault, Michel; and Urbain, Didier, 5,700,498, Cl. 425-532.000.
Robins, Simon Peter, to Rowett Research Institute, The. Method to detect bone and other connective tissue disorders in humans and animals. 5,700,693, Cl. 436-64.000.
Robins, Simon Peter, to Rowett Research Institute, The. Method to detect bone and other connective tissue disorders in humans and animals. 5,700,694, Cl. 436-64.000.
Roche Diagnostic Systems, Inc.: *See—*
Bühler, Jürg; and Müller, Siegfried, 5,700,429, Cl. 422-104.000.
Rockefeller University, The: *See—*
Wolpe, Stephen D.; and Cerami, Anthony, 5,700,466, Cl. 424-145.100.
Rocki, David Pap: *See—*
Van Doren, Matthew J.; Sauer, Don; Slocum, Alexander H.; Rocki, David Pap; Tam, Johann; and Gerszewski, Larry, 5,700,046, Cl. 294-119.100.
Rode, John E., to Temper Corporation. Apparatus for cutting a non-metallic magnetic component from a strip of non-metallic magnetic material useable on a rotor or the like. 5,699,706, Cl. 83-18.000.
Rodrigues, Allan Blase Joseph, to Du Pont de Nemours, E. I., and Company. Optimizing gray primer in multilayer coatings. 5,700,515, Cl. 427-140.000.
Rodriguez, Ricardo P.: *See—*
Cree, Robert E.; and Rodriguez, Ricardo P., 5,700,488, Cl. 425-72.100.
Rodriguez, Victor Jose. System for use in delivering air into the interior of a baby-bottle. 5,699,921, Cl. 215-11.500.
Rodriguez-Amaya, Nestor, to Robert Bosch GmbH. Fuel injection pump of the distributor type with a magnetically actuated valve member of a switching valve connected to a low-pressure piston. 5,700,139, Cl. 417-462.000.
Roehl, Robin L.: *See—*
Bathe, Duncan P. L.; Montgomery, Frederick J.; and Roehl, Robin L., 5,699,790, Cl. 128-204.220.
Roehm GmbH Chemische Fabrik: *See—*
Brehm, Manfred; Neeb, Rolf; Scharnke, Wolfgang; and Kerscher, Volker, 5,700,576, Cl. 428-412.000.
Krieg, Manfred; Weber, Christa; and Szigeti, Peter, 5,700,894, Cl. 526-323.200.
Müller, Michael; Benz, Volker; Numrich, Uwe; Pühler, Horst; and Wopker, Wilhelm, 5,700,566, Cl. 428-332.000.
Roets, David A.: *See—*
Loffus, Kevin D.; Hilbert, Thomas K.; Roets, David A.; and Livadas, Jerry E., 5,701,550, Cl. 399-44.000.
Rogers, Richard Michael; and Lagarde, Konrad Charles, to International Business Machines Corporation. Method for fulfilling requests of a web browser. 5,701,451, Cl. 395-600.000.
Rogers, Wesley A., to Electronic Development, Inc. Probe for sensing moculated signals and method of using same. 5,701,082, Cl. 324-628.000.
Rohard, Michel; and Glachet, Charles, to La Calhene. Disconnectable connecting device for two components with a non-circular outline, particularly oval. 5,700,043, Cl. 292-256.600.
Rohm Co., Ltd.: *See—*
Koga, Hiromi, 5,701,362, Cl. 382-149.000.
Kuga, Kaeko, 5,701,131, Cl. 345-8.000.
Nakamura, Shinji; and Kuriyama, Chojiro, 5,699,597, Cl. 29-25.030.
Rohrmann, Jürgen: *See—*
Dolle, Volker; Rohrmann, Jürgen; Winter, Andreas; and Antberg, Martin, 5,700,896, Cl. 526-351.000.
Rokosh, Joseph Matthew: *See—*

Rokosh, Thaddeus Jerome; and Rokosh, Joseph Matthew, 5,700,123, Cl. 414-11.000.
Rokosh, Thaddeus Jerome; and Rokosh, Joseph Matthew. Device for hoisting drywall sheets with automated deck loading. 5,700,123, Cl. 414-11.000.
Roland, Volker: *See—*
Koltze, Karl; Heinrich, Hans-Jürgen; Roland, Volker; and Voidel, Peter, 5,699,658, Cl. 57-76.000.
Roldan, Judith Marie: *See—*
Angelopoulos, Marie; Brusic, Vlasta A.; Graham, Teresita Ordonez; Purushothaman, Sampath; Saraf, Ravi F.; Shaw, Jane Margaret; Roldan, Judith Marie; and Viehbeck, Alfred, 5,700,398, Cl. 252-500.000.
Rolic AG: *See—*
Kelly, Stephen, 5,700,393, Cl. 252-299.630.
Romaneschi, Daniel J.; and Bendio, Jeff. Hose hanging apparatus having a drawer. 5,699,987, Cl. 248-89.000.
Romano, Jack W. Method and apparatus for drilling a curved bore in an object. 5,700,265, Cl. 606-80.000.
Roman-Roman, Sergio: *See—*
Hercend, Thierry; Triebel, Frederic; Roman-Roman, Sergio; and Ferradini, Laurent, 5,700,907, Cl. 530-324.000.
Ronen, Ronny, to Intel Corporation. Method of modifying an instruction set architecture of a computer processor to maintain backward compatibility. 5,701,442, Cl. 395-500.000.
Roof, Glenn L., to Baker Hughes Incorporated. Treatments to reduce aldol condensation and subsequent polymerization in caustic acid gas scrubbers. 5,700,368, Cl. 208-48.0AA.
Roovers, Wilhelmus Cornelus Waltherus Maria; and Choi, Chi Chung, to Van Doorne's Transmissie B.V. Method and apparatus for controlling the transmission ratio of a continuously variable transmission. 5,700,225, Cl. 477-46.000.
Rösch, Wolfgang; Sohn, Erich; Bauer, Klaus; and Bieringer, Hermann, to Hoechst Aktiengesellschaft. Pyrazolines for protecting crop plants against herbicides. 5,700,758, Cl. 504-106.000.
Rose, Floyd D. Tuning systems for stringed instruments. 5,700,965, Cl. 84-297.00R.
Rosemount Inc.: *See—*
Eryurek, Evren, 5,700,090, Cl. 374-210.000.
Rosen, Greg M.: *See—*
Hadtke, Frederick B.; El-Fakir, Linda; and Rosen, Greg M., 5,699,620, Cl. 30-452.000.
Rosen, Vicki A.: *See—*
Hattersley, Gary; and Rosen, Vicki A., 5,700,774, Cl. 514-2.000.
Rosenberg, Louis B.; and Jackson, Bernard G., to Immersion Human Interface Corp. Method and apparatus for providing a cursor control interface with force feedback. 5,701,140, Cl. 345-156.000.
Rosenburgh, John Howard; Piccinino, Ralph Leonard, Jr.; and Patton, David Lynn, to Eastman Kodak Company. Photographic processor and improved filter assembly. 5,701,540, Cl. 396-565.000.
Rosenquist, Joel C.: *See—*
Thompson, Ken J.; Everhart, John R.; Foster, Wayne G.; and Rosenquist, Joel C., 5,699,942, Cl. 223-42.000.
Rosenthal, Arthur L.; Light, Nicholas D.; and Haynes, Carla A., to Johnson & Johnson Medical, Inc. Heteromorphic sponges containing active agents. 5,700,476, Cl. 424-426.000.
Rosenthal, Arthur L.; Light, Nicholas D.; and Watt, Paul W., to Johnson & Johnson Medical, Inc. Bioabsorbable wound implant materials. 5,700,477, Cl. 424-426.000.
Ross, David O.; Southerland, Dale A.; and Gantt, Timothy D., to Rheem Manufacturing Co. Wet-base, down-fired water heater. 5,699,756, Cl. 122-17.000.
Ross Operating Vale Co.: *See—*
Weiler, Charles A., Jr.; and Bareno, Hendrik Pieter, 5,699,829, Cl. 137-383.000.
Rossen, Kai, to Merck & Co., Inc. Electrochemical oxidation. 5,700,364, Cl. 205-425.000.
Rossi, Michael Anthony: *See—*
Audi, Richard Francois; Smith, Donald Scott; Carroll, Phillip Patrick, III; and Rossi, Michael Anthony, 5,700,545, Cl. 428-131.000.
Rossisko-shveitsarskoe aktsionernoe obschestvo zakrytogo tipa "NOVA": *See—*
Gerasimov, Jury Vasilievich; Grinberg, Jury Moiseevich; Djuzhev, Georgy Andreevich; Kallistov, Anatoly Anatolievich; Kurilenko, Vladimir Iliich; and Rakhovsky, Vadim Izrailovich, 5,701,057, Cl. 315-111.210.
Rossman, Axel: *See—*
Puchinger, Franz; Rossman, Axel; Sikorski, Siegfried; and Wydra, Gerhard, 5,700,743, Cl. 442-243.000.
Rotec Industries: *See—*
Oury, Robert F.; Dingeldein, Mark S.; Ledger, Alan S.; and Gallione, Joseph P., 5,699,878, Cl. 187-234.000.
Roth, Don J., to United States of America, National Aeronautics and Space Administration. Precision thickness variation mapping via one-transducer ultrasonic high resolution profilometry for sample with irregular or rough surface. 5,700,955, Cl. 73-597.000.
Roth, Roger R., to Honeywell Inc. Method of semiautomatic ambient light sensor calibration in an automatic control system. 5,701,058, Cl. 315-150.000.
Rothmans, Benson & Hedges Inc.: *See—*
Bowen, Larry; Ayres, George Edward; Black, Gary; and Daoust, Jacques, 5,699,812, Cl. 131-374.000.
Roussel Uclaf: *See—*
Hercend, Thierry; Triebel, Frederic; Roman-Roman, Sergio; and Ferradini, Laurent, 5,700,907, Cl. 530-324.000.
Rowett Research Institute, The: *See—*
Robins, Simon Peter, 5,700,693, Cl. 436-64.000.
Robins, Simon Peter, 5,700,694, Cl. 436-64.000.
Roy, Carl Wilson; and Schempp, John Adams, Jr., to Eastman Kodak Company. Apparatus for constraining moving photographic film. 5,701,171, Cl. 355-76.000.
RPM Industries, Inc.: *See—*
Allen, Spencer W.; and Apostolides, John K., 5,699,764, Cl. 123-196.500.
Rubin, Gerry; Therrien, Marc; Chang, Henry; Karim, Felix; and Wassarman, David, to University of California, Regents of the. Protein kinase required for Ras signal transduction. 5,700,675, Cl. 435-194.000.
Ruby, Paul: *See—*
Fazio, Albert; Atwood, Gregory E.; Mi, James O.; and Ruby, Paul, 5,701,266, Cl. 365-185.030.
Rudzewicz, Robert G.: *See—*
Flaishans, Gary B.; Rudzewicz, Robert G.; and Dahl, Michael A., 5,699,857, Cl. 165-202.000.
Ruen Ryh Enterprise Co., Ltd.: *See—*
Hung, Tsang-Chung, 5,699,968, Cl. 239-526.000.
Rulli, Paul A.: *See—*
Webster, Marc W.; Saraswat, Vijay A.; Fromherz, Markus P. J.; Austin, John C.; Rulli, Paul A.; and McCue, Daniel Lawrence, III, 5,701,557, Cl. 399-77.000.
Ruminski, Peter Gerrard: *See—*
Phillion, Dennis Paul; Ruminski, Peter Gerrard; and Yalamanchili, Gopichand, 5,700,840, Cl. 514-628.000.
Rump, Martin. Register with injector nozzle. 5,700,192, Cl. 454-258.000.
Ruoslahti, Erkki I., to La Jolla Cancer Research Foundation. β_3 integrin cytoplasmic domain specific peptide and nucleic acid. 5,700,908, Cl. 530-324.000.
Ruoslahti, Erkki I.: *See—*
Pierschbacher, Michael D.; Ruoslahti, Erkki I.; and Dedhar, Shoukat, 5,700,681, Cl. 435-240.210.
Ruppi, Sakari, to Seco Tools AB. Multilayered alumina coated cemented carbide body. 5,700,569, Cl. 428-336.000.
Rürup, Claus; and Hennemann, Lothar Roland, to WAGO Verwaltungsgesellschaft mbH. Switching levers having selectively visible marking areas. 5,700,986, Cl. 200-50.320.
Russell, Keith: *See—*
Brown, Frederick Jeffrey; Russell, Keith; and Warwick, Paul James, Jr., 5,700,798, Cl. 514-229.800.
Russell, William C.: *See—*
Tran, Duc; Wadsworth, Robert D.; Ip, Tony K.; and Russell, William C., 5,701,411, Cl. 395-200.100.
Russmann, Eberhard: *See—*
Trauth, Bernhard; Hinzpeter, Matthias; Doppler, Clemens; and Russmann, Eberhard, 5,700,639, Cl. 435-6.000.
Russo, James; and Levine, Michael R., to Gemstar Development Corporation. Video time-shifting apparatus. 5,701,383, Cl. 386-46.000.
RXS Kabelgarnituren GmbH: *See—*
Froehlich, Franz-Fr; Khuwe, Wolf; and Meltsch, Hans-Juergen, 5,700,012, Cl. 277-66.000.
Ryan, Barry D., to A.C. Data Systems of Idaho, Inc. Power surge protection assembly. 5,701,227, Cl. 361-118.000.
Ryan, Charles P., to Bull Information Systems Inc. Data processing system and method using cache miss address prediction and forced LRU status in a cache memory to improve cache hit ratio. 5,701,426, Cl. 395-403.000.
Ryan, Christopher M.: *See—*
Edgington, Garry J.; and Ryan, Christopher M., 5,700,344, Cl. 156-336.000.
Rybolt, Arnold Carl: *See—*
Harris, Brent Alan; Drew, Shawn Daren; and Rybolt, Arnold Carl, 5,700,165, Cl. 439-621.000.
Rydell, Susan M. Laundry sorting and storage device and method. 5,700,293, Cl. 8-137.000.
Ryobi Ltd.: *See—*
Usui, Hirotake; Matsuura, Kazuya; and Nitta, Shin, 5,700,422, Cl. 266-94.000.
Rysin, Alexander: *See—*
Chisholm, Thomas J.; Richard, Gary; and Rysin, Alexander, 5,701,003, Cl. 250-205.000.
Ryu, Beom-Geol: *See—*
Lee, Young-Gil; and Ryu, Beom-Geol, 5,699,674, Cl. 62-115.000.
Ryu, Soo-Sun: *See—*
Lee, Chang-Yong; Kim, Joo-Hwan; and Ryu, Soo-Sun, 5,699,848, Cl. 164-46.000.
S. C. Johnson Commerical Markets, Inc.: *See—*
Sandvick, Paul E.; and Verbrugge, Calvin J., 5,700,516, Cl. 427-155.000.
Saalasti, Timo Tapio, to Finbark Oy. Method and pulp washing machine for washing of pulp or any corresponding material. 5,699,573, Cl. 8-156.000.
Sachdev, Krishna G.; Berger, Michael; and Chace, Mark S., to International Business Machines Corporation. Solvent-free epoxy based adhesives for semiconductor chip attachment and process. 5,700,581, Cl. 428-447.000.
Sacken, Ulrich Von: *See—*
Zhong, Qiming; Sacken, Ulrich Von; Gao, Yuan; and Dahn, Jeffery Raymond, 5,700,597, Cl. 429-218.000.

Sacripante, Guerino G.: *See*—
Pontes, Fatima M.; Sacripante, Guerino G.; Drappel, Stephan V.; Paine, Anthony J.; and Kovacs, Gregory J., 5,700,316, Cl. 106-31.580.
Sadacem, S.A.: *See*—
Bloch, Didier; Le Cras, Frédéric; and Strobel, Pierre, 5,700,442, Cl. 423-591.000.
Sadamori, Hiroyuki: *See*—
Nogami, Tadahiko; Nakamura, Ichiro; Hiraku, Kenji; Sadamori, Hiroyuki; Yasuda, Kenichi; Narita, Kenjiro; Horii, Kenji; and Shimogama, Hironori, 5,699,693, Cl. 72-199.000.
Safabakhsh, Ali Reza, to Kulicke and Soffa Investments, Inc. Multi resonance unibody ultrasonic transducer. 5,699,953, Cl. 228-110.100.
Safe-T-Vans, Inc.: *See*—
Zalewski, Wojciech T.; Steele, Guy; and MacKenzie, Christopher J., 5,700,026, Cl. 280-704.000.
Safonov, Vladimir Olegovich, to Sun Microsystems, Inc. Method and apparatus for compiler symbol table organization with no lookup in semantic analysis. 5,701,490, Cl. 395-705.000.
SAGEM SA: *See*—
LaFleur, Bernard, 5,699,664, Cl. 60-307.000.
Sagiyama, Tatsuya; Baba, Fumihiko; Saito, Kaname; Matsushima, Takashi; and Iizuka, Hitoshi, to Toyota Jidosha Kabushiki Kaisha; and Kabushiki Kaisha Saginomiya Seisakusho. Testing apparatus of steering system. 5,700,951, Cl. 73-11.080.
Sahne, Farhad Noroozi: *See*—
Stanford, Thomas H.; Sahne, Farhad Noroozi; Riches, Thomas P.; and O'Neill, Robert, 5,701,356, Cl. 381-187.000.
Saida, Kazunori; and Yamaguchi, Hiroyuki, to Nippondenso Co., Ltd. Air conditioner for vehicles. 5,699,851, Cl. 165-42.000.
Saindon, Stephen A.; Heindel, Kevin O.; and Morrow, James G., to CMD Corporation. Apparatus and method for detecting a formation in a sheet material. 5,701,180, Cl. 356-429.000.
Sainio, Markku: *See*—
Laiho, Erkki; and Sainio, Markku, 5,700,586, Cl. 428-507.000.
Saint-Gobain Vitrage: *See*—
Jeanvoine, Pierre; Lismonde, Michel; and Viestet, Jacques, 5,700,579, Cl. 428-437.000.
Saisila, Chartchai: *See*—
Hahn, Karl-Heinz; and Saisila, Chartchai, 5,700,976, Cl. 174-58.000.
Saito, Chitoshi, to Sanshin Kogyo Kabushiki Kaisha. Fuel injection system for engine. 5,699,766, Cl. 123-257.000.
Saito, Izumu; Kanegae, Yumi; and Nakai, Michio, to Sumitomo Pharmaceuticals Company, Limited. Recombinant adenovirus with removed EZA gene and method of preparation. 5,700,470, Cl. 424-233.100.
Saito, Jun: *See*—
Sekiya, Harukazu; Saito, Jun; Isoda, Yuzo; Uchida, Yasuhiro; Izumi, Makoto; and Kuwata, Takashi, 5,700,006, Cl. 271-241.000.
Saito, Kaname: *See*—
Sagiyama, Tatsuya; Baba, Fumihiko; Saito, Kaname; Matsushima, Takashi; and Iizuka, Hitoshi, 5,700,951, Cl. 73-11.080.
Saito, Koichi: *See*—
Suzuki, Masao; Saito, Koichi; and Nakata, Masahide, 5,700,396, Cl. 252-309.000.
Saito, Susumu: *See*—
Mochizuki, Takeshi; and Saito, Susumu, 5,701,190, Cl. 359-205.000.
Saito, Yasuo; Tahara, Shigenori; Yamada, Hiroyuki; and Hohkita, Atsushi, to Hitachi, Ltd.; and Hitachi Car Engineering Co., Ltd. Throttle control device. 5,699,768, Cl. 123-400.000.
Saito, Yoshiaki; Okuno, Shiho; and Inomata, Koichiro, to Kabushiki Kaisha Toshiba. Magnetoresistance effect element. 5,700,588, Cl. 428-611.000.
Saitoh, Takashi: *See*—
Shimizu, Shigeru; Saitoh, Takashi; Uzawa, Masashi; and Takayanagi, Yasuyuki, 5,700,399, Cl. 252-500.000.
Sakabe, Namiko; Ishimaru, Toshiaki; Kobayashi, Yoshiaki; and Suzuki, Takashi, to Olympus Optical Co., Ltd. Camera capable of measuring power source voltage. 5,701,527, Cl. 396-277.000.
Sakaguchi, Shinji; Aoai, Toshiaki; and Sato, Kenichiro, to Fuji Photo Film Co., Ltd. Radiation ray sensitive resin compostion containing at least two different naphthoquinonediazide sulfonic acid esters and an alkali-soluble low-molecular compound. 5,700,620, Cl. 430-191.000.
Sakai, Koji, to Nisshinbo Industries Inc. Vehicle brake control device. 5,700,070, Cl. 303-115.400.
Sakai, Rie: *See*—
Nogami, Tatsuya; Sakai, Rie; and Hosoya, Takeshi, 5,700,391, Cl. 252-299.010.
Sakai, Takeshi: *See*—
Yamazaki, Ryokichi; Sakai, Takeshi; and Kawakami, Fukushi, 5,700,052, Cl. 297-217.300.
Sakai, Yoshio: *See*—
Meguro, Satoshi; Uchibori, Kiyofumi; Suzuki, Norio; Motoyoshi, Makoto; Koike, Atsuyoshi; Yamanaka, Toshiaki; Sakai, Yoshio; Kaga, Toru; Hashimoto, Naotaka; Hashimoto, Takashi; Honjou, Shigeru; and Minato, Osamu, 5,700,705, Cl. 437-52.000.
Motogi, Jun; Sakai, Yoshio; and Takeda, Sunao, 5,699,807, Cl. 128-677.000.
Sakamaki, Hisashi: *See*—
Hosaka, Masao; Kimura, Yoshimasa; and Sakamaki, Hisashi, 5,701,481, Cl. 395-676.000.
Sakamoto, Atsuhiro: *See*—
Inokuchi, Iwane; Kamegaya, Shigeru; Oshidari, Toshikazu; and Sakamoto, Atsuhiro, 5,700,135, Cl. 417-269.000.
Sakamoto, Kazunori: *See*—
Okumura, Hideki; Sakamoto, Kazunori; Kobata, Kiyoshi; and Kubota, Kazunori, 5,701,225, Cl. 360-132.000.
Sakamoto, Masahiko, to Sercomp Corporation. Liquid dispensing system. 5,699,936, Cl. 222-107.000.
Sakamoto, Naoji: *See*—
Tada, Naosumi; and Sakamoto, Naoji, 5,700,215, Cl. 474-110.000.
Sakamoto, Yoshio: *See*—
Matsuo, Shinta; and Sakamoto, Yoshio, 5,701,357, Cl. 381-199.000.
Sakane, Shinsuke: *See*—
Yokoyama, Satoshi; Sakane, Shinsuke; and Kamikado, Masaru, 5,700,069, Cl. 303-115.200.
Sakata, Hajime: *See*—
Ouchi, Toshihiko; Sakata, Hajime; Ohguri, Noriaki; and Uchida, Mamoru, 5,701,325, Cl. 372-96.000.
Sakate, Nobuo: *See*—
Fujita, Makoto; Yamamoto, Yukio; Sakate, Nobuo; and Hirabara, Shoji, 5,701,576, Cl. 419-29.000.
Sakaue, Takahiro: *See*—
Ogata, Kazumi; Sakaue, Takahiro; and Sameshima, Shogo, 5,700,789, Cl. 514-100.000.
Sakaya, Taiichi: *See*—
Kotani, Kozo; Kawakita, Toshio; Sakaya, Taiichi; and Kuroda, Toshiya, 5,700,560, Cl. 428-325.000.
Sakita, Masami. Elevator system. 5,699,879, Cl. 187-249.000.
Sakui, Masato, to Mitsubishi Denki Kabushiki Kaisha. Rotary head cleaning apparatus and method of controlling same. 5,701,224, Cl. 360-128.000.
Sakura Hobby Craft Co., Ltd.: *See*—
Horikiri, Yataro, 5,700,521, Cl. 427-258.000.
Sakurai, Michio, to NEC Corporation. Method of polishing semiconductor substrate. 5,700,348, Cl. 156-636.100.
Sakurai, Naoki: *See*—
Hanaoka, Koumei; Sakurai, Naoki; and Mori, Mutsuhiro, 5,701,018, Cl. 257-140.000.
Sakuta, Toshiyuki: *See*—
Oguchi, Satoshi; Ishihara, Masamichi; Ito, Kazuya; Murakami, Gen; Anjoh, Ichiro; Sakuta, Toshiyuki; Yamaguchi, Yasunori; Kasama, Yasuhiro; Udagawa, Tetsu; Miyamoto, Eiji; Matsuno, Youichi; Satoh, Hiroshi; and Nozoe, Atsusi, 5,701,031, Cl. 257-686.000.
Salamat, Bijan: *See*—
Cook, Robert D.; and Salamat, Bijan, 5,700,072, Cl. 303-135.000.
Salamon, Péter: *See*—
Alesz, József; Busznyák, Imre; Glódi, István; Kiss, András; Kukta, Józsefné; Nagy, Béla; Salamon, Péter; Szentpétery, Elemér; Tóth, Zoltán; and Ujhelyi, Tamás, 5,700,957, Cl. 73-861.357.
Salerno, Robert J.: *See*—
Canfield, Stephen L.; Reinholtz, Charles F.; Salerno, Robert J.; and Ganino, Anthony J., 5,699,695, Cl. 74-490.060.
Salice, Luciano, to Arturo Salice S.p.A. Mounting plate pair for the fastening of hinge arms of furniture hinges or similar. 5,700,105, Cl. 403-408.100.
Saling, Peter: *See*—
Sens, Rüdiger; Reichelt, Helmut; and Saling, Peter, 5,700,757, Cl. 503-227.000.
Salk Institute for Biological Studies, The: *See*—
Olivera, Baldomero M.; Rivier, Jean E.F.; Cruz, Lourdes J.; Abogadie, Fe; Hopkins, Chris E.; Dykert, John; and Torres, Josep L., 5,700,778, Cl. 514-12.000.
Sallee, Verney L.: *See*—
Dean, Thomas R.; Hellberg, Mark; and Sallee, Verney L., 5,700,835, Cl. 514-530.000.
Salo, Rodney W., to Cardiac Pacemakers, Inc. Method and apparatus for pacing patients with severe congestive heart failure. 5,700,283, Cl. 607-17.000.
Salome, Marc: *See*—
Legoux, Richard; Maldonado, Paul; and Salome, Marc, 5,700,665, Cl. 435-71.200.
Salomon, Jean-Paul: *See*—
Marchand, Jean-Louis; Palomera, Michel; Peeters, Michel; and Salomon, Jean-Paul, 5,700,384, Cl. 219-69.120.
Salonen, Eeva-Marjatta. Diagnostic method, test kit, drug and therapeutic treatment for autoimmune diseases. 5,700,641, Cl. 435-6.000.
Sameshima, Shogo: *See*—
Ogata, Kazumi; Sakaue, Takahiro; and Sameshima, Shogo, 5,700,789, Cl. 514-100.000.
Sams, Philip John: *See*—
Haq, Ziya; Khan-Lodhi, Abid Nadim; and Sams, Philip John, 5,700,387, Cl. 252-8.630.
Samson Aktiengesellschaft: *See*—
Kemmler, Lothar; and Kolbenschlag, Stefan, 5,699,824, Cl. 137-85.000.
Samsung Corning Co., Ltd.: *See*—
Park, Tae Ho; Kim, Chun Suk; and Moon, Sung Hun, 5,700,744, Cl. 501-15.000.
Samsung Display Devices Co., Ltd.: *See*—
Kim, Chang-seob; Son, Seok-bong; Kim, Sang-kyun; and Jeong, Bong-uk, 5,701,052, Cl. 313-346.00R.
Park, Chang-won; Yang, Jun-mo; and Lee, Joon-bae, 5,701,054, Cl. 313-467.000.
Song, Yong-seok, 5,701,053, Cl. 313-412.000.
Samsung Electro-Mechanics Co., Ltd.: *See*—
Kim, Chang Sik, 5,700,324, Cl. 118-407.000.
Samsung Electronics Co., Ltd: *See*—

Jang, Deok hwan, 5,699,950, Cl. 228-1.100.
Jeon, Jun-Young; and Park, Pil-Soon, 5,701,072, Cl. 323-312.000.
Kim, Chang-yong, 5,701,440, Cl. 395-500.000.
Kim, Hae-Sug, 5,701,587, Cl. 455-34.100.
Lee, Byung-hun, 5,700,603, Cl. 430-5.000.
Lee, Dong-Jin, 5,701,284, Cl. 369-50.000.
Lee, Hae-Don; and Shin, Jong-Sub, 5,700,996, Cl. 219-626.000.
Lee, Kyu-chan; Lee, Sang-bo; and Sim, Jai-hoon, 5,701,268, Cl. 365-205.000.
Lee, Seung-bun, 5,701,271, Cl. 365-230.020.
Moon, Yong-Ho; Kim, Jae-Ho; and Park, Dong-Seek, 5,701,369, Cl. 382-249.000.
Park, Won-mo; and Lee, Jong-jin, 5,700,709, Cl. 437-60.000.
Seol, Young-yun, 5,701,215, Cl. 360-96.500.
Seong, Pyong-yong, 5,701,288, Cl. 369-112.000.
Sung, Moo-Kyung, 5,700,003, Cl. 271-110.000.
Yang, Jun Hyun, 5,701,237, Cl. 363-20.000.
Samulewicz, Thomas. Circular tactile keypad. 5,701,123, Cl. 341-22.000.
Sanada, Yoshika: *See*—
Morimoto, Kiyoshi; Watanabe, Yasushi; Sanada, Yoshika; Miwa, Teiichi; and Masada, Tomoaki, 5,700,492, Cl. 425-100.000.
Sanchez, Jean-Yves; Alloin, Fannie; and Masson, Jacqueline, to Centre National de la Recherche Scientifique; and Hydro-Quebec. Process for the preparation of poly(oxyalkylene) terpolymer by hydrogenation. 5,700,880, Cl. 525-403.000.
Sancoff, Gregory E.; Doyle, Mark C.; and Field, Frederic P., to Winfield Medical. Apparatus for the generation of gas pressure for controlled fluid delivery. 5,700,245, Cl. 604-145.000.
Sandell, Anders: *See*—
Ward, Torbjorn; and Sandell, Anders, 5,701,294, Cl. 370-252.000.
Sanders, Mark Andrew; and Kalogroulis, Alexander Joseph, to Keymed (Medical & Industrial Equipment) Ltd. Support apparatus. 5,699,567, Cl. 5-614.000.
Sanderson, Kenneth Russell: *See*—
Baker, Ernest Dysart; Dinwiddie, John Monroe, Jr.; Grice, Lonnie Edward; Joyce, James Maurice; Loffredo, John Mario; and Sanderson, Kenneth Russell, 5,701,502, Cl. 395-800.000.
Sandford, Paul A.: *See*—
Soon-Shiong, Patrick; Desai, Neil P.; Sandford, Paul A.; Heintz, Roswitha A.; and Sojomihardjo, Soebianto, 5,700,848, Cl. 522-7.000.
Sandhu, Gurtej S.; and Doan, Trung Tri, to Micron Technology, Inc. System for real-time control of semiconductor wafer polishing. 5,700,180, Cl. 451-5.000.
Sandoz Ltd.: *See*—
Lee, Shy-Fuh; Nishizaka, Takashi; and Komatsubara, Kenichi, 5,700,762, Cl. 504-292.000.
Sandvick, Paul E.; and Verbrugge, Calvin J., to S. C. Johnson Commerical Markets, Inc. Repulpable hot melt polymer/wax compositions for fibrous products. 5,700,516, Cl. 427-155.000.
Sandvik AB: *See*—
Sundström, Erik, 5,699,619, Cl. 30-383.000.
Sanford, James Robert Markus, to Helena Laboratories Corporation. Sports training system. 5,700,205, Cl. 473-232.000.
Sano, Hideo, to NEC Corporation. Optical disk device capable of recording a control parameter on unused optical disk area. 5,701,281, Cl. 369-32.000.
Sano, Hisashi; Nakamura, Sou; Sawada, Hideshi; Adachi, Shuichi; and Kasuya, Hideki, to Hokda Giken Kogyo Kabushiki Kaisha. Active vibration controller. 5,701,349, Cl. 381-71.000.
Sano, Michiko. Bodysuit having freely moveable straps. 5,699,559, Cl. 2-67.000.
Sano, Yasushi, to Micro-Tec Company Ltd. Combination stretch screen and its production method. 5,699,732, Cl. 101-127.000.
Sanofi: *See*—
Legoux, Richard; Maldonado, Paul; and Salome, Marc, 5,700,665, Cl. 435-71.200.
Sanshin Kogyo Kabushiki Kaisha: *See*—
Saito, Chitoshi, 5,699,766, Cl. 123-257.000.
Santo, Tsuyoshi: *See*—
Miyazaki, Takeshi; Tanaka, Kazumi; Santo, Tsuyoshi; Ohnishi, Toshikazu; Fukui, Tetsuro; and Okamoto, Tadashi, 5,700,647, Cl. 435-6.000.
Sanyo Denki Co., Ltd.: *See*—
Yokozawa, Shinjiro; Kodama, Nobumasa; and Ogawara, Toshiki, 5,701,045, Cl. 310-62.000.
Sanyo Electric Co., Ltd.: *See*—
Kaji, Masanori; Ono, Masayosi; Takabatake, Yosinobu; Kaido, Yosinori; Haga, Takahiro; and Hikosaka, Masaru, 5,701,067, Cl. 320-2.000.
Nagai, Toshitake; Ikumi, Yonezo; Kakinuma, Takahide; Sawada, Norio; Sato, Koji; and Watanabe, Masato, 5,699,675, Cl. 62-149.000.
Oshima, Hironobu; and Matumori, Hiroyuki, 5,699,786, Cl. 128-200.210.
Shima, Masaki; and Terada, Norihiro, 5,700,467, Cl. 136-249.000.
Sanyo Electronic Co., Ltd.: *See*—
Mamada, Takao, 5,701,353, Cl. 381-106.000.
Sara Lee Corporation: *See*—
Thompson, Ken J.; Everhart, John R.; Foster, Wayne G.; and Rosenquist, Joel C., 5,699,942, Cl. 223-42.000.
Saraf, Ravi F.: *See*—
Angelopoulos, Marie; Brusic, Vlasta A.; Graham, Teresita Ordonez; Purushothaman, Sampath; Saraf, Ravi F.; Shaw, Jane Margaret; Roldan, Judith Marie; and Viehbeck, Alfred, 5,700,398, Cl. 252-500.000.
Sarai, Kiyoko: *See*—
Yamada, Yukio; Asami, Osamu; Sugiyama, Hidehiko; Idekoba, Chie; Hoshino, Fumihiko; Hirai, Masana; Kajino, Tsutomu; Imaeda, Takao; and Sarai, Kiyoko, 5,700,659, Cl. 435-69.100.
Sarangdhar, Nitin V.: *See*—
Singh, Gurbir; Wang, Wen-Hann; Rhodehamel, Michael W.; Bauer, John M.; and Sarangdhar, Nitin V., 5,701,503, Cl. 395-800.000.
Saraswat, Vijay A.: *See*—
Webster, Marc W.; Saraswat, Vijay A.; Fromherz, Markus P. J.; Austin, John C.; Rulli, Paul A.; and McCue, Daniel Lawrence, III, 5,701,557, Cl. 399-77.000.
Sargeant, Steven J.; Behan, Niall D.; Atherton, Dave; Yang, Sen; Huang, Miaoling; and Sun, Kang, to Arkwright, Incorporated. Polymer matrix coating for ink jet media. 5,700,582, Cl. 420-476.600.
Sarin, Virender Kumar; Absolom, Darryl Robin; and Gupta, Shanker Lal, to Abbott Laboratories. Fatty acid - pulmonary surfactant conjugates. 5,700,777, Cl. 514-12.000.
Sarma, Mamillapalli Ramabadhra: *See*—
Vyas, Krishnamurthi; Prabhakar, Chebiyyam; Rao, Sreenivas Dharmaraja; Sarma, Mamillapalli Ramabadhra; Reddy, Om Gaddam; Ramanujam, Rajagopalan; and Chakrabarti, Ranjan, 5,700,820, Cl. 514-369.000.
Sarshar, Sepehr: *See*—
Mjalli, Adnan; and Sarshar, Sepehr, 5,700,826, Cl. 514-397.000.
Sasagaki, Nobuaki: *See*—
Fukuhara, Toru; Sosa, Toshio; Dobashi, Toshio; Sasagaki, Nobuaki; and Hara, Masaharu, 5,701,519, Cl. 396-48.000.
Sasaki, Hiroki, to Nissan Motor Co., Ltd. Integrated control system for 4WD vehicles for controlling driving torque distribution. 5,701,247, Cl. 364-424.098.
Sasaki, Hitoshi: *See*—
Izunome, Koji; Kawanishi, Sourokou; Togawa, Shinji; Ikari, Atsushi; Sasaki, Hitoshi; and Kimura, Shigeyuki, 5,700,320, Cl. 117-19.000.
Sasaki, Katsuro: *See*—
Ikeda, Shuji; Meguro, Satoshi; Hashiba, Soichiro; Kuramoto, Isamu; Koike, Atsuyoshi; Sasaki, Katsuro; Ishibashi, Koichiro; Yamanaka, Toshiaki; Hashimoto, Naotaka; Moriwaki, Nobuyuki; Takahashi, Shigeru; Hiraishi, Atsushi; Kobayashi, Yutaka; and Yukutake, Seigou, 5,700,704, Cl. 437-52.000.
Sasaki, Kazuyuki: *See*—
Ohneda, Akira; Sasaki, Kazuyuki; Natori, Yohei; and Nagasaki, Tomohisa, 5,700,776, Cl. 514-12.000.
Sasaki, Masakazu, to NEC Corporation. Semiconductor having polycrystalline silicon sandwiched by semiconductor substrate and metal silicide. 5,701,029, Cl. 257-377.000.
Sasaki, Masatomi: *See*—
Takesawa, Shingo; Hosoya, Noriyuki; and Sasaki, Masatomi, 5,700,372, Cl. 210-321.810.
Sasaki, Shinichi: *See*—
Araki, Ryuji; Kubota, Atsushi; Sasaki, Shinichi; and Miura, Koji, 5,701,562, Cl. 399-265.000.
Sasaki, Takamitsu; and Nomura, Hiroshi, to Asahi Kogaku Kogyo Kabushiki Kaisha. Rotary feed mechanism. 5,701,206, Cl. 359-704.000.
Sasaki, Takashi: *See*—
Inoue, Atsushi; Kaku, Nobuyuki; and Sasaki, Takashi, 5,701,214, Cl. 360-71.000.
Sasaki, Toshio: *See*—
Kanda, Yuji; Kokubo, Toshiyuki; Sato, Yufu; Sasaki, Toshio; Shiraishi, Hiroyuki; and Shigematsu, Yuji, 5,700,895, Cl. 526-348.000.
Sasayama, Hiroyuki, to Fuji Photo Film Co., Ltd. Automatic developing apparatus for photosensitive lithographic printing plates. 5,701,542, Cl. 396-578.000.
SASIB S.p.A: *See*—
Spada, Walter; and Di Camillo, Orazio, 5,699,896, Cl. 198-747.000.
SASIB S.p.A.: *See*—
Spada, Valter, 5,699,893, Cl. 198-478.100.
Spada, Walter; and Gherardi, Gian Luigi, 5,699,979, Cl. 242-559.300.
Satchwell, Thomas Erwin, III. Collapsible railing for mounting on a vehicle roof. 5,699,876, Cl. 182-127.000.
Sato, Harumi: *See*—
Kobayashi, Akira; Kurashima, Hideo; Sato, Harumi; Fujita, Satoshi; and Imazu, Katsuhiro, 5,700,529, Cl. 428-35.800.
Sato, Katsuhiro: *See*—
Nogami, Sumitaka; Kitazawa, Michihiro; and Sato, Katsuhiro, 5,700,613, Cl. 430-58.000.
Sato, Katsutoshi: *See*—
Ootaka, Yoshimitsu; Kato, Tomoyuki; and Sato, Katsutoshi, 5,701,559, Cl. 399-149.000.
Sato, Kenichiro: *See*—
Sakaguchi, Shinji; Aoai, Toshiaki; and Sato, Kenichiro, 5,700,620, Cl. 430-191.000.
Sato, Koji: *See*—
Nagai, Toshitake; Ikumi, Yonezo; Kakinuma, Takahide; Sawada, Norio; Sato, Koji; and Watanabe, Masato, 5,699,675, Cl. 62-149.000.
Sato, Kunihito: *See*—
Ogawa, Kazuo; Enomoto, Takaaki; Kawai, Masato; Kato, Minoru; and Sato, Kunihito, 5,701,245, Cl. 364-424.046.

Sato, Masahiko, to NEC Corporation. Super-resolution optical head device which produces side spots without side lobes. 5,701,286, Cl. 369-109.000.
Sato, Mitsuru; Oomori, Katsumi; Ishikawa, Kiyoshi; Iguchi, Etsuko; and Kaneko, Fumitake, to Tokyo Ohka Kogyo Co., Ltd. Negative-working photoresist composition. 5,700,625, Cl. 430-270.100.
Sato, Muneyoshi: *See—*
Ishiguro, Minoru; Iwamoto, Jun'ichi; and Sato, Muneyoshi, 5,701,520, Cl. 396-48.000.
Sato, Nobumasa, to Kanebo, Ltd. Lipcolor composition. 5,700,453, Cl. 424-64.000.
Sato, Norio; and Tanaka, Hitoshi, to Asahi Kogaku Kogyo Kabushiki Kaisha. Clutch apparatus for zoom lens barrel. 5,701,208, Cl. 359-822.000.
Sato, Yoko: *See—*
Maeda, Hirokazu; Furuta, Hitoshi; Takahashi, Taro; Takei, Chiemi; Kurita, Hiroko; and Sato, Yoko, 5,700,397, Cl. 252-312.000.
Sato, Yoshiyuki: *See—*
Morita, Shinsaku; and Sato, Yoshiyuki, 5,700,014, Cl. 277-167.500.
Sato, Yotaro: *See—*
Endo, Isao; Komatsu, Toru; Sato, Yotaro; Nomori, Hiroyuki; Shigeta, Kunio; and Onodera, Masahiro, 5,701,553, Cl. 399-55.000.
Sato, Yufu: *See—*
Kanda, Yuji; Kokubo, Toshiyuki; Sato, Yufu; Sasaki, Toshio; Shiraishi, Hiroyuki; and Shigematsu, Yuji, 5,700,895, Cl. 526-348.000.
Satoh, Hiroshi: *See—*
Oguchi, Satoshi; Ishihara, Masamichi; Ito, Kazuya; Murakami, Gen; Anjoh, Ichiro; Sakuta, Toshiyuki; Yamaguchi, Yasunori; Kasama, Yasuhiro; Udagawa, Tetsu; Miyamoto, Eiji; Matsuno, Youichi; Satoh, Hiroshi; and Nozoe, Atsusi, 5,701,031, Cl. 257-686.000.
Satoh, Mitsuyoshi; Numabe, Hideo; and Matsuda, Hideaki, to Tohoku Ricoh Co., Ltd. Printer and method of printing using the same. 5,700,096, Cl. 400-225.000.
Satoh, Shuji, to NEC Corporation. Microprocessor with multiple supervisor interrupt processing function. 5,701,494, Cl. 395-735.000.
Satou, Shigeru: *See—*
Matsuura, Sadahiro; Satou, Shigeru; Kondou, Yasuhiro; and Igarashi, Yoshiaki, 5,701,066, Cl. 318-808.000.
Sauer, Don: *See—*
Van Doren, Matthew J.; Sauer, Don; Slocum, Alexander H.; Rocki, David Pap; Tam, Johann; and Gerszewski, Larry, 5,700,046, Cl. 294-119.100.
Sauer, Joe D.: *See—*
Magin, Ralph W.; Sauer, Joe D.; and Quebedeaux, Deborah A., 5,700,760, Cl. 504-206.000.
Sauer, Jude S.; Greenwald, Roger J.; Oravecz, Michael G.; and Kobilansky, Alex, to United States Surgical Corporation. Endoscope attachment for changing angle of view. 5,700,236, Cl. 600-175.000.
Saulas, Alain: *See—*
Blin, Patrick; Daniel, Jean-Yves; and Saulas, Alain, 5,699,957, Cl. 229-117.120.
Saurenbach, Frank; and Fuss, Hans-Achim, to Forschungszentrum Jülich GmbH. Mounting arrangement for a probe tip of a scanning force or tunneling microscope. 5,701,381, Cl. 385-139.000.
Savariar-Hauck, Celin: *See—*
Baumann, Harald; Dwars, Udo; Savariar-Hauck, Celin; and Timpe, Hans-Joachim, 5,700,619, Cl. 430-175.000.
Sawada, Hideshi: *See—*
Sano, Hisashi; Nakamura, Sou; Sawada, Hideshi; Adachi, Shuichi; and Kasuya, Hideki, 5,701,349, Cl. 381-71.000.
Sawada, Norio: *See—*
Nagai, Toshitake; Ikumi, Yonezo; Kakinuma, Takahide; Sawada, Norio; Sato, Koji; and Watanabe, Masato, 5,699,675, Cl. 62-149.000.
Sawada, Takashi: *See—*
Takata, Akira; Hikawa, Tetsuo; Sawada, Takashi; Yiu, Tom Dang-hsing; and Ni, Ful-Long, 5,700,975, Cl. 174-52.400.
Sawtek Inc.: *See—*
Andersen, Jorgen W., 5,700,952, Cl. 73-19.030.
Sawyer, Lawrence Howell: *See—*
McDowall, Debra Jean; Sawyer, Lawrence Howell; Wright, Robert David; and Varona, Eugenio, 5,700,254, Cl. 604-378.000.
Saxby, Michael Ernest, to Constantia (International) Limited. Gas cartridge. 5,700,972, Cl. 102-440.000.
Sayanagi, Kazuya: *See—*
Okada, Takekazu; Maruyama, Yuichi; and Sayanagi, Kazuya, 5,701,128, Cl. 343-700.0MS.
Scarazzo, Christopher; and Mears, Lawrence N., to OEM/Miller Corporation. Mold for making composite tube couplings. 5,700,493, Cl. 425-116.000.
Schadegg, John: *See—*
Glover, Neal; Zook, Christopher P.; Schadegg, John; and Witt, William L., 5,701,304, Cl. 371-10.200.
Schaefer, Philip R., to Simula Inc. Method and apparatus for measuring distances using fiber optics. 5,701,006, Cl. 250-227.160.
Schaefer, Roger W.; Capanna, Michael; and Scott, James D., to Centurion Safety Products, Inc. Belt-mounted flashlight holder. 5,699,943, Cl. 224-197.000.
Schäfer, Peter; Klintz, Ralf; Hamprecht, Gerhard; Heistracher, Elisabeth; Westphalen, Karl-Otto; Gerber, Matthias; and Walter, Helmut, to BASF Aktiengesellschaft. Substituted 1-amino-3-phenyluracils. 5,700,805, Cl. 514-269.000.
Scharnke, Wolfgang: *See—*
Brehm, Manfred; Neeb, Rolf; Scharnke, Wolfgang; and Kerscher, Volker, 5,700,576, Cl. 428-412.000.
Schawbel Corporation, The: *See—*
Bonnema, James; Wang, Wen Der; Demarest, Scott W.; Furner, Paul E.; and Hildebrandt, Donald W., 5,700,430, Cl. 422-125.000.
Scheel, Jerry Lynn; and Siebels, Randy Luther, to Square D Company. Circuit breaker accessory module. 5,701,110, Cl. 335-132.000.
Schefcsik, Nikolaus: *See—*
Koch, Norbert; Böhm, Kurt; Schefcsik, Nikolaus; and Eipper, Jürgen, 5,699,884, Cl. 188-196.00B.
Scheifele, Horst; Krieger, Eberhard; Heinisch, Ulrich; and Wentsch, Siegfried, to Robert Bosch GmbH. Device for severing packing strips having blisters from a continuous film. 5,699,709, Cl. 83-236.000.
Scheil, Hermann: *See—*
Emshoff, Horst-Werner; Intichar, Lutz; and Scheil, Hermann, 5,701,044, Cl. 310-54.000.
Scheiter, Thomas: *See—*
Klose, Helmut; Biebl, Markus; Scheiter, Thomas; and Hierold, Christofer, 5,700,702, Cl. 437-34.000.
Schellinger, Michael J.: *See—*
Lee, Steven G.; Iehl, Brian D.; Manya, Omerom; Schellinger, Michael J.; and D'Avello, Robert F., 5,701,589, Cl. 455-56.100.
Schempp, John Adams, Jr.: *See—*
Roy, Carl Wilson; and Schempp, John Adams, Jr., 5,701,171, Cl. 355-76.000.
Schendel, Stephen A. Bone distraction apparatus. 5,700,263, Cl. 606-57.000.
Schering Aktiengesellschaft: *See—*
Biere, Helmut; Huth, Andreas; Rahtz, Dieter; Schmiechen, Ralph; Seidelmann, Dieter; Kehr, Wolfgang; Schneider, Herbert Hans; Engelstoft, Mogens; Hansen, Bondo John; Waetjen, Frank; and Honoré , Tage, 5,700,808, Cl. 514-292.000.
Hummel-Marquardt, Heidi; Schmitz, Thomas; Kennecke, Mario; and Weber, Alfred, 5,700,666, Cl. 435-88.000.
Steinmeyer, Andreas; Neef, Gunter; Kirsch, Gerald; Schwarz, Katica; Thieroff-Ekerdt, Ruth; Wiesinger, Herbert; and Haberey, Martin, 5,700,791, Cl. 514-167.000.
Schering Corporation: *See—*
Doll, Ronald J.; and Njoroge, F. George, 5,700,806, Cl. 514-290.000.
Schwartz, Jerome, 5,700,461, Cl. 424-85.200.
Schering Corporations: *See—*
Abrams, John S.; Chretien, Isabelle; Lee, Frank D.; and Pearce, Michael K., 5,700,915, Cl. 530-413.000.
Schertz, David Michael: *See—*
Wang, James Hongxue; and Schertz, David Michael, 5,700,872, Cl. 525-187.000.
Schielke, Jörg: *See—*
Hörmann, Michael; Lupton, David Francis; Schielke, Jörg; and Schölz, Friedhold, 5,700,418, Cl. 264-604.000.
Schiesser, Robert H.: *See—*
Chuang, Strong C.; Kaufman, Kenneth; and Schiesser, Robert H., 5,699,626, Cl. 34-453.000.
Schiffler, Stefan, to Fichtel & Sachs AG. Rotary actuator. 5,700,027, Cl. 280-723.000.
Schilke, Peter William: *See—*
Manning, Michael Patrick; and Schilke, Peter William, 5,700,120, Cl. 411-389.000.
Schinazi, Raymond F.: *See—*
Liotta, Dennis C.; Schinazi, Raymond F.; and Choi, Woo-Baeg, 5,700,937, Cl. 544-317.000.
Schlegel, Andreas: *See—*
Galsterer, Wolfgang; Schlegel, Andreas; and Utz, Martin, 5,700,535, Cl. 428-40.100.
Schleimer, Friedrich; and Ameis, Dieter, to Klockner-Humboldt-Deutz AG. Method and apparatus for thermal treatment of solids. 5,700,144, Cl. 432-161.000.
Schleipen, Johannes J. H. B.: *See—*
Liedenbaum, Coen T. H. F.; Colak, Sel B.; and Schleipen, Johannes J. H. B., 5,701,396, Cl. 395-25.000.
Schlessinger, David: *See—*
Kere, Juha; Schlessinger, David; de la Chapelle, Albert; and Srivastava, Anand Kumar, 5,700,926, Cl. 536-23.100.
Schliesser, Gerhard; and Burger, Karl, to Albert Handtmann Maschinenfabrik GmbH & Co. KG. Device for making sausages. 5,699,723, Cl. 99-443.00C.
Schlumberger Industries, Inc.: *See—*
Mayell, Robert James; and Kramer, Richard Alan, 5,701,253, Cl. 364-483.000.
Schlumberger Technologies Inc.: *See—*
Ximen, Hongyu; Cecere, Michael A.; and Masnaghetti, Douglas, 5,700,526, Cl. 427-527.000.
Schlumberger Technology Corporation: *See—*
Boyle, Bruce W.; and Muller, Laurent E., 5,699,996, Cl. 254-134.400.
Schmenk, Steven R.; and Beauvais, Donald A., to Calcomp, Inc. Digitizer tablet system with dual-mode cursor/mouse. 5,701,141, Cl. 345-157.000.
Schmid, Herbert: *See—*
Derflinger, Karl; Schmid, Herbert; and Dickinger, Johann, 5,701,574, Cl. 419-26.000.
Schmidt, Peter; Heise, Wolfgang; and Lappe, Bernhard, to Siemens Nixdorf Informationssysteme Aktiengesellschaft. Document printer and a process for registering the documents by means of control markings using this document printer. 5,699,741, Cl. 101-485.000.
Schmidt, Roger Ray: *See—*
Goth, Gary Franklin; Kemink, Randall Gail; Loparco, John Joseph; and Schmidt, Roger Ray, 5,699,853, Cl. 165-104.210.

Schmiechen, Ralph: *See—*
Biere, Helmut; Huth, Andreas; Rahtz, Dieter; Schmiechen, Ralph; Seidelmann, Dieter; Kehr, Wolfgang; Schneider, Herbert Hans; Engelstoft, Mogens; Hansen, Bondo John; Waetjen, Frank; and Honoré , Tage, 5,700,808, Cl. 514-292.000.
Schmitges, Claus J.: *See—*
Osswald, Mathias; Dorsch, Dieter; Mederski, Werner; Wilm, Claudia; Schmitges, Claus J.; and Christadler, Maria, 5,700,807, Cl. 514-291.000.
Schmitt, Franz; and Nowak, Stefan, to Siemens Aktiengesellschaft. NMR gradient power supply including a resonant circuit having a frequency with an associated period being less than one-quarter duration of the gradient current. 5,701,076, Cl. 324-322.000.
Schmitthaeusler, Roland; and Bardat, Annie, to Foundation Nationale de Transfusion Sanguine. Method for decontaminating or sterilizing "in situ" a vacuum sealed container and device for implementing such method. 5,700,426, Cl. 422-29.000.
Schmitz, Stefan: *See—*
Wu, Jin Jwang; Cavaliere, William Albert; Norum, James Patrick; and Schmitz, Stefan, 5,699,679, Cl. 62-617.000.
Schmitz, Thomas: *See—*
Hummel-Marquardt, Heidi; Schmitz, Thomas; Kennecke, Mario; and Weber, Alfred, 5,700,666, Cl. 435-88.000.
Schnars, Michael John: *See—*
Lippmann, Raymond; Schnars, Michael John; Nelson, James Edward; and Chintyan, James Robert, 5,701,330, Cl. 375-257.000.
Schneider, Charles R., to Brunswick Corporation. Self-bailing watersprite with positive buoyancy. 5,699,750, Cl. 114-357.000.
Schneider, Herbert Hans: *See—*
Biere, Helmut; Huth, Andreas; Rahtz, Dieter; Schmiechen, Ralph; Seidelmann, Dieter; Kehr, Wolfgang; Schneider, Herbert Hans; Engelstoft, Mogens; Hansen, Bondo John; Waetjen, Frank; and Honoré , Tage, 5,700,808, Cl. 514-292.000.
Schneider, Palle; Conrad, Lars Sparre; Ebdrup, Søren; and Yde, Birgitte, to Novo Nordisk A/S. Enhancement of enzyme reactions. 5,700,769, Cl. 510-305.000.
Schnorrenberg, Gerd; Esser, Franz; Dollinger, Horst; Jung, Birgit; Speck, Georg; and Burger, Erich, to Boehringer Ingelheim GmbH. Amino acid derivatives, processes for the manufacture thereof and pharmaceutical compositions (II) containing these compounds. 5,700,827, Cl. 514-414.000.
Schoedinger, Kevin Dean: *See—*
Portig, Harald; Schoedinger, Kevin Dean; Seman, Richard Andrew, Jr.; and Wright, Phillip Byron, 5,701,549, Cl. 399-36.000.
Schoettlin, Warren E.: *See—*
Mathur, Eric J.; Marsh, Edward J.; and Schoettlin, Warren E., 5,700,672, Cl. 435-183.000.
Schofield, John David: *See—*
Thetford, Dean; and Schofield, John David, 5,700,395, Cl. 252-309.000.
Schohe-Loop, Rudolf: *See—*
Mittendorf, Joachim; Fey, Peter; Junge, Bodo; Kaulen, Johannes; Laak, Kai van; Meier, Heinrich; and Schohe-Loop, Rudolf, 5,700,948, Cl. 548-531.000.
Schölz, Friedhold: *See—*
Hörmann, Michael; Lupton, David Francis; Schielke, Jörg; and Schölz, Friedhold, 5,700,418, Cl. 264-604.000.
Schöppe, Günter, to Carl Zeiss JENA GmbH. Confocal incident light microscope. 5,701,198, Cl. 359-386.000.
Schroepfer, Richard C.: *See—*
Korsunsky, Iosif; Grabbe, Dimitry; and Schroepfer, Richard C., 5,700,151, Cl. 439-74.000.
Schuchman, Leonard; and Bruno, Ronald, to Stanford Telecommunications, Inc. Chirped spread spectrum positioning system. 5,701,328, Cl. 375-204.000.
Schuhmacher, Rudolf; Dralle-Voss, Gabriele; Oppenlaender, Knut; Wegner, Brigitte; and Hohmann, Andreas, to BASF Aktiengesellschaft. Antifoams based on oil-in-water emulsions for the paper industry. 5,700,351, Cl. 162-75.000.
Schultz, Mark H., to Onan Corporation. Electrical generator damage protection apparatus and method with circuit breaker trip initiation. 5,701,070, Cl. 322-37.000.
Schum, Gary W.: *See—*
Anderson, Charles C.; Steinwachs, Lawrence J.; and Schum, Gary W., 5,700,623, Cl. 430-256.000.
Schumacher, Philip P.; and Cummins, James C., to Cooper Industries, Inc. Method of improving fault current measurement accuracy on electronic reclosure control. 5,701,080, Cl. 324-539.000.
Schumann, Wolfgang: *See—*
Herwegh, Felix; Weide, Nils Holger; and Schumann, Wolfgang, 5,700,491, Cl. 425-72.200.
Schunter, Christine K. Child's waistbelt and leash for protection against abduction of a child. 5,699,555, Cl. 2-1.000.
Schwalke, Udo, to Siemens Aktiengesellschaft. Method for manufacturing an insulating trench in an SOI substrate for smartpower technologies. 5,700,712, Cl. 437-62.000.
Schwartz, Arthur G.; and Lewbart, Marvin Louis, to Research Corporation Technologies, Inc. Steroids useful as anti-cancer and anti-obesity agents. 5,700,793, Cl. 514-177.000.
Schwartz, Donna Pruess: *See—*
Hirth, Klaus Peter; Schwartz, Donna Pruess; Mann, Elaina; Shawver, Laura Kay; Keri, Gyorgi; Szekely, Istvan; Bajor, Tamas; Haimichael, Janis; Orfi, Laszlo; Levitzki, Alex; Gazit, Aviv; Ullrich, Axel; Lammers, Reiner; Kabbinavar, Fairooz F.; Slamon, Dennis; and Tang, Peng Cho, 5,700,822, Cl. 514-380.000.
Hirth, Klaus Peter; Schwartz, Donna Pruess; Mann, Elaine; Shawver, Laura Kay; Kéri, György; Székely, István; Bajor, Tamás; Haimichael, Janis; Orfi, László; Levitzki, Alex; Gazit, Aviv; Ullrich, Axel; and Lammers, Reiner, 5,700,823, Cl. 514-380.000.
Schwartz, Jerome, to Schering Corporation. Method for inhibiting HIV replication using IL-4. 5,700,461, Cl. 424-85.200.
Schwarz, Karl E.: *See—*
Myers, David J.; Lewis, James D.; House, Wayne D.; and Schwarz, Karl E., 5,700,285, Cl. 623-1.000.
Schwarz, Katica: *See—*
Steinmeyer, Andreas; Neef, Gunter; Kirsch, Gerald; Schwarz, Katica; Thieroff-Ekerdt, Ruth; Wiesinger, Herbert; and Haberey, Martin, 5,700,791, Cl. 514-167.000.
Schwarzer, Norbert: *See—*
Hund, Kerstin; Klein, Werner; Kördel, Werner; Görtz, Theo; and Schwarzer, Norbert, 5,700,109, Cl. 405-128.000.
Schwarz-Zöbrer, Sabine. Combined bed and seat device for an infant. 5,699,569, Cl. 5-655.000.
Schweiger, Barry: *See—*
Neiser, Gabe; Simon, Theodore; and Schweiger, Barry, 5,700,158, Cl. 439-501.000.
Schweiger, Werner J.: *See—*
Gelbien, Lawrence J.; Andreas, Philip B.; and Schweiger, Werner J., 5,701,226, Cl. 361-63.000.
Schwelling, Hermann. Method of manually tying bales in waste material presses. 5,699,727, Cl. 100-3.000.
Schwertmann, Thomas: *See—*
Kienow, Ekkehard; Moran, Bernd; Schwertmann, Thomas; and Hoberg, Heinz, 5,700,441, Cl. 423-244.070.
Science Incorporated: *See—*
Kriesel, Marshall S., 5,700,244, Cl. 604-132.000.
Scott, Ann M.: *See—*
Biegajski, James E.; Venkatraman, Subbu S.; and Scott, Ann M., 5,700,478, Cl. 424-434.000.
Scott, James D.: *See—*
Schaefer, Roger W.; Capanna, Michael; and Scott, James D., 5,699,943, Cl. 224-197.000.
Scott, James J.: *See—*
Castle, Brian R.; Scott, James J.; and Oldsen, John G., 5,699,572, Cl. 7-138.000.
Scott, Loren W.; and Kulberg, Kurt, to Hunter Industries, Inc. Automatic engagement nozzle. 5,699,962, Cl. 239-73.000.
Scott, Steven L.: *See—*
Thorson, Gregory M.; and Scott, Steven L., 5,701,416, Cl. 395-200.150.
SDL, Inc.: *See—*
Oleskevich, Tanya, 5,701,373, Cl. 385-33.000.
Seach, Eugene. Holder for eyeglasses. 5,699,990, Cl. 248-309.100.
Seagate Technology, Inc.: *See—*
Amin, Nurul; Bortins, John; and Yan, Ying, 5,699,605, Cl. 29-603.140.
Boutaghou, Zine-Eddine, 5,701,218, Cl. 360-104.000.
Duncan, Kathleen Anne, 5,701,450, Cl. 395-595.000.
Seco Tools AB: *See—*
Ruppi, Sakari, 5,700,569, Cl. 428-336.000.
Segerson, Judith A.: *See—*
Minick, Steven E.; Segerson, Judith A.; and Rednour, William C., 5,700,257, Cl. 604-408.000.
SEH America, Inc.: *See—*
Johnson, Roy P.; and Wilkinson, Donald L., 5,700,190, Cl. 454-57.000.
Seidelmann, Dieter: *See—*
Biere, Helmut; Huth, Andreas; Rahtz, Dieter; Schmiechen, Ralph; Seidelmann, Dieter; Kehr, Wolfgang; Schneider, Herbert Hans; Engelstoft, Mogens; Hansen, Bondo John; Waetjen, Frank; and Honoré , Tage, 5,700,808, Cl. 514-292.000.
Seiko Epson Corporation: *See—*
Kobayashi, Yoichi; and Komuro, Kiyoto, 5,700,099, Cl. 400-625.000.
Tanaka, Hiroshi; Fujita, Toru; and Ishiwatari, Tahei, 5,701,554, Cl. 399-49.000.
Yokouchi, Hideya, 5,701,217, Cl. 360-99.050.
Seiko Precision Inc.: *See—*
Akimoto, Kazuo; and Imano, Seiichi, 5,701,537, Cl. 396-463.000.
Seilhamer, Jeffrey J.: *See—*
Hawkins, Phillip R.; Wilde, Craig G.; and Seilhamer, Jeffrey J., 5,700,912, Cl. 530-350.000.
Seitz, Ansgar: *See—*
Kleppner, Stephan; and Seitz, Ansgar, 5,699,773, Cl. 123-510.000.
Seitzer, Dieter: *See—*
Herre, Jürgen; Grill, Berhard; Eberlein, Ernst; Brandenburg, Karlheinz; and Seitzer, Dieter, 5,701,346, Cl. 381-18.000.
Seki, Mika: *See—*
Iwata, Masuo; Seki, Mika; Inoue, Kouji; Takahashi, Ryoji; Fukumura, Tikashi; and Tanaka, Masaya, 5,700,575, Cl. 428-403.000.
Sekijima, Takenori: *See—*
Fujii, Takashi; Shinmura, Satoru; Fujino, Masaru; Mizuno, Shinobu; Sekijima, Takenori; Chikagawa, Osamu; and Takagi, Hiroshi, 5,701,108, Cl. 333-202.000.

- Sekiya, Harukazu; Saito, Jun; Isoda, Yuzo; Uchida, Yasuhiro; Izumi, Makoto; and Kuwata, Takashi, to Canon Kabushiki Kaisha. Sheet feeding apparatus with suspended sheet carrying device and image forming apparatus. 5,700,006, Cl. 271-241.000.
- Seliger, Heinz-Hartmut; Berner, Sibylle; Mühlegger, Klaus; Von der Eltz, Herbert; and Batz, Hans-Georg, to Boehringer Mannhiem GmbH. Modified phosphoramidite process for the production of modified nucleic acids. 5,700,919, Cl. 536-22.100.
- Sella, Giovanni, to Essetre di Sella Giovanni. Machine tool for machining panels and plates. 5,700,117, Cl. 409-164.000.
- Selnick, Harold G.: *See—*
  - Claremon, David A.; Liverton, Nigel; and Selnick, Harold G., 5,700,797, Cl. 514-221.000.
- Seman, Richard Andrew, Jr.: *See—*
  - Portig, Harald; Schoedinger, Kevin Dean; Seman, Richard Andrew, Jr.; and Wright, Phillip Byron, 5,701,549, Cl. 399-36.000.
- Semiconductor Energy Laboratory Co., Ltd.: *See—*
  - Yamazaki, Shunpei; and Arai, Yasuyuki, 5,700,333, Cl. 136-258.000.
  - Yamazaki, Shunpei, 5,701,167, Cl. 349-42.000.
- Semrád, Petr: *See—*
  - Špindler, Zdeněk; Novotný , Vojtěch; and Semrád, Petr, 5,699,971, Cl. 243-35.606.
- Sen, Bidyut: *See—*
  - Liou, Jiunn-Yau; Wheeler, Richard L.; Sen, Bidyut; and Parker, James C., Jr., 5,701,071, Cl. 323-220.000.
- Senju Pharmaceutical Co., Ltd.: *See—*
  - Ogata, Kazumi; Sakane, Takahiro; and Sameshima, Shogo, 5,700,789, Cl. 514-100.000.
- Sens, Rüdiger; Reichelt, Helmut; and Saling, Peter, to BASF Aktiengesellschaft. Triazolopyridine dyes and intermediates therefor. 5,700,757, Cl. 503-227.000.
- Seol, Young-yun, to Samsung Electronics Co., Ltd. Tape cassette loading apparatus of tape recorder including a spring member for biasing a cassette towards reel tables. 5,701,215, Cl. 360-96.500.
- Seong, Pyong-yong, to Samsung Electronics Co., Ltd. Optical pickup device with light spot size adjustment for different density disks. 5,701,288, Cl. 369-112.000.
- Seppälnen, Tapio, to Cimcorp Oy. Connecting device in a paint toning machine. 5,699,831, Cl. 137-614.030.
- Seratek LLC: *See—*
  - Corrado, Frank C.; Fischer, James W.; Larsen, Gary R.; and Sweet, Ronald W., 5,699,738, Cl. 101-425.000.
- Sercomp Corporation: *See—*
  - Sakamoto, Masahiko, 5,699,936, Cl. 222-107.000.
- Serole, Bernard, to W.C. Heraeus GmbH. Method of producing a ceramic component by sintering. 5,700,408, Cl. 264-65.000.
- Servi, Stefano: *See—*
  - De Ferra, Lorenzo; Massardo, Pietro; Piccolo, Oreste; and Servi, Stefano, 5,700,668, Cl. 435-106.000.
- Setoyama, Makoto: *See—*
  - Kukino, Satoru; Nakai, Tetsuo; Goto, Mitsuhiro; Yoshioka, Takashi; and Setoyama, Makoto, 5,700,551, Cl. 428-212.000.
- Seward, James Bernard; and Tajik, Abdul Jamil, to Mayo Foundation for Medical Education and Research. Longitudinal multiplane ultrasound transducer underfluid catheter system. 5,699,805, Cl. 128-662.060.
- Sextant Avionique: *See—*
  - Pitot, Christian; and Michel, Martinez, 5,701,315, Cl. 371-51.100.
- Sexton, Earl H., III: *See—*
  - Korney, Arthur F., Jr.; Sexton, Earl H., III; and Young, Winnie, 5,700,578, Cl. 428-421.000.
- SGS-Thomson Microelectronics, Inc.: *See—*
  - Cameron, Scott Warren; and de La Soujeole, Axel Alegre, 5,701,213, Cl. 360-66.000.
  - McClure, David Charles, 5,701,275, Cl. 365-233.000.
- SGS-Thomson Microelectronics S.A.: *See—*
  - Decrouez, Christelle, 5,701,332, Cl. 375-334.000.
- SGS-Thomson Microelectronics S.r.l.: *See—*
  - Calligaro, Cristiano; Daniele, Vincenzo; Gastaldi, Roberto; Manstretta, Alessandro; and Torelli, Guido, 5,701,265, Cl. 365-185.030.
- Shackle, Dale: *See—*
  - Jensen, Gert; and Shackle, Dale, 5,700,300, Cl. 29-623.500.
- Shade-O-Matic Limited: *See—*
  - Marocco, Norbert, 5,699,637, Cl. 52-204.530.
- Shafe' , Mathew Kayhan, to International Business Machines. Spacer for providing support and a transducer parking structure in a disk drive assembly. 5,701,219, Cl. 360-105.000.
- Shaffer, Randy: *See—*
  - Mills, Shannon E.; Shaffer, Randy; Freeman, Michael T.; Plamondon, Thomas J.; and Oakes, Barry L., Jr., 5,700,147, Cl. 433-98.000.
- Shafir, Haim, to Level One Communications, Inc. Transconductor-C filter element with coarse and fine adjustment. 5,701,099, Cl. 327-552.000.
- Shah, Milan: *See—*
  - Whitney, Alan; Neeman, Yuval; Koneru, Sudheer; Shah, Milan; Cook, Peter J.; and Miller, Arnold S., 5,701,462, Cl. 395-610.000.
- Shaler, Thomas Andrew: *See—*
  - Monforte, Joseph Albert; Becker, Christopher Hank; Shaler, Thomas Andrew; and Pollart, Daniel Joseph, 5,700,642, Cl. 435-6.000.
- Sharan, Sujit; and Nagabushnam, Varatharajan, to Micron Technology, Inc. Method for forming low contact resistance contacts, vias, and plugs with diffusion barriers. 5,700,716, Cl. 437-190.000.
- Sharp Kabushiki Kaisha: *See—*
  - Kobayashi, Shinji; and Inoue, Masashi, 5,700,606, Cl. 430-5.000.
  - Kubo, Masumi; Akebi, Yasunobu; and Yamashita, Toshihiro, 5,701,165, Cl. 349-5.000.
  - Teraguchi, Nobuaki, 5,701,035, Cl. 257-747.000.
  - Tomooka, Yutaka; and Oka, Yasuhiro, 5,699,585, Cl. 15-327.200.
- Sharpe, Claude Andrew, to Texas Instruments Incorporated. Automatic vehicle identification system capable of vehicle lane discrimination. 5,701,127, Cl. 342-42.000.
- Shaw, H. John: *See—*
  - Digonnet, Michel J. F.; Falquier, Dario G.; Wagener, Jefferson L.; and Shaw, H. John, 5,701,318, Cl. 372-6.000.
- Shaw, Jane Margaret: *See—*
  - Angelopoulos, Marie; Brusic, Vlasta A.; Graham, Teresita Ordonez; Purushothaman, Sampath; Saraf, Ravi F.; Shaw, Jane Margaret; Roldan, Judith Marie; and Viehbeck, Alfred, 5,700,398, Cl. 252-500.000.
- Shaw, John Richardson: *See—*
  - Collins, Mark Anthony David; Chicarelli-Robinson, Maria Ines; Bryans, Justin Stephen; Brocchini, Stephen James; Latham, Christopher John; and Shaw, John Richardson, 5,700,804, Cl. 514-255.000.
- Shaw, Leonard L.: *See—*
  - McGrath, Stephen F.; and Shaw, Leonard L., 5,699,981, Cl. 244-1.00N.
- Shawver, Laura Kay: *See—*
  - Hirth, Klaus Peter; Schwartz, Donna Pruess; Mann, Elaina; Shawver, Laura Kay; Keri, Gyorgi; Szekely, Istvan; Bajor, Tamas; Haimichael, Janis; Orfi, Laszlo; Levitzki, Alex; Gazit, Aviv; Ullrich, Axel; Lammers, Reiner; Kabbinavar, Fairooz F.; Slamon, Dennis; and Tang, Peng Cho, 5,700,822, Cl. 514-380.000.
  - Hirth, Klaus Peter; Schwartz, Donna Pruess; Mann, Elaina; Shawver, Laura Kay; Kéri, György; Székely, István; Bajor, Tamás; Haimichael, Janis; Orfi, László; Levitzki, Alex; Gazit, Aviv; Ullrich, Axel; and Lammers, Reiner, 5,700,823, Cl. 514-380.000.
- Shears, Terry S.: *See—*
  - Channell, Alan B.; and Shears, Terry S., 5,699,930, Cl. 220-465.000.
- Sheiness, Diana K.; Adams, Trevor H.; Stamm, Michael R.; Cangelosi, Gerard A.; Britschgi, Theresa B.; and Dix, Connie K., to Becton Dickinson and Company. Methods for selectively detecting microorganisms associated with vaginal infections in complex biological samples. 5,700,636, Cl. 435-6.000.
- Sheldrup, Ronald: *See—*
  - Leyen, Thomas; Sheldrup, Ronald; Burks, Warren; and Macias, Moises, 5,701,338, Cl. 379-58.000.
- Shelton, Teriy: *See—*
  - Powers, John; Shelton, Teriy; and Gonseth, Michael, 5,701,170, Cl. 355-40.000.
- Shennib, Adnan; and Urso, Richard, to Decibel Instruments, Inc. Articulated hearing device. 5,701,348, Cl. 381-68.600.
- Sherman, Michael I.: *See—*
  - Beaudry, Gary A.; Bertelsen, Arthur H.; Sherman, Michael I.; and Vogelstein, Bert, 5,700,657, Cl. 435-69.100.
- Sherman, William G., II: *See—*
  - Legvold, Vernon J.; Liu, Julia; Michod, Carol S.; Ng, Chan Yiu; Sherman, William G., II; Steffan, Jeffrey R.; and Van Gundy, Steven R., 5,701,429, Cl. 395-441.000.
- Sheu, Min-Shyan; and Loh, Ih-Houng, to Advanced Surface Technology. Durable hydrophilic surface coatings. 5,700,559, Cl. 428-319.700.
- Shi, Hang; Barker, Jeremy; and Koksbang, Rene, to Valence Technology, Inc. Carbon anode for lithium ion electrochemical cell. 5,700,298, Cl. 29-623.100.
- Shiau, David Wen-I; Detlefsen, William David; and Phillips, Earl Kay, to Borden Chemical, Inc. Resorcinol-glutaraldehyde resin as an accelerator for curing phenol-formaldehyde resins. 5,700,587, Cl. 428-528.000.
- Shiban, Samir S., to Innovative Engineering Solutions, Inc. Hazardous gas mixing apparatus with rake for dislodging conduit deposits. 5,699,826, Cl. 137-244.000.
- Shibata, Akinao, to Isuzu Motors Limited. Body stopper structure of a car. 5,700,049, Cl. 296-188.000.
- Shibata, Jun: *See—*
  - Ueda, Tetsuya; Shibata, Jun; and Yama, Yomiyuki, 5,701,033, Cl. 257-704.000.
- Shibata, Makoto; and Takahashi, Masao, to Taiho Kogyo Co., Ltd. Sliding bearing. 5,700,547, Cl. 428-167.000.
- Shibata, Naoki: *See—*
  - Yamazaki, Shiro; Shibata, Naoki; and Koike, Masayoshi, 5,700,713, Cl. 437-129.000.
- Shibata, Yasuhiro: *See—*
  - Sho, Katsuhiko; Shibata, Yasuhiro; Ishii, Keizou; Imamura, Tsuyoshi; and Takeuchi, Kunihiko, 5,700,862, Cl. 524-403.000.
- Shibata, Yuki: *See—*
  - Shinojima, Satoshi; Suetsugu, Masaru; Morikawa, Yoshihiro; Shibata, Yuki; and Kaku, Rumiko, 5,700,784, Cl. 514-24.000.
- Shibayama, Takayuki: *See—*
  - Hiramatsu, Nobutaka; Sugita, Mitsuru; Mizuno, Yoshikazu; and Shibayama, Takayuki, 5,700,093, Cl. 384-276.000.
- Shibazaki, Masaki; Ido, Mikiya; and Watanabe, Tohru, to Pilot Ink Co., Ltd., The. Coloring fluid-containing marking device made of biodegradable plastic resin. 5,700,534, Cl. 428-36.920.
- Shibuya, Isao: *See—*
  - Taguchi, Yoichi; Oishi, Akihiro; Shibuya, Isao; and Tsuchiya, Tohru, 5,700,931, Cl. 540-203.000.
- Shieh, Frank. Golf training device. 5,700,203, Cl. 473-139.000.

- Shieh, Pi-Chen: *See—*
  - Shiue, Ruey-Yun; Wu, Wen-Teng; Shieh, Pi-Chen; and Liu, Chin-Kai, 5,700,735, Cl. 438-612.000.
- Shields, James E.: *See—*
  - Chance, Ronald E.; DiMarchi, Richard D.; Frank, Bruce H.; and Shields, James E., 5,700,662, Cl. 435-69.400.
- Shiflett, Mark Brandon; and Yokozeki, Akimichi, to Du Pont de Nemours, E. I., and Company. Azeotropic or azeotrope-like compositions of ammonia and tetrafluoroethane. 5,700,388, Cl. 252-67.000.
- Shigematsu, Masayuki; and Koyano, Yasushi, to Sumitomo Electric Industries, Ltd. Chromatic dispersion compensator and chromatic dispersion compensating optical communication system. 5,701,188, Cl. 359-161.000.
- Shigematsu, Yuji: *See—*
  - Kanda, Yuji; Kokubo, Toshiyuki; Sato, Yufu; Sasaki, Toshio; Shiraishi, Hiroyuki; and Shigematsu, Yuji, 5,700,895, Cl. 526-348.000.
- Shigeta, Kunio: *See—*
  - Endo, Isao; Komatsu, Toru; Sato, Yotaro; Nomori, Hiroyuki; Shigeta, Kunio; and Onodera, Masahiro, 5,701,553, Cl. 399-55.000.
- Shih, Da-Yuan: *See—*
  - Hedrick, Jeffrey Curtis; Hedrick, James Lupton; Liao, Yun-Hsin; Miller, Robert Dennis; and Shih, Da-Yuan, 5,700,844, Cl. 521-77.000.
- Shikakubo, Tsutomu: *See—*
  - Uyama, Haruo; Harada, Takahiro; Kano, Mitsuru; Matsudaira, Nagahisa; Hoshino, Kazuhisa; Kitamura, Satoshi; Noguchi, Fuminobu; and Shikakubo, Tsutomu, 5,700,550, Cl. 428-212.000.
- Shima, Masaki; and Terada, Norihiro, to Sanyo Electric Co. Ltd. Amorphous silicon carbide film and photovoltaic device using the same. 5,700,467, Cl. 136-249.000.
- Shimada, Toshiaki: *See—*
  - Ohira, Hideo; Murakami, Tokumichi; Asai, Kohtaro; and Shimada, Toshiaki, 5,701,158, Cl. 348-410.000.
  - Ohira, Hideo; Murakami, Tokumichi; Asai, Kohtaro; and Shimada, Toshiaki, 5,701,159, Cl. 348-410.000.
- Shimada, Toshiyuki: *See—*
  - Deguchi, Hironori; and Shimada, Toshiyuki, 5,701,310, Cl. 371-30.000.
- Shimada, Yuzo; Suyama, Takayuki; Tanaka, Yoshimasa; and Hasegawa, Shinichi, to NEC Corporation. Process for connecting electronic devices. 5,699,610, Cl. 29-840.000.
- Shimano, Inc.: *See—*
  - Nagano, Masashi, 5,699,699, Cl. 74-594.600.
- Shimasaki, Yuuji; Kanbe, Hideyuki; and Kurusu, Akira, to Nippon Shokubai Co., Ltd. Process for production of N-vinyl compound. 5,700,946, Cl. 548-231.000.
- Shimauchi, Keisuke: *See—*
  - Hayashi, Bunya; and Shimauchi, Keisuke, 5,699,830, Cl. 137-554.000.
- Shimazaki, Hiromitsu: *See—*
  - Itou, Toshifumi; Shimazaki, Hiromitsu; Arita, Masaaki; and Horinouchi, Shougo, 5,701,129, Cl. 343-873.000.
- Shimizu, Shigeru; Saitoh, Takashi; Uzawa, Masashi; and Takayanagi, Yasuyuki, to Nitto Chemical Industry Co., Ltd. Soluble alkoxy-group substituted aminobenzenesulfonic acid aniline conducting polymers. 5,700,399, Cl. 252-500.000.
- Shimizu, Takao; and Horio, Hirotsugu, to Daido Steel Co., Ltd. Method of bonding Ti-alloy members. 5,699,955, Cl. 228-194.000.
- Shimizu, Takashi: *See—*
  - Takeichi, Hideo; Ozawa, Yoichi; Aoki, Sei; and Shimizu, Takashi, 5,700,874, Cl. 525-288.000.
- Shimizu, Toshikazu: *See—*
  - Urawa, Yoshio; Furukawa, Ken; Shimizu, Toshikazu; Yamagishi, Yoji; Tsurugi, Tomio; and Ichino, Tomio, 5,700,938, Cl. 546-14.000.
- Shimoda, Hiromi, to NEC Corporation. Frequency control apparatus for base station in satellite communication system. 5,701,602, Cl. 455-260.000.
- Shimogama, Hironori: *See—*
  - Nogami, Tadahiko; Nakamura, Ichiro; Hiraku, Kenji; Sadamori, Hiroyuki; Yasuda, Kenichi; Narita, Kenjiro; Horii, Kenji; and Shimogama, Hironori, 5,699,693, Cl. 72-199.000.
- Shimojo, Shigeru: *See—*
  - Fujii, Masumi; Suda, Taiichiro; Hotta, Yoshitsugu; Kitamura, Koichi; Jinno, Yukihiro; Mimura, Tomio; Shimojo, Shigeru; Iijima, Masaki; and Mitsuoka, Shigeaki, 5,700,437, Cl. 423-220.000.
- Shimomura, Haruyuki; and Narukawa, Toshiki, to Brother Kogyo Kabushiki Kaisha. Parallel interface circuit having a n-byte buffer and tansmitting the n byte data on a byte-by-byte basis in response to interrupt request signal. 5,701,546, Cl. 395-849.000.
- Shimono, Muchiji, to YKK Corporation. Concealed woven slide fastener. 5,699,592, Cl. 24-432.000.
- Shimoyama, Koji: *See—*
  - Okuyama, Kojiro; Shimoyama, Koji; Kawashima, Syunichiro; and Kugimiya, Koichi, 5,700,745, Cl. 501-134.000.
- Shin-Etsu Chemical Co., Ltd.: *See—*
  - Aoki, Shunji; Ohba, Toshio; Hara, Yasuaki; and Itoh, Kunio, 5,700,899, Cl. 528-37.000.
  - Kokubo, Hiroyasu; and Minemura, Katsuyoshi, 5,700,929, Cl. 536-63.000.
  - Yoshida, Takeo; Azechi, Syuuichi; and Shiobara, Toshio, 5,700,853, Cl. 523-212.000.
- Shin-Etsu Handotai Co., Ltd: *See—*
  - Fujimaki, Nobuyoshi, 5,701,088, Cl. 324-765.000.
  - Hasegawa, Fumihiko; Kobayashi, Makoto; and Hirano, Tameyoshi, 5,700,179, Cl. 451-41.000.
  - Toyama, Kouhei, 5,699,782, Cl. 125-21.000.
- Shin, Hank Hukyoo; Tracy, Clarence J.; Duffin, Robert L.; Freeman, John L., Jr.; Grivna, Gordon; and Wilson, Syd R., to Motorola, Inc. Structure and method for metallization of semiconductor devices. 5,700,721, Cl. 437-199.000.
- Shin, Jong-Sub: *See—*
  - Lee, Hae-Don; and Shin, Jong-Sub, 5,700,996, Cl. 219-626.000.
- Shingae, Shigeru: *See—*
  - Iwanaga, Shin-ichiro; Shingae, Shigeru; Morita, Takasi; Ishikawa, Osamu; and Nojima, Norichika, 5,700,852, Cl. 523-201.000.
- Shingu, Hideo: *See—*
  - Taguchi, Kohei; Ayada, Michihiko; and Shingu, Hideo, 5,701,575, Cl. 419-28.000.
- Shini, Masami: *See—*
  - Katsuro, Noboru; Suemoto, Toshiro; Mizutani, Yoshihiro; and Shini, Masami, 5,700,552, Cl. 428-214.000.
- Shinmura, Satoru: *See—*
  - Fujii, Takashi; Shinmura, Satoru; Fujino, Masaru; Mizuno, Shinobu; Sekijima, Takenori; Chikagawa, Osamu; and Takagi, Hiroshi, 5,701,108, Cl. 333-202.000.
- Shinogi, Norikazu: *See—*
  - Ishikawa, Hiroki; Kenmochi, Yasuhiko; Bando, Takeshi; Hayashi, Masaho; and Shinogi, Norikazu, 5,699,912, Cl. 206-494.000.
- Shinohara, Takao, to NEC Corporation. Partition wall structure for plasma display panel. 5,701,056, Cl. 313-584.000.
- Shinojima, Satoshi; Suetsugu, Masaru; Morikawa, Yoshihiro; Shibata, Yuki; and Kaku, Rumiko, to Shiseido Co., Ltd. External preparation for skin. 5,700,784, Cl. 514-24.000.
- Shinozaki, Shimpei: *See—*
  - Yamamoto, Hiroshi; Takishima, Suguru; and Shinozaki, Shimpei, 5,701,216, Cl. 360-99.020.
- Shinwa Plant Kikou Co., Ltd.: *See—*
  - Isaji, Kazutoshi, 5,699,969, Cl. 241-24.120.
- Shiobara, Toshio: *See—*
  - Yoshida, Takeo; Azechi, Syuuichi; and Shiobara, Toshio, 5,700,853, Cl. 523-212.000.
- Shiomitsu, Tohru; Manabe, Yasuhiko; Ogawa, Takashi; Takita, Yusaku; and Ishihara, Tatsumi, to NKK Corporation; and Takita, Yusaku. Method for manufacturing thin zirconia film. 5,700,361, Cl. 204-491.000.
- Shiotani, Keiichi: *See—*
  - Watanabe, Hideo; Boh, Satoru; Miyata, Akira; and Shiotani, Keiichi, 5,701,403, Cl. 395-119.000.
- Shipe, Gary, to Philips Electronic North America Corporation. Hermetically sealed package for a high power hybrid circuit. 5,700,724, Cl. 437-215.000.
- Shipley Company, L.L.C.: *See—*
  - Thackeray, James W.; Sinta, Roger F.; Denison, Mark D.; and Ablaza, Sheri L., 5,700,624, Cl. 430-270.100.
- Shiraishi, Hiroyuki: *See—*
  - Kanda, Yuji; Kokubo, Toshiyuki; Sato, Yufu; Sasaki, Toshio; Shiraishi, Hiroyuki; and Shigematsu, Yuji, 5,700,895, Cl. 526-348.000.
- Shiralagi, Kumar: *See—*
  - Huang, Jenn-Hwa; Thero, Christine; and Shiralagi, Kumar, 5,700,703, Cl. 437-40.000.
- Shirasaki, Masataka, to Fujitsu Limited. Polarized-wave-dispersion- preventive optical fiber and its manufacturing method. 5,701,376, Cl. 385-123.000.
- Shirota, Katsuhiro: *See—*
  - Kurbayashi, Yutaka; Shirota, Katsuhiro; and Takahashi, Katsuhiko, 5,700,314, Cl. 106-31.270.
- Shiseido Co., Ltd.: *See—*
  - Shinojima, Satoshi; Suetsugu, Masaru; Morikawa, Yoshihiro; Shibata, Yuki; and Kaku, Rumiko, 5,700,784, Cl. 514-24.000.
- Shiue, Ruey-Yun; Wu, Wen-Teng; Shieh, Pi-Chen; and Liu, Chin-Kai, to Taiwan Semiconductor Manufacturing Company, Ltd. Method of forming bond pad structure for the via plug process. 5,700,735, Cl. 438-612.000.
- Sho, Katsuhiko; Shibata, Yasuhiro; Ishii, Keizou; Imamura, Tsuyoshi; and Takeuchi, Kunihiko, to Nippon Paint Co., Ltd. Aqueous coating composition. 5,700,862, Cl. 524-403.000.
- Shoei Printing Co., Ltd.: *See—*
  - Oishi, Tadahiro; Onishi, Toshifumi; and Yoshioka, Yasuo, 5,701,002, Cl. 235-487.000.
- Shonan Gosei-Jushi Seisakusho K.K.: *See—*
  - Kamiyama, Takao; and Yokoshima, Yasuhiro, 5,700,110, Cl. 405-154.000.
- Shoshi, Masayuki: *See—*
  - Kawahara, Megumi; Yamada, Ikuko; Shoshi, Masayuki; and Kojima, Akio, 5,700,614, Cl. 430-59.000.
- Showalter, Dan J., to Borg-Warner Automotive, Inc. Modulating clutch having passive torque throughout threshold. 5,699,888, Cl. 192-35.000.
- Shrader, Warren E.: *See—*
  - Baker, Jeffrey Clayton; Moser, Brian A.; and Shrader, Warren E., 5,700,904, Cl. 530-305.000.
- Shrivastava, Ritu; and Reddy, Chitranjan N., to Alliance Semiconductor Corporation. Dynamic random access memory cell having increased capacitance. 5,701,264, Cl. 365-149.000.
- Shutic, Jeff: *See—*
  - Koch, Dean; and Shutic, Jeff, 5,700,323, Cl. 118-308.000.
- Shyr, Duen-Jyh; and Chen, Kuan-Chou, to Industrial Technology Research Institute. Chain type transfer device. 5,699,892, Cl. 198-370.090.
- Sibbet, Donald Dale. Powered circular saw retention apparatus for retractable saw blade guard. 5,699,705, Cl. 83-13.000.
- Sibold, Jack D.: *See—*

Ritland, Marcus A.; Readey, Dennis W.; Kleiner, Richard N.; and Sibold, Jack D., 5,700,373, Cl. 210-323.200.
Siddiqui, Shahid A.; Ziecker, Roger A.; Wagner, Karen M.; and Nassar, Jocelyne, to Nordson Corporation. Molten thermoplastic material supply system with removable drive assembly. 5,699,938, Cl. 222-146.500.
Siddiqui, Shahid A., to Automotive Systems Laboratory, Inc. Gas inflator having aluminum bead filter. 5,700,973, Cl. 102-530.000.
Siebels, Randy Luther: *See*—
Scheel, Jerry Lynn; and Siebels, Randy Luther, 5,701,110, Cl. 335-132.000.
Siefert, David M., to NCR Corporation. Computer generated structure. 5,701,452, Cl. 395-601.000.
Siegmund, Horst: *See*—
Kammerer, Eric; Biering, Lothar; Grohs, Erhard; Groht, Klaus; Reynvaan, Conrad; Siegmund, Horst; Spangenberg, Jorgen; and Uecker, Arwed, 5,701,046, Cl. 310-251.000.
Siemens Aktiengesellschaft: *See*—
Berthold, Thomas, 5,700,404, Cl. 264-1.210.
Biebl, Markus, 5,700,379, Cl. 216-2.000.
Duerr, Wilhelm, 5,699,802, Cl. 128-653.500.
Emshoff, Horst-Werner; Intichar, Lutz; and Scheil, Hermann, 5,701,044, Cl. 310-54.000.
Flohr, Thomas, 5,701,360, Cl. 382-131.000.
Hahn, Karl-Heinz; and Saisila, Chartchai, 5,700,976, Cl. 174-58.000.
Heide, Patric, 5,701,104, Cl. 331-96.000.
Heywang-Koebrunner, Sylvia, 5,699,800, Cl. 128-653.200.
Kürten, Heribert; Radtke, Uwe; Taube, Wolfgang; and Vollmar, Horst, 5,699,666, Cl. 60-652.000.
Kahlbau, Lutz, 5,699,899, Cl. 200-302.100.
Kellner, Walter-Ulrich; Küsters, Karl-Heinz; Müller, Wolfgang; and Stelz, Franz-Xaver, 5,701,022, Cl. 257-300.000.
Klose, Helmut; Biebl, Markus; Scheiter, Thomas; and Hierold, Christofer, 5,700,702, Cl. 437-34.000.
Rattner, Manfred, 5,699,804, Cl. 128-660.030.
Schmitt, Franz; and Nowak, Stefan, 5,701,076, Cl. 324-322.000.
Schwalke, Udo, 5,700,712, Cl. 437-62.000.
Splett, Armin, 5,700,382, Cl. 216-24.000.
Weber, Werner; Kuehn, Stefan; Kleiner, Michael; and Thewes, Roland, 5,701,037, Cl. 257-777.000.
Weidinger, Marc; and Kramer, Karl-Heinz, 5,701,238, Cl. 363-21.000.
Siemens Business Communication Systems, Inc.: *See*—
Klimek, John Ramon; and Weiss, David, 5,701,334, Cl. 375-364.000.
Perelman, Roberto; and Yuan, Chris, 5,701,120, Cl. 340-825.020.
Siemens Components, Inc.: *See*—
Figueria, Robert J., Jr., 5,701,007, Cl. 250-231.130.
Siemens Corporate Research, Inc.: *See*—
Xu, Beilei; and Qian, Jianzhong, 5,699,799, Cl. 128-653.100.
Siemens Elema AB: *See*—
Lekholm, Anders; and Wård, Leif, 5,699,788, Cl. 128-203.120.
Siemens Nixdorf Informationssysteme Aktiengesellschaft: *See*—
Schmidt, Peter; Heise, Wolfgang; and Lappe, Bernhard, 5,699,741, Cl. 101-463.000.
Sienkiewicz, Henry R.: *See*—
Bell, Mace H.; and Sienkiewicz, Henry R., 5,700,275, Cl. 606-208.000.
Sieth, Kenneth J.: *See*—
Steinhardt, Michael D.; Balan, Isadore; and Sieth, Kenneth J., 5,701,388, Cl. 392-471.000.
Sigafoos, Robert D., to University of Pennsylvania, Trustees of the. Modular shoeing system. 5,699,861, Cl. 168-17.000.
Sigmon, Allen: *See*—
Bullard, Larry I.; Sigmon, Allen; and Tornero, Roger, 5,700,060, Cl. 297-452.630.
Sikorski, Siegfried: *See*—
Puchinger, Franz; Rossman, Axel; Sikorski, Siegfried; and Wydra, Gerhard, 5,700,743, Cl. 442-243.000.
Sikorsky Aircraft Corporation: *See*—
Amelio, Armand F., 5,699,965, Cl. 239-127.300.
Silence, Scott M.; Creatura, John A.; Hsieh, Bing R.; Ziolo, Ronald F.; and Ellis, Richard W., to Xerox Corporation. Coated carrier particles. 5,700,615, Cl. 430-106.600.
Silha, Edward John: *See*—
Arndt, Richard Louis; Nicholson, James Otto; Silha, Edward John; Thurber, Steven Mark; and Youngs, Amy May, 5,701,495, Cl. 395-736.000.
Silicon Packaging Technology: *See*—
Dlugokecki, Joseph J., 5,700,697, Cl. 437-8.000.
Silicon Valley Group, Inc.: *See*—
Van Doren, Matthew J.; Sauer, Don; Slocum, Alexander H.; Rocki, David Pap; Tam, Johann; and Gerszewski, Larry, 5,700,046, Cl. 294-119.100.
Silitek Corporation: *See*—
Tsai, Chi-Lung, 5,700,984, Cl. 200-5.00A.
Sills, Marsha Carolyn: *See*—
Deckner, George Endel; Pichardo, Francisco Antonio; Alban, Noelle Carolyn; and Sills, Marsha Carolyn, 5,700,452, Cl. 424-59.000.
Silver, Andrew; and Stamos, Stamos, to Telefonaktiebolaget LM Ericsson (publ). System and method for implementing a combined mobile phone and pager in a telecommunications network. 5,701,337, Cl. 379-57.000.
Silver, Bernard Stewart. Process for extracting with liquids soluble substances from subdivided solids. 5,700,464, Cl. 424-123.000.
Silverstein, Mike. Adjustable trowel and method of producing. 5,699,580, Cl. 15-235.700.
Silvian, Sergiu, to Pacesetter, Inc. Method and apparatus for controlling the charging phase of an implantable cardioverter-defribrillator. 5,700,280, Cl. 607-5.000.
Sim, Jai-hoon: *See*—
Lee, Kyu-chan; Lee, Sang-bo; and Sim, Jai-hoon, 5,701,268, Cl. 365-205.000.
Simmonds Precision Products Inc.: *See*—
Giannetti, William Bernard, 5,700,342, Cl. 156-245.000.
Simmons, John Wayne: *See*—
Wetters, John; Simmons, John Wayne; Fernandez, Virgilio Alejandro; Ahrens, Art; and Carsello, Steve, 5,701,600, Cl. 455-208.000.
Simon, Theodore: *See*—
Neiser, Gabe; Simon, Theodore; and Schweiger, Barry, 5,700,158, Cl. 439-501.000.
Simonette, Dallas W., to GP Companies, Inc. Low profile positive displacement pump system. 5,700,137, Cl. 417-364.000.
Simons, Fred M. Reduced impact cane. 5,699,819, Cl. 135-82.000.
Simpson, Roger T.; and Todd, Kevin B., to Borg-Warner Automotive, Inc. Integral inlet and pressure relief valve for an automotive tensioner. 5,700,213, Cl. 474-110.000.
Simpson, Roger T.; and Mott, Philip J., to Borg-Warner Automotive, Inc. Hydraulic tensioner for dual chain system. 5,700,216, Cl. 474-110.000.
Sims, Jeffrey Scott: *See*—
Goach, Kenneth Edmund, Jr.; Meyer, Gregory Phillip; and Sims, Jeffrey Scott, 5,701,498, Cl. 395-762.000.
Simula Inc.: *See*—
Schaefer, Philip R., 5,701,006, Cl. 250-227.160.
Singal, Pawan: *See*—
Tinen, William J.; Singal, Pawan; Hooper, Douglas; and Wendt, Alan C., 5,699,641, Cl. 52-506.070.
Singapore Computer Systems Limited: *See*—
Yong, Dennis; Cheng, Viktor Choong-Hung; Lim, Liat; and Tay, Siew Choon, 5,701,466, Cl. 395-611.000.
Singh, Gurbir; Wang, Wen-Hann; Rhodehamel, Michael W.; Bauer, John M.; and Sarangdhar, Nitin V., to Intel Corporation. Method and apparatus for transferring information between a processor and a memory system. 5,701,503, Cl. 395-800.000.
Sinha, Satyadeo Narain; Varady, Arthur Joseph; and Gilbert, Richard John, to Ford Global Technologies, Inc. Method of controlling fuel during engine misfire. 5,700,954, Cl. 73-116.000.
Sinta, Roger F.: *See*—
Thackeray, James W.; Sinta, Roger F.; Denison, Mark D.; and Ablaza, Sheri L., 5,700,624, Cl. 430-270.100.
Siwek, Howard Alexander: *See*—
Jacopi, Tom William; Payton, Brian Gerrit; and Siwek, Howard Alexander, 5,701,456, Cl. 395-604.000.
Six Corners Development Company: *See*—
Stein, Andrew M.; and Jinks, Andrew, 5,699,720, Cl. 99-323.900.
Skaletz, Detlef: *See*—
Heckel, Horst; Skaletz, Detlef; Wagner, Bruno; and Heydweiller, Joachim, 5,700,556, Cl. 428-297.400.
SKC Limited: *See*—
Lee, Chang-Yong; Kim, Joo-Hwan; and Ryu, Soo-Sun, 5,699,848, Cl. 164-46.000.
Sky Aluminium Co., Ltd.: *See*—
Matsuo, Mamoru; and Yan, Zhu, 5,700,424, Cl. 266-108.000.
Slamon, Dennis: *See*—
Hirth, Klaus Peter; Schwartz, Donna Pruess; Mann, Elaina; Shawver, Laura Kay; Keri, Gyorgi; Szekely, Istvan; Bajor, Tamas; Haimichael, Janis; Orfi, Laszlo; Levitzki, Alex; Gazit, Aviv; Ullrich, Axel; Lammers, Reiner; Kabbinavar, Fairooz F.; Slamon, Dennis; and Tang, Peng Cho, 5,700,822, Cl. 514-380.000.
Sloan-Kettering Institute for Cancer Research: *See*—
Breslow, Ronald; Marks, Paul A.; and Rifkind, Richard A., 5,700,811, Cl. 514-314.000.
Watanabe, Kyoichi A.; Pankiewicz, Krzystof W.; Goldstein, Barry M.; and Bell, J. Ellis, 5,700,786, Cl. 514-47.000.
Slocum, Alexander H.: *See*—
Van Doren, Matthew J.; Sauer, Don; Slocum, Alexander H.; Rocki, David Pap; Tam, Johann; and Gerszewski, Larry, 5,700,046, Cl. 294-119.100.
Slocum, Alexander Henry: *See*—
Wasson, Kevin Lee; and Slocum, Alexander Henry, 5,700,092, Cl. 384-115.000.
Small, Gary: *See*—
Ganapol, David; and Small, Gary, 5,700,045, Cl. 294-64.100.
Smallman, Gary W.: *See*—
Wieloch, Francis J.; LaManna, Gina M.; Jackson, Frank J., Jr.; Smallman, Gary W.; Kemp, Kenneth A.; Speakman, Edward J.; Grabowski, Edward F.; Street, Terry L.; Wisniewski, Carl A.; and Czerniawski, John A., 5,699,584, Cl. 15-256.520.
Smart, David Clinton: *See*—
Balling, Edward Norman; Smart, David Clinton; Dussinger, Thomas Edgar; and Zander, Dennis Roland, 5,701,536, Cl. 396-396.000.
SMC Corporation: *See*—
Hayashi, Bunya; and Shimauchi, Keisuke, 5,699,830, Cl. 137-554.000.
Hayashi, Bunya; and Ishikawa, Makoto, 5,699,834, Cl. 137-884.000.
Smerdel, Michael E.: *See*—

Highman, Timothy J.; Smerdel, Michael E.; and Behm, Stephen M., 5,700,365, Cl. 204-469.000.
Smith, Adrian Leonard: *See*—
Leeson, Paul David; Smith, Adrian Leonard; Ridgill, Mark Peter; Baker, Raymond; Curtis, Neil Roy; and Kulagowski, Janusz Jozef, 5,700,809, Cl. 514-300.000.
Smith, David Fletcher: *See*—
Prieto, Pedro Antonio; Smith, David Fletcher; Cummings, Richard Dale; Kopchick, John Joseph; Mukerji, Pradip; Moremen, Kelley Wilson; and Pierce, James Michael, 5,700,671, Cl. 435-172.300.
Smith, Donald Scott: *See*—
Audi, Richard Francois; Smith, Donald Scott; Carroll, Phillip Patrick, III; and Rossi, Michael Anthony, 5,700,545, Cl. 428-131.000.
Smith, Fraser S.: *See*—
Higuchi, Fumii; Ianni, John J.; Smith, Fraser S.; Hawkins, Michael G.; and Leonardo, Joseph L., 5,700,413, Cl. 264-145.000.
Smith, Julius O., III; and Cook, Perry R., to Leland Stanford Junior University, The Board of Trustees of the. System and method for real time sinusoidal signal generation using waveguide resonance oscillators. 5,701,393, Cl. 395-2.670.
Smith, Kevin P.: *See*—
Handelsman, Jo; Stabb, Eric V.; Jacobson, Lynn M.; Goodman, Robert M.; Johnson, David W.; and Smith, Kevin P., 5,700,462, Cl. 424-93.460.
Smith, Matthew W., to Microsoft Corporation. Redbook audio sequencing. 5,701,511, Cl. 395-806.000.
Smith, Michelle Marie: *See*—
Cope, Frederick Oliver; Rausch, Linda Sue; Richards, Ernest William; Smith, Michelle Marie; Abbruzzese, Bonnie Chandler; and Pero, Joan Marie, 5,700,782, Cl. 514-21.000.
Smith, Rodney I. Prefabricated building panel. 5,699,644, Cl. 52-801.100.
Smith, Ronald Q.: *See*—
Braseth, David L.; Eiden, Glen P.; and Smith, Ronald Q., 5,701,473, Cl. 395-621.000.
Smith, Steele C., III. Identification protective cover. 5,700,036, Cl. 283-72.000.
Smith, Stephen: *See*—
Bender, James G.; Maples, Phillip B.; Smith, Stephen; Unverzagt, Kristen L.; and Van Epps, Dennis E., 5,700,691, Cl. 435-325.000.
Smith, Stuart B., to Hehr International Inc. Peroxide-generating composition for use with unsaturated polyester resins and method of use. 5,700,856, Cl. 524-176.000.
SmithKline Beecham Corporation: *See*—
Daines, Robert A., 5,700,943, Cl. 546-296.000.
Fortunak, Joseph, 5,700,939, Cl. 546-116.000.
SmithKline Beecham p.l.c.: *See*—
Gaster, Laramie Mary, 5,700,818, Cl. 514-364.000.
Hodgson, John Edward; and Burnham, Martin Karl Russell, 5,700,928, Cl. 536-23.700.
Smooth Ocean Enterprise Co., Ltd.: *See*—
Hsu, Hua-Shan, 5,699,602, Cl. 29-335.000.
Snow Brand Milk Products Co., Ltd.: *See*—
Murakami, Mototake; Aoe, Seiichiro; and Tatsumi, Kiyoshi, 5,700,509, Cl. 426-495.000.
Societe C.G.A.O.: *See*—
Dufraisse, Charles, 5,700,124, Cl. 414-111.000.
Societe Industrielle et Commerciale de Materiel Aeronautique: *See*—
Pinault, Fabrice, 5,699,984, Cl. 244-122.00R.
Societe National d'Etude et de Construction de Moterus d'Aviation S.N.E.C.M.A.: *See*—
Barbot, André M.; Caruel, Jacques E. J.; and Soligny, Marcel R., 5,700,130, Cl. 416-95.000.
Societe Nationale d'Etude et de Construction de Moteurs d'Aviation "Snecma": *See*—
Bainachi, Daniel Olivier; Dusserre-Telmon, Guy Franck Paul; and Plona, Daniel Georges, 5,700,011, Cl. 277-65.000.
Capelle, Jean-Yves; Desaulty, Michel André Albert; and Le Letty, Eric Charles Louis, 5,699,663, Cl. 60-204.000.
Surdi, Jean Marc, 5,700,133, Cl. 416-248.000.
Softimage: *See*—
Stevens, Marc P.; and Crawford, Alan, 5,701,404, Cl. 395-123.000.
Sohaiby, Frank, to Tomko, Robert S. Exterior window cleaning apparatus. 5,699,576, Cl. 15-103.000.
Sohma, Masahiko; Zushi, Osamu; Machijima, Kenji; and Tsutsumi, Hisao, to Yokohama Rubber Co., Ltd., The; and Tokyo Rope Mfg. Co., Ltd. Spool feeding method and spool feeder. 5,700,126, Cl. 414-416.000.
Sohn, Erich: *See*—
Rösch, Wolfgang; Sohn, Erich; Bauer, Klaus; and Bieringer, Hermann, 5,700,758, Cl. 504-106.000.
Sojomihardjo, Soebianto: *See*—
Soon-Shiong, Patrick; Desai, Neil P.; Sandford, Paul A.; Heintz, Roswitha A.; and Sojomihardjo, Soebianto, 5,700,848, Cl. 522-7.000.
Soldato, Piero Del, to NICOX S.A. Nitric esters having anti-inflammatory and/or analgesic activity and process for their preparation. 5,700,947, Cl. 546-491.000.
Soligny, Marcel R.: *See*—
Barbot, André M.; Caruel, Jacques E. J.; and Soligny, Marcel R., 5,700,130, Cl. 416-95.000.
Solve, Torbjorn: *See*—
Croft, Thomas Milton; Dent, Paul Wilkinson; Harte, Lawrence J.; and Solve, Torbjorn, 5,701,329, Cl. 375-224.000.
Somary, Geoffrey, to Eisenmann Corporation. Rotary valve for regenerative thermal oxidizer. 5,700,433, Cl. 422-171.000.
Somerhausen, Bernard: *See*—
Zivkovic, Alexandre; Meynckens, Jean-Pierre; and Somerhausen, Bernard, 5,700,309, Cl. 75-252.000.
Somfy: *See*—
Villette, Jean De Chevron; Perache, Jean-Michel; and Lagarde, Eric, 5,699,847, Cl. 160-168.10P.
Son, Seok-bong: *See*—
Kim, Chang-seob; Son, Seok-bong; Kim, Sang-kyun; and Jeong, Bong-uk, 5,701,052, Cl. 313-346.00R.
Song, Yong-seok, to Samsung Display Devices Co., Ltd. Electron gun for color cathode ray tube. 5,701,053, Cl. 313-412.000.
Song, Young Jin: *See*—
Lee, Jun Seok; Hur, Hun; and Song, Young Jin, 5,700,626, Cl. 430-396.000.
Sonobe, Hisao: *See*—
Kumagai, Tatsuya; Kajioka, Hiroshi; Kobayashi, Osamu; Akiyama, Munehiro; Oho, Shigeru; and Sonobe, Hisao, 5,701,177, Cl. 356-150.000.
Sonoco Products Company, Inc.: *See*—
Rieker, Gerd, 5,699,683, Cl. 68-198.000.
Sony Corporation: *See*—
Goto, Kazushige; and Miyazaki, Takahiro, 5,700,563, Cl. 428-328.000.
Hineno, Satoshi; and Andoh, Masaki, 5,701,287, Cl. 369-110.000.
Ichimura, Gen; and Noguchi, Masayoshi, 5,701,124, Cl. 341-50.000.
Kato, Motiki, 5,701,164, Cl. 348-699.000.
Katsuyama, Akira; Tomizawa, Kenji; Nagano, Shuichi; and Koya, Takashi, 5,701,385, Cl. 386-106.000.
Lam, Raymond K. F., 5,700,519, Cl. 427-253.000.
Matsumoto, Kissei; Fuchu, Katsuki; and Katsuki, Shinji, 5,701,282, Cl. 369-32.000.
Muroyama, Masakazu, 5,700,736, Cl. 438-622.000.
Richards, John William; and Dorricott, Martin Rex, 5,701,163, Cl. 348-578.000.
Sumi, Hirofumi, 5,700,722, Cl. 437-200.000.
Tajima, Hiroshi, 5,701,212, Cl. 360-51.000.
Tsukamoto, Masanori; and Gocho, Tetsuo, 5,700,349, Cl. 156-657.100.
Watanabe, Yasuhiro, 5,699,977, Cl. 242-439.000.
Yamamoto, Haunori, 5,701,229, Cl. 361-617.000.
Sony United Kingdom Limited: *See*—
Richards, John William; and Dorricott, Martin Rex, 5,701,163, Cl. 348-578.000.
Soon-Shiong, Patrick; Desai, Neil P.; Sandford, Paul A.; Heintz, Roswitha A.; and Sojomihardjo, Soebianto, to Vivorx Inc. Gel compositions prepared from crosslinkable polysaccharides, polycations and/or lipids and uses therefor. 5,700,848, Cl. 522-7.000.
Sosa, Toshio: *See*—
Fukuhara, Toru; Sosa, Toshio; Dobashi, Toshio; Sasagaki, Nobuaki; and Hara, Masaharu, 5,701,519, Cl. 396-48.000.
Southeast Walls, Inc.: *See*—
Bourgeois, Kenneth W.; Morris, Thomas R.; Morris, Joseph R.; and Morris, John F., 5,699,640, Cl. 52-309.400.
Southerland, Dale A.: *See*—
Ross, David O.; Southerland, Dale A.; and Gantt, Timothy D., 5,699,756, Cl. 122-17.000.
Southern Clay Products, Inc.: *See*—
Bauer, Carl J.; and Knesek, Benjamin W., 5,700,319, Cl. 106-486.000.
Southern, Edwin, to Isis Innovation Limited. Apparatus and method for analyzing polynucleotide sequences and method of generating oligonucleotide arrays. 5,700,637, Cl. 435-6.000.
Southpac Trust International, Inc.: *See*—
Craig, Frank; Straeter, Joseph G.; and Weder, Donald E., 5,699,652, Cl. 53-449.000.
Weder, Donald E.; Straeter, Joseph G.; and Craig, Franklin J., 5,699,647, Cl. 53-397.000.
Weder, Donald E., 5,699,648, Cl. 53-410.000.
Southwestern Bell Technology Resources, Inc.: *See*—
Harbin, Steven Anthony; and Rainer, Brian Keith, 5,701,583, Cl. 455-25.000.
SP Reifenwerke GmbH: *See*—
Gerresheim, Manfred, 5,700,336, Cl. 152-540.000.
Spada, Valter, to SASIB S.p.A. Angular conveyor for fragile cylindrical objects, in cigarette packing machines. 5,699,893, Cl. 198-478.100.
Spada, Walter; and Di Camillo, Orazio, to SASIB S.p.A. Transfer device, and in particular, a packaging machine for cigarettes or the like, which is provided with the said transfer devices. 5,699,896, Cl. 198-747.000.
Spada, Walter; and Gherardi, Gian Luigi, to Sasib S.p.A. Machine of the type capable of using strips of material wound in reels. 5,699,979, Cl. 242-559.300.
Spaleck, Walter: *See*—
Winter, Andreas; Spaleck, Walter; and Bachmann, Bernd, 5,700,886, Cl. 526-119.000.
Span-America Medical Systems, Inc.: *See*—
Wilkinson, John W.; and Raburn, Richard W., 5,699,570, Cl. 5-713.000.
Spancrete Industries, Inc.: *See*—
Dugan, Joseph T., 5,699,875, Cl. 182-3.000.
Spanevello, Rolando A.: *See*—
Hirschmann, Ralph F.; Spanevello, Rolando A.; and Nutt, Ruth F., 5,700,905, Cl. 530-311.000.
Spangenberg, Jorgen: *See*—

Kammerer, Eric; Biering, Lothar; Grohs, Erhard; Groht, Klaus; Reynvaan, Conrad; Siegmund, Horst; Spangenberg, Jorgen; and Uecker, Arwed, 5,701,046, Cl. 310-251.000.
Sparkman, John Paul: *See—*
Logan, Jeffrey Allen; Hattery, John Clifford, Jr.; Sparkman, John Paul; and Pray, David Allan, 5,700,028, Cl. 280-728.200.
Sparkman, Scott. Solar energy collector. 5,699,785, Cl. 126-623.000.
Sparks, Marcus N.: *See—*
Johnson, Randall Eugene; and Sparks, Marcus N., 5,700,111, Cl. 405-258.000.
Speakman, Edward J.: *See—*
Wieloch, Francis J.; LaManna, Gina M.; Jackson, Frank J., Jr.; Smallman, Gary W.; Kemp, Kenneth A.; Speakman, Edward J.; Grabowski, Edward F.; Street, Terry L.; Wisniewski, Carl A.; and Czerniawski, John A., 5,699,584, Cl. 15-256.520.
Speck, Georg: *See—*
Schnorrenberg, Gerd; Esser, Franz; Dollinger, Horst; Jüng, Birgit; Speck, Georg; and Burger, Erich, 5,700,827, Cl. 514-414.000.
Speck, Roy E., to Analytical Control Systems, Inc. Coagulation assays and reagents comprising tannin or propyl gallate and a metal ion. 5,700,634, Cl. 435-4.000.
Speckhard, Thomas A., to Minnesota Mining And Manufacturing Company. Method and apparatus for applying liquid toner to a print medium using multiple toner applicators for each liquid toner. 5,701,561, Cl. 399-233.000.
Spectra, Inc.: *See—*
Moynihan, Edward R.; Gailus, David W.; Paliflca, Robert G.; Hoisington, Paul A.; Hine, Nathan P.; Adams-Brady, David; Biggs, Melvin L.; McDonald, Marlene M.; Barss, Steven H.; Mackay, Diane; Paulson, Bruce A.; and Mackay, Stephen C., 5,701,148, Cl. 347-92.000.
Speer, Drew V.; Roberts, William P.; Morgan, Charles R.; and Ebner, Cynthia L., to W. R. Grace & Co.-Conn. Packaging articles suitable for scavenging oxygen. 5,700,554, Cl. 428-220.000.
Spencer, Dwain F. Methods of selectively separating CO_2 from a multicomponent gaseous stream. 5,700,311, Cl. 95-236.000.
Speriosu, Virgil Simon: *See—*
Fontana, Robert Edward, Jr.; Gurney, Bruce Alvin; Lin, Tsann; Speriosu, Virgil Simon; Tsang, Ching Hwa; and Willhoit, Dennis Richard, 5,701,223, Cl. 360-113.000.
Sperry, Laurence Burst; and Davlin, Anthony Orkin. Foam in bag packaging system. 5,699,902, Cl. 206-219.000.
Špindler, Zdeněk; Novotný , Vojtěch; and Semrád, Petr, to Rieter Elitex a.s. Method of, and device for, detecting the yarn end on a bobbin. 5,699,971, Cl. 242-35.60E.
Spine-Tech, Inc.: *See—*
Kuslich, Stephen D.; and Kohrs, Douglas W., 5,700,291, Cl. 623-17.000.
Spitz, William Tracy: *See—*
Pharney, Julian Robert; and Spitz, William Tracy, 5,700,167, Cl. 439-676.000.
Splett, Armin, to Siemens Aktiengesellschaft. Method for fabricating a silicon semiconductor substrate having an integrated waveguide and an optical fiber coupled thereto. 5,700,382, Cl. 216-24.000.
Square D Company: *See—*
Scheel, Jerry Lynn; and Siebels, Randy Luther, 5,701,110, Cl. 335-132.000.
SRI International: *See—*
Monforte, Joseph Albert; Becker, Christopher Hank; Shaler, Thomas Andrew; and Pollart, Daniel Joseph, 5,700,642, Cl. 435-6.000.
Sridhar, Ramalingam; and Zhang, Xuguang, to Research Foundation of State University of New York. Logic circuits for wave pipelining. 5,701,094, Cl. 326-113.000.
Srinivasan, Vijayaraghavan: *See—*
Lockett, Michael James; and Srinivasan, Vijayaraghavan, 5,699,671, Cl. 62-63.000.
Srivastava, Anand Kumar: *See—*
Kere, Juha; Schlessinger, David; de la Chapelle, Albert; and Srivastava, Anand Kumar, 5,700,926, Cl. 536-23.100.
St. Francis Research Institute: *See—*
Boettger, Conrad H., and Hawks, Bill J., Jr., 5,699,988, Cl. 248-122.100.
Stabb, Eric V.: *See—*
Handelsman, Jo; Stabb, Eric V.; Jacobson, Lynn M.; Goodman, Robert M.; Johnson, David W.; and Smith, Kevin P., 5,700,462, Cl. 424-93.460.
Stackenfeld, Avi J.: *See—*
Reichek, Joshua A. S.; and Stackenfeld, Avi J., 5,701,153, Cl. 348-15.000.
Stahley, Robert E., to Procter & Gamble Company, The. Inverting bag co-dispenser. 5,699,935, Cl. 222-94.000.
Stamm, Michael R.: *See—*
Sheiness, Diana K.; Adams, Trevor H.; Stamm, Michael R.; Cangelosi, Gerard A.; Britschgi, Theresa B.; and Dix, Connie K., 5,700,636, Cl. 435-6.000.
Stamos, Stamos: *See—*
Silver, Andrew; and Stamos, Stamos, 5,701,337, Cl. 379-57.000.
Stanford Telecommunications, Inc.: *See—*
Schuchman, Leonard; and Bruno, Ronald, 5,701,328, Cl. 375-204.000.
Stanford, Thomas H.; Sahne, Farhad Noroozi; Riches, Thomas P.; and O'Neill, Robert, to HM Electronics. Neck engageable transducer support assembly and method of using same. 5,701,356, Cl. 381-187.000.
Stark, Ivan L., to Newell Manufacturing Company. Extruded window jamb liner with yieldable sealing means. 5,699,636, Cl. 49-419.000.
Steblianko, Valerij Leontievich; and Riabkov, Vitalij Makrovich, to Metal Technology, Inc. Electrolytic process for cleaning and coating electrically conducting surfaces. 5,700,366, Cl. 205-87.000.
Stebnitz, Kathleen K.: *See—*
Pahuski, Edward E.; Dimond, Randall L.; Priest, John H.; Zandt, Lisa; Stebnitz, Kathleen K.; and Mendoza, Leopoldo G., 5,700,645, Cl. 435-6.000.
Steele, Guy: *See—*
Zalewski, Wojciech T.; Steele, Guy; and MacKenzie, Christopher J., 5,700,026, Cl. 280-704.000.
Steele, Walter Brian: *See—*
Meredith, Sheldon Kent; and Steele, Walter Brian, 5,701,596, Cl. 455-103.000.
Steelman, Michael L.; and Long, Calvin W., to United States of America, Army. Methods for reducing surface friction in fiber optic dispensers. 5,700,341, Cl. 156-172.000.
Steffan, Jeffrey R.: *See—*
Legvold, Vernon J.; Liu, Julia; Michod, Carol S.; Ng, Chan Yiu; Sherman, William G., II; Steffan, Jeffrey R.; and Van Gundy, Steven R., 5,701,429, Cl. 395-441.000.
Steffes, Helmut; Dinkel, Dieter; Vogel, Gunther; and Volz, Peter, to ITT Automotive Europe GmbH. Electrohydraulic pressure control device. 5,700,071, Cl. 303-119.200.
Steidinger, Donald J., to Tamarack Products, Inc. Integrated label, method and apparatus. 5,700,536, Cl. 428-40.100.
Steigerwald, Robert Louis; and Stevanovic, Ljubisa Dragoljub, to General Electric Company. Elimination of striations in fluorescent lamps driven by high-frequency ballasts. 5,701,059, Cl. 315-219.000.
Steimle, Andre; Louis, Didier; and Paillet, Guy, to International Business Machines Corporation. Circuit for pre-charging a free neuron circuit. 5,701,397, Cl. 395-27.000.
Stein, Andrew M.; and Jinks, Andrew, to Six Corners Development Company. Corn popping kettle assembly. 5,699,720, Cl. 99-323.900.
Stein, Götz; McEvoy, Noel; Lehmann, Ernst; and Tarchini, Marcello, to Maschinenfabrik WIFAG. Web-fed rotary press. 5,699,735, Cl. 101-219.000.
Steinbach, Heinz: *See—*
Hessbrüggen, Norbert; and Steinbach, Heinz, 5,699,598, Cl. 29-27.00C.
Steinhardt, Michael D.; Balan, Isadore; and Sieth, Kenneth J., to Kohler Co. Combined heater and pump. 5,701,388, Cl. 392-471.000.
Steinhauser, Hermann A.; and Brüschke, Hartmut E. A., to Deutsche Carbone AG. Pervaporation membranes and use thereof.. 5,700,374, Cl. 210-640.000.
Steinmeyer, Andreas; Neef, Gunter; Kirsch, Gerald; Schwarz, Katica; Thieroff-Ekerdt, Ruth; Wiesinger, Herbert; and Haberey, Martin, to Schering Aktiengesellschaft. Vitamin D derivatives modified in the 20-position and pharmaceutical compositions thereof. 5,700,791, Cl. 514-167.000.
Steinwachs, Lawrence J.: *See—*
Anderson, Charles C.; Steinwachs, Lawrence J.; and Schum, Gary W., 5,700,623, Cl. 430-256.000.
Stelz, Franz-Xaver: *See—*
Kellner, Walter-Ulrich; Küsters, Karl-Heinz; Müller, Wolfgang; and Stelz, Franz-Xaver, 5,701,022, Cl. 257-300.000.
Stendahl, Gary B.: *See—*
Brewer, James E.; Olson, Kenneth F.; Stolte, John F.; Utke, Nora J.; and Stendahl, Gary B., 5,700,281, Cl. 607-5.000.
Stephan, Werner: *See—*
Stricker, Wolfgang; Hellmann, Udo; and Stephan, Werner, 5,700,330, Cl. 134-22.190.
Stephany, Thomas M.; Mey, William; and Furlani, Edward P., to Eastman Kodak Company. Electrographic printer comprising a magnetic brush and a hall effect magnetic sensor. 5,701,552, Cl. 399-53.000.
Stephens, Alan Palmer: *See—*
Baugher, Mark John; Chang, Philip Yen-Tang; Morris, Gregory Lynn; and Stephens, Alan Palmer, 5,701,465, Cl. 395-610.000.
Stevanovic, Ljubisa Dragoljub: *See—*
Steigerwald, Robert Louis; and Stevanovic, Ljubisa Dragoljub, 5,701,059, Cl. 315-219.000.
Stevens, Marc P.; and Crawford, Alan, to Softimage. Method and system for efficiently trimming a nurbs surface with a projected curve. 5,701,404, Cl. 395-123.000.
Stewart, J. Marcus: *See—*
Downey, Walter J.; Sutterlin, Philip H.; Stewart, J. Marcus; and Hurlbut, Amy O., 5,701,240, Cl. 363-35.000.
Stewart, John T.: *See—*
Wood, John M.; and Stewart, John T., 5,699,776, Cl. 123-531.000.
Stiehl, Mark A.; Bergstresser, William A.; and Niedospial, John J., to Abbott Laboratories. Holder for cartridge-needle unit. 5,700,246, Cl. 604-198.000.
Stinnavage, Paul, to Calgon Corporation. Synergistic antimicrobial composition of 1,2-dibromo-2,4-dicyanobutaneand alkylguanidine compounds. 5,700,834, Cl. 514-526.000.
Stoetzel, William L.; and Culler, Scott R., to Minnesota Mining and Manufacturing Company. Radiation curable abrasive article with tie coat and method. 5,700,302, Cl. 51-295.000.
Stolte, John F.: *See—*
Brewer, James E.; Olson, Kenneth F.; Stolte, John F.; Utke, Nora J.; and Stendahl, Gary B., 5,700,281, Cl. 607-5.000.
Stone, Lawrence H.; Zhao, William J.; and Alamzad, Hossein, to Kason Corporation. Vibratory agglomerator. 5,700,497, Cl. 425-222.000.

Stone, Paul Andrew; and Thomas, Rickey James, to Black & Decker Inc. Spade-type boring bit and an associated method and apparatus for forming metallic parts. 5,700,113, Cl. 408-1.00R.
Storage Technology Corporation: *See—*
Falace, Joseph Philip; and Miller, John David, 5,700,125, Cl. 414-276.000.
Storz, Achim; and Eigeldinger, Norbert, to Deutsche Thomson-Brandt GmbH. Method and means for the transmitter-side controller operation of a receiver-side device. 5,701,593, Cl. 455-70.000.
Stout, Jennifer L.: *See—*
Stout, Luke A.; and Stout, Jennifer L., 5,699,632, Cl. 43-25.000.
Stout, Luke A.; and Stout, Jennifer L. Insulated fishing mitt for cooperating with rod handle. 5,699,632, Cl. 43-25.000.
Stover, Charles Kendall; and Mahairas, Gregory G., to PathoGenesis Corporation. Virulence-attenuating genetic deletions deleted from mycobacterium BCG. 5,700,683, Cl. 435-252.310.
Stowe Woodward Company: *See—*
Moschel, Charles, 5,699,729, Cl. 100-99.000.
Straeter, Joseph G.: *See—*
Craig, Frank; Straeter, Joseph G.; and Weder, Donald E., 5,699,652, Cl. 53-449.000.
Weder, Donald E.; Straeter, Joseph G.; and Craig, Franklin J., 5,699,647, Cl. 53-397.000.
Strait, Chad A.: *See—*
Pham, Hoang T.; Strait, Chad A.; and Kirk, Richard O., 5,700,885, Cl. 525-534.000.
Stratagene: *See—*
Mathur, Eric J.; Marsh, Edward J.; and Schoettlin, Warren E., 5,700,672, Cl. 435-183.000.
Strauss, Douglas W.: *See—*
Peyser, Mark S.; Cuny, Douglas J.; Strauss, Douglas W.; Reed, Scott W.; Rethy, Csaba L.; and Aranyi, Ernie, 5,700,270, Cl. 606-142.000.
Street, Terry L.: *See—*
Wieloch, Francis J.; LaManna, Gina M.; Jackson, Frank J., Jr.; Smallman, Gary W.; Kemp, Kenneth A.; Speakman, Edward J.; Grabowski, Edward F.; Street, Terry L.; Wisniewski, Carl A.; and Czerniawski, John A., 5,699,584, Cl. 15-256.520.
Streicher, Stanley H.; and Warley, Guillermo A. Bar code based refueling system. 5,700,999, Cl. 235-381.000.
Stricker, Wolfgang; Hellmann, Udo; and Stephan, Werner, to Herberts Gesellschaft mit beschrankter Haftung. Process for cleaning water and organic solvent based lacquer from equipment using a single solvent mixture. 5,700,330, Cl. 134-22.190.
Strizhak, Elliott S.: *See—*
Caterino, Garret J.; Hopkins, Patrick W.; and Strizhak, Elliott S., 5,701,525, Cl. 396-132.000.
Strobel, Pierre: *See—*
Bloch, Didier; Le Cras, Frédéric; and Strobel, Pierre, 5,700,442, Cl. 423-599.000.
Stromag, Inc.: *See—*
Albrecht, James W., 5,699,883, Cl. 188-171.000.
Strong, Kenneth M., to MacDermid Imaging Technology. Assembly and method for reclaiming incompatible resins from printing plates. 5,699,739, Cl. 101-463.100.
Stroup, Eric W.: *See—*
Hlady, Vladimir; Pungor, Andras; and Stroup, Eric W., 5,700,953, Cl. 73-105.000.
Struth, Gerhard: *See—*
Uhlmann, Eckart; and Struth, Gerhard, 5,700,188, Cl. 451-532.000.
Strutz, Frank: *See—*
Neilson, Eric G.; Danoff, Theodore; Okada, Hirokazu; and Strutz, Frank, 5,700,690, Cl. 435-320.100.
Stuart, Susan G.: *See—*
Braxton, Scott Michael; Diep, Dinh; and Stuart, Susan G., 5,700,924, Cl. 536-23.100.
Stuckman, Bruce Edward; and Hayner, David Alan, to Motorola, Inc. Method of programming a polynomial processor. 5,701,395, Cl. 395-20.000.
Stuckman, Bruce Edward: *See—*
Harris, Daryl Robert; Jambhekar, Shirang Nilkanth; Reber, William Louis; Stuckman, Bruce Edward; and Perttunen, Cary Drake, 5,701,258, Cl. 364-514.00R.
Sturges, James R.: *See—*
Ring, Martin D.; Mark, Roger; Flanagan, Peter F.; Brogan, Patrick M.; and Sturges, James R., 5,701,277, Cl. 367-163.000.
Sturman Industries: *See—*
Sturman, Oded E., 5,700,136, Cl. 417-270.000.
Sturman, Oded E., to Sturman Industries. Digital pump with bypass inlet valve. 5,700,136, Cl. 417-270.000.
Stutzman, Barbara A.: *See—*
Zajaczkowski, Michael J.; and Stutzman, Barbara A., 5,700,873, Cl. 525-283.000.
Su, Kai C.: *See—*
Isharani, Jayanti V.; Hung, Willaim M.; and Su, Kai C., 5,700,394, Cl. 252-301.210.
Su, Shan-Nan. Safety playing wheel means. 5,700,200, Cl. 472-26.000.
Subramanyam, Shanti, to Sun Microsystems, Inc. System and method for testing multiple database management systems. 5,701,471, Cl. 395-616.000.
Suda, Minoru, to Kokusai Denshin Denwa Kabushiki Kaisha. Dial-less calling device. 5,701,339, Cl. 379-88.000.
Suda, Shigeyuki: *See—*
Kato, Takashi; Tokumitsu, Jun; and Suda, Shigeyuki, 5,701,157, Cl. 348-240.000.
Suda, Taiichiro: *See—*
Fujii, Masumi; Suda, Taiichiro; Hotta, Yoshitsugu; Kitamura, Koichi; Jinno, Yukihiro; Mimura, Tomio; Shimojo, Shigeru; Iijima, Masaki; and Mitsuoka, Shigeaki, 5,700,437, Cl. 423-220.000.
Sudhakar, Muddu: *See—*
Chiussi, Fabio Massimo; Kumar, Vijay Pochampalli; Tryfonas, Christos; and Sudhakar, Muddu, 5,701,292, Cl. 370-232.000.
Suematsu, Hideki, to Fujicopian Co., Ltd. Thermal transfer recording medium. 5,700,584, Cl. 428-484.000.
Suemoto, Toshiro: *See—*
Katsuro, Noboru; Suemoto, Toshiro; Mizutani, Yoshihiro; and Shini, Masami, 5,700,552, Cl. 428-214.000.
Suetsugu, Masaru: *See—*
Shinojima, Satoshi; Suetsugu, Masaru; Morikawa, Yoshihiro; Shibata, Yuki; and Kaku, Rumiko, 5,700,784, Cl. 514-24.000.
Suga, Kazumi: *See—*
Aratani, Shuntaro; Ohshima, Masamichi; and Suga, Kazumi, 5,701,135, Cl. 345-89.000.
Sugano, Haruo: *See—*
Taniguchi, Tadatsugu; Muramatsu, Masami; Sugano, Haruo; Matsui, Hiroshi; Kashima, Nobukazu; and Hamuro, Junji, 5,700,913, Cl. 530-351.000.
Sugawara, Saburo, to Canon Kabushiki Kaisha. Eyepiece lens. 5,701,475, Cl. 359-644.000.
Sugen, Inc.: *See—*
Hirth, Klaus Peter; Schwartz, Donna Pruess; Mann, Elaina; Shawver, Laura Kay; Kéri, György; Székely, István; Bajor, Tamás; Haimichael, Janis; Orfi, László; Levitzki, Alex; Gazit, Aviv; Ullrich, Axel; and Lammers, Reiner, 5,700,823, Cl. 514-380.000.
Sugifune, Shin; Kanno, Tsutomu; and Nabeya, Hajime, to Alps Electric Co., Ltd. Optical bar code reading apparatus with signal processing circuit for eliminating regular reflection condition. 5,701,001, Cl. 235-472.000.
Sugimoto, Hitoshi: *See—*
Akiyama, Yuji; Hirabayashi, Hiromitsu; Nagoshi, Shigeyasu; Arai, Atsushi; Kurata, Tetsuji; Sugimoto, Hitoshi; and Matsubara, Miyuki, 5,701,146, Cl. 347-26.000.
Sugimoto, Katsumi, to Fujitsu Limited. Thermal fixing device having temperature control. 5,701,556, Cl. 399-70.000.
Sugimoto, Toshihiko; Miyaake, Chiharu; and Miki, Yousuke, to Nitto Denko Corporation. Flexible printed circuit and manufacturing method therefor. 5,700,562, Cl. 428-327.000.
Sugimoto, Yoichi; Urai, Yoshihiro; and Matsuda, Shohei, to Honda Giken Kogyo Kabushiki Kaisha. Braking force distribution control system for vehicle. 5,700,074, Cl. 303-186.000.
Sugita, Mitsuru: *See—*
Hiramatsu, Nobutaka; Sugita, Mitsuru; Mizuno, Yoshikazu; and Shibayama, Takayuki, 5,700,093, Cl. 384-276.000.
Sugiura, Michihiko, to Yokohama Rubber Co., Ltd., The. Golf ball. 5,700,209, Cl. 473-380.000.
Sugiyama, Akira; Nakayama, Tsuyoshi; Kato, Masaaki; Maruyama, Yoichiro; and Arisawa, Takashi, to Japan Atomic Energy Research Institute. Apparatus and method of stabilizing oscillation frequency for single axial mode frequency tunable laser oscillator and apparatus and method of frequency sweepable laser oscillation. 5,701,320, Cl. 372-32.000.
Sugiyama, Hidehiko: *See—*
Yamada, Yukio; Asami, Osamu; Sugiyama, Hidehiko; Idekoba, Chie; Hoshino, Fumihiko; Hirai, Masana; Kajino, Tsutomu; Imaeda, Takao; and Sarai, Kiyoko, 5,700,659, Cl. 435-69.100.
Sugiyama, Shuichiro: *See—*
Takatsu, Kazumasa; Kurokawa, Takashi; Echizen, Hiroshi; Koganei, Akio; Sugiyama, Shuichiro; and Adachi, Toshio, 5,700,326, Cl. 118-723.0MW.
Sugiyama, Tadashi: *See—*
Fukuda, Yoshiyuki; Kojima, Katsura; and Sugiyama, Tadashi, 5,701,563, Cl. 399-284.000.
Sugiyama, Wataru, to Brother Kogyo Kabushiki Kaisha. Print gap adjustor in a serial printer. 5,700,095, Cl. 400-55.000.
Suhadolnik, Robert J.; and Pfleiderer, Wolfgang, to Temple University - Of The Commonwealth System of Higher Education. 3'-deoxy or 3'-O-substituted-2',5'-oligoadenylates as antiviral agents. 5,700,785, Cl. 514-44.000.
Sukiennik, Corrine A.; Mathis, Michael P.; and Gray, Vivian, to Kimberley Clark Corporation. Universal fit face mask. 5,699,791, Cl. 128-206.130.
Sulin, John R. Bicycle security mount. 5,699,684, Cl. 70-234.000.
Sulzer Chemtech AG: *See—*
Bischof, Rudolf, 5,700,435, Cl. 422-245.100.
Sum, Fuk-Wah: *See—*
Albright, Jay Donald; Venkatesan, Aranapakam M.; Dusza, John P.; and Sum, Fuk-Wah, 5,700,796, Cl. 514-220.000.
Sumi, Hirofumi, to Sony Corporation. Process for forming silicide plugs in semiconductor devices. 5,700,722, Cl. 437-200.000.
Sumitomo Chemical Company, Limited: *See—*
Kanda, Yuji; Kokubo, Toshiyuki; Sato, Yufu; Sasaki, Toshio; Shiraishi, Hiroyuki; and Shigematsu, Yuji, 5,700,895, Cl. 526-348.000.
Kotani, Kozo; Kawakita, Toshio; Sakaya, Taiichi; and Kuroda, Toshiya, 5,700,560, Cl. 428-325.000.
Masui, Shohei; Oishi, Kanemitsu; and Mitsui, Kiyoshi, 5,700,416, Cl. 204-325.000.

Ogino, Kazuya; Yokoyama, Kaneo; Hayashi, Narutoshi; Omura, Takashi; and Yamamoto, Setsuko, 5,700,296, Cl. 8-489.000.
Sumitomo Electric Industries, Ltd.: *See—*
Kukino, Satoru; Nakai, Tetsuo; Goto, Mitsuhiro; Yoshioka, Takashi; and Setoyama, Makoto, 5,700,551, Cl. 428-212.000.
Shigematsu, Masayuki; and Koyano, Yasushi, 5,701,188, Cl. 359-161.000.
Sumitomo Metal Industries, Ltd.: *See—*
Furugen, Munekatsu; Hamazaki, Shotaro; Kameoka, Norimasa; and Okamoto, Atsuhumi, 5,699,690, Cl. 72-69.000.
Sumitomo Pharmaceuticals Company, Limited: *See—*
Saito, Izumu; Kanegae, Yumi; and Nakai, Michio, 5,700,470, Cl. 424-233.100.
Sumitomo Sitix Corporation: *See—*
Izunome, Koji; Kawanishi, Souroku; Togawa, Shinji; Ikari, Atsushi; Sasaki, Hitoshi; and Kimura, Shigeyuki, 5,700,320, Cl. 117-19.000.
Sumitomo Wiring Systems, Ltd.: *See—*
Nakamura, Tokuji, 5,699,608, Cl. 29-747.000.
Sun Chemical Corporation: *See—*
Baumann, Harald; Dwars, Udo; Savariar-Hauck, Celin; and Timpe, Hans-Joachim, 5,700,619, Cl. 430-175.000.
Sun, Edward I.: *See—*
Logue, Daniel R.; Van Emmerik, Piet T.; Mann, Roger H.; Sun, Edward I.; Avalon, Gary A.; Caldwell, Carol A.; Chang, Eng-Pi; and Huskey, Richard A., 5,700,571, Cl. 428-352.000.
Sun, Kang: *See—*
Sargeant, Steven J.; Behan, Niall D.; Atherton, Dave; Yang, Sen; Huang, Miaoling; and Sun, Kang, 5,700,582, Cl. 430-476.600.
Sun Medical Co., Ltd.: *See—*
Zeng, Weiping; Yamamoto, Takashi; Arata, Masami; and Banba, Tsuyoshi, 5,700,875, Cl. 525-301.000.
Sun Microsystems, Inc.: *See—*
Arbouzov, Leonid M., 5,701,487, Cl. 395-704.000.
Harper, James M., 5,701,474, Cl. 395-621.000.
Joy, William N.; and van Hoff, Arthur A., 5,701,470, Cl. 395-614.000.
Malladi, Deviprasad; Hanson, Lee Frederick; and Kahahane, Jean, 5,701,085, Cl. 324-754.000.
Pun, Sherman S., 5,701,483, Cl. 395-681.000.
Safonov, Vladimir Olegovich, 5,701,490, Cl. 395-705.000.
Subramanyam, Shanti, 5,701,471, Cl. 395-616.000.
Wong, Thomas K.; and Tock, Theron D., 5,701,432, Cl. 395-457.000.
Sunds Defibrator Industries AB: *See—*
Forslund, Kjell, 5,700,086, Cl. 366-172.200.
Sundström, Erik, to Sandvik AB. Chain saw drive sprocket device. 5,699,619, Cl. 30-383.000.
Sung, Moo-Kyung, to SamSung Electronics Co., Ltd. Device for sensing the remaining amount of copy paper. 5,700,003, Cl. 271-110.000.
Super Group Co., Ltd.: *See—*
Lee, Chun-Te, 5,700,160, Cl. 439-578.000.
Suraniti, Silvestre; and Morin, Jean-Xavier, to GEC Alsthom Stein Industrie. Method and a device for monitoring the internal circulation in a fluidized bed reactor, and a reactor provided with such a device. 5,700,431, Cl. 422-139.000.
Surdi, Jean Marc, to Societe Nationale d'etude et de Construction de Moteurs d'Aviation SNECMA. Damper disposition mounted between rotor vanes. 5,700,133, Cl. 416-248.000.
SurVivaLink Corporation: *See—*
Brewer, James E.; Olson, Kenneth F.; Stolte, John F.; Utke, Nora J.; and Stendahl, Gary B., 5,700,281, Cl. 607-5.000.
Sutterlin, Philip H.: *See—*
Downey, Walter J.; Sutterlin, Philip H.; Stewart, J. Marcus; and Hurlbut, Amy O., 5,701,240, Cl. 363-35.000.
Suyama, Takayuki: *See—*
Shimada, Yuzo; Suyama, Takayuki; Tanaka, Yoshimasa; and Hasegawa, Shinichi, 5,699,610, Cl. 29-840.000.
Suzuki, Akito; and Ochiai, Tatsuo, to Nissan Motor Co., Ltd. CVT control system for vehicle drivetrain. 5,700,224, Cl. 477-45.000.
Suzuki Kabushiki Kaisha: *See—*
Kawasaki, Naoki; Ohta, Mitsuhiko; and Ikeya, Toshiaki, 5,699,777, Cl. 123-580.000.
Suzuki, Kazuhiro: *See—*
Yamashita, Shigeki; Hirayama, Yoshiyuki; and Suzuki, Kazuhiro, 5,701,505, Cl. 395-800.000.
Suzuki, Kazushige: *See—*
Ishikawa, Yuukou; Nishimoto, Noboru; Ootani, Michio; Tanibe, Tooru; Suzuki, Kazushige; and Kasahara, Kanesuke, 5,700,414, Cl. 264-247.000.
Suzuki, Masaaki: *See—*
Watanabe, Yasuyoshi; Suzuki, Masaaki; Hazato, Atsuo; and Langström, Bengt, 5,700,833, Cl. 514-510.000.
Suzuki, Masao; Saito, Koichi; and Nakata, Masahide, to NOF Corporation. Cosmetic compositions and an emulsion composition. 5,700,396, Cl. 252-309.000.
Suzuki, Masashi, to Kabushiki Kaisha TEC. Code reader and code reading method for reading code printed on surface of printing medium. 5,701,000, Cl. 235-462.000.
Suzuki, Norio: *See—*
Meguro, Satoshi; Uchibori, Kiyofumi; Suzuki, Norio; Motoyoshi, Makoto; Koike, Atsuyoshi; Yamanaka, Toshiaki; Sakai, Yoshio; Kaga, Toru; Hashimoto, Naotaka; Hashimoto, Takashi; Honjou, Shigeru; and Minato, Osamu, 5,700,705, Cl. 437-52.000.
Suzuki, Osamu: *See—*
Takenishi, Soichiro; Suzuki, Osamu; Yokomizo, Hirohiko; Ichihara, Tatsuo; Masuda, Gen; Nakajima, Namiko; and Komiya, Kazuko, 5,700,935, Cl. 544-139.000.
Suzuki, Seigo, to Kabushiki Kaisha Toshiba. Adiabatic MOS logic and power supplying method and apparatus. 5,701,093, Cl. 326-98.000.
Suzuki, Tadashi: *See—*
Hiroki, Toyohisa; and Suzuki, Tadashi, 5,700,415, Cl. 264-318.000.
Suzuki, Takashi: *See—*
Sakabe, Namiko; Ishimaru, Toshiaki; Kobayashi, Yoshiaki; and Suzuki, Takashi, 5,701,527, Cl. 396-277.000.
Suzuki, Tatsuya; and Miyazaki, Hiroaki, to Olympus Optical Co., Ltd. Moveable lens barrier for a camera which reduces camera size. 5,701,533, Cl. 396-349.000.
Svejkovsky, Paul. Drive mechanism for a linear motion conveyor. 5,699,897, Cl. 198-750.800.
Swarovski Jewelry U.S. Limited: *See—*
Cohen, Richard M., 5,699,901, Cl. 206-6.100.
Swass, Matthew J.: *See—*
Kurogi, Garrett Isao; and Swass, Matthew J., 5,699,611, Cl. 29-840.000.
Sweet, Richard G., to Becton Dickinson and Company. Flow sorter with video-regulated droplet spacing. 5,700,692, Cl. 436-50.000.
Sweet, Ronald W.: *See—*
Corrado, Frank C.; Fischer, James W.; Larsen, Gary R.; and Sweet, Ronald W., 5,699,738, Cl. 101-425.000.
Swenson, Roger, Sr. System for maintaining clutch pedal height after clutch resurfacing. 5,699,890, Cl. 192-110.00R.
Swimways Corporation: *See—*
Churchill, Robert Lee; and Geller, Douglas, 5,700,174, Cl. 441-65.000.
Swon, James E.: *See—*
Beckett, Arnold H.; Swon, James E.; and Hofer, Henry Z., 5,700,087, Cl. 366-241.000.
Sybase, Inc.: *See—*
Guillen, Juan; and Leask, James M., 5,701,485, Cl. 395-683.000.
Symbios Logic Inc.: *See—*
Gearhardt, Kevin J.; and Pruehsner, Darrell L., 5,701,309, Cl. 371-25.100.
Symbiosis Corporation: *See—*
Horton, Richard F., 5,701,200, Cl. 359-435.000.
Symtron Systems, Inc.: *See—*
Miller, Scott; Brady, Don; Williamson, Steven; Luftig, Steven; and Musto, Dominick, 5,700,141, Cl. 431-125.000.
Miller, Scott; Brady, Don; Williamson, Steven; Luftig, Steven; and Musto, Dominick, 5,700,142, Cl. 431-125.000.
Syntex (U.S.A.) Inc.: *See—*
Arzeno, Humberto B., 5,700,936, Cl. 544-276.000.
Synthetic Industries, Inc.: *See—*
Johnson, Randall Eugene; and Sparks, Marcus N., 5,700,111, Cl. 405-258.000.
Szarka, Laszlo J.: *See—*
Hanson, Ronald L.; Patel, Ramesh N.; and Szarka, Laszlo J., 5,700,669, Cl. 435-123.000.
Szekely, Istvan: *See—*
Hirth, Klaus Peter; Schwartz, Donna Pruess; Mann, Elaina; Shawver, Laura Kay; Keri, Gyorgi; Szekely, Istvan; Bajor, Tamas; Haimichael, Janis; Orfi, Laszlo; Levitzki, Alex; Gazit, Aviv; Ullrich, Axel; Lammers, Reiner; Kabbinavar, Fairooz F.; Slamon, Dennis; and Tang, Peng Cho, 5,700,822, Cl. 514-380.000.
Hirth, Klaus Peter; Schwartz, Donna Pruess; Mann, Elaine; Shawver, Laura Kay; Kéri, György; Székely, István; Bajor, Tamás; Haimichael, Janis; Orfi, László; Levitzki, Alex; Gazit, Aviv; Ullrich, Axel; and Lammers, Reiner, 5,700,823, Cl. 514-380.000.
Szekely, Julian: *See—*
Pal, Uday B.; and Szekely, Julian, 5,700,308, Cl. 75-10.100.
Szentpétery, Elemér: *See—*
Alesz, József; Busznyák, Imre; Glódi, István; Kiss, András; Kukta, Józsefné; Nagy, Béla; Salamon, Péter; Szentpétery, Elemér; Tóth, Zoltán; and Ujhelyi, Tamás, 5,700,957, Cl. 73-861.357.
Szigeti, Peter: *See—*
Krieg, Manfred; Weber, Christa; and Szigeti, Peter, 5,700,894, Cl. 526-323.200.
Tabb, David Leo, to Du Pont de Nemours, E. I., and Company. Co-curable base resistant fluoroelastomer blend composition. 5,700,866, Cl. 524-520.000.
Tabbane, Sami; and Moreau, Christophe, to France Telecom. Cell selection and reselection by mobile station in a multilayer cellular mobile radio network. 5,701,58[illegible], Cl. 455-33.400.
Taber, Jean A.: *See—*
Harrington, Steven J.; and Taber, Jean A., 5,701,401, Cl. 395-109.000.
Tachon, Pierre: *See—*
Chauffard, Francoise; Enslen, Mark Y. A.; and Tachon, Pierre, 5,700,484, Cl. 424-496.000.
Tada, Naosumi; and Sakamoto, Naoji, to Borg-Warner Automotive, K.K. Hydraulic tensioner with piston retention stop. 5,700,215, Cl. 474-110.000.
Tada, Osamu: *See—*
Oguma, Toshio; Okazaki, Yoshinobu; Tada, Osamu; and Yokotani, Shigeki, 5,701,443, Cl. 395-500.000.
Tadano, Toshio; Miike, Akira; and Umemoto, Jun, to Kyowa Medex Co., Ltd. Quantitative determination method for sodium ions. 5,700,652, Cl. 435-14.000.

Taffe, Norman P.; Douglass, Stephen M.; and Nazarian, Hagop, to Cypress Semiconductor Corp. OR array architecture for a programmable logic device. 5,701,092, Cl. 326-41.000.
Taguchi, Ichiro; and Inazuka, Masahiro, to Asahi Kogaku Kogyo Kabushiki Kaisha. Seal apparatus of finder. 5,701,534, Cl. 396-373.000.
Taguchi, Kohei; Ayada, Michihiko; and Shingu, Hideo, to NHK Spring Co., Ltd. Article made of a Ti-Al intermetallic compound, and method for fabrication of same. 5,701,575, Cl. 419-28.000.
Taguchi, Yoichi; Oishi, Akihiro; Shibuya, Isao; and Tsuchiya, Tohru, to Japan as represented by Director General of Agency of Industrial Science and Technology. 7-substituted-2-oxa[3.2.0]heptan-6-one compound and method for the preparation thereof. 5,700,931, Cl. 540-203.000.
Tahara, Shigenori: *See—*
Saito, Yasuo; Tahara, Shigenori; Yamada, Hiroyuki; and Hohkita, Atsushi, 5,699,768, Cl. 123-400.000.
Taiho Kogyo Co., Ltd.: *See—*
Shibata, Makoto; and Takahashi, Masao, 5,700,547, Cl. 428-167.000.
Taiwan Semiconductor Manufactured Company Ltd.: *See—*
Yu, Chen-Hua; and Jang, Syun-Ming, 5,700,737, Cl. 438-636.000.
Taiwan Semiconductor Manufacturing Company Ltd: *See—*
Chen, Chien-Feng; and Wang, Huan Wen, 5,700,740, Cl. 438-710.000.
Chiang, An-Min; and Yeh, Wei-Kun, 5,700,739, Cl. 438-655.000.
Huang, Yung-Sheng; and Tsai, Nun-Sian, 5,700,726, Cl. 437-643.000.
Lee, Jian-Huei; Yen, Ying-Tzu; and Peng, Ping-Hui, 5,700,729, Cl. 438-230.000.
Liang, Wen-Sheng, 5,699,916, Cl. 206-710.000.
Shiue, Ruey-Yun; Wu, Wen-Teng; Shieh, Pi-Chen; and Liu, Chin-Kai, 5,700,735, Cl. 438-612.000.
Yeh, Ching Hua; and Chen, Shun-Long, 5,701,174, Cl. 356-237.000.
Tajik, Abdul Jamil: *See—*
Seward, James Bernard; and Tajik, Abdul Jamil, 5,699,805, Cl. 128-662.000.
Tajima, Hiroshi, to Sony Corporation. Digital tape recorder having sync detection based on a correlation between extracted sync and id fields. 5,701,212, Cl. 360-51.000.
Takabatake, Yosinobu: *See—*
Kaji, Masanori; Ono, Masayosi; Takabatake, Yosinobu; Kaido, Yosinori; Haga, Takahiro; and Hikosaka, Masaru, 5,701,067, Cl. 320-2.000.
Takada, Yutaka: *See—*
Notsu, Ikurou; Matsuda, Hiroshi; Hamazaki, Nobuo; Takada, Yutaka; Miyata, Tatsuji; and Nakamura, Akira, 5,699,767, Cl. 123-323.000.
Takagawa, Makoto: *See—*
Hashimoto, Toshihiro; Nakamura, Kenichi; and Takagawa, Makoto, 5,700,944, Cl. 546-327.000.
Takagawa, Nobuyuki. Thermos bottle. 5,699,841, Cl. 141-331.000.
Takagi, Hiroshi: *See—*
Fujii, Takashi; Shinmura, Satoru; Fujino, Masaru; Mizuno, Shinobu; Sekijima, Takenori; Chikagawa, Osamu; and Takagi, Hiroshi, 5,701,108, Cl. 333-202.000.
Takagi, Mikio: *See—*
Hamada, Kenji; Kirihata, Toshinori; Kamikubo, Keita; Takagi, Mikio; Nakamura, Masami; Narahara, Youzaburo; and Kawasaki, Koichi, 5,699,656, Cl. 56-11.100.
Takahashi, Akira: *See—*
Hiwatashi, Yutaka; Matsuno, Koji; Takahashi, Akira; and Matsuura, Munenori, 5,700,073, Cl. 303-146.000.
Takahashi, Hideaki, to Olympus Optical Co., Ltd. Optical data reproducing apparatus. 5,701,285, Cl. 369-59.000.
Takahashi, Katsuhiko: *See—*
Kurbayashi, Yutaka; Shirota, Katsuhiro; and Takahashi, Katsuhiko, 5,700,314, Cl. 106-31.270.
Takahashi, Koichi, to Olympus Optical Co., Ltd. Head or face mounted image display apparatus. 5,701,202, Cl. 359-631.000.
Takahashi, Masao: *See—*
Shibata, Makoto; and Takahashi, Masao, 5,700,547, Cl. 428-167.000.
Takahashi, Mitsuru: *See—*
Bisaiji, Takashi; Yu, Hideo; Kawaishi, Yasunori; Motohashi, Toshiaki; Takahashi, Mitsuru; and Kamiyama, Hideki, 5,701,566, Cl. 399-302.000.
Takahashi, Ryoji: *See—*
Iwata, Masuo; Seki, Mika; Inoue, Kouji; Takahashi, Ryoji; Fukumura, Tikashi; and Tanaka, Masaya, 5,700,575, Cl. 428-403.000.
Takahashi, Shigeru: *See—*
Ikeda, Shuji; Meguro, Satoshi; Hashiba, Soichiro; Kuramoto, Isamu; Koike, Atsuyoshi; Sasaki, Katsuro; Ishibashi, Koichiro; Yamanaka, Toshiaki; Hashimoto, Naotaka; Moriwaki, Nobuyuki; Takahashi, Shigeru; Hiraishi, Atsushi; Kobayashi, Yutaka; and Yukutake, Seigou, 5,700,704, Cl. 437-52.000.
Takahashi, Taro: *See—*
Maeda, Hirokazu; Furuta, Hitoshi; Takahashi, Taro; Takei, Chiemi; Kurita, Hiroko; and Sato, Yoko, 5,700,397, Cl. 252-312.000.
Takai, Yukie: *See—*
Yamagishi, Masahiro; Ueda, Makoto; Takai, Yukie; Yasuda, Mari; and Mikawa, Takashi, 5,700,670, Cl. 435-128.000.
Takami, Akihide: *See—*
Kyogoku, Makoto; Iwakuni, Hideharu; and Takami, Akihide, 5,700,747, Cl. 502-66.000.
Takami, Masato: *See—*
Yano, Masami; and Takami, Masato, 5,700,362, Cl. 205-191.000.
Takano, Isamu, to NEC Corporation. Prescaler IC test method capable of executing alternate current test by the use of IC tester for direct current test. 5,701,087, Cl. 324-765.000.
Takano, Kazuya, to Bridgestone Corporation. Elastic coupling with shaped elastic members for setting a circumferential/axial elasticity ratio. 5,700,198, Cl. 464-71.000.
Takano, Yutaka: *See—*
Katsumata, Ryoichi; and Takano, Yutaka, 5,700,661, Cl. 435-69.100.
Takasaki, Toshiharu: *See—*
Hara, Tomoyuki; Tobita, Kenichi; Niimi, Tsutomu; Amemiya, Izumi; and Takasaki, Toshiharu, 5,699,871, Cl. 180-247.000.
Takashige, Masao: *See—*
Tanaka, Kenichi; and Takashige, Masao, 5,700,091, Cl. 383-63.000.
Takashima, Youichi; Ishii, Shinji; and Yamanaka, Kiyoshi, to Nippon Telegraph & Telephone Corporation. Method and system for digital information protection. 5,701,343, Cl. 380-4.000.
Takata, Akira; Hikawa, Tetsuo; Sawada, Takashi; Yiu, Tom Dang-hsing; and Ni, Ful-Long, to Mega Chips Corporation; and Yiu, Tom Dang-hsing. Semiconductor device. 5,700,975, Cl. 174-52.400.
Takata, Shinichi: *See—*
Miyamoto, Kazuki; Ohki, Naoyuki; Nakano, Masaki; Ushiro, Takahiro; Fukazu, Yasuo; Chaki, Atsushi; Takata, Shinichi; and Ohyoshi, Kazuhiro, 5,701,402, Cl. 395-115.000.
Takato, Hideyasu, to Olympus Optical Co., Ltd. Real image mode variable magnification finder optical system. 5,701,199, Cl. 359-432.000.
Takatsu, Kazumasa; Kurokawa, Takashi; Echizen, Hiroshi; Koganei, Akio; Sugiyama, Shuichiro; and Adachi, Toshio, to Canon Kabushiki Kaisha. Microwave plasma processing apparatus. 5,700,326, Cl. 118-723.0MW.
Takayanagi, Yasuyuki: *See—*
Shimizu, Shigeru; Saitoh, Takashi; Uzawa, Masashi; and Takayanagi, Yasuyuki, 5,700,399, Cl. 252-500.000.
Takechi, Kenjiro; Ishigaki, Yasuhiro; and Kojo, Hitomi, to Yamaha Corporation. Racket frame and process for producing the same. 5,700,210, Cl. 473-535.000.
Takeda Chemical Industries, Ltd.: *See—*
Iga, Katsumi; Yanai, Shigeo; Okabe, Keiichiro; and Itoh, Masaki, 5,700,481, Cl. 424-449.000.
Natsugari, Hideaki; Ikeda, Hitoshi; Ishimaru, Takenori; and Doi, Takayuki, 5,700,810, Cl. 514-307.000.
Toyoshima, Kumao; Horiuchi, Ryuya; Yamauchi, Kiyoshi; Yamamoto, Tadashi; and Igarashi, Koichi, 5,700,678, Cl. 435-233.000.
Takeda, Sunao: *See—*
Motogi, Jun; Sakai, Yoshio; and Takeda, Sunao, 5,699,807, Cl. 128-677.000.
Takeda, Yukiko; Tanabe, Shiro; and Wakayama, Kazuko, to Hitachi, Ltd. Telecommunications service control method in intelligent network. 5,701,412, Cl. 395-200.010.
Takei, Chiemi: *See—*
Maeda, Hirokazu; Furuta, Hitoshi; Takahashi, Taro; Takei, Chiemi; Kurita, Hiroko; and Sato, Yoko, 5,700,397, Cl. 252-312.000.
Takei, Seiji, to Nippon Thompson Co., Ltd. Linear direct current motor. 5,701,042, Cl. 310-12.000.
Takeichi, Hideo; Ozawa, Yoichi; Aoki, Sei; and Shimizu, Takashi, to Bridgestone Corporation. Alkoxysilane-modified polymer and adhesive composition using said polymer. 5,700,874, Cl. 525-288.000.
Takemoto, Takatoshi; and Kawashima, Kazunari, to Kabushiki Kaisha Ace Denken. Game play media dispenser. 5,700,997, Cl. 235-1.00B.
Takenishi, Soichiro; Suzuki, Osamu; Yokomizo, Hirohiko; Ichihara, Tatsuo; Masuda, Gen; Nakajima, Namiko; and Komiya, Kazuko, to Nisshinbo Industries, Inc. Carbodiimide derivative. 5,700,935, Cl. 544-139.000.
Takesawa, Shingo; Hosoya, Noriyuki; and Sasaki, Masatomi, to Terumo Kabushiki Kaisha. Dialyzer with a constricted part made of a material capable of swelled by dializing liquid. 5,700,372, Cl. 210-321.810.
Takeuchi, Akira: *See—*
Kikuchi, Katsuhide; Hayashi, Hitoshi; Takeuchi, Akira; and Takigawa, Kenji, 5,700,392, Cl. 252-299.010.
Takeuchi, Kunihiko: *See—*
Sho, Katsuhiko; Shibata, Yasuhiro; Ishii, Keizou; Imamura, Tsuyoshi; and Takeuchi, Kunihiko, 5,700,862, Cl. 524-403.000.
Takeuchi, Takeshi, to NEC Corporation. Waveguide type semiconductor photodetecting device and fabrication process therefor. 5,701,379, Cl. 385-131.000.
Takigawa, Kenji: *See—*
Kikuchi, Katsuhide; Hayashi, Hitoshi; Takeuchi, Akira; and Takigawa, Kenji, 5,700,392, Cl. 252-299.010.
Takiguchi, Osamu; Hori, Naomi; and Oda, Takashi, to Kao Corporation. Film-forming resin and hair cosmetic composition containing the same. 5,700,892, Cl. 526-306.000.
Takiguchi, Tsuyoshi; Okado, Kenji; Taya, Masaaki; Fujita, Ryoichi; Kanbayashi, Makoto; Iida, Wakashi; and Ida, Tetsuya, to Canon Kabushiki Kaisha. Toner for developing electrostatic images and charge-controlling agent. 5,700,617, Cl. 430-110.000.
Takishima, Suguru: *See—*
Yamamoto, Hiroshi; Takishima, Suguru; and Shinozaki, Shimpei, 5,701,216, Cl. 360-99.020.
Takita, Yusaku: *See—*
Shiomitsu, Tohru; Manabe, Yasuhiko; Ogawa, Takashi; Takita, Yusaku; and Ishihara, Tatsumi, 5,700,361, Cl. 204-491.000.
Takubo, Takefumi: *See—*
Hori, Kenjiro; Akiyama, Satoshi; Takubo, Takefumi; and Kishida, Tetsuo, 5,701,182, Cl. 358-296.000.

Takuma, Yasuo, to Hitachi, Ltd.; and Hitachi Koki Co., Ltd. Image forming apparatus employing residual toner recovery scheme. 5,701,570, Cl. 399-343.000.
Tam, Johann: *See—*
Van Doren, Matthew J.; Sauer, Don; Slocum, Alexander H.; Rocki, David Pap; Tam, Johann; and Gerszewski, Larry, 5,700,046, Cl. 294-119.100.
Tam, Nelson N.: *See—*
Dao, Giang T.; Tam, Nelson N.; Liu, Gang; and Farnsworth, Jeffrey N., 5,700,602, Cl. 430-5.000.
Tamagnan, Gilles: *See—*
Neumeyer, John L.; Tamagnan, Gilles; and Gao, Yigong, 5,700,446, Cl. 424-1.850.
Tamarack Products, Inc.: *See—*
Steidinger, Donald J., 5,700,536, Cl. 428-40.100.
Tamir, Yoav: *See—*
Weinbaum, David; Bar-On, Daniel; and Tamir, Yoav, 5,701,139, Cl. 345-145.000.
Tamura, Hiroshi: *See—*
Yamauchi, Satoshi; Tamura, Hiroshi; Kataoka, Takashi; Tsumura, Naoki; Hikichi, Naoto; Narumi, Chihiro; Ezaki, Takashi; Kudo, Shozo; and Ooguro, Yoshihisa, 5,701,497, Cl. 395-753.000.
Tamura, Osamu: *See—*
Kasuya, Takashige; Tamura, Osamu; Yusa, Hiroshi; Kobori, Takakuni; and Katada, Masaichiro, 5,700,616, Cl. 430-110.000.
Tanabe, Hideo: *See—*
Taniyama, Akira; Morijiri, Makoto; Tanaka, Haruko; Yuito, Isamu; Ashida, Eiji; Koyanagi, Hiroaki; Tanabe, Hideo; and Kobayashi, Tetsuo, 5,701,221, Cl. 360-113.000.
Tanabe, Kazuhiro: *See—*
Eto, Yoshizumi; Murata, Nobuo; Tanabe, Kazuhiro; and Nisikawa, Hiroyuki, 5,701,581, Cl. 455-5.100.
Tanabe, Shiro: *See—*
Takeda, Yukiko; Tanabe, Shiro; and Wakayama, Kazuko, 5,701,412, Cl. 395-200.010.
Tanabe, Tsuneo, to Mitsubishi Denki Kabushiki Kaisha. Fuel controller for internal combustion engine. 5,699,771, Cl. 123-479.000.
Tanaka, Haruko: *See—*
Taniyama, Akira; Morijiri, Makoto; Tanaka, Haruko; Yuito, Isamu; Ashida, Eiji; Koyanagi, Hiroaki; Tanabe, Hideo; and Kobayashi, Tetsuo, 5,701,221, Cl. 360-113.000.
Tanaka, Hiroshi; Fujita, Toru; and Ishiwatari, Tahei, to Seiko Epson Corporation. Fixing apparatus having controller for setting a target temperature and for estimating the amount of heat transferred to a pressure roller. 5,701,554, Cl. 399-69.000.
Tanaka, Hitoshi: *See—*
Sato, Norio; and Tanaka, Hitoshi, 5,701,208, Cl. 359-822.000.
Tanaka, Kazumi: *See—*
Miyazaki, Takeshi; Tanaka, Kazumi; Saito, Tsuyoshi; Ohnishi, Toshikazu; Fukui, Tetsuro; and Okamoto, Tadashi, 5,700,647, Cl. 435-6.000.
Tanaka, Kenichi; and Takashige, Masao, to Idemitsu Petrochemical Co., Ltd. Snap fastener and a bag for packaging with a snap fastener. 5,700,091, Cl. 383-63.000.
Tanaka, Masaya: *See—*
Iwata, Masuo; Seki, Mika; Inoue, Kouji; Takahashi, Ryoji; Fukumura, Tikashi; and Tanaka, Masaya, 5,700,575, Cl. 428-403.000.
Tanaka, Minoru; and Hui, Chi Wai, to Mitsubishi Chemical Corporation. Fluidized-bed reactor and a temperature-controlling method for the fluidized-bed reactor. 5,700,432, Cl. 422-146.000.
Tanaka, Toyoaki: *See—*
Kimura, Fujimi; Tanaka, Toyoaki; Dobashi, Akihiko; and Abe, Takashi, 5,700,381, Cl. 216-22.000.
Tanaka, Tsuyoshi: *See—*
Ikeo, Joji; Ozaki, Masaharu; Tanaka, Tsuyoshi; Itonori, Katsuhiko; and Ishida, Yuusuke, 5,701,500, Cl. 395-779.000.
Tanaka, Yasuo: *See—*
Kanazawa, Masaharu; Natsuhara, Toshiya; Hara, Kazuyoshi; and Tanaka, Yasuo, 5,701,569, Cl. 399-308.000.
Tanaka, Yoshiharu; Tanii, Junichi; and Ono, Katsuhiro, to Minolta Co., Ltd. Film feeding device. 5,701,531, Cl. 396-319.000.
Tanaka, Yoshimasa: *See—*
Shimada, Yuzo; Suyama, Takayuki; Tanaka, Yoshimasa; and Hasegawa, Shinichi, 5,699,610, Cl. 29-840.000.
Tang, Alex, to United Microelectronics Corporation. High-speed image register for graphics display. 5,701,144, Cl. 345-188.000.
Tang, Alex; and Chu, Frank, to United Microelectronics Corp. Generating multilayered pictures by image parameters. 5,701,445, Cl. 395-516.000.
Tang, John G.; Gallatin, David M.; and Baik, David J., to Apple Computer, Inc. Sliding protection door for covering one or both of a pair of mutually exclusive electrical connectors. 5,701,232, Cl. 361-683.000.
Tang, Peng Cho: *See—*
Hirth, Klaus Peter; Schwartz, Donna Pruess; Mann, Elaina; Shawver, Laura Kay; Keri, Gyorgi; Szekely, Istvan; Bajor, Tamas; Haimichael, Janis; Orfi, Laszlo; Levitzki, Alex; Gazit, Aviv; Ullrich, Axel; Lammers, Reiner; Kabbinavar, Fairooz F.; Slamon, Dennis; and Tang, Peng Cho, 5,700,822, Cl. 514-380.000.
Tang, Sanh, to Micron Technology, Inc. Integrated circuitry with interconnection pillar. 5,701,036, Cl. 257-750.000.
Tani, Takahiro, to Mitsubishi Denki Kabushiki Kaisha; and Mitsubishi Electric Semiconductor Software Co., Ltd. Switch level simulation system. 5,701,254, Cl. 364-489.000.
Tanibe, Tooru: *See—*
Ishikawa, Yuukou; Nishimoto, Noboru, Ootani, Michio; Tanibe, Tooru; Suzuki, Kazushige; and Kasahara, Kanesuke, 5,700,414, Cl. 264-247.000.
Taniguchi, Hiroya: *See—*
Kuboyama, Kimimasa; Yokoyama, Shoji; Miyakoshi, Yoshinori; Taniguchi, Hiroya; Tsuruta, Kazuhiro; and Goto, Hisashi, 5,699,655, Cl. 53-540.000.
Taniguchi, Tadatsugu; Muramatsu, Masami; Sugano, Haruo; Matsui, Hiroshi; Kashima, Nobukazu; and Hamuro, Junji, to Ajinomoto Co., Inc.; and Japanese Foundation for Cancer Research. Unglycosylated human interleukin-2 polypeptides. 5,700,913, Cl. 530-351.000.
Tanii, Junichi: *See—*
Tanaka, Yoshiharu; Tanii, Junichi; and Ono, Katsuhiro, 5,701,531, Cl. 396-319.000.
Tanimoto, Michio: *See—*
Kurimoto, Ikuo; Kawajiri, Tatsuya; Onodera, Hideo; Tanimoto, Michio; and Aoki, Yukio, 5,700,752, Cl. 502-311.000.
Taninaka, Masumi: *See—*
Ogihara, Mitsuhiko; Nakamura, Yukio; Koizumi, Masumi; and Taninaka, Masumi, 5,700,714, Cl. 437-167.000.
Taniyama, Akira; Morijiri, Makoto; Tanaka, Haruko; Yuito, Isamu; Ashida, Eiji; Koyanagi, Hiroaki; Tanabe, Hideo; and Kobayashi, Tetsuo, to Hitachi, Ltd. Magnetoresistive thin-film magnetic head and method of fabrication thereof. 5,701,221, Cl. 360-113.000.
Tanji, Yoshihiko: *See—*
Ohmori, Koichi; Yamamoto, Toshiyoshi; Matsuda, Yuji; Tanji, Yoshihiko; and Yuuzu, Takayoshi, 5,701,011, Cl. 250-370.090.
Tanttu, Markku: *See—*
Nikkanen, Samuli; and Tanttu, Markku, 5,699,746, Cl. 110-348.000.
Tao, Weng; Corbett, Martin John; and Pickett, Walter C., to American Cyanamid Company. Bovine serum and bovine IgG as preventives and therapeutives for bovine mastitis. 5,700,465, Cl. 424-130.100.
Tara, Vinai Ming: *See—*
Rath, James; Tran, William Luong-Gia; Flynn, Kathy M.; Tara, Vinai Ming; Koes, Thomas A.; and Nizzo, Vincent J., 5,700,607, Cl. 430-15.000.
Tarascon, Jean-Marie: *See—*
Denis, Sophie; Orsini, Francois; Tarascon, Jean-Marie; and Touboul, Marcel, 5,700,598, Cl. 429-218.000.
Tarbox, Eleanor Joan, to Pirelli General plc. Optical structures with two optical guidance paths. 5,701,378, Cl. 385-126.000.
Tarchini, Marcello: *See—*
Stein, Götz; McEvoy, Noel; Lehmann, Ernst; and Tarchini, Marcello, 5,699,735, Cl. 101-219.000.
Target Therapeutics, Inc.: *See—*
Mirigian, Gregory E.; Van, Nga Thi; and Gia, Son M., 5,700,258, Cl. 606-1.000.
Tarkett AG: *See—*
Lundquist, Eskil, 5,700,865, Cl. 524-506.000.
Tartaglia, Joseph M.; Loeffler, Joseph P.; and Turnlund, Todd H., to Advanced Cardiovascular Systems, Inc. Polymer film for wrapping a stent structure. 5,700,286, Cl. 623-1.000.
Tatsu, Haruyoshi: *See—*
Yamamoto, Yuichi; Tatsu, Haruyoshi; Alexeevna, Volkova Margarita; Vasilyevich, Sokolov Sergey; and Vladimirovich, Veretennikov Nikolai, 5,700,879, Cl. 525-353.000.
Tatsumi, Kiyoshi: *See—*
Murakami, Mototake; Aoe, Seiichiro; and Tatsumi, Kiyoshi, 5,700,509, Cl. 426-495.000.
Taube, Wolfgang: *See—*
Kürten, Heribert; Radtke, Uwe; Taube, Wolfgang; and Vollmar, Horst, 5,699,666, Cl. 60-652.000.
Tay, Siew Choon: *See—*
Yong, Dennis; Cheng, Viktor Choong-Hung; Lim, Lint; and Tay, Siew Choon, 5,701,466, Cl. 395-611.000.
Taya, Masaaki: *See—*
Takiguchi, Tsuyoshi; Okado, Kenji; Taya, Masaaki; Fujita, Ryoichi; Kanbayashi, Makoto; Iida, Wakashi; and Ida, Tetsuya, 5,700,617, Cl. 430-110.000.
Taylor, Carol M.: *See—*
Kahne, Daniel E.; Goodnow, Robert A., Jr.; Taylor, Carol M.; and Yan, Lin, 5,700,916, Cl. 536-1.110.
Taylor, Robert D., to Morton International, Inc. Preparing consolidated thermite compositions. 5,700,974, Cl. 149-109.600.
TDK Corporation: *See—*
Kimura, Fujimi; Tanaka, Toyoaki; Dobashi, Akihiko; and Abe, Takashi, 5,700,381, Cl. 216-22.000.
Utsunomiya, Hajime, 5,700,567, Cl. 428-332.000.
TDW Delaware, Inc.: *See—*
Rankin, William Jack, 5,699,577, Cl. 15-104.061.
Tecnol Medical Products, Inc.: *See—*
Reese, George D.; Rich, Albert R., Jr.; and Brunson, Kevin K., 5,699,792, Cl. 128-206.190.
Tedea-Huntleigh International, Ltd.: *See—*
Neuman, Eli, 5,700,982, Cl. 177-229.000.

Teder, Rein S. Projectile motion parameter determination device using successive approximation and high measurement angle speed sensor. 5,700,204, Cl. 473-199.000.
Teijin Seiki Co., Ltd.: *See—*
Fukui, Kiyozumi, 5,699,604, Cl. 29-564.000.
Teikoku Hormone Mfg. Co., Ltd.: *See—*
Iga, Katsumi; Yanai, Shigeo; Okabe, Keiichiro; and Itoh, Masaki, 5,700,481, Cl. 424-449.000.
Tekonsha Engineering Company: *See—*
Austin, Barry G., 5,700,068, Cl. 303-24.100.
Tektronix, Inc.: *See—*
Baker, Clifford E., 5,701,073, Cl. 324-117.00H.
Banning, Jeffery H.; and Bui, Loc V., 5,700,851, Cl. 523-161.000.
Telecommunications Equipment Corporation: *See—*
Wong, Thomas T. Y., 5,701,591, Cl. 455-63.000.
Telect, Inc.: *See—*
Larson, Glen M.; and Mayberry, Terry R., 5,701,380, Cl. 385-134.000.
Teleflex Incorporated: *See—*
Petruccello, John P.; and Reasoner, Michael, 5,699,697, Cl. 74-502.600.
Telefonakteibolaget LM Ericsson: *See—*
Diachina, John Walter; and Andersson, Håkan Clas, 5,701,298, Cl. 370-346.000.
Telefonaktiebolaget LM Ericsson: *See—*
Kallin, Harald; and Fallgren, Anna, 5,701,585, Cl. 455-33.200.
Kallin, Harald; and Bodin, Roland, 5,701,592, Cl. 455-69.000.
Silver, Andrew; and Stamos, Stamos, 5,701,337, Cl. 379-57.000.
Ward, Torbjorn; and Sandell, Anders, 5,701,294, Cl. 370-252.000.
Temper Corporation: *See—*
Rode, John E., 5,699,706, Cl. 83-18.000.
Temple University - Of The Commonwealth System of Higher Education: *See—*
Suhadolnik, Robert J.; and Pfleiderer, Wolfgang, 5,700,785, Cl. 514-44.000.
Tenfelde, Bernd: *See—*
Banemann, Reiner; Tenfelde, Bernd; and Wibbeling, Reinhard, 5,700,196, Cl. 464-36.000.
Teng, Ganghui: *See—*
Jones, Frank N.; Du, Cong; Teng, Ganghui; Dimian, Adel F.; and Wang, Daozhang, 5,700,882, Cl. 525-440.000.
Tensor, Paul M., to Dana Corporation. Rubber/metal combustion seal. 5,700,015, Cl. 277-180.000.
Tensor, Paul M., to Dana Corporation. Flanged rubber combustion seal. 5,700,017, Cl. 277-235.00B.
Terada, Norihiro: *See—*
Shima, Masaki; and Terada, Norihiro, 5,700,467, Cl. 136-249.000.
Teraguchi, Nobuaki, to Sharp Kabushiki Kaisha. Electrode structure and method for fabricating the same. 5,701,035, Cl. 257-747.000.
Terasaka, Kiyotaro: *See—*
Tomihashi, Nobuyuki; and Terasaka, Kiyotaro, 5,700,861, Cl. 524-344.000.
Terasawa, Tsuneo: *See—*
Hasegawa, Norio; Terasawa, Tsuneo; Fukuda, Hiroshi; Hayano, Katsuya; Imai, Akira; Moniwa, Akemi; and Okazaki, Shinji, 5,700,601, Cl. 430-5.000.
Terui, Nobuhiko, to Nikon Corporation. Camera shake amplitude detecting device. 5,701,522, Cl. 396-53.000.
Terumo Kabushiki Kaisha: *See—*
Takesawa, Shingo; Hosoya, Noriyuki; and Sasaki, Masatomi, 5,700,372, Cl. 210-321.810.
Texas Instruments Incorporated: *See—*
Bonneau, Walt C., Jr.; Guttag, Karl; and Gove, Robert, 5,701,507, Cl. 395-800.000.
Hill, Darrell; Fan, Shou-Kong; and Khatibzadeh, Ali, 5,700,701, Cl. 437-31.000.
Magel, Gregory A.; and Boysel, Robert M., 5,701,372, Cl. 385-24.000.
Moslehi, Mehrdad M., 5,700,628, Cl. 430-313.000.
Sharpe, Claude Andrew, 5,701,127, Cl. 342-42.000.
Whetsel, Lee D., 5,701,307, Cl. 371-22.300.
Textilmaschinenfabrik Dr. Ernst Fehrer Aktiengesellschaft: *See—*
Feyerl, Günther, 5,699,595, Cl. 28-107.000.
Thackeray, James W.; Sinta, Roger F.; Denison, Mark D.; and Ablaza, Sheri L., to Shipley Company, L.L.C. Positive acid catalyzed resists having an alkali soluble resin with acid labile groups and inert blocking groups. 5,700,624, Cl. 430-270.100.
Thayer, Bruce E.: *See—*
Behe, Thomas J.; Gilmore, Daniel R., III; and Thayer, Bruce E., 5,701,572, Cl. 399-354.000.
Thermo King Corporation: *See—*
Jurewicz, Romuald Martin; and Viegas, Herman H., 5,699,670, Cl. 62-50.300.
Thero, Christine: *See—*
Huang, Jenn-Hwa; Thero, Christine; and Shiralagi, Kumar, 5,700,703, Cl. 437-40.000.
Therrien, Marc: *See—*
Rubin, Gerry; Therrien, Marc; Chang, Henry; Karim, Felix; and Wassarman, David, 5,700,675, Cl. 435-194.000.
Thetford, Dean; and Schofield, John David, to Zeneca Limited. Dispersants. 5,700,395, Cl. 252-309.000.
Thewes, Roland: *See—*
Weber, Werner; Kuehn, Stefan; Kleiner, Michael; and Thewes, Roland, 5,701,037, Cl. 257-777.000.
Thiele GmbH & Co. KG: *See—*
Materne, Kurt André; Philipp, Guenther; and Muelle, Wilhelm, 5,699,895, Cl. 198-731.000.
Thieler, Stephen Max: *See—*
Bales, Bruce Merrill; and Thieler, Stephen Max, 5,701,295, Cl. 370-271.000.
Thieroff-Ekerdt, Ruth: *See—*
Steinmeyer, Andreas; Neef, Gunter; Kirsch, Gerald; Schwarz, Katica; Thieroff-Ekerdt, Ruth; Wiesinger, Herbert; and Haberey, Martin, 5,700,791, Cl. 514-167.000.
Thill, Kevin Michael; and Walthers, Dwight David, to Motorola, Inc. Self phased antenna element with dielectric and associated method. 5,701,130, Cl. 343-895.000.
Thomas, Barbara; and Wisniewski, Karen, to Colgate-Palmolive Co. Thickened cleaning composition. 5,700,331, Cl. 134-29.000.
Thomas, James W.: *See—*
Weinberg, Richard S.; and Thomas, James W., 5,700,401, Cl. 261-27.000.
Thomas, Matthew M.: *See—*
Jacobs, Jack H.; Thomas, Matthew M.; Grosskrueger, Duane D.; Carpenter, Bernie F.; and Perry, Alan R., 5,700,337, Cl. 156-64.000.
Thomas, Rickey James: *See—*
Stone, Paul Andrew; and Thomas, Rickey James, 5,700,113, Cl. 408-1.00R.
Thompson, Andrew M., to Arco Chemical Technology, L.P. Molded polyurethane foam with enhanced physical properties. 5,700,847, Cl. 521-159.000.
Thompson, Clarence. Mouthpiece for endotracheal tube. 5,699,787, Cl. 128-200.260.
Thompson, Ken J.; Everhart, John R.; Foster, Wayne G.; and Rosenquist, Joel C., to Sara Lee Corporation. Automatic sleeve invertor. 5,699,942, Cl. 223-42.000.
Thompson-Bell, Ian: *See—*
Beadman, Michael Andrew; and Thompson-Bell, Ian, 5,700,098, Cl. 400-615.200.
Thomson Consumer Electronics S.A.: *See—*
Huq, Ruquiya Ismat Ara; and Dingwall, Andrew Gordon Francis, 5,701,136, Cl. 345-100.000.
Thomson, Jack Gall, to Dover Corp. Breakaway coupling. 5,699,823, Cl. 137-68.150.
Thornquist, Lennart: *See—*
Pylkkanen, Matti; and Thornquist, Lennart, 5,699,919, Cl. 209-518.000.
Thorson, Gregory M.; and Scott, Steven L., to Cray Research, Inc. Adaptive routing mechanism for torus interconnection network. 5,701,416, Cl. 395-200.150.
Thul, Alfons, to American Standard, Inc. Handle for a sanitary fitting. 5,699,587, Cl. 16-114.00R.
Thurber, Steven Mark: *See—*
Arndt, Richard Louis; Nicholson, James Otto; Silha, Edward John; Thurber, Steven Mark; and Youngs, Amy May, 5,701,495, Cl. 395-736.000.
Tidman, Derek A. Method of and apparatus for moving a mass. 5,699,779, Cl. 124-6.000.
Tiebel, Rainer: *See—*
Ahrens, Harald; Tiebel, Rainer; and Ziefle, Rainer, 5,699,742, Cl. 101-467.000.
Tiedje, Kevin Mark: *See—*
BeMent, Bradley Earl; Tiedje, Kevin Mark; and Crawford, Robert Dennis, 5,701,410, Cl. 395-183.190.
Timberjack Corporation: *See—*
Hudson, Thomas H., 5,699,712, Cl. 83-928.000.
Timko, Mark A., to Intel Corporation. Apparatus and method for addition based on Kogge-Stone parallel algorithm. 5,701,504, Cl. 395-800.000.
Timpe, Hans-Joachim: *See—*
Baumann, Harald; Dwars, Udo; Savariar-Hauck, Celin; and Timpe, Hans-Joachim, 5,700,619, Cl. 430-175.000.
Tinen, William J.; Singal, Pawan; Hooper, Douglas; and Wendt, Alan C., to USG Interiors, Inc. Suspension ceiling with integrated openings. 5,699,641, Cl. 52-506.070.
Tippmann, Joseph R.; and Tippmann, Vincent P. Insulative adaptor for a steam table pan. 5,699,784, Cl. 126-33.000.
Tippmann, Vincent P.: *See—*
Tippmann, Joseph R.; and Tippmann, Vincent P., 5,699,784, Cl. 126-33.000.
Titan Specialties, Inc.: *See—*
Mosley, Demmie L., 5,700,969, Cl. 102-313.000.
Tobita, Kenichi: *See—*
Hara, Tomoyuki; Tobita, Kenichi; Niimi, Tsutomu; Amemiya, Izumi; and Takasaki, Toshiharu, 5,699,871, Cl. 180-247.000.
Tock, Theron D.: *See—*
Wong, Thomas K.; and Tock, Theron D., 5,701,432, Cl. 395-457.000.
Todd, Kevin B.: *See—*
Simpson, Roger T.; and Todd, Kevin B., 5,700,213, Cl. 474-110.000.
Togawa, Shinji: *See—*
Izunome, Koji; Kawanishi, Souroku; Togawa, Shinji; Ikari, Atsushi; Sasaki, Hitoshi; and Kimura, Shigeyuki, 5,700,320, Cl. 117-19.000.
Tohda, Takao: *See—*
Okajima, Michio; and Tohda, Takao, 5,700,591, Cl. 428-690.000.
Tohoku Ricoh Co., Ltd.: *See—*
Satoh, Mitsuyoshi; Numabe, Hideo; and Matsuda, Hideaki, 5,700,096, Cl. 400-225.000.

Tokico Ltd.: *See—*
Uchiyama, Masaaki, 5,701,246, Cl. 364-424.047.
Tokiyama, Masaru: *See—*
Brannan, Michael H.; Garcia, Jorge Luis; Nichols, Jerry Ray; and Tokiyama, Masaru, 5,701,355, Cl. 381-169.000.
Tokumitsu, Jun: *See—*
Kato, Takashi; Tokumitsu, Jun; and Suda, Shigeyuki, 5,701,157, Cl. 148-240.000.
Tokunaga, Tadayuki: *See—*
Okada, Jouji; Kawamata, Akira; Tokunaga, Tadayuki; Nagatani, Noboru; Torizuka, Makoto; and Asahi, Masahiko, 5,700,898, Cl. 528-25.000.
Tokyo Automatic Machinery Works, Ltd.: *See—*
Hanazawa, Yuji, 5,699,978, Cl. 242-552.000.
Tokyo Electron Limited: *See—*
Harada, Junji; Harada, Ichiro; and Nakamura, Koji, 5,700,127, Cl. 414-416.000.
Ishii, Nobuo, 5,701,228, Cl. 361-234.000.
Tokyo Gas Co., Ltd.: *See—*
Toyoda, Shigeru; Yagi, Shuichi; and Itagaki, Masaaki, 5,700,405, Cl. 264-35.000.
Tokyo Ohka Kogyo Co., Ltd.: *See—*
Sato, Mitsuru; Oomori, Katsumi; Ishikawa, Kiyoshi; Iguchi, Etsuko; and Kaneko, Fumitake, 5,700,625, Cl. 430-270.100.
Tokyo Rope Mfg. Co., Ltd.: *See—*
Sohma, Masahiko; Zushi, Osamu; Machijima, Kenji; and Tsutsumi, Hisao, 5,700,126, Cl. 414-416.000.
Tolan, Jeffrey: *See—*
Foody, Brian; Nicholson, Colin; Tolan, Jeffrey; and White, Theresa, 5,700,686, Cl. 435-263.000.
Tombs, Thomas N.: *See—*
Bucks, Rodney R.; Dwyer, Patricia A.; Tombs, Thomas N.; Vreeland, William B.; Zeman, Robert E.; and May, John W., 5,701,567, Cl. 399-302.000.
Tomihashi, Nobuyuki; and Terasaka, Kiyotaro, to Daikin Industries Ltd. Fluororubber coating composition and method for modifying substrate surface. 5,700,861, Cl. 524-344.000.
Tomizawa, Kenji: *See—*
Katsuyama, Akira; Tomizawa, Kenji; Nagano, Shuichi; and Koya, Takashi, 5,701,385, Cl. 386-106.000.
Tomko, Robert S.: *See—*
Sohaiby, Frank, 5,699,576, Cl. 15-103.000.
Tomoe, Naohito; and Kashiwagi, Takashi, to Mitsubishi Denki Kabushiki Kaisha. Receive signal level detection system. 5,701,601, Cl. 455-226.200.
Tomooka, Yutaka; and Oka, Yasuhiro, to Sharp Kabushiki Kaisha. Electric vacuum cleaner. 5,699,585, Cl. 15-327.200.
Tönnigs, Bodo; and Kaden, Dietmar, to Ligmatech Maschinenbau GmbH. Feeding or stacking device for slab-shaped workpieces. 5,700,128, Cl. 414-789.100.
Toppan Printing Co., Ltd.: *See—*
Uyama, Haruo; Harada, Takahiro; Kano, Mitsuru; Matsudaira, Nagahisa; Hoshino, Kazuhisa; Kitamura, Satoshi; Noguchi, Fuminobu; and Shikakubo, Tsutomu, 5,700,550, Cl. 428-212.000.
Torcan Chemical Ltd.: *See—*
Manning, Hartford W., 5,700,945, Cl. 548-203.000.
Torelli, Guido: *See—*
Calligaro, Cristiano; Daniele, Vincenzo; Gastaldi, Roberto; Manstretta, Alessandro; and Torelli, Guido, 5,701,265, Cl. 365-185.030.
Torizuka, Makoto: *See—*
Okada, Jouji; Kawamata, Akira; Tokunaga, Tadayuki; Nagatani, Noboru; Torizuka, Makoto; and Asahi, Masahiko, 5,700,898, Cl. 528-25.000.
Tornero, Roger: *See—*
Bullard, Larry I.; Sigmon, Allen; and Tornero, Roger, 5,700,060, Cl. 297-432.030.
Torres, Josep L.: *See—*
Olivera, Baldomero M.; Rivier, Jean E.F.; Cruz, Lourdes J.; Abogadie, Fe; Hopkins, Chris E.; Dykert, John; and Torres, Josep L., 5,700,778, Cl. 514-12.000.
Torrington Company, The: *See—*
Jurras, Mark I., III, 5,701,119, Cl. 340-682.000.
Toshiba Ceramics Co., Ltd.: *See—*
Izunome, Koji; Kawanishi, Souroku; Togawa, Shinji; Ikari, Atsushi; Sasaki, Hitoshi; and Kimura, Shigeyuki, 5,700,320, Cl. 117-19.000.
Toshiba Machine Co., Ltd.: *See—*
Honda, Takaaki; and Mitani, Shinichi, 5,700,993, Cl. 219-466.000.
Toska Co., Ltd.: *See—*
Hiroki, Toyohisa; and Suzuki, Tadashi, 5,700,415, Cl. 264-318.000.
Tosoh Corporation: *See—*
Matsunaga, Osamu; and Kondo, Akio, 5,700,419, Cl. 264-656.000.
Tóth, Zoltán: *See—*
Alesz, József; Busznyák, Imre; Glódi, István; Kiss, András; Kukta, Józsefné; Nagy, Béla; Salamon, Péter; Szentpétery, Elemér; Tóth, Zoltán; and Ujhelyi, Tamás, 5,700,957, Cl. 73-861.357.
Totsuka, Nobuo: *See—*
Mano Junichi; Ogawa, Youzou; Mabuchi, Masaki; Okuno, Keizou; and Totsuka, Nobuo, 5,700,561, Cl. 428-327.000.
Touboul, Marcel: *See—*
Denis, Sophie; Orsini, Francois; Tarascon, Jean-Marie; and Touboul, Marcel, 5,700,598, Cl. 429-218.000.
Townsend, Alain Robert Michael: *See—*
McMichael, Andre James; Nixon, Douglas Fraser; Townsend, Alain Robert Michael; and Gotch, Frances Margaret, 5,700,469, Cl. 424-208.100.
McMichael, Andrew James; Nixon, Douglas Fraser; and Townsend, Alain Robert Michael, 5,700,635, Cl. 435-5.000.
Townsend, David E.: *See—*
Croteau, Andrew J.; Pierson, Mark W.; Townsend, David E.; and Naqui, Ali, 5,700,655, Cl. 435-30.000.
Toyama, Kouhel, to Shin-Etsu Handotai Co., Ltd. Wire saw apparatus. 5,699,782, Cl. 125-21.000.
Toyao, Tetsuya: *See—*
Matsumoto, Shuichi; Kuroyanagi, Masatoshi; Toyao, Tetsuya; Murakami, Masashi; and Arakoma, Yukihisa, 5,699,770, Cl. 123-470.000.
Toyo Ink Manufacturing Co., Ltd.: *See—*
Ishiyama, Masaaki; Matuura, Takeaki; Mihoya, Takashi; Fujimatsu, Shinya; Utsugi, Masayoshi; and Iibuchi, Kouichi, 5,700,867, Cl. 524-539.000.
Toyo Seikan Kaisha, Ltd.: *See—*
Kobayashi, Akira; Kurashima, Hideo; Sato, Harumi; Fujita, Satoshi; and Imazu, Katsuhiro, 5,700,529, Cl. 428-35.800.
Toyobo Co., Ltd.: *See—*
Oishi, Tadahiro; Onishi, Toshifumi; and Yoshioka, Yasuo, 5,701,002, Cl. 235-487.000.
Toyoda Gosei Co., Ltd.: *See—*
Yamazaki, Shiro; Shibata, Naoki; and Koike, Masayoshi, 5,700,713, Cl. 437-129.000.
Toyoda, Hideki: *See—*
Yamada, Tessho; Yabuta, Katsuhisa; Kawai, Takeshi; and Toyoda, Hideki, 5,700,367, Cl. 205-785.000.
Toyoda, Shigeru; Yagi, Shuichi; and Itagaki, Masaaki, to Tokyo Gas Co., Ltd. Method of lining the internal surface of a pipe. 5,700,405, Cl. 264-35.000.
Toyoshima, Kumao; Horiuchi, Ryuya; Yamauchi, Kiyoshi; Yamamoto, Tadashi; and Igarashi, Koichi, to Takeda Chemical Industries, Ltd. Protein disulfide-isomerase and production thereof. 5,700,678, Cl. 435-233.000.
Toyota, Akinori: *See—*
Tsutsui, Toshiyuki; Toyota, Akinori; and Kashiwa, Norio, 5,700,749, Cl. 502-117.000.
Tsutsui, Toshiyuki; Toyota, Akinori; and Kashiwa, Norio, 5,700,750, Cl. 502-117.000.
Toyota Jidosha Jabushiki Kaisha: *See—*
Ogawa, Kazuo; Enomoto, Takaaki; Kawai, Masato; Kato, Minoru; and Sato, Kunihito, 5,701,245, Cl. 364-424.046.
Toyota Jidosha Kabushiki Kaisha: *See—*
Kato, Yasushi; Uchida, Goro; and Uemura, Yukio, 5,699,960, Cl. 237-2.00A.
Sagiyama, Tatsuya; Baba, Fumihiko; Saito, Kaname; Matsushima, Takashi; and Iizuka, Hitoshi, 5,700,951, Cl. 73-11.080.
Tracey, Kevin J.: *See—*
Bucala, Richard J.; Vlassara, Helen; Cerami, Anthony; and Tracey, Kevin J., 5,700,447, Cl. 424-9.100.
Tracy, Clarence J.: *See—*
Shin, Hank Hukyoo; Tracy, Clarence J.; Duffin, Robert L.; Freeman, John L., Jr.; Grivna, Gordon; and Wilson, Syd R., 5,700,721, Cl. 437-198.000.
Tracy, Kent A.: *See—*
Maloney, Christopher W.; Jackson, Brian D.; Mayfield, Kevin B.; Mills, Mark A.; and Tracy, Kent A., 5,701,453, Cl. 395-602.000.
Tran, Cuong Huu: *See—*
Cornell, Julie Eileen; Diaz, Jorge Lazaro; Ho, Derek Wan Hok; Nguyen, Son Duc; and Tran, Cuong Huu, 5,701,408, Cl. 395-183.140.
Tran, Duc; Wadsworth, Robert D.; Ip, Tony K.; and Russell, William C., to Canon Information Systems, Inc. Automatic detection of network hardware connection. 5,701,411, Cl. 395-200.100.
Tran, Khiem: *See—*
Masse, Robert; Dion, Alain; Bessette, Robert; and Tran, Khiem, 5,700,494, Cl. 425-131.100.
Tran, William Luong-Gia: *See—*
Rath, James; Tran, William Luong-Gia; Flynn, Kathy M.; Tara, Vinai Ming; Koes, Thomas A.; and Nizzo, Vincent J., 5,700,607, Cl. 430-15.000.
Trauth, Bernhard; Hinzpeter, Matthias; Doppler, Clemens; and Russmann, Eberhard, to Boehringer Mannheim GmbH. Method for the detection of metabolically labelled DNA. 5,700,639, Cl. 435-6.000.
Tress, Tab A.: *See—*
Gheer, Barry J.; Rasch, Kenneth R.; Tress, Tab A.; and Geyer, Richard A., 5,700,994, Cl. 219-497.000.
Triebel, Frederic: *See—*
Hercend, Thierry; Triebel, Frederic; Roman-Roman, Sergio; and Ferradini, Laurent, 5,700,907, Cl. 530-324.000.
Trigiani, Phil. Charging device. 5,699,678, Cl. 62-292.000.
Trimberger, Stephen M., to Xilinx, Inc. Computer-implemented method of optimizing a design in a time multiplexed programmable logic device. 5,701,441, Cl. 395-500.000.
Trimbo, Susan, to Nestec Ltd. Method and composition for normalizing injury response. 5,700,837, Cl. 514-546.000.
Troxel West: *See—*
Broersma, Lester, 5,699,561, Cl. 2-412.000.
True Manufacturing Company, Inc.: *See—*
Trulaske, Robert J., Sr., 5,699,676, Cl. 62-264.000.

Trulaske, Robert J., Sr., to True Manufacturing Company, Inc. Refrigerator unit with lighted door. 5,699,676, Cl. 62-264.000.
Trumper, David L.; and Williams, Mark E., to Massachusetts Institute of Technology. Positioner with long travel in two dimensions. 5,699,621, Cl. 33-1.00M.
Trustees of Boston University, The: *See—*
Gilchrest, Barbara A.; and Gordon, Philip R., 5,700,450, Cl. 424-59.000.
Trustees of Princeton University: *See—*
Kahne, Daniel E.; Goodnow, Robert A., Jr.; Taylor, Carol M.; and Yan, Lin, 5,700,916, Cl. 536-1.110.
TRW Occupant Restraint Systems GmbH: *See—*
Bock, Heinz, 5,700,035, Cl. 280-805.000.
Heilig, Alexander; and Bigi, Dante, 5,700,031, Cl. 280-731.000.
TRW Vehicle Safety Systems, Inc.: *See—*
Czank, Stephen C.; Desmarais, Robert J.; and Arnold, Stephen M., 5,699,594, Cl. 24-632.000.
Goetz, George W., 5,700,030, Cl. 280-736.000.
Lane, Wendell C., Jr., 5,700,034, Cl. 280-805.000.
Niedzwiecki, Leon P., 5,700,152, Cl. 439-78.000.
Tryfonas, Christos: *See—*
Chiussi, Fabio Massimo; Kumar, Vijay Pochampalli; Tryfonas, Christos; and Sudhakar, Muddu, 5,701,292, Cl. 370-232.000.
Tsai, Chang-Da: *See—*
Wu, Chien-Ping; and Tsai, Chang-Da, 5,701,100, Cl. 327-559.000.
Tsai, Chi-Lung, to Silitek Corporation. Method of fabricating key switches and the product thereof. 5,700,984, Cl. 200-5.00A.
Tsai, Chun-Hsin. Mounting structure. 5,700,103, Cl. 403-260.000.
Tsai, Nun-Sian: *See—*
Huang, Yung-Sheng; and Tsai, Nun-Sian, 5,700,726, Cl. 437-643.000.
Tsang, Ching Hwa: *See—*
Fontana, Robert Edward, Jr.; Gurney, Bruce Alvin; Lin, Tsann; Speriosu, Virgil Simon; Tsang, Ching Hwa; and Wilhoit, Dennis Richard, 5,701,223, Cl. 360-113.000.
Tsataros, Eddie J. Electro-mechanical fluid flow control apparatus. 5,699,833, Cl. 137-624.110.
Tsavalas, Yannis P.: *See—*
Xu, Bu-Xin; and Tsavalas, Yannis P., 5,701,075, Cl. 324-318.000.
Tsuchiya, Naoki: *See—*
Fujii, Kanenaga; Kiuchi, Masato; Nagasaka, Hiroshi; Kimura, Yoshikazu; and Tsuchiya, Naoki, 5,700,546, Cl. 428-156.000.
Tsuchiya, Tohru: *See—*
Taguchi, Yoichi; Oishi, Akihiro; Shibuya, Isao; and Tsuchiya, Tohru, 5,700,931, Cl. 540-203.000.
Tsuda, Sergio: *See—*
Cunningham, John Edward; Jan, William Young; Knox, Wayne Harvey; and Tsuda, Sergio, 5,701,327, Cl. 372-99.000.
Tsuda, Shingo: *See—*
Ikoma, Munehisa; Akutsu, Norikatsu; Enokido, Masashi; Yoshii, Fumihiko; Kaiya, Hideo; and Tsuda, Shingo, 5,700,596, Cl. 429-206.000.
Tsujita, Akio; Anzai, Masayasu; and Kawanishi, Tsuneaki, to Hitachi Koki Co., Ltd. Image forming apparatus having a photosensitive body formed of a base material consisting of As_2Se_3 or a-Si and a method. 5,701,560, Cl. 399-159.000.
Tsukamoto, Masanori; and Gocho, Tetsuo, to Sony Corporation. Method for forming multi-layer interconnections. 5,700,349, Cl. 156-657.100.
Tsumura, Naoki: *See—*
Yamauchi, Satoshi; Tamura, Hiroshi; Katooka, Takashi; Tsumura, Naoki; Hikichi, Naoto; Narumi, Chihiro; Ezaki, Takashi; Kudo, Shozo; and Ooguro, Yoshihisa, 5,701,497, Cl. 395-753.000.
Tsurugi, Tomio: *See—*
Urawa, Yoshio; Furukawa, Ken; Shimizu, Toshikazu; Yamagishi, Yoji; Tsurugi, Tomio; and Ichino, Tomio, 5,700,938, Cl. 546-14.000.
Tsuruta, Kazuhiro: *See—*
Kuboyama, Kimimasa; Yokoyama, Shoji; Miyakoshi, Yoshinori; Taniguchi, Hiroya; Tsuruta, Kazuhiro; and Goto, Hisashi, 5,699,655, Cl. 53-540.000.
Tsutsui, Toshiyuki; Toyota, Akinori; and Kashiwa, Norio, to Mitsui Petrochemical Industries, Ltd. Process for polymerizing olefins. 5,700,749, Cl. 502-117.000.
Tsutsui, Toshiyuki; Toyota, Akinori; and Kashiwa, Norio, to Mitsui Petrochemical Industries, Ltd. Process for polymerization of alpha-olefins. 5,700,750, Cl. 502-117.000.
Tsutsumi, Hisao: *See—*
Sohma, Masahiko; Zushi, Osamu; Machijima, Kenji; and Tsutsumi, Hisao, 5,700,126, Cl. 414-416.000.
Tuck, Robin P.: *See—*
Millett, Ronald P.; Tuck, Robin P.; Dennis, Blaine S.; and Robertson, David O., 5,701,459, Cl. 395-603.000.
Tucker, Edwin L. Golf swing training device. 5,700,202, Cl. 473-142.000.
Tung, Lu Ho: *See—*
Hahnfeld, Jerry L.; Bee, Timothy G.; Kirkpatrick, Donald E.; Tung, Lu Ho; and Pike, William C., 5,700,887, Cl. 526-182.000.
Turnbach, James, to BASF Corporation. Polyol compositions having internal mold release properties. 5,700,390, Cl. 252-182.240.
Turnbach, James, to BASF Corporation. Polyurethane compositions having internal mold release properties. 5,700,869, Cl. 524-731.000.
Turnlund, Todd H.: *See—*
Tartaglia, Joseph M.; Loeffler, Joseph P.; and Turnlund, Todd H., 5,700,286, Cl. 623-1.000.
Tuttle, Mark E.; Mousseau, Joseph P.; and Cirino, Clay L., to Micron Communications, Inc. Encapsulated electronic component and method for encapsulating an electronic component. 5,700,981, Cl. 174-250.000.
Tyson, Rogue. Rotatable magnetic memory reminder device. 5,699,631, Cl. 40-621.000.
Tzianabos, Arthur O.; Onderdonk, Andrew B.; and Kasper, Dennis L., to Brigham & Women's Hospital, Inc. Capsular polysaccharide immunomodulator. 5,700,787, Cl. 514-54.000.
Uchibori, Kiyofumi: *See—*
Meguro, Satoshi; Uchibori, Kiyofumi; Suzuki, Norio; Motoyoshi, Makoto; Koike, Atsuyoshi; Yamanaka, Toshiaki; Sakai, Yoshio; Kaga, Toru; Hashimoto, Naotaka; Hashimoto, Takashi; Honjou, Shigeru; and Minato, Osamu, 5,700,705, Cl. 437-52.000.
Uchida, Goro: *See—*
Kato, Yasushi; Uchida, Goro; and Uemura, Yukio, 5,699,960, Cl. 237-2.00A.
Uchida, Mamoru: *See—*
Ouchi, Toshihiko; Sakata, Hajime; Ohguri, Noriaki; and Uchida, Mamoru, 5,701,325, Cl. 372-96.000.
Uchida, Yasuhiro: *See—*
Sekiya, Harukazu; Saito, Jun; Isoda, Yuzo; Uchida, Yasuhiro; Izumi, Makoto; and Kuwata, Takashi, 5,700,006, Cl. 271-241.000.
Uchinami, Masanobu; Yamane, Koichi; and Fukui, Wataru, to Mitsubishi Denki Kabushiki Kaisha. Controller for four-stroke cycle internal-combustion engine. 5,699,769, Cl. 123-414.000.
Uchio, Masatoshi; and Yasuda, Yuichi, to Alps Electric Co., Ltd. Portable input apparatus. 5,701,187, Cl. 359-143.000.
Uchiyama, Masaaki, to Tokico Ltd. Suspension control apparatus. 5,701,246, Cl. 364-424.047.
Uchiyama, Shigeyuki: *See—*
Kusaka, Yosuke; Uchiyama, Shigeyuki; Yamano, Shozo; and Narisawa, Tsutomu, 5,701,524, Cl. 396-123.000.
Udagawa, Tetsu: *See—*
Oguchi, Satoshi; Ishihara, Masamichi; Ito, Kazuya; Murakami, Gen; Anjoh, Ichiro; Sakuta, Toshiyuki; Yamaguchi, Yasunori; Kasama, Yasuhiro; Udagawa, Tetsu; Miyamoto, Eiji; Matsuno, Youichi; Satoh, Hiroshi; and Nozoe, Atsusi, 5,701,031, Cl. 257-686.000.
Uecker, Arwed: *See—*
Kammerer, Eric; Biering, Lothar; Grohs, Erhard; Groht, Klaus; Reynvaan, Conrad; Siegmund, Horst; Spangenberg, Jorgen; and Uecker, Arwed, 5,701,046, Cl. 310-251.000.
Ueda, Atsushi, to Zexel Corporation. Electromagnetic valve and unit-type fuel injection device using the same. 5,699,963, Cl. 239-88.000.
Ueda, Makoto: *See—*
Yamagishi, Masahiro; Ueda, Makoto; Takai, Yukie; Yasuda, Mari; and Mikawa, Takashi, 5,700,670, Cl. 435-128.000.
Ueda, Tetsuya; Shibata, Jun; and Yama, Yomiyuki, to Mitsubishi Denki Kabushiki Kaisha. Semiconductor device. 5,701,033, Cl. 257-704.000.
Ueda, Yutaka; Okauchi, Ken; and Koboshi, Shigeharu, to Konica Corporation. Automatic processing machine for silver halide photographic light-sensitive materials. 5,701,541, Cl. 396-569.000.
Uemura, Yukio: *See—*
Kato, Yasushi; Uchida, Goro; and Uemura, Yukio, 5,699,960, Cl. 237-2.00A.
Ueno, Takuya: *See—*
Honda, Tsutomu; Itoh, Hisanori; Ueno, Takuya; Mori, Junji; Matsumoto, Hiroyuki; Hasegawa, Yasushi; and Kajita, Hideo, 5,701,518, Cl. 396-29.000.
Uhlmann, Eckart; and Struth, Gerhard, to Hermes Schleifmittel GmbH. Coated abrasive belt. 5,700,188, Cl. 451-532.000.
Ujhelyi, Tamás: *See—*
Alesz, József; Busznyák, Imre; Glódi, István; Kiss, András; Kukta, Józsefné; Nagy, Béla; Salamon, Péter; Szentpétery, Elemér; Tóth, Zoltán; and Ujhelyi, Tamás, 5,700,957, Cl. 73-861.357.
Ujita, Hiroshi: *See—*
Arita, Setsuo; Ito, Tetsuo; Ohga, Yukiharu; Ujita, Hiroshi; Murata, Fumio; Miyake, Masao; and Nishizawa, Yasuo, 5,701,394, Cl. 395-11.000.
Ukima Colour & Chemicals Mfg. Co., Ltd.: *See—*
Hanada, Kazuyuki, 5,700,868, Cl. 524-590.000.
Ukraincik, Kresimir: *See—*
Combs, Jerome T.; Busey, Hugh W.; and Ukraincik, Kresimir, 5,699,809, Cl. 128-746.000.
Ullrich, Axel: *See—*
Hirth, Klaus Peter; Schwartz, Donna Pruess; Mann, Elaina; Shawver, Laura Kay; Keri, Gyorgi; Szekely, Istvan; Bajor, Tamas; Haimichael, Janis; Orfi, Laszlo; Levitzki, Alex; Gazit, Aviv; Ullrich, Axel; Lammers, Reiner; Kabbinavar, Fairooz F.; Slamon, Dennis; and Tang, Peng Cho, 5,700,822, Cl. 514-380.000.
Hirth, Klaus Peter; Schwartz, Donna Pruess; Mann, Elaina; Shawver, Laura Kay; Kéri, György; Székely, István; Bajor, Tamás; Haimichael, Janis; Orfi, László; Levitzki, Alex; Gazit, Aviv; Ullrich, Axel; and Lammers, Reiner, 5,700,823, Cl. 514-380.000.
Ulmer, Peter: *See—*
Gosdowski, Gerhard; Arleth, Werner; and Ulmer, Peter, 5,699,891, Cl. 198-370.100.
Ultradent Products? Inc.: *See—*
Fischer, Dan E.; and Jensen, Steven D., 5,700,148, Cl. 433-217.100.
Umbro, Gerald G. Line marking device. 5,699,622, Cl. 33-414.000.
Umemoto, Jun: *See—*

Tadano, Toshio; Miike, Akira; and Umemoto, Jun, 5,700,652, Cl. 435-14.000.
Umetani, Makoto: *See—*
  Kashiwagi, Yoshinari; Umetani, Makoto; Kataoka, Hidenao; Inoue, Kenji; Nakamura, Shoji; and Morimoto, Satoru, 5,700,307, Cl. 65-374.100.
Umezu, Akira, to NEC Corporation. Method of and apparatus for switching multi-slot time division signals. 5,701,299, Cl. 370-376.000.
Uni-Charm Corporation: *See—*
  Ishikawa, Hiroki; Kenmochi, Yasuhiko; Bando, Takeshi; Hayashi, Masaho; and Shinogi, Norikazu, 5,699,912, Cl. 206-494.000.
  Yamamoto, Masamitsu; and Yamaki, Rumi, 5,700,256, Cl. 604-397.000.
Union Carbide Chemicals & Plastics Technology Corporation: *See—*
  Murray, Rex Eugene, 5,700,748, Cl. 502-102.000.
Union Oil Company of California: *See—*
  Van Slyke, Donald C., 5,700,763, Cl. 507-125.000.
Uniroyal Chemical Company, Inc.: *See—*
  Dekeyser, Mark Achiel; and McDonald, Paul Thomas, 5,700,831, Cl. 514-489.000.
Uniroyal Chemical Ltd/Ltee: *See—*
  Dekeyser, Mark Achiel; and McDonald, Paul Thomas, 5,700,831, Cl. 514-489.000.
Uniscan Ltd.: *See—*
  Murdoch, Graham Alexander M., 5,701,121, Cl. 340-825.540.
Unisys Corp: *See—*
  Concannon, Ted; Vala, John; and Banks, Gerald, 5,701,361, Cl. 382-138.000.
Unisys Corporation: *See—*
  Alferness, Merwin H.; Criswell, Peter Bradley; Johnson, David Randal; and McBreen, James R., 5,701,316, Cl. 371-53.000.
  Braseth, David L.; Eiden, Glen P.; and Smith, Ronald Q., 5,701,473, Cl. 395-621.000.
  Koerber, Paul Donald; and Neubauer, Ronald Jay, 5,701,472, Cl. 395-619.000.
  Purdham, David M., 5,701,313, Cl. 371-40.200.
  Whittaker, Bruce Ernest, 5,701,431, Cl. 395-485.000.
United Biomedical, Inc.: *See—*
  McMichael, Andrew James; Nixon, Douglas Fraser; and Townsend, Alain Robert Michael, 5,700,635, Cl. 435-5.000.
United Dominion Industries, Inc.: *See—*
  Norton, Larry A., 5,699,825, Cl. 137-238.000.
United Kingdom of Great Britain and Northern Ireland of Defence and Evaluation Research Agency, The Secretary of State for Defence in Her Britannic Majesty's Government of the: *See—*
  Griffiths, Richard F.; and Jones, Christopher David, 5,701,009, Cl. 250-356.100.
United Microelectronics Corporation: *See—*
  Chen, Hwi-Huang; and Hong, Gary, 5,700,708, Cl. 437-52.000.
  Hsu, Chen-Chung; Chang, Tsun-Tsai; and Lin, Larry, 5,700,711, Cl. 437-60.000.
  Kuo, Ta-Chi; and Lin, Jyh-Kuang, 5,700,728, Cl. 438-216.000.
  Tang, Alex, 5,701,144, Cl. 345-188.000.
  Tang, Alex; and Chu, Frank, 5,701,445, Cl. 395-516.000.
United States of America
  Agriculture: *See—*
    Anthony, William S.; and Byler, Richard K., 5,700,961, Cl. 73-866.000.
  Air Force: *See—*
    McGrath, Stephen F.; and Shaw, Leonard L., 5,699,981, Cl. 244-1.000.
    Mills, Shannon E.; Shaffer, Randy; Freeman, Michael T.; Plamondon, Thomas J.; and Oakes, Barry L., Jr., 5,700,147, Cl. 433-98.000.
  Army: *See—*
    Piacente, Robert A.; Madulka, Karol Anne Lau; and Kenna, John M., 5,700,088, Cl. 374-141.000.
    Steelman, Michael L.; and Long, Calvin W., 5,700,341, Cl. 156-172.000.
    Wood, Sheila J., 5,700,646, Cl. 435-6.000.
  Energy: *See—*
    Berlin, Gary J., 5,701,125, Cl. 341-63.000.
    Brown, Edward J.; Baldasaro, Paul F.; and Dziendziel, Randolph J., 5,700,332, Cl. 136-253.000.
  Health and Human Services: *See—*
    Korthuis, Ronald J.; Kong, Lipu; and Keefer, Larry K., 5,700,830, Cl. 514-426.000.
  National Aeronautics and Space Administration: *See—*
    Roth, Don J., 5,700,955, Cl. 73-597.000.
  Navy: *See—*
    Weinhardt, Robert; Lindfors, Allen J.; Rieger, James L., deceased, 5,701,101, Cl. 327-561.000.
U.S. Philips Corporation: *See—*
  Jacob, Heinz-Jürgen, 5,701,336, Cl. 378-132.000.
  Lambert, Nicolaas; and Van Gorkom, Gerardus G. P., 5,701,134, Cl. 345-74.000.
  Liedenbaum, Coen T. H. F.; Colak, Sel B.; and Schleipen, Johannes J. H. B., 5,701,396, Cl. 395-25.000.
  Warnier, Jacques; Van Der Beek, Gerrit; and Weerts, Hubertus, 5,700,548, Cl. 428-209.000.
  d'Achard Van Enschut, Johannes F. M., 5,700,193, Cl. 463-3.000.
U.S. Polymers, Inc.: *See—*
  Ohanesian, Harout, 5,699,846, Cl. 160-168.10V.
United States Surgical Corporation: *See—*
  Bell, Mace H.; and Sienkiewicz, Henry R., 5,700,275, Cl. 606-208.000.
  Foster, Brian W., 5,699,909, Cl. 206-370.000.
  Peyser, Mark S.; Cuny, Douglas J.; Strauss, Douglas W.; Reed, Scott W.; Rethy, Csaba L.; and Aranyi, Ernie, 5,700,270, Cl. 606-142.000.
  Sauer, Jude S.; Greenwald, Roger J.; Oravecz, Michael G.; and Kobilansky, Alex, 5,700,236, Cl. 600-175.000.
  Whitfield, Kenneth H.; and Aranyi, Ernie, 5,700,271, Cl. 606-143.000.
United Technologies Automotive Systems, Inc.: *See—*
  Perry, William; and Helmer, Kerry, 5,701,211, Cl. 359-873.000.
United Technologies Corporation: *See—*
  Hall, Kenneth B.; McClelland, Robert J.; and Auxier, Thomas A., 5,700,131, Cl. 416-97.00R.
Unittool Punch & Die Company: *See—*
  Deni, Frank; Deni, Joseph A.; and Deni, Leonard A., 5,699,708, Cl. 83-186.000.
Universal Instruments Corporation: *See—*
  Kolcun, Joseph F.; Janisiewicz, Stanley W.; and Gieskes, Koenraad A., 5,699,934, Cl. 222-1.000.
Universite de Sherbrooke: *See—*
  Adoul, Jean-Pierre; and Laflamme, Claude, 5,701,392, Cl. 395-2.280.
University of Arkansas, The Board of Trustees of the: *See—*
  Eaton, L. Daniel, 5,700,288, Cl. 623-7.000.
University of California, The Regents of the: *See—*
  Hirth, Klaus Peter; Schwartz, Donna Pruess; Mann, Elaina; Shawver, Laura Kay; Keri, Gyorgi; Szekely, Istvan; Bajor, Tamas; Haimichael, Janis; Orfi, Laszlo; Levitzki, Alex; Gazit, Aviv; Ullrich, Axel; Lammers, Reiner; Kabbinavar, Fairooz F.; Slamon, Dennis; and Tang, Peng Cho, 5,700,822, Cl. 514-380.000.
  McElroy, Marlene D., deceased; Helinski, Donald R.; Wood, Keith V.; De Wet, Jeffrey R.; Ow, David W.; and Howell, Stephen H., 5,700,673, Cl. 435-189.000.
  O'Brien, John S., 5,700,909, Cl. 530-326.000.
  Rubin, Gerry; Therrien, Marc; Chang, Henry; Karim, Felix; and Wassarman, David, 5,700,675, Cl. 435-194.000.
University of Colorado, The, Regents of the: *See—*
  Marble, Herbert A.; and Davis, Robert H., 5,700,667, Cl. 435-91.300.
University of Masachusetts Medical Center: *See—*
  Leonard, Jack L.; and Newburger, Peter E., 5,700,660, Cl. 435-69.100.
University of Pennsylvania, The Trustees of the: *See—*
  Hirschmann, Ralph F.; Spanevello, Rolando A.; and Nutt, Ruth F., 5,700,905, Cl. 530-311.000.
  Neilson, Eric G.; Danoff, Theodore; Okada, Hirokazu; and Strutz, Frank, 5,700,690, Cl. 435-320.100.
  Sigafoos, Robert D., 5,699,861, Cl. 168-17.000.
University of Pittsburgh: *See—*
  Lazo, John S.; Rice, Robert L.; Cunningham, April; and Wipf, Peter, 5,700,821, Cl. 514-374.000.
University of Rochester, The: *See—*
  Watanabe, Kyoichi A.; Pankiewicz, Krzystof W.; Goldstein, Barry M.; and Bell, J. Ellis, 5,700,786, Cl. 514-47.000.
University of Utah Research Foundation: *See—*
  Hlady, Vladimir; Pungor, Andras; and Stroup, Eric W., 5,700,953, Cl. 73-105.000.
  Olivera, Baldomero M.; Rivier, Jean E.F.; Cruz, Lourdes J.; Abogadie, Fe; Hopkins, Chris E.; Dykert, John; and Torres, Josep L., 5,700,778, Cl. 514-12.000.
University of Washington, The: *See—*
  Harryman, Douglas T., II, 5,700,266, Cl. 606-80.000.
  Hochman, Daryl; and Haglund, Michael M., 5,699,798, Cl. 128-653.100.
  Kollin, Joel S.; Johnston, Richard S.; and Melville, Charles D., 5,701,132, Cl. 345-8.000.
Unno, Akira: *See—*
  Ishiwata, Kazuya; Watanabe, Yasuyuki; Nishida, Naoya; and Unno, Akira, 5,701,544, Cl. 396-609.000.
Unser, Karl-Heinz: *See—*
  Kiel, Bernd; and Unser, Karl-Heinz, 5,700,063, Cl. 303-961.000.
Unverzagt, Kristen L.: *See—*
  Bender, James G.; Maples, Phillip B.; Smith, Stephen; Unverzagt, Kristen L.; and Van Epps, Dennis E., 5,700,691, Cl. 435-325.000.
Upchurch, James W. Coupler locking device and method. 5,700,024, Cl. 280-507.000.
Urai, Yoshihiro: *See—*
  Sugimoto, Yoichi; Urai, Yoshihiro; and Matsuda, Shohei, 5,700,074, Cl. 303-186.000.
Urawa, Yoshio; Furukawa, Ken; Shimizu, Toshikazu; Yamagishi, Yoji; Tsurugi, Tomio; and Ichino, Tomio, to Eisai Co., Ltd.; and Eisai Chemical Co., Ltd. Intermediates for imidazopyridine derivatives. 5,700,938, Cl. 546-14.000.
Urbain, Didier: *See—*
  Renzo, Bernard; Robinault, Michel; and Urbain, Didier, 5,700,498, Cl. 425-532.000.
Urbanski, Mark Gerald, to Kinetikos Medical Incorporated. Method for repairing bone fractures using bone-lock system. 5,700,267, Cl. 606-86.000.
Urgola, Anthony F.: *See—*
  Ganz, Leonard R.; and Urgola, Anthony F., 5,699,743, Cl. 101-488.000.
Urihara, Kazuhiro: *See—*
  Kokura, Makoto; Akimoto, Koji; and Urihara, Kazuhiro, 5,700,884, Cl. 525-528.000.

Urso, Richard: *See—*
  Shennib, Adnan; and Urso, Richard, 5,701,348, Cl. 381-68.600.
USG Interiors, Inc.: *See—*
  Tinen, William J.; Singal, Pawan; Hooper, Douglas; and Wendt, Alan C., 5,699,641, Cl. 52-506.070.
Ushiro, Takahiro: *See—*
  Miyamoto, Kazuki; Ohki, Naoyuki; Nakano, Masaki; Ushiro, Takahiro; Fukazu, Yasuo; Chaki, Atsushi; Takata, Shinichi; and Ohyoshi, Kazuhiro, 5,701,402, Cl. 395-115.000.
Ushirokawa, Akihisa: *See—*
  Okanoue, Kazuhiro; and Ushirokawa, Akihisa, 5,701,333, Cl. 375-347.000.
Usui, Hirotake; Matsuura, Kazuya; and Nitta, Shin, to Ryobi Ltd. Molten metal supply device. 5,700,422, Cl. 266-94.000.
Utility Trailer Manufacturing Company: *See—*
  Bennett, Paul F.; Adams, John P.; and Gomez, Arturo C., 5,700,118, Cl. 410-113.000.
Utke, Nora J.: *See—*
  Brewer, James E.; Olson, Kenneth F.; Stolte, John F.; Utke, Nora J.; and Stendahl, Gary B., 5,700,281, Cl. 607-5.000.
Utsugi, Masayoshi: *See—*
  Ishiyama, Masaaki; Matuura, Takeaki; Mihoya, Takashi; Fujimatsu, Shinya; Utsugi, Masayoshi; and Iibuchi, Kouichi, 5,700,867, Cl. 524-539.000.
Utsunomiya, Hajime, to TDK Corporation. Magneto-optical recording medium. 5,700,567, Cl. 428-332.000.
Utz, Martin: *See—*
  Galsterer, Wolfgang; Schlegel, Andreas; and Utz, Martin, 5,700,535, Cl. 428-40.100.
Uyama, Haruo; Harada, Takahiro; Kano, Mitsuru; Matsudaira, Nagahisa; Hoshino, Kazuhisa; Kitamura, Satoshi; Noguchi, Fuminobu; and Shikakubo, Tsutomu, to Toppan Printing Co., Ltd. Transparent hologram seal. 5,700,550, Cl. 428-212.000.
Uzawa, Masashi: *See—*
  Shimizu, Shigeru; Saitoh, Takashi; Uzawa, Masashi; and Takayanagi, Yasuyuki, 5,700,399, Cl. 252-500.000.
Vaccarello, Ronald, to NOREL. Molded biodegradable packaging. 5,699,645, Cl. 53-139.500.
Vakkalagadda, Ramamohan R.: *See—*
  Glew, Andrew F.; Mennemeier, Larry M.; Peleg, Alexander D.; Bistry, David; Mittal, Millind; Dulong, Carole; Kowashi, Eiichi; Eitan, Benny; Lin, Derrick; and Vakkalagadda, Ramamohan R., 5,701,508, Cl. 395-800.000.
Vala, John: *See—*
  Concannon, Ted; Vala, John; and Banks, Gerald, 5,701,361, Cl. 382-138.000.
Valence Technology, Inc.: *See—*
  Jensen, Gert; and Shackle, Dale, 5,700,300, Cl. 29-623.500.
  Shi, Hang; Barker, Jeremy; and Koksbang, Rene, 5,700,298, Cl. 29-623.100.
Valeo Systemes De'Essuyage: *See—*
  Berge, Gilles; Eustache, Jean-Pierre; Princet, Joël; and Bouy, Gilbert, 5,699,582, Cl. 15-250.340.
Valeo Systemes D'Essuyage: *See—*
  Maubray, Daniel, 5,699,583, Cl. 15-250.201.
Valoppi, Valeri L., to BASF Corporation. 1,1,1,2-tetrafluoroethane as a blowing agent in integral skin polyurethane shoe soles. 5,700,843, Cl. 521-51.000.
Van Doorne's Transmissie B.V.: *See—*
  Roovers, Wilhelmus Cornelus Waltherus Maria; and Choi, Chi Chung, 5,700,225, Cl. 477-46.000.
Van, Nga Thi: *See—*
  Mirigian, Gregory E.; Van, Nga Thi; and Gia, Son M., 5,700,258, Cl. 606-1.000.
Van Beersel, Jozef, to NV Raychem SA. Article and method for protecting substrates. 5,700,530, Cl. 428-35.900.
van den Akker, Richard Henry; Baverstock, Nigel; and Gibbs, Roy Thomas, to Carnaudmetalbox (Holdings) USA Inc. Capping apparatus. 5,699,654, Cl. 53-478.000.
Van Der Beek, Gerrit: *See—*
  Warnier, Jacques; Van Der Beek, Gerrit; and Weerts, Hubertus, 5,700,548, Cl. 428-209.000.
Vanderbilt Unversity: *See—*
  Roberts, L. Jackson; and Morrow, Jason D., 5,700,654, Cl. 435-25.000.
Van Der Schueren, Freddy Maurits Luc: *See—*
  Gonze, Michel Henri André; Van Der Schueren, Freddy Maurits Luc; and Rapaille, André Léon Ivon, 5,700,514, Cl. 426-660.000.
Van Doren, Matthew J.; Sauer, Don; Slocum, Alexander H.; Rocki, David Pap; Tam, Johann; and Gerszewski, Larry, to Silicon Valley Group, Inc. Wafer gripper. 5,700,046, Cl. 294-119.100.
Van Emmerik, Piet T.: *See—*
  Logue, Daniel R.; Van Emmerik, Piet T.; Mann, Roger H.; Sun, Edward L.; Avalon, Gary A.; Caldwell, Carol A.; Chang, Eng-Pi; and Huskey, Richard A., 5,700,571, Cl. 428-352.000.
Van Epps, Dennis E.: *See—*
  Bender, James G.; Maples, Phillip B.; Smith, Stephen; Unverzagt, Kristen L.; and Van Epps, Dennis E., 5,700,691, Cl. 435-325.000.
Van Gorkom, Gerardus G. P.: *See—*
  Lambert, Nicolaas; and Van Gorkom, Gerardus G. P., 5,701,134, Cl. 345-74.000.
Vanguard International Semiconductor Corporation: *See—*
  Liao, Chin-Cherng, 5,700,741, Cl. 438-723.000.
  Lin, John C. H.; Lee, Daniel Hao-Tien; and Cherng, Meng-Jaw, 5,700,731, Cl. 438-381.000.
Van Gundy, Steven R.: *See—*
  Legvold, Vernon J.; Liu, Julia; Michod, Carol S.; Ng, Chan Yiu; Sherman, William G., II; Steffan, Jeffrey R.; and Van Gundy, Steven R., 5,701,429, Cl. 395-441.000.
Van Heertum, John C.; Kleschick, William A.; Arndt, Kim E.; Costales, Mark J.; Ehr, Robert J.; Bradley, Kimberly Brubaker; Reifschneider, Walter; Benkö , Zoltan; Ash, Mary Lynne; and Jachetta, John J., to DowElanco. N-aryl[1,2,4]triazolo[1,5-a]pyridine-2-sulfonamide herbicides. 5,700,940, Cl. 546-119.000.
van Hoff, Arthur A.: *See—*
  Joy, William N.; and van Hoff, Arthur A., 5,701,470, Cl. 395-614.000.
van Hoogevest, Peter: *See—*
  Frederiksen, Lene; Anton, Klaus; and van Hoogevest, Peter, 5,700,482, Cl. 424-450.000.
VanSelous, Joseph S.; Haggerty, Judith F.; and Norris, Kevin E., to Ford Global Technologies, Inc. Two-speed planetary gearset having locking plantetary pinions. 5,700,218, Cl. 475-12.000.
Van Slyke, Donald C., to Union Oil Company of California. Thermally stable oil-based drilling fluid. 5,700,763, Cl. 507-125.000.
Varady, Arthur Joseph: *See—*
  Sinha, Satyadeo Narain; Varady, Arthur Joseph; and Gilbert, Richard John, 5,700,954, Cl. 73-116.000.
Varona, Eugenio: *See—*
  McDowall, Debra Jean; Sawyer, Lawrence Howell; Wright, Robert David; and Varona, Eugenio, 5,700,254, Cl. 604-378.000.
Vasilyevich, Sokolov Sergey: *See—*
  Yamamoto, Yuichi; Tatsu, Haruyoshi; Alexeevna, Volkova Margarita; Vasilyevich, Sokolov Sergey; and Vladimirovich, Veretennikov Nikolai, 5,700,879, Cl. 525-353.000.
Vassar, Clyde W., deceased (by Jean F. Vassar, administrator): *See—*
  Kemerer, W. James; Vassar, Clyde W., deceased, 5,700,495, Cl. 425-190.000.
Vassar, Jean F., administrator: *See—*
  Kemerer, W. James; Vassar, Clyde W., deceased, 5,700,495, Cl. 425-190.000.
Vector Laboratories: *See—*
  Westling, Mark E.; and Daniel, Steven G., 5,700,921, Cl. 536-22.100.
Vectorpharma International S.p.A.: *See—*
  Canal, Tiziana; Lovrecich, Mara Lucia; and Carli, Fabio, 5,700,486, Cl. 424-501.000.
Vehse, Daniel R.: *See—*
  Daniels, George R.; Halseth, Thor R.; and Vehse, Daniel R., 5,701,347, Cl. 381-24.000.
Venable, Dennis L.; and Nagao, Takashi, to Xerox Corporation; and Fuji Xerox Company, Ltd. Pipelined image processing system for a single application environment. 5,701,479, Cl. 395-670.000.
Venegas, Manuel Garcia: *See—*
  Dambus, Ture; Kirk, Ole; Pedersen, Gitte; and Venegas, Manuel Garcia, 5,700,770, Cl. 510-305.000.
Venkatesan, Aranapakam M.: *See—*
  Albright, Jay Donald; Venkatesan, Aranapakam M.; Duzza, John P.; and Sum, Fuk-Wah, 5,700,796, Cl. 514-220.000.
Venkatraman, Subbu S.: *See—*
  Biegajski, James E.; Venkatraman, Subbu S.; and Scott, Ann M., 5,700,478, Cl. 424-434.000.
Verbrugge, Calvin J.: *See—*
  Sandvick, Paul E.; and Verbrugge, Calvin J., 5,700,516, Cl. 427-155.000.
Verdonk, Edward: *See—*
  Webb, Peter; and Verdonk, Edward, 5,699,806, Cl. 128-667.060.
Vesture Corporation: *See—*
  Owens, Byron C., 5,700,284, Cl. 607-114.000.
Viegas, Herman H.: *See—*
  Jurewicz, Romuald Martin; and Viegas, Herman H., 5,699,670, Cl. 62-80.300.
Viehbeck, Alfred: *See—*
  Angelopoulos, Marie; Brusic, Vlasta A.; Graham, Teresita Ordonez; Purushothaman, Sampath; Saraf, Ravi F.; Shaw, Jane Margaret; Roldan, Judith Marie; and Viehbeck, Alfred, 5,700,398, Cl. 252-500.000.
Vieslet, Jacques: *See—*
  Jeanvoine, Pierre; Lismonde, Michel; and Vieslet, Jacques, 5,700,579, Cl. 428-437.000.
Vigel S.p.A.: *See—*
  Cavallo, Giorgio; Giovanelli, Gian Luca; and Martinis, Marco, 5,699,947, Cl. 225-101.000.
Vild, Michael J.: *See—*
  Maltby, Robert E., Jr.; McMaster, Harold A.; Breno, Philip J.; Buckingham, James W.; and Vild, Michael J., 5,700,306, Cl. 65-182.200.
Villette, Jean De Chevron; Perache, Jean-Michel; and Lagarde, Eric, to Somfy. Motorized roll-up device for venetian blinds. 5,699,847, Cl. 160-168.10P.
Vinel, Paul, to Alcatel Cit. Asynchronous time-division multiplex packet transmission link control information transmission method. 5,701,303, Cl. 370-322.000.
Vinson, Kenneth Douglas; and Deason, Howard Thomas, to Procter & Gamble Company, The. Process for including a fine particulate filler into tissue paper using an anionic polyelectrolyte. 5,700,352, Cl. 162-111.000.

Virginia Tech Intellectual Properties, Inc.: *See—*
Canfield, Stephen L.; Reinholtz, Charles F.; Salerno, Robert J.; and Ganino, Anthony J., 5,699,695, Cl. 74-490.060.
Virnelson, Kevin M.; Hughes, Kenneth E.; Masterson, David C.; Fink, David J.; Metz, Barbara A.; Pickett, Gordon E.; Gemmer, Paul M.; and Brody, Richard S., to Ranpak Corp. Paper strengthened with solubilized collagen and method. 5,700,354, Cl. 162-143.000.
Vita International, Inc.: *See—*
Bodhaine, James, 5,699,822, Cl. 137-68.150.
Vitantonio, Marc L.: *See—*
Lucas, Eric E.; Vitantonio, Marc L.; and Miroewski, Michael, 5,699,719, Cl. 99-299.000.
Vivex AB: *See—*
Lee, Hyosong; and Ehnström, Lars, 5,700,378, Cl. 210-771.000.
Viviano, Robert P. Railing system. 5,701,236, Cl. 362-152.000.
Vivorx Inc.: *See—*
Soon-Shiong, Patrick; Desai, Neil P.; Sandford, Paul A.; Heintz, Roswitha A.; and Sojomihardjo, Soebianto, 5,700,848, Cl. 522-7.000.
Vladimirovich, Veretennikov Nikolai: *See—*
Yamamoto, Yuichi; Tatsu, Haruyoshi; Alexeevna, Volkova Margarita; Vasilyevich, Sokolov Sergey; and Vladimirovich, Veretennikov Nikolai, 5,700,879, Cl. 525-353.000.
Vlassara, Helen: *See—*
Bucala, Richard J.; Vlassara, Helen; Cerami, Anthony; and Tracey, Kevin J., 5,700,447, Cl. 424-9.100.
VLSI Technology, Inc.: *See—*
Ganapol, David; and Small, Gary, 5,700,045, Cl. 294-64.100.
Nowak, Edward D.; Loh, Ying-Tsong; and Ding, Lily, 5,700,717, Cl. 437-192.000.
Vogel, Gunther: *See—*
Steffes, Helmut; Dinkel, Dieter; Vogel, Gunther; and Volz, Peter, 5,700,071, Cl. 303-119.200.
Vogel, Paul; Anthamatten, Olivier; and Bättig, Rainer, to Ascom Tech AG. Optical reflection modulator. 5,701,193, Cl. 359-290.000.
Vogel, Robert D. Portable motorcycle carrier. 5,699,985, Cl. 224-564.000.
Vogelstein, Bert: *See—*
Beaudry, Gary A.; Bertelsen, Arthur H.; Sherman, Michael I.; and Vogelstein, Bert, 5,700,657, Cl. 435-69.100.
Vogt, Peter F.: *See—*
Preiser, Marvin F.; and Vogt, Peter F., 5,700,474, Cl. 424-405.000.
Voidel, Peter: *See—*
Koltze, Karl; Heinrich, Hans-Jürgen; Roland, Volker; and Voidel, Peter, 5,699,658, Cl. 57-76.000.
Vollaro, Joseph F., to IPEC Precision, Inc. Apparatus for providing consistent, non-jamming registration of notched semiconductor wafers. 5,700,297, Cl. 29-25.010.
Vollmar, Horst: *See—*
Kürten, Heribert; Radtke, Uwe; Taube, Wolfgang; and Vollmar, Horst, 5,699,666, Cl. 60-652.000.
Volz, Peter: *See—*
Steffes, Helmut; Dinkel, Dieter; Vogel, Gunther; and Volz, Peter, 5,700,071, Cl. 303-119.200.
Von der Eltz, Herbert: *See—*
Seliger, Heinz-Hartmut; Berner, Sibylle; Müllegger, Klaus; Von der Eltz, Herbert; and Batz, Hans-Georg, 5,700,919, Cl. 536-22.100.
VonDross, Kelly L., to Best Block Company. Sound attenuating structural block. 5,700,983, Cl. 181-285.000.
Voss, Jeffrey W.; and Caron, Connie, to BASF Aktiengesellschaft. Inducers of gamma globin gene expression and screening assays therefor. 5,700,640, Cl. 435-6.000.
Vossloh-Schwabe GmbH: *See—*
Albeck, Bernhard, 5,700,159, Cl. 439-571.000.
Vreeland, William B.: *See—*
Bucks, Rodney R.; Dwyer, Patricia A.; Tomba, Thomas N.; Vreeland, William B.; Zeman, Robert E.; and May, John W., 5,701,567, Cl. 399-302.000.
Vyas, Krishnamurthi; Prabhakar, Chebiyyam; Rao, Sreenivas Dharmaraja; Sarma, Mamillapalli Ramabadhra; Reddy, Om Gaddam; Ramanujam, Rajagopalan; and Chakrabarti, Ranjan, to Dr. Reddy's Research Foundation. Polymorphic forms of troglitazone having enhanced anti-diabetic activity and a process for their preparation. 5,700,820, Cl. 514-369.000.
W.C. Heraeus GmbH: *See—*
Hörmann, Michael; Lupton, David Francis; Schielke, Jörg; and Schölz, Friedhold, 5,700,418, Cl. 264-604.000.
Serole, Bernard, 5,700,408, Cl. 264-65.000.
W. L. Gore & Associates, Inc.: *See—*
Fischer, Paul James; and Petefish, William George, 5,701,032, Cl. 257-692.000.
Goodwin, Brent L.; and Masley, Francis J., 5,700,544, Cl. 428-76.000.
Myers, David J.; Lewis, James D.; House, Wayne D.; and Schwarz, Karl E., 5,700,285, Cl. 623-1.000.
Myers, David J.; Lewis, James D.; and Campbell, Carey V., 5,700,287, Cl. 623-1.000.
W. Neudorff GmbH KG: *See—*
Puritch, George S.; Almond, David S.; and Parker, Diana L., 5,700,473, Cl. 424-405.000.
W. R. Grace & Co.-Conn.: *See—*
Gray, Stephen L., 5,699,650, Cl. 53-442.000.
Speer, Drew V.; Roberts, William P.; Morgan, Charles R.; and Ebner, Cynthia L., 5,700,554, Cl. 428-220.000.
W. Schlafhorst AG & Co.: *See—*
Koltze, Karl; Heinrich, Hans-Jürgen; Roland, Volker; and Voidel, Peter, 5,699,658, Cl. 57-76.000.
Wabco GmbH: *See—*
Kiel, Bernd; and Unser, Karl-Heinz, 5,700,063, Cl. 303-961.000.
Wacker-Chemie GmbH: *See—*
Mueller, Johann; and Kern, Ingrid, 5,700,870, Cl. 524-837.000.
Wade, D. Scott; and Wade, Richard L. Van canopy. 5,700,048, Cl. 296-163.000.
Wade, Richard L.: *See—*
Wade, D. Scott; and Wade, Richard L., 5,700,048, Cl. 296-163.000.
Wadsworth, Robert D.; and Danknick, Daniel A., to Canon Kabushiki Kaisha. Fail-safe flashing of EPROM. 5,701,492, Cl. 395-712.000.
Wadsworth, Robert D.: *See—*
Tran, Duc; Wadsworth, Robert D.; Ip, Tony K.; and Russell, William C., 5,701,411, Cl. 395-200.100.
Waetjen, Frank: *See—*
Biere, Helmut; Huth, Andreas; Rahtz, Dieter; Schmiechen, Ralph; Seidelmann, Dieter; Kehr, Wolfgang; Schneider, Herbert Hans; Engelstoft, Mogens; Hansen, Bondo John; Waetjen, Frank; and Honoré , Tage, 5,700,808, Cl. 514-292.000.
Wagener, Jefferson L.: *See—*
Digonnet, Michel J. F.; Falquier, Dario G.; Wagener, Jefferson L.; and Shaw, H. John, 5,701,318, Cl. 372-6.000.
Wagner, Bruno: *See—*
Heckel, Horst; Skaletz, Detlef; Wagner, Bruno; and Heydweiller, Joachim, 5,700,556, Cl. 428-297.400.
Wagner, Eric R.: *See—*
Miller, Gabriel L.; and Wagner, Eric R., 5,701,133, Cl. 345-46.000.
Wagner, Fred W.: *See—*
Gutniak, Mark K.; Coolidge, Thomas R.; Recker, Robert R.; and Wagner, Fred W., 5,700,775, Cl. 514-12.000.
Wagner, Hans; and Espenschied, Bernd, to Hoechst Aktiengesellschaft. Abrasion-resistant polyester mixture with enhanced consistency of processing, monofilaments therefrom, and production and use thereof. 5,700,881, Cl. 525-440.000.
Wagner, Karen M.: *See—*
Siddiqui, Shahid A.; Ziecker, Roger A.; Wagner, Karen M.; and Nassar, Jocelyne, 5,699,938, Cl. 222-146.500.
WAGO Verwaltungsgesellschaft mbH: *See—*
Rürup, Claus; and Hennemann, Lothar Roland, 5,700,986, Cl. 200-50.320.
Wakabayashi, Hiroshi; and Machida, Kiyosada, to Nikon Corporation. Aperture stop for a photometry unit of a camera. 5,701,528, Cl. 396-268.000.
Wakabayashi, Shozo, to Borg-Warner Automotive, K.K. Power transmission chain with formed bushing and associated aperture. 5,700,217, Cl. 474-217.000.
Wakai & Co., Ltd.: *See—*
Wakai, Takao, 5,700,119, Cl. 411-78.000.
Wakai, Takao, to Wakai & Co., Ltd. Nail with spreadable legs. 5,700,119, Cl. 411-78.000.
Wakayama, Kazuko: *See—*
Takeda, Yukiko; Tanabe, Shiro; and Wakayama, Kazuko, 5,701,412, Cl. 395-200.010.
Waketa, Yuko; and Mori, Nobuyoshi, to Konica Corporation. Camera with a fixed focal length lens. 5,701,207, Cl. 359-717.000.
Waki, Masaki, to Fujitsu Limited. Semiconductor device having tab leads. 5,701,028, Cl. 257-666.000.
Wakui, Tetsuya, to Canon Kabushiki Kaisha. Audio processing apparatus. 5,701,344, Cl. 381-1.000.
Walch, Axel: *See—*
Krone, Volker; Magerstädt, Michael; Walch, Axel; Gröner, Albrecht; and Hoffmann, Dieter, 5,700,459, Cl. 424-78.080.
Walker, Leigh E., to Lonza Inc. Quaternary ammonium carboxylate and borate compositions and preparation thereof. 5,700,841, Cl. 514-642.000.
Wallin, Glenn, to Bunge Foods Corporation. Sugarless bakery goods, e.g., cakes and muffins. 5,700,511, Cl. 426-549.000.
Walt, David R.: *See—*
Klainer, Stanley M.; Walt, David R.; and Gottlieb, Amos J., 5,700,897, Cl. 528-15.000.
Walter, Helmut: *See—*
Schäfer, Peter; Klintz, Ralf; Hamprecht, Gerhard; Heistracher, Elisabeth; Westphalen, Karl-Otto; Gerber, Matthias; and Walter, Helmut, 5,700,805, Cl. 514-269.000.
Walters, David Kenvyn; and Macpherson, Ian, to Ethyl Petroleum Additives Limited. Lubricant compositions. 5,700,764, Cl. 508-338.000.
Walthers, Dwight David: *See—*
Thill, Kevin Michael; and Walthers, Dwight David, 5,701,130, Cl. 343-895.000.
Wang, Daozhang: *See—*
Jones, Frank N.; Du, Cong; Teng, Ganghui; Dimian, Adel F.; and Wang, Daozhang, 5,700,882, Cl. 525-440.000.
Wang, Huan Wen: *See—*
Chen, Chien-Feng; and Wang, Huan Wen, 5,700,740, Cl. 438-710.000.
Wang, James Hongxue; and Schertz, David Michael, to Kimberly Clark Worlwide, Inc. Process for making blends of polyolefin and poly(ethylene oxide). 5,700,872, Cl. 525-187.000.
Wang, Johnny. Wheel cover adjustable in its size. 5,700,062, Cl. 301-37.330.
Wang, Shay-Ping Thomas: *See—*

Pan, Shao Wei; and Wang, Shay-Ping Thomas, 5,701,391, Cl. 395-2.210.
Wang, Tao; and Broussard, Jerry A., to Hoechst Celanese Corporation. Heterogeneous bimetallic palladium-gold catalyst for vinyl acetate production. 5,700,753, Cl. 502-330.000.
Wang, Timothy C. Y.: *See—*
Ratnik, H. Ronald; and Wang, Timothy C. Y., 5,699,961, Cl. 239-14.200.
Wang, Wen Chun; and Yang, Tzung-Zu, to Industrial Technology Research Institute. Field emission device with auto-activation feature. 5,700,175, Cl. 445-24.000.
Wang, Wen Der: *See—*
Bonnema, James; Wang, Wen Der; Demarest, Scott W.; Furner, Paul E.; and Hildebrandt, Donald W., 5,700,430, Cl. 422-125.000.
Wang, Wen-Hann: *See—*
Singh, Gurbir; Wang, Wen-Hann; Rhodehamel, Michael W.; Bauer, John M.; and Sarangdhar, Nitin V., 5,701,503, Cl. 395-800.000.
Wanke, Peter, to ITT Automotive Europe GmbH. Process for controlling the driving stability with the king pin inclination difference as the controlled variable. 5,701,248, Cl. 364-426.010.
Wård, Leif: *See—*
Lekholm, Anders; and Wård, Leif, 5,699,788, Cl. 128-203.120.
Ward, Michael E.: *See—*
Gruca, Ned J.; and Ward, Michael E., 5,700,199, Cl. 470-19.000.
Ward, Mike A.: *See—*
McGuire, Katherine M.; and Ward, Mike A., 5,699,607, Cl. 29-612.000.
Ward, Torbjorn; and Sandell, Anders, to Telefonaktiebolaget LM Ericsson. System and method for flexible coding, modulation, and time slot allocation in a radio telecommunications network. 5,701,294, Cl. 370-252.000.
Wardecki, Norbert: *See—*
Rayer, Peter; Wardecki, Norbert; and Raupp, Karl, 5,700,971, Cl. 102-334.000.
Wardwell, Robert H., to Hewlett-Packard Company. Connecting test equipment to adjacent legs of an IC or the like by interdigitating conductive wedges with the legs. 5,701,086, Cl. 324-762.000.
Warley, Guillermo A.: *See—*
Streicher, Stanley H.; and Warley, Guillermo A., 5,700,999, Cl. 235-381.000.
Warner, Madelyn Joy: *See—*
Delorme, Virgil A.; Crisofulli, Thomas; and Warner, Madelyn Joy, 5,699,827, Cl. 137-268.000.
Warnier, Jacques; Van Der Beek, Gerrit; and Weerts, Hubertus, to U.S. Philips Corporation. Multilayer film, multicolour screen-printing process for the manufacture of said multilayer film and the use of same. 5,700,548, Cl. 428-209.000.
Warren, James David, to Borg-Warner Automotive, Inc. Electric shift transfer case system for an automobile. 5,699,870, Cl. 180-247.000.
Wartian, George. Door latch operator. 5,700,044, Cl. 292-336.300.
Warwick, Paul James, Jr.: *See—*
Brown, Frederick Jeffrey; Russell, Keith; and Warwick, Paul James, Jr., 5,700,798, Cl. 514-229.800.
Washington University: *See—*
Kere, Juha; Schlessinger, David; de la Chapelle, Albert; and Srivastava, Anand Kumar, 5,700,926, Cl. 536-23.100.
Korsmeyer, Stanley J., 5,700,638, Cl. 435-6.000.
Wassarman, David: *See—*
Rubin, Gerry; Therrien, Marc; Chang, Henry; Karim, Felix; and Wassarman, David, 5,700,675, Cl. 435-194.000.
Wasson, Kevin Lee; and Slocum, Alexander Henry, to Aesop, Inc. Integrated shaft self-compensating hydrostatic bearing. 5,700,092, Cl. 384-115.000.
Watanabe, Fumio, to Fuji PhotoOptical Co. Ltd. Astigmatism correcting element. 5,701,203, Cl. 359-669.000.
Watanabe, Hideo; Boh, Satoru; Miyata, Akira; and Shiotani, Keiichi, to Mitsubishi Denki Kabushiki Kaisha. Cad system. 5,701,403, Cl. 395-119.000.
Watanabe, Kyoichi A.; Pankiewicz, Krzystof W.; Goldstein, Barry M.; and Bell, J. Ellis, to Sloan-Kettering Institute for Cancer Research; and University of Rochester, The. Analogues of adenosine 5'diphosphate and pharmaceutical compositions thereof. 5,700,786, Cl. 514-47.000.
Watanabe, Masaru, to Matsushita Electric Industrial Co., Ltd. Coating device and a method of coating. 5,700,325, Cl. 118-411.000.
Watanabe, Masato: *See—*
Nagai, Toshitake; Ikumi, Yonezo; Kakinuma, Takahide; Sawada, Norio; Sato, Koji; and Watanabe, Masato, 5,699,675, Cl. 62-149.000.
Watanabe, Tamio: *See—*
Yagi, Sakai; Watanabe, Tamio; and Nagano, Toru, 5,701,079, Cl. 324-538.000.
Watanabe, Tohru: *See—*
Shibazaki, Masaki; Ido, Mikiya; and Watanabe, Tohru, 5,700,534, Cl. 428-36.920.
Watanabe, Yasuhiro, to Sony Corporation. Coil winding device and coil winding method. 5,699,977, Cl. 242-439.000.
Watanabe, Yasushi: *See—*
Morimoto, Kiyoshi; Watanabe, Yasushi; Sanada, Yoshika; Miwa, Teiichi; and Masada, Tomoaki, 5,700,492, Cl. 425-100.000.
Watanabe, Yasuyoshi; Suzuki, Masaaki; Hazato, Atsuo; and Langström, Bengt, to Research Developement Corporation of Japan; and Hazato, Atsuo. Isocarbacyclin derivatives. 5,700,833, Cl. 514-510.000.
Watanabe, Yasuyuki: *See—*
Ishiwata, Kazuya; Watanabe, Yasuyuki; Nishida, Naoya; and Unno, Akira, 5,701,544, Cl. 396-609.000.
Watson, George Patrick: *See—*
Berger, Steven David; Liddle, James Alexander; and Watson, George Patrick, 5,701,014, Cl. 250-492.220.
Watson, Graham: *See—*
Caraway, Douglas; Watson, Graham; and Newton, T. Alex, 5,699,868, Cl. 175-339.000.
Watt, Jeffrey, to Cypress Semiconductor Corp. Electrostatic discharge (ESD) protection structure for high voltage pins. 5,701,024, Cl. 257-360.000.
Watt, Paul W.: *See—*
Rosenthal, Arthur L.; Light, Nicholas D.; and Watt, Paul W., 5,700,477, Cl. 424-426.000.
Waverly Mills, Inc.: *See—*
Caviness, Tony F., 5,699,659, Cl. 57-245.000.
Weadon, Mark W.; and Patterson, Gregory S., to Ericsson, Inc. Torsionally-biased latch arrangement. 5,700,042, Cl. 292-80.000.
Webb, Peter; and Verdonk, Edward, to Hewlett-Packard Company. Ultrasound system with nonuniform rotation corrector. 5,699,806, Cl. 128-667.060.
Weber, Alfred: *See—*
Hummel-Marquardt, Heidi; Schmitz, Thomas; Kennecke, Mario; and Weber, Alfred, 5,700,666, Cl. 435-88.000.
Weber, Christa: *See—*
Krieg, Manfred; Weber, Christa; and Szigeti, Peter, 5,700,894, Cl. 526-323.200.
Weber, Werner; Kuehn, Stefan; Kleiner, Michael; and Thewes, Roland, to Siemens Aktiengesellschaft. Arrangement for inductive signal transmission between the chip layers of a vertically integrated circuit. 5,701,037, Cl. 257-777.000.
Webster, Marc W.; Saraswat, Vijay A.; Fromherz, Markus P. J.; Austin, John C.; Rulli, Paul A.; and McCue, Daniel Lawrence, III, to Xerox Corporation. Machine graphs and capabilities to represent document output terminals composed of arbitrary configurations. 5,701,557, Cl. 399-77.000.
Weder, Donald E.; Straeter, Joseph G.; and Craig, Franklin J., to Southpac Trust International, Inc. Cover forming apparatus having pivoting forming members. 5,699,647, Cl. 53-397.000.
Weder, Donald E., to Southpac Trust International, Inc. Method for a covering flower pot and floral grouping. 5,699,648, Cl. 53-410.000.
Weder, Donald E.: *See—*
Craig, Frank; Straeter, Joseph G.; and Weder, Donald E., 5,699,652, Cl. 53-449.000.
Weerts, Hubertus: *See—*
Warnier, Jacques; Van Der Beek, Gerrit; and Weerts, Hubertus, 5,700,548, Cl. 428-209.000.
Wegman, Paul M., to Xerox Corporation. Magnetic filling and mixing apparatus and processes thereof. 5,699,842, Cl. 141-369.000.
Wegner, Brigitte: *See—*
Schuhmacher, Rudolf; Dralle-Voss, Gabriele; Oppenlaender, Knut; Wegner, Brigitte; and Hohmann, Andreas, 5,700,351, Cl. 162-75.000.
Wehmeier, Guido: *See—*
Alberti, Klaus; Ritter, Eberhard, deceased; Westphal, Frank; and Wehmeier, Guido, 5,699,840, Cl. 141-313.000.
Wei, Yi-Hsiu, to International Business Machines Corporation. Method for creating stub file supporting remote procedure calls by generating common code including code utilized by stub procedures to invoke plurality of service procedures. 5,701,415, Cl. 395-200.090.
Weide, Nils Holger: *See—*
Herwegh, Felix; Weide, Nils Holger; and Schumann, Wolfgang, 5,700,491, Cl. 425-72.200.
Weidinger, Marc; and Kramer, Karl-Heinz, to Siemens Aktiengesellschaft. Flow-through DC voltage changer having a further output circuit. 5,701,238, Cl. 363-21.000.
Weidler, Charles Harry; Long, Michael David; and Moll, Hurley Chester, Jr., to Whitaker Corporation, The. Electrical connector with shield. 5,700,164, Cl. 439-607.000.
Weiler, Charles A., Jr.; and Bareno, Hendrik Pieter, to Ross Operating Vale Co. Fluid control valve with soft startup. 5,699,829, Cl. 137-383.000.
Weinbaum, David; Bar-On, Daniel; and Tamir, Yoav, to Mercury Interactive Corporation. System for tracking and replicating the operation of a cursor manipulation device. 5,701,139, Cl. 345-145.000.
Weinberg, Richard S.; and Thomas, James W., to Microbar Systems, Inc. Liquid auto-level apparatus and method. 5,700,401, Cl. 261-27.000.
Weinhardt, Robert; Lindfors, Allen J.; Rieger, James L., deceased (by Kent N. Birch, executor), to United States of America, Navy. Charge amplifier for blast gauges. 5,701,101, Cl. 327-561.000.
Weinstein, Steven J.: *See—*
Hoff, Joseph W.; Finnicum, Douglas S.; and Weinstein, Steven J., 5,700,524, Cl. 427-402.000.
Weisel, Jonathan E.: *See—*
Leitner, Horst; and Weisel, Jonathan E., 5,700,047, Cl. 296-26.000.
Weisenberger, Johannes: *See—*
Pieper, Helmut; Austel, Volkhard; Himmelsbach, Frank; Linz, Günter; Guth, Brian; and Weisenberger, Johannes, 5,700,801, Cl. 514-252.000.
Weiss, David: *See—*
Klimek, John Ramon; and Weiss, David, 5,701,334, Cl. 375-364.000.
Weisser, Frank J., Jr., to BellSouth Corporation. Mediation of open advanced intelligent network in SS7 protocol open access environment. 5,701,301, Cl. 370-428.000.
Weitkamp, Thomas Edward: *See—*
Miller, Derek; Weitkamp, Thomas Edward; and Brown, Steve, 5,699,651, Cl. 53-448.000.
Welch Allyn, Inc.: *See—*

Wood, Robert J.; Piloski, Michael J.; and Pasik, Gregory E., 5,701,155, Cl. 348-72.000.
Weldes, Helmut H.: *See—*
Hinterwaldner, Rudolph; and Weldes, Helmut H., 5,700,455, Cl. 424-70.140.
Welk, James E., to Alternative Safety Technologies. Railway crossing collision avoidance system. 5,699,986, Cl. 246-125.000.
Wells, James Allen: *See—*
Bott, Richard Ray; Caldwell, Robert Mark; Cunningham, Brian C.; Estell, David Aaron; Power, Scott Douglas; and Wells, James Allen, 5,700,676, Cl. 435-221.000.
Wells, Thomas J., to L&P Property Management Company. Aligned mattress spring core. 5,699,999, Cl. 267-103.000.
Welskopf, Fred: *See—*
Jahrsetz, Achim; Kleefeldt, Frank; Ostermann, Wilfried; and Welskopf, Fred, 5,699,685, Cl. 70-264.000.
Wendt, Alan C.: *See—*
Tinen, William J.; Singal, Pawan; Hooper, Douglas; and Wendt, Alan C., 5,699,641, Cl. 52-506.070.
Wenger Manufacturing Inc.: *See—*
Hauck, Bobbie W., 5,700,510, Cl. 426-516.000.
Wentsch, Siegfried: *See—*
Scheifele, Horst; Krieger, Eberhard; Heinisch, Ulrich; and Wentsch, Siegfried, 5,699,709, Cl. 83-236.000.
Wenzel, Donald E., to Hewlett-Packard Company. Anti-outgassing ink composition and method for using the same. 5,700,3[illegible]5, Cl. 106-31.580.
Werner, Georgina M.: *See—*
Davidson, Thomas Charles; and Werner, Georgina M., 5,700,460, Cl. 424-84.000.
Wesson, Albert Norman: *See—*
Clausen, Anthony Robin; and Wesson, Albert Norman, 5,700,232, Cl. 482-125.000.
West Coast Chain Mfg. Company: *See—*
Paugh, Edward C.; Leafstone, Harley W.; and Hortick, Nicholas P., 5,699,975, Cl. 242-371.000.
Western Atlas Inc.: *See—*
Hykes, Timothy W.; and Metzler, Joel, 5,700,[illegible]86, Cl. 451-406.000.
Western Litho Plate & Supply Co.: *See—*
Powers, John; Shelton, Teriy; and Gonseth, Michael, 5,701,170, Cl. 355-40.000.
Westinghouse Air Brake Company: *See—*
Jamieson, Paul E., 5,700,065, Cl. 303-19.000.
Jamieson, Paul E., 5,700,066, Cl. 303-19.000.
Westling, Mark E.; and Daniel, Steven G., to Vector Laboratories. Labeling nucleic acids. 5,700,921, Cl. 536-22.100.
Westphal, Frank: *See—*
Alberti, Klaus; Ritter, Eberhard, deceased; Westphal, Frank; and Wehmeier, Guido, 5,699,840, Cl. 141-313.000.
Westphalen, Karl-Otto: *See—*
Schäfer, Peter; Klintz, Ralf; Hamprecht, Gerhard; Heistracher, Elisabeth; Westphalen, Karl-Otto; Gerber, Matthias; and Walter, Helmut, 5,700,805, Cl. 514-269.000.
Wettengel, Paul F.: *See—*
Jenkins, Peter D.; and Wettengel, Paul F., 5,699,974, Cl. 242-361.400.
Wetters, John; Simmons, John Wayne; Fernandez, Virgilio Alejandro; Ahrens, Art; and Carsello, Steve, to Motorola, Inc. Radio receiver and method of calibrating same. 5,701,600, Cl. 455-208.000.
Wettstein, Arthur; and Moret, Gilbert, to Bühler AG. Cleaning and sorting bulk material. 5,699,724, Cl. 99-489.000.
Whalley, Eric T.: *See—*
Goodfellow, Val S.; Marathe, Manoj V.; Whalley, Eric T.; Fitzpatrick, Timothy D.; and Kuhlman, Karen G., 5,700,779, Cl. 514-14.000.
Wheeler, Richard L.: *See—*
Liou, Jiunn-Yau; Wheeler, Richard L.; Sen, Bidyut; and Parker, James C., Jr., 5,701,071, Cl. 323-220.000.
Whetsel, Lee D., to Texas Instruments Incorporated. Low overhead input and output boundary scan cells. 5,701,307, Cl. 371-22.300.
Whirlpool Corporation: *See—*
Hagemeyer Cook, Lori Ann; Guess, Ronald W.; and Williams, Stephen G., 5,701,235, Cl. 362-26.000.
Whitaker Corporation, The: *See—*
Bussard, John Rudell; and Yurko, Garold Michael, 5,700,156, Cl. 439-471.000.
Korsunsky, Iosif; Grabbe, Dimitry; and Schroepfer, Richard C., 5,700,151, Cl. 439-74.000.
Roberts, Larry G., 5,701,291, Cl. 370-232.000.
Weidler, Charles Harry; Long, Michael David; and Moll, Hurley Chester, Jr., 5,700,164, Cl. 439-607.000.
White, Christopher E., to Cyrix Corporation. Detecting segment limit violations for branch target when the branch unit does not supply the linear address. 5,701,448, Cl. 395-580.000.
White Consolidated Industries, Inc.: *See—*
Edwards, James M.; and Dries, John E., 5,700,329, Cl. 134-10.000.
Hakala, Kevin E.; Kunkel, Joseph D.; and Johnson, Glenn L., 5,699,677, Cl. 62-291.000.
White, Donald Andrew: *See—*
Arjunan, Palanisamy; and White, Donald Andrew, 5,700,871, Cl. 525-74.000.
White, Theresa: *See—*
Foody, Brian; Nicholson, Colin; Tolan, Jeffrey; and White, Theresa, 5,700,686, Cl. 435-263.000.
White, Weimar Weatherly: *See—*
Lok, Roger; and White, Weimar Weatherly, 5,700,631, Cl. 430-605.000.
Whitfield, Kenneth H.; and Aranyi, Ernie, to United States Surgical Corporation. Apparatus for applying surgical clips. 5,700,271, Cl. 606-143.000.
Whitney, Alan; Neeman, Yuval; Koneru, Sudheer; Shah, Milan; Cook, Peter J.; and Miller, Arnold S., to Microsoft Corporation. Distributed file system providing a unified name space with efficient name resolution. 5,701,462, Cl. 395-610.000.
Whittaker, Bruce Ernest, to Unisys Corporation. Method and system for randomly selecting a cache set for cache fill operations. 5,701,431, Cl. 395-455.000.
Wiatrowski, Dennis A.: *See—*
Nonweiler, Mark A.; Konrad, Gregory F.; and Wiatrowski, Dennis A., 5,700,522, Cl. 427-388.400.
Wibbeling, Reinhard: *See—*
Banemann, Reiner; Tenfelde, Bernd; and Wibbeling, Reinhard, 5,700,196, Cl. 464-36.000.
Wieloch, Christopher J., to Allen-Bradley Company, Inc. Method of making power substrate assembly. 5,699,609, Cl. 29-830.000.
Wieloch, Francis J.; LaManna, Gina M.; Jackson, Frank J., Jr.; Smallman, Gary W.; Kemp, Kenneth A.; Speakman, Edward J.; Grabowski, Edward F.; Street, Terry L.; Wisniewski, Carl A.; and Czerniawski, John A., to Xerox Corporation. Web system. 5,699,584, Cl. 15-256.520.
Wiesinger, Herbert: *See—*
Steinmeyer, Andreas; Neef, Gunter; Kirsch, Gerald; Schwarz, Katica; Thieroff-Ekerdt, Ruth; Wiesinger, Herbert; and Haberey, Martin, 5,700,791, Cl. 514-167.000.
Wiesmüller, Karl-Heinz: *See—*
Metzger, Jörg; Wiesmüller, Karl-Heinz; and Jung, Günther, 5,700,910, Cl. 530-338.000.
Wihk, Bernt E L, to Livingstones Patenter AB. Method and device for charging lead accumulators. 5,701,069, Cl. 320-21.000.
Wikstrom, Hakan: *See—*
Golman, Klaes; Andersson, Sven; Rise, Frode; Wistrand, Lars-Goran; and Wikstrom, Hakan, 5,700,448, Cl. 424-9.330.
Wilde, Craig G.: *See—*
Hawkins, Phillip R.; Wilde, Craig G.; and Seilhamer, Jeffrey J., 5,700,912, Cl. 530-350.000.
Wildman, Alexander J. Lingual bracket with hinged camming closure and releasable lock. 5,700,145, Cl. 433-10.000.
Wilhelm, Henning, to Polygram International Holding B.V. Two-stage injection-molding machine. 5,700,500, Cl. 425-572.000.
Wilhoit, Dennis Richard: *See—*
Fontana, Robert Edward, Jr.; Gurney, Bruce Alvin; Lin, Tsann; Speriosu, Virgil Simon; Tsang, Ching Hwa; and Wilhoit, Dennis Richard, 5,701,223, Cl. 360-113.000.
Wilkins, Judd R. Gelatin-plastic foam bird feeding station and process. 5,699,752, Cl. 119-51.030.
Wilkinson, Donald L.: *See—*
Johnson, Roy P.; and Wilkinson, Donald L., 5,700,190, Cl. 454-57.000.
Wilkinson, John W.; and Raburn, Richard W., to Span-America Medical Systems, Inc. Pressure relief valve vent line mattress system and method. 5,699,570, Cl. 5-713.000.
Wilkinson, William T. Weight loss garment. 5,700,231, Cl. 482-124.000.
Williams Electronics Games, Inc.: *See—*
Lawlor, Patrick; and Coriale, Matthew C., 5,700,008, Cl. 273-118.00A.
Williams, Kenneth Samuel: *See—*
Kuo, Lawrence Ln; Leung, Roger Yiming; and Williams, Kenneth Samuel, 5,700,893, Cl. 526-307.100.
Williams, Mark C.; and Price, Timothy W. Method and apparatus for providing real time data on a viewing screen concurrently with any programing in process. 5,701,161, Cl. 348-468.000.
Williams, Mark E.: *See—*
Trumper, David L.; and Williams, Mark E., 5,699,621, Cl. 33-1.00M.
Williams, Marvin L.: *See—*
Johnson, William J.; Keller, Robert Scott; Mantharuthil, George C.; and Williams, Marvin L., 5,701,510, Cl. 395-806.000.
Williams, Robert C.: *See—*
Lane, William F.; and Williams, Robert C., 5,699,927, Cl. 220-254.000.
Williams, Stephen G.: *See—*
Hagemeyer Cook, Lori Ann; Guess, Ronald W.; and Williams, Stephen G., 5,701,235, Cl. 362-26.000.
Williamson, Steven: *See—*
Miller, Scott; Brady, Don; Williamson, Steven; Luftig, Steven; and Musto, Dominick, 5,700,141, Cl. 431-125.000.
Miller, Scott; Brady, Don; Williamson, Steven; Luftig, Steven; and Musto, Dominick, 5,700,142, Cl. 431-125.000.
Williamson, William A., III, to BellSouth Corporation. Tone suppression automatic gain control for a headset. 5,701,352, Cl. 381-104.000.
Wills, David; and Bateman, Geoffrey Francis, to Anglia Autoflow Limited. Livestock handling apparatus and method. 5,699,755, Cl. 119-846.000.
Wilm, Claudia: *See—*
Osswald, Mathias; Dorsch, Dieter; Mederski, Werner; Wilm, Claudia; Schmitges, Claus J.; and Christadler, Maria, 5,700,807, Cl. 514-291.000.
Wilson, Howard: *See—*
Nedwek, David J.; Wilson, Howard; Nugent, Steve; and Dermer, Greg, 5,701,420, Cl. 395-284.000.
Wilson, John M.: *See—*
Cincotta, Anthony H.; Meier, Albert H.; and Wilson, John M., 5,700,795, Cl. 514-200.000.

Wilson, Michael, to Pitney Bowes Inc. Setting by phone for counter resettable postage meters. 5,701,250, Cl. 364-464.130.
Wilson, Syd R.: *See—*
Shin, Hank Hukyoo; Tracy, Clarence J.; Duffin, Robert L.; Freeman, John L., Jr.; Grivna, Gordon; and Wilson, Syd R., 5,700,721, Cl. 437-198.000.
Winfield Medical: *See—*
Sancoff, Gregory E.; Doyle, Mark C.; and Field, Frederic P., 5,700,245, Cl. 604-145.000.
Winkler-Gwienek, Wladis: *See—*
Hurst, Achim; Winkler-Gwienek, Wladis; Buchholz, Berthold; Bendix, Dieter; and Entenmann, Gunther, 5,700,901, Cl. 528-354.000.
Winner, Stephanie L.: *See—*
Kelley, Michael W.; and Winner, Stephanie L., 5,701,405, Cl. 395-141.000.
Winter, Andreas; Spaleck, Walter; and Bachmann, Bernd, to Hoechst Aktiengesellschaft. Process for the preparation of polyolefins. 5,700,886, Cl. 526-119.000.
Winter, Andreas: *See—*
Dolle, Volker; Rohrmann, Jürgen; Winter, Andreas; and Antberg, Martin, 5,700,896, Cl. 526-351.000.
Wipf, Peter: *See—*
Lazo, John S.; Rice, Robert L.; Cunningham, April; and Wipf, Peter, 5,700,821, Cl. 514-374.000.
Wisconsin Alumni Research Foundation: *See—*
Goodman, Steven L., 5,700,241, Cl. 604-93.000.
Gould, Michael N.; and Ariazi, Eric A., 5,700,644, Cl. 435-6.000.
Handelsman, Jo; Stabb, Eric V.; Jacobson, Lynn M.; Goodman, Robert M.; Johnson, David W.; and Smith, Kevin P., 5,700,462, Cl. 424-93.460.
Wisniewski, Carl A.: *See—*
Wieloch, Francis J.; LaManna, Gina M.; Jackson, Frank J., Jr.; Smallman, Gary W.; Kemp, Kenneth A.; Speakman, Edward J.; Grabowski, Edward F.; Street, Terry L.; Wisniewski, Carl A.; and Czerniawski, John A., 5,699,584, Cl. 15-256.520.
Wisniewski, Karen: *See—*
Thomas, Barbara; and Wisniewski, Karen, 5,700,331, Cl. 134-29.000.
Wistrand, Lars-Goran: *See—*
Golman, Klaes; Andersson, Sven; Rise, Frode; Wistrand, Lars-Goran; and Wikstrom, Hakan, 5,700,448, Cl. 424-9.330.
Witt, Bradley R. Router plate with removable inserts. 5,699,844, Cl. 144-329.000.
Witt, William L.: *See—*
Glover, Neal; Zook, Christopher P.; Schadegg, John; and Witt, William L., 5,701,304, Cl. 371-10.200.
Woco Franz-Josef Wolf & Co.: *See—*
Wolf, Franz Josef; Mohr, Martin; and Nix, Stefan, 5,700,000, Cl. 267-140.130.
Woerner, Bernhard; Haug, Kurt; Fabry, Thomas; Kusserow, Peter; and Jeaner, Bert, to Robert Bosch GmbH. Headlight for vehicle. 5,700,079, Cl. 362-80.000.
Wolf, Christoph; and Daus, Manfred, to Heraeus Noblelight GmbH. Immersion lamp for a photochemical reactor and its use. 5,701,050, Cl. 313-25.000.
Wolf, Franz Josef; Mohr, Martin; and Nix, Stefan, to Woco Franz-Josef Wolf & Co. Transversely compliant body spring for a hydraulic bearing. 5,700,000, Cl. 267-140.130.
Wolf, Scot G.: *See—*
Curro, John Joseph; Wolf, Scot G.; and King, Willie, 5,700,255, Cl. 604-385.200.
Wollny, Georg B.; and Chmiel, Marian. Internal combustion engine. 5,699,757, Cl. 123-18.00R.
Wolpe, Stephen D.; and Cerami, Anthony, to Rockefeller University, The. Method of ameliorating or preventing septic shock using a monoclonal antibody specific to cachectin/tumor necrosis factor. 5,700,466, Cl. 424-145.100.
Wolters, Henricus F. W.; Lane, Samuel L.; Buijs, Wim; Haasen, Nicolaas F.; and Herkes, Frank E., to DSM N.V.; and E. I. DuPont de Nemours & Company. Process for the preparation of epsilon-caprolactam and epsilon-caprolactam precursors. 5,700,934, Cl. 540-538.000.
Wömer, Günter: *See—*
Kosik, Franz; and Wömer, Günter, 5,700,227, Cl. 477-171.000.
Wong, Kenneth L., to Pacesetter, Inc. Surface mount component for selectively configuring a printed circuit board and method for using the same. 5,701,234, Cl. 361-773.000.
Wong, Richard J.: *See—*
Gordon, Kathryn E.; and Wong, Richard J., 5,701,027, Cl. 257-530.000.
Wong, Thomas K.; and Tock, Theron D., to Sun Microsystems, Inc. Multithreaded processing system having a cache that is commonly accessible to each thread. 5,701,432, Cl. 395-457.000.
Wong, Thomas T. Y., to Telecommunications Equipment Corporation. Multifunction interactive communications system with circularly/elliptically polarized signal transmission and reception. 5,701,591, Cl. 455-63.000.
Woo, Soon Hyung; Chung, Sung Kee; Ban, Soo Ho; Kim, Byoung Eog; and Kim, Si Hwan, to Pohang Iron & Steel Co., Ltd.; and Research Institute of Industrial Science & Technology. Cyclic lipid derivatives as potent PAF antagonists. 5,700,817, Cl. 514-340.000.
Wood, John M.; and Stewart, John T., to Nitrous Express, Inc. Nozzle for mixing oxidizer with fuel. 5,699,776, Cl. 123-531.000.
Wood, Keith V.: *See—*
McElroy, Marlene D., deceased; Helinski, Donald R.; Wood, Keith V.; De Wet, Jeffrey R.; Ow, David W.; and Howell, Stephen H., 5,700,673, Cl. 435-189.000.
Wood, Lawrence E.: *See—*
Federowicz, Michael G.; Fahy, Gregory M.; and Wood, Lawrence E., 5,700,828, Cl. 514-419.000.
Wood, Robert J.; Piloski, Michael J.; and Pasik, Gregory E., to Welch Allyn, Inc. Processor module for video inspection probe. 5,701,155, Cl. 348-72.000.
Wood, Sheila J., to United States of America, Army. Comprehensive identification scheme for pathogens. 5,700,646, Cl. 435-6.000.
Woodman, Peter, to Biochlor (Proprietary) Limited. Metering of liquids. 5,699,939, Cl. 222-166.000.
Woollums, David E.; and Foust, Gregory L., to Fisher Controls International, Inc. Prover adapter for a fluid metering device. 5,700,950, Cl. 73-3.000.
Wopker, Wilhelm: *See—*
Müller, Michael; Benz, Volker; Numrich, Uwe; Pühler, Horst; and Wopker, Wilhelm, 5,700,566, Cl. 428-332.000.
WorkTools, Inc.: *See—*
Marks, Joel Steven, 5,699,949, Cl. 227-132.000.
Wozney, John M.; and Celeste, Anthony J., to Genetics Institute, Inc. Bone morphogenetic protein -11 (BMP-11) compositions. 5,700,911, Cl. 530-350.000.
Wright, D. Craig, to Novavax, Inc. Lipid vesicles having a bilayer containing a surfactant with anti-viral and spermicidal activity. 5,700,679, Cl. 435-238.000.
Wright, Phillip Byron: *See—*
Portig, Harald; Schoedinger, Kevin Dean; Seman, Richard Andrew, Jr.; and Wright, Phillip Byron, 5,701,549, Cl. 399-36.000.
Wright, Robert David: *See—*
McDowall, Debra Jean; Sawyer, Lawrence Howell; Wright, Robert David; and Varona, Eugenio, 5,700,254, Cl. 604-378.000.
Wu, Chien-Ping; and Tsai, Chang-Da, to National Science Council. Second-order highpass difference filter. 5,701,100, Cl. 327-559.000.
Wu, Gay-May: *See—*
Crea, Roberto; Pang, Roy Hoi Loi; Oppermann, Hermann; Keck, Peter C.; Alvarado-Urbina, Gabriel; Wu, Gay-May; and Cohen, Charles M., 5,700,677, Cl. 435-226.000.
Wu, Jin Jwang; Cavaliere, William Albert; Norum, James Patrick; and Schmitz, Stefan, to International Business Machines Corporation. Cryogenic aerosol separator. 5,699,679, Cl. 62-617.000.
Wu, Mc-Gavour, to Hydrotek Corp. Sensor-type flush valve assembly with push button device for optional manual operation. 5,699,994, Cl. 251-129.030.
Wu, Wen-Teng: *See—*
Shiue, Ruey-Yun; Wu, Wen-Teng; Shieh, Pi-Chen; and Lin, Chin-Kai, 5,700,735, Cl. 438-612.000.
Wüster, Heinrich. Ventilated composter. 5,700,689, Cl. 435-290.100.
Wydra, Gerhard: *See—*
Puchinger, Franz; Rossman, Axel; Sikorski, Siegfried; and Wydra, Gerhard, 5,700,743, Cl. 442-243.000.
Wyman, Blair: *See—*
Bates, Cary Lee; and Wyman, Blair, 5,701,489, Cl. 395-705.000.
Xenova Limited: *See—*
Collins, Mark Anthony David; Chicarelli-Robinson, Maria Ines; Bryans, Justin Stephen; Brocchini, Stephen James; Latham, Christopher John; and Shaw, John Richardson, 5,700,804, Cl. 514-255.000.
Xerox Corporation: *See—*
Badesha, Santokh S.; Heeks, George J.; Henry, Arnold W.; and Chow, Che Chung, 5,700,568, Cl. 428-334.000.
Behe, Thomas J.; Gilmore, Daniel R., III; and Thayer, Bruce E., 5,701,572, Cl. 399-354.000.
Buhler, Steven A.; and Bahramian, Hamid T., 5,701,060, Cl. 315-227.00R.
Gheer, Barry J.; Rasch, Kenneth R.; Tress, Tab A.; and Geyer, Richard A., 5,700,994, Cl. 219-497.000.
Harrington, Steven J.; and Klassen, R. Victor, 5,701,365, Cl. 382-212.000.
Harrington, Steven J.; and Taber, Jean A., 5,701,401, Cl. 395-109.000.
Higuchi, Fumii; Ianni, John J.; Smith, Fraser S.; Hawkins, Michael G.; and Leonardo, Joseph L., 5,700,413, Cl. 264-145.000.
Morgan, Paul F., 5,701,565, Cl. 399-299.000.
Parker, Delmer G., 5,701,564, Cl. 399-285.000.
Plakosh, David, 5,701,151, Cl. 347-247.000.
Pontes, Fatima M.; Sacripante, Guerino G.; Drappel, Stephan V.; Paine, Anthony J.; and Kovacs, Gregory J., 5,700,316, Cl. 106-31.580.
Silence, Scott M.; Creatura, John A.; Hsieh, Bing R.; Ziolo, Ronald F.; and Ellis, Richard W., 5,700,615, Cl. 430-106.600.
Venable, Dennis L.; and Nagao, Takashi, 5,701,479, Cl. 395-670.000.
Webster, Marc W.; Saraswat, Vijay A.; Fromherz, Markus P. J.; Austin, John C.; Rulli, Paul A.; and McCue, Daniel Lawrence, III, 5,701,557, Cl. 399-77.000.
Wegman, Paul M., 5,699,842, Cl. 141-369.000.
Wieloch, Francis J.; LaManna, Gina M.; Jackson, Frank J., Jr.; Smallman, Gary W.; Kemp, Kenneth A.; Speakman, Edward J.; Grabowski, Edward F.; Street, Terry L.; Wisniewski, Carl A.; and Czerniawski, John A., 5,699,584, Cl. 15-256.520.
Xilinx, Inc.: *See—*
Kean, Thomas A., 5,701,091, Cl. 326-41.000.
Trimberger, Stephen M., 5,701,441, Cl. 395-500.000.

Ximea, Hongyu; Cecere, Michael A.; and Masnaghetti, Douglas, to Schlumberger Technologies Inc. Insulator deposition using focused ion beam. 5,700,526, Cl. 427-527.000.
Xu, Beilei; and Qian, Jianzhong, to Siemens Corporate Research, Inc. Automatic determination of the curved axis of a 3-D tube-shaped object in image volume. 5,699,799, Cl. 128-653.100.
Xu, Bu-Xin; and Tsavalas, Yannis P., to General Electric Company. Magnetic resonance imaging shimming by superconducting gradient shield. 5,701,075, Cl. 324-318.000.
Yabushita, Shuichi: *See—*
  Miura, Shinsuke; Itoi, Takeshi; and Yabushita, Shuichi, 5,701,257, Cl. 364-508.000.
Yabuta, Katsuhisa: *See—*
  Yamada, Tessho; Yabuta, Katsuhisa; Kawai, Takeshi; and Toyoda, Hideki, 5,700,367, Cl. 205-785.000.
Yagi, Sakai; Watanabe, Tamio; and Nagano, Toru, to Yazaki Corporation. Connector terminal checking device. 5,701,079, Cl. 324-538.000.
Yagi, Shuichi: *See—*
  Toyoda, Shigeru; Yagi, Shuichi; and Itagaki, Masaaki, 5,700,405, Cl. 264-35.000.
Yalamanchili, Gopichand: *See—*
  Phillion, Dennis Paul; Ruminski, Peter Gerrard; and Yalamanchili, Gopichand, 5,700,840, Cl. 514-628.000.
Yama, Yomiyuki: *See—*
  Ueda, Tetsuya; Shibata, Jun; and Yama, Yomiyuki, 5,701,033, Cl. 257-704.000.
Yamada, Hiroyuki: *See—*
  Saito, Yasuo; Tahara, Shigenori; Yamada, Hiroyuki; and Hohkita, Atsushi, 5,699,768, Cl. 123-400.000.
Yamada, Hisato; Hirano, Mitsuhisa; and Kojima, Yasukazu, to Yamaha Hatsudoki Kabushiki Kaisha. Exhaust system, hull, and speed indicator for watercraft. 5,699,749, Cl. 114-270.000.
Yamada, Ikuko: *See—*
  Kawahara, Megumi; Yamada, Ikuko; Shoshi, Masayuki; and Kojima, Akio, 5,700,614, Cl. 430-59.000.
Yamada, Masakatsu; Yokoyama, Minoru; and Kohno, Takeshi, to Canon Kabushiki Kaisha. Sheet feeding apparatus having means for determining the leading edge of a sheet. 5,701,547, Cl. 399-1.000.
Yamada, Sumito: *See—*
  Inoue, Rikio; and Yamada, Sumito, 5,700,630, Cl. 430-399.000.
Yamada, Tessho; Yabuta, Katsuhisa; Kawai, Takeshi; and Toyoda, Hideki, to NGK Spark Plug Co., Ltd. Method and apparatus for controlling the energizing of a heater in an oxygen sensor. 5,700,367, Cl. 205-785.000.
Yamada, Yukio; Asami, Osamu; Sugiyama, Hidehiko; Idekoba, Chie; Hoshino, Fumihiko; Hirai, Masana; Kajino, Tsutomu; Imaeda, Takao; and Sarai, Kiyoko, to Kabushiki Kaisha Toyota Chuo Kenkusho. Polypeptide possessing protein disulfide isomerase activity gene encoding the same and process for producing the same. 5,700,659, Cl. 435-69.100.
Yamagishi, Masahiro; Ueda, Makoto; Takai, Yukie; Yasuda, Mari; and Mikawa, Takashi, to Mitsubishi Chemical Corporation. Method for producing optically active ester of γ-substituted-β-hydroxybutyric acid. 5,700,670, Cl. 435-128.000.
Yamagishi, Yoji: *See—*
  Urawa, Yoshio; Furukawa, Ken; Shimizu, Toshikazu; Yamagishi, Yoji; Tsurugi, Tomio; and Ichino, Tomio, 5,700,938, Cl. 546-14.000.
Yamaguchi, Eiji: *See—*
  Hoshi, Hiroaki; Matsumura, Susumu; Yamamoto, Masakuni; and Yamaguchi, Eiji, 5,701,279, Cl. 369-13.000.
Yamaguchi, Hiroyuki: *See—*
  Saida, Kazunori; and Yamaguchi, Hiroyuki, 5,699,851, Cl. 165-42.000.
Yamaguchi, Ryosuke: *See—*
  Nakagawa, Tsuguhiko; Yamaguchi, Ryosuke; Osanai, Hisashi; Hasunuma, Junichi; and Yamamoto, Takemi, 5,700,420, Cl. 266-44.000.
Yamaguchi, Shiro; and Miyamoto, Masayoshi, to Kioritz Corporation. Two-stroke internal combustion engine. 5,699,761, Cl. 123-73.00A.
Yamaguchi, Yasunori: *See—*
  Oguchi, Satoshi; Ishihara, Masamichi; Ito, Kazuya; Murakami, Gen; Anjoh, Ichiro; Sakuta, Toshiyuki; Yamaguchi, Yasunori; Kasama, Yasuhiro; Udagawa, Tetsu; Miyamoto, Eiji; Matsuno, Youichi; Satoh, Hiroshi; and Nozoe, Atsusi, 5,701,031, Cl. 257-686.000.
Yamaha Corporation: *See—*
  Takechi, Kenjiro; Ishigaki, Yasuhiro; and Kojo, Hitomi, 5,700,210, Cl. 473-535.000.
  Yamazaki, Ryokichi; Sakai, Takeshi; and Kawakami, Fukushi, 5,700,052, Cl. 297-217.300.
Yamaha Hatsudoki Kabushiki Kaisha: *See—*
  Yamada, Hisato; Hirano, Mitsuhisa; and Kojima, Yasukazu, 5,699,749, Cl. 114-270.000.
Yamaichi Electronics Co., Ltd.: *See—*
  Matsuoka, Noriyuki, 5,700,155, Cl. 439-266.000.
  Miura, Shinsuke; Itoi, Takeshi; and Yabushita, Shuichi, 5,701,257, Cl. 364-508.000.
Yamaki, Rumi: *See—*
  Yamamoto, Masamitsu; and Yamaki, Rumi, 5,700,256, Cl. 604-397.000.
Yamamoto, Haunori, to Sony Corporation. Station device to which is connected an electronic apparatus such as tape recorder. 5,701,229, Cl. 361-617.000.
Yamamoto, Hiroshi; Takishima, Suguru; and Shinozaki, Shimpei, to Asahi Kogaku Kogyo Kabushiki Kaisha. Shutter mechanism for disk drive cartridge insertion opening. 5,701,216, Cl. 360-99.020.
Yamamoto, Keisuke; and Komatsu, Toshiyuki, to Canon Kabushiki Kaisha. Hydrogen storing member and process for storing hydrogen into the hydrogen storing member. 5,700,443, Cl. 423-647.700.
Yamamoto, Masakuni: *See—*
  Hoshi, Hiroaki; Matsumura, Susumu; Yamamoto, Masakuni; and Yamaguchi, Eiji, 5,701,279, Cl. 369-13.000.
Yamamoto, Masamitsu; and Yamaki, Rumi, to Uni-Charm Corporation. Disposable absorbent pad. 5,700,256, Cl. 604-397.000.
Yamamoto, Setsuko: *See—*
  Ogino, Kazuya; Yokoyama, Kaneo; Hayashi, Narutoshi; Omura, Takashi; and Yamamoto, Setsuko, 5,700,296, Cl. 8-489.000.
Yamamoto, Tadashi: *See—*
  Toyoshima, Kumao; Horiuchi, Ryuya; Yamauchi, Kiyoshi; Yamamoto, Tadashi; and Igarashi, Koichi, 5,700,678, Cl. 435-233.000.
Yamamoto, Takashi: *See—*
  Zeng, Weiping; Yamamoto, Takashi; Arata, Masami; and Banba, Tsuyoshi, 5,700,875, Cl. 525-301.000.
Yamamoto, Takemi: *See—*
  Nakagawa, Tsuguhiko; Yamaguchi, Ryosuke; Osanai, Hisashi; Hasunuma, Junichi; and Yamamoto, Takemi, 5,700,420, Cl. 266-44.000.
Yamamoto, Takeo: *See—*
  Honda, Takao; Yanagida, Makoto; Arahira, Fumihiro; and Yamamoto, Takeo, 5,701,551, Cl. 399-50.000.
Yamamoto, Toshihiko: *See—*
  Hatagishi, Yuji; Yamamoto, Toshihiko; Abe, Kimihiro; and Okabe, Toshiaki, 5,700,162, Cl. 439-595.000.
Yamamoto, Toshiyoshi: *See—*
  Ohmori, Koichi; Yamamoto, Toshiyoshi; Matsuda, Yuji; Tanji, Yoshihiko; and Yuuzu, Takayoshi, 5,701,011, Cl. 250-370.090.
Yamamoto, Yuichi; Tatsu, Haruyoshi; Alexeevaa, Volkova Margarita; Vasilyevich, Sokolov Sergey; and Vladimirovich, Veretennikov Nikolai, to Central Synthetic Rubbers Research Institute, The; and Nippon Mektron Limited. Fluorine-containing elastomer composition. 5,700,879, Cl. 525-353.000.
Yamamoto, Yukio: *See—*
  Fujita, Makoto; Yamamoto, Yukio; Sakate, Nobuo; and Hirabara, Shoji, 5,701,576, Cl. 419-29.000.
Yamanaka, Kiyoshi: *See—*
  Takashima, Youichi; Ishii, Shinji; and Yamanaka, Kiyoshi, 5,701,343, Cl. 380-4.000.
Yamanaka, Shigeaki, to Kubota Iron Works Co., Ltd. Method of and apparatus for forming a disc-shaped blank. 5,699,689, Cl. 72-68.000.
Yamanaka, Toshiaki: *See—*
  Ikeda, Shuji; Meguro, Satoshi; Hashiba, Soichiro; Kuramoto, Isamu; Koike, Atsuyoshi; Sasaki, Katsuro; Ishibashi, Koichiro; Yamanaka, Toshiaki; Hashimoto, Naotaka; Moriwaki, Nobuyuki; Takahashi, Shigeru; Hiraishi, Atsushi; Kobayashi, Yutaka; and Yukutake, Seigou, 5,700,704, Cl. 437-52.000.
  Meguro, Satoshi; Uchibori, Kiyofumi; Suzuki, Norio; Motoyoshi, Makoto; Koike, Atsuyoshi; Yamanaka, Toshiaki; Sakai, Yoshio; Kaga, Toru; Hashimoto, Naotaka; Hashimoto, Takashi; Honjou, Shigeru; and Minato, Osamu, 5,700,705, Cl. 437-52.000.
Yamane, Kazuyasu; and Orimoto, Takashi, to Casio Computer Co., Ltd. Information providing systems and portable electronic devices. 5,701,580, Cl. 455-3.100.
Yamane, Koichi: *See—*
  Uchinami, Masanobu; Yamane, Koichi; and Fukui, Wataru, 5,699,769, Cl. 123-414.000.
Yamano, Shozo: *See—*
  Kusaka, Yosuke; Uchiyama, Shigeyuki; Yamano, Shozo; and Narisawa, Tsutomu, 5,701,524, Cl. 396-123.000.
Yamashita, Shigeki; Hirayama, Yoshiyuki; and Suzuki, Kazuhiro, to Fuji Xerox Co., Ltd. Image data parallel processing apparatus. 5,701,505, Cl. 395-800.000.
Yamashita, Toshihiro: *See—*
  Kubo, Masumi; Akebi, Yasunobu; and Yamashita, Toshihiro, 5,701,165, Cl. 349-5.000.
Yamauchi, Hideyuki, to NEC Corporation. Reliable burst signal detecting apparatus. 5,701,296, Cl. 370-282.000.
Yamauchi, Kiyoshi: *See—*
  Toyoshima, Kumao; Horiuchi, Ryuya; Yamauchi, Kiyoshi; Yamamoto, Tadashi; and Igarashi, Koichi, 5,700,678, Cl. 435-233.000.
Yamauchi, Satoshi; Tamura, Hiroshi; Katooka, Takashi; Tsumura, Naoki; Hikichi, Naoto; Narumi, Chihiro; Ezaki, Takashi; Kudo, Shozo; and Ooguro, Yoshihisa, to Ricoh Company, Ltd. Telecommunication apparatus having a capability of translation. 5,701,497, Cl. 395-753.000.
Yamauchi, Shunji, to Mitsubishi Denki Kabushiki Kaisha. Method of resin sealing an object with apparatus including a gas spring. 5,700,001, Cl. 267-224.000.
Yamazaki, Kazuyuki: *See—*
  Moriya, Yukio; Koyanagi, Satoru; Fujimura, Tetsuya; Nagahama, Masayuki; Yamazaki, Kazuyuki; and Hishiyama, Toru, 5,699,873, Cl. 180-402.000.
Yamazaki, Ryokichi; Sakai, Takeshi; and Kawakami, Fukushi, to Yamaha Corporation. Chair for an acoustically designed building. 5,700,052, Cl. 297-217.300.
Yamazaki, Shiro; Shibata, Naoki; and Koike, Masayoshi, to Toyoda Gosei Co., Ltd. Light emitting semiconductor device using group III nitride compound and method of producing the same. 5,700,713, Cl. 437-129.000.

Yamazaki, Shunpei; and Arai, Yasuyuki, to Semiconductor Energy Laboratory Co., Ltd. Thin-film photoelectric conversion device and a method of manufacturing the same. 5,700,333, Cl. 136-258.000.
Yamazaki, Shunpei, to Semiconductor Energy Laboratory Co., Ltd. LCD having a peripheral circuit with TFTs having the same structure as TFTs in the display region. 5,701,167, Cl. 349-42.000.
Yamazaki, Youichi: *See—*
  Yokonuma, Norikazu; Kazami, Kazuyuki; Yamazaki, Youichi; and Hibino, Hideo, 5,701,529, Cl. 396-310.000.
Yan, Lin: *See—*
  Kahne, Daniel E.; Goodnow, Robert A., Jr.; Taylor, Carol M.; and Yan, Lin, 5,700,916, Cl. 536-1.110.
Yan, Ying: *See—*
  Amin, Nurul; Bortins, John; and Yan, Ying, 5,699,605, Cl. 29-603.140.
Yan, Zhu: *See—*
  Matsuo, Mamoru; and Yan, Zhu, 5,700,424, Cl. 266-108.000.
Yanagida, Makoto: *See—*
  Honda, Takao; Yanagida, Makoto; Arahira, Fumihiro; and Yamamoto, Takeo, 5,701,551, Cl. 399-50.000.
Yanai, Shigeo: *See—*
  Iga, Katsumi; Yanai, Shigeo; Okabe, Keiichiro; and Itoh, Masaki, 5,700,481, Cl. 424-449.000.
Yang, Gyun Seog: *See—*
  Lee, Geum Ock; and Yang, Gyun Seog, 5,701,262, Cl. 364-724.190.
Yang, Jialin; Leydorf, George Fredric, Jr.; and Anderson, Richard Walter, to Ford Global Technologies, Inc. Cooling system for internal combustion engine. 5,699,760, Cl. 123-41.740.
Yang, Jun Hyun, to Samsung Electronics Co., Ltd. Switching power supply. 5,701,237, Cl. 363-20.000.
Yang, Jun-mo: *See—*
  Park, Chang-won; Yang, Jun-mo; and Lee, Joon-bae, 5,701,054, Cl. 313-467.000.
Yang, Li-xi: *See—*
  Hofer, Kurt G.; and Yang, Li-xi, 5,700,825, Cl. 514-397.000.
Yang, Sen: *See—*
  Sargeant, Steven J.; Behan, Niall D.; Atherton, Dave; Yang, Sen; Huang, Miaoling; and Sun, Kang, 5,700,582, Cl. 420-476.600.
Yang, Tzung-Zu: *See—*
  Wang, Wen Chun; and Yang, Tzung-Zu, 5,700,175, Cl. 445-24.000.
Yang, Xingbo: *See—*
  Okumura, Yoshinobu; and Yang, Xingbo, 5,700,593, Cl. 428-694.0TS.
Yang, Yali, to Plastic Advanced Recycling Corp. Catalyst for treatment of waste plastics and method of manufacturing the same. 5,700,751, Cl. 502-255.000.
Yang, Yu-Chung; Bennett, Frances K.; and Paul, Stephan R., to Genetics Institute, Inc. Mammalian cytokine, IL-11. 5,700,664, Cl. 435-69.520.
Yanmar Agricultural Equipment Co., Ltd.: *See—*
  Hamada, Kenji; Kirihata, Toshinori; Kamikubo, Keita; Takagi, Mikio; Nakamura, Masami; Narahara, Youzaburo; and Kawasaki, Koichi, 5,699,656, Cl. 56-11.100.
Yano, Hiroyuki: *See—*
  Ikeda, Atsuhiko; Ozaki, Masami; Honami, Reijiro; Yumita, Takashi; Yano, Hiroyuki; Nakano, Yuki; Kurihara, Yutaka; and Hirano, Tadayoshi, 5,700,824, Cl. 514-383.000.
Yano, Masami; and Takami, Masato, to Fukuda Metal Foil and Powder Co., Ltd. Method of treating copper foil for printed circuits. 5,700,362, Cl. 205-191.000.
Yano, Nobuyuki, to Nidek Co., Ltd. Slit lamp microscope provided with a confocal scanning mechanism. 5,701,197, Cl. 359-389.000.
Yassinzadeh, Zia; and Lingane, Paul J., to Yassinzadeh, Zia. Sample collection and manipulation method. 5,700,695, Cl. 436-180.000.
Yasuda, Kenichi: *See—*
  Nogami, Tadahiko; Nakamura, Ichiro; Hiraku, Kenji; Sadamori, Hiroyuki; Yasuda, Kenichi; Narita, Kenjiro; Horii, Kenji; and Shimogama, Hironori, 5,699,693, Cl. 72-199.000.
Yasuda, Kyouyu: *See—*
  Nishikawa, Michinori; Miyamoto, Tsuyoshi; Kawamura, Shigeo; Yasuda, Kyouyu; Mutsuga, Yasuaki; and Matsuki, Yasuo, 5,700,860, Cl. 524-317.000.
Yasuda, Mari: *See—*
  Yamagishi, Masahiro; Ueda, Makoto; Takai, Yukie; Yasuda, Mari; and Mikawa, Takashi, 5,700,670, Cl. 435-128.000.
Yasuda, Yuichi: *See—*
  Uchio, Masatoshi; and Yasuda, Yuichi, 5,701,187, Cl. 359-143.000.
Yasuhara, Shinji: *See—*
  Chikamori, Akira; and Yasuhara, Shinji, 5,700,115, Cl. 408-126.000.
Yasui, Mototada, to Fuji Photo Film Co., Ltd. Photographic film cassette and production method therefor. 5,701,538, Cl. 396-512.000.
Yasukawa, Manabu; Horiguchi, Chiyoharu; and Koishi, Musubu, to Hamamatsu Photonics K.K. Optical source position adjustment device. 5,700,084, Cl. 362-275.000.
Yasuura, Hiroyuki: *See—*
  Nakamichi, Kouichi; Izumi, Shougo; and Yasuura, Hiroyuki, 5,700,410, Cl. 264-122.000.
Yazaki Corporation: *See—*
  Hatagishi, Yuji; Yamamoto, Toshihiko; Abe, Kimihiro; and Okabe, Toshiaki, 5,700,162, Cl. 439-595.000.
  Okabe, Toshiaki, 5,700,163, Cl. 439-596.000.
  Yagi, Sakai; Watanabe, Tamio; and Nagano, Toru, 5,701,079, Cl. 324-538.000.
Yazawa, Masamitsu: *See—*
  Matsumoto, Hidetoshi; Yazawa, Masamitsu; and Hiruma, Kenji, 5,701,019, Cl. 257-192.000.
Yazki Corporation: *See—*
  Kawamura, Akihisa; Ishikawa, Satoshi; and Iizuka, Hiroaki, 5,700,153, Cl. 439-164.000.
Yde, Birgitte: *See—*
  Schneider, Palle; Conrad, Lars Sparre; Ebdrup, Søren; and Yde, Birgitte, 5,700,769, Cl. 510-305.000.
Yeh, Ching Hua; and Chen, Shun-Long, to Taiwan Semiconductor Manufacturing Company Ltd. Template mask for assisting in optical inspection of oxidation induced stacking fault (OISF). 5,701,174, Cl. 356-237.000.
Yeh, Wei-Kun: *See—*
  Chiang, An-Min; and Yeh, Wei-Kun, 5,700,739, Cl. 438-655.000.
Yein, Fredrick S.: *See—*
  Lu, Carrie J.; and Yein, Fredrick S., 5,700,653, Cl. 435-15.000.
Yen, Ying-Tzu: *See—*
  Lee, Jian-Huei; Yen, Ying-Tzu; and Peng, Ping-Hui, 5,700,729, Cl. 438-230.000.
Yesberg, John Desborough: *See—*
  Anderson, Mark Stephen; Yesberg, John Desborough; Pope, Michael; Nayda, Lisa; Hayman, Ken; and Beahan, Brendan, 5,701,342, Cl. 380-4.000.
Yeung, Pak-Ho, to National Semiconductor Corporation. AC bypass circuit which provides stabilization of high frequency transient noise. 5,701,098, Cl. 327-538.000.
Yin, Patrick, to Aspec Technology, Inc. Cell architecture for mixed signal applications. 5,701,021, Cl. 257-208.000.
Yissum Research Development Company, Hebrew University of Jerusalem: *See—*
  Hirth, Klaus Peter; Schwartz, Donna Pruess; Mann, Elaina; Shawver, Laura Kay; Kéri, György; Székely, István; Bajor, Tamás; Haimichael, Janis; Orfi, László; Levitzki, Alex; Gazit, Aviv; Ullrich, Axel; and Lammers, Reiner, 5,700,823, Cl. 514-380.000.
Yiu, Tom Dang-hsing: *See—*
  Takata, Akira; Hikawa, Tetsuo; Sawada, Takashi; Yiu, Tom Dang-hsing; and Ni, Ful-Long, 5,700,975, Cl. 174-52.400.
YKK Corporation: *See—*
  Johnson, David; and Ashman, James, 5,700,340, Cl. 156-152.000.
  Shimono, Muchiji, 5,699,592, Cl. 24-432.000.
Yoda, Yasuo: *See—*
  Hiroshima, Koichi; Nishimura, Katsuhiko; Kosaka, Toru; and Yoda, Yasuo, 5,701,568, Cl. 399-302.000.
Yokohama Rubber Co., Ltd., The: *See—*
  Sohma, Masahiko; Zushi, Osamu; Machijima, Kenji; and Tsutsumi, Hisao, 5,700,126, Cl. 414-416.000.
  Sugiura, Michihiko, 5,700,209, Cl. 473-380.000.
Yokomizo, Hirohiko: *See—*
  Takenishi, Soichiro; Suzuki, Osamu; Yokomizo, Hirohiko; Ichihara, Tatsuo; Masuda, Gen; Nakajima, Namiko; and Komiya, Kazuko, 5,700,935, Cl. 544-139.000.
Yokonuma, Norikazu; Kazami, Kazuyuki; Yamazaki, Youichi; and Hibino, Hideo, to Nikon Corporation. Information recording apparatus. 5,701,529, Cl. 396-310.000.
Yokoshima & Company: *See—*
  Kamiyama, Takao; and Yokoshima, Yasuhiro, 5,700,110, Cl. 405-154.000.
Yokoshima, Yasuhiro: *See—*
  Kamiyama, Takao; and Yokoshima, Yasuhiro, 5,700,110, Cl. 405-154.000.
Yokotani, Shigeki: *See—*
  Oguma, Toshio; Okazaki, Yoshinobu; Tada, Osamu; and Yokotani, Shigeki, 5,701,443, Cl. 395-500.000.
Yokouchi, Hideya, to Seiko Epson Corporation. Disk chucking mechanism and drive pin structure having chucking lever movable in two degrees of freedom. 5,701,217, Cl. 360-99.050.
Yokoyama, Kaneo: *See—*
  Ogino, Kazuya; Yokoyama, Kaneo; Hayashi, Narutoshi; Omura, Takashi; and Yamamoto, Setsuko, 5,700,296, Cl. 8-489.000.
Yokoyama, Minoru: *See—*
  Yamada, Masakatsu; Yokoyama, Minoru; and Kohno, Takeshi, 5,701,547, Cl. 399-1.000.
Yokoyama, Satoshi; Sakane, Shinsuke; and Kamikado, Masaru, to Aisin Seiki Kabushiki Kaisha. Anti-skid control system for an automotive vehicle. 5,700,069, Cl. 303-115.200.
Yokoyama, Shoji: *See—*
  Kuboyama, Kimimasa; Yokoyama, Shoji; Miyakoshi, Yoshinori; Taniguchi, Hiroya; Tsuruta, Kazuhiro; and Goto, Hisashi, 5,699,655, Cl. 53-540.000.
Yokozawa, Shinjiro; Kodama, Nobumasa; and Ogawara, Toshiki, to Sanyo Denki Co., Ltd. Axial flow air fan having lateral suction and discharge ports for cooling electronic components. 5,701,045, Cl. 310-62.000.
Yokozeki, Akimichi: *See—*
  Shiflett, Mark Brandon; and Yokozeki, Akimichi, 5,700,388, Cl. 252-67.000.
Yoneda, Mikio: *See—*
  Kitaguchi, Tooru; and Yoneda, Mikio, 5,700,565, Cl. 428-332.000.
Yonekawa, Masao; Majima, Yoshihiro; Miwa, Makoto; Minagawa, Kazuji; and Oi, Kiyotoshi, to Nippondenso Co., Ltd. Fuel supply system for engines with fuel pressure control. 5,699,772, Cl. 123-497.000.

Yoneyama, Akira, to Matsushita Electric Industrial Co., Ltd. Recording and reproducing apparatus and method for compressed video signal. 5,701,386, Cl. 386-909.000.
Yoneyama, Shuji: *See—*
Hasushita, Sachio; Yoneyama, Shuji; Maruyama, Koichi; and Ito, Takayuki, 5,701,205, Cl. 359-691.000.
Yong, Dennis; Cheng, Viktor Choong-Hung; Lim, Lit; and Tay, Siew Choon, to Singapore Computer Systems Limited. Apparatus and method for end user queries. 5,701,466, Cl. 395-611.000.
Yoon, InBae. Multifunctional devices for use in endoscopic surgical procedures and method therefor. 5,700,239, Cl. 604-22.000.
Yoon, Myeong Sik: *See—*
Lee, Kwang Hyuk; Choi, Seung Sub; and Yoon, Myeong Sik, 5,700,932, Cl. 540-223.000.
Yoshibe, Koushi; and Kanno, Hideo, to Nikon Corporation. Lens barrel having a manually focusing ring. 5,701,209, Cl. 359-823.000.
Yoshida, Masanobu: *See—*
Akaogi, Takao; and Yoshida, Masanobu, 5,701,274, Cl. 365-230.010.
Yoshida, Takeo; Azechi, Syuuichi; and Shiobara, Toshio, to Shin-Etsu Chemical Co., Ltd. Silicone rubber compositions. 5,700,853, Cl. 523-212.000.
Yoshida, Toyohiko: *See—*
Matsuo, Masahito; and Yoshida, Toyohiko, 5,701,449, Cl. 395-586.000.
Yoshii, Fumihiko: *See—*
Ikoma, Munehisa; Akutsu, Norikatsu; Enokido, Masashi; Yoshii, Fumihiko; Kaiya, Hideo; and Tsuda, Shingo, 5,700,596, Cl. 429-206.000.
Yoshikuni, Yoshiaki: *See—*
Hasegawa, Akira; Kiso, Makato; and Yoshikuni, Yoshiaki, 5,700,918, Cl. 536-18.700.
Yoshimori, Masanori, to NEC Corporation. Semiconductor integrated circuit device and fabrication method therefor. 5,701,025, Cl. 257-379.000.
Yoshimura, Yukio, to Kabushiki Kaisha Komatsu Seisakusho. Method and system for constructing the figures of blanks in sheet metal work. 5,701,251, Cl. 364-474.240.
Yoshioka, Hitoshi, to Canon Kabushiki Kaisha. Illumination system and exposure apparatus with demountable transparent protective member. 5,701,169, Cl. 355-30.000.
Yoshioka, Takashi: *See—*
Kukino, Satoru; Nakai, Tetsuo; Goto, Mitsuhiro; Yoshioka, Takashi; and Setoyama, Makoto, 5,700,551, Cl. 428-212.000.
Yoshioka, Yasuo: *See—*
Oishi, Tadahiro; Onishi, Toshifumi; and Yoshioka, Yasuo, 5,701,002, Cl. [illegible]
Yoshiuchi, Katsuhiro; Kageyama, Hiroshi; and Nishi, Yoko, to Mita Industrial Co., Ltd. Image forming apparatus adapted to feed continuous rolled-sheet paper by controlling slack in the paper for the accurate cutting thereof. 5,701,573, Cl. 399-384.000.
You, Chin-San. Fiber Braid Material. 5,700,533, Cl. 428-36.300.
Youn, Myung Joong; Moon, Gun Woo; and Kim, Marn Go, to Korea Telecommunication Authority. High-power factor series resonant rectifier circuit. 5,701,243, Cl. 363-89.000.
Young, Douglas B.: *See—*
Bishai, William R.; Young, Douglas B.; Zhang, Ying; and DeMaio, James, 5,700,925, Cl. 536-23.100.
Young, James E.; and Meyer, Roy A. Island form. 5,700,106, Cl. 404-8.000.
Young, Winnie: *See—*
Korney, Arthur F., Jr.; Sexton, Earl H., III; and Young, Winnie, 5,700,578, Cl. 428-421.000.
Youngs, Amy May: *See—*
Arndt, Richard Louis; Nicholson, James Otto; Silha, Edward John; Thurber, Steven Mark; and Youngs, Amy May, 5,701,495, Cl. 395-736.000.
Yowell, Donald H. Infant bedding apparatus. 5,699,571, Cl. 5-724.000.
Yu, Chen-Hua; and Jang, Syun-Ming, to Taiwan Semiconductor Manufactured Company Ltd. PECVD silicon nitride for etch stop mask and ozone TEOS pattern sensitivity elimination. 5,700,737, Cl. 438-636.000.
Yu, David U. L.; and Bullock, Donald L., to Duly Research Inc. Device for trapping laser pulses in an optical delay line. 5,701,317, Cl. 372-5.000.
Yu, Hideo: *See—*
Bisaiji, Takashi; Yu, Hideo; Kawaishi, Yasunori; Motohashi, Toshiaki; Takahashi, Mitsuru; and Kamiyama, Hideki, 5,701,566, Cl. 399-[illegible]
Yuan, Chris: *See—*
Perelman, Roberto; and Yuan, Chris, 5,701,120, Cl. 340-825.020.
Yue, Jiang; Dew, Lisa Renee; and Bissett, Donald Lynn, to Procter & Gamble Company, The. Sunscreen composition. 5,700,451, Cl. 424-59.000.
Yuito, Isamu: *See—*
Taniyama, Akira; Morijiri, Makoto; Tanaka, Haruko; Yuito, Isamu; Ashida, Eiji; Koyanagi, Hiroaki; Tanabe, Hideo; and Kobayashi, Tetsuo, 5,701,221, Cl. 360-113.000.
Yukutake, Seigou: *See—*
Ikeda, Shuji; Meguro, Satoshi; Hashiba, Soichiro; Kuramoto, Isamu; Koike, Atsuyoshi; Sasaki, Katsuro; Ishibashi, Koichiro; Yamanaka, Toshiaki; Hashimoto, Naotaka; Moriwaki, Nobuyuki; Takahashi, Shigeru; Hiraishi, Atsushi; Kobayashi, Yutaka; and Yukutake, Seigou, 5,700,704, Cl. 437-52.000.
Yumita, Takashi: *See—*
Ikeda, Atsuhiko; Ozaki, Masami; Honami, Reijiro; Yumita, Takashi; Yano, Hiroyuki; Nakano, Yuki; Kurihara, Yutaka; and Hirano, Tadayoshi, 5,700,824, Cl. 514-383.000.
Yung, Jimmy Siu Yim; and McNair, John Duncan, to Chiaphua Industries Limited. Coffee making machines. 5,699,718, Cl. 99-292.000.
Yurko, Garold Michael: *See—*
Bussard, John Rudell; and Yurko, Garold Michael, 5,700,156, Cl. 439-471.000.
Yusa, Hiroshi: *See—*
Kasuya, Takashige; Tamura, Osamu; Yusa, Hiroshi; Kobori, Takakuni; and Katada, Masaichiro, 5,700,616, Cl. 430-110.000.
Yuuzu, Takayoshi: *See—*
Ohmori, Koichi; Yamamoto, Toshiyoshi; Matsuda, Yuji; Tanji, Yoshihiko; and Yuuzu, Takayoshi, 5,701,011, Cl. 250-370.090.
Yuzurihara, Hiroshi; Inoue, Shunsuke; Miyawaki, Mamoru; and Matsumoto, Shigeyuki, to Canon Kabushiki Kaisha. Semiconductor device and method for producing the same. 5,700,719, Cl. 437-193.000.
Zabara, Jacob. Heart rhythm stabilization using a neurocybernetic prosthesis. 5,700,282, Cl. 607-9.000.
Zajaczkowski, Michael J.; and Stutzman, Barbara A., to Adhesives Research, Inc. Method of preparation of water-soluble copolymer. 5,700,873, Cl. 525-283.000.
Zalewski, Wojciech T.; Steele, Guy; and MacKenzie, Christopher J., to Safe-T-Vans, Inc. Vehicle body lowering system. 5,700,026, Cl. 280-704.000.
Zalud, Christopher Michael: *See—*
Borthwick, James Thomas, Jr.; and Zalud, Christopher Michael, 5,701,084, Cl. 324-690.000.
Zamolo, Craig J.: *See—*
O'Dell, Ronald J.; and Zamolo, Craig J., 5,699,747, Cl. 128-869.000.
Zamora, Paul O.; and Freer, Richard J., to Rhomed Incorporated. Chemotactic peptide pharmaceutical applications. 5,700,444, Cl. 424-1.690.
Zander, Dennis Roland: *See—*
Balling, Edward Norman; Smart, David Clinton; Dussinger, Thomas Edgar; and Zander, Dennis Roland, 5,701,536, Cl. 396-396.000.
Zander, Richard A.; and McKenzie, Jeffrey S. Chrome polish/exhaust pipe de-bluer. 5,700,303, Cl. 51-309.000.
Zandt, Lisa: *See—*
Pahuski, Edward E.; Dimond, Randall L.; Priest, John H.; Zandt, Lisa; Stebnitz, Kathleen K.; and Mendoza, Leopoldo G., 5,700,645, Cl. 435-6.000.
Zauner, Stefan: *See—*
Gaus, Rainer; Zauner, Stefan; and Gesell, Günther, 5,699,624, Cl. 33-787.000.
Zavislan, James M.: *See—*
Kostizak, David A.; and Zavislan, James M., 5,701,175, Cl. 356-326.000.
Zeman, Robert E.: *See—*
Bucks, Rodney R.; Dwyer, Patricia A.; Tombs, Thomas N.; Vreeland, William B.; Zeman, Robert E.; and May, John W., 5,701,567, Cl. 399-302.000.
Zen Research N.V.: *See—*
Alon, Amir; Heiman, Arie; and Katz, Itzhak, 5,701,283, Cl. 369-44.410.
Zeneca Limited: *See—*
Brown, Frederick Jeffrey; Russell, Keith; and Warwick, Paul James, Jr., 5,700,798, Cl. 514-229.800.
Payne, John David, 5,700,742, Cl. 442-123.000.
Thetford, Dean; and Schofield, John David, 5,700,395, Cl. 252-309.000.
Zeng, Weiping; Yamamoto, Takashi; Arata, Masami; and Banba, Tsuyoshi, to Sun Medical Co., Ltd. Adhesive composition for dental treatment. 5,700,875, Cl. 525-301.000.
Zenke, Masanobu, to NEC Corporation. Process of fabricating capacitor having waved rough surface of accumulating electrode. 5,700,710, Cl. 437-60.000.
Zenke, Masanobu, to NEC Corporation. Method for producing a semiconductor device. 5,700,738, Cl. 438-653.000.
Zerhouni, Elias A.: *See—*
Atalar, Ergin; Bottomley, Paul A.; and Zerhouni, Elias A., 5,699,801, Cl. 128-653.200.
Zettlmeissl, Gerd; Karges, Hermann Erich; and Becker, Achim, to Behringwerke Aktiengesellschaft. Mutants of human antithrobin III and methods for their production. 5,700,663, Cl. 435-69.600.
Zexel Corporation: *See—*
Ueda, Atsushi, 5,699,963, Cl. 239-88.000.
ZF Friedrichshafen AG: *See—*
Dreier, Loren Christopher, 5,699,877, Cl. 184-11.200.
Legner, Jürgen, 5,700,220, Cl. 475-129.000.
Zha, Xuegin: *See—*
Fuchs, Helmut; and Zha, Xuegin, 5,700,527, Cl. 428-34.400.
Zhang, Xuguang: *See—*
Sridhar, Ramalingam; and Zhang, Xuguang, 5,701,094, Cl. 326-113.000.
Zhang, Ying: *See—*
Bishai, William R.; Young, Douglas B.; Zhang, Ying; and DeMaio, James, 5,700,925, Cl. 536-23.100.
Zhao, William J.: *See—*
Stone, Lawrence H.; Zhao, William J.; and Alamzad, Hossein, 5,700,497, Cl. 425-222.000.
Zhong, Qiming; Sacken, Ulrich Von; Gao, Yuan; and Dahn, Jeffery Raymond, to Moli Energy (1990) Limited. Method for preparing $Li_{1+x}Mn_{2-x-y}M_yO_4$ for use in lithium batteries. 5,700,597, Cl. 429-218.000.
Zhou, Zheng; and Zou, Zailan, to Guangzhou Institute of Geochemistry Chinese Academy of Sciences. Process for adsorboaggregational flotation of Carlin type natural gold ore dressing. 5,700,369, Cl. 209-166.000.
Zhu, Gang, to Elscint Ltd. Spectral component separation including unwrapping of the phase via a poisson equation utilizing a weighting map. 5,701,074, Cl. 324-307.000.

Ziecker, Roger A.: *See—*
Siddiqui, Shahid A.; Ziecker, Roger A.; Wagner, Karen M.; and Nassar, Jocelyne, 5,699,938, Cl. 222-146.500.
Ziefle, Rainer: *See—*
Ahrens, Harald; Tiebel, Rainer; and Ziefle, Rainer, 5,699,742, Cl. [illegible]
Ziegler, Carl Bernard: *See—*
Feigelson, Gregg Brian; Curran, William V.; and Ziegler, Carl Bernard, 5,700,930, Cl. 540-200.000.
Zierhut, Clarence: *See—*
Frye, Lloyd H.; and Zierhut, Clarence, 5,699,908, Cl. 206-355.000.
Zieve, Peter B. Multiple axis yoke for large scale workpiece assembly systems. 5,699,599, Cl. 29-34.00B.
Zimmer, Inc.: *See—*
Bertin, Kim C., 5,700,268, Cl. 606-102.000.
Zimmerman, Robert LeRoy: *See—*
Grigsby, Robert Allison, Jr.; and Zimmerman, Robert LeRoy, 5,700,846, Cl. 521-128.000.
Ziolo, Ronald F.: *See—*
Silence, Scott M.; Creatura, John A.; Hsieh, Bing R.; Ziolo, Ronald F.; and Ellis, Richard W., 5,700,615, Cl. 430-106.600.
Zivkovic, Alexandre; Meynckens, Jean-Pierre; and Somerhausen, Bernard, to Glaverbel. Method and powder mixture for repairing oxide based refractory bodies. 5,700,309, Cl. 75-252.000.
Zon, Leonard; and Richardson, Paul, to Children's Medical Center Corporation, The. Tbc1 gene and uses thereof. 5,700,927, Cl. 536-23.500.
Zook, Christopher P.: *See—*
Armstrong, Alan J.; and Zook, Christopher P., 5,701,314, Cl. 371-40.500
Glover, Neal; Zook, Christopher P.; Schadegg, John; and Witt, William L., 5,701,304, Cl. 371-10.200.
Zorner, Paul S.: *See—*
Caulder, Jerry; Crowley, R. Hugh; Zorner, Paul S.; and Evans, Steven L., 5,700,759, Cl. 504-133.000.
Zoski, Glenn D.: *See—*
Ghaed, Ali; Leland, Jonathan K.; Zoski, Glenn D.; Goodman, Jack E.; and Grosser, John T., 5,700,427, Cl. 422-52.000.
Zou, Zailan: *See—*
Zhou, Zheng; and Zou, Zailan, 5,700,369, Cl. 209-166.000.
Zucherman, James F.; and Hsu, Ken Y. Apparatus and method for preparing a site for an interbody fusion implant. 5,700,264, Cl. 606-79.000.
Zulian, Ferruccio; Ramolini, Angelo; Bagnoli, Carlo; and Lazzari, Angelo, to Bull HN Information Systems Italia S.p.A. Multi-processor system with shared memory. 5,701,413, Cl. 395-200.020.
Zushi, Osamu: *See—*
Sohma, Masahiko; Zushi, Osamu; Machijima, Kenji; and Tsutsumi, Hisao, 5,700,126, Cl. 414-416.000.
Zweckform Büro-Produkte GmbH: *See—*
Galsterer, Wolfgang; Schlegel, Andreas; and Utz, Martin, 5,700,535, Cl. 428-40.100.
Zwick, Nicholas, to Dialogic Corporation. AD-HOC conferencing method. 5,701,340, Cl. 379-204.000.
ZymoGenetics, Inc.: *See—*
Kawasaki, Glenn, 5,700,643, Cl. 435-6.000.
Zysman, Milton. Manufacture of pocket spring assemblies. 5,699,998, Cl. 267-189.000.
Zyzyck, Len: *See—*
Jakubicki, Gary; McCandish, Elizabeth; Zyzyck, Len; and Drapier, Julien, 5,700,773, Cl. 510-426.000.
2 M Tool Co., Inc.: *See—*
Mihailovic, Vladan, 5,699,970, Cl. 241-82.500.
3dLabs Inc. Ltd.: *See—*
Baldwin, David Robert, 5,701,444, Cl. 395-506.000.
9000-9226 Quebec Inc.: *See—*
Masse, Robert; Dion, Alain; Bessette, Robert; and Tran, Khiem, 5,700,494, Cl. 425-131.100.

LIST OF REISSUE PATENTEES

TO WHOM

PATENTS WERE ISSUED ON THE 23rd DAY OF DECEMBER, 1997

NOTE— Arranged in accordance with the first significant character or word of the name (in accordance with city and telephone directory practice).

Behe, Thomas J.; Folkins, Jeffrey J.; Lioy, Gerald T.; Brewington, Grace T.; Schram, Joseph G.; and Wayman, William H., to Xerox Corporation. Donor roll for scavengeless development in a xerographic apparatus. RE. 35,698, Cl. 399-286.000.
Brewington, Grace T.: *See—*
Behe, Thomas J.; Folkins, Jeffrey J.; Lioy, Gerald T.; Brewington, Grace T.; Schram, Joseph G.; and Wayman, William H., RE. 35,698, Cl. 399-286.000.
Folkins, Jeffrey J.: *See—*
Behe, Thomas J.; Folkins, Jeffrey J.; Lioy, Gerald T.; Brewington, Grace T.; Schram, Joseph G.; and Wayman, William H., RE. 35,698, Cl. 399-286.000.
Goransson, Leif: *See—*
Lange, Stefan; Lonnroth, Ivar; Martinsson, Kjell; and Goransson, Leif, RE. 35,699, Cl. 426-2.000.
Grasso, Giorgio; and Righetti, Aldo, to Pirelli Cavi S.p.A. Unit for amplifying light signals in optical fiber transmission lines. RE. 35,697, Cl. 385-24.000.
Lange, Stefan; Lonnroth, Ivar; Martinsson, Kjell; and Goransson, Leif, to Svenska Lantmannens Riksforbund UPA. Process to correct and optimize the composition of feed. RE. 35,699, Cl. 426-2.000.
Lioy, Gerald T.: *See—*
Behe, Thomas J.; Folkins, Jeffrey J.; Lioy, Gerald T.; Brewington, Grace T.; Schram, Joseph G.; and Wayman, William H., RE. 35,698, Cl. 399-286.000.
Lonnroth, Ivar: *See—*
Lange, Stefan; Lonnroth, Ivar; Martinsson, Kjell; and Goransson, Leif, RE. 35,699, Cl. 426-2.000.
Martinsson, Kjell: *See—*
Lange, Stefan; Lonnroth, Ivar; Martinsson, Kjell; and Goransson, Leif, RE. 35,699, Cl. 426-2.000.
Mikus, Thomas, to Shell Oil Company. Heat injection process. RE. 35,696, Cl. 166-303.000.
Pirelli Cavi S.p.A.: *See—*
Grasso, Giorgio; and Righetti, Aldo, RE. 35,697, Cl. 385-24.000.
Righetti, Aldo: *See—*
Grasso, Giorgio; and Righetti, Aldo, RE. 35,697, Cl. 385-24.000.
Schram, Joseph G.: *See—*
Behe, Thomas J.; Folkins, Jeffrey J.; Lioy, Gerald T.; Brewington, Grace T.; Schram, Joseph G.; and Wayman, William H., RE. 35,698, Cl. 399-286.000.
Shell Oil Company: *See—*
Mikus, Thomas, RE. 35,696, Cl. 166-303.000.
Svenska Lantmannens Riksforbund UPA: *See—*
Lange, Stefan; Lonnroth, Ivar; Martinsson, Kjell; and Goransson, Leif, RE. 35,699, Cl. 426-2.000.
Wayman, William H.: *See—*
Behe, Thomas J.; Folkins, Jeffrey J.; Lioy, Gerald T.; Brewington, Grace T.; Schram, Joseph G.; and Wayman, William H., RE. 35,698, Cl. 399-286.000.
Xerox Corporation: *See—*
Behe, Thomas J.; Folkins, Jeffrey J.; Lioy, Gerald T.; Brewington, Grace T.; Schram, Joseph G.; and Wayman, William H., RE. 35,698, Cl. 399-286.000.

LIST OF REEXAMINATION PATENTEES

TO WHOM

CERTIFICATES WERE ISSUED

Asahi/America, Inc.: *See—*
Ziu, Christopher G., B1 930,544, Cl. 138-113.000.
Boyle, William M. Video time code synchronized robot control apparatus. B1 255,096, Cl. 348-95.000.
Englund, Richard L.; and Schwartz, Thomas W., to Minnesota Mining and Manufacturing Company. Compound, glazing or polishing pad. B1 396,737, Cl. 451-28.000.
Furukawa Electric Co., Ltd.: *See—*
Konishi, Kenjiro; and Obata, Ken, B1 806,123, Cl. 439-595.000.
Haloila, Matti, to Newtec International S.A. Packaging machine. B1 587,796, Cl. 53-588.000.
Konishi, Kenjiro; and Obata, Ken, to Furukawa Electric Co., Ltd. Electrical connector device with a number of terminals. B1 806,123, Cl. 439-595.000.
Minnesota Mining and Manufacturing Company: *See—*
Englund, Richard L.; and Schwartz, Thomas W., B1 396,737, Cl. 451-28.000.
Rising, Rolf C., B1 961,230, Cl. 381-69.200.
Newtec International S.A.: *See—*
Haloila, Matti; B1 587,796, Cl. 53-588.000.
Obata, Ken: *See—*
Konishi, Kenjiro; and Obata, Ken, B1 806,123, Cl. 439-595.000.
Rising, Rolf C., to Minnesota Mining and Manufacturing Company. Hearing aid programming interface. B1 961,230, Cl. 381-69.200.
Schwartz, Thomas W.: *See—*
Englund, Richard L.; and Schwartz, Thomas W., B1 396,737, Cl. 451-28.000.
Ziu, Christopher G., to Asahi/America, Inc. Double-containment thermoplastic pipe assembly. B1 930,544, Cl. 138-113.000.

LIST OF DESIGN PATENTEES

A/S Modulex: *See—*
Rath, Klaus Peter, 388,124, Cl. D20-42.000.
Rath, Klaus Peter, 388,125, Cl. D20-42.000.
Rath, Klaus Peter, 388,126, Cl. D20-42.000.
Abed, Tark: *See—*
Kawauchi, Masahiko; Sato, Tadamitsu; Petermann, J. Scott; and Abed, Tark, 388,065, Cl. D14-114.000.
After Shave Products, Inc.: *See—*
Hoyt, Earl, 387,995, Cl. D9-566.000.
Agie, A.G. für Industrielle Elektronik: *See—*
Mariotta, Marco, 388,055, Cl. D13-163.000.
Akabane, Jun: *See—*
Ono, Arata; and Akabane, Jun, 388,104, Cl. D16-134.000.
Albert, Gary M. Hanger. 387,911, Cl. D6-317.000.
Alps Electric (USA), Inc.: *See—*
Kawauchi, Masahiko; Sato, Tadamitsu; Petermann, J. Scott; and Abed, Tark, 388,065, Cl. D14-114.000.
Amber Diamonds Inc.: *See—*
Itzkowitz, Israel, 388,015, Cl. D11-90.000.
Amco Corporation: *See—*
Bentson, Wade S., 387,949, Cl. D7-409.000.
ANTEC Corp.: *See—*
Tuvy, Avraham; and DiLonardo, Michael P., 388,061, Cl. D13-152.000.
Apolinski, Edmund; and Daniels, David R., to Wolfcraft, Inc. Corner sander attachment. 387,962, Cl. D8-70.000.
Armbrecht, Dieter: *See—*
Beermann, Frank; Rager, Bernd; and Armbrecht, Dieter, 387,914, Cl. D6-356.000.
Asahi Tec Corporation: *See—*
Sakagami, Tetsuya; and Terao, Hitoshi, 388,045, Cl. D12-209.000.
Astra Aktiebolag: *See—*
Källgren, Eva, 387,977, Cl. D9-348.000.
Bachmayer, Nicolaus, to Soehnle-Waagen GmbH & Co. Kitchen scale. 388,003, Cl. D10-91.000.
Baker, D. Michael; and Wright, Archer D., to Credo Tool Company. Product display hangers. 387,932, Cl. D6-566.000.
Balatti, Aldo: *See—*
Gagnon, Hubert; and Balatti, Aldo, 387,956, Cl. D7-653.000.
Ball, Alan: *See—*
Swift, Philip W.; and Ball, Alan, 388,076, Cl. D14-116.000.

Ballone, Michael P.: *See—*
Grossman, M. Gary; Meisner, Edward H.; Ballone, Michael P.; and Kiely, John E., 388,209, Cl. D26-63.000.
Bardsley, Henry: *See—*
Ritchie, Ian; Gustafson, Kathryn; and Bardsley, Henry, 388,192, Cl. D25-127.000.
Barney, Ward W.; McLonis, Mark R.; Smith, Steven L.; Wooldridge, Ernest L.; York, Walter A.; and Young, H. Theodore, to McGaw, Inc. Flexible multiple compartment medical container. 388,168, Cl. D24-118.000.
Barry, Barbara, to Boyd Lighting Company. Lamp with tapered hexagonal stem. 388,222, Cl. D26-112.000.
Barry, Barbara, to Boyd Lighting Company. Tapered hexagonal stem for lamp. 388,224, Cl. D26-153.000.
Batesville Casket Company, Inc.: *See—*
Saaf, Patrick Michael; and Schultz, Scott Alan, 388,225, Cl. D99-12.000.
Bath & Body Works, Inc.: *See—*
Workman, Bradley P.; and Nilssen, Kenneth H., 387,993, Cl. D9-542.000.
Bathum, Dale. Sandal upper. 387,893, Cl. D2-969.000.
Bauer, Witold; and Sindelar, Mark, to Moen Incorporated. Wall mount faucet body. 388,157, Cl. D23-238.000.
Bayer, William; Ferland, Albert J.; Klock, Paul; Maruska, Joshua; and Thornton, James B., to PSC, Inc. Bar code scanner. 388,075, Cl. D14-116.000.
Bayerische Motoren Werke Aktiengesellschaft: *See—*
Powell, Mark, 387,905, Cl. D3-281.000.
Be-Yang Industrial Corp.: *See—*
Yang, Roger, 388,210, Cl. D26-65.000.
Yang, Roger, 388,211, Cl. D26-65.000.
Bear, Hillard, to KKH Corp. Ornamental child's foldable seat cushion in the fanciful form of a frog. 387,934, Cl. D6-598.000.
Beasley, Jeff Robert: *See—*
Tokiyama, Masaru; Blatt, David Isaac; Beasley, Jeff Robert; and Henning, Michael Scott, 388,094, Cl. D14-226.000.
Beaulieu, Jocelyn: *See—*
Tedesco, Romeo; and Beaulieu, Jocelyn, 387,917, Cl. D6-366.000.
Beene, Jamie M. Gumball tricks machine. 388,122, Cl. D20-7.000.
Beermann, Frank; Rager, Bernd; and Armbrecht, Dieter, to Keiper Recaro GmbH & Co. Vehicle seat. 387,914, Cl. D6-356.000.
Bell Helicopter Textron Inc.: *See—*
Taylor, Rodney Sherwood; Collins, Bobby Alton; Hazen, Timothy Myron; and Joiner, Walter Charles, 388,048, Cl. D12-328.000.
Benbow, Michael; and Dettmar, Gary. Jug. 387,947, Cl. D7-319.000.
Benchetrit, Michel; Boukobza, Thierry; and Luciani, Jean-Michel. Spinning top with detachable card. 388,135, Cl. D21-95.000.
Bender, Thomas M.: *See—*
Fitten, Timothy E.; Lay, Dieter F.; and Bender, Thomas M., 387,988, Cl. D9-504.000.
Bentson, Wade S., to Amco Corporation. Roast rack. 387,949, Cl. D7-409.000.
Berti, Enzo, to Libman Company, The. Pivot-handled broom. 387,910, Cl. D4-199.000.
Bjørnskov-Bartholdy, Lone: *See—*
Nielsen, Jacob; Bjørnskov-Bartholdy, Lone; and Nielsen, Per Steen, 388,140, Cl. D21-148.000.
Black & Decker Inc.: *See—*
Carbone, Richard J.; and Kaiser, David W., 388,206, Cl. D26-43.000.
Hippen, Jan, 387,944, Cl. D7-309.000.
Hippen, Jan, 387,945, Cl. D7-309.000.
Hippen, Jan, 387,946, Cl. D7-309.000.
Rorke, Anthony Brooks; DuBois, Craig A.; and Swyst, Thomas, 388,205, Cl. D26-43.000.
Zurwelle, Donald W., 388,201, Cl. D26-37.000.
Blaesing, Jeffry L. End table for storing a cool chest. 387,926, Cl. D6-445.000.
Blatt, David Isaac: *See—*
Tokiyama, Masaru; Blatt, David Isaac; Beasley, Jeff Robert; and Henning, Michael Scott, 388,094, Cl. D14-226.000.
Bobson Hygiene International Inc.: *See—*
Chen, Cheng-Chang, 387,931, Cl. D6-545.000.
Bond, C. Ward; and Crandall, William, to Talking Signs, Inc. Hollow cover for a lightwave source. 388,088, Cl. D14-155.000.
Bond, Marc Andrew, to British Gas PLC. Game board solution. 388,130, Cl. D21-31.000.
Bonko, Mark Leonard, to Goodyear Tire & Rubber Company, The. Tread for a tire. 388,032, Cl. D12-146.000.
Boukobza, Thierry: *See—*
Benchetrit, Michel; Boukobza, Thierry; and Luciani, Jean-Michel, 388,135, Cl. D21-95.000.
Bourgeois, Daniel: *See—*
Lanoix, Réal; Doyon, Jean-Christophe; Collin, Gilles; and Bourgeois, Daniel, 388,138, Cl. D21-143.000.
Bowman, Tim: *See—*
Faulconer, Mark; and Bowman, Tim, 387,890, Cl. D2-953.000.
Boyd, Celia J. Set of bedding. 387,936, Cl. D6-599.000.
Boyd Lighting Company: *See—*
Barry, Barbara, 388,222, Cl. D26-112.000.
Barry, Barbara, 388,224, Cl. D26-153.000.
Briant, Antoine. Cleated shoe sole. 387,892, Cl. D2-962.000.
Bright Yin Huey Co., Ltd.: *See—*
Hsu, Keen, 388,215, Cl. D26-85.000.
Hsu, Keen, 388,216, Cl. D26-85.000.
Hsu, Keen, 388,217, Cl. D26-85.000.
Hsu, Keen, 388,218, Cl. D26-87.000.
Hsu, Keen, 388,219, Cl. D26-87.000.
Hsu, Keen, 388,220, Cl. D26-87.000.
British Gas PLC: *See—*
Bond, Marc Andrew, 388,130, Cl. D21-31.000.
Brohard, Bonnie J.; Fouke, Herbert A.; and Koloski, Peter A., to Holophane Corporation. Parking lot luminaire. 388,212, Cl. D26-71.000.
Bronze, Gorham: *See—*
Cardosi, Leo, 388,197, Cl. D26-9.000.
Brown, Stephanie Carol: *See—*
Rohweder, Efimia Ellen; Miller, Frederick William; Kolowski, Michael Alois; Brown, Stephanie Carol; and Maxwell, Paul Bryan, 388,037, Cl. D12-147.000.
Bruner, Jeanie; and Bruner, Richard S. Disposable vehicle seat shield. 387,940, Cl. D6-611.000.
Bruner, Richard S.: *See—*
Bruner, Jeanie; and Bruner, Richard S., 387,940, Cl. D6-611.000.
Caesar, Marie. Domino scorekeeping board and storage case. 388,002, Cl. D10-46.100.
Campilan, Rolando Rico L., to Timex Corporation. Bezel ring for a watch. 388,009, Cl. D10-128.000.
Canon Kabushiki Kaisha: *See—*
Kimura, Hiroyuki; and Matsumoto, Toshio, 388,109, Cl. D16-217.000.
Tanaka, Chifuyu, 388,106, Cl. D16-202.000.
Canton Gongora, Antonio; Cruz Fernandez, Carlos Jesús; Muñagorri Enriquez, José Maria; and Rayo Ortigüela, Juan Carlos, to Telefonica de Espana, S.A. Vertical support. 387,927, Cl. D6-495.000.
Caradonna, Robert; and Stairs, Daniel. Blood loss estimator. 388,167, Cl. D24-107.000.
Carbone, Richard J.; and Kaiser, David W., to Black & Decker Inc. Flashlight. 388,206, Cl. D26-43.000.
Cardosi, Leo, to Bronze, Gorham. Candle holder. 388,197, Cl. D26-9.000.
Catalina Lighting, Inc.: *See—*
Nichols, Ron, 388,208, Cl. D26-54.000.
Cavallone, Frank J., Sr. Skill game. 388,127, Cl. D21-5.000.
Cazin-Bourguignon, Jean Francois: *See—*
Scheuren, Daniel; Cazin-Bourguignon, Jean Francois; Robert, Michel Pierre Charles; and de Barsy, Olivier, 388,033, Cl. D12-146.000.
Celaschi, David M.; and Celaschi, Suzanne M. Ear protector for eyeglasses. 388,115, Cl. D16-338.000.
Celaschi, Suzanne M.: *See—*
Celaschi, David M.; and Celaschi, Suzanne M., 388,115, Cl. D16-338.000.
CertainTeed Corporation: *See—*
Hannah, Marcia G.; Noone, Michael J.; Stahl, Kermit E.; Mehrer, George W.; and Quaranta, Joseph, 388,195, Cl. D25-139.000.
Chahed, Khaled, to Parfums Jean Jacques Vivier. Combined perfume bottle and closure. 387,989, Cl. D9-517.000.
Chahed, Khaled, to Parfums Jean Jacques Vivier. Combined perfume bottle and closure. 387,991, Cl. D9-519.000.
Chan, Raymond, to IDT International Limited. Clock. 387,996, Cl. D10-18.000.
Chang, Thomas: *See—*
Chen, Tony; Chang, Thomas; and Wu, Jesse, 388,067, Cl. D14-114.000.
Ché Enterprizes Inc.: *See—*
Ellis, Charles H.; and Washington, Byron S., 387,901, Cl. D3-226.000.
Chen, Cheng-Chang, to Bobson Hygiene International Inc. Soap dispenser. 387,931, Cl. D6-545.000.
Chen, Tony; Chang, Thomas; and Wu, Jesse, to UMAX Data Systems, Inc. Video frame grabber. 388,067, Cl. D14-114.000.
Chiu, Bernard; Wang, Jui-Shang; Longan, John; Marvin, Robert L., Jr.; and O'Grady, Richard M., to Duracraft Corp. Humidifier. 388,162, Cl. D23-356.000.
Chong, Joan K.L.: *See—*
Chow, Chi K.W.; Chong, Joan K.L.; and Wai, Maisy M.S., 388,120, Cl. D19-60.000.
Chopard Holding S.A.: *See—*
Scheufele, Caroline, 388,010, Cl. D11-26.000.
Chow, Chi K.W.; Chong, Joan K.L.; and Wai, Maisy M.S., to Vtech Industries, LLC. Electronic educational game housing. 388,120, Cl. D19-60.000.
Chung, Johnny. Coin phone. 388,083, Cl. D14-146.000.
Cipes, Bret, to E-Z Kare Good Health Systems, Inc. Nasal dilator. 388,172, Cl. D24-135.000.
Citizen Watch Co., Ltd.: *See—*
Oba, Haruya, 388,204, Cl. D10-39.000.
Clark, Stephen. Nail cap attachment for nail gun. 387,963, Cl. D8-70.000.
Clement, Conrad Dean, to Featherlite Mfg., Inc. Side wall for a spread axle trailer. 388,024, Cl. D12-97.000.
Clothesmate Products, Inc.: *See—*
Stewart, James W., 387,929, Cl. D6-513.000.
Cobarrubias, Lani Encena, to Timex Corporation. Casing for a watch. 387,999, Cl. D10-30.000.
Collette, Jacques: *See—*
Le, Phuoc Thuan; and Collette, Jacques, 388,034, Cl. D12-146.000.
Collin, Gilles: *See—*
Lanoix, Réal; Doyon, Jean-Christophe; Collin, Gilles; and Bourgeois, Daniel, 388,138, Cl. D21-143.000.

Collins, Bobby Alton: See—
Taylor, Rodney Sherwood; Collins, Bobby Alton; Hazen, Timothy Myron; and Joiner, Walter Charles, 388,048, Cl. D12-328.000.
Conair Corporation: See—
Constantine, Richard; and Solomita, Anthony, 388,086, Cl. D14-150.000.
Constantine, Richard; and Solomita, Anthony, to Conair Corporation. Telephone. 388,086, Cl. D14-150.000.
Cooper, Aaron Alexander Carroll, to Nike, Inc. Portion of a shoe outsole. 387,895, Cl. D2-960.000.
Copal Company Limited: See—
Sukumoda, Katsuyuki; Okonogi, Tatsuya; and Yoshikawa, Yukio, 388,123, Cl. D20-10.000.
Coppola, Bruce E. Contractor's radio. 388,092, Cl. D14-196.000.
Couch, Michael L., to North Communications, Inc. Multimedia kiosk. 388,229, Cl. D99-28.000.
Cousins, Morison S., to Dart Industries Inc. Sandwich spreader. 387,959, Cl. D7-696.000.
Crandall, William: See—
Bond, C. Ward; and Crandall, William, 388,088, Cl. D14-155.000.
Credo Tool Company: See—
Baker, D. Michael; and Wright, Archer D., 387,932, Cl. D6-566.000.
Croissant, Bernard: See—
Heinen, Richard; Harpes, Pierre; Klepper, Alain Alphonse Zelie Samuel; and Croissant, Bernard, 388,035, Cl. D12-147.000.
Cross, Jesse L. Surface pattern for a tire sidewall. 388,041, Cl. D12-152.000.
Crowley, Kevin J., to Fila U.S.A., Inc. Shoe upper element. 387,894, Cl. D2-972.000.
Cruz Fernandez, Carlos Jesús: See—
Canton Gongora, Antonio; Cruz Fernandez, Carlos Jesús; Muñagorri Enriquez, José Maria; and Rayo Ortigüela, Juan Carlos, 387,927, Cl. D6-495.000.
Cunning, Joseph M., to Holmes Products Corp. Window fan. 388,163, Cl. D23-370.000.
Daewoo Telecom Ltd.: See—
Kim, Gi-Soo, 388,063, Cl. D14-106.000.
D'Agostino, Victor, to PFT Enterprises, Inc. Clip on golf ball holder. 387,900, Cl. D3-221.000.
Dallman, Ernest R.; and Wehr, Franklin W., to Dallman, Ernest R. Automatic teller machine cabinet. 388,227, Cl. D99-28.000.
Dallman, Ernest R. Automatic teller machine cabinet. 388,228, Cl. D99-28.000.
Daniels, David R.: See—
Apolinski, Edmund; and Daniels, David R., 387,962, Cl. D8-70.000.
Dardashti, Shahriar. Double column storage tower. 387,942, Cl. D6-630.000.
Dart Industries Inc.: See—
Cousins, Morison S., 387,959, Cl. D7-696.000.
Davandian Limited: See—
Payton, David Michael; McDougall, Andrew Charles; and Mayes, Peter Figaro, 388,181, Cl. D25-121.000.
Payton, David Michael; and McDougall, Andrew Charles, 388,182, Cl. D25-121.000.
Payton, David Michael; McDougall, Andrew Charles; and Mayes, Peter Figaro, 388,183, Cl. D25-121.000.
Davis, John C.: See—
Magee, Paul D.; Delaney, Dan J.; Liesner, Kevin R.; Wetrich, Brian S.; Kerstetter, Tim E.; and Davis, John C., 388,231, Cl. D99-28.000.
de Barsy, Olivier, to Goodyear Tire & Rubber Company, The. Tire tread. 388,040, Cl. D12-147.000.
de Barsy, Olivier: See—
Scheuren, Daniel; Cazin-Bourguignon, Jean Francois; Robert, Michel Pierre Charles; and de Barsy, Olivier, 388,033, Cl. D12-146.000.
DeBrady, Davis T. Decorative flatware. 387,954, Cl. D7-645.000.
DeCola, Jim: See—
Van Halen, Edward; Peavey, Hartley D.; and DeCola, Jim, 388,117, Cl. D17-20.000.
DEFA Group, A.S.: See—
Eidsvig, Terje, 388,054, Cl. D13-133.000.
DeFur, Billy J. ATV (all-terrain vehicle) handlebar muff. 388,026, Cl. D12-114.000.
Delaney, Dan J.: See—
Magee, Paul D.; Delaney, Dan J.; Liesner, Kevin R.; Wetrich, Brian S.; Kerstetter, Tim E.; and Davis, John C., 388,231, Cl. D99-28.000.
Desanta, Simon. Chair. 387,918, Cl. D6-372.000.
Desiano, Frank Michael; Jackson, Mark William; Muenkel, Gerard Francis; and Smalley, Douglas Alexander, to International Business Machines Corporation. Electronic data processing equipment cabinet. 388,062, Cl. D14-102.000.
Designs for Vision, Inc.: See—
Feinbloom, Richard E., 388,113, Cl. D16-309.000.
Dettmar, Gary: See—
Benbow, Michael; and Dettmar, Gary, 387,947, Cl. D7-319.000.
Dewey, Donald. Combined back pack and back rest. 387,896, Cl. D3-214.000.
Dexter Automatic Products Company: See—
Nemeckay, Stephen A., 387,971, Cl. D8-354.000.
Diamantis, Perry W.; Folkes, Donovan M.; McCay, James Edward; and Messina, Sebastian J., Jr., to Lucent Technologies Inc. Telephone base. 388,085, Cl. D14-149.000.
Diamantis, Perry W.; Folkes, Donovan M.; McCay, James Edward; and Messina, Sebastian J., Jr., to Lucent Technologies Inc. Telephone base. 388,087, Cl. D14-151.000.
Diem, David W., to Performance Marketing. Console insert. 388,050, Cl. D12-419.000.
DiLonardo, Michael P.: See—
Tuvy, Avraham; and DiLonardo, Michael P., 388,061, Cl. D13-152.000.
Dinand, Pierre, to Euroitalia S.r.l. Combined container and cap for hygienic and cosmetic products. 387,990, Cl. D9-519.000.
Dobashi, Toshiyuki, to Seiko Instruments Inc. Watchcase. 387,997, Cl. D10-30.000.
Dolan, John W., to W. L. Gore & Associates, Inc. Display container for dental floss packages. 387,979, Cl. D9-415.000.
Dormon, Nicholas Q.; and Oetman, David A., to Steelcase Inc. Partition holder. 387,922, Cl. D6-418.000.
Doughty, Frederic C.; and Mark, Darren M., to Emhart Inc. Faucet with pull-out spout. 388,158, Cl. D23-238.000.
Doyon, Jean-Christophe: See—
Lanoix, Réal; Doyon, Jean-Christophe; Collin, Gilles; and Bourgeois, Daniel, 388,138, Cl. D21-143.000.
Dragon, Paul D.; and Meikrantz, Edward T. Adjustable handle grip. 387,968, Cl. D8-107.000.
DuBois, Craig A.: See—
Rorke, Anthony Brooks; DuBois, Craig A.; and Swyst, Thomas, 388,205, Cl. D26-43.000.
Dunipace, David Bruce, to Innova Champion Discs, Inc. Flying disc. 388,134, Cl. D21-86.000.
Duracraft Corp.: See—
Chiu, Bernard; Wang, Jui-Shang; Longan, John; Marvin, Robert L., Jr.; and O'Grady, Richard M., 388,162, Cl. D23-356.000.
E-Z Kare Good Health Systems, Inc.: See—
Cipes, Bret, 388,172, Cl. D24-135.000.
Effron, Louis R. Rack for elongated object. 387,933, Cl. D6-566.000.
Eidsvig, Terje, to DEFA Group, A.S. Plug for apparatus intake. 388,054, Cl. D13-133.000.
Electricite de France: See—
Ritchie, Ian; Gustafson, Kathryn; and Bardsley, Henry, 388,192, Cl. D25-127.000.
Ellis, Charles H.; and Washington, Byron S., to Ché Enterprizes Inc. Shoulder pouch. 387,901, Cl. D3-226.000.
Elwell, Dennis L.; and Sills, Robert L., to Putco, Inc. Decorative top edge cover for pickup truck side walls. 388,043, Cl. D12-190.000.
Emhart Inc.: See—
Doughty, Frederic C.; and Mark, Darren M., 388,158, Cl. D23-238.000.
Empak, Inc.: See—
Jacoby, Robert; and Gregerson, Barry, 387,903, Cl. D3-273.000.
Enslen, Douglas L. Radius wall framing bracket. 387,970, Cl. D8-349.000.
Eriksson, Thomas, to Rehband Anatomiska AB. Ankle bandage. 388,173, Cl. D24-192.000.
Euroitalia S.r.l.: See—
Dinand, Pierre, 387,990, Cl. D9-519.000.
Fago, Frank M.; and Poland, Brian J., to Liebel-Flarsheim Company. Actuator for foot-operated control system. 388,056, Cl. D13-167.000.
Farbman, Jon. Hat. 387,888, Cl. D2-869.000.
Farbman, Jon. Visor. 387,889, Cl. D2-872.000.
Faulconer, Mark; and Bowman, Tim. Shoe sole. 387,890, Cl. D2-953.000.
Featherlite Mfg., Inc.: See—
Clement, Conrad Dean, 388,024, Cl. D12-97.000.
Fee Tat Holdings (H.K.) Limited: See—
Wan, Yiu Kwong, 388,203, Cl. D26-38.000.
Feinbloom, Richard E., to Designs for Vision, Inc. Combined eyeglasses and mounted headlight. 388,113, Cl. D16-309.000.
Fekete, Guy, to Roussel Uclaf. Instrument for implantations for manual use. 388,171, Cl. D24-133.000.
Ferland, Albert J.: See—
Bayer, William; Ferland, Albert J.; Klock, Paul; Maruska, Joshua; and Thornton, James B., 388,075, Cl. D14-116.000.
Ferro, Beatriz. Head band with optical lenses. 388,114, Cl. D16-309.000.
Figur, Bernd: See—
Stützer, Franz Alban; and Figur, Bernd, 387,908, Cl. D4-101.000.
Fila U.S.A., Inc.: See—
Crowley, Kevin J., 387,894, Cl. D2-972.000.
Fildan, Gerhard. Hanger for swim suits, brassieres and lingerie. 387,912, Cl. D6-326.000.
Fina Europe Societe Anonyne: See—
Toovey, Philip, 388,179, Cl. D25-56.000.
Fink, Roger F. Storage unit for compact disks, audio cassettes and the like. 387,943, Cl. D6-630.000.
Fitten, Timothy E.; Lay, Dieter F.; and Bender, Thomas M., to Redmond Products, Inc. Combined bottle, dispensing closure and travel cap. 387,988, Cl. D9-504.000.
Fogg, Peter M., to Nike, Inc. Element of a shoe upper. 387,885, Cl. D2-972.000.
Folkes, Donovan M.: See—
Diamantis, Perry W.; Folkes, Donovan M.; McCay, James Edward; and Messina, Sebastian J., Jr., 388,085, Cl. D14-149.000.
Diamantis, Perry W.; Folkes, Donovan M.; McCay, James Edward; and Messina, Sebastian J., Jr., 388,087, Cl. D14-151.000.
Forti, Mark; and Forti, William B. Flying gyroscope design. 388,133, Cl. D21-82.000.
Forti, William B.: See—

Forti, Mark; and Forti, William B., 388,133, Cl. D21-82.000.
Fouke, Herbert A.: See—
Brohard, Bonnie J.; Fouke, Herbert A.; and Koloski, Peter A., 388,212, Cl. D26-71.000.
Frengley, Andrew James, to Garwood Communications Limited. Pair of ear pieces. 388,093, Cl. D14-223.000.
Friedrich Grohe Aktiengesellschaft: See—
Gottwald, Adolf; and Lobermeier, Hans, 388,155, Cl. D23-238.000.
Fuji Kogyo Co., Ltd.: See—
Ohmura, Ryuichi, 388,152, Cl. D22-142.000.
Gagnon, Hubert; and Balatti, Aldo. Fork. 387,956, Cl. D7-653.000.
Game Time, Inc.: See—
Sutton, Wesley D.; Norquist, Thomas R.; and Henry, Brian, 388,148, Cl. D21-244.000.
Garwood Communications Limited: See—
Frengley, Andrew James, 388,093, Cl. D14-223.000.
Genovese, Alan A. Vending cart. 388,023, Cl. D12-1.000.
Giakonoski, Vasil. Eyeglasses. 388,112, Cl. D16-306.000.
Giosa, Tony. Memorial frame. 388,226, Cl. D99-17.000.
Glesser, Louis S., to Spyderco, Inc. S shaped throwing knife. 388,150, Cl. D22-118.000.
Global Upholstery Company: See—
Tedesco, Romeo; and Beaulieu, Jocelyn, 387,917, Cl. D6-366.000.
Gomez, Victor J. Notes holder. 388,121, Cl. D19-90.000.
Gomoll, James N.: See—
Hayes, Thomas J.; Sagan, Michael J. A.; Gomoll, James N.; and Spencer, Mark, 387,986, Cl. D9-435.000.
Goodyear Tire & Rubber Company, The: See—
Bonko, Mark Leonard, 388,032, Cl. D12-146.000.
Heinen, Richard; Harpes, Pierre; Klepper, Alain Alphonse Zelie Samuel; and Croissant, Bernard, 388,035, Cl. D12-147.000.
Labbe, Christian; and Lardo, Claude, 388,036, Cl. D12-147.000.
Le, Phuoc Thuan; and Collette, Jacques, 388,034, Cl. D12-146.000.
Loeffler, Ronald Lawrence; Young, Deborah Lynn; and Schuster, Daniel Edward, 388,031, Cl. D12-143.000.
Ratliff, Billy Joe, Jr., 388,028, Cl. D12-136.000.
Ratliff, Billy Joe, Jr., 388,029, Cl. D12-136.000.
Ratliff, Billy Joe, Jr., 388,038, Cl. D12-147.000.
Ratliff, Billy Joe, Jr., 388,039, Cl. D12-147.000.
Rohweder, Efimia Ellen; Miller, Frederick William; Kolowski, Michael Alois; Brown, Stephanie Carol; and Maxwell, Paul Bryan, 388,037, Cl. D12-147.000.
Scheuren, Daniel; Cazin-Bourguignon, Jean Francois; Robert, Michel Pierre Charles; and de Barsy, Olivier, 388,033, Cl. D12-146.000.
Schuster, Daniel Edward, 388,030, Cl. D12-142.000.
de Barsy, Olivier, 388,040, Cl. D12-147.000.
Goss, Lorane, to Mikron Industries, Inc. Window component extrusion. 388,186, Cl. D25-124.000.
Goss, Lorane, to Mikron Industries, Inc. Window component extrusion. 388,187, Cl. D25-124.000.
Goss, Lorane, to Mikron Industries, Inc. Window component extrusion. 388,188, Cl. D25-124.000.
Goss, Lorane, to Mikron Industries, Inc. Window component extrusion. 388,189, Cl. D25-124.000.
Goss, Lorane, to Mikron Industries, Inc. Window component extrusion. 388,190, Cl. D25-124.000.
Gotou, Masato; Miyake, Takanori; and Tanaka, Makoto, to Mitsubishi Denki Kabushiki Kaisha. Electrical discharge machine. 388,103, Cl. D15-127.000.
Gottwald, Adolf; and Lobermeier, Hans, to Friedrich Grohe Aktiengesellschaft. Bathtub faucet. 388,155, Cl. D23-238.000.
Gregerson, Barry: See—
Jacoby, Robert; and Gregerson, Barry, 387,903, Cl. D3-273.000.
Grossman, M. Gary; Meisner, Edward H.; Ballone, Michael P.; and Kiely, John E., to Regent Lighting Corporation. Work light fixture. 388,209, Cl. D26-63.000.
Gustafson, Kathryn: See—
Ritchie, Ian; Gustafson, Kathryn; and Bardsley, Henry, 388,192, Cl. D25-127.000.
Guthan, Donald Charles, Jr.: See—
Lee, Craig Allen; and Guthan, Donald Charles, Jr., 388,091, Cl. D14-191.000.
Hall, Peter: See—
Snitzer, Susan; and Hall, Peter, 387,980, Cl. D9-415.000.
Halstead, Whitfield G.; and Madden, Henry, to Wireless Access. Pager. 388,059, Cl. D14-191.000.
Hamamoto, Kouya; Tokizaki, Hiroshi; and Kuramochi, Izumi, to Yokohama Rubber Co., Ltd., The. Automobile tire. 388,058, Cl. D12-147.000.
Haney, Gerome A.: See—
Laituri, David; and Haney, Gerome A., 388,074, Cl. D14-115.000.
Hannah, Marcia G.; Noone, Michael J.; Stahl, Kermit E.; Mehrer, George W.; and Quaranta, Joseph, to CertainTeed Corporation. Shingle. 388,195, Cl. D25-139.000.
Hara, Toshio: See—
Tanaka, Yosuke; Uemura, Shigehiro; Hara, Toshio; and Takada, Kazuo, 388,060, Cl. D13-103.000.
Harada Industry Co., Ltd.: See—
Harada, Jiro, 388,101, Cl. D14-234.000.
Yamakawa, Katsuhiko; and Uchino, Shigeru, 388,096, Cl. D14-230.000.
Yamakawa, Katsuhiko; and Uchino, Shigeru, 388,097, Cl. D14-230.000.
Yamakawa, Katsuhiko; and Uchino, Shigeru, 388,098, Cl. D14-230.000.
Yamakawa, Katsuhiko; and Uchino, Shigeru, 388,099, Cl. D14-230.000.
Harada, Jiro, to Harada Industry Co., Ltd. Antenna element. 388,101, Cl. D14-234.000.
Harada, Keiichi; Himeda, Noriko; Kasai, Chikara; and Mikuriya, Hitoshi, to Matsushita Electric Industrial Co., Ltd. Battery. 388,051, Cl. D13-103.000.
Harker Creek Products, LLC: See—
Wisler, Glade A., 387,935, Cl. D6-598.000.
Harpes, Pierre: See—
Heinen, Richard; Harpes, Pierre; Klepper, Alain Alphonse Zelie Samuel; and Croissant, Bernard, 388,035, Cl. D12-147.000.
Harris, Daryl R.; Williams, Daniel L.; and Mischenko, Nicholas, to Motorola, Inc. Portable telephone housing. 388,080, Cl. D14-138.000.
Harris, Daryl R.: See—
Lohrding, Bradley K.; Williams, Daniel L.; Nona, Christopher J.; and Harris, Daryl R., 388,081, Cl. D14-138.000.
Mischenko, Nicholas; Harris, Daryl R.; and Williams, Daniel L., 388,078, Cl. D14-138.000.
Harris, Don W. Combined sacrum and ilia support pad. 388,169, Cl. D24-133.000.
Hart, Virginia: See—
Tedesco, Vincent; and Hart, Virginia, 387,939, Cl. D6-610.000.
Hayes, Thomas J.; Sagan, Michael J. A.; Gomoll, James N.; and Spencer, Mark, to Tenneco Packaging. Lid for a food container. 387,986, Cl. D9-435.000.
Hazen, Timothy Myron: See—
Taylor, Rodney Sherwood; Collins, Bobby Alton; Hazen, Timothy Myron; and Joiner, Walter Charles, 388,048, Cl. D12-328.000.
Heinen, Richard; Harpes, Pierre; Klepper, Alain Alphonse Zelie Samuel; and Croissant, Bernard, to Goodyear Tire & Rubber Company, The. Tire tread. 388,035, Cl. D12-147.000.
Heinz, Carl Aug, to Heinz Glashuttenwerke GmbH & Co. KG. Sidewall for a bottle. 387,994, Cl. D9-545.000.
Heinz Glashuttenwerke GmbH & Co. KG: See—
Heinz, Carl Aug, 387,994, Cl. D9-545.000.
Henderson, James A. Remote control transmitter for turning on wild game feeders. 388,005, Cl. D10-104.000.
Henning, Michael Scott: See—
Tokiyama, Masaru; Blatt, David Isaac; Beasley, Jeff Robert; and Henning, Michael Scott, 388,094, Cl. D14-226.000.
Henredon Furniture Industries, Inc.: See—
Rosebrock, Paul A., 387,924, Cl. D6-436.000.
Henrici, Christoph: See—
Tomforde, Johann; Manske, Jens; and Henrici, Christoph, 388,200, Cl. D26-28.000.
Henry, Brian: See—
Sutton, Wesley D.; Norquist, Thomas R.; and Henry, Brian, 388,148, Cl. D21-244.000.
Hernandez, Santo. Take up reel for venetian blind cords. 387,972, Cl. D6-359.000.
Hill, Loran R.; and Spangler, Anthony G., to Masco Corporation of Indiana. Faucet. 388,156, Cl. D23-238.000.
Himeda, Noriko: See—
Harada, Keiichi; Himeda, Noriko; Kasai, Chikara; and Mikuriya, Hitoshi, 388,051, Cl. D13-103.000.
Hippen, Jan, to Black & Decker Inc. Coffeemaker housing. 387,944, Cl. D7-309.000.
Hippen, Jan, to Black & Decker Inc. Coffeemaker housing. 387,945, Cl. D7-309.000.
Hippen, Jan, to Black & Decker Inc. Coffeemaker. 387,946, Cl. D7-309.000.
Holmes Products Corp: See—
Lo, David, 388,221, Cl. D26-102.000.
Holmes Products Corp.: See—
Cunning, Joseph M., 388,163, Cl. D23-370.000.
Holophane Corporation: See—
Brohard, Bonnie J.; Fouke, Herbert A.; and Koloski, Peter A., 388,212, Cl. D26-71.000.
Horn, Jens, to Spyderco, Inc. Folding knife. 387,966, Cl. D8-99.000.
Houplain, Herve, to Impex Handelsgesellschaft Mbh (F.E.) Ltd. Torch. 388,207, Cl. D26-48.000.
Hoyt, Earl, to After Shave Products, Inc. Combined bottle and cap. 387,995, Cl. D9-566.000.
Hsu, Keen, to Bright Yin Huey Co., Ltd. Ceiling lamp. 388,215, Cl. D26-85.000.
Hsu, Keen, to Bright Yin Huey Co., Ltd. Ceiling lamp. 388,216, Cl. D26-85.000.
Hsu, Keen, to Bright Yin Huey Co., Ltd. Ceiling lamp. 388,217, Cl. D26-85.000.
Hsu, Keen, to Bright Yin Huey Co., Ltd. Wall mounted lamp. 388,218, Cl. D26-87.000.
Hsu, Keen, to Bright Yin Huey Co., Ltd. Wall mounted lamp. 388,219, Cl. D26-87.000.
Hsu, Keen, to Bright Yin Huey Co., Ltd. Wall mounted lamp. 388,220, Cl. D26-87.000.
Huan-Chiang, Tseng. Golf club head. 388,143, Cl. D21-219.000.
Huang, Frank Teh-Hsiung. Vacuum flask. 387,951, Cl. D7-319.000.
Huckins, Terry D. Combined camera and mount system for a vehicle. 388,107, Cl. D16-208.000.
Hung, Joseph Chan Ka, to Vtech Communications Ltd. Telephone base set housing. 388,084, Cl. D14-149.000.
Hunt, Thomas A., to Spectrum Concepts, Inc. Shelf mountable rotatable organizer. 387,928, Cl. D6-511.000.

Ichijima, Mikiro: *See—*
Komamiya, Yuko; Ichijima, Mikiro; and Iizuka, Toshiro, 388,089, Cl. D14-191.000.
IDT International Limited: *See—*
Chan, Raymond, 387,996, Cl. D10-18.000.
Iida, Koichi, to Sharp Kabushiki Kaisha. Video projector. 388,111, Cl. D16-231.000.
Iizuka, Toshiro: *See—*
Komamiya, Yuko; Ichijima, Mikiro; and Iizuka, Toshiro, 388,089, Cl. D14-191.000.
Impex Handelsgesellschaft Mbh (F.E.) Ltd.: *See—*
Houplain, Herve, 388,207, Cl. D26-48.000.
Impex, SA: *See—*
Marguerie, Patrick, 388,233, Cl. D99-34.000.
Innova Champion Discs, Inc.: *See—*
Dunipace, David Bruce, 388,134, Cl. D21-86.000.
InterBold: *See—*
Magee, Paul D.; Delaney, Dan J.; Liesner, Kevin R.; Wetrich, Brian S.; Kerstetter, Tim E.; and Davis, John C., 388,231, Cl. D99-28.000.
Interlego AG: *See—*
Nielsen, Helle Kleist, 388,141, Cl. D21-150.000.
Nielsen, Jacob; Bjørnskov-Bartholdy, Lone; and Nielsen, Per Steen, 388,140, Cl. D21-148.000.
Nielsen, Robert, 388,139, Cl. D21-148.000.
Rasmussen, Kenn; and Øhrwald, Niels, 388,137, Cl. D21-108.000.
International Business Machines Corporation: *See—*
Desiano, Frank Michael; Jackson, Mark William; Muenkel, Gerard Francis; and Smalley, Douglas Alexander, 388,062, Cl. D14-102.000.
Mieki, Nariaki; and Yamazaki, Kazuhiko, 388,057, Cl. D14-114.000.
Ishihara, Tomiaki, to Kabushiki Kaisha Toshiba. IC module. 388,066, Cl. D14-114.000.
Israel, Eli; and Israel, Gabriel. Holder for a shaving tool. 387,930, Cl. D6-526.000.
Israel, Gabriel: *See—*
Israel, Eli; and Israel, Gabriel, 387,930, Cl. D6-526.000.
Itzkowitz, Israel, to Ambar Diamonds Inc. Combined gemstone and setting. 388,015, Cl. D11-90.000.
Izumi Products Company: *See—*
Yasui, Tadashi; and Yamaichi, Kiyoko, 387,961, Cl. D8-68.000.
Jackson, Mark William: *See—*
Desiano, Frank Michael; Jackson, Mark William; Muenkel, Gerard Francis; and Smalley, Douglas Alexander, 388,062, Cl. D14-102.000.
Jacoby, Robert; and Gregerson, Barry, to Empak, Inc. Shipping container. 387,903, Cl. D3-273.000.
Jaggi, Cindy R.: *See—*
Smiley, Charles F.; and Jaggi, Cindy R., 387,974, Cl. D8-378.000.
Japan Storage Battery Co., Ltd.: *See—*
Yasui, Tadashi; and Yamaichi, Kiyoko, 387,961, Cl. D8-68.000.
Jarrell, Robert B., to Mikron Industries, Inc. Window component extrusion. 388,191, Cl. D25-124.000.
Jensen, Paula J. Combined vehicle safety-belt buckle cover and a tongue plate housing cover. 387,887, Cl. D2-639.000.
Jesman, Andrew; and Jesman, Christopher. Radio antenna. 388,100, Cl. D14-234.000.
Jesman, Christopher: *See—*
Jesman, Andrew; and Jesman, Christopher, 388,100, Cl. D14-234.000.
Johnson, Aaron M., to National Industries, Inc. Ceiling fan blade iron. 388,165, Cl. D23-411.000.
Joiner, Walter Charles: *See—*
Taylor, Rodney Sherwood; Collins, Bobby Alton; Hazen, Timothy Myron; and Joiner, Walter Charles, 388,048, Cl. D12-328.000.
Joshua, Jane, II, to Word of Faith Christian Center Church. Paper currency holder. 388,234, Cl. D99-34.000.
Juteau, Patrick, to Tefal S.A. Electronic personal weighing scales. 388,004, Cl. D10-92.000.
K.K.U. Ltd.: *See—*
Sung, Eric, 387,960, Cl. D8-61.000.
Kabushiki Kaisha Hattori Seiko: *See—*
Molineri, Giuliano, 388,000, Cl. D10-30.000.
Kabushiki Kaisha Pilot: *See—*
Kuramoto, Michiaki, 388,119, Cl. D19-51.000.
Kabushiki Kaisha Toshiba: *See—*
Ishihara, Tomiaki, 388,066, Cl. D14-114.000.
Yoneyama, Takahisa, 388,102, Cl. D14-241.000.
Kaiser, David W.: *See—*
Carbone, Richard J.; and Kaiser, David W., 388,206, Cl. D26-43.000.
Källgren, Eva, to Astra Aktiebolag. Blister pack. 387,977, Cl. D9-348.000.
Kaplan, Michael, to Rocket Jewelry Box, Inc. Watch box. 387,982, Cl. D9-423.000.
Karl, David H.: *See—*
Robertson, William H., Jr.; Musil, Scott F.; Peebles, Douglas D.; and Karl, David H., 388,053, Cl. D13-133.000.
Kasai, Chikara: *See—*
Harada, Keiichi; Himeda, Noriko; Kasai, Chikara; and Mikuriya, Hitoshi, 388,051, Cl. D13-103.000.
Kaufman, Kirina S.: *See—*
Littman, Sandra E.; and Kaufman, Kirina S., 388,213, Cl. D26-85.000.
Kawauchi, Masahiko; Sato, Tadamitsu; Petermann, J. Scott; and Abed, Tark, to Alps Electric (USA), Inc. Cursor control input device. 388,065, Cl. D14-114.000.
Keiper Recaro GmbH & Co.: *See—*
Beermann, Frank; Rager, Bernd; and Armbrecht, Dieter, 387,914, Cl. D6-356.000.
Kejejian, Toros, to Tycoon Jewelry, Inc. Nine gemstone pendant setting. 388,016, Cl. D11-91.000.
Kejejian, Toros, to Tycoon Jewelry, Inc. Four gemstone pendant setting. 388,017, Cl. D11-91.000.
Keller, H. Thomas; and Risdon, Scott, to Vaughan Furniture Company. Headboard and footboard set for a bed. 387,919, Cl. D6-393.000.
Keller, H. Thomas; and Risdon, Scott, to Vaughan Furniture Company, Inc. Combined dresser, gallery box and mirror. 387,925, Cl. D6-438.000.
Keller, Karen Sue: *See—*
Keller, Steven Frederick; and Keller, Karen Sue, 387,957, Cl. D7-691.000.
Keller, Steven Frederick; and Keller, Karen Sue, 387,958, Cl. D7-691.000.
Keller, Steven Frederick; and Keller, Karen Sue. Animal dry food scoop. 387,957, Cl. D7-691.000.
Keller, Steven Frederick; and Keller, Karen Sue. Animal dry food scoop. 387,958, Cl. D7-691.000.
Kernen, Kevin G.: *See—*
Yorke, Chris G.; and Kernen, Kevin G., 387,897, Cl. D3-215.000.
Kerstetter, Tim E.: *See—*
Magee, Paul D.; Delaney, Dan J.; Liesner, Kevin R.; Wetrich, Brian S.; Kerstetter, Tim E.; and Davis, John C., 388,231, Cl. D99-28.000.
Khoo, Bee Lay, to Motorola, Inc. Selective call receiver. 388,090, Cl. D14-191.000.
Kiely, John E.: *See—*
Grossman, M. Gary; Meisner, Edward H.; Ballone, Michael P.; and Kiely, John E., 388,209, Cl. D26-63.000.
Kim, Gi-Soo, to Daewoo Telecom Ltd. Portable computer. 388,063, Cl. D14-106.000.
Kimura, Hiroyuki; and Matsumoto, Toshio, to Canon Kabushiki Kaisha. Single lens reflex camera. 388,109, Cl. D16-217.000.
King, Charlene, to Medias & Company. Computer mousing platform. 388,064, Cl. D14-114.000.
KKH Corp.: *See—*
Bear, Hillard, 387,934, Cl. D6-598.000.
Klepper, Alain Alphonse Zelie Samuel: *See—*
Heinen, Richard; Harpes, Pierre; Klepper, Alain Alphonse Zelie Samuel; and Croissant, Bernard, 388,035, Cl. D12-147.000.
Klock, Paul: *See—*
Bayer, William; Ferland, Albert J.; Klock, Paul; Maruska, Joshua; and Thornton, James B., 388,075, Cl. D14-116.000.
Kloss, Charles W. Camera with alarm. 388,108, Cl. D16-208.000.
Knight, Kimberly R.; and Sami, Mehrad. Humorous novelty item. 388,147, Cl. D21-240.000.
Koloski, Peter A.: *See—*
Brohard, Bonnie J.; Fouke, Herbert A.; and Koloski, Peter A., 388,212, Cl. D26-71.000.
Kolowski, Michael Alois: *See—*
Rohweder, Efimia Ellen; Miller, Frederick William; Kolowski, Michael Alois; Brown, Stephanie Carol; and Maxwell, Paul Bryan, 388,037, Cl. D12-147.000.
Kolvin Industries Limited: *See—*
Lie, Sen-Nen, 388,175, Cl. D24-215.000.
Komamiya, Yuko; Ichijima, Mikiro; and Iizuka, Toshiro, to Matsushita Electric Industrial Co., Ltd. Pager. 388,089, Cl. D14-191.000.
Koski, Arnold. Signaling flashing strobe light. 388,007, Cl. D10-114.000.
Kotoucek, Randolf C., to Kranson Industries, Inc. Bottle body with beveled end. 387,992, Cl. D9-521.000.
Koumi, Afram. Jewelry pendant. 388,014, Cl. D11-83.000.
Kranson Industries, Inc.: *See—*
Kotoucek, Randolf C., 387,992, Cl. D9-521.000.
Kubicki, Timothy A.: *See—*
Lohrding, Bradley K.; Williams, Daniel L.; and Kubicki, Timothy A., 388,079, Cl. D14-138.000.
Kumagai, Yoshiaki: *See—*
Niijima, Makoto; and Kumagai, Yoshiaki, 388,095, Cl. D14-230.000.
Kuramochi, Izumi: *See—*
Hamamoto, Kouya; Tokizaki, Hiroshi; and Kuramochi, Izumi, 388,058, Cl. D12-147.000.
Kuramoto, Michiaki, to Kabushiki Kaisha Pilot. Pen for correction liquid or regular ink. 388,119, Cl. D19-51.000.
L. Powell Co., Inc.: *See—*
Powell, Lawrence, 387,920, Cl. D6-397.000.
Labbe, Christian; and Lardo, Claude, to Goodyear Tire & Rubber Company, The. Tire head. 388,036, Cl. D12-147.000.
Laguera Garza, Marcelo Garza, to Procesadora de Ceramica de Mexico, S.A. DE C. V. Bidet. 388,159, Cl. D23-295.000.
Laituri, David; and Haney, Gerome A., to StreamLogic Corporation. Facade panel arrangement for a disk drive chassis. 388,074, Cl. D14-115.000.
Lampel, Michael Carl. Three dimensional chess board. 388,129, Cl. D21-23.000.
Landscape Forms, Inc.: *See—*
Yurk, Arno Roland, 387,913, Cl. D6-337.000.
Langner, F. Richard. Mechanical trigger lock. 388,149, Cl. D22-108.000.
Lanoie, Louis A., to Phenix Group, Inc. Package for writing instruments. 387,983, Cl. D9-424.000.
Lanoix, Réal; Doyon, Jean-Christophe; Collin, Gilles; and Bourgeois, Daniel, to Ritvik Group Group Inc., The. Reversible race track section. 388,138, Cl. D21-143.000.

Lardo, Claude: *See—*
Labbe, Christian; and Lardo, Claude, 388,036, Cl. D12-147.000.
Lay, Dieter F.: *See—*
Fitten, Timothy E.; Lay, Dieter F.; and Bender, Thomas M., 387,988, Cl. D9-504.000.
Layman, Charles H. Outdoor shower door slider. 387,973, Cl. D8-377.000.
Le, Phuoc Thuan; and Collette, Jacques, to Goodyear Tire & Rubber Company, The. Tire tread. 388,034, Cl. D12-146.000.
Lecocq, Francis; and Moussaud, Jean-Pierre, to Meccano, S.A. Construction toy element. 388,136, Cl. D21-108.000.
Lee, Charles. Three wheel roller skate. 388,145, Cl. D21-226.000.
Lee, Craig Allen; and Guthan, Donald Charles, Jr., to Motorola, Inc. Combined display and button for portable communication receiver. 388,091, Cl. D14-191.000.
Leonard, Grace. Decorative connector between an earring and a hair appliance. 388,011, Cl. D11-40.000.
Leverrier, Bruno, to Moulinex S.A. Blender. 387,948, Cl. D7-378.000.
Libman Company, The: *See—*
Berti, Enzo, 387,910, Cl. D4-199.000.
Lie, Sen-Nen, to Kolvin Industries Limited. Massager. 388,175, Cl. D24-215.000.
Liebel-Flarsheim Company: *See—*
Fago, Frank M.; and Poland, Brian J., 388,056, Cl. D13-167.000.
Liesner, Kevin R.: *See—*
Magee, Paul D.; Delaney, Dan J.; Liesner, Kevin R.; Wetrich, Brian S.; Kerstetter, Tim E.; and Davis, John C., 388,231, Cl. D99-28.000.
Little Tikes Company, The: *See—*
Maxwell, Matthew C.; and Walter, Christopher G., 388,132, Cl. D21-78.000.
Littman, Sandra E.; and Kaufman, Kirina S., to Sandy Littman, Inc. Lighting fixture. 388,213, Cl. D26-85.000.
Lo, David, to Holmes Products Corp. Floor lamp. 388,221, Cl. D26-102.000.
Lo, Jose T.: *See—*
Nagele, Albert L.; Soren, Leonid; Palmer, James D.; and Lo, Jose T., 388,082, Cl. D14-138.000.
Lobermeier, Hans: *See—*
Gottwald, Adolf; and Lobermeier, Hans, 388,155, Cl. D23-238.000.
Lodge, Daniel A., to Q.I.S., Inc. Chromatography vial. 388,176, Cl. D24-224.000.
Loeffler, Ronald Lawrence; Young, Deborah Lynn; and Schuster, Daniel Edward, to Goodyear Tire & Rubber Company, The. Tire tread. 388,031, Cl. D12-143.000.
Lohrding, Bradley K.; Williams, Daniel L.; and Kubicki, Timothy A., to Motorola, Inc. Telephone housing. 388,079, Cl. D14-138.000.
Lohrding, Bradley K.; Williams, Daniel L.; Nona, Christopher J.; and Harris, Daryl R., to Motorola, Inc. Portable radiotelephone. 388,081, Cl. D14-138.000.
Longan, John: *See—*
Chiu, Bernard; Wang, Jui-Shang; Longan, John; Marvin, Robert L., Jr.; and O'Grady, Richard M., 388,162, Cl. D23-356.000.
Lu, Ching Feng. Ceiling fan housing. 388,166, Cl. D23-411.000.
Lucas, Robert J., to Nike, Inc. Bottom profile of a shoe outsole. 387,938, Cl. D2-951.000.
Lucent Technologies Inc.: *See—*
Diamantis, Perry W.; Folkes, Donovan M.; McCay, James Edward; and Messina, Sebastian J., Jr., 388,085, Cl. D14-149.000.
Diamantis, Perry W.; Folkes, Donovan M.; McCay, James Edward; and Messina, Sebastian J., Jr., 388,087, Cl. D14-151.000.
Luciani, Jean-Michel: *See—*
Benchetrit, Michel; Boukobza, Thierry; and Luciani, Jean-Michel, 388,135, Cl. D21-95.000.
Lukasiewicz, Robert. Golf club head. 388,144, Cl. D21-220.000.
Lundbäck, Hans Olof, to Teracom Components AB. Grounding component for electric cables. 388,052, Cl. D13-133.000.
Lynch, Steven K.: *See—*
Schafernak, Dale Edward; Lynch, Steven K.; and Pittman, Raymond H., 388,196, Cl. D25-150.000.
Madden, Henry: *See—*
Halstead, Whitfield G.; and Madden, Henry, 388,059, Cl. D14-191.000.
Magee, Paul D.; Delaney, Dan J.; Liesner, Kevin R.; Wetrich, Brian S.; Kerstetter, Tim E.; and Davis, John C., to InterBold. Automated banking machine. 388,231, Cl. D99-28.000.
Magister, Francis Michael, to Victorian Gift Box, Inc. Ornamental octagonal box. 387,984, Cl. D9-430.000.
Maier, Hans-Joachim, to Mercedes-Benz AG. Front face of a wheel cover. 388,044, Cl. D12-204.000.
Manik Motors, Inc.: *See—*
Thorne, Nicholas; and Meakin, Marcus, 388,042, Cl. D12-171.000.
Manske, Jens: *See—*
Tomforde, Johann; Manske, Jens; and Henrici, Christoph, 388,200, Cl. D26-28.000.
Marguerie, Patrick, to Impex, SA. Holder for coins. 388,233, Cl. D99-34.000.
Mariotta, Marco, to Agie, A.G. für Industrielle Elektronik. Control console for man-operated machine having tiltable display. 388,055, Cl. D13-163.000.
Mark, Darren M.: *See—*
Doughty, Frederic C.; and Mark, Darren M., 388,158, Cl. D23-238.000.
Maruska, Joshua: *See—*
Bayer, William; Ferland, Albert J.; Klock, Paul; Maruska, Joshua; and Thornton, James B., 388,075, Cl. D14-116.000.
Marvin, Robert L., Jr.: *See—*
Chiu, Bernard; Wang, Jui-Shang; Longan, John; Marvin, Robert L., Jr.; and O'Grady, Richard M., 388,162, Cl. D23-356.000.
Masco Corporation of Indiana: *See—*
Hill, Loran R.; and Spangler, Anthony G., 388,156, Cl. D23-238.000.
Masonite Corporation: *See—*
Schafernak, Dale Edward; Lynch, Steven K.; and Pittman, Raymond H., 388,196, Cl. D25-150.000.
Matsumoto, Toshio: *See—*
Kimura, Hiroyuki; and Matsumoto, Toshio, 388,109, Cl. D16-217.000.
Matsushita Electric Industrial Co., Ltd.: *See—*
Harada, Keiichi; Himeda, Noriko; Kasai, Chikara; and Mikuriya, Hitoshi, 388,051, Cl. D13-103.000.
Komamiya, Yuko; Ichijima, Mikiro; and Iizuka, Toshiro, 388,089, Cl. D14-191.000.
Mattson, Janet. Nail polish bottle. 387,909, Cl. D4-116.000.
Matye, Randy P. Earring. 388,012, Cl. D11-44.000.
Maxwell, Matthew C.; and Walter, Christopher G., to Little Tikes Company, The. Toy vehicle. 388,132, Cl. D21-78.000.
Maxwell, Paul Bryan: *See—*
Rohweder, Efimia Ellen; Miller, Frederick William; Kolowski, Michael Alois; Brown, Stephanie Carol; and Maxwell, Paul Bryan, 388,037, Cl. D12-147.000.
Mayes, Peter Figaro: *See—*
Payton, David Michael; McDougall, Andrew Charles; and Mayes, Peter Figaro, 388,181, Cl. D25-121.000.
Payton, David Michael; McDougall, Andrew Charles; and Mayes, Peter Figaro, 388,183, Cl. D25-121.000.
MC Micro Compact Car Aktingesellschaft: *See—*
Tomforde, Johann; Manske, Jens; and Henrici, Christoph, 388,200, Cl. D26-28.000.
McCay, James Edward: *See—*
Diamantis, Perry W.; Folkes, Donovan M.; McCay, James Edward; and Messina, Sebastian J., Jr., 388,085, Cl. D14-149.000.
Diamantis, Perry W.; Folkes, Donovan M.; McCay, James Edward; and Messina, Sebastian J., Jr., 388,087, Cl. D14-151,000.
McDougall, Andrew Charles: *See—*
Payton, David Michael; McDougall, Andrew Charles; and Mayes, Peter Figaro, 388,181, Cl. D25-121.000.
Payton, David Michael; and McDougall, Andrew Charles, 388,182, Cl. D25-121.000.
Payton, David Michael; McDougall, Andrew Charles; and Mayes, Peter Figaro, 388,183, Cl. D25-121.000.
McEntee, Kathryn M., to Tucker Housewares. Craft box. 387,904, Cl. D3-273.000.
McGaw, Inc.: *See—*
Barney, Ward W.; McLonis, Mark R.; Smith, Steven L.; Wooldridge, Ernest L.; York, Walter A.; and Young, H. Theodore, 388,168, Cl. D24-118.000.
McKinney, Daniel. Cabinet with adjustable drawer. 387,923, Cl. D6-429.000.
McLonis, Mark R.: *See—*
Barney, Ward W.; McLonis, Mark R.; Smith, Steven L.; Wooldridge, Ernest L.; York, Walter A.; and Young, H. Theodore, 388,168, Cl. D24-118.000.
McNally, Phillip A., Jr. Tubing clamp for stainless steel. 387,978, Cl. D8-356.000.
Meakin, Marcus: *See—*
Thorne, Nicholas; and Meakin, Marcus, 388,042, Cl. D12-171.000.
Meccano, S.A.: *See—*
Lecocq, Francis; and Moussaud, Jean-Pierre, 388,136, Cl. D21-108.000.
Urvoy, Jean-Jacques, 387,964, Cl. D8-82.000.
Medias & Company: *See—*
King, Charlene, 388,064, Cl. D14-114.000.
Mehrer, George W.: *See—*
Hannah, Marcia G.; Noone, Michael J.; Stahl, Kermit E.; Mehrer, George W.; and Quaranta, Joseph, 388,195, Cl. D25-139.000.
Meikrantz, Edward T.: *See—*
Dragon, Paul D.; and Meikrantz, Edward T., 387,968, Cl. D8-107.000.
Meisner, Edward H.: *See—*
Grossman, M. Gary; Meisner, Edward H.; Ballone, Michael P.; and Kiely, John E., 388,209, Cl. D26-63.000.
Mercedes-Benz AG: *See—*
Maier, Hans-Joachim, 388,044, Cl. D12-204.000.
Pfeiffer, Peter; and Sacco, Bruno, 388,047, Cl. D12-211.000.
Messina, Sebastian J., Jr.: *See—*
Diamantis, Perry W.; Folkes, Donovan M.; McCay, James Edward; and Messina, Sebastian J., Jr., 388,085, Cl. D14-149.000.
Diamantis, Perry W.; Folkes, Donovan M.; McCay, James Edward; and Messina, Sebastian J., Jr., 388,087, Cl. D14-151.000.
Metal Container Corporation: *See—*
Neiner, Christopher G., 387,987, Cl. D9-438.000.
Mieki, Nariaki; and Yamazaki, Kazuhiko, to International Business Machines Corporation. Pair of mouse drag buttons. 388,057, Cl. D14-114.000.
Mikron Industries, Inc.: *See—*
Goss, Lorane, 388,186, Cl. D25-124.000.
Goss, Lorane, 388,187, Cl. D25-124.000.
Goss, Lorane, 388,188, Cl. D25-124.000.
Goss, Lorane, 388,189, Cl. D25-124.000.
Goss, Lorane, 388,190, Cl. D25-124.000.
Jarrell, Robert B., 388,191, Cl. D25-124.000.
Mikuriya, Hitoshi: *See—*

Harada, Keiichi; Himeda, Noriko; Kasai, Chikara; and Mikuriya, Hitoshi, 388,051, Cl. D13-103.000.
Miller, Frederick William: *See—*
Rohweder, Efimia Ellen; Miller, Frederick William; Kolowski, Michael Alois; Brown, Stephanie Carol; and Maxwell, Paul Bryan, 388,037, Cl. D12-147.000.
Miller, John W. Golf club head. 388,142, Cl. D21-214.000.
Minka Lighting, Inc.: *See—*
Pickett, Mark, 388,164, Cl. D23-377.000.
Miranda, Pasquale. Chandelier. 388,214, Cl. D26-[illegible]1.000.
Miranda, Pasquale. Chandelier arm. 388,223, Cl. D26-145.000.
Mischenko, Nicholas; Harris, Daryl R.; and Williams, Daniel L., to Motorola, Inc. Portable telephone housing. 388,078, Cl. D14-138.000.
Mischenko, Nicholas: *See—*
Harris, Daryl R.; Williams, Daniel L.; and Mischenko, Nicholas, 388,080, Cl. D14-138.000.
Mitsubishi Denki Kabushiki Kaisha: *See—*
Gotou, Masato; Miyake, Takanori; and Tanaka, Makoto, 388,103, Cl. D15-127.000.
Miyake, Takanori: *See—*
Gotou, Masato; Miyake, Takanori; and Tanaka, Makoto, 388,103, Cl. D15-127.000.
Moen Incorporated: *See—*
Bauer, Witold; and Sindelar, Mark, 388,157, Cl. D23-238.000.
Molineri, Giuliano, to Kabushiki Kaisha Hattori Seiko. Watch case. 388,000, Cl. D10-30.000.
Mori, Takanori. Case for a disk-type recording medium. 387,976, Cl. D9-346.000.
Mosior, Donald J.; Ponsi, Lawrence G.; and O'Daniel, John, to Sage Products, Inc. Glove dispenser. 387,981, Cl. D9-418.000.
Motorola, Inc.: *See—*
Harris, Daryl R.; Williams, Daniel L.; and Mischenko, Nicholas, 388,080, Cl. D14-138.000.
Khoo, Bee Lay, 388,090, Cl. D14-191.000.
Lee, Craig Allen; and Guthan, Donald Charles, Jr., 388,091, Cl. D14-191.000.
Lohrding, Bradley K.; Williams, Daniel L.; and Kubicki, Timothy A., 388,079, Cl. D14-138.000.
Lohrding, Bradley K.; Williams, Daniel L.; Nona, Christopher J.; and Harris, Daryl R., 388,081, Cl. D14-138.000.
Mischenko, Nicholas; Harris, Daryl R.; and Williams, Daniel L., 388,078, Cl. D14-138.000.
Nagele, Albert L.; Soren, Leonid; Palmer, James D.; and Lo, Jose T., 388,082, Cl. D14-138.000.
Robertson, William H., Jr.; Musil, Scott F.; Peebles, Douglas D.; and Karl, David H., 388,053, Cl. D13-133.000.
Tokiyama, Masaru; Blatt, David Isaac; Beasley, Jeff Robert; and Henning, Michael Scott, 388,094, Cl. D14-226.000.
Moulinex S.A.: *See—*
Leverrier, Bruno, 387,948, Cl. D7-378.000.
Mount Isa Mines Limited: *See—*
Villaescusa, Ernesto, 388,193, Cl. D25-133.000.
Moussaud, Jean-Pierre: *See—*
Lecocq, Francis; and Moussaud, Jean-Pierre, 388,136, Cl. D21-108.000.
Muenkel, Gerard Francis: *See—*
Desiano, Frank Michael; Jackson, Mark William; Muenkel, Gerard Francis; and Smalley, Douglas Alexander, 388,062, Cl. D14-102.000.
Muñagorri Enriquez, José María: *See—*
Canton Gongora, Antonio; Cruz Fernandez, Carlos Jesús; Muñagorri Enriquez, José María; and Rayo Ortigüela, Juan Carlos, 387,927, Cl. D6-495.000.
Munoz, Josue A. Bicycle spoke attachable light. 388,199, Cl. D26-28.000.
Murray, Paul C. Hunter's blind. 388,177, Cl. D25-16.000.
Musil, Scott F.: *See—*
Robertson, William H., Jr.; Musil, Scott F.; Peebles, Douglas D.; and Karl, David H., 388,053, Cl. D13-133.000.
Nagele, Albert L.; Soren, Leonid; Palmer, James D.; and Lo, Jose T., to Motorola, Inc. Faceplate for a cordless portable telephone. 388,082, Cl. D14-138.000.
National Industries, Inc.: *See—*
Johnson, Aaron M., 388,165, Cl. D23-411.000.
NCR Corporation: *See—*
Quinn, Bruce A., 388,230, Cl. D99-28.000.
Neiner, Christopher G., to Metal Container Corporation. End closure for a container. 387,987, Cl. D9-438.000.
Nemeckay, Stephen A., to Dexter Automatic Products Company. Combined housing and securing device. 387,971, Cl. D8-354.000.
Nichols, Ron, to Catalina Lighting, Inc. Lamp base with clock. 388,208, Cl. D26-54.000.
Nicodemus, Carol A. Disposable place mat. 387,941, Cl. D6-616.000.
Nielsen, Helle Kleist, to Interlego AG. Toy animal. 388,141, Cl. D21-150.000.
Nielsen, Jacob; Bjørnskov-Bartholdy, Lone; and Nielsen, Per Steen, to Interlego AG. Toy animal. 388,140, Cl. D21-148.000.
Nielsen, Per Steen: *See—*
Nielsen, Jacob; Bjørnskov-Bartholdy, Lone; and Nielsen, Per Steen, 388,140, Cl. D21-148.000.
Nielsen, Robert, to Interlego AG. Toy animal. 388,139, Cl. D21-148.000.
Niijima, Makoto; and Kumagai, Yoshiaki, to Sony Corporation. Media unit. 388,095, Cl. D14-230.000.
Nike, Inc.: *See—*
Cooper, Aaron Alexander Carroll, 387,895, Cl. D2-960.000.
Fogg, Peter M., 387,885, Cl. D2-972.000.
Lucas, Robert J., 387,938, Cl. D2-951.000.
Vestuti, Ricardo, 387,891, Cl. D2-959.000.
Nikon Corporation: *See—*
Ono, Arata; and Akabane, Jun, 388,104, Cl. D16-134.000.
Nilssen, Kenneth H.: *See—*
Workman, Bradley P.; and Nilssen, Kenneth H., 387,993, Cl. D9-542.000.
Nona, Christopher J.: *See—*
Lohrding, Bradley K.; Williams, Daniel L.; Nona, Christopher J.; and Harris, Daryl R., 388,081, Cl. D14-138.000.
Noone, Michael J.: *See—*
Hannah, Marcia G.; Noone, Michael J.; Stahl, Kermit E.; Mehrer, George W.; and Quaranta, Joseph, 388,195, Cl. D25-139.000.
Norquist, Thomas R.: *See—*
Sutton, Wesley D.; Norquist, Thomas R.; and Henry, Brian, 388,148, Cl. D21-244.000.
North Communication, Inc.: *See—*
Couch, Michael L., 388,229, Cl. D99-28.000.
Oba, Haruya, to Citizen Watch Co., Ltd. Watch. 388,204, Cl. D10-39.000.
O'Daniel, John: *See—*
Mosior, Donald J.; Ponsi, Lawrence G.; and O'Daniel, John, 387,981, Cl. D9-418.000.
Oetman, David A.: *See—*
Dormon, Nicholas Q.; and Oetman, David A., 387,922, Cl. D6-418.000.
O'Grady, Richard M.: *See—*
Chiu, Bernard; Wang, Jui-Shang; Longan, John; Marvin, Robert L., Jr.; and O'Grady, Richard M., 388,162, Cl. D23-356.000.
Ohmura, Ryuichi, to Fuji Kogyo Co., Ltd. Reel seat for fishing rod. 388,152, Cl. D22-142.000.
Øhrwald, Niels: *See—*
Rasmussen, Kenn; and Øhrwald, Niels, 388,137, Cl. D21-108.000.
Okonogi, Tatsuya: *See—*
Sukumoda, Katsuyuki; Okonogi, Tatsuya; and Yoshikawa, Yukio, 388,123, Cl. D20-10.000.
Okumura, Robert J. Fly strip. 387,899, Cl. D3-221.000.
Olympus Optical Co., Ltd.: *See—*
Watarai, Kazuhiko; and Tanio, Satoru, 388,110, Cl. D16-217.000.
Yamamoto, Kazuo, 388,105, Cl. D16-202.000.
Oneida, Ltd.: *See—*
Thompson, Stephen W., 387,955, Cl. D7-653.000.
Ono, Arata; and Akabane, Jun, to Nikon Corporation. Camera lens. 388,104, Cl. D16-134.000.
Palmer, James D.: *See—*
Nagele, Albert L.; Soren, Leonid; Palmer, James D.; and Lo, Jose T., 388,082, Cl. D14-138.000.
Panta, Hector Virgilio, to Pantalimentos, CIA. LTDA. Serving tray. 387,950, Cl. D7-551.000.
Pantalimentos, CIA. LTDA.: *See—*
Panta, Hector Virgilio, 387,950, Cl. D7-551.000.
Parfums Jean Jacques Vivier: *See—*
Chahed, Khaled, 387,989, Cl. D9-517.000.
Chahed, Khaled, 387,991, Cl. D9-519.000.
Payton, David Michael; McDougall, Andrew Charles; and Mayes, Peter Figaro, to Davandian Limited. Bar primarily intended for glazing. 388,181, Cl. D25-121.000.
Payton, David Michael; and McDougall, Andrew Charles, to Davandian Limited. Cover strip primarily intended for glazing. 388,182, Cl. D25-121.000.
Payton, David Michael; McDougall, Andrew Charles; and Mayes, Peter Figaro, to Davandian Limited. Bar primarily intended for glazing. 388,183, Cl. D25-121.000.
Peavey, Hartley D.: *See—*
Van Halen, Edward; Peavey, Hartley D.; and DeCola, Jim, 388,117, Cl. D17-20.000.
Peebles, Douglas D.: *See—*
Robertson, William H., Jr.; Musil, Scott F.; Peebles, Douglas D.; and Karl, David H., 388,053, Cl. D13-133.000.
Performance Marketing: *See—*
Diem, David W., 388,050, Cl. D12-419.000.
Pesa, William A., to Rubbermaid Incorporated. Water filter housing. 388,154, Cl. D23-209.000.
Petermann, J. Scott: *See—*
Kawauchi, Masahiko; Sato, Tadamitsu; Petermann, J. Scott; and Abed, Tark, 388,065, Cl. D14-114.000.
Petty, Diana May. Compartmented container. 387,906, Cl. D3-299.000.
Pfeiffer, Peter; and Sacco, Bruno, to Mercedes-Benz AG. Motor vehicle wheel front face. 388,047, Cl. D12-211.000.
PFT Enterprises, Inc.: *See—*
D'Agostino, Victor, 387,900, Cl. D3-221.000.
Phenix Group, Inc.: *See—*
Lanoie, Louis A., 387,983, Cl. D9-424.000.
Pickett, Mark, to Minka Lighting, Inc. Combined ceiling fan and light kit. 388,164, Cl. D23-377.000.
Pittman, Raymond H.: *See—*
Schafernak, Dale Edward; Lynch, Steven K.; and Pittman, Raymond H., 388,196, Cl. D25-150.000.
Polak, Antoinette M.: *See—*

Polak, John C.; Polak, Antoinette M.; Polak, M. Darlene; and Polak, M. Antoinette, 388,027, Cl. D12-129.000.
Polak, John C.; Polak, Antoinette M.; Polak, M. Darlene; and Polak, M. Antoinette. Antique sport vehicle stroller. 388,027, Cl. D12-129.000.
Polak, M. Antoinette: *See—*
Polak, John C.; Polak, Antoinette M.; Polak, M. Darlene; and Polak, M. Antoinette, 388,027, Cl. D12-129.000.
Polak, M. Darlene: *See—*
Polak, John C.; Polak, Antoinette M.; Polak, M. Darlene; and Polak, M. Antoinette, 388,027, Cl. D12-129.000.
Poland, Brian J.: *See—*
Fago, Frank M.; and Poland, Brian J., 388,056, Cl. D13-167.000.
Ponsi, Lawrence G.: *See—*
Mosior, Donald J.; Ponsi, Lawrence G.; and O'Daniel, John, 387,981, Cl. D9-418.000.
Powell, Lawrence, to L. Powell Co., Inc. Combined cheval mirror and concealed storage compartment for jewelry. 387,920, Cl. D6-397.000.
Powell, Mark, to Bayerische Motoren Werke Aktiengesellschaft. Suitcase. 387,905, Cl. D3-281.000.
Procesadora de Ceramica de Mexico, S.A. DE C. V.: *See—*
Laguera Garza, Marcelo Garza, 388,159, Cl. D23-295.000.
PSC, Inc.: *See—*
Bayer, William; Ferland, Albert J.; Klock, Paul; Maruska, Joshua; and Thornton, James B., 388,075, Cl. D14-116.000.
PT Prima Alloy Steel Universal: *See—*
Roesianto, Anto, 388,046, Cl. D12-209.000.
Pujals, Charles, Jr. Travel pillow. 387,937, Cl. D6-601.000.
Putco, Inc.: *See—*
Elwell, Dennis L.; and Sills, Robert L., 388,043, Cl. D12-190.000.
Q.I.S., Inc.: *See—*
Lodge, Daniel A., 388,176, Cl. D24-224.000.
Quaranta, Joseph: *See—*
Hannah, Marcia G.; Noone, Michael J.; Stahl, Kermit E.; Mehrer, George W.; and Quaranta, Joseph, 388,195, Cl. D25-139.000.
Quick Point, Inc.: *See—*
Visconti, Frank J., 387,967, Cl. D8-102.000.
Quinlan, David: *See—*
Ramos, Galileo P., Jr.; and Quinlan, David, 387,998, Cl. D10-30.000.
Quinn, Bruce A., to NCR Corporation. Outdoor information kiosk. 388,230, Cl. D99-28.000.
Rabinovitz, Josef. Connector. 387,969, Cl. D8-349.000.
Rager, Bernd: *See—*
Beermann, Frank; Rager, Bernd; and Armbrecht, Dieter, 387,914, Cl. D6-356.000.
Ramos, Galileo P., Jr.; and Quinlan, David, to Timer Corporation. Analog-digital combination watch casing. 387,998, Cl. D10-30.000.
Rasmussen, Kenn; and Øhrwald, Niels, to Interlego AG. Toy building element. 388,137, Cl. D21-108.000.
Rath, Klaus Peter, to A/S Modulex. Sign. 388,124, Cl. D20-42.000.
Rath, Klaus Peter, to A/S Modulex. Sign. 388,125, Cl. D20-42.000.
Rath, Klaus Peter, to A/S Modulex. Sign. 388,126, Cl. D20-42.000.
Ratliff, Billy Joe, Jr., to Goodyear Tire & Rubber Company, The. Tire tread. 388,028, Cl. D12-136.000.
Ratliff, Billy Joe, Jr., to Goodyear Tire & Rubber Company, The. Tire tread. 388,029, Cl. D12-136.000.
Ratliff, Billy Joe, Jr., to Goodyear Tire & Rubber Company, The. Tire tread. 388,038, Cl. D12-147.000.
Ratliff, Billy Joe, Jr., to Goodyear Tire & Rubber Company, The. Tire tread. 388,039, Cl. D12-147.000.
Rayo Ortigüela, Juan Carlos: *See—*
Canton Gongora, Antonio; Cruz Fernandez, Carlos Jesús; Muñagorri Enriquez, José María; and Rayo Ortigüela, Juan Carlos, 387,927, Cl. D6-495.000.
Reardon, Charles P. Truck cap having access doors. 388,049, Cl. D12-404.000.
Redmond Products, Inc.: *See—*
Fitten, Timothy E.; Lay, Dieter F.; and Bender, Thomas M., 387,988, Cl. D9-504.000.
Reed, Dale Lopez. Roller pole. 388,146, Cl. D21-230.000.
Regent Lighting Corporation: *See—*
Grossman, M. Gary; Meisner, Edward H.; Ballone, Michael P.; and Kiely, John E., 388,209, Cl. D26-63.000.
Rehband Anatomiska AB: *See—*
Eriksson, Thomas, 388,173, Cl. D24-192.000.
Rich, Joan K. Sports card earring. 388,013, Cl. D11-48.000.
Ricoh Company, Ltd.: *See—*
Sawada, Nozomi, 388,072, Cl. D14-114.300.
Yamamoto, Toshio; Sekine, Kyoko; and Sawada, Nozomi, 388,068, Cl. D14-114.300.
Yamamoto, Toshio; Sekine, Kyoko; and Sawada, Nozomi, 388,069, Cl. D14-114.300.
Yamamoto, Toshio; Sekine, Kyoko; and Sawada, Nozomi, 388,070, Cl. D14-114.300.
Yamamoto, Toshio; Sekine, Kyoko; and Sawada, Nozomi, 388,071, Cl. D14-114.300.
Yamamoto, Toshio; Sekine, Kyoko; and Sawada, Nozomi, 388,073, Cl. D14-114.000.
Risdon, Scott: *See—*
Keller, H. Thomas; and Risdon, Scott, 387,919, Cl. D6-393.000.
Keller, H. Thomas; and Risdon, Scott, 387,925, Cl. D6-438.000.
Ritchie, Ian; Gustafson, Kathryn; and Bardsley, Henry, to Electricite de France. Pylon. 388,192, Cl. D25-127.000.
Ritvik Group Group Inc., The: *See—*
Lanoix, Réal; Doyon, Jean-Christophe; Collin, Gilles; and Bourgeois, Daniel, 388,138, Cl. D21-143.000.
Robert, Michel Pierre Charles: *See—*
Scheuren, Daniel; Cazin-Bourguignon, Jean Francois; Robert, Michel Pierre Charles; and de Barsy, Olivier, 388,033, Cl. D12-146.000.
Robertson, William H., Jr.; Musil, Scott F.; Peebles, Douglas D.; and Karl, David H., to Motorola, Inc. Radio side connector. 388,053, Cl. D13-133.000.
Rocket Jewelry Box, Inc.: *See—*
Kaplan, Michael, 387,982, Cl. D9-423.000.
Roesianto, Anto, to PT Prima Alloy Steel Universal. Automobile and truck wheel. 388,046, Cl. D12-209.000.
Rohweder, Efimia Ellen; Miller, Frederick William; Kolowski, Michael Alois; Brown, Stephanie Carol; and Maxwell, Paul Bryan, to Goodyear Tire & Rubber Company, The. Tire tread. 388,037, Cl. D12-147.000.
Ronan, John S. Shears. 387,965, Cl. D8-98.000.
Ronzani, Peter A., to Xybernaut Corporation. Body worn portable battery container. 387,898, Cl. D3-215.000.
Rorke, Anthony Brooks; DuBois, Craig A.; and Swyst, Thomas, to Black & Decker Inc. Flexible light. 388,205, Cl. D26-43.000.
Rosebrock, Paul A., to Henredon Furniture Industries, Inc. Curio. 387,924, Cl. D6-436.000.
Roussel Uclaf: *See—*
Fekete, Guy, 388,171, Cl. D24-133.000.
Rowenta-Werke GmbH: *See—*
Stützer, Franz Alban; and Figur, Bernd, 387,908, Cl. D4-101.000.
Rubbermaid Incorporated: *See—*
Pesa, William A., 388,154, Cl. D23-209.000.
Saaf, Patrick Michael; and Schultz, Scott Alan, to Batesville Casket Company, Inc. Burial casket lid. 388,225, Cl. D99-12.000.
Saban, Rick. Bench. 387,915, Cl. D6-358.000.
Saban, Rick. Bench. 387,916, Cl. D6-358.000.
Sacco, Bruno: *See—*
Pfeiffer, Peter; and Sacco, Bruno, 388,047, Cl. D12-211.000.
Sadovenko, Isabelle, to Saint-Gobain Vitrage. Door. 388,178, Cl. D25-48.000.
Sagan, Michael J. A.: *See—*
Hayes, Thomas J.; Sagan, Michael J. A.; Gomoll, James N.; and Spencer, Mark, 387,986, Cl. D9-435.000.
Sage Products, Inc.: *See—*
Mosior, Donald J.; Ponsi, Lawrence G.; and O'Daniel, John, 387,981, Cl. D9-418.000.
Saint-Gobain Vitrage: *See—*
Sadovenko, Isabelle, 388,178, Cl. D25-48.000.
Sakagami, Tetsuya; and Terao, Hitoshi, to Asahi Tec Corporation. Vehicle wheel. 388,045, Cl. D12-209.000.
Sami, Mehrad: *See—*
Knight, Kimberly R.; and Sami, Mehrad, 388,147, Cl. D21-240.000.
Sandy Littman, Inc.: *See—*
Littman, Sandra E.; and Kaufman, Kirina S., 388,213, Cl. D26-85.000.
Sang, Daniel Lai Kong, to Timex Corporation. Watch bezel. 388,008, Cl. D10-128.000.
Sanyo Electric Co., Ltd.: *See—*
Tanaka, Yosuke; Uemura, Shigehiro; Hara, Toshio; and Takada, Kazuo, 388,060, Cl. D13-103.000.
Sato, Hisao. Paper binder. 388,118, Cl. D19-27.000.
Sato, Tadamitsu: *See—*
Kawauchi, Masahiko; Sato, Tadamitsu; Petermann, J. Scott; and Abed, Tark, 388,065, Cl. D14-114.000.
Sauer, Eugene. Bicycle frame. 388,025, Cl. D12-111.000.
Sawada, Nozomi, to Ricoh Company, Ltd. Portion of a screen of a programmed computer system or programmed facsimile machine. 388,072, Cl. D14-114.300.
Sawada, Nozomi: *See—*
Yamamoto, Toshio; Sekine, Kyoko; and Sawada, Nozomi, 388,068, Cl. D14-114.300.
Yamamoto, Toshio; Sekine, Kyoko; and Sawada, Nozomi, 388,069, Cl. D14-114.300.
Yamamoto, Toshio; Sekine, Kyoko; and Sawada, Nozomi, 388,070, Cl. D14-114.300.
Yamamoto, Toshio; Sekine, Kyoko; and Sawada, Nozomi, 388,071, Cl. D14-114.300.
Yamamoto, Toshio; Sekine, Kyoko; and Sawada, Nozomi, 388,073, Cl. D14-114.000.
Schafernak, Dale Edward; Lynch, Steven K.; and Pittman, Raymond H., to Masonite Corporation. Oak textured contoured panel. 388,196, Cl. D25-150.000.
Scheufele, Caroline, to Chopard Holding S.A. Ring. 388,010, Cl. D11-26.000.
Scheuren, Daniel; Cazin-Bourguignon, Jean Francois; Robert, Michel Pierre Charles; and de Barsy, Olivier, to Goodyear Tire & Rubber Company, The. Tire tread. 388,033, Cl. D12-146.000.
Schneider, Gladys. Lid tray. 387,952, Cl. D7-637.000.
Schultz, Scott Alan: *See—*
Saaf, Patrick Michael; and Schultz, Scott Alan, 388,225, Cl. D99-12.000.
Schuster, Daniel Edward, to Goodyear Tire & Rubber Company, The. Tire tread. 388,030, Cl. D12-142.000.
Schuster, Daniel Edward: *See—*

Loeffler, Ronald Lawrence; Young, Deborah Lynn; and Schuster, Daniel Edward, 388,031, Cl. D12-143.000.
Seiko Instruments Inc.: *See—*
Dobashi, Toshiyuki, 387,997, Cl. D10-30.000.
Sekine, Kyoko: *See—*
Yamamoto, Toshio; Sekine, Kyoko; and Sawada, Nozomi, 388,068, Cl. D14-114.300.
Yamamoto, Toshio; Sekine, Kyoko; and Sawada, Nozomi, 388,069, Cl. D14-114.300.
Yamamoto, Toshio; Sekine, Kyoko; and Sawada, Nozomi, 388,070, Cl. D14-114.300.
Yamamoto, Toshio; Sekine, Kyoko; and Sawada, Nozomi, 388,071, Cl. D14-114.300.
Yamamoto, Toshio; Sekine, Kyoko; and Sawada, Nozomi, 388,073, Cl. D14-114.000.
Severin Montres AG (Severin Montres SA) (Severin Montres Ltd): *See—*
Wunderman, Severin S., 388,001, Cl. D10-39.000.
Sharp Kabushiki Kaisha: *See—*
Iida, Koichi, 388,111, Cl. D16-231.000.
Shaw, Jack B. Bird repellant. 388,151, Cl. D22-120.000.
Sherwood-Templeton Coal Company, Inc.: *See—*
Thweatt, Carl, 388,161, Cl. D23-314.000.
Shiau, Shoei-Shuh. Flashlight. 388,202, Cl. D26-37.000.
Shields, Michael R. Beach table. 387,921, Cl. D6-417.000.
Sills, Robert L.: *See—*
Elwell, Dennis L.; and Sills, Robert L., 388,043, Cl. D12-190.000.
Simmons, Teresa. Toilet training device. 388,160, Cl. D23-297.000.
Sindelar, Mark: *See—*
Bauer, Witold; and Sindelar, Mark, 388,157, Cl. D23-238.000.
Sjostrom, Douglas D., to Smith & Nephew Endoscopy, Inc. Surgical handpiece. 388,170, Cl. D24-133.000.
Smalley, Douglas Alexander: *See—*
Desiano, Frank Michael; Jackson, Mark William; Muenkel, Gerard Francis; and Smalley, Douglas Alexander, 388,062, Cl. D14-102.000.
Smiley, Charles F.; and Jaggi, Cindy R., to Springs Window Fashions Division, Inc. Window treatment accessory. 387,974, Cl. D8-378.000.
Smith & Nephew Endoscopy, Inc.: *See—*
Sjostrom, Douglas D., 388,170, Cl. D24-133.000.
Smith, Brian G.; and Smith, Carol J. Wrist warmer. 387,886, Cl. D2-610.000.
Smith, Carol J.: *See—*
Smith, Brian G.; and Smith, Carol J., 387,886, Cl. D2-610.000.
Smith, Steven L.: *See—*
Barney, Ward W.; McLonis, Mark R.; Smith, Steven L.; Wooldridge, Ernest L.; York, Walter A.; and Young, H. Theodore, 388,168, Cl. D24-118.000.
Snitzer, Susan; and Hall, Peter. Belt hanger. 387,980, Cl. D9-415.000.
Snyder, Ronald M. All terrain riding vehicle. 388,131, Cl. D21-71.000.
Snyder, William P. Fishing rod holder and balancer. 388,153, Cl. D22-147.000.
Soehnle-Waagen GmbH & Co.: *See—*
Bachmayer, Nicolaus, 388,003, Cl. D10-91.000.
Solomita, Anthony: *See—*
Constantine, Richard; and Solomita, Anthony, 388,086, Cl. D14-150.000.
Sony Corporation: *See—*
Niijima, Makoto; and Kumagai, Yoshiaki, 388,095, Cl. D14-230.000.
Soren, Leonid: *See—*
Nagele, Albert L.; Soren, Leonid; Palmer, James D.; and Lo, Jose T., 388,082, Cl. D14-138.000.
Southpac Trust International, Inc.: *See—*
Weder, Donald E.; and Straeter, Joseph G., 388,018, Cl. D11-164.000.
Weder, Donald E.; and Straeter, Joseph G., 388,019, Cl. D11-164.000.
Weder, Donald E.; and Straeter, Joseph G., 388,020, Cl. D11-164.000.
Weder, Donald E.; and Straeter, Joseph G., 388,021, Cl. D11-164.000.
Spangler, Anthony G.: *See—*
Hill, Loran R.; and Spangler, Anthony G., 388,156, Cl. D23-238.000.
Spectrum Concepts, Inc.: *See—*
Hunt, Thomas A., 387,928, Cl. D6-511.000.
Spencer, Mark: *See—*
Hayes, Thomas J.; Sagan, Michael J. A.; Gomoll, James N.; and Spencer, Mark, 387,986, Cl. D9-435.000.
Springs Window Fashions Division, Inc.: *See—*
Smiley, Charles F.; and Jaggi, Cindy R., 387,974, Cl. D8-378.000.
Spyderco, Inc.: *See—*
Glesser, Louis S., 388,150, Cl. D22-118.000.
Horn, Jess, 387,966, Cl. D8-99.000.
Stahl, Kermit E.: *See—*
Hannah, Marcia G.; Noone, Michael J.; Stahl, Kermit E.; Mehrer, George W.; and Quaranta, Joseph, 388,195, Cl. D25-139.000.
Stairs, Daniel: *See—*
Caradonna, Robert; and Stairs, Daniel, 388,167, Cl. D24-107.000.
Stano, William S. Combined ankel and foot orthosis with orthowedge for wearing at night. 388,174, Cl. D24-192.000.
Starck, Philippe, to Thomson Multimedia (Societe Anonyme). Screen for a television set. 388,077, Cl. D14-126.000.
Steelcase Inc.: *See—*
Dormon, Nicholas Q.; and Oetman, David A., 387,922, Cl. D6-418.000.
Stewart, James W., to Clothesmate Products, Inc. Hanging closet hamper. 387,929, Cl. D6-513.000.
Straeter, Joseph G.: *See—*
Weder, Donald E.; and Straeter, Joseph G., 388,018, Cl. D11-164.000.
Weder, Donald E.; and Straeter, Joseph G., 388,019, Cl. D11-164.000.
Weder, Donald E.; and Straeter, Joseph G., 388,020, Cl. D11-164.000.
Weder, Donald E.; and Straeter, Joseph G., 388,021, Cl. D11-164.000.
Straub, Robert John. Multi purpose patio utility pole. 388,194, Cl. D25-134.000.
StreamLogic Corporation: *See—*
Laituri, David; and Haney, Gerome A., 388,074, Cl. D14-115.000.
Stützer, Franz Alban; and Figur, Bernd, to Rowenta-Werke GmbH. Electric toothbrush. 387,908, Cl. D4-101.000.
Sukumoda, Katsuyuki; Okonogi, Tatsuya; and Yoshikawa, Yukio, to Copal Company Limited. Light-emitting diode indicator. 388,123, Cl. D20-10.000.
Sung, Eric, to K.K.U. Ltd. Ratchet wrench. 387,960, Cl. D8-61.000.
Sutton, Wesley D.; Norquist, Thomas R.; and Henry, Brian, to Game Time, Inc. Playground slide. 388,148, Cl. D21-244.000.
Swift, Philip W.; and Ball, Alan, to Symbol Technologies, Inc. Optical scanner. 388,076, Cl. D14-116.000.
Swyst, Thomas: *See—*
Rorke, Anthony Brooks; DuBois, Craig A.; and Swyst, Thomas, 388,205, Cl. D26-43.000.
Symbol Technologies, Inc.: *See—*
Swift, Philip W.; and Ball, Alan, 388,076, Cl. D14-116.000.
Takada, Kazuo: *See—*
Tanaka, Yosuke; Uemura, Shigehiro; Hara, Toshio; and Takada, Kazuo, 388,060, Cl. D13-103.000.
Talking Signs, Inc.: *See—*
Bond, C. Ward; and Crandall, William, 388,088, Cl. D14-155.000.
Tanaka, Chifuyu, to Canon Kabushiki Kaisha. Video camera with video tape recorder. 388,106, Cl. D16-202.000.
Tanaka, Makoto: *See—*
Gotou, Masato; Miyake, Takanori; and Tanaka, Makoto, 388,103, Cl. D15-127.000.
Tanaka, Yosuke; Uemura, Shigehiro; Hara, Toshio; and Takada, Kazuo, to Sanyo Electric Co., Ltd. Battery. 388,060, Cl. D13-103.000.
Tanio, Satoru: *See—*
Watarai, Kazuhiko; and Tanio, Satoru, 388,110, Cl. D16-217.000.
Taylor, Rodney Sherwood; Collins, Bobby Alton; Hazen, Timothy Myron; and Joiner, Walter Charles, to Bell Helicopter Textron Inc. Helicopter. 388,048, Cl. D12-328.000.
Tedesco, Romeo; and Beaulieu, Jocelyn, to Global Upholstery Company. Chair. 387,917, Cl. D6-366.000.
Tedesco, Vincent; and Hart, Virginia. Lounge chair cover. 387,939, Cl. D6-610.000.
Tefal S.A.: *See—*
Juteau, Patrick, 388,004, Cl. D10-92.000.
Telefonica de Espana, S.A.: *See—*
Canton Gongora, Antonio; Cruz Fernandez, Carlos Jesús; Muñagorri Enriquez, José Maria; and Rayo Ortigüela, Juan Carlos, 387,927, Cl. D6-495.000.
Tenneco Packaging: *See—*
Hayes, Thomas J.; Sagan, Michael J. A.; Gomoll, James N.; and Spencer, Mark, 387,986, Cl. D9-435.000.
Teracom Components AB: *See—*
Lundbäck, Hans Olof, 388,052, Cl. D13-133.000.
Terao, Hitoshi: *See—*
Sakagami, Tetsuya; and Terao, Hitoshi, 388,045, Cl. D12-209.000.
Thompson, Stephen W., to Oneida, Ltd. Spoon. 387,955, Cl. D7-653.000.
Thomson Multimedia (Societe Anonyme): *See—*
Starck, Philippe, 388,077, Cl. D14-126.000.
Thorne, Nicholas; and Meakin, Marcus, to Manik Motors, Inc. Grille guard. 388,042, Cl. D12-171.000.
Thornton, James B.: *See—*
Bayer, William; Ferland, Albert J.; Klock, Paul; Maruska, Joshua; and Thornton, James B., 388;075, Cl. D14-116.000.
Thweatt, Carl, to Sherwood-Templeton Coal Company, Inc. Water heater. 388,161, Cl. D23-314.000.
Timer Corporation: *See—*
Ramos, Galileo P., Jr.; and Quinlan, David, 387,998, Cl. D10-30.000.
Timex Corporation: *See—*
Campilan, Rolando Rico L., 388,009, Cl. D10-128.000.
Cobarrubias, Lani Encena, 387,999, Cl. D10-30.000.
Sang, Daniel Lai Kong, 388,008, Cl. D10-128.000.
Tokiyama, Masaru; Blatt, David Isaac; Beasley, Jeff Robert; and Henning, Michael Scott, to Motorola, Inc. Combined speaker and microphone. 388,094, Cl. D14-226.000.
Tokizaki, Hiroshi: *See—*
Hamamoto, Kouya; Tokizaki, Hiroshi; and Kuramochi, Izumi, 388,058, Cl. D12-147.000.
Tomforde, Johann; Manske, Jens; and Henrici, Christoph, to MC Micro Compact Car Aktingesellschaft. Exterior surface configuration of an automobile tail light assembly. 388,200, Cl. D26-28.000.
Toovey, Philip, to Fina Europe Societe Anonyne. Building element for a canopy fascia. 388,179, Cl. D25-56.000.
Town, Allen W.; and Town, Allen W., II. Pasta fork. 387,953, Cl. D7-643.000.
Town, Allen W., II: *See—*
Town, Allen W.; and Town, Allen W., II, 387,953, Cl. D7-643.000.
Tucker Housewares: *See—*
McEntee, Kathryn M., 387,904, Cl. D3-273.000.

Tuvy, Avraham; and DiLonardo, Michael P., to ANTEC Corp. Housing for cable television, direct broadcast satellite and multi-channel multi-point distribution systems. 388,061, Cl. D13-152.000.
Tycoon Jewelry, Inc.: *See—*
Kejejian, Toros, 388,016, Cl. D11-91.000.
Kejejian, Toros, 388,017, Cl. D11-91.000.
Uchino, Shigeru: *See—*
Yamakawa, Katsuhiko; and Uchino, Shigeru, 388,096, Cl. D14-230.000.
Yamakawa, Katsuhiko; and Uchino, Shigeru, 388,097, Cl. D14-230.000.
Yamakawa, Katsuhiko; and Uchino, Shigeru, 388,098, Cl. D14-230.000.
Yamakawa, Katsuhiko; and Uchino, Shigeru, 388,099, Cl. D14-230.000.
Uemura, Shigehiro: *See—*
Tanaka, Yosuke; Uemura, Shigehiro; Hara, Toshio; and Takada, Kazuo, 388,060, Cl. D13-103.000.
UMAX Data Systems, Inc.: *See—*
Chen, Tony; Chang, Thomas; and Wu, Jesse, 388,067, Cl. D14-114.000.
Urvoy, Jean-Jacques, to Meccano, S.A. Screwdriver. 387,964, Cl. D8-82.000.
Valentino, Joseph A. Mail box. 388,232, Cl. D99-30.000.
Vandigriff, John E. Combined container for computer software and manuals. 387,907, Cl. D3-319.000.
Van Halen, Edward; Peavey, Hartley D.; and DeCola, Jim, to Van Halen, Edward. Guitar peghead. 388,117, Cl. D17-20.000.
Vaughan Furniture Company: *See—*
Keller, H. Thomas; and Risdon, Scott, 387,919, Cl. D6-393.000.
Vaughan Furniture Company, Inc.: *See—*
Keller, H. Thomas; and Risdon, Scott, 387,925, Cl. D6-438.000.
Vestuti, Ricardo, to Nike, Inc. Shoe outsole. 387,891, Cl. D2-959.000.
Victorian Gift Box, Inc.: *See—*
Magister, Francis Michael, 387,984, Cl. D9-430.000.
Villaescusa, Ernesto, to Mount Isa Mines Limited. Face plate. 388,193, Cl. D25-133.000.
Virginia Tech Intellectual Properties, Inc.: *See—*
Weber, Michael E., 388,198, Cl. D26-27.000.
Visconti, Frank J., to Quick Point, Inc. Envelope opener. 387,967, Cl. D8-102.000.
Vtech Communications Ltd.: *See—*
Hung, Joseph Chan Ka, 388,084, Cl. D14-149.000.
Vtech Industries, LLC.: *See—*
Chow, Chi K.W.; Chong, Joan K.L.; and Wai, Maisy M.S., 388,120, Cl. D19-60.000.
W. L. Gore & Associates, Inc.: *See—*
Dolan, John W., 387,979, Cl. D9-415.000.
Wai, Maisy M.S.: *See—*
Chow, Chi K.W.; Chong, Joan K.L.; and Wai, Maisy M.S., 388,120, Cl. D19-60.000.
Walter, Christopher G.: *See—*
Maxwell, Matthew C.; and Walter, Christopher G., 388,132, Cl. D21-70.000.
Wan, Yiu Kwong, to Fee Tat Holdings (H.K.) Limited. Combined fan, fluorescent light, radio and clock. 388,203, Cl. D26-38.000.
Wang, Jui-Shang: *See—*
Chiu, Bernard; Wang, Jui-Shang; Longan, John; Marvin, Robert L., Jr.; and O'Grady, Richard M., 388,162, Cl. D23-356.000.
Wang, Wen-te. Visor for sunglasses. 388,116, Cl. D16-340.000.
Washington, Byron S.: *See—*
Ellis, Charles H.; and Washington, Byron S., 387,901, Cl. D3-226.000.
Watarai, Kazuhiko; and Tanio, Satoru, to Olympus Optical Co., Ltd. Single lens reflex camera. 388,110, Cl. D16-217.000.
Weber, Michael E., to Virginia Tech Intellectual Properties, Inc. Fiber optic accent light. 388,198, Cl. D26-27.000.
Weder, Donald E.; and Straeter, Joseph G., to Southpac Trust International, Inc. Flower pot cover. 388,018, Cl. D11-164.000.
Weder, Donald E.; and Straeter, Joseph G., to Southpac Trust International, Inc. Flower pot cover. 388,019, Cl. D11-164.000.
Weder, Donald E.; and Straeter, Joseph G., to Southpac Trust International, Inc. Flower pot cover. 388,020, Cl. D11-164.000.
Weder, Donald E.; and Straeter, Joseph G., to Southpac Trust International, Inc. Flower pot cover. 388,021, Cl. D11-164.000.
Wehr, Franklin W.: *See—*
Dallman, Ernest R.; and Wehr, Franklin W., 388,227, Cl. D99-28.000.
Weihbrecht, Richard. Swimming pool cover support. 388,180, Cl. D25-61.000.
Wetrich, Brian S.: *See—*
Magee, Paul D.; Delaney, Dan J.; Liesner, Kevin R.; Wetrich, Brian S.; Kerstetter, Tim E.; and Davis, John C., 388,231, Cl. D99-28.000.
Williams, Daniel L.: *See—*
Harris, Daryl R.; Williams, Daniel L.; and Mischenko, Nicholas, 388,080, Cl. D14-138.000.
Lohrding, Bradley K.; Williams, Daniel L.; and Kubicki, Timothy A., 388,079, Cl. D14-138.000.
Lohrding, Bradley K.; Williams, Daniel L.; Nona, Christopher J.; and Harris, Daryl R., 388,081, Cl. D14-138.000.
Mischenko, Nicholas; Harris, Daryl R.; and Williams, Daniel L., 388,078, Cl. D14-138.000.
Wireless Access: *See—*
Halstead, Whitfield G.; and Madden, Henry, 388,059, Cl. D14-191.000.
Wisler, Glade A., to Harker Creek Products, LLC. Lamb shaped head and neck support pillow. 387,935, Cl. D6-598.000.
Wolfcraft, Inc.: *See—*
Apolinski, Edmund; and Daniels, David R., 387,962, Cl. D8-70.000.
Wooldridge, Ernest L.: *See—*
Barney, Ward W.; McLonis, Mark R.; Smith, Steven L.; Wooldridge, Ernest L.; York, Walter A.; and Young, H. Theodore, 388,168, Cl. D24-118.000.
Word of Faith Christian Center Church: *See—*
Joshua, Jase, II, 388,234, Cl. D99-34.000.
Workman, Bradley P.; and Nilssen, Kenneth H., to Bath & Body Works, Inc. Combined bottle and cap. 387,993, Cl. D9-542.000.
Worthington, John Alfred. Miniature personal alarm. 388,006, Cl. D10-106.000.
Wright, Archer D.: *See—*
Baker, D. Michael; and Wright, Archer D., 387,932, Cl. D6-566.000.
Wu, Jesse: *See—*
Chen, Tony; Chang, Thomas; and Wu, Jesse, 388,067, Cl. D14-114.000.
Wunderman, Severin S., to Severin Montres AG (Severin Montres SA) (Severin Montres Ltd). Watch. 388,001, Cl. D10-39.000.
Xybernaut Corporation: *See—*
Ronzani, Peter A., 387,898, Cl. D3-215.000.
Yaguramaki, Iwao, to YKK Corporation. Slide fastener slider. 388,022, Cl. D11-221.000.
Yamaichi, Kiyoko: *See—*
Yasui, Tadashi; and Yamaichi, Kiyoko, 387,961, Cl. D8-68.000.
Yamakawa, Katsuhiko; and Uchino, Shigeru, to Harada Industry Co., Ltd. Antenna for an automobile. 388,096, Cl. D14-230.000.
Yamakawa, Katsuhiko; and Uchino, Shigeru, to Harada Industry Co., Ltd. Antenna for an automobile. 388,097, Cl. D14-230.000.
Yamakawa, Katsuhiko; and Uchino, Shigeru, to Harada Industry Co., Ltd. Antenna for an automobile. 388,098, Cl. D14-230.000.
Yamakawa, Katsuhiko; and Uchino, Shigeru, to Harada Industry Co., Ltd. Antenna for an automobile. 388,099, Cl. D14-230.000.
Yamamoto, Kazuo, to Olympus Optical Co., Ltd. Electronic still camera. 388,105, Cl. D16-202.000.
Yamamoto, Toshio; Sekine, Kyoko; and Sawada, Nozomi, to Ricoh Company, Ltd. Portion of a screen of a programmed computer system or programmed facsimile machine. 388,068, Cl. D14-114.300.
Yamamoto, Toshio; Sekine, Kyoko; and Sawada, Nozomi, to Ricoh Company, Ltd. Portion of a screen of a programmed computer system. 388,069, Cl. D14-114.300.
Yamamoto, Toshio; Sekine, Kyoko; and Sawada, Nozomi, to Ricoh Company, Ltd. Portion of a screen of a programmed computer system. 388,070, Cl. D14-114.300.
Yamamoto, Toshio; Sekine, Kyoko; and Sawada, Nozomi, to Ricoh Company, Ltd. Portion of a screen of a programmed computer system. 388,071, Cl. D14-114.300.
Yamamoto, Toshio; Sekine, Kyoko; and Sawada, Nozomi, to Ricoh Company, Ltd. Portion of a screen of a programmed computer system. 388,073, Cl. D14-114.000.
Yamazaki, Kazuhiko: *See—*
Mieki, Nariaki; and Yamazaki, Kazuhiko, 388,057, Cl. D14-114.000.
Yang, Roger, to Be-Yang Industrial Corp. Adjustable desk lamp. 388,210, Cl. D26-65.000.
Yang, Roger, to Be-Yang Industrial Corp. Adjustable floor lamp. 388,211, Cl. D26-65.000.
Yasui, Tadashi; and Yamaichi, Kiyoko, to Japan Storage Battery Co., Ltd.; and Izumi Products Company. Portable electro-hydraulic cutter. 387,961, Cl. D8-68.000.
Yin, David. Tool holder. 387,902, Cl. D3-271.000.
YKK Corporation: *See—*
Yaguramaki, Iwao, 388,022, Cl. D11-221.000.
Yokohama Rubber Co., Ltd., The: *See—*
Hamamoto, Kouya; Tokizaki, Hiroshi; and Kuramochi, Izumi, 388,058, Cl. D12-147.000.
Yoneyama, Takahisa, to Kabushiki Kaisha Toshiba. Function extended unit for a telephone. 388,102, Cl. D14-241.000.
York, Walter A.: *See—*
Barney, Ward W.; McLonis, Mark R.; Smith, Steven L.; Wooldridge, Ernest L.; York, Walter A.; and Young, H. Theodore, 388,168, Cl. D24-118.000.
Yorke, Chris G.; and Kernen, Kevin G. Smokeless tobacco can holder. 387,897, Cl. D3-215.000.
Yoshikawa, Yukio: *See—*
Sukumoda, Katsuyuki; Okonogi, Tatsuya; and Yoshikawa, Yukio, 388,123, Cl. D20-10.000.
Young, Deborah Lynn: *See—*
Loeffler, Ronald Lawrence; Young, Deborah Lynn; and Schuster, Daniel Edward, 388,031, Cl. D12-143.000.
Young, H. Theodore: *See—*
Barney, Ward W.; McLonis, Mark R.; Smith, Steven L.; Wooldridge, Ernest L.; York, Walter A.; and Young, H. Theodore, 388,168, Cl. D24-118.000.
Young, Linda S. Combined multiple sheet target practice board with stand. 388,128, Cl. D21-6.000.
Yurk, Arno Roland, to Landscape Forms, Inc. Picnic table. 387,913, Cl. D6-337.000.
Zurwelle, Donald W., to Black & Decker Inc. Flashlight. 388,201, Cl. D26-37.000.

LIST OF PLANT PATENTEES

DeVor Nurseries, Inc.: *See*—
Twomey, Jerry, 10,155, Cl. Plt.-18.000.

Glaser, Karl. Azalea plant named Karma. 10,158, Cl. Plt.-56.000.

Green Circle Growers, Inc.: *See*—
Wingerden, John Van, 10,159, Cl. Plt.-69.200.

Gross, Eduard, to Paul Ecke Ranch, Inc. Poinsettia plant named 'Darlyne'. 10,161, Cl. Plt.-86.300.

Gross, Eduard, to Paul Ecke Ranch, Inc. Poinsettia plant 'Red Baron'. 10,162, Cl. Plt.-86.400.

Gross, Eduard, to Paul Ecke Ranch, Inc. Poinsettia plant 'Sophie'. 10,163, Cl. Plt.-86.400.

Jacobsen, Aase, executrix: *See*—
Jacobsen, Peter, deceased, 10,160, Cl. Plt.-86.200.

Jacobsen, Peter, deceased (by Aase Jacobsen, executrix), to Paul Ecke Ranch, Inc. Poinsettia plant 'Pearl'. 10,160, Cl. Plt.-86.200.

Paul Ecke Ranch, Inc.: *See*—
Gross, Eduard, 10,161, Cl. Plt.-86.300.
Gross, Eduard, 10,162, Cl. Plt.-86.400.
Gross, Eduard, 10,163, Cl. Plt.-86.400.
Jacobsen, Peter, deceased, 10,160, Cl. Plt.-86.200.

Roberson, Robert J. Lantana plant named 'Robpatdes'. 10,156, Cl. Plt.-54.100.

Turner, Ted Leon, Sr. *Nerium oleander* plant 'Turner's 5-387'. 10,157, Cl. Plt.-54.100.

Twomey, Jerry, to DeVor Nurseries, Inc. Grandiflora rose variety named 'Twofavor'. 10,155, Cl. Plt.-18.000.

Wingerden, John Van, to Green Circle Growers, Inc. Saintpaulia plant named 'Dusk'. 10,159, Cl. Plt.-69.200.

CLASSIFICATION OF PATENTS

ISSUED DECEMBER 23, 1997

NOTE—First number, class; second number, subclass; third number, patent number

CLASS 2
1 5,699,555
9 5,699,556
[illegible] 5,699,558
67 5,699,559
[illegible] 5,699,560
239 5,699,557
412 5,699,561

CLASS 4
223 5,699,562
[illegible] 5,699,563

CLASS 5
503.1 5,699,564
504.1 5,699,565
613 5,699,566
614 5,699,567
628 5,699,568
655 5,699,569
713 5,699,570
724 5,699,571

CLASS 7
138 5,699,572

CLASS 8
137 5,700,293
5,700,294
156 5,699,573
189 5,700,295
489 5,700,296

CLASS 15
23 5,699,575
[illegible] 5,699,576
[illegible] 5,699,577
167.1 5,699,578
210.1 5,699,574
230.14 5,699,579
235.7 5,699,580
250.07 5,699,581
[illegible] 5,699,583
250.34 5,699,582
256.52 5,699,584
327.2 5,699,585
[illegible] 5,699,586

CLASS 16
114 R 5,699,587

CLASS 19
66 R 5,699,588
200 5,699,589

CLASS 24
71 J 5,699,590
304 5,699,591
432 5,699,592
445 5,699,593
632 5,699,594

CLASS 28
107 5,699,595
115 5,699,596

CLASS 29
25.01 5,700,297
25.03 5,699,597
27 C 5,699,598
34 B 5,699,599
251 5,699,600
278 5,699,601
335 5,699,602
450 5,699,603
564 5,699,604
603.14 5,699,605
611 5,699,606
612 5,699,607
623.1 5,700,298
5,700,299
623.5 5,700,300
747 5,699,608
830 5,699,609
840 5,699,610
5,699,611
843 5,699,612
852 5,699,613

CLASS 30
142 5,699,614
160 5,699,615
201 5,699,616
[illegible] 5,699,617
322 5,699,618
[illegible] 5,699,619
[illegible] 5,699,620

CLASS 33
1 M 5,699,621
414 5,699,622
758 5,699,623
[illegible] 5,699,624

CLASS 34
[illegible] 5,699,625
453 5,699,626

CLASS 36
28 5,699,627
59 C 5,699,628
97 5,699,629
124 5,699,630

CLASS 40
621 5,699,631

CLASS 43
25 5,699,632

CLASS 44
412 5,700,301

CLASS 47
40.5 5,699,634
57.5 5,699,635

CLASS 49
419 5,699,636

CLASS 51
[illegible] 5,700,302
[illegible] 5,700,303

CLASS 52
[illegible] [illegible]
204.53 5,699,637
309.4 [illegible]
[illegible] 5,699,641
707 5,699,639
719 5,699,642
742.14 5,699,643
[illegible] 5,699,644

CLASS 53
139.5 5,699,645
397 5,699,646
5,699,647
[illegible] 5,699,648
428 5,699,649
[illegible] 5,699,650
[illegible] 5,699,651
449 5,699,652
455 5,699,653
478 5,699,654
540 5,699,655
[illegible] B1 4,587,796

CLASS 55
337 5,700,304

CLASS 56
11.1 5,699,656

CLASS 57
22 5,699,657
76 5,699,658
245 5,699,659
293 5,699,660
328 5,699,661

CLASS 60
39.5 5,699,662
204 5,699,663
307 5,699,664
426 5,699,665
652 5,699,666
737 5,699,667

CLASS 62
3.1 5,699,668
3.64 5,699,669
[illegible] 5,699,670
[illegible] 5,699,671
[illegible] 5,699,672
93 5,699,673
115 5,699,674
149 5,699,675
264 5,699,676
[illegible] 5,699,677
292 5,699,678
617 5,699,679

CLASS 65
60.1 5,700,305
182.2 5,700,306
374.1 5,700,307

CLASS 66
202 5,699,680
213 5,699,681

CLASS 68
140 5,699,682
198 5,699,683

CLASS 70
234 5,699,684
264 5,699,685
283 5,699,686
376 5,699,687

CLASS 72
[illegible] [illegible]
68 5,699,689
[illegible] [illegible]
104 5,699,691
[illegible] [illegible]
199 [illegible]
200 [illegible]

CLASS 73
1 R [illegible]
3 [illegible]
[illegible] 5,700,951
19.03 5,700,952
105 5,700,953
116 5,700,954
[illegible] 5,700,955
735 [illegible]
861.357 5,700,957
[illegible]
[illegible] 5,700,959
[illegible] [illegible]
866 5,700,961

CLASS 74
490.06 5,699,695
502.6 [illegible]
[illegible] [illegible]
[illegible] [illegible]

CLASS 75
10.1 5,700,308
236 5,700,962
252 5,700,309

CLASS 76
113 5,699,700

CLASS 81
3.4 5,699,701
56 5,699,702
57.38 5,699,703
434 5,699,704

CLASS 83
13 5,699,705
18 5,699,706
100 5,699,707
180 5,699,708
[illegible] 5,699,709
[illegible] 5,699,710
743 5,699,711
[illegible] 5,699,712

CLASS 84
95.1 5,700,963
95.2 5,700,964
297 R 5,700,965
645 5,700,966

CLASS 89
1.42 5,700,967

CLASS 91
369.2 5,699,713
439 5,699,714

CLASS 92
12.2 5,699,715
5,699,716
98 R 5,699,717

CLASS 95
45 5,700,310
236 5,700,311

CLASS 99
[illegible] 5,699,718
299 5,699,719
323.9 5,699,720
[illegible] 5,699,722
336 5,699,721
443 C 5,699,723
[illegible] 5,699,724
494 5,699,725
516 5,699,726

CLASS 100
3 5,699,727
98 R [illegible]
99 5,699,729
233 5,699,730

CLASS 101
119 5,699,731
127 5,699,732
129 5,699,733
216 5,699,734
219 5,699,735
[illegible] 5,699,736
[illegible] 5,699,737
425 5,699,738
463.1 5,699,739
477 5,699,740
485 5,699,741
[illegible] 5,699,742
[illegible] 5,699,743

CLASS 102
312 5,700,968
313 5,700,969
[illegible] 5,700,970
[illegible] 5,700,971
[illegible] 5,700,972
[illegible] 5,700,973

CLASS 106
10 5,700,312
22 A 5,700,313
31.27 5,700,314
31.58 5,700,315
5,700,316
5,700,317
442 5,700,318
486 5,700,319

CLASS 108
109 5,699,744

CLASS 110
[illegible] 5,699,745
[illegible] 5,699,746

CLASS 114
221 R 5,699,748
270 5,699,749
357 5,699,750

CLASS 117
19 5,700,320
5,700,321

CLASS 118
50 5,700,322
308 5,700,323
407 5,700,324
411 5,700,325
723 MW 5,700,326

CLASS 119
6.8 5,699,751
51.03 5,699,752
52.1 5,699,753
166 5,699,754
846 5,699,755

CLASS 122
17 5,699,756

CLASS 123
18 R 5,699,757
21 [illegible]
[illegible] 5,699,759
41.74 [illegible]
73 A 5,699,761
90.22 5,699,762
184.21 5,699,763
196.5 5,699,764
[illegible] [illegible]
315 [illegible]
[illegible] 5,699,767
[illegible] [illegible]
414 [illegible]
[illegible] 5,699,770
[illegible] 5,699,771
[illegible] 5,699,772
[illegible] 5,699,773
[illegible] 5,699,775
531 5,699,776
580 5,699,777
698 5,699,778

CLASS 124
6 5,699,779
69 5,699,780
[illegible]

CLASS 125
21 5,699,782
[illegible]

CLASS 126
[illegible] 5,699,784
623 [illegible]

CLASS 128
[illegible] [illegible]
200.26 5,699,787
[illegible] [illegible]
[illegible] [illegible]
204.22 [illegible]
[illegible] 5,699,791
[illegible] [illegible]
[illegible] 5,699,793
[illegible] 5,699,794
[illegible] 5,699,795
642 5,699,796
653.1 5,699,797
[illegible]
[illegible]
653.2 5,699,800
5,699,801
[illegible] [illegible]
[illegible] [illegible]
[illegible] [illegible]
[illegible] [illegible]
[illegible] [illegible]
677 [illegible]
731 [illegible]
[illegible] [illegible]
869 5,699,747
[illegible] [illegible]

CLASS 131
365 5,699,811
374 5,699,812

CLASS 132
73 5,699,813
277 5,699,814
279 5,699,815
285 5,699,816

CLASS 134
1 5,700,328
1.1 5,700,327
10 5,700,329
22.19 5,700,330
29 5,700,331
102.2 5,699,817

CLASS 135
16 5,699,818
82 5,699,819
96 5,699,820

CLASS 136
249 5,700,467
[illegible] 5,700,332
[illegible] 5,700,333

CLASS 137
1 [illegible]
[illegible] [illegible]
[illegible]
[illegible] [illegible]
[illegible] [illegible]
244 [illegible]
268 [illegible]
375 5,699,828
383 [illegible]
554 [illegible]
614.03 [illegible]
614.2 [illegible]
[illegible] [illegible]
[illegible] [illegible]

CLASS 138
113 B1 4,930,544
[illegible] [illegible]

CLASS 139
22 5,699,836
102 5,699,837

CLASS 141
65 5,699,838
248 5,699,839
313 5,699,840
331 5,699,841
369 5,699,842

CLASS 144
208.9 5,699,843
329 5,699,844

CLASS 148
273 5,700,334
508 5,700,335

CLASS 149
109.6 5,700,974

CLASS 152
540 5,700,336

CLASS 156
64 5,700,337
89 5,700,338
117 5,700,339
152 5,700,340
172 5,700,341
245 5,700,342
295 5,700,343
336 5,700,344
356 5,700,345
357 5,700,346
425 5,700,347
636.1 5,700,348
657.1 5,700,349

CLASS 160
107 5,699,845
168.1 P 5,699,847
168.1 V 5,699,846

CLASS 162
29 5,700,350
75 5,700,351
111 5,700,352
143 5,700,353
5,700,354
246 5,700,355
358.1 5,700,356
358.3 5,700,357

CLASS 164
46 5,699,848
155.4 5,699,849
468 5,699,850

CLASS 165
42 5,699,851
76 5,699,852
104.21 5,699,853
121 5,699,854
133 5,699,855
166 5,699,856
202 5,699,857

CLASS 166
112 5,699,859
280 5,699,860
303 Re.35,696

382 5,699,858

CLASS 168
17 5,699,861

CLASS 169
53 5,699,862

CLASS 172
145 5,699,863

CLASS 173
91 5,699,864
162.2 5,699,865

CLASS 174
52.4 5,700,975
58 5,700,976
64 5,700,977
66 5,700,978
117 F 5,700,979
146 5,700,980
250 5,700,981

CLASS 175
78 5,699,866
296 5,699,867
339 5,699,868

CLASS 177
229 5,700,982

CLASS 180
65.5 5,699,869
247 5,699,870
5,699,871
291 5,699,872
402 5,699,873
443 5,699,874

CLASS 181
285 5,700,983

CLASS 182
1 5,699,875
127 5,699,876

CLASS 184
11.2 5,699,877

CLASS 187
234 5,699,878
249 5,699,879

CLASS 188
1.11 5,699,880
71.5 5,699,881
73.38 5,699,882
171 5,699,883
196 B 5,699,884
317 5,699,885

CLASS 190
108 5,699,886

CLASS 192
3.26 5,699,887
35 5,699,888
5,699,889
110 R 5,699,890

CLASS 198
370.09 5,699,892
370.1 5,699,891
478.1 5,699,893
678.1 5,699,894
731 5,699,895
747 5,699,896
750.8 5,699,897
806 5,699,898

CLASS 200
5 A 5,700,984
50.01 5,700,985
50.32 5,700,986
302.1 5,699,899

CLASS 203
31 5,700,358

CLASS 204
164 5,700,359
400 5,700,360
469 5,700,365
491 5,700,361

CLASS 205
87 5,700,366
191 5,700,362
271 5,700,363
425 5,700,364
785 5,700,367

CLASS 206
5.1 5,699,900
6.1 5,699,901
219 5,699,902
268 5,699,903
296 5,699,904
308.1 5,699,905
315.3 5,699,906
349 5,699,907
355 5,699,908
370 5,699,909
373 5,699,910
470 5,699,913
494 5,699,911
5,699,912
517 5,699,914
597 5,699,915
710 5,699,916

CLASS 208
48 AA 5,700,368

CLASS 209
18 5,699,917
166 5,700,369
397 5,699,918
518 5,699,919

CLASS 210
94 5,700,370
232 5,700,371
321.81 5,700,372
323.2 5,700,373
640 5,700,374
651 5,700,375
695 5,700,376
724 5,700,377
771 5,700,378

CLASS 215
11.3 5,699,920
11.5 5,699,921
208 5,699,922
247 5,699,923
252 5,699,924

CLASS 216
2 5,700,379
22 5,700,380
5,700,381
24 5,700,382
88 5,700,383

CLASS 219
56.1 5,700,987
69.12 5,700,384
121.13 5,700,988
121.45 5,700,989
121.64 5,700,990
430 5,700,991
466 5,700,992
483 5,700,993
497 5,700,994
615 5,700,995
626 5,700,996

CLASS 220
4.27 5,699,925
254 5,699,927
269 5,699,928
323 5,699,929
465 5,699,930
671 5,699,932
703 5,699,933

CLASS 222
1 5,699,934
94 5,699,935
107 5,699,936
129 5,699,937
146.5 5,699,938
166 5,699,939
394 5,699,940
486 5,699,941

CLASS 223
42 5,699,942

CLASS 224
197 5,699,943
326 5,699,944
402 5,699,945
564 5,699,985

CLASS 225
1 5,699,946
101 5,699,947

CLASS 227
10 5,699,948
132 5,699,949

CLASS 228
1.1 5,699,950
4.5 5,699,951
102 5,699,952
110.1 5,699,953
180.1 5,699,954
194 5,699,955

CLASS 229
92.8 5,699,956
117.12 5,699,957
120.37 5,699,958
125.26 5,699,959

CLASS 235
1 B 5,700,997
375 5,700,998
381 5,700,999
462 5,701,000
472 5,701,001
487 5,701,002

CLASS 237
7 A 5,699,960

CLASS 239
14.2 5,699,961
73 5,699,962
98 5,699,963
106 5,699,964
127.3 5,699,965
265.19 5,699,966
326 5,699,967
5,699,968

CLASS 241
24.12 5,699,969
82.5 5,699,970

CLASS 242
15.6 E 5,699,971
334 5,699,972
365 5,699,973
361.4 5,699,974
371 5,699,975
374 5,699,976
439 5,699,977
552 5,699,978
559.3 5,699,979
564.5 5,699,980

CLASS 244
1 N 5,699,981
63 5,699,982
118.5 5,699,983
122 R 5,699,984

CLASS 246
125 5,699,986

CLASS 248
89 5,699,987
122.1 5,699,988
219.2 5,699,989
309.1 5,699,990
352 5,699,991
605 5,699,992
690 5,699,993

CLASS 249
9 5,700,385

CLASS 250
205 5,701,003
207 5,701,004
226 5,701,005
227.16 5,701,006
231.13 5,701,007
352 5,701,008
366.1 5,701,009
370.06 5,701,010
370.09 5,701,011
491.2 5,701,012
491.1 5,701,013
492.22 5,701,014
495.1 5,701,015

CLASS 251
129.03 5,699,994
129.15 5,699,995

CLASS 252
862 5,700,386
863 5,700,387
67 5,700,388
79.2 5,700,389
182.24 5,700,390
299.01 5,700,391
5,700,392
299.63 5,700,393
301.21 5,700,394
389 5,700,395
5,700,396

312 5,700,397
500 5,700,398
5,700,399
513 5,700,400

CLASS 254
134.4 5,699,996

CLASS 256
26 5,699,997

CLASS 257
24 5,701,016
27 5,701,017
140 5,701,018
192 5,701,019
5,701,020
208 5,701,021
300 5,701,022
341 5,701,023
360 5,701,024
377 5,701,029
379 5,701,025
510 5,701,026
530 5,701,027
666 5,701,028
686 5,701,031
692 5,701,032
704 5,701,033
706 5,701,034
747 5,701,035
750 5,701,036
777 5,701,037

CLASS 261
27 5,700,401
35 5,700,402
112.2 5,700,403

CLASS 264
1.21 5,700,404
35 5,700,405
40.4 5,700,406
54 5,700,407
65 5,700,408
87 5,700,409
122 5,700,410
125 5,700,411
143 5,700,412
145 5,700,413
247 5,700,414
318 5,700,415
325 5,700,416
477 5,700,417
604 5,700,418
656 5,700,419

CLASS 266
44 5,700,420
48 5,700,421
94 5,700,422
103 5,700,423
108 5,700,424
145 5,700,425

CLASS 267
103 5,699,999
140.13 5,700,000
189 5,699,998
224 5,700,001

CLASS 270
58.12 5,700,002

CLASS 271
110 5,700,003
171 5,700,004
188 5,700,005
241 5,700,006

CLASS 273
118 A 5,700,007
5,700,008
269 5,700,009
292 5,700,010

CLASS 277
65 5,700,011
66 5,700,012
85 5,700,013
167.5 5,700,014
180 5,700,015
235 B 5,700,016
5,700,017

CLASS 279
19.4 5,700,018
154 5,700,019

CLASS 280
28 5,700,020
47.35 5,700,021
152.3 5,700,022

426 5,700,023
507 5,700,024
661 5,700,025
704 5,700,026
723 5,700,027
728.2 5,700,028
5,700,029
731 5,700,031
736 5,700,030
775 5,700,032
795 5,700,033
805 5,700,034
5,700,035

CLASS 283
72 5,700,036
107 5,700,037

CLASS 285
54 5,700,038
148.23 5,700,039
319 5,700,040
325 5,700,041

CLASS 292
80 5,700,042
256.6 5,700,043
336.3 5,700,044

CLASS 294
64.1 5,700,045
119.1 5,700,046

CLASS 296
26 5,700,047
163 5,700,048
188 5,700,049
189 5,700,050

CLASS 297
188.11 5,700,051
217.3 5,700,052
227 5,700,053
238 5,700,054
378.12 5,700,055
378.13 5,700,056
408 5,700,057
440.15 5,700,058
452.17 5,700,059
452.63 5,700,060

CLASS 299
43 5,700,061

CLASS 301
37.33 5,700,062

CLASS 303
9 5,700,067
19 5,700,065
5,700,066
24.1 5,700,068
115.2 5,700,069
115.4 5,700,070
119.2 5,700,071
135 5,700,072
146 5,700,073
186 5,700,074
961 5,700,063

CLASS 307
10.1 5,701,038

CLASS 310
12 5,701,039
5,701,041
5,701,042
13 5,701,040
26 5,701,043
54 5,701,044
62 5,701,045
251 5,701,046
254 5,701,047
321 5,701,048
359 5,701,049

CLASS 312
85 5,700,075

CLASS 313
25 5,701,050
318.1 5,701,051
346 R 5,701,052
412 5,701,053
467 5,701,054
504 5,701,055
584 5,701,056

CLASS 315
111.21 5,701,057
158 5,701,058
219 5,701,059
227 R 5,701,060

CLASS 318
51 5,701,062
469 5,701,063
701 5,701,064
5,701,065
808 5,701,066

CLASS 320
2 5,701,067
15 5,701,068
21 5,701,069

CLASS 322
37 5,701,070

CLASS 323
220 5,701,071
312 5,701,072

CLASS 324
117 H 5,701,073
307 5,701,074
318 5,701,075
322 5,701,076
399 5,701,077
430 5,701,078
538 5,701,079
539 5,701,080
555 5,701,081
628 5,701,082
642 5,701,083
690 5,701,084
754 5,701,085
762 5,701,086
765 5,701,087
5,701,088
772 5,701,089

CLASS 326
32 5,701,090
41 5,701,091
5,701,092
98 5,701,093
113 5,701,094

CLASS 327
410 5,701,095
536 5,701,096
538 5,701,097
5,701,098
552 5,701,099
559 5,701,100
561 5,701,101

CLASS 330
253 5,701,102
290 5,701,103

CLASS 331
96 5,701,104
153 5,701,105

CLASS 332
100 5,701,106

CLASS 333
164 5,701,107
202 5,701,108

CLASS 335
78 5,701,109
132 5,701,110
177 5,701,111
216 5,701,112
285 5,701,113

CLASS 336
115 5,701,114

CLASS 340
286.05 5,701,115
431 5,701,116
567 5,701,117
638 5,701,118
682 5,701,119
825.02 5,701,120
825.54 5,701,121
932.2 5,701,122

CLASS 341
22 5,701,123
50 5,701,124
63 5,701,125
67 5,701,126

CLASS 342
42 5,701,127

CLASS 343
700 MS 5,701,128
873 5,701,129
893 5,701,130

CLASS 345
8 5,701,131
5,701,132
46 5,701,133
74 5,701,134
89 5,701,135
100 5,701,136
119 5,701,137
132 5,701,138
145 5,701,139
156 5,701,140
157 5,701,141
168 5,701,142
185 5,701,143
188 5,701,144

CLASS 347
23 5,701,145
26 5,701,146
58 5,701,147
89 5,701,149
92 5,701,148
212 5,701,150
247 5,701,151

CLASS 348
3 5,701,152
15 5,701,153
42 5,701,154
72 5,701,155
86 5,701,156
95 B1 5,255,096
240 5,701,157
410 5,701,158
5,701,159
413 5,701,160
468 5,701,161
570 5,701,162
578 5,701,163
699 5,701,164

CLASS 349
5 5,701,165
38 5,701,166
42 5,701,167
130 5,701,168

CLASS 353
31 5,700,076

CLASS 355
30 5,701,169
40 5,701,170
76 5,701,171

CLASS 356
28 5,701,172
73 5,701,173
237 5,701,174
326 5,701,175
338 5,701,176
350 5,701,177
371 5,701,178
376 5,701,179
429 5,701,180
446 5,701,181

CLASS 358
296 5,701,182
404 5,701,183
450 5,701,184
471 5,701,185

CLASS 359
125 5,701,186
143 5,701,187
161 5,701,188
172 5,701,189
205 5,701,190
5,701,191
224 5,701,192
290 5,701,193
341 5,701,194
5,701,195
362 5,701,196
386 5,701,198
389 5,701,197
432 5,701,199
435 5,701,200
487 5,701,201
631 5,701,202
644 5,701,475
666 5,701,203
684 5,701,204
691 5,701,205
704 5,701,206
717 5,701,207
822 5,701,208
823 5,701,209
831 5,701,210
873 5,701,211

CLASS 360
51 5,701,212
66 5,701,213
71 5,701,214
96.5 5,701,215
99.02 5,701,216
99.05 5,701,217
104 5,701,218
105 5,701,219
106 5,701,220
113 5,701,221
5,701,222
5,701,223
128 5,701,224
132 5,701,225

CLASS 361
63 5,701,226
118 5,701,227
234 5,701,228
617 5,701,229
681 5,701,230
683 5,701,231
5,701,232
735 5,701,233
773 5,701,234

CLASS 362
26 5,701,235
32 5,700,077
5,700,078
80 5,700,079
5,700,080
123 5,700,081
152 5,701,236
226 5,700,082
249 5,700,083
275 5,700,084
399 5,700,085

CLASS 363
20 5,701,237
21 5,701,238
35 5,701,239
5,701,240
5,701,241
89 5,701,243
146 5,701,244

CLASS 364
424.046 5,701,245
424.047 5,701,246
424.098 5,701,247
425.01 5,701,248
464.13 5,701,250
464.18 5,701,249
474.24 5,701,251
479 5,701,252
483 5,701,253
489 5,701,254
491 5,701,255
496 5,701,256
508 5,701,257
514 R 5,701,258
571.01 5,701,259
606 5,701,260
724.01 5,701,261
724.19 5,701,262
725 5,701,263

CLASS 365
149 5,701,264
185.03 5,701,265
5,701,266
201 5,701,267
205 5,701,268
210 5,701,269
230.01 5,701,274
230.02 5,701,271
230.03 5,701,270
230.06 5,701,272
230.08 5,701,273
233 5,701,275

CLASS 366
172.2 5,700,086
241 5,700,087

CLASS 367
133 5,701,276
163 5,701,277

CLASS 368
204 5,701,278

CLASS 369
13 5,701,279
5,701,280
32 5,701,281
5,701,282
44.41 5,701,283
50 5,701,284
59 5,701,285

109 5,701,286
110 5,701,287
112 5,701,288
5,701,289
[illegible] 5,701,290

CLASS 370
232 5,701,291
5,701,292
244 5,701,293
252 5,701,294
271 5,701,295
282 5,701,296
341 5,701,297
346 5,701,298
376 5,701,299
392 5,701,300
428 5,701,301
521 5,701,302
522 5,701,303

CLASS 371
10.2 5,701,304
20.1 5,701,305
22.1 5,701,306
22.3 5,701,307
5,701,308
25.1 5,701,309
30 5,701,310
32 5,701,311
5,701,312
40.2 5,701,313
40.3 5,701,314
51.1 5,701,315
53 5,701,316

CLASS 372
5 5,701,317
6 5,701,318
18 5,701,319
32 5,701,320
44 5,701,321
46 5,701,322
54 5,701,323
92 5,701,324
96 5,701,325
99 5,701,326
5,701,327

CLASS 374
141 5,700,088
142 5,700,089
210 5,700,090

CLASS 375
204 5,701,328
224 5,701,329
257 5,701,330
316 5,701,331
334 5,701,332
347 5,701,333
364 5,701,334

CLASS 377
69 5,701,335

CLASS 378
132 5,701,336

CLASS 379
57 5,701,337
58 5,701,338
88 5,701,339
204 5,701,340
433 5,701,341

CLASS 380
4 5,701,342
5,701,343

CLASS 381
1 5,701,344
13 5,701,345
18 5,701,346
24 5,701,347
68.6 5,701,348
69.2 B1 4,961,230
71 5,701,349
5,701,350
104 5,701,352
106 5,701,353
157 5,701,354
169 5,701,355
187 5,701,356
199 5,701,357
202 5,701,358
203 5,701,359

CLASS 382
131 5,701,360
138 5,701,361
149 5,701,362
174 5,701,363

178 5,701,364
212 5,701,365
237 5,701,366
239 5,701,367
5,701,368
249 5,701,369

CLASS 383
63 5,700,091

CLASS 384
115 5,700,092
276 5,700,093
569 5,700,094

CLASS 385
13 5,701,370
17 5,701,371
24 Re.35,697
5,701,372
33 5,701,373
49 5,701,374
74 5,701,375
123 5,701,376
124 5,701,377
126 5,701,378
131 5,701,379
134 5,701,380
139 5,701,381
140 5,701,382

CLASS 386
46 5,701,383
70 5,701,384
106 5,701,385
909 5,701,386

CLASS 392
456 5,701,387
471 5,701,388

CLASS 395
2.12 5,701,389
2.15 5,701,390
2.21 5,701,391
2.28 5,701,392
2.67 5,701,393
11 5,701,394
20 5,701,395
25 5,701,396
27 5,701,397
5,701,398
51 5,701,399
76 5,701,400
109 5,701,401
115 5,701,402
119 5,701,403
123 5,701,404
141 5,701,405
182.04 5,701,406
182.05 5,701,407
183.14 5,701,408
183.17 5,701,409
183.19 5,701,410
200.01 5,701,412
5,701,427
200.02 5,701,413
200.09 5,701,414
5,701,415
200.1 5,701,411
200.15 5,701,416
200.16 5,701,417
5,701,418
227 5,701,419
284 5,701,420
309 5,701,421
5,701,422
335 5,701,423
353 5,701,424
376 5,701,425
403 5,701,426
441 5,701,429
445 5,701,430
455 5,701,431
457 5,701,432
481 5,701,433
484 5,701,434
486 5,701,435
489 5,701,436
5,701,437
497.01 5,701,438
800 5,701,439
5,701,440
5,701,441
5,701,442
5,701,443
306 5,701,444
516 5,701,445
551 5,701,446
559 5,701,447
580 5,701,448
586 5,701,449
595 5,701,450

600 5,701,451
601 5,701,452
602 5,701,453
5,701,454
5,701,455
603 5,701,459
5,701,460
604 5,701,456
5,701,461
608 5,701,457
609 5,701,458
610 5,701,462
5,701,463
5,701,464
5,701,465
611 5,701,466
5,701,467
612 5,701,468
613 5,701,469
614 5,701,470
616 5,701,471
619 5,701,472
621 5,701,473
5,701,474
632 5,701,476
5,701,477
5,701,478
670 5,701,479
671 5,701,480
675 5,701,482
676 5,701,481
681 5,701,483
683 5,701,484
5,701,485
704 5,701,486
5,701,487
5,701,488
705 5,701,489
5,701,490
712 5,701,491
5,701,492
731 5,701,493
735 5,701,494
736 5,701,495
739 5,701,496
753 5,701,497
762 5,701,498
764 5,701,499
779 5,701,500
800 5,701,501
5,701,502
5,701,503
5,701,504
5,701,505
5,701,506
5,701,507
5,701,508
5,701,509
806 5,701,510
5,701,511
821 5,701,512
826 5,701,513
834 5,701,514
5,701,515
842 5,701,516
849 5,701,546
886 5,701,517

CLASS 396
29 5,701,518
48 5,701,519
5,701,520
52 5,701,521
53 5,701,522
81 5,701,523
123 5,701,524
132 5,701,525
234 5,701,526
268 5,701,528
277 5,701,527
310 5,701,529
311 5,701,530
319 5,701,531
326 5,701,532
349 5,701,533
373 5,701,534
5,701,535
396 5,701,536
463 5,701,537
512 5,701,538
515 5,701,539
565 5,701,540
569 5,701,541
578 5,701,542
609 5,701,544
620 5,701,543
626 5,701,545

CLASS 399
1 5,701,547
8 5,701,548
36 5,701,549
44 5,701,550

50 5,701,551
53 5,701,552
55 5,701,553
69 5,701,554
5,701,555
70 5,701,556
77 5,701,557
103 5,701,558
149 5,701,559
159 5,701,560
233 5,701,561
265 5,701,562
284 5,701,563
285 5,701,564
286 Re.35,698
299 5,701,565
302 5,701,566
5,701,567
5,701,568
308 5,701,569
343 5,701,570
5,701,571
354 5,701,572
384 5,701,573

CLASS 400
55 5,700,095
225 5,700,096
487 5,700,097
615.2 5,700,098
625 5,700,099

CLASS 401
4 5,700,100
52 5,700,101

CLASS 403
170 5,700,102
260 5,700,103
265 5,700,104
408.1 5,700,105

CLASS 404
8 5,700,106

CLASS 405
26 5,700,108
128 5,700,107
5,700,109
154 5,700,110
258 5,700,111

CLASS 406
93 5,700,112

CLASS 408
1 R 5,700,113
126 5,700,115

CLASS 409
141 5,700,116
164 5,700,117

CLASS 410
113 5,700,118

CLASS 411
78 5,700,119
399 5,700,120
432 5,700,121
551 5,700,122

CLASS 414
11 5,700,123
111 5,700,124
276 5,700,125
416 5,700,126
5,700,127
789.1 5,700,128

CLASS 415
138 5,700,129

CLASS 416
95 5,700,130
97 R 5,700,131
5,700,132
248 5,700,133

CLASS 417
133 5,700,134
269 5,700,135
270 5,700,136
364 5,700,137
366 5,700,138
462 5,700,139

CLASS 418
104 5,700,140

CLASS 419
88 5,701,574
28 5,701,575

29 5,701,576

CLASS 420
476.6 5,700,582

CLASS 422
[illegible] 5,700,426
52 5,700,427
[illegible] [illegible]
[illegible] 5,700,429
125 5,700,430
139 5,700,431
146 5,700,432
171 5,700,433
173 5,700,434
245.1 5,700,435
[illegible] 5,700,577

CLASS 423
[illegible] 5,700,436
220 5,700,437
228 5,700,438
[illegible] 5,700,439
231 [illegible]
[illegible] 5,700,441
599 5,700,442
647.7 5,700,443

CLASS 424
[illegible] 5,700,444
[illegible] 5,700,445
[illegible] 5,700,446
[illegible] 5,700,447
9.33 5,700,448
[illegible] 5,700,449
[illegible] 5,700,450
5,700,451
5,700,452
64 5,700,453
70.14 5,700,455
70.17 5,700,456
[illegible] 5,700,454
[illegible] 5,700,457
[illegible] 5,700,458
[illegible] 5,700,459
[illegible] 5,700,460
[illegible] 5,700,461
[illegible] 5,700,462
[illegible] 5,700,464
130.1 5,700,465
145.1 5,700,466
195.1 [illegible]
208.1 5,700,469
233.1 5,700,470
400 5,700,471
[illegible] 5,700,472
5,700,473
5,700,474
408 5,700,475
[illegible] 5,700,476
5,700,477
[illegible] 5,700,478
[illegible] 5,700,479
[illegible] [illegible]
[illegible] 5,700,481
[illegible] [illegible]
[illegible] 5,700,483
496 5,700,484
[illegible] 5,700,485
[illegible]
650 5,700,487

CLASS 425
72.1 [illegible]
5,700,489
72.2 5,700,490
5,700,491
100 5,700,492
[illegible] 5,700,493
131.1 5,700,494
190 5,700,495
[illegible] 5,700,496
[illegible] 5,700,497
532 [illegible]
564 [illegible]
572 [illegible]
[illegible] [illegible]
589 [illegible]

CLASS 426
2 Re.35,699
[illegible] 5,700,503
240 [illegible]
312 [illegible]
316 [illegible]
332 [illegible]
[illegible] [illegible]
[illegible] [illegible]
[illegible] 5,700,510
[illegible] 5,700,511
[illegible] 5,700,512
590 5,700,513
656 [illegible]

660 5,700,514

CLASS 427
[illegible] 5,700,515
155 5,700,516
[illegible] 5,700,517
249 5,700,518
253 5,700,519
255.1 5,700,520
[illegible] 5,700,521
[illegible] 5,700,522
[illegible] 5,700,523
402 5,700,524
416 5,700,525
527 5,700,526

CLASS [illegible]
[illegible] 5,700,527
[illegible] 5,700,528
35.8 5,700,529
35.9 5,700,530
36.1 5,700,531
5,700,532
36.3 5,700,533
[illegible] 5,700,534
[illegible] 5,700,535
5,700,536
41.9 5,700,537
57 5,700,538
64.1 5,700,539
65.4 5,700,541
68 5,700,542
71 5,700,543
76 5,700,544
131 5,700,545
[illegible] 5,700,546
[illegible] 5,700,547
[illegible] 5,700,548
210 5,700,549
212 5,700,550
5,700,551
214 5,700,552
[illegible] 5,700,553
5,700,554
233 5,700,555
[illegible] 5,700,556
312.4 5,700,557
316.6 5,700,558
319.7 5,700,559
325 5,700,560
327 5,700,561
5,700,562
[illegible] 5,700,563
332 5,700,564
5,700,565
5,700,566
5,700,567
334 5,700,568
[illegible] 5,700,569
342 5,700,570
352 5,700,571
357 5,700,572
[illegible] 5,700,573
[illegible] 5,700,574
[illegible] 5,700,575
412 5,700,576
421 5,700,578
437 5,700,579
[illegible] [illegible]
447 5,700,581
[illegible] 5,700,583
[illegible] 5,700,584
[illegible] 5,700,585
[illegible] 5,700,586
528 5,700,587
[illegible] 5,701,577
[illegible] 5,701,578
611 [illegible]
[illegible] 5,700,540
[illegible] 5,700,591
5,700,592
[illegible] BA 5,700,594
[illegible] TS 5,700,593

CLASS 429
13 5,700,595
206 5,700,596
218 5,700,597
5,700,598
249 5,700,599
5,700,600

CLASS 430
5 5,700,601
5,700,602
5,700,603
[illegible]
5,700,605
[illegible]
15 5,700,607
20 5,700,608
27 5,700,609
30 5,700,610

[illegible] 5,700,611
[illegible] 5,700,612
[illegible] 5,700,613
[illegible] 5,700,614
[illegible] 5,700,615
[illegible] 5,700,616
5,700,617
[illegible] 5,700,618
[illegible] 5,700,619
[illegible] 5,700,620
[illegible] 5,700,621
[illegible] 5,700,622
[illegible] 5,700,623
[illegible] 5,700,624
5,700,625
[illegible] 5,700,626
[illegible] 5,700,627
[illegible] 5,700,628
[illegible] 5,700,629
[illegible] 5,700,630
[illegible] 5,700,631

CLASS 431
[illegible] 5,700,141
5,700,142
[illegible] 5,700,143

CLASS 432
[illegible] 5,700,144

CLASS 433
[illegible] 5,700,145
[illegible] 5,700,146
[illegible] 5,700,147
[illegible] 5,700,148

CLASS 434
[illegible] 5,700,149

CLASS 435
[illegible] 5,700,632
[illegible] 5,700,634
[illegible] 5,700,635
[illegible] 5,700,636
5,700,637
5,700,638
5,700,639
5,700,640
5,700,641
5,700,642
5,700,643
5,700,644
5,700,645
5,700,646
5,700,647
[illegible] 5,700,648
5,700,649
5,700,650
[illegible] 5,700,652
[illegible] 5,700,653
[illegible] 5,700,654
[illegible] 5,700,655
[illegible] 5,700,656
[illegible] 5,700,657
5,700,658
5,700,659
5,700,660
5,700,661
[illegible] 5,700,662
[illegible] 5,700,664
[illegible] 5,700,663
[illegible] 5,700,665
[illegible] 5,700,666
[illegible] 5,700,667
[illegible] 5,700,668
[illegible] 5,700,669
[illegible] 5,700,670
[illegible] 5,700,671
[illegible] 5,700,672
[illegible] 5,700,673
[illegible] 5,700,674
[illegible] 5,700,675
[illegible] 5,700,676
[illegible] 5,700,677
[illegible] 5,700,678
[illegible] 5,700,679
[illegible] 5,700,680
[illegible] 5,700,681
[illegible] 5,700,682
[illegible] 5,700,683
[illegible] 5,700,684
[illegible] 5,700,685
[illegible] 5,700,686
[illegible] 5,700,687
[illegible] [illegible]
[illegible] [illegible]
[illegible] 5,700,690
[illegible] 5,700,691

CLASS 436
[illegible] 5,700,692
[illegible] 5,700,693
5,700,694

180 5,700,695

CLASS 437
1 5,700,696
8 5,700,697
5,700,698
21 5,700,699
5,700,700
31 5,700,701
34 5,700,702
40 5,700,703
52 5,700,704
5,700,705
5,700,706
5,700,707
5,700,708
[illegible] 5,700,709
5,700,710
5,700,711
62 5,700,712
129 5,700,713
167 5,700,714
183 5,700,715
190 5,700,716
192 5,700,717
5,700,718
193 5,700,719
[illegible] 5,700,720
[illegible] 5,700,721
[illegible] 5,700,722
214 5,700,723
215 5,700,724
[illegible] 5,700,725
[illegible] 5,700,726

CLASS 438
[illegible] 5,700,727
216 5,700,728
230 5,700,729
[illegible] 5,700,730
381 5,700,731
[illegible] 5,700,732
[illegible] 5,700,733
[illegible] 5,700,734
612 5,700,735
622 5,700,736
[illegible] 5,700,737
653 5,700,738
655 5,700,739
710 5,700,740
723 5,700,741

CLASS 439
4 5,700,150
74 5,700,151
[illegible] 5,700,152
[illegible] 5,700,153
[illegible] 5,700,154
[illegible] 5,700,155
471 5,700,156
[illegible] 5,700,157
[illegible] 5,700,158
571 5,700,159
578 5,700,160
587 5,700,161
[illegible] 5,700,162
B1 4,806,123
[illegible] 5,700,163
[illegible] 5,700,164
621 5,700,165
676 5,700,167

CLASS 440
1 5,700,168
46 5,700,169
47 5,700,170
87 5,700,171
88 5,700,172

CLASS 441
57 5,700,173
65 5,700,174

CLASS 442
123 5,700,742
243 5,700,743

CLASS 445
24 5,700,175
25 5,700,176

CLASS 446
117 5,700,177
301 5,700,178

CLASS 451
5 5,700,180
28 B1 5,396,737
40 5,700,181
41 5,700,179
45 5,700,182
182 5,700,183
194 5,700,184

365 5,700,185
406 5,700,186
495 5,700,187
532 5,700,188
555 5,700,189

CLASS 454
57 5,700,190
69 5,700,191
258 5,700,192

CLASS 455
3.1 5,701,579
5,701,580
5.1 5,701,581
5,701,582
25 5,701,583
33.1 5,701,584
33.2 5,701,585
33.4 5,701,586
34.1 5,701,587
38.4 5,701,588
56.1 5,701,589
62 5,701,590
63 5,701,591
69 5,701,592
70 5,701,593
78 5,701,594
83 5,701,595
103 5,701,596
127 5,701,597
161.2 5,701,598
186.1 5,701,599
208 5,701,600
226.2 5,701,601
260 5,701,602
277.1 5,701,603

CLASS 463
3 5,700,193
29 5,700,195
37 5,700,194

CLASS 464
36 5,700,196
69 5,700,197
71 5,700,198

CLASS 470
19 5,700,199

CLASS 472
26 5,700,200
103 5,700,201

CLASS 473
139 5,700,203
142 5,700,202
199 5,700,204
232 5,700,205
293 5,700,206
313 5,700,207
324 5,700,208
380 5,700,209
535 5,700,210
613 5,700,211

CLASS 474
70 5,700,212
110 5,700,213
5,700,214
5,700,215
5,700,216
217 5,700,217

CLASS 475
12 5,700,218
47 5,700,219
129 5,700,220
146 5,700,221
204 5,700,222
269 5,700,223

CLASS 477
45 5,700,224
46 5,700,225
156 5,700,226
171 5,700,227

CLASS 482
62 5,700,228
83 5,700,229
5,700,230
124 5,700,231
125 5,700,232

CLASS 492
1 5,700,233

CLASS 501
15 5,700,744
134 5,700,745
201 5,700,746

CLASS 502
[illegible] 5,700,747
102 5,700,748
117 5,700,749
5,700,750
255 5,700,751
311 5,700,752
[illegible] 5,700,753
[illegible] 5,700,754

CLASS 503
227 5,700,755
5,700,756
5,700,757

CLASS 504
[illegible] 5,700,758
133 5,700,759
[illegible] 5,700,760
221 5,700,761
292 5,700,762

CLASS 507
125 5,700,763

CLASS 508
[illegible] 5,700,764
378 5,700,765
[illegible] 5,700,766
[illegible] 5,700,767

CLASS 510
214 5,700,768
[illegible] 5,700,769
5,700,770
315 5,700,771
421 5,700,772
[illegible] 5,700,773

CLASS 514
[illegible] 5,700,774
12 5,700,775
5,700,776
5,700,777
5,700,778
14 5,700,779
17 5,700,780
[illegible] 5,700,781
5,700,782
5,700,783
24 5,700,784
[illegible] 5,700,785
47 5,700,786
[illegible] 5,700,787
[illegible] 5,700,788
[illegible] 5,700,789
167 5,700,790
5,700,791
171 5,700,792
177 5,700,793
5,700,794
200 5,700,795
220 5,700,796
221 5,700,797
[illegible] 5,700,798
235.8 5,700,799
[illegible] 5,700,800
252 5,700,801
253 5,700,802
254 5,700,803
[illegible] 5,700,804
[illegible] 5,700,805
[illegible] [illegible]
[illegible] 5,700,807
292 [illegible]
300 5,700,809
307 5,700,810
314 5,700,811
317 5,700,812
5,700,813
321 5,700,814
324 5,700,815
[illegible] 5,700,816
[illegible] 5,700,817
[illegible] 5,700,818
[illegible] 5,700,819
[illegible] 5,700,820
374 5,700,821
[illegible] 5,700,822
5,700,823
383 5,700,824
397 5,700,825
5,700,826
414 5,700,827
419 5,700,828
426 5,700,830
[illegible] 5,700,831
[illegible] 5,700,832
510 5,700,833
[illegible] 5,700,834
[illegible] 5,700,835
[illegible] 5,700,836
[illegible] 5,700,837

575 5,700,838
618 5,700,839
628 [illegible]
[illegible] 5,700,841
721 5,700,842

CLASS 521
51 5,700,843
77 5,700,844
99 [illegible]
[illegible] [illegible]
159 5,700,847

CLASS 522
7 5,700,848
[illegible] 5,700,849
[illegible] [illegible]

CLASS 523
[illegible] 5,700,851
201 5,700,852
212 5,700,853

CLASS 524
176 5,700,856
290 5,700,857
297 5,700,858
314 5,700,859
317 5,700,860
[illegible] 5,700,861
403 5,700,862
[illegible] 5,700,863
506 5,700,865
[illegible] 5,700,866

[illegible] 5,700,867
[illegible] 5,700,868
731 5,700,869
837 5,700,870

CLASS 525
74 5,700,871
[illegible] 5,700,872
283 5,700,873
288 5,700,874
[illegible] 5,700,875
314 5,700,876
333.3 [illegible]
353 5,700,879
403 [illegible]
[illegible] [illegible]
[illegible]
[illegible] 5,700,884
534 5,700,885

CLASS 526
119 5,700,886
[illegible] 5,700,887
[illegible] [illegible]
247 [illegible]
272 5,700,890
301 5,700,891
[illegible] [illegible]
[illegible] 5,700,893
323.2 5,700,894
[illegible] 5,700,895
351 5,700,896

CLASS [illegible]
15 [illegible]
[illegible] [illegible]
37 [illegible]
335 [illegible]
[illegible] 5,700,901
373 5,700,902
5,700,903

CLASS 530
305 [illegible]
311 [illegible]
[illegible] [illegible]
5,700,907
[illegible]
326 [illegible]
[illegible] 5,700,910
350 5,700,911
5,700,912
351 5,700,913
412 5,700,914
413 5,700,915

CLASS 536
1.11 5,700,916
18.7 5,700,917
5,700,918
22.1 5,700,919
5,700,921
23.1 [illegible]
5,700,923
[illegible]
5,700,925
[illegible]

23.5 5,700,927
23.7 [illegible]
63 [illegible]
221 5,700,920

CLASS [illegible]
200 5,700,930
[illegible] 5,700,931
223 5,700,932
364 5,700,933
[illegible] 5,700,934

CLASS 544
139 5,700,935
276 [illegible]
317 5,700,937

CLASS 546
14 [illegible]
116 [illegible]
[illegible] [illegible]
122 5,700,941
[illegible] 5,700,942
[illegible] 5,700,943
327 [illegible]

CLASS 548
[illegible] 5,700,945
[illegible] [illegible]
[illegible] 5,700,947
531 5,700,948

CLASS 600
15 5,700,234

175 5,700,236

CLASS 602
27 5,700,237
[illegible] [illegible]

CLASS 604
2 [illegible]
22 [illegible]
93 5,700,241
[illegible] 5,700,242
[illegible] 5,700,243
132 [illegible]
145 5,700,245
[illegible] [illegible]
[illegible] [illegible]
[illegible] [illegible]
[illegible] [illegible]
[illegible]
264 [illegible]
280 5,700,252
[illegible] 5,700,253
[illegible] [illegible]
[illegible] 5,700,255
[illegible] 5,700,256
[illegible] 5,700,257

CLASS 606
1 [illegible]
14 5,700,259
15 [illegible]
41 5,700,261
[illegible] [illegible]
57 5,700,263

[illegible] [illegible]
[illegible] [illegible]
[illegible]
[illegible] 5,700,267
[illegible] [illegible]
[illegible] [illegible]
[illegible] [illegible]
143 5,700,271
144 5,700,272
[illegible] [illegible]
[illegible] 5,700,274
[illegible] 5,700,275
[illegible]
213 [illegible]
[illegible] [illegible]

CLASS 607
[illegible] [illegible]
[illegible]
[illegible] [illegible]
17 [illegible]
114 [illegible]

CLASS 623
1 [illegible]
[illegible]
5,700,287
7 5,700,288
[illegible] 5,700,289
17 [illegible]
[illegible]

CLASSIFICATION OF DESIGNS

D2— 610 [illegible]
639 [illegible]
869 [illegible]
[illegible] 387,889
[illegible] [illegible]
[illegible] [illegible]
[illegible] 387,891
960 [illegible]
[illegible] [illegible]
[illegible] 387,893
972 [illegible]
[illegible]
D3— 214 [illegible]
215 387,897
[illegible]
221 [illegible]
[illegible]
[illegible] [illegible]
271 [illegible]
273 387,903
[illegible]
281 [illegible]
[illegible] [illegible]
319 [illegible]
D4— 101 387,908
116 [illegible]
[illegible] 387,910
D6— 317 387,911
[illegible] 387,912
337 387,913
356 387,914
[illegible] 387,915
387,916
[illegible] 387,917
372 387,918
393 387,919
397 387,920
417 387,921
418 387,922
[illegible] 387,923
[illegible] 387,924
[illegible] 387,925
[illegible] 387,926
495 387,927
511 387,928
513 387,929
526 387,930
545 387,931
[illegible] 387,932
387,933
[illegible] 387,934
387,935
[illegible] 387,936
[illegible] 387,937
610 387,939
611 [illegible]

616 387,941
[illegible] 387,942
387,943
D7— [illegible] [illegible]
[illegible]
[illegible]
319 387,947
387,951
[illegible] [illegible]
[illegible] 387,949
551 [illegible]
[illegible] [illegible]
643 [illegible]
[illegible] [illegible]
[illegible] 387,955
387,956
[illegible] 387,957
[illegible]
[illegible] [illegible]
D8— [illegible] [illegible]
68 [illegible]
70 [illegible]
387,963
[illegible] [illegible]
[illegible] [illegible]
[illegible] [illegible]
[illegible] 387,967
107 [illegible]
[illegible] [illegible]
[illegible]
354 387,971
[illegible] [illegible]
[illegible] 387,972
377 387,973
[illegible] 387,974
D9— 346 387,976
[illegible] 387,977
415 387,979
[illegible]
[illegible] [illegible]
423 [illegible]
[illegible] [illegible]
[illegible] [illegible]
435 [illegible]
[illegible] [illegible]
[illegible] 387,988
517 [illegible]
519 [illegible]
387,991
521 387,992
[illegible] [illegible]
545 [illegible]
[illegible] [illegible]
D10— [illegible] [illegible]
30 387,997
[illegible]

[illegible]
[illegible]
[illegible] 388,001
[illegible]
46.1 [illegible]
91 [illegible]
92 388,004
[illegible] [illegible]
[illegible] [illegible]
114 [illegible]
[illegible] 388,008
388,009
D11— 26 [illegible]
40 [illegible]
[illegible] [illegible]
48 388,013
[illegible] [illegible]
[illegible] [illegible]
91 [illegible]
388,017
[illegible] [illegible]
[illegible]
[illegible]
[illegible]
[illegible] [illegible]
D12— 1 [illegible]
[illegible] [illegible]
111 388,025
114 [illegible]
129 [illegible]
136 [illegible]
[illegible]
142 388,030
143 [illegible]
[illegible] [illegible]
388,033
388,034
147 [illegible]
[illegible]
[illegible]
[illegible]
[illegible]
[illegible]
388,058
152 [illegible]
171 388,042
190 [illegible]
204 [illegible]
[illegible] [illegible]
[illegible]
211 [illegible]
328 [illegible]
404 [illegible]
[illegible] [illegible]
D13— 103 [illegible]
[illegible]

133 388,052
[illegible]
388,054
152 [illegible]
163 [illegible]
[illegible] [illegible]
D14— 102 [illegible]
106 [illegible]
114 [illegible]
[illegible]
388,065
[illegible]
[illegible]
[illegible]
114.3 [illegible]
[illegible]
[illegible]
[illegible]
[illegible]
115 [illegible]
[illegible] [illegible]
[illegible]
126 [illegible]
138 [illegible]
[illegible]
[illegible]
[illegible]
388,082
[illegible] [illegible]
[illegible] [illegible]
388,085
[illegible] 388,086
151 [illegible]
155 388,088
[illegible] [illegible]
[illegible]
388,090
388,091
[illegible] [illegible]
223 [illegible]
226 [illegible]
[illegible] [illegible]
388,096
[illegible]
[illegible]
[illegible]
[illegible] [illegible]
[illegible]
[illegible] [illegible]
D15— 127 [illegible]
D16— 134 [illegible]
202 [illegible]
[illegible]
208 [illegible]
[illegible]
217 [illegible]

[illegible]
231 388,111
306 [illegible]
309 388,113
388,114
[illegible] 388,115
[illegible] [illegible]
D17— 20 388,117
D19— 27 [illegible]
[illegible] [illegible]
60 [illegible]
[illegible] 388,121
D20— 7 [illegible]
[illegible] [illegible]
[illegible] 388,124
[illegible]
[illegible]
D21— 5 388,127
[illegible] [illegible]
23 388,129
[illegible] [illegible]
71 388,131
[illegible] [illegible]
82 [illegible]
86 [illegible]
[illegible] [illegible]
108 [illegible]
388,137
143 [illegible]
[illegible] [illegible]
[illegible]
[illegible] [illegible]
214 [illegible]
219 [illegible]
220 388,144
226 [illegible]
[illegible] [illegible]
240 388,147
244 [illegible]
D22— 108 [illegible]
118 [illegible]
120 [illegible]
142 [illegible]
147 [illegible]
D23— 209 [illegible]
238 388,155
388,156
388,157
[illegible]
295 [illegible]
297 [illegible]
314 [illegible]
356 [illegible]
[illegible] [illegible]
377 [illegible]
411 [illegible]

[illegible]
D24— 107 [illegible]
[illegible] [illegible]
133 [illegible]
[illegible]
[illegible]
[illegible] [illegible]
[illegible] [illegible]
[illegible]
215 [illegible]
[illegible] [illegible]
D25— 16 388,177
[illegible] [illegible]
[illegible] [illegible]
61 [illegible]
121 [illegible]
[illegible]
[illegible]
[illegible] [illegible]
[illegible]
[illegible]
[illegible]
[illegible]
[illegible]
127 [illegible]
133 [illegible]
134 [illegible]
[illegible] [illegible]
[illegible] [illegible]
D26— 9 [illegible]
27 [illegible]
28 [illegible]
[illegible]
37 [illegible]
[illegible]
[illegible] [illegible]
43 [illegible]
[illegible]
[illegible] [illegible]
54 388,208
[illegible] [illegible]
[illegible] [illegible]
[illegible]
71 [illegible]
[illegible] [illegible]
[illegible] [illegible]
388,215
[illegible]
[illegible]
[illegible] [illegible]
[illegible]
[illegible]
[illegible] [illegible]
112 [illegible]
145 [illegible]
153 [illegible]

CLASSIFICATION OF PATENTS

D99—	12	388,225	28	388,227		388,229		388,231	34	388,233
	17	388,226		388,228		388,230	30	388,232		388,234

CLASSIFICATION OF PLANTS

P.—	III	0,155		0,157	69.2	0,159	86.3	0,161		0,163
	54.1	0,156	56	0,158	86.2	0,160	86.4	0,162		

GEOGRAPHICAL INDEX OF RESIDENCE OF INVENTORS

(U.S. States, Territories and Armed Forces, the Commonwealth of Puerto Rico, and the Canal Zone)

Alabama	1	Kentucky	21	Oregon	41
Alaska	2	Louisiana	22	Pennsylvania	42
American Samoa	3	Maine	23	Puerto Rico	43
Arizona	4	Maryland	24	Rhode Island	44
Arkansas	5	Massachusetts	25	South Carolina	45
California	6	Michigan	26	South Dakota	46
Canal Zone	7	Minnesota	27	Tennessee	47
Colorado	8	Mississippi	28	Texas	48
Connecticut	9	Missouri	29	Utah	49
Delaware	10	Montana	30	Vermont	50
District of Columbia	11	Nebraska	31	Virginia	51
Florida	12	Nevada	32	Virgin Islands	52
Georgia	13	New Hampshire	33	Washington	53
Guam	14	New Jersey	34	West Virginia	54
Hawaii	15	New Mexico	35	Wisconsin	55
Idaho	16	New York	36	Wyoming	56
Illinois	17	North Carolina	37	U.S. Air Force	57
Indiana	18	North Dakota	38	U.S. Army	58
Iowa	19	Ohio	39	U.S. Navy	59
Kansas	20	Oklahoma	40		

(First number in listing denotes location according to above key. Refer to patent number in body of the Official Gazette to obtain details as to inventor name, location, etc.)

PATENTS

01 : 5,699,634
5,699,712
5,699,756
04 : 5,699,642
5,699,918
5,699,922
5,700,285
5,700,287
5,700,703
5,700,721
5,701,006
5,701,034
5,701,141
5,701,311
5,701,359
5,701,426
5,701,429
5,701,501
5,701,596
05 : 5,700,288
06 : 5,699,561
5,699,563
5,699,565
5,699,611
5,699,618
5,699,629
5,699,630
5,699,662
5,699,700
5,699,702
5,699,747
5,699,806
5,699,813
5,699,827
5,699,839
5,699,846
5,699,864
5,699,879
5,699,889
5,699,910
5,699,928
5,699,936
5,699,980
5,699,943
5,699,944
5,699,949
5,699,962
5,699,975
5,699,993
5,700,007
5,700,036
5,700,039
5,700,045
5,700,046
5,700,047
5,700,072
5,700,076
5,700,085
5,700,097
5,700,118
5,700,174
5,700,222
5,700,229
5,700,243
5,700,248
5,700,257
5,700,258
5,700,262
5,700,263
5,700,264
5,700,267
5,700,272
5,700,273
5,700,280
5,700,286
5,700,310
5,700,311
5,700,380
5,700,401
5,700,478
5,700,483
5,700,495
5,700,506
5,700,520
5,700,526
5,700,539
5,700,571
5,700,585
5,700,592
5,700,594
5,700,602
5,700,607
5,700,628
5,700,642
5,700,649
5,700,653
5,700,672
5,700,673
5,700,675
5,700,676
5,700,677
5,700,681
5,700,692
5,700,695
5,700,697
5,700,698
5,700,707
5,700,711
5,700,715
5,700,717
5,700,723
5,700,759
5,700,762
5,700,763
5,700,822
5,700,823
5,700,826
5,700,828
5,700,848
5,700,897
5,700,908
5,700,909
5,700,912
5,700,915
5,700,921
5,700,922
5,700,934
5,700,936
5,700,949
5,700,959
5,700,962
5,700,965
5,700,975
5,700,989
5,701,007
5,701,008
5,701,021
5,701,023
5,701,024
5,701,027
5,701,043
5,701,060
5,701,068
5,701,071
5,701,083
5,701,085
5,701,092
5,701,098
5,701,099
5,701,101
5,701,102
5,701,113
5,701,120
5,701,138
5,701,140
5,701,153
5,701,172
5,701,184
5,701,213
5,701,219
5,701,222
5,701,223
5,701,231
5,701,232
5,701,233
5,701,234
5,701,240
5,701,263
5,701,264
5,701,266
5,701,272
5,701,283
5,701,291
5,701,305
5,701,317
5,701,318
5,701,334
5,701,338
5,701,348
5,701,356
5,701,366
5,701,393
5,701,399
5,701,405
5,701,409
5,701,411
5,701,431
5,701,432
5,701,438
5,701,439
5,701,441
5,701,447
5,701,450
5,701,454
5,701,455
5,701,456
5,701,471
5,701,472
5,701,477
5,701,482
5,701,483
5,701,492
5,701,496
5,701,515
5,701,516
5,701,517
5,701,595
08 : 5,699,560
5,699,643
5,699,669
5,699,818
5,700,125
5,700,136
5,700,373
5,700,667
5,700,779
5,700,958
5,700,979
5,701,074
5,701,086
5,701,295
5,701,304
5,701,309
5,701,314
5,701,335
5,701,470
5,701,474
09 : 5,699,586
5,699,628
5,699,649
5,699,689
5,699,909
5,700,100
5,700,270
5,700,271
5,700,275
5,700,371
5,700,595
5,700,775
5,700,831
5,701,109
5,701,111
5,701,115
5,701,117
5,701,119
5,701,183
5,701,249
5,701,250
10 : 5,699,739
5,700,308
5,700,412
5,700,761
5,700,798
5,700,863
5,700,866
5,700,890
11 : 5,699,900
5,700,781
12 : 5,699,614
5,699,639
5,699,640
5,699,657
5,699,748
5,699,855
5,699,876
5,699,925
5,699,937
5,699,952
5,700,102
5,700,116
5,700,131
5,700,172
5,700,173
5,700,237
5,700,260
5,700,299
5,700,346
5,700,374
5,700,409
5,700,504
5,700,505
5,700,825
5,700,932
5,700,999
5,701,010
5,701,097
5,701,189
5,701,308
5,701,312
5,701,337
5,701,355
5,701,400
5,701,404
5,701,500

5,701,514
5,701,600
13 : 5,699,591
5,699,617
[illegible]
5,699,651
5,699,781
5,699,791
5,699,919
[illegible]
5,700,034
5,700,111
5,700,254
5,700,322
5,700,531
5,700,553
[illegible]
5,700,856
5,700,937
5,701,253
5,701,301
5,701,352
15 : 5,699,785
5,699,956
5,700,858
16 : 5,699,574
5,700,026
5,700,170
5,700,180
[illegible]
5,700,706
5,700,716
5,700,718
5,700,727
5,700,730
5,700,732
5,700,733
5,700,981
5,701,036
5,701,227
17 : 5,699,581
[illegible]
5,699,613
5,699,641
5,699,647
5,699,648
5,699,653
5,699,744
5,699,754
5,699,758
5,699,799
5,699,816
5,699,817
5,699,878
5,699,958
5,699,970
5,700,008
5,700,013
5,700,015
5,700,017
5,700,094
5,700,168
5,700,184
5,700,199
[illegible]
5,700,438
5,700,536
5,700,599
5,700,606
5,700,618
5,700,691
5,700,777
5,700,857
5,701,062
5,701,084
5,701,244
5,701,258
5,701,297
5,701,302
5,701,382
5,701,391
5,701,395
5,701,589
5,701,591
18 : 5,699,558
5,699,665
5,699,745
5,699,849
5,699,881
5,699,930
5,700,021
5,700,106
5,700,165
5,700,167
5,700,253
5,700,293
5,700,345
5,700,538
5,700,632
5,700,634
5,700,662
5,700,664
5,700,815

5,700,904
5,700,933
5,700,940
5,700,942
5,701,038
5,701,161
5,701,179
5,701,235
5,701,323
5,701,345
5,701,598
19 : 5,699,844
5,701,110
20 : 5,699,710
5,699,984
5,700,510
5,700,991
5,701,453
21 : 5,699,687
5,700,048
5,701,549
22 : 5,699,866
[illegible]
5,700,558
5,700,760
5,700,830
23 : 5,700,655
24 : 5,699,711
5,699,801
5,700,228
5,700,239
5,700,427
5,700,439
5,700,544
5,700,554
5,700,646
5,700,679
5,700,724
5,700,834
5,700,893
5,700,925
5,701,328
5,701,583
25 : 5,699,684
5,699,819
5,699,832
5,699,836
5,699,901
5,699,902
5,700,026
5,700,078
5,700,132
5,700,240
5,700,252
5,700,259
5,700,260
5,700,308
5,700,342
5,700,360
5,700,430
5,700,446
5,700,450
5,700,458
5,700,466
5,700,485
5,700,559
5,700,624
5,700,640
5,700,660
5,700,774
5,700,787
5,700,795
5,700,800
5,700,902
5,700,903
5,700,911
5,700,923
5,700,927
5,700,980
5,701,003
5,701,156
5,701,185
5,701,423
5,701,427
5,701,480
5,701,525
4,930,544
26 : 5,699,594
5,699,601
5,699,631
5,699,636
5,699,692
5,699,697
5,699,760
5,699,829
5,699,857
5,699,877
5,699,888
5,700,030
5,700,034
5,700,040
5,700,044
5,700,050

5,700,051
5,700,055
5,700,058
5,700,068
5,700,089
5,700,122
5,700,152
5,700,154
5,700,212
5,700,218
5,700,226
5,700,390
5,700,496
5,700,515
5,700,545
5,700,570
5,700,799
5,700,843
5,700,869
5,700,878
5,700,882
5,700,887
5,700,954
5,700,966
5,700,973
5,701,063
5,701,082
5,701,116
5,701,319
5,701,330
5,701,361
5,701,383
5,701,410
5,701,418
5,255,096
27 : 5,699,593
5,699,605
5,699,634
5,699,670
5,699,677
5,699,705
5,699,722
5,699,805
5,700,004
5,700,077
5,700,090
5,700,137
5,700,204
5,700,244
5,700,281
5,700,283
5,700,291
5,700,302
5,700,344
5,700,375
5,701,058
5,701,070
5,701,218
5,701,313
5,701,316
5,701,473
5,701,486
5,701,489
5,701,561
5,396,737
28 : 5,700,961
29 : 5,699,572
5,699,652
5,699,676
5,699,886
5,699,890
5,699,999
5,700,337
5,700,475
5,700,638
5,700,816
5,700,846
5,700,926
5,701,064
5,701,170
5,701,358
30 : 5,700,345
32 : 5,699,945
5,700,009
5,700,177
5,700,238
5,700,298
5,700,300
5,701,118
33 : 5,699,621
5,700,092
5,700,245
5,700,313
5,700,845
5,701,039
5,701,148
5,701,390
5,701,484
34 : 5,699,564
5,699,620
5,699,645
5,699,743
5,699,759

5,699,797
5,699,906
5,699,923
5,699,982
5,700,037
5,700,087
5,700,108
5,700,141
5,700,142
5,700,231
5,700,331
5,700,364
5,700,455
5,700,497
5,700,519
5,700,583
5,700,598
5,700,650
5,700,657
5,700,669
5,700,682
5,700,696
5,700,768
5,700,773
5,700,802
5,700,804
5,700,806
5,700,811
5,700,844
5,700,916
5,700,917
5,700,987
5,701,014
5,701,133
5,701,136
5,701,152
5,701,168
5,701,292
5,701,327
5,701,340
5,701,389
35 : 5,700,444
5,701,200
36 : Re.35,698
5,699,584
5,699,622
5,699,671
5,699,679
5,699,683
5,699,706
5,699,708
5,699,720
5,699,725
5,699,738
5,699,793
5,699,808
5,699,842
5,699,853
5,699,920
5,699,934
5,699,961
5,699,965
5,700,059
5,700,083
5,701,088
5,700,107
5,700,120
5,700,146
5,700,158
5,700,178
5,700,213
5,700,214
5,700,216
5,700,230
5,700,236
5,700,246
5,700,279
5,700,289
5,700,292
5,700,297
5,700,332
5,700,355
5,700,356
5,700,398
5,700,403
5,700,411
5,700,413
5,700,447
5,700,461
5,700,465
5,700,474
[illegible]
5,700,489
5,700,524
5,700,540
5,700,549
5,700,564
5,700,577
5,700,581
5,700,608
5,700,611
5,700,615
5,700,623

5,700,631
5,700,656
5,700,786
5,700,792
5,700,796
5,700,906
5,700,930
5,700,994
5,701,005
5,701,015
5,701,059
5,701,094
5,701,114
5,701,151
5,701,155
5,701,171
5,701,175
5,701,178
5,701,226
5,701,256
5,701,365
5,701,401
5,701,430
5,701,435
5,701,446
5,701,451
5,701,479
5,701,536
5,701,540
5,701,550
5,701,552
5,701,557
5,701,564
5,701,565
5,701,567
5,701,572
5,701,579
37 : 5,699,659
5,699,681
[illegible]
5,699,707
5,699,751
5,699,753
5,699,796
5,699,870
5,699,927
5,699,942
5,700,019
5,700,042
5,700,060
5,700,156
5,700,183
5,700,202
5,700,211
5,700,284
5,700,329
5,700,394
5,700,460
5,700,532
5,700,977
5,700,978
5,701,298
5,701,329
38 : 5,699,983
39 : 5,699,576
5,699,719
5,699,828
5,699,883
5,699,911
5,699,935
5,699,966
5,699,981
5,699,990
5,700,028
5,700,138
5,700,255
5,700,261
5,700,306
5,700,312
5,700,323
5,700,352
5,700,353
5,700,354
5,700,365
5,700,386
5,700,451
5,700,452
5,700,487
5,700,493
5,700,513
5,700,543
5,700,555
5,700,564
5,700,574
5,700,578
5,700,590
5,700,671
5,700,770
5,700,771
5,700,782
5,700,812
5,700,813
[illegible]

5,700,955
5,701,181
5,701,211
5,701,452
40 : 5,699,577
5,699,860
5,700,140
5,700,189
5,700,318
5,701,511
41 : 5,699,820
5,699,826
5,700,145
5,700,315
5,700,317
5,700,383
5,700,587
5,700,851
5,701,073
5,701,154
5,701,420
5,701,464
5,701,476
5,701,503
5,701,504
5,701,508
42 : 5,699,571
5,699,575
5,699,626
5,699,764
5,699,803
5,699,845
5,699,851
5,699,924
5,699,933
5,699,989
5,699,995
5,700,033
5,700,112
5,700,113
5,700,143
5,700,151
5,700,164
5,700,182
5,700,186
5,700,201
5,700,277
5,700,282
5,700,327
5,700,436
5,700,507
5,700,523
5,700,525
5,700,690
5,700,725
5,700,785
5,700,793
5,700,797
5,700,821
5,700,841
5,700,847
5,700,873
5,700,905
5,700,928
5,700,939
5,700,943
5,700,983
5,701,081
5,701,123
5,701,186
5,701,236
5,701,578
44 : 5,699,780
5,700,582
5,701,277
5,701,398
45 : 5,699,650
5,699,821
5,700,065
5,700,066
5,700,406
5,701,075
5,701,125
5,701,422
46 : 5,699,784
47 : 5,699,557
5,699,701
5,699,704
5,699,787
5,699,967
5,700,038
5,700,341
5,700,457
5,700,654
5,701,089
5,701,370
48 : Re.35,696
5,699,589
5,699,776
5,699,792
5,699,795
5,699,822
5,699,838

5,699,858
5,699,868
5,699,897
5,699,913
5,699,941
5,699,954
5,699,996
5,700,075
5,700,081
5,700,147
5,700,149
5,700,161
5,700,200
5,700,208
5,700,274
5,700,319
5,700,368
5,700,402
5,700,476
5,700,477
5,700,573
5,700,687
5,700,701
5,700,753

5,700,765
5,700,767
5,700,794
5,700,835
5,700,846
5,700,871
5,700,885
5,700,934
5,700,950
5,700,969
5,701,127
5,701,143
5,701,270
5,701,275
5,701,307
5,701,326
5,701,347
5,701,372
5,701,415
5,701,421
5,701,433
5,701,448
5,701,458
5,701,465

5,701,488
5,701,495
5,701,498
5,701,507
5,701,510
49 : 5,699,983
5,700,029
5,700,053
5,700,148
5,700,250
5,700,268
5,700,464
5,700,778
5,700,953
5,700,974
5,701,404
5,701,459
50 : 5,699,570
5,700,176
5,701,176
51 : 5,699,644
5,699,695
5,699,729
5,699,752

5,699,779
5,699,811
5,699,867
5,700,764
5,701,046
5,701,122
5,701,419
53 : 5,699,599
5,699,794
5,699,798
5,699,987
5,700,022
5,700,181
5,700,190
5,700,265
5,700,266
5,700,303
5,700,347
5,700,511
5,700,636
5,700,643
5,700,658
5,700,683
5,700,995

5,701,132
5,701,137
5,701,142
5,701,390
5,701,417
5,701,424
5,701,460
5,701,461
5,701,462
5,701,469
5,701,491
5,701,499
54 : 5,700,748
[illegible]
55 : 5,699,609
5,699,632
5,699,750
5,699,763
5,699,739
5,699,790
5,699,825
5,699,863
5,699,875
5,701,018

5,700,109
5,701,185
5,700,241
5,700,257
5,700,462
5,700,316
5,700,522
5,700,644
5,700,645
5,700,790
5,700,642
5,700,872
5,700,983
5,701,032
[illegible]
5,701,130
5,701,180
5,701,350
5,701,388
5,701,416
56 : 5,699,894
5,700,407

DESIGN PATENTS

01 : 388,148
04 : 387,978
388,149
06 : 387,887
387,890
387,896
387,898
387,899
387,920
387,928
387,929
387,934
387,942
387,949
387,965
387,969
388,001
388,015
388,016
388,017
388,027
388,042
388,050
388,059
388,065
388,074
388,117
388,129
388,133
388,134
388,147
388,158
388,164
388,168
388,199
388,222

388,224
388,229
08 : 387,903
388,064
388,150
09 : 387,998
388,086
388,121
388,205
388,206
388,209
12 : 387,923
387,933
387,959
388,053
388,091
388,094
388,114
388,169
388,172
13 : 387,954
388,131
388,177
16 : 388,174
17 : 387,908
387,915
387,916
387,952
387,962
387,963
387,986
388,018
388,019
388,020
388,021
388,078

388,079
388,080
388,081
388,082
388,144
388,196
18 : 387,940
387,953
388,007
388,156
388,225
388,227
388,228
19 : 388,043
20 : 388,160
21 : 387,932
388,142
22 : 388,088
24 : 388,201
25 : 387,943
387,973
388,162
388,163
388,170
26 : 387,913
387,922
387,971
388,146
388,161
388,208
388,234
27 : 387,988
388,013
388,024
388,194
28 : 388,112

30 : 387,967
387,987
387,992
388,023
32 : 388,127
33 : 387,894
34 : 387,888
387,889
387,936
387,937
387,939
388,018
388,061
388,085
388,087
388,176
35 : 388,011
388,165
36 : 387,911
387,941
387,955
387,972
387,982
387,993
387,995
388,062
388,075
388,076
388,092
388,113
388,213
388,214
388,223
37 : 387,904
387,919
387,921

387,924
387,925
39 : 387,886
387,970
388,028
388,029
388,030
388,031
388,032
388,037
388,038
388,039
388,049
388,058
388,132
388,154
388,157
388,212
388,230
388,231
41 : 387,885
387,891
387,898
387,938
387,944
387,945
387,946
387,966
388,108
388,115
388,153
42 : 387,968
387,979
387,984
388,125
388,151

388,167
388,180
388,186
388,187
388,188
388,189
388,190
[illegible]
388,232
44 : 387,986
387,983
45 : 388,197
47 : 388,026
388,128
48 : 387,907
388,002
388,005
388,012
388,048
388,107
388,122
51 : 387,926
388,198
53 : 387,893
387,897
387,901
387,957
387,958
388,041
388,191
55 : 387,935
387,974
387,981

PLANT PATENTS

04 : 0,155 | 29 : 0,156 | 39 : 0,159 | 48 : 0,157

U.S. GOVERNMENT PRINTING OFFICE : 1997 O - 179-254 : QL 3

VOL
12 05

ISS
4

DE
2 3

1997

UMI

CHANGE OF ADDRESS FORM

NAME – FIRST, LAST

COMPANY NAME OR ADDITIONAL ADDRESS LINE

STREET ADDRESS

CITY

STATE

ZIP CODE

PLEASE PRINT OR TYPE

(or) COUNTRY

Mail this form to: NEW ADDRESS

Superintendent of Documents
Government Printing Office SSOM
Washington, D.C. 20402

Attach last subscription label here.

Superintendent of Documents Subscription Order Form

Order Processing Code:
*** 5606**

❑ **YES,** enter _____ subscription(s) to **Official Gazette of the U.S. Patent and Trademark Office: Patents** (OG) for $549 per year ($686.25 foreign).

The total cost of my order is $_____. Price includes regular shipping and handling and is subject to change. International customers please add 25%.

Company or personal name (Please type or print)

Additional address/attention line

Street address

City, State, Zip code

Daytime phone including area code

Purchase order number (optional)

For privacy protection, check the box below:
❑ Do not make my name available to other mailers

Check method of payment:
❑ Check payable to Superintendent of Documents
❑ GPO Deposit Account ☐☐☐☐☐☐☐ – ☐
❑ VISA ❑ MasterCard
☐☐☐☐☐☐☐☐☐☐☐☐☐☐☐☐☐☐☐☐
☐☐☐☐ (expiration date)

Authorizing signature 4/95

Mail To: Superintendent of Documents
P.O. Box 371954, Pittsburgh, PA 15250–7954

Important: Please be sure to include this completed order form with your remittance.

Charge your order. It's easy!

VISA

Fax your orders (202) 512–2250

Phone your orders (202) 512–1800

Thank you for your order!

Superintendent of Documents Subscription Order Form

Order Processing Code:
*** 5606**

❑ **YES,** enter _____ subscription(s) to **Official Gazette of the U.S. Patent and Trademark Office: Patents** (OG) for $549 per year ($686.25 foreign).

The total cost of my order is $______. Price includes regular shipping and handling and is subject to change. International customers please add 25%.

____
Company or personal name (Please type or print)

____
Additional address/attention line

____
Street address

____
City, State, Zip code

____
Daytime phone including area code

____
Purchase order number (optional)

Charge your order. It's easy!

VISA

For privacy protection, check the box below:
❑ Do not make my name available to other mailers

Fax your orders (202) 512–2250

Check method of payment:
❑ Check payable to Superintendent of Documents
❑ GPO Deposit Account ☐☐☐☐☐☐☐ – ☐
❑ VISA ❑ MasterCard
☐☐☐☐☐☐☐☐☐☐☐☐☐☐☐☐☐☐☐☐
☐☐☐☐ (expiration date)

Phone your orders (202) 512–1800

Thank you for your order!

____
Authorizing signature 4/95

Mail To: Superintendent of Documents
P.O. Box 371954, Pittsburgh, PA 15250–7954

Important: Please be sure to include this completed order form with your remittance.

VOL 1205

ISS 4

DE 23

1997

UMI

Superintendent of Documents **Subscription** Order Form

Order Processing Code:
*** 5606**

☐ **YES,** enter _____ subscription(s) to **Official Gazette of the U.S. Patent and Trademark Office: Patents** (OG) for $549 per year ($686.25 foreign).

The total cost of my order is $_____. Price includes regular shipping and handling and is subject to change. International customers please add 25%.

Company or personal name (Please type or print)

Additional address/attention line

Street address

City, State, Zip code

Daytime phone including area code

Purchase order number (optional)

For privacy protection, check the box below:
☐ Do not make my name available to other mailers

Check method of payment:
☐ Check payable to Superintendent of Documents
☐ GPO Deposit Account ☐☐☐☐☐☐☐ – ☐
☐ VISA ☐ MasterCard
☐☐☐☐☐☐☐☐☐☐☐☐☐☐☐☐☐☐☐☐
☐☐☐☐ (expiration date)

Authorizing signature 4/95

Charge your order. It's easy!

VISA

Fax your orders (202) 512–2250

Phone your orders (202) 512–1800

Thank you for your order!

Mail To: Superintendent of Documents
P.O. Box 371954, Pittsburgh, PA 15250–7954

Important: Please be sure to include this completed order form with your remittance.

VOL
12 05
ISS
4
DE
2 3
1997
UMI

Superintendent of Documents **Subscription** Order Form

Order Processing Code:
*** 5606**

❑ **YES,** enter _____ subscription(s) to **Official Gazette of the U.S. Patent and Trademark Office: Patents** (OG) for $549 per year ($686.25 foreign).

The total cost of my order is $______. Price includes regular shipping and handling and is subject to change. International customers please add 25%.

Company or personal name (Please type or print)

Additional address/attention line

Street address

City, State, Zip code

Daytime phone including area code

Purchase order number (optional)

For privacy protection, check the box below:
❑ Do not make my name available to other mailers

Check method of payment:
❑ Check payable to Superintendent of Documents
❑ GPO Deposit Account ☐☐☐☐☐☐☐ – ☐
❑ VISA ❑ MasterCard

☐☐☐☐☐☐☐☐☐☐☐☐☐☐☐☐☐☐☐☐

☐☐☐☐ (expiration date)

Authorizing signature 4/95

Mail To: Superintendent of Documents
P.O. Box 371954, Pittsburgh, PA 15250-7954

Important: Please be sure to include this completed order form with your remittance.

Charge your order. It's easy!

Fax your orders (202) 512-2250

Phone your orders (202) 512-1800

Thank you for your order!

VOL
12 05

ISS
5

DE
30

1997

UMI

Route to:

U.S.
DEPARTMENT
OF COMMERCE

Patent
and
Trademark
Office

Vol. 1205 Number 5

OFFICIAL GAZETTE

of the
UNITED STATES PATENT AND TRADEMARK OFFICE

PATENTS

December [illegible]

PUBLISHED WEEKLY BY AUTHORITY OF CONGRESS

VOL 1205 ISS 5 DE 30 1997 UMI

OFFICIAL GAZETTE of the UNITED STATES PATENT AND TRADEMARK OFFICE

December 30, 1997 Volume 1205 Number 5

CONTENTS

The following are mailed under direction of the Superintendent of Documents, Government Printing Office, Washington, D.C. 20402, to whom all subscriptions should be made payable and all communications addressed. VISA or MasterCard may be used for telephone orders, (202) 512-1800.

THE OFFICIAL GAZETTE (PATENT SECTION), issued weekly. Stock No. 703-033-00000-8
THE OFFICIAL GAZETTE (TRADEMARK SECTION), issued weekly. Stock No. 703-034-00000-4
PATENT AND TRADEMARK OFFICE NOTICES, issued weekly. Stock No. 703-035-00000-1
GENERAL INFORMATION concerning PATENTS. Stock No. 003-004-00661-7

COPIES OF PATENTS are furnished by the Patent and Trademark Office at $3.00 each; PLANT PATENTS in color, $12.00 each; copies of TRADEMARKS at $3.00 each. Address orders to the Commissioner of Patents and Trademarks, Washington, D.C. 20231.

Printing authorized by Section 11(a)3 of Title 35, U.S.P.T.O.

For sale by the U.S. Government Printing Office
Superintendent of Documents, Mail Stop: SSOP; Washington, DC 20402–9328

179–255 O.G.–97–1: QL3

PATENT AND TRADEMARK OFFICE NOTICES

Patent Cooperation Treaty (PCT) Information

For information concerning PCT member countries, see the notice appearing in the *Official Gazette* at 1205 O.G. 4, on December 2, 1997.

For use of the European Patent Office as an International Searching Authority for international applications filed in the United States Receiving Office, see the notice appearing in the *Official Gazette* at 1022 O.G. 52, on September 28, 1982.

For use of the European Patent Office as an International Preliminary Examining Authority for international applications filed in the United States Receiving Office, see the notices appearing in the *Official Gazette* at 1080 O.G. 2, on July 7, 1987, and at 1091 O.G. 2, on June 7, 1988. There is no longer a limit on the number of such international applications accepted for international preliminary examination by the European Patent Office; see the notice appearing at 1116 O.G. 32, on July 17, 1990.

The search fee of the European Patent Office was increased, effective January 1, 1998, and was announced in the *Official Gazette* at 1205 O.G. 3, on December 2, 1997.

International fees were changed, effective on May 1, 1997, due to a change in the exchange rate of the U.S. dollar with regard to the Swiss franc, and were announced in the *Official Gazette* at 1197 O.G. 69, on April 22, 1997. The basic fee and the designation fee were further changed effective January 1, 1998 and were announced in the *Official Gazette* at 1205 O.G. 3, on December 2, 1997.

Certain domestic PCT fees and charges for International Search and Preliminary Examination were changed, effective October 1, 1997, and were announced in the *Official Gazette* at 1201 O.G. 63, on August 19, 1997.

The schedule of PCT fees (in U.S. dollars), effective January 1, 1998, is as follows:

International Application (PCT Chapter I) fees:	
Transmittal fee	240.00
Search Fee	
U.S. Patent and Trademark Office (USPTO) as International Searching Authority (ISA)	
— No corresponding prior U.S. national application filed under 35 U.S.C. 111(a)	700.00
— Corresponding prior U.S. national application filed under 35 U.S.C. 111(a)	450.00
— Supplemental search fee, per additional invention (payable only upon invitation)	210.00
European Patent Office as ISA	1250.00
International fees	
Basic fee	455.00
Basic supplemental fee (for each page over 30)	10.00
Designation fee per country or region	
— For the first 11 national or regional offices designated	105.00
— For each designation in excess of 11 offices	No Charge
Precautionary designation fee and confirmation fee for each precautionary designation confirmed (PCT Rule 15.5)	
— Designation fee	105.00
— Confirmation fee	52.50
International Application (PCT Chapter II) fees associated with filing a Demand for Preliminary Examination:	
Handling fee	162.00
Preliminary examination fee	
USPTO as International Preliminary Examining Authority (IPEA)	
— USPTO was ISA in PCT Chapter I	490.00
— Additional examination fee, per additional invention (payable only upon invitation)	140.00
— USPTO was not ISA in PCT Chapter I	750.00
— Additional examination fee, per additional invention (payable only upon invitation)	270.00

U.S. National Stage Fees	Small Entity	Regular
Basic National fee		
USPTO was IPEA		
— All claims presented satisfied provisions of PCT Article 33(2) to (4)	49.00	98.00
— All claims presented did not satisfy provisions of PCT Article 33(2) to (4)	360.00	720.00
USPTO was ISA but not IPEA	395.00	790.00
USPTO was neither ISA nor IPEA		
— Search report has not been prepared by the European Patent Office or the Japanese Patent Office	535.00	1070.00
— Search report has been prepared by the European Patent Office or the Japanese Patent Office	465.00	930.00
Other National fees		
— For each independent claim in excess of 3	41.00	82.00
— For each claim in excess of 20.	11.00	22.00
— For each application containing a multiple dependent claim	135.00	270.00
— Surcharge for filing oath or declaration after the time limit applicable under PCT Article 22 or 39(1)	65.00	130.00
— Processing fee for filing English translation after the time limit applicable under PCT Article 22 or 39(1)	130.00	130.00

Nov. 10, 1997

BRUCE A. LEHMAN
Assistant Secretary of Commerce and Commissioner of Patents and Trademarks

---

Notice of Maintenance Fees Payable

Title 37 Code of Federal Regulations (CFR), Section 1.362(d) provides that maintenance fees may be paid without surcharge for the six-month period beginning 3, 7, and 11 years after the date of issue of patents based on applications filed on or after Dec. 12, 1980. An additional six-month grace period is provided by 35 U.S.C. 41(b) and 37 CFR 1.362(e) for payment of the maintenance fee with the surcharge set forth in 37 CFR 1.20(h), as amended effective Dec. 16, 1991. If the maintenance fee is not paid in the patent requiring such payment the patent will expire on the 4th, 8th, or 12th anniversary of the grant.

Attention is drawn to the patents which were issued on December 29, 1994 for which maintenance fees due at 3 years

and six months may now be paid. The patents have patent numbers within the following ranges:

Utility Patents 5,375,261 through 5,377,358
Reissue Patents based on the above identified patents.

Attention is drawn to the patents which were issued on December 25, 1990 for which maintenance fees due at 7 years and six months may now be paid. The patents have patent numbers within the following ranges:

Utility Patents 4,979,236 through 4,980,926
Reissue Patents based on the above identified patents.

Attention is drawn to the patents which were issued on December 23, 1986 for which maintenance fees due at 11 years and six months may now be paid. The patents have patent numbers within the following ranges:

Utility Patents 4,630,317 through 4,631,751
Reissue Patents based on the above identified patents.

No maintenance fees are required for design or plant patents.

Payments of maintenance fees in patents should be directed to "Commissioner of Patents and Trademarks, Box M. Fee, Washington, D.C. 20231."

For patents based on applications filed on or after Dec. 12, 1980, but before Aug. 27, 1982, patent owners must establish small entity status according to 37 CFR 1.27 if they have not done so and if they wish to pay the small entity amount.

The current amounts of the maintenance fees due at 3 years and six months, 7 years and six months, and 11 years and six months are set forth in 37 CFR 1.20(e)-(g), as amended Oct. 1, 1997, which are reproduced below:

37 CFR § 1.20 Post-issuance fees

(e) For maintaining an original or reissue patent, except a design or plant patent, based on an application filed on or after Dec. 12, 1980, in force beyond 4 years; the fee is due by three years and six months after the original grant:

By a small entity (§ 1.9(f)) $525.00
By other than a small entity $1,050.00

(f) For maintaining an original or reissue patent, except a design or plant patent, based on an application filed on or after Dec. 12, 1980 in force beyond 8 years; the fee is due by seven years and six months after the original grant:

By a small entity (§ 1.9(f)) $1,050.00
By other than a small entity $2,100.00

(g) For maintaining an original or reissue patent, except a design or plant patent, based on applications filed on or after Dec. 12, 1980 in force beyond 12 years; the fee is due by eleven years and six months after the original grant:

By a small entity (§ 1.9(f)) $1,580.00
By other than a small entity $3,160.00

The amount of the surcharge for paying the maintenance fee during the grace period or after expiration of the patent are set forth in 37 CFR 1.20(h), and (i) which are reproduced below:

(h) Surcharge for paying a maintenance fee during the 6 month grace period following the expiration of three years and six months, seven years and six months, and eleven years and six months after the date of the original grant of a patent based on an application filed on or after Dec. 12, 1980:

By a small entity (§ 1.9(f)) $65.00
By other than a small entity $130.00

(i) Surcharge for accepting a maintenance fee after expiration of a patent for non-timely payment of a maintenance fee where the delay is shown to the satisfaction of the Commissioner to have been:

(1) unavoidable $700.00
(2) unintentional $1,640.00

Notice of Expiration of Patents Due to Failure to Pay Maintenance Fee

35 U.S.C. 41 and 37 CFR 1.362(g) provide that if the required maintenance fee and any applicable surcharge are not paid in a patent requiring such payment, the patent will expire at the end of the 4th, 8th or 12th anniversary of the grant of the patent depending on the first maintenance fee which was not paid.

According to the records of the Office, the patents listed below have expired due to failure to pay the required maintenance fee and any applicable surcharge.

PATENTS WHICH EXPIRED October 22, 1997 DUE TO FAILURE TO PAY MAINTENANCE FEES

Patent Number	Serial Number	Issue Date
Re. 33,123	07/110,375	12/05/89
(4,548,449)	(06/567,186)	(10/22/85)
Re. 34,157	07/774,024	01/05/93
(4,874,604)	(07/213,566)	(10/17/89)
Re. 34,321	07/776,083	07/20/93
(4,874,357)	(07/329,294)	(10/17/89)
4,547,909	06/552,999	10/22/85
4,547,911	06/557,592	10/22/85
4,547,931	06/538,782	10/22/85
4,547,937	06/529,501	10/22/85
4,547,939	06/599,222	10/22/85
4,547,942	06/483,439	10/22/85
4,547,951	06/484,704	10/22/85
4,547,952	06/564,608	10/22/85
4,547,955	06/380,814	10/22/85
4,547,956	06/479,579	10/22/85
4,547,959	06/468,149	10/22/85
4,547,964	06/519,171	10/22/85
4,547,968	06/608,647	10/22/85
4,547,970	06/637,309	10/22/85
4,547,972	06/527,907	10/22/85
4,547,981	06/604,674	10/22/85
4,547,982	06/459,106	10/22/85
4,547,987	06/598,981	10/22/85
4,547,994	06/561,247	10/22/85
4,547,997	06/609,309	10/22/85
4,548,006	06/650,582	10/22/85
4,548,011	06/555,440	10/22/85
4,548,012	06/570,422	10/22/85
4,548,017	06/573,148	10/22/85
4,548,021	06/501,008	10/22/85
4,548,023	06/223,931	10/22/85
4,548,029	06/545,966	10/22/85
4,548,033	06/608,354	10/22/85
4,548,042	06/596,256	10/22/85
4,548,045	06/595,077	10/22/85
4,548,049	06/638,972	10/22/85
4,548,057	06/457,369	10/22/85
4,548,062	06/433,657	10/22/85
4,548,070	06/540,688	10/22/85
4,548,078	06/634,088	10/22/85
4,548,088	06/562,396	10/22/85
4,548,092	06/465,635	10/22/85
4,548,101	06/465,796	10/22/85
4,548,103	06/249,946	10/22/85
4,548,106	06/593,263	10/22/85
4,548,111	06/636,935	10/22/85
4,548,112	06/632,941	10/22/85
4,548,116	06/513,014	10/22/85
4,548,119	06/451,880	10/22/85
4,548,124	06/581,624	10/22/85
4,548,132	06/507,171	10/22/85
4,548,133	06/637,322	10/22/85
4,548,134	06/580,392	10/22/85
4,548,138	06/613,267	10/22/85

Patent Number	Serial Number	Issue Date
4,548,143	06/566,656	10/22/85
4,548,145	06/635,127	10/22/85
4,548,149	06/548,655	10/22/85
4,548,154	06/628,468	10/22/85
4,548,156	06/570,242	10/22/85
4,548,164	06/696,094	10/22/85
4,548,166	06/689,467	10/22/85
4,548,167	06/645,164	10/22/85
4,548,168	06/596,668	10/22/85
4,548,182	06/598,797	10/22/85
4,548,196	06/428,923	10/22/85
4,548,205	06/436,953	10/22/85
4,548,219	06/475,234	10/22/85
4,548,221	06/575,053	10/22/85
4,548,222	06/577,820	10/22/85
4,548,248	06/583,865	10/22/85
4,548,253	06/525,992	10/22/85
4,548,257	06/617,760	10/22/85
4,548,260	06/474,521	10/22/85
4,548,262	06/654,236	10/22/85
4,548,263	06/589,356	10/22/85
4,548,265	06/514,013	10/22/85
4,548,267	06/556,205	10/22/85
4,548,270	06/539,518	10/22/85
4,548,274	06/548,958	10/22/85
4,548,287	06/518,632	10/22/85
4,548,297	06/550,277	10/22/85
4,548,299	06/486,970	10/22/85
4,548,301	06/552,494	10/22/85
4,548,302	06/556,519	10/22/85
4,548,306	06/605,246	10/22/85
4,548,313	06/495,470	10/22/85
4,548,329	06/641,392	10/22/85
4,548,332	06/688,002	10/22/85
4,548,333	06/676,871	10/22/85
4,548,337	06/501,278	10/22/85
4,548,338	06/545,536	10/22/85
4,548,339	06/598,032	10/22/85
4,548,343	06/510,916	10/22/85
4,548,354	06/593,386	10/22/85
4,548,359	06/500,527	10/22/85
4,548,360	06/613,741	10/22/85
4,548,368	06/526,476	10/22/85
4,548,383	06/582,741	10/22/85
4,548,386	06/523,633	10/22/85
4,548,392	06/494,784	10/22/85
4,548,393	06/569,415	10/22/85
4,548,401	06/507,911	10/22/85
4,548,404	06/595,925	10/22/85
4,548,407	06/480,583	10/22/85
4,548,415	06/565,580	10/22/85
4,548,418	06/505,988	10/22/85
4,548,421	06/516,127	10/22/85
4,548,424	06/541,600	10/22/85
4,548,425	06/563,130	10/22/85
4,548,427	06/313,161	10/22/85
4,548,437	06/620,625	10/22/85
4,548,447	06/597,244	10/22/85
4,548,450	06/614,500	10/22/85
4,548,452	06/509,003	10/22/85
4,548,454	06/450,297	10/22/85
4,548,456	06/451,905	10/22/85
4,548,461	06/562,937	10/22/85
4,548,463	06/579,635	10/22/85
4,548,469	06/618,160	10/22/85
4,548,471	06/541,534	10/22/85
4,548,473	06/493,850	10/22/85
4,548,475	06/559,762	10/22/85
4,548,479	06/481,438	10/22/85
4,548,480	06/459,242	10/22/85
4,548,491	06/513,882	10/22/85
4,548,497	06/422,635	10/22/85
4,548,499	06/470,282	10/22/85
4,548,501	06/395,524	10/22/85
4,548,505	06/369,767	10/22/85
4,548,508	06/569,475	10/22/85
4,548,512	06/543,033	10/22/85
4,548,514	06/584,339	10/22/85
4,548,518	06/563,565	10/22/85
4,548,534	06/481,276	10/22/85
4,548,536	06/442,659	10/22/85
4,548,539	06/564,528	10/22/85
4,548,553	06/653,605	10/22/85
4,548,557	06/504,992	10/22/85
4,548,566	06/613,083	10/22/85
4,548,567	06/437,310	10/22/85
4,548,575	06/620,264	10/22/85
4,548,577	06/485,618	10/22/85
4,548,580	06/445,439	10/22/85
4,548,581	06/608,396	10/22/85
4,548,585	06/574,006	10/22/85
4,548,616	06/620,656	10/22/85
4,548,617	06/522,736	10/22/85
4,548,618	06/518,587	10/22/85
4,548,619	06/659,925	10/22/85
4,548,632	06/660,486	10/22/85
4,548,642	06/593,941	10/22/85
4,548,647	06/607,339	10/22/85
4,548,651	06/682,818	10/22/85
4,548,652	06/674,942	10/22/85
4,548,657	06/387,829	10/22/85
4,548,662	06/693,707	10/22/85
4,548,668	06/456,959	10/22/85
4,548,685	06/643,451	10/22/85
4,548,691	06/584,639	10/22/85
4,548,700	06/561,475	10/22/85
4,548,701	06/563,113	10/22/85
4,548,702	06/583,320	10/22/85
4,548,705	06/645,920	10/22/85
4,548,714	06/540,489	10/22/85
4,548,715	06/298,975	10/22/85
4,548,716	06/634,304	10/22/85
4,548,719	06/483,648	10/22/85
4,548,722	06/670,520	10/22/85
4,548,723	06/656,042	10/22/85
4,548,729	06/601,475	10/22/85
4,548,731	06/494,032	10/22/85
4,548,732	06/601,538	10/22/85
4,548,734	06/460,772	10/22/85
4,548,735	06/454,241	10/22/85
4,548,737	06/597,389	10/22/85
4,548,752	06/535,252	10/22/85
4,548,762	06/463,993	10/22/85
4,548,764	06/636,227	10/22/85
4,548,771	06/574,829	10/22/85
4,548,790	06/517,475	10/22/85
4,548,816	06/623,177	10/22/85
4,548,820	06/516,946	10/22/85
4,548,823	06/589,628	10/22/85
4,548,824	06/490,972	10/22/85
4,548,828	06/636,993	10/22/85
4,548,830	06/568,092	10/22/85
4,548,837	06/515,057	10/22/85
4,548,852	06/490,971	10/22/85
4,548,865	06/690,704	10/22/85
4,548,868	06/688,425	10/22/85
4,548,874	06/676,340	10/22/85
4,548,877	06/612,951	10/22/85
4,548,879	06/612,184	10/22/85
4,548,884	06/612,862	10/22/85
4,548,885	06/664,427	10/22/85
4,548,893	06/609,163	10/22/85
4,548,895	06/586,897	10/22/85
4,548,897	06/615,615	10/22/85
4,548,899	06/667,465	10/22/85
4,548,900	06/496,506	10/22/85
4,548,904	06/446,579	10/22/85
4,548,909	06/395,078	10/22/85
4,548,911	06/661,945	10/22/85
4,548,912	06/494,609	10/22/85
4,548,922	06/501,187	10/22/85
4,548,926	06/618,127	10/22/85
4,548,932	06/637,620	10/22/85
4,548,938	06/703,233	10/22/85
4,548,939	06/656,561	10/22/85
4,548,943	06/609,313	10/22/85

Patent Number	Serial Number	Issue Date
4,548,945	06/534,233	10/22/85
4,548,950	06/501,396	10/22/85
4,548,955	06/704,884	10/22/85
4,548,958	06/664,913	10/22/85
4,548,962	06/611,518	10/22/85
4,548,964	06/679,639	10/22/85
4,548,969	06/497,313	10/22/85
4,548,974	06/513,513	10/22/85
4,548,975	06/535,688	10/22/85
4,548,980	06/632,830	10/22/85
4,548,982	06/528,922	10/22/85
4,548,995	06/651,621	10/22/85
4,549,003	06/664,917	10/22/85
4,549,005	06/658,969	10/22/85
4,549,009	06/612,750	10/22/85
4,549,010	06/625,166	10/22/85
4,549,017	06/535,010	10/22/85
4,549,025	06/680,825	10/22/85
4,549,028	06/552,288	10/22/85
4,549,032	06/613,595	10/22/85
4,549,033	06/536,268	10/22/85
4,549,039	06/503,359	10/22/85
4,549,043	06/568,020	10/22/85
4,549,044	06/539,568	10/22/85
4,549,048	06/581,220	10/22/85
4,549,053	06/472,485	10/22/85
4,549,054	06/541,912	10/22/85
4,549,057	06/664,371	10/22/85
4,549,061	06/472,373	10/22/85
4,549,079	06/453,935	10/22/85
4,549,083	06/496,627	10/22/85
4,549,084	06/451,900	10/22/85
4,549,087	06/451,921	10/22/85
4,549,105	06/569,140	10/22/85
4,549,108	06/497,464	10/22/85
4,549,110	06/566,849	10/22/85
4,549,118	06/595,127	10/22/85
4,549,120	06/515,224	10/22/85
4,549,125	06/614,973	10/22/85
4,549,130	06/513,205	10/22/85
4,549,131	06/451,834	10/22/85
4,549,134	06/648,902	10/22/85
4,549,141	06/427,696	10/22/85
4,549,144	06/528,285	10/22/85
4,549,147	06/480,927	10/22/85
4,549,150	06/439,162	10/22/85
4,549,153	06/528,949	10/22/85
4,549,156	06/363,888	10/22/85
4,549,164	06/358,442	10/22/85
4,549,166	06/361,437	10/22/85
4,549,169	06/447,302	10/22/85
4,549,175	06/433,193	10/22/85
4,549,176	06/481,385	10/22/85
4,549,182	06/424,781	10/22/85
4,549,186	06/368,370	10/22/85
4,549,189	06/500,291	10/22/85
4,549,197	06/395,416	10/22/85
4,549,201	06/546,538	10/22/85
4,549,208	06/563,789	10/22/85
4,549,212	06/522,278	10/22/85
4,549,220	06/471,111	10/22/85
4,549,222	06/471,349	10/22/85
4,549,223	06/548,490	10/22/85
4,549,224	06/487,802	10/22/85
4,549,225	06/310,131	10/22/85
4,549,230	06/564,891	10/22/85
4,549,233	06/507,068	10/22/85
4,549,242	06/385,871	10/22/85
4,549,246	06/626,671	10/22/85
4,549,250	06/666,386	10/22/85
4,549,256	06/541,258	10/22/85
4,549,266	06/555,263	10/22/85
4,549,271	06/464,495	10/22/85
4,549,273	06/448,448	10/22/85
4,549,275	06/510,343	10/22/85
4,549,282	06/558,476	10/22/85
4,549,284	06/473,866	10/22/85

Patent Number	Serial Number	Issue Date
4,549,295	06/506,552	10/22/85
4,549,297	06/472,466	10/22/85
4,549,299	06/475,276	10/22/85
4,549,300	06/477,856	10/22/85
4,549,303	06/565,806	10/22/85
4,549,306	06/718,821	10/22/85
4,873,727	07/050,489	10/17/89
4,873,730	06/787,040	10/17/89
4,873,732	07/261,260	10/17/89
4,873,735	07/077,371	10/17/89
4,873,741	07/032,744	10/17/89
4,873,744	07/167,699	10/17/89
4,873,759	07/198,218	10/17/89
4,873,760	07/139,270	10/17/89
4,873,763	07/266,347	10/17/89
4,873,767	07/209,017	10/17/89
4,873,768	07/039,408	10/17/89
4,873,772	06/880,176	10/17/89
4,873,774	07/162,588	10/17/89
4,873,779	07/311,603	10/17/89
4,873,781	07/215,569	10/17/89
4,873,782	07/215,721	10/17/89
4,873,788	07/211,040	10/17/89
4,873,794	06/865,323	10/17/89
4,873,795	07/266,395	10/17/89
4,873,796	07/199,601	10/17/89
4,873,797	07/201,048	10/17/89
4,873,798	07/271,104	10/17/89
4,873,806	07/270,075	10/17/89
4,873,816	07/142,801	10/17/89
4,873,826	07/291,190	10/17/89
4,873,827	07/251,177	10/17/89
4,873,828	06/846,338	10/17/89
4,873,834	07/180,205	10/17/89
4,873,837	07/252,474	10/17/89
4,873,839	07/255,436	10/17/89
4,873,841	07/331,796	10/17/89
4,873,843	07/220,269	10/17/89
4,873,852	07/264,361	10/17/89
4,873,856	07/213,362	10/17/89
4,873,863	07/277,314	10/17/89
4,873,866	07/033,771	10/17/89
4,873,868	07/162,329	10/17/89
4,873,869	06/411,731	10/17/89
4,873,870	07/145,373	10/17/89
4,873,872	07/148,011	10/17/89
4,873,877	07/085,659	10/17/89
4,873,880	07/176,549	10/17/89
4,873,891	07/286,090	10/17/89
4,873,893	07/189,035	10/17/89
4,873,898	07/299,777	10/17/89
4,873,899	07/134,882	10/17/89
4,873,900	06/944,470	10/17/89
4,873,904	07/184,602	10/17/89
4,873,905	07/194,872	10/17/89
4,873,908	07/227,143	10/17/89
4,873,913	06/906,741	10/17/89
4,873,914	07/152,367	10/17/89
4,873,916	07/155,554	10/17/89
4,873,917	07/259,195	10/17/89
4,873,918	07/234,515	10/17/89
4,873,920	07/205,348	10/17/89
4,873,921	07/219,557	10/17/89
4,873,927	07/277,272	10/17/89
4,873,928	07/062,020	10/17/89
4,873,929	07/034,388	10/17/89
4,873,933	07/264,885	10/17/89
4,873,936	07/265,404	10/17/89
4,873,952	07/161,013	10/17/89
4,873,957	07/294,640	10/17/89
4,873,960	07/214,484	10/17/89
4,873,962	07/191,875	10/17/89
4,873,964	07/257,689	10/17/89
4,873,968	07/234,648	10/17/89
4,873,975	07/132,599	10/17/89
4,873,984	06/869,502	10/17/89
4,873,986	07/186,894	10/17/89
4,873,987	07/213,358	10/17/89
4,873,988	07/194,463	10/17/89

Patent Number	Serial Number	Issue Date
4,874,003	06/562,460	10/17/89
4,874,011	07/296,223	10/17/89
4,874,015	07/294,758	10/17/89
4,874,022	07/195,781	10/17/89
4,874,023	07/251,267	10/17/89
4,874,025	07/194,196	10/17/89
4,874,033	07/124,611	10/17/89
4,874,036	07/218,987	10/17/89
4,874,040	07/214,427	10/17/89
4,874,041	07/109,874	10/17/89
4,874,047	07/222,139	10/17/89
4,874,049	07/306,814	10/17/89
4,874,054	07/089,552	10/17/89
4,874,058	07/222,276	10/17/89
4,874,060	07/046,644	10/17/89
4,874,062	07/240,935	10/17/89
4,874,063	07/263,676	10/17/89
4,874,076	07/273,174	10/17/89
4,874,077	07/180,443	10/17/89
4,874,078	07/201,575	10/17/89
4,874,079	07/153,311	10/17/89
4,874,082	07/257,504	10/17/89
4,874,087	07/169,739	10/17/89
4,874,096	07/215,153	10/17/89
4,874,101	07/201,329	10/17/89
4,874,102	07/265,178	10/17/89
4,874,106	07/241,378	10/17/89
4,874,107	07/173,490	10/17/89
4,874,114	07/269,349	10/17/89
4,874,121	07/189,521	10/17/89
4,874,123	07/272,348	10/17/89
4,874,129	07/213,738	10/17/89
4,874,133	07/259,410	10/17/89
4,874,143	07/204,564	10/17/89
4,874,144	07/098,957	10/17/89
4,874,146	07/256,679	10/17/89
4,874,147	07/181,677	10/17/89
4,874,152	07/180,906	10/17/89
4,874,154	07/316,549	10/17/89
4,874,157	07/180,520	10/17/89
4,874,161	07/124,955	10/17/89
4,874,164	06/886,796	10/17/89
4,874,167	07/253,571	10/17/89
4,874,177	06/615,284	10/17/89
4,874,178	07/296,605	10/17/89
4,874,180	07/102,028	10/17/89
4,874,181	07/238,911	10/17/89
4,874,199	07/109,890	10/17/89
4,874,200	07/174,914	10/17/89
4,874,202	07/187,243	10/17/89
4,874,203	07/164,890	10/17/89
4,874,204	07/211,364	10/17/89
4,874,205	07/179,739	10/17/89
4,874,209	07/294,817	10/17/89
4,874,211	07/295,842	10/17/89
4,874,217	07/179,395	10/17/89
4,874,218	07/221,059	10/17/89
4,874,224	07/198,025	10/17/89
4,874,237	07/190,755	10/17/89
4,874,240	07/162,431	10/17/89
4,874,248	07/225,104	10/17/89
4,874,261	07/276,800	10/17/89
4,874,262	07/181,155	10/17/89
4,874,265	07/206,555	10/17/89
4,874,268	07/259,927	10/17/89
4,874,269	07/189,386	10/17/89
4,874,274	07/267,715	10/17/89
4,874,275	07/064,466	10/17/89
4,874,281	07/030,648	10/17/89
4,874,289	07/202,660	10/17/89
4,874,291	07/196,987	10/17/89
4,874,294	07/198,501	10/17/89
4,874,298	07/164,703	10/17/89
4,874,301	07/159,397	10/17/89
4,874,306	07/278,044	10/17/89
4,874,311	07/060,420	10/17/89
4,874,316	07/180,847	10/17/89

Patent Number	Serial Number	Issue Date
4,874,324	07/227,576	10/17/89
4,874,327	07/267,854	10/17/89
4,874,328	07/190,153	10/17/89
4,874,334	07/259,538	10/17/89
4,874,344	07/213,233	10/17/89
4,874,345	07/277,652	10/17/89
4,874,346	07/141,566	10/17/89
4,874,348	07/191,230	10/17/89
4,874,351	07/266,165	10/17/89
4,874,356	07/072,338	10/17/89
4,874,367	07/152,467	10/17/89
4,874,374	07/329,799	10/17/89
4,874,376	07/037,331	10/17/89
4,874,377	07/199,118	10/17/89
4,874,381	07/211,229	10/17/89
4,874,386	07/049,940	10/17/89
4,874,387	07/265,440	10/17/89
4,874,393	07/067,111	10/17/89
4,874,400	07/244,666	10/17/89
4,874,407	07/306,911	10/17/89
4,874,425	06/867,108	10/17/89
4,874,430	07/300,399	10/17/89
4,874,435	07/138,349	10/17/89
4,874,438	07/138,192	10/17/89
4,874,446	07/208,977	10/17/89
4,874,450	07/220,363	10/17/89
4,874,454	07/042,053	10/17/89
4,874,455	07/008,623	10/17/89
4,874,473	07/039,550	10/17/89
4,874,474	07/176,457	10/17/89
4,874,479	07/298,517	10/17/89
4,874,486	07/128,398	10/17/89
4,874,488	07/119,461	10/17/89
4,874,503	07/291,411	10/17/89
4,874,509	07/042,419	10/17/89
4,874,516	06/812,056	10/17/89
4,874,517	07/075,466	10/17/89
4,874,523	07/231,332	10/17/89
4,874,524	07/175,329	10/17/89
4,874,528	07/220,628	10/17/89
4,874,530	07/126,408	10/17/89
4,874,532	07/212,822	10/17/89
4,874,546	07/075,657	10/17/89
4,874,547	06/718,985	10/17/89
4,874,551	07/034,734	10/17/89
4,874,556	07/266,237	10/17/89
4,874,557	07/266,919	10/17/89
4,874,558	07/284,846	10/17/89
4,874,559	07/298,896	10/17/89
4,874,564	07/134,057	10/17/89
4,874,566	07/058,355	10/17/89
4,874,568	07/249,035	10/17/89
4,874,575	07/246,888	10/17/89
4,874,576	07/300,330	10/17/89
4,874,585	07/165,312	10/17/89
4,874,588	06/708,247	10/17/89
4,874,590	07/178,912	10/17/89
4,874,599	06/798,080	10/17/89
4,874,600	06/853,105	10/17/89
4,874,603	07/168,155	10/17/89
4,874,608	07/043,175	10/17/89
4,874,611	07/129,503	10/17/89
4,874,615	07/168,442	10/17/89
4,874,616	07/188,469	10/17/89
4,874,624	07/242,680	10/17/89
4,874,625	07/084,598	10/17/89
4,874,631	07/157,238	10/17/89
4,874,634	07/181,280	10/17/89
4,874,635	07/177,254	10/17/89
4,874,638	07/171,050	10/17/89
4,874,642	07/092,809	10/17/89
4,874,644	07/171,642	10/17/89
4,874,648	07/167,796	10/17/89
4,874,652	07/213,467	10/17/89
4,874,654	07/203,223	10/17/89
4,874,656	07/186,854	10/17/89
4,874,661	07/132,287	10/17/89
4,874,668	07/070,697	10/17/89
4,874,670	07/126,989	10/17/89

Patent Number	Serial Number	Issue Date
4,874,675	07/101,082	10/17/89
4,874,691	07/109,436	10/17/89
4,874,695	06/703,644	10/17/89
4,874,706	07/015,174	10/17/89
4,874,708	07/012,662	10/17/89
4,874,709	07/217,912	10/17/89
4,874,710	06/831,410	10/17/89
4,874,732	07/072,747	10/17/89
4,874,733	07/072,748	10/17/89
4,874,735	07/064,468	10/17/89
4,874,741	07/181,514	10/17/89
4,874,742	07/096,746	10/17/89
4,874,744	07/323,606	10/17/89
4,874,745	07/103,324	10/17/89
4,874,755	07/135,898	10/17/89
4,874,756	06/902,182	10/17/89
4,874,760	07/140,999	10/17/89
4,874,762	07/197,103	10/17/89
4,874,763	07/253,699	10/17/89
4,874,765	07/041,206	10/17/89
4,874,768	06/915,358	10/17/89
4,874,772	07/186,859	10/17/89
4,874,773	07/239,005	10/17/89
4,874,774	06/895,806	10/17/89
4,874,776	07/217,384	10/17/89
4,874,777	07/037,284	10/17/89
4,874,782	07/066,907	10/17/89
4,874,783	07/136,606	10/17/89
4,874,793	07/226,133	10/17/89
4,874,797	06/914,110	10/17/89
4,874,803	07/099,192	10/17/89
4,874,811	07/342,699	10/17/89
4,874,820	06/813,725	10/17/89
4,874,823	07/125,423	10/17/89
4,874,827	07/235,505	10/17/89
4,874,832	07/282,182	10/17/89
4,874,834	07/022,898	10/17/89
4,874,839	07/229,082	10/17/89
4,874,844	07/035,045	10/17/89
4,874,850	07/083,463	10/17/89
4,874,851	07/068,376	10/17/89
4,874,856	07/086,138	10/17/89
4,874,861	07/127,518	10/17/89
4,874,864	07/197,927	10/17/89
4,874,866	06/783,727	10/17/89
4,874,869	07/073,915	10/17/89
4,874,882	07/027,631	10/17/89
4,874,890	07/154,485	10/17/89
4,874,893	07/133,045	10/17/89
4,874,894	07/043,788	10/17/89
4,874,899	07/206,731	10/17/89
4,874,900	07/062,884	10/17/89
4,874,906	07/284,071	10/17/89
4,874,907	07/196,603	10/17/89
4,874,908	07/067,763	10/17/89
4,874,910	07/184,678	10/17/89
4,874,911	07/173,893	10/17/89
4,874,914	07/301,464	10/17/89
4,874,919	07/143,950	10/17/89
4,874,923	07/346,382	10/17/89
4,874,925	07/056,433	10/17/89
4,874,931	07/244,680	10/17/89
4,874,932	07/247,348	10/17/89
4,874,939	07/101,170	10/17/89
4,874,942	07/113,620	10/17/89
4,874,946	06/728,970	10/17/89
4,874,952	07/187,367	10/17/89
4,874,957	07/249,673	10/17/89
4,874,964	07/184,126	10/17/89
4,874,972	07/139,638	10/17/89
4,874,976	07/229,663	10/17/89
4,874,977	07/191,878	10/17/89
4,874,981	07/192,341	10/17/89
4,874,982	07/208,952	10/17/89
4,874,986	06/864,979	10/17/89
4,874,987	07/091,680	10/17/89
4,874,988	07/356,655	10/17/89

4,874,990	07/234,792	10/17/89
4,874,996	07/206,265	10/17/89
4,875,000	07/233,929	10/17/89
4,875,004	07/200,813	10/17/89
4,875,007	07/292,640	10/17/89
4,875,010	07/174,424	10/17/89
4,875,015	07/221,279	10/17/89
4,875,022	07/174,283	10/17/89
4,875,024	07/279,757	10/17/89
4,875,027	07/247,916	10/17/89
4,875,029	07/139,652	10/17/89
4,875,030	07/322,109	10/17/89
4,875,035	07/162,252	10/17/89
4,875,039	07/158,981	10/17/89
4,875,043	07/154,430	10/17/89
4,875,044	07/127,279	10/17/89
4,875,054	07/054,490	10/17/89
4,875,061	07/327,090	10/17/89
4,875,070	07/138,082	10/17/89
4,875,109	07/191,342	10/17/89
4,875,115	07/093,470	10/17/89
4,875,120	07/232,780	10/17/89
4,875,122	07/167,679	10/17/89
4,875,127	07/178,400	10/17/89
4,875,133	06/838,387	10/17/89
4,875,143	07/306,462	10/17/89
4,875,147	07/325,947	10/17/89
4,875,150	07/227,895	10/17/89
4,875,154	07/061,338	10/17/89
4,875,161	07/273,173	10/17/89
4,875,167	07/214,919	10/17/89
4,875,168	07/136,797	10/17/89
4,875,169	07/201,304	10/17/89
4,875,171	07/100,865	10/17/89
4,875,172	07/235,710	10/17/89
4,875,174	07/023,075	10/17/89
4,875,175	07/011,497	10/17/89
4,875,176	07/111,753	10/17/89
4,875,178	07/189,023	10/17/89
4,875,180	07/192,081	10/17/89
4,875,186	06/834,751	10/17/89
4,875,194	07/160,982	10/17/89
4,875,198	07/255,119	10/17/89
4,875,199	07/228,151	10/17/89
4,875,200	07/265,446	10/17/89
4,875,203	07/002,952	10/17/89
4,875,209	07/177,286	10/17/89
4,875,220	07/265,923	10/17/89
4,875,221	07/107,373	10/17/89
4,875,226	07/184,210	10/17/89
4,875,228	07/218,157	10/17/89
5,253,366	07/908,384	10/19/93
5,253,368	07/918,464	10/19/93
5,253,370	07/691,716	10/19/93
5,253,371	07/833,079	10/19/93
5,253,377	07/849,515	10/19/93
5,253,379	07/871,167	10/19/93
5,253,382	07/938,290	10/19/93
5,253,383	07/864,936	10/19/93
5,253,384	07/869,187	10/19/93
5,253,388	07/836,271	10/19/93
5,253,393	07/810,492	10/19/93
5,253,395	07/904,568	10/19/93
5,253,401	07/951,912	10/19/93
5,253,403	08/013,262	10/19/93
5,253,405	07/936,670	10/19/93
5,253,407	07/749,349	10/19/93
5,253,408	07/923,823	10/19/93
5,253,413	08/000,347	10/19/93
5,253,414	07/823,668	10/19/93
5,253,415	07/944,347	10/19/93
5,253,421	07/786,918	10/19/93
5,253,423	07/958,080	10/19/93
5,253,425	07/816,622	10/19/93
5,253,427	07/867,351	10/19/93
5,253,434	08/029,968	10/19/93
5,253,438	07/709,281	10/19/93
5,253,440	07/944,392	10/19/93
5,253,441	07/878,077	10/19/93

Patent Number	Serial Number	Issue Date
5,253,442	07/917,172	10/19/93
5,253,443	07/838,414	10/19/93
5,253,444	07/937,304	10/19/93
5,253,446	07/848,104	10/19/93
5,253,447	07/918,227	10/19/93
5,253,449	07/952,057	10/19/93
5,253,454	07/996,040	10/19/93
5,253,455	07/702,182	10/19/93
5,253,456	07/851,965	10/19/93
5,253,457	07/807,072	10/19/93
5,253,458	07/838,861	10/19/93
5,253,459	07/720,281	10/19/93
5,253,460	07/902,709	10/19/93
5,253,462	07/824,944	10/19/93
5,253,468	07/753,431	10/19/93
5,253,475	07/902,249	10/19/93
5,253,482	07/904,683	10/19/93
5,253,487	07/926,420	10/19/93
5,253,490	07/878,238	10/19/93
5,253,491	07/936,274	10/19/93
5,253,496	07/866,859	10/19/93
5,253,497	07/837,633	10/19/93
5,253,498	07/933,776	10/19/93
5,253,518	07/576,692	10/19/93
5,253,519	07/778,129	10/19/93
5,253,520	07/624,165	10/19/93
5,253,533	07/736,400	10/19/93
5,253,534	07/760,521	10/19/93
5,253,539	07/727,571	10/19/93
5,253,540	07/944,413	10/19/93
5,253,551	07/551,874	10/19/93
5,253,552	07/772,844	10/19/93
5,253,553	07/855,833	10/19/93
5,253,559	07/717,734	10/19/93
5,253,560	07/912,228	10/19/93
5,253,561	07/774,344	10/19/93
5,253,562	07/924,760	10/19/93
5,253,565	07/666,192	10/19/93
5,253,579	07/835,127	10/19/93
5,253,582	07/762,824	10/19/93
5,253,585	07/874,105	10/19/93
5,253,586	07/961,487	10/19/93
5,253,587	07/996,779	10/19/93
5,253,590	07/871,499	10/19/93
5,253,602	07/802,688	10/19/93
5,253,617	07/940,074	10/19/93
5,253,630	07/945,519	10/19/93
5,253,637	07/849,772	10/19/93
5,253,641	07/770,550	10/19/93
5,253,648	07/774,661	10/19/93
5,253,649	07/712,004	10/19/93
5,253,652	08/008,492	10/19/93
5,253,655	07/992,066	10/19/93
5,253,659	07/914,192	10/19/93
5,253,661	07/944,436	10/19/93
5,253,666	07/942,847	10/19/93
5,253,667	08/031,969	10/19/93
5,253,673	07/931,396	10/19/93
5,253,682	07/807,146	10/19/93
5,253,685	07/867,055	10/19/93
5,253,696	07/900,561	10/19/93
5,253,699	07/913,211	10/19/93
5,253,700	08/020,351	10/19/93
5,253,704	07/611,797	10/19/93
5,253,709	07/720,044	10/19/93
5,253,720	07/716,664	10/19/93
5,253,722	07/887,159	10/19/93
5,253,724	07/783,614	10/19/93
5,253,727	07/906,896	10/19/93
5,253,734	07/850,171	10/19/93
5,253,735	07/951,822	10/19/93
5,253,736	07/999,015	10/19/93
5,253,737	07/798,284	10/19/93
5,253,750	08/008,445	10/19/93
5,253,751	07/780,633	10/19/93
5,253,752	08/041,865	10/19/93
5,253,766	07/669,500	10/19/93

5,253,767	07/806,720	10/19/93
5,253,768	08/042,666	10/19/93
5,253,769	07/881,874	10/19/93
5,253,770	07/813,594	10/19/93
5,253,771	07/793,974	10/19/93
5,253,775	07/823,767	10/19/93
5,253,779	07/817,264	10/19/93
5,253,780	07/902,945	10/19/93
5,253,784	07/849,877	10/19/93
5,253,797	07/916,428	10/19/93
5,253,799	07/585,613	10/19/93
5,253,801	07/995,231	10/19/93
5,253,806	07/986,985	10/19/93
5,253,813	07/962,901	10/19/93
5,253,814	07/891,639	10/19/93
5,253,818	07/853,597	10/19/93
5,253,822	07/569,904	10/19/93
5,253,828	07/916,316	10/19/93
5,253,831	07/669,360	10/19/93
5,253,836	07/882,485	10/19/93
5,253,837	07/993,403	10/19/93
5,253,838	07/855,429	10/19/93
5,253,852	07/790,799	10/19/93
5,253,858	07/886,504	10/19/93
5,253,864	06/927,680	10/19/93
5,253,867	07/729,887	10/19/93
5,253,868	07/891,870	10/19/93
5,253,870	07/858,311	10/19/93
5,253,873	07/910,707	10/19/93
5,253,874	07/930,884	10/19/93
5,253,881	07/933,716	10/19/93
5,253,884	07/806,305	10/19/93
5,253,887	07/863,414	10/19/93
5,253,889	07/948,344	10/19/93
5,253,893	07/872,099	10/19/93
5,253,894	07/958,719	10/19/93
5,253,897	07/793,427	10/19/93
5,253,898	07/886,131	10/19/93
5,253,899	07/477,675	10/19/93
5,253,903	07/937,355	10/19/93
5,253,920	07/959,983	10/19/93
5,253,921	07/829,702	10/19/93
5,253,923	07/748,089	10/19/93
5,253,927	07/819,996	10/19/93
5,253,935	07/518,050	10/19/93
5,253,937	07/905,722	10/19/93
5,253,939	07/797,132	10/19/93
5,253,955	07/916,010	10/19/93
5,253,959	07/623,927	10/19/93
5,253,963	07/913,333	10/19/93
5,253,968	07/888,155	10/19/93
5,253,969	07/883,814	10/19/93
5,253,971	07/864,457	10/19/93
5,253,975	07/794,620	10/19/93
5,253,976	07/794,032	10/19/93
5,253,977	07/805,100	10/19/93
5,253,983	07/734,891	10/19/93
5,253,985	08/028,601	10/19/93
5,253,994	07/865,173	10/19/93
5,253,998	07/800,068	10/19/93
5,253,999	07/828,391	10/19/93
5,254,001	07/852,382	10/19/93
5,254,004	08/007,244	10/19/93
5,254,008	07/933,653	10/19/93
5,254,009	07/859,099	10/19/93
5,254,013	07/908,511	10/19/93
5,254,025	07/951,509	10/19/93
5,254,029	07/844,666	10/19/93
5,254,033	07/937,769	10/19/93
5,254,034	07/691,555	10/19/93
5,254,040	07/775,720	10/19/93
5,254,042	07/886,034	10/19/93
5,254,051	07/858,987	10/19/93
5,254,061	07/932,278	10/19/93
5,254,064	07/905,441	10/19/93
5,254,066	07/765,026	10/19/93
5,254,070	07/841,579	10/19/93
5,254,077	07/825,031	10/19/93
5,254,078	07/965,739	10/19/93

Patent Number	Serial Number	Issue Date
5,254,085	07/762,696	10/19/93
5,254,090	07/928,136	10/19/93
5,254,093	07/478,667	10/19/93
5,254,094	07/568,453	10/19/93
5,254,095	07/888,507	10/19/93
5,254,098	08/018,255	10/19/93
5,254,100	07/856,377	10/19/93
5,254,104	07/781,748	10/19/93
5,254,110	07/896,113	10/19/93
5,254,113	07/937,598	10/19/93
5,254,115	07/775,171	10/19/93
5,254,118	07/802,311	10/19/93
5,254,120	07/959,672	10/19/93
5,254,121	07/888,337	10/19/93
5,254,123	07/840,450	10/19/93
5,254,128	07/595,969	10/19/93
5,254,129	07/796,578	10/19/93
5,254,133	07/690,774	10/19/93
5,254,134	07/820,073	10/19/93
5,254,145	08/015,427	10/19/93
5,254,147	07/978,445	10/19/93
5,254,150	07/857,339	10/19/93
5,254,162	07/946,574	10/19/93
5,254,173	07/828,612	10/19/93
5,254,182	07/564,191	10/19/93
5,254,184	07/893,774	10/19/93
5,254,199	07/849,269	10/19/93
5,254,210	07/874,779	10/19/93
5,254,212	07/855,048	10/19/93
5,254,219	07/848,931	10/19/93
5,254,221	07/979,895	10/19/93
5,254,222	07/931,985	10/19/93
5,254,223	07/933,490	10/19/93
5,254,224	07/854,113	10/19/93
5,254,227	07/793,088	10/19/93
5,254,234	07/917,702	10/19/93
5,254,237	07/909,221	10/19/93
5,254,238	07/645,816	10/19/93
5,254,242	07/825,697	10/19/93
5,254,247	07/877,290	10/19/93
5,254,251	07/820,699	10/19/93
5,254,260	07/881,651	10/19/93
5,254,264	07/813,484	10/19/93
5,254,266	07/847,941	10/19/93
5,254,267	07/882,312	10/19/93
5,254,270	07/850,578	10/19/93
5,254,271	07/861,451	10/19/93
5,254,278	07/883,956	10/19/93
5,254,290	07/691,621	10/19/93
5,254,293	07/964,078	10/19/93
5,254,297	07/913,839	10/19/93
5,254,300	07/712,340	10/19/93
5,254,320	07/808,720	10/19/93
5,254,325	07/870,744	10/19/93
5,254,329	07/667,522	10/19/93
5,254,336	07/950,817	10/19/93
5,254,337	07/189,013	10/19/93
5,254,345	07/774,667	10/19/93
5,254,360	07/737,319	10/19/93
5,254,366	07/864,280	10/19/93
5,254,372	07/661,838	10/19/93
5,254,384	07/686,745	10/19/93
5,254,392	07/720,135	10/19/93
5,254,401	07/619,574	10/19/93
5,254,411	07/803,486	10/19/93
5,254,414	07/787,333	10/19/93
5,254,429	07/627,710	10/19/93
5,254,438	07/863,917	10/19/93
5,254,440	07/953,381	10/19/93
5,254,457	07/295,933	10/19/93
5,254,459	07/940,468	10/19/93
5,254,460	07/695,378	10/19/93
5,254,467	07/691,648	10/19/93
5,254,476	07/893,689	10/19/93
5,254,478	07/671,548	10/19/93
5,254,496	08/004,436	10/19/93
5,254,502	07/858,617	10/19/93
5,254,512	07/796,354	10/19/93
5,254,513	07/702,480	10/19/93
5,254,522	07/675,213	10/19/93
5,254,526	07/397,973	10/19/93
5,254,529	07/790,725	10/19/93
5,254,533	07/652,109	10/19/93
5,254,535	07/402,642	10/19/93
5,254,540	07/447,846	10/19/93
5,254,541	07/793,059	10/19/93
5,254,543	08/019,000	10/19/93
5,254,547	07/802,236	10/19/93
5,254,548	07/820,512	10/19/93
5,254,553	07/933,848	10/19/93
5,254,554	07/886,341	10/19/93
5,254,555	07/855,446	10/19/93
5,254,557	07/892,619	10/19/93
5,254,560	07/904,061	10/19/93
5,254,563	07/773,659	10/19/93
5,254,570	07/411,345	10/19/93
5,254,571	07/951,363	10/19/93
5,254,572	07/466,676	10/19/93
5,254,574	07/815,199	10/19/93
5,254,578	07/973,560	10/19/93
5,254,581	08/012,810	10/19/93
5,254,591	07/867,065	10/19/93
5,254,598	07/804,291	10/19/93
5,254,601	07/763,109	10/19/93
5,254,630	07/603,506	10/19/93
5,254,631	07/766,793	10/19/93
5,254,640	07/818,181	10/19/93
5,254,646	07/755,764	10/19/93
5,254,648	07/718,967	10/19/93
5,254,661	07/787,851	10/19/93
5,254,664	07/815,227	10/19/93
5,254,669	07/934,928	10/19/93
5,254,674	07/972,528	10/19/93
5,254,682	07/714,114	10/19/93
5,254,685	07/741,333	10/19/93
5,254,695	07/683,135	10/19/93
5,254,697	07/532,620	10/19/93
5,254,706	07/938,398	10/19/93
5,254,710	08/013,270	10/19/93
5,254,713	08/015,779	10/19/93
5,254,721	08/000,597	10/19/93
5,254,722	07/195,995	10/19/93
5,254,727	07/962,547	10/19/93
5,254,728	07/792,485	10/19/93
5,254,744	07/843,884	10/19/93
5,254,750	08/042,550	10/19/93
5,254,756	07/971,564	10/19/93
5,254,763	07/801,395	10/19/93
5,254,770	06/652,164	10/19/93
5,254,772	07/849,604	10/19/93
5,254,773	08/023,510	10/19/93
5,254,775	07/849,603	10/19/93
5,254,776	07/916,301	10/19/93
5,254,779	07/769,488	10/19/93
5,254,787	07/941,811	10/19/93
5,254,791	08/010,372	10/19/93
5,254,792	07/774,482	10/19/93
5,254,793	08/009,504	10/19/93
5,254,794	07/935,757	10/19/93
5,254,795	07/957,118	10/19/93
5,254,798	07/912,736	10/19/93
5,254,808	07/755,705	10/19/93
5,254,812	07/988,847	10/19/93
5,254,829	07/622,603	10/19/93
5,254,836	07/383,265	10/19/93
5,254,837	08/049,648	10/19/93
5,254,843	07/741,762	10/19/93
5,254,876	07/890,642	10/19/93
5,254,877	07/866,138	10/19/93
5,254,885	07/818,094	10/19/93
5,254,887	07/900,421	10/19/93
5,254,893	07/828,228	10/19/93
5,254,903	07/815,038	10/19/93
5,254,909	07/877,313	10/19/93
5,254,910	07/863,109	10/19/93
5,254,924	07/888,556	10/19/93

Patent Number	Serial Number	Issue Date
5,254,926	07/898,762	10/19/93
5,254,927	07/828,275	10/19/93
5,254,933	07/911,191	10/19/93
5,254,936	07/944,379	10/19/93
5,254,952	07/751,704	10/19/93
5,254,959	07/904,794	10/19/93
5,254,970	07/571,312	10/19/93
5,254,972	07/933,830	10/19/93
5,254,974	07/766,922	10/19/93
5,254,982	07/463,750	10/19/93
5,254,995	07/931,285	10/19/93
5,254,997	07/923,288	10/19/93
5,255,004	07/756,454	10/19/93
5,255,024	08/020,425	10/19/93
5,255,028	07/883,676	10/19/93
5,255,042	07/771,203	10/19/93
5,255,070	07/382,190	10/19/93
5,255,071	07/406,726	10/19/93
5,255,075	07/845,662	10/19/93
5,255,151	07/774,573	10/19/93
5,255,164	07/835,493	10/19/93
5,255,168	07/875,298	10/19/93
5,255,177	07/903,515	10/19/93
5,255,188	07/760,424	10/19/93
5,255,189	07/896,480	10/19/93
5,255,199	07/628,525	10/19/93
5,255,204	07/668,780	10/19/93
5,255,206	07/750,792	10/19/93
5,255,207	07/900,560	10/19/93
5,255,208	07/742,035	10/19/93
5,255,216	07/746,385	10/19/93
5,255,240	07/714,442	10/19/93
5,255,245	07/828,912	10/19/93
5,255,275	07/921,245	10/19/93
5,255,281	07/996,802	10/19/93
5,255,282	07/796,718	10/19/93
5,255,296	07/903,639	10/19/93
5,255,297	07/763,003	10/19/93
5,255,298	07/924,805	10/19/93
5,255,302	07/845,262	10/19/93
5,255,322	07/819,087	10/19/93
5,255,327	07/428,422	10/19/93
5,255,336	07/870,652	10/19/93
5,255,345	07/938,761	10/19/93
5,255,348	07/715,573	10/19/93
5,255,359	07/425,781	10/19/93

Patents Reinstated Due to the Acceptance of a Late Maintenance Fee From 9/12/97

Patent Number	Serial Number	Filing Date	Issue Date	Granted Date
4,511,378	06/482,810	04/07/83	04/16/85	09/16/97
4,734,769	06/745,441	06/17/85	03/29/88	09/18/97
4,798,184	06/931,536	11/17/86	01/17/89	09/12/97
4,823,306	07/085,110	08/14/87	04/18/89	09/15/97
4,834,103	07/150,519	02/09/88	05/30/89	09/15/97
4,885,263	07/029,184	03/23/87	12/05/89	09/17/97
4,892,347	07/202,189	06/02/88	01/09/90	09/15/97
4,993,675	07/438,613	11/17/89	02/19/91	09/15/97
5,027,799	07/598,651	10/18/90	07/02/91	09/12/97
5,044,001	07/541,261	06/20/90	08/27/91	09/16/97
5,124,186	07/567,393	08/14/90	06/23/92	09/12/97
5,128,507	06/575,499	01/30/84	07/07/92	09/18/97
5,135,455	07/680,059	04/30/91	08/04/92	09/15/97
5,150,934	07/707,698	05/30/91	09/29/92	09/18/97
5,163,204	07/669,354	03/14/91	11/17/92	09/15/97
5,174,965	07/679,267	04/02/91	12/29/92	09/15/97
5,180,162	07/766,056	09/26/91	01/19/93	09/16/97
5,181,159	07/855,111	03/11/92	01/19/93	09/15/97
5,191,904	07/746,746	08/19/91	03/09/93	09/16/97
5,194,461	07/721,153	06/26/91	03/16/93	09/16/97
5,201,597	07/679,201	04/02/91	04/13/93	09/15/97
5,203,087	07/895,647	06/09/92	04/20/93	09/12/97
5,207,338	07/847,605	03/04/92	05/04/93	09/15/97
5,215,805	07/728,556	07/11/91	06/01/93	09/15/97
5,234,659	07/776,309	11/15/91	08/10/93	09/15/97

Reissue Applications Filed

Notice under 37 CFR 1.11(b). The reissue applications listed below are open to inspection by the general public in the indicated Examining Groups and copies may be obtained by paying the fee therefor (37 CFR 1.12(b)).

5,535,374, Re. S.N. 08/799,457, Feb. 13, 1997, Cl. 395/500, METHOD AND APPARATUS FOR GENERATING IMAGES SIMULATING NON-HOMOGENEOUS FOG EFFECTS, Graham John Olive, Owner of Record: *Rediffusion Simulation Limited, Sussex, United Kingdom*, Attorney or Agent: Larry S. Nixon, Ex. Gp.: 2300

Requests for Reexamination Filed

Notice under 37 CFR 1.11(c). The requests for reexamination listed below are open to inspection by the general public in the indicated Examining Groups. Copies of the requests and related papers may be obtained by paying the fee therefor established in the Rules (37 CFR 1.19(a)).

In the event correspondence to the patent owner is not received, this notice will be considered to be constructive notice to the patent owner and reexamination will proceed (37 CFR 1.248(a)(5) and 1.525(b)).

D. 316,586, Reexam. No. 90/004,828, Nov. 5, 1997, Cl. D21/237, FLOAT WITH WATER SQUIRTER, Leon H. Tager, et. al., Owner of Record: *Poolmaster, Inc., Sacramento, Calif.*, Attorney or Agent: None, Ex. Gp.: 2901, Requester: Brian L. Wamsley, Londa and Traub, New York, N.Y.

4,287,630, Reexam. No. 90/004,829, Nov. 7, 1997, Cl. 004/252, METHOD OF REPAIRING WATER CLOSET ANCHORING TO FRACTURED CLOSET FLANGE AND SPANNER CLAMP THEREFOR, Mark Bressler, Owner of Record: *Mark Bressler, Troy, Mich./Linmar Design and Dev. Co., Atlanta, Ga.*, Attorney or Agent: Linmar Design and Development Corp., c/o James W. Kayden, Thomas Kayden Horstmeyer and Risley, Atlanta, Ga., Ex. Gp.: 3105, Requester: Robert J. Veal, Veal and Associates, Birmingham, Ala.

4,794,724, Reexam. No. 90/004,824, Nov. 3, 1997, Cl. 043/122, CONTAINMENT TYPE INSECT TRAP, Charles W. Peters, Owner of Record: *Oak Stump Farm, Inc., Eugene, Oreg.*, Attorney or Agent: Caesar Rivise Bernstein Cohen & Pokotilow Ltd., Philadelphia, Pa., Ex. Gp.: 3205, Requester: Owner

5,366,349, Reexam. No. 90/004,825, Nov. 4, 1997, Cl. 417/132, AUTOMATIC LIQUID PUMP WITH VAPOR FLOW PREVENTION FLOW OUTLET VALVE, Edmond Ilg, Owner of Record: *Gestra Inc., West Caldwell, N.J.*, Attorney or Agent: Collard and Roe, Roslyn, N.Y., Ex. Gp.: 3403, Requester: P. McCoy Smith, Kenyon and Kenyon, New York, N.Y.

5,556,803, Reexam. No. 90/004,822, Oct. 28, 1997, Cl. 438/053, METHOD FOR FABRICATING A CHARGE COUPLED DEVICE, Kyung S. Lee, Owner of Record: *Goldstar Electron Co., Ltd., Chungcungbuk-do, Korea*, Attorney or Agent: Finnegan Henderson Farabow Garrett & Dunner, Washington, D.C., Ex. Gp.: 1104, Requester: Owner

5,606,817, Reexam. No. 90/004,826, Nov. 5, 1997, Cl. 042/051, MUZZLE-LOADING FIREARM, Troi N. Saches, Owner of Record: *Remington Arms Co., Wilmington, Del.*, Attorney or Agent: Michael E. Ray, Womble Carlyle Sandridge & Rice, Winston-Salem, N.C., Ex. Gp.: 2201, Requester: Donald H. Zarley, Zarley McKee Thomte Vorhees & Sease, Des Moines, Iowa

5,637,891, Reexam. No. 90/004,823, Oct. 28, 1997, Cl. 257/215, CHARGE COUPLED DEVICE HAVING DIFFERENT INSULATORS, Kyung S. Lee, Owner of Record: *Goldstar Electron Co., Ltd., Chungcungbuk-do, Korea*, Attorney or Agent: Finnegan Henderson Farabow Garrett & Dunner, Washington, D.C., Ex. Gp.: 2503, Requester: Owner

---

Notice of Expiration of Trademark Registrations Due To Failure to Renew

15 U.S.C. 1059 provides that each trademark registration may be renewed for periods of ten years from the end of the expiring period upon payment of the prescribed fee and the filing of an acceptable application for renewal. This may be done at any time within six months before the expiration of the period for which the registration was issued or renewed, or it may be done within three months after such expiration on payment of an additional fee.

According to the records of the Office, the trademark registrations listed below are expired due to failure to renew in accordance with 15 U.S.C. 1059.

TRADEMARK REGISTRATIONS WHICH EXPIRED OCTOBER 20, 1997 DUE TO FAILURE TO RENEW

Reg. Number	Serial Number	Reg. Date
114,938	71/090,969	01/16/1917
115,003	71/097,801	01/16/1917
342,244	71/379,900	01/12/1937
342,245	71/379,901	01/12/1937
342,262	71/381,037	01/12/1937
342,269	71/381,184	01/12/1937
342,290	71/381,823	01/12/1937
342,295	71/382,032	01/12/1937
342,309	71/382,352	01/12/1937
342,334	71/382,698	01/12/1937
342,349	71/382,984	01/12/1937
342,357	71/383,092	01/12/1937
639,868	72/006,241	01/15/1957
639,869	72/007,421	01/15/1957
639,872	72/008,238	01/15/1957
639,878	72/010,126	01/15/1957
639,882	71/700,680	01/15/1957
639,887	72/005,123	01/15/1957
639,892	72/011,033	01/15/1957
639,900	72/008,947	01/15/1957
639,902	72/009,176	01/15/1957
639,906	72/004,626	01/15/1957
639,908	72/008,798	01/15/1957
639,909	72/008,800	01/15/1957
639,910	72/008,805	01/15/1957
639,914	72/008,387	01/15/1957
639,916	72/010,557	01/15/1957
639,918	72/010,559	01/15/1957
639,923	71/697,465	01/15/1957
639,926	72/006,013	01/15/1957
639,927	72/006,247	01/15/1957
639,928	72/006,802	01/15/1957
639,929	72/006,814	01/15/1957
639,930	72/006,947	01/15/1957
639,936	71/697,289	01/15/1957
639,937	71/697,290	01/15/1957
639,951	72/008,182	01/15/1957
639,963	72/005,625	01/15/1957
639,970	72/004,503	01/15/1957
639,980	72/006,513	01/15/1957
639,988	72/006,896	01/15/1957
639,989	72/006,923	01/15/1957
639,990	71/695,059	01/15/1957
639,994	72/004,979	01/15/1957
639,996	72/012,923	01/15/1957
639,997	72/012,924	01/15/1957
640,000	72/008,386	01/15/1957
640,001	72/009,762	01/15/1957
640,009	71/698,889	01/15/1957
640,011	72/002,298	01/15/1957
640,018	72/007,823	01/15/1957
640,025	72/009,162	01/15/1957
640,029	72/007,484	01/15/1957
640,033	72/001,709	01/15/1957
640,037	72/003,256	01/15/1957
640,044	72/007,347	01/15/1957
640,046	72/007,127	01/15/1957
640,058	72/006,824	01/15/1957
640,064	72/009,303	01/15/1957
640,065	72/009,593	01/15/1957
640,069	72/013,105	01/15/1957
640,092	72/009,516	01/15/1957
640,106	71/690,189	01/15/1957
640,111	71/695,009	01/15/1957
640,117	71/699,251	01/15/1957
640,119	72/001,036	01/15/1957
640,122	72/002,183	01/15/1957
640,124	72/002,185	01/15/1957
640,131	72/005,055	01/15/1957
640,136	72/008,113	01/15/1957
640,137	72/009,370	01/15/1957
640,117	71/692,663	01/15/1957
640,153	71/670,210	01/15/1957
640,159	71/694,437	01/15/1957
640,160	71/694,438	01/15/1957
640,161	71/698,763	01/15/1957
640,167	71/693,507	01/15/1957
640,180	71/684,224	01/15/1957
640,183	71/693,566	01/15/1957
1,035,136	73/045,358	03/09/1976
1,055,839	73/020,016	01/11/1977
1,055,841	73/042,240	01/11/1977
1,055,846	73/081,556	01/11/1977
1,055,849	73/084,811	01/11/1977
1,055,853	73/053,035	01/11/1977
1,055,854	73/053,700	01/11/1977
1,055,856	73/077,046	01/11/1977
1,055,859	73/088,241	01/11/1977
1,055,861	73/089,607	01/11/1977

Reg. Number	Serial Number	Reg. Date
1,055,862	73/034,684	01/11/1977
1,055,865	73/064,207	01/11/1977
1,055,866	73/065,694	01/11/1977
1,055,873	73/080,453	01/11/1977
1,055,874	73/081,443	01/11/1977
1,055,875	73/081,444	01/11/1977
1,055,880	73/088,138	01/11/1977
1,055,884	73/088,224	01/11/1977
1,055,886	73/088,391	01/11/1977
1,055,896	73/088,964	01/11/1977
1,055,897	73/089,067	01/11/1977
1,055,898	73/012,851	01/11/1977
1,055,902	73/054,077	01/11/1977
1,055,903	73/066,456	01/11/1977
1,055,906	73/072,840	01/11/1977
1,055,907	73/073,065	01/11/1977
1,055,908	73/073,208	01/11/1977
1,055,912	73/084,628	01/11/1977
1,055,913	73/086,437	01/11/1977
1,055,918	73/089,890	01/11/1977
1,055,923	73/092,535	01/11/1977
1,055,925	73/031,671	01/11/1977
1,055,927	73/066,692	01/11/1977
1,055,928	73/066,693	01/11/1977
1,055,929	73/070,328	01/11/1977
1,055,930	73/074,152	01/11/1977
1,055,931	73/074,153	01/11/1977
1,055,935	73/080,410	01/11/1977
1,055,937	73/086,620	01/11/1977
1,055,938	73/087,184	01/11/1977
1,055,939	73/087,494	01/11/1977
1,055,944	73/090,475	01/11/1977
1,055,946	73/091,356	01/11/1977
1,055,947	73/010,281	01/11/1977
1,055,949	73/073,298	01/11/1977
1,055,952	73/017,029	01/11/1977
1,055,954	73/037,618	01/11/1977
1,055,959	73/056,616	01/11/1977
1,055,973	73/089,409	01/11/1977
1,055,979	73/078,191	01/11/1977
1,055,980	73/084,839	01/11/1977
1,055,981	73/084,907	01/11/1977
1,055,982	73/086,204	01/11/1977
1,055,983	73/091,930	01/11/1977
1,055,986	73/092,114	01/11/1977
1,055,987	73/092,304	01/11/1977
1,055,989	73/092,582	01/11/1977
1,055,990	73/019,574	01/11/1977
1,055,993	73/062,538	01/11/1977
1,055,994	73/064,585	01/11/1977
1,055,996	73/074,617	01/11/1977
1,055,998	73/079,291	01/11/1977
1,055,999	73/082,161	01/11/1977
1,056,001	73/086,160	01/11/1977
1,056,002	73/086,206	01/11/1977
1,056,003	73/086,529	01/11/1977
1,056,004	73/086,615	01/11/1977
1,056,005	73/087,978	01/11/1977
1,056,010	73/085,784	01/11/1977
1,056,011	73/087,042	01/11/1977
1,056,014	73/087,384	01/11/1977
1,056,015	73/087,625	01/11/1977
1,056,021	73/086,637	01/11/1977
1,056,033	73/054,146	01/11/1977
1,056,038	73/066,227	01/11/1977
1,056,040	73/072,234	01/11/1977
1,056,041	73/076,109	01/11/1977
1,056,045	73/077,394	01/11/1977
1,056,048	73/079,090	01/11/1977
1,056,051	73/079,485	01/11/1977
1,056,054	73/083,283	01/11/1977
1,056,060	73/086,867	01/11/1977
1,056,061	73/086,904	01/11/1977
1,056,063	73/087,467	01/11/1977
1,056,064	73/088,016	01/11/1977
1,056,065	73/089,402	01/11/1977
1,056,066	73/089,700	01/11/1977
1,056,070	73/085,972	01/11/1977
1,056,073	73/087,730	01/11/1977
1,056,075	73/087,611	01/11/1977
1,056,077	73/032,110	01/11/1977
1,056,078	73/033,547	01/11/1977
1,056,079	73/056,400	01/11/1977
1,056,085	73/086,965	01/11/1977
1,056,090	73/089,044	01/11/1977
1,056,092	73/046,322	01/11/1977
1,056,094	73/065,645	01/11/1977
1,056,097	73/089,068	01/11/1977
1,056,103	73/048,300	01/11/1977
1,056,104	73/076,052	01/11/1977
1,056,108	73/088,067	01/11/1977
1,056,114	73/086,565	01/11/1977
1,056,119	73/046,908	01/11/1977
1,056,121	73/052,152	01/11/1977
1,056,122	73/058,348	01/11/1977
1,056,123	73/058,837	01/11/1977
1,056,126	73/067,743	01/11/1977
1,056,128	73/068,324	01/11/1977
1,056,135	73/078,449	01/11/1977
1,056,140	73/084,353	01/11/1977
1,056,142	73/085,859	01/11/1977
1,056,146	73/086,479	01/11/1977
1,056,149	73/045,142	01/11/1977
1,056,152	73/040,950	01/11/1977
1,056,158	73/070,810	01/11/1977
1,056,159	73/074,167	01/11/1977
1,056,162	73/081,580	01/11/1977
1,056,163	73/082,162	01/11/1977
1,056,168	73/083,622	01/11/1977
1,056,173	73/086,830	01/11/1977
1,056,181	73/090,261	01/11/1977
1,056,184	73/090,591	01/11/1977
1,056,187	73/066,961	01/11/1977
1,056,192	73/085,322	01/11/1977
1,056,193	73/086,940	01/11/1977
1,056,197	73/010,212	01/11/1977
1,056,198	73/024,145	01/11/1977
1,056,200	73/048,242	01/11/1977
1,056,201	73/052,486	01/11/1977
1,056,202	73/055,862	01/11/1977
1,056,203	73/059,148	01/11/1977
1,056,204	73/072,301	01/11/1977
1,056,207	73/079,410	01/11/1977
1,056,208	73/080,712	01/11/1977
1,056,209	73/087,728	01/11/1977
1,056,213	73/088,257	01/11/1977
1,056,214	73/088,258	01/11/1977
1,056,217	73/090,302	01/11/1977
1,056,221	73/020,159	01/11/1977
1,056,223	73/050,538	01/11/1977
1,056,224	73/051,692	01/11/1977
1,056,226	73/079,289	01/11/1977
1,056,233	73/090,581	01/11/1977
1,056,234	73/090,766	01/11/1977
1,056,235	73/090,887	01/11/1977
1,056,237	73/066,146	01/11/1977
1,056,241	73/066,564	01/11/1977
1,056,243	73/075,260	01/11/1977
1,056,244	73/086,841	01/11/1977
1,056,248	73/085,296	01/11/1977
1,056,251	73/048,690	01/11/1977
1,056,252	73/055,866	01/11/1977
1,056,253	73/055,936	01/11/1977
1,056,254	73/065,133	01/11/1977
1,056,257	73/078,379	01/11/1977
1,056,265	73/067,223	01/11/1977
1,056,266	73/068,644	01/11/1977
1,056,272	73/085,456	01/11/1977
1,056,276	73/089,627	01/11/1977
1,056,282	73/092,159	01/11/1977
1,056,289	73/062,157	01/11/1977
1,056,290	73/076,359	01/11/1977
1,056,300	73/084,597	01/11/1977
1,056,302	73/054,634	01/11/1977
1,056,304	73/067,244	01/11/1977
1,056,305	73/069,137	01/11/1977

Reg. Number	Serial Number	Reg. Date
1,056,306	73/069,138	01/11/1977
1,056,307	73/069,140	01/11/1977
1,056,311	73/078,585	01/11/1977
1,056,313	73/080,734	01/11/1977
1,056,315	73/085,039	01/11/1977
1,056,317	73/085,430	01/11/1977
1,056,318	73/085,817	01/11/1977
1,056,321	73/088,327	01/11/1977
1,056,325	73/089,709	01/11/1977
1,056,338	72/457,542	01/11/1977
1,056,339	72/355,418	01/11/1977
1,056,340	73/071,463	01/11/1977
1,056,342	73/077,554	01/11/1977
1,056,345	73/065,040	01/11/1977
1,056,356	73/071,752	01/11/1977
1,056,358	73/057,765	01/11/1977
1,056,359	72/460,990	01/11/1977

Notice of New Fee Codes for Continued Patent Applications

Effective December 1, 1997, several new fee codes were implemented which pertain to Continued Patent Applications (CPAs). The new fee codes will enable better tracking and efficient processing of CPAs in the Revenue Accounting and Management system, which is the main financial system. Please make a note of these new fee codes for your records.

The new fee codes are as follows:

Fee Code *large/small entity*	Description	Amount *large/small entity*
131/231	Utility Filing Fee (CPA)	$790.00/$395.00
132/232	Design Filing Fee (CPA)	$330.00/$165.00
133/233	Plant Filing Fee (CPA)	$540.00/$270.00
134/234	Reissue Filing Fee (CPA)	$790.00/$395.00

Service by Publication

A petition to cancel the registrations identified below having been filed, and the notice of such proceeding sent by certified mail to registrants at their last known address having been returned by the Postal Service as undeliverable, notice is hereby given that unless the registrants listed herein, their assigns or legal representatives, shall enter an appearance within thirty days of this publication, the cancellation will proceed as in the case of default.

HRVisions, Inc., Tampa, Fla., Reg. No. 1,764,293, for the mark "HRVision", Canc. No. 26,415.

Rachel Rendel dba Rachel, Burlingame, Calif., Reg. No. 1,120,334, for the mark "RACHEL PLUS DESIGN", Canc. No. 25,811.

Time Sports, Inc., Trenton, N.J., Reg. No. 1,684,162, for the mark "SABRE", Canc. No. 26,550.

JEAN BROWN
Technical Program Manager
Trademark Trial
and Appeal Board, for
ROBERT M. ANDERSON
Deputy Assistant Commissioner
for Trademarks

Erratum

In the Notice of Certificates of Correction appearing at 1198 O.G. 96, delete all reference to Patent No. 5,556,100, since no Certificate of Correction was granted.

Certificates of Correction for the Week of December 30, 1997

D. 380,179	5,591,591	5,641,377	5,658,730
D. 385,423	5,594,778	5,641,665	5,658,776
P. 09,996	5,594,922	5,641,888	5,659,408
4,938,876	5,595,740	5,642,182	5,659,432
5,178,923	5,598,034	5,642,235	5,659,450
5,210,475	5,600,185	5,642,902	5,659,566
5,220,001	5,605,279	5,642,977	5,659,815
5,241,283	5,610,552	5,643,254	5,660,422
5,268,582	5,610,636	5,643,549	5,660,955
5,319,358	5,611,241	5,643,751	5,661,005
5,353,606	5,613,308	5,644,621	5,661,449
5,354,866	5,613,836	5,644,659	5,661,694
5,361,354	5,614,008	5,644,894	5,662,031
5,425,593	5,616,204	5,645,578	5,662,553
5,427,856	5,617,016	5,645,641	5,662,760
5,436,058	5,617,128	5,645,819	5,663,456
5,437,291	5,617,217	5,645,901	5,663,730
5,437,408	5,617,224	5,646,154	5,664,091
5,466,625	5,618,481	5,646,177	5,664,297
5,468,329	5,618,589	5,646,208	5,664,600
5,487,852	5,620,459	5,646,941	5,665,056
5,487,946	5,620,632	5,647,179	5,665,154
5,499,326	5,620,793	5,647,924	5,665,178
5,505,547	5,621,533	5,648,954	5,665,670
5,506,377	5,623,037	5,648,975	5,665,707
5,518,185	5,623,513	5,648,982	5,667,232
5,518,650	5,624,962	5,649,120	5,667,315
5,519,010	5,625,477	5,649,419	5,667,374
5,519,055	5,625,692	5,649,506	5,667,492
5,523,226	5,626,180	5,650,843	5,667,884
5,533,094	5,626,322	5,651,251	5,668,328
5,537,118	5,626,553	5,651,370	5,668,358
5,539,275	5,628,419	5,651,408	5,668,463
5,541,360	5,629,931	5,651,987	5,669,153
5,541,617	5,630,977	5,652,046	5,669,914
5,552,618	5,631,983	5,652,128	5,670,469
5,553,001	5,633,012	5,652,136	5,671,424
5,559,478	5,633,740	5,652,239	5,671,480
5,561,367	5,635,047	5,652,265	5,673,161
5,561,797	5,635,448	5,652,938	5,673,484
5,563,619	5,636,187	5,653,100	5,673,638
5,568,727	5,636,259	5,654,119	5,673,704
5,569,744	5,636,273	5,654,227	5,674,426
5,574,083	5,637,358	5,654,966	5,674,788
5,576,351	5,637,649	5,655,146	5,675,395
5,578,091	5,638,762	5,656,107	5,676,032
5,578,842	5,639,449	5,656,136	5,677,219
5,580,664	5,639,732	5,656,381	5,678,405
5,582,366	5,640,537	5,656,626	5,679,377
5,584,771	5,640,574	5,656,763	5,682,563
5,589,616	5,640,627	5,656,812	5,684,161
5,590,352	5,640,740	5,658,628	5,684,167
5,591,222	5,640,746	5,658,658	

DEPARTMENT OF COMMERCE

Patent and Trademark Office

Soliciting applications for membership on Public Advisory Committee for Trademark Affairs

AGENCY: Patent and Trademark Office, Commerce.

ACTION: Notice.

SUMMARY: The Patent and Trademark Office is seeking five members for the Public Advisory Committee for Trademark Affairs. Member terms would begin on January 1, 1998. A member must be an organization that is representative of the intellectual property community, e.g., a bar group, a business organization or an academic institution. Organizations interested in membership should send a letter expressing that interest and containing the information set out in the Supplementary information to the Patent and Trademark Office.

DATES: Submit applications on or before January 8, 1998.

ADDRESSES: Mail letters of request to participate in the Public Advisory Committee for Trademark Affairs to The Honorable Bruce A. Lehman, Assistant Secretary of Commerce and Commissioner of Patents and Trademarks, United States Patent and Trademark Office, Washington, DC 20231.

FOR FURTHER INFORMATION CONTACT: David E. Bucher, Deputy Assistant Commissioner for Trademark Policy and Projects, at (703) 308-9100, ext. 20.

SUPPLEMENTARY INFORMATION: This Committee is chartered under the Federal Advisory Committee Act (Pub. L. 92-463). Its purpose has been, and continues to be, that of advising the Patent and Trademark Office (Office) on ways to increase the Office's efficiency and

effectiveness and to provide a continuing flow of insights and perceptions from the private sector to the Office in the area of international and domestic trademark law.

The Office amended the charter of the Committee in 1996 to make the Committee more diverse and more representative of trademark owners, trademark practitioners and the Intellectual Property community as a whole. Accordingly, the Commissioner will select five representative organizations from among intellectual property organizations, bar groups, business-related organizations and academia. The five organizations whose members' terms will expire on December 31, 1997, are not precluded from responding to this notice. However, no member may serve more than two consecutive terms.

Each organization's letter to the Commissioner should explain the nature, size and characteristics of the organization and why this particular group is deserving of membership on this committee.

Selection of the organizations will be based on the following criteria: (1) members' familiarity with the operations of the Patent and Trademark Office relating to trademarks and trademark rules, trademark practices, and the administration of the trademark operations; (2) members' experience practicing before the Patent and Trademark Office in trademark matters; and (3) an indication of the organization's interest in trademark practices by programs such as established committees designed to improve trademark operations, or legal education activities regarding trademark practices.

Dated: December 12, 1997

Bruce A. Lehman
Assistant Secretary of Commerce and
Commissioner of Patents and Trademarks

Summary of Final Decisions
Issued by the
Trademark Trial and Appeal Board
November 10-14, 1997

Date Issued	Type of Case[1]	Proceeding or App's No.	Party/Parties	Issue	TTAB Decision	Opposer's/ Petitioner's Mark and Goods/Services	Applicant's/ Respondent's Mark and Goods/Services	Mark and Goods Cited by Examining Attorney	Citable as Precedent of TTAB
11-10	EX	75/041,715	Conrad Baer	whether the matter presented for registration functions as a trademark for applicant's goods or serves merely as ornamentation on applicant's goods	Refusal Affirmed		"RAGNAROK" (clothing, namely, tops, bottoms, pants, sweatshirts, shorts, jackets, t-shirts, tank tops, dresses, swimwear, footwear, socks, hats, visors, caps, belts, ties and scarves)		No
11-13	EX	74/603,959	Delipaso Foods, Inc.	2(d)	Refusal Affirmed		"HEAVENLY" (canned tomatoes sold only to institutional users)	"HEAVENLY" (in stylized lettering) (canned peaches)	No

(1)EX = EX PARTE APPEAL; OPP=OPPOSITION; CANC=CANCELLATION; CU=CONCURRENT USE; (SJ)=SUMMARY JUDGMENT; (R)=REQ. FOR RECONSIDERATION; (MD)=MOTION TO DISMISS; (MR)=MOTION TO REOPEN

SPECIAL BOXES FOR PATENT MAIL

Special box designations should be used to allow forwarding of particular types of mail to the appropriate areas as quickly as possible. Such mail is forwarded to the appropriate area without being opened. Only the specified type of document should be placed in an envelope addressed to one of these special boxes. If any documents other than the specified type identified for each special box are addressed to that box, they will be significantly delayed in reaching the appropriate area for which they are intended.

Please address mail as follows:

Box __________
Assistant Commissioner for Patents
Washington, D.C. 20231

Box Designations	Explanation
Box 7	Reissue applications for patents involved in litigation and subsequently filed related papers.
Box 12	Contributions to the Examiner Education Program.
Box 313b	Petitions under 37 CFR 1.313(b) to withdraw a patent application from issue after payment of the issue fee and any papers associated with the petition, including papers necessary for filing a continuing application.
Box AF	Expedited procedure for processing amendments and other responses after final rejection.
Box Comments Patents	Public comments regarding patent related regulations and procedures.
Box CPA	Requests for Continued Prosecution Applications (CPA's) under 37 CFR 1.53(b).
Box DAC	Petitions decided by the Office of Petitions including petitions to revive and petitions to accept late payment of issue fees or maintenance fees.
Box DD	Disclosure Documents or materials related to the Disclosure Document Program.
Box Design	The filing of all design patent applications and any communications relating thereto.
Box Issue Fee	All communications following the receipt of a PTOL-85, "Notice of Allowance and Issue Fee Due," and prior to the issuance of a patent should be addressed to Box Issue Fee, unless advised to the contrary. Assignments are the exception. Assignments should be submitted in a separate envelope and not be sent to Box Issue Fee.
Box Missing Parts	Response to the Notice to File Missing Parts of Application and associated papers and fees.
Box MPEP	Submissions concerning the Manual of Patent Examining Procedures.
Box Non-Fee Amendment	Non-fee amendments to patent applications. (Use Box AF for responses after final rejection).
Box PATENT APPLICATION	New patent applications and associated papers and fees.
Box Patent Ext.	Applications for patent term extension and any communications relating thereto.
Box PCT	Mail related to applications filed under the Patent Cooperation Treaty.
Box Provisional Patent Application	The filing of all provisional patent applications and any communications relating thereto.
Box Reconstruction	Correspondence pertaining to the reconstruction of lost patent files.
Box Reexam	Requests for Reexamination for *original* request papers *only*.
Box Sequence	Submission of diskette for biotechnical application.
Box SN	For fee and petitions under 37 CFR 1.182 to obtain date received and/or serial number for patent applications *prior* to the Office's standard notification (return post card or the official "Filing Receipt," "Notice to File Missing Parts," or "Notice of Incomplete Application").

SPECIAL BOXES FOR TRADEMARK MAIL

Special box designations should be used to allow forwarding of particular types of trademark mail to the appropriate areas as quickly as possible. In addition to these box designations, filers are encouraged to indicate whether the contents of the envelope contain a fee. Envelopes containing a fee should be marked "FEE;" envelopes not containing a fee should be marked "NO FEE." Box designations and "FEE/NO FEE" indicators should appear on the envelope as well as on the cover sheet or first page of any document.

Please address mail as follows:

Box __________
FEE (or NO FEE)
Assistant Commissioner for Trademarks
2900 Crystal Drive
Arlington, Virginia 22202-3513

Box Designations	Explanation
Box NEW APP FEE	New trademark applications and fees.
Box ITU FEE	Statements of Use (SOUs) and extension requests.
Box TTAB FEE	Oppositions, cancellation petitions, and ex parte appeals.
Box TTAB NO FEE	Interferences, motions, and extension requests.
Box STATUS NO FEE	Written status inquiries.
Box POST REG FEE	Affidavits, renewals, corrections and amendments.
Box RESPONSES NO FEE	Responses to Examining Attorneys' Office actions and Post Registration actions.

SPECIAL BOXES APPLICABLE TO *BOTH* PATENT AND TRADEMARK MAIL

The following special box designations are applicable to both patent and trademark related mail, and the recommendations for "Special Boxes for Patent Mail" (above) should be followed for the types of mail listed below.

Please address mail as follows:

Box __________
Commissioner of Patents and Trademarks
Washington, D.C. 20231

Box Designations	Explanation
Box 3	Mail for the Office of Personnel from NFC.
Box 4	Mail for the Deputy Assistant Secretary of Commerce and Deputy Commissioner of Patents and Trademarks; Office of Legislative and International Affairs.
Box 6	Mail for the Office of Procurement.
Box 8	All papers for the Office of the Solicitor *except* communications relating to *pending litigation and disciplinary proceedings*; papers relating to pending litigation in court cases shall be mailed only to Office of the Solicitor, P.O. Box 15667, Arlington, Virginia 22215 and papers relating to pending disciplinary proceedings before the Administrative Law Judge or the Commissioner shall be mailed only to the Office of the Solicitor, P.O. Box 16116, Arlington, Virginia 22215.
Box 9	Coupon orders for U.S. patent and trademark copies.
Box 10	Orders for certified copies of PTO documents.
Box 11	Electronic Ordering Service (EOS).
Box 13	Mail for the Employee and Labor Relations Division.
Box 14	Mail directed to the APS Contracts Office.
Box 16	Deposit Account Replenishment Checks.
Box 17	Invoices directed to the Office of Finance.
Box 171	Vacancy Announcement Applications.
Box Assignment	All assignment documents except those filed with new applications.
Box EEO	Mail for the Office of Civil Rights.
Box Interference	Communications relating to interferences and applications and patents involved in interference.
Box M Fee	Correspondence regarding patent maintenance fees and related matter.
Box OED	Mail for the Office of Enrollment and Discipline.

Reference Collections of U.S. Patents and Trademarks Available for Public Use in Patent and Trademark Depository Libraries

The following libraries, designated as Patent and Trademark Depository Libraries (PTDLs), receive patent and trademark information from the U.S. Patent and Trademark Office. Many PTDLs have on file patents issued since 1790, trademarks published since 1872, and select collections of foreign patents. All PTDLs receive both the patent and trademark sections of the *Official Gazette of the U.S. Patent and Trademark Office* and numerical sets of patents in a variety of formats. Patent and trademark search systems in the Cassis CD-ROM series are available at all PTDLs to increase access to that information. It is through the CD-ROM systems and other depository materials that preliminary patent and trademark searches may be conducted through the numerically arranged collections.

Each PTDL offers reference publications which outline and provide access to the patent and trademark classification systems, as well as other documents and publications which supplement the basic search tools. PTDLs provide technical staff assistance in using all materials.

All information is available for use by the public free of charge. However, there may be charges associated with the use of on-line systems, photocopying and related services.

Since there are variations in the scope of patent and trademark collections among the PTDLs, and their hours of service to the public vary, anyone contemplating use of these collections at a particular library is urged to contact that library in advance about its collections, services, and hours in order to avert possible inconvenience.

Partnership PTDLs provide enhanced and expanded services for which fees are charged. They offer on-line patent text and image searching, on-line trademark searching, and videoconferencing for examiner interviews and workshops. They accept disclosure documents on site, order file wrappers, assignment documents and certified copies for their customers, and host a variety of seminars aimed at specific audiences, including practitioners, paralegals, and independent inventors. Currently, partnerships are located at the Great Lakes Patent and Trademark Center (GLPTC) at the Detroit Public Library in Detroit, Michigan and the Sunnyvale Center for Innovation, Invention and Ideas (SCI^3) in Sunnyvale, California.

State	*Name of Library*	*Telephone Contact*
Alabama	Auburn University Libraries	(334) 844-1747
	Birmingham Public Library	(205) 226-3620
Alaska	Anchorage: Z.J. Loussac Public Library	(907) 562-7323
Arizona	Tempe: Noble Library, Arizona State University	(602) 965-7010
Arkansas	Little Rock: Arkansas State Library	(501) 682-2053
California	Los Angeles Public Library	(213) 228-7220
	Sacramento: California State Library	(916) 654-0069
	San Diego Public Library	(619) 236-5813
	San Francisco Public Library	(415) 557-4500
	Sunnyvale Center for Innovation, Invention and Ideas	(408) 730-7290
Colorado	Denver Public Library	(303) 640-6220
Connecticut	Hartford Public Library	Not Yet Operational
	New Haven Free Public Library	Not Yet Operational
Delaware	Newark: University of Delaware Library	(302) 831-2965
Dist. of Columbia	Washington: Howard University Libraries	(202) 806-7252
Florida	Fort Lauderdale: Broward County Main Library	(954) 357-7444
	Miami-Dade Public Library	(305) 375-2665
	Orlando: University of Central Florida Libraries	(407) 823-2562
	Tampa Campus Library, University of South Florida	(813) 974-2726
Georgia	Atlanta: Price Gilbert Memorial Library, Georgia Institute of Technology	(404) 894-4508
Hawaii	Honolulu: Hawaii State Public Library System	(808) 586-3477
Idaho	Moscow: University of Idaho Library	(208) 885-6235
Illinois	Chicago Public Library	(312) 747-4450
	Springfield: Illinois State Library	(217) 782-5659
Indiana	Indianapolis-Marion County Public Library	(317) 269-1741
	West Lafayette Siegesmund Engineering Library, Purdue University	(765) 494-2872
Iowa	Des Moines: State Library of Iowa	(515) 281-4118
Kansas	Wichita: Ablah Library, Wichita State University	(316) 978-3155
Kentucky	Louisville Free Public Library	(502) 574-1611
Louisiana	Baton Rouge: Troy H. Middleton Library, Louisiana State University	(504) 388-8875
Maine	Orono: Raymond H. Fogler Library, University of Maine	(207) 581-1678
Maryland	College Park: Engineering and Physical Sciences Library, University of Maryland	(301) 405-9157
Massachusetts	Amherst: Physical Sciences Library, University of Massachusetts	(413) 545-1370
	Boston Public Library	(617) 536-5400 Ext. 265
Michigan	Ann Arbor: Media Union Library, University of Michigan	(313) 647-5735
	Big Rapids: Abigail S. Timme Library, Ferris State University	(616) 592-3602
	Detroit: Great Lakes Patent and Trademark Center	(313) 833-3379
Minnesota	Minneapolis Public Library and Information Center	(612) 630-6120
Mississippi	Jackson: Mississippi Library Commission	(601) 359-1036
Missouri	Kansas City: Linda Hall Library	(816) 363-4600
	St. Louis Public Library	(314) 241-2288 Ext. 390
Montana	Butte: Montana College of Mineral Science and Technology Library	(406) 496-4281
Nebraska	Lincoln: Engineering Library, University of Nebraska-Lincoln	(402) 472-3411
Nevada	Reno: University of Nevada, Reno Library	(702) 784-6500 Ext. 257
New Hampshire	Concord: New Hampshire State Library	(603) 271-2239

Reference Collections of U.S. Patents and Trademarks Available for Public Use in Patent and Trademark Depository Libraries—(continued)

State	*Name of Library*	*Telephone Contact*
New Jersey	Newark Public Library	(201) 733-7782
	Piscataway: Library of Science and Medicine, Rutgers University	(908) 445-2895
New Mexico	Albuquerque: University of New Mexico General Library	(505) 277-4412
New York	Albany: New York State Library	(518) 474-5355
	Buffalo and Erie County Public Library	(716) 858-7101
	New York Public Library (The Research Libraries)	(212) 592-7000
	Stony Brook: Engineering Library, State University of New York	Not Yet Operational
North Carolina	Raleigh: D.H. Hill Library, North Carolina State University	(919) 515-3280
North Dakota	Grand Forks: Chester Fritz Library, University of North Dakota	(701) 777-4888
Ohio	Akron - Summit County Public Library	(330) 643-9075
	Cincinnati and Hamilton County, Public Library of	(513) 369-6971
	Cleveland Public Library	(216) 623-2870
	Columbus: Ohio State University Libraries	(614) 292-6175
	Toledo/Lucas County Public Library	(419) 259-5212
Oklahoma	Stillwater: Oklahoma State University Center for International Trade Development	(405) 744-7086
Oregon	Portland: Paul L. Boley Law Library, Lewis & Clark College	(503) 768-6786
Pennsylvania	Philadelphia, The Free Library of	(215) 686-5331
	Pittsburgh, Carnegie Library of	(412) 622-3138
	University Park: Pattee Library, Pennsylvania State University	(814) 865-4861
Puerto Rico	Mayaquez General Library, University of Puerto Rico	(787) 832-4040 Ext. 3459
Rhode Island	Providence Public Library	(401) 455-8027
South Carolina	Clemson University Libraries	(864) 656-3024
South Dakota	Rapid City: Devereaux Library, South Dakota School of Mines and Technology	(605) 394-1275
Tennessee	Memphis & Shelby County Public Library and Information Center	(901) 725-8877
	Nashville: Stevenson Science Library, Vanderbilt University	(615) 322-2717
Texas	Austin: McKinney Engineering Library, University of Texas at Austin	(512) 495-4500
	College Station: Sterling C. Evans Library, Texas A & M University	(409) 845-3826
	Dallas Public Library	(214) 670-1468
	Houston: The Fondren Library, Rice University	(713) 527-8101 Ext. 2587
	Lubbock: Texas Tech University	(806) 742-2282
Utah	Salt Lake City: Marriott Library, University of Utah	(801) 581-8394
Vermont	Burlington: Bailey/Howe Library, University of Vermont	(802) 656-2542
Virginia	Richmond: James Branch Cabell Library, Virginia Commonwealth University	(804) 828-1104
Washington	Seattle: Engineering Library, University of Washington	(206) 543-0740
West Virginia	Morgantown: Evansdale Library, West Virginia University	(304) 293-2510 Ext. 113
Wisconsin	Madison: Kurt F. Wendt Library, University of Wisconsin Madison	(608) 262-6845
	Milwaukee Public Library	(414) 286-3051
Wyoming	Casper: Natrona County Public Library	(307) 237-4935

PATENT EXAMINING CORPS

BRUCE A. LEHMAN, Commissioner
VACANT, Assistant Commissioner for Patents
NICHOLAS P. GODICI, (Acting) Deputy Assistant Commissioner for Patents
STEPHEN G. KUNIN, Deputy Assistant Commissioner for Patent Policy

PATENT EXAMINING GROUPS	Phone number Area Code 703	New Case Date*
CHEMICAL EXAMINING GROUPS		
GENERAL METALLURGICAL, INORGANIC, PETROLEUM AND ELECTRICAL CHEMISTRY, ENGINEERING AND DESIGNS, GROUP 1100—THEODORE MORRIS, Director	308-0661	12/30/95
ORGANIC CHEMISTRY, DRUG, BIO-AFFECTING AND BODY TREATING COMPOSITION, GROUP 1200/2900—JOHN E. KITTLE, Director	308-1235	04/23/96
SPECIALIZED CHEMICAL INDUSTRIES AND CHEMICAL ENGINEERING, GROUP 1300—RICHARD V. FISHER, Director	308-0651	03/25/96
HIGH POLYMER CHEMISTRY, PLASTICS, COATING, PHOTOGRAPHY STOCK MATERIALS AND COMPOSITIONS, GROUP 1500—MARY LEE, Acting Director	308-2351	03/27/96
BIOTECHNOLOGY, GROUP 1800—JOHN J. DOLL, Director	308-0196	07/20/95
ELECTRICAL EXAMINING GROUPS		
INDUSTRIAL ELECTRONICS, PHYSICS AND RELATED ELEMENTS, GROUP 2100—STEWART LEVY, Director	308-1782	09/21/95
SPECIAL LAWS AND ADMINISTRATION, GROUP 2200—ROBERT E. GARRETT, Director	308-0511	12/22/95
COMPUTER SYSTEMS AND COMPUTER APPLICATION, GROUP 2300—JOSEPH J. ROLLA, Director	305-3900	12/22/95
SPECIAL COMPUTER APPLICATIONS: COMPUTER GRAPHICS, BUSINESS PRACTICES, & DIAGNOSTIC TESTING, GROUP 2400—GERALD GOLDBERG, Director	305-3900	11/01/95
ELECTRONIC AND OPTICAL SYSTEMS AND DEVICES, GROUP 2500—JANICE A. HOWELL, Director	308-0956	03/11/96
TELECOMMUNICATIONS, GROUP 2600—JIN F. NG, Director	305-3900	06/01/95
DESIGN, GROUP 2900—JOHN E. KITTLE, Director	305-3293	12/29/95
MECHANICAL EXAMINING GROUPS		
HANDLING AND TRANSPORTATION MEDIA, GROUP 3100—JOHN F. TERAPANE, JR., Director	308-1113	10/25/95
MATERIAL SHAPING, ARTICLE MANUFACTURING AND TOOLS, GROUP 3200—ETHEL CROSS, Director	308-1148	04/30/96
MEDICAL INSTRUMENTS, DIAGNOSTIC EQUIPMENT AND TREATMENT DEVICES; SURGERY AND SURGICAL SUPPLIES; AMUSEMENT AND EXERCISING DEVICES; ANIMAL HUSBANDRY; SPORTING GOODS; TOBACCO PRODUCTS AND MANUFACTURING EQUIPMENT; AND PRINTING, GROUP 3300—J.J. LOVE, Director	308-0858	12/06/95
SOLAR, HEAT, POWER, AND FLUID ENGINEERING DEVICES, GROUP 3400—DONALD G. KELLY, Director	308-0861	12/11/95
GENERAL CONSTRUCTION, PETROLEUM AND MINING ENGINEERING, GROUP 3500—A.L. SMITH, Director	308-2168	08/06/96

*A communication from the examiner should have been received in most applications filed prior to this date.

Patents will Expire as Follows:
(1) The term of any utility or plant patent that is in force on or results from an application filed before June 8, 1995 is the greater of the 20 year term provided in 35 U.S.C. 154(a)(2) or 17 years from grant subject to any terminal disclaimers. 35 U.S.C. 154(c)(1).
(2) All utility and plant patents granted on applications having an actual United States filing date on or after June 8, 1995 are granted for a term which begins on the date on which the patent is granted and ends 20 years from the date on which the application was filed in the United States. If the application contains a specific reference to an earlier application under 35 U.S.C. 120, 121 or 365(c), the patent term ends twenty years from that date on which the earliest application was filed. 35 U.S.C. 154(a)(2).
(3) All design patents are granted for a term of 14 years from the date of the grant.
However, the term of any patent may have been curtailed by disclaimer under the provisions of 35 U.S.C. 153, have lapsed due to failure to pay maintenance fees, or have been extended under the provisions of 35 U.S.C. 154, 155, or 156. Thus, if more reliable information is needed with respect to a particular patent, then the specific patent file should be reviewed to determine the actual date of patent expiration.

TRADEMARK OPERATION

Bruce A. Lehman, Commissioner
Philip G. Hampton, II, Assistant Commissioner
Robert M. Anderson, Deputy Assistant Commissioner
David E. Bucher, Director, Trademark Examining Office
Condition of Trademark Applications as of December 1, 1997

Law Office	Oldest Date	
	New*	Amendment Filed
Law Office 101—Ron Williams, Managing Attorney, (703) 308-9101—4th Floor Foods, Beverages, Wines & Spirits—Int. Classes 29, 30, 31, 32, 33 Services—Int. Classes 35, 36, 37, 38, 39, 40, 41, 42	06/17/97	10/01/97
Law Office 102—Myra Kurzbard, Managing Attorney, (703) 308-9102—5th Floor Scientific Equipment & Furniture—Int. Classes 9, 20 Services—Int. Classes 35, 36, 37, 38, 39, 40, 41, 42	05/05/97	09/29/97
Law Office 103—Michael A. Szoke, Acting Managing Attorney, (703) 308-9103—5th Floor Scientific Equipment & Furniture—Int. Classes 9, 20 Services—Int. Classes 35, 36, 37, 38, 39, 40, 41, 42	05/14/97	11/06/97
Law Office 104—Sidney Moskowitz, Managing Attorney, (703) 308-9104—6th Floor Unwrought metals, Industrial Equipment, Tools, Installation, Vehicles, Firearms, Musical Instruments, Building Materials & Floor Coverings—Int. Classes 6, 7, 8, 11, 12, 13, 15, 19, 27 Services—Int. Classes 35, 36, 37, 38, 39, 40, 41, 42	04/07/97	10/15/97
Law Office 105—Thomas Howell, Managing Attorney, (703) 308-9105—6th Floor Chemicals, Paints, Lubricants, Pharmaceuticals, Medical Apparatus & Tobacco—Int. Classes 1, 2, 4, 5, 10, 34 Services—Int. Classes 35, 36, 37, 38, 39, 40, 41, 42	05/05/97	10/01/97
Law Office 106—Mary Sparrow, Managing Attorney, (703) 308-9106—7th Floor Cosmetics, Cleaning Preparations, Paper Products & Toys—Int. Classes 3, 16, 28 Services—Int. Classes 35, 36, 37, 38, 39, 40, 41, 42	05/06/97	07/10/97
Law Office 107—Thomas Lamone, Managing Attorney, (703) 308-9107—7th Floor Cosmetics, Cleaning Preperations, Paper Products & Toys—Int. Classes 3, 16, 28 Services—Int. Classes 35, 36, 37, 38, 39, 40, 41, 42	07/16/97	10/07/97
Law Office 108—David Shallant, Managing Attorney, (703) 308-9108—8th Floor Precious metals, Fibers, Leather goods, Housewares, Cordage, Yarns, Fabrics, Clothing & Notions—Int. Classes 14, 17, 18, 21, 22, 23, 24, 25, 26 Services-Int. Classes 35, 36, 37, 38, 39, 40, 41, 42	04/10/97	09/04/97
Law Office 109—Deborah Cohn, Managing Attorney, (703) 308-9109—8th Floor Precious metals, Fibers, Leather goods, Housewares, Cordage, Yarns, Fabrics, Clothing & Notions—Int. Classes 14, 17, 18, 21, 22, 23, 24, 25, 26 Services—Int. Classes 35, 36, 37, 38, 39, 40, 41, 42	04/12/97	10/17/97
**Collective Marks—Class 200		
**Certification Marks—Classes A & B		
Office of Trademark Services—Terron Simms, Director, (703) 308-9100		
Trademark Assistance Center—(703) 308-9000		
Pre-Examination—Alan Lambert, Supervisor, (703) 308-9401 ext. 188		
Intent-To-Use—(ITU)—(703) 308-9500		
Post Registration Section—Mary Bowman, Supervisor, (703) 308-9500 ext. 126		
Affidavits Under Sections 8 & 15 (All Classes)	11/06/97	—0—
Renewals (All Classes)	10/24/97	—0—
Section 12(c) Publications (All Classes)	10/02/97	—0—

1. ** Assigned to all Law Office

2. Applicants with inquiries concerning the status of their applications and a touch telephone should call (703) 305-8747 from 6:30 a.m. to Midnight EST, Monday through Friday. This automated voice system will provide the current status of your application. Applicants are urged not to file unnecessary inquiries concerning the status of their applications. See SECTION 411 of the TRADEMARK MANUAL OF EXAMINING PROCEDURE.

3. * These dates identify the oldest unassigned new case in each Law Office. All cases with earlier dates have either been examined and made the subject of an action or are currently being worked on by the assigned examining attorney.

REEXAMINATIONS

DECEMBER 30, 1997

Matter enclosed in heavy brackets [ ] appears in the patent but forms no part of this reexamination specification; matter printed in italics indicates additions made by reexamination.

B1 5,044,091 (3405th)
METHOD OF PREPARING A FREEZE-DRIED FORMULATION OF A DRUG

Seigo Ueda; Kunio Hashi; Takashi Shiokari, and Akira Kusai, all of Shinagawa, Japan, assignors to Sankyo Company, Limited, Tokyo, Japan

Reexamination Request No. 90/003,743, Feb. 27, 1995.
Reexamination Certificate for Patent 5,044,091, issued Sep. 3, 1991, Ser. No. 509,967, Apr. 16, 1990.
Claims priority, application Japan, Apr. 18, 1989, 1-98561
Int. Cl.^{6} F26B *5/06*

U.S. Cl. 34—303

AS A RESULT OF REEXAMINATION, IT HAS BEEN DETERMINED THAT:

Claims **1**, **3–8** and **15–34** are cancelled.

Claims **2**, and **9–14** are determined to be patentable as amended.

New claims **35–41** are added and determined to be patentable.

35. A method of preparing a freeze-dried preparation-in which at least one of a first liquid and a second liquid contains a pharmaceutical compound or preparation dissolved or suspended therein, wherein the first liquid contains N-benzoyl-β-alanine and is frozen to form a frozen first liquid at a temperature low enough to withstand heat from the second liquid which contains (5R, 6S, 8R)-2-[(3S)-1-acetimidoylpyrrolidin-3-yl-thio]-6-(1-hydroxyethyl)-2-carbapenem-3- carboxylic acid, and the second liquid is cooled, then added onto the frozen first liquid, thereon frozen at a temperature low enough to form a frozen second liquid, and the frozen first liquid and the frozen second liquid are freeze-dried together to prepare a two layer freeze-dried product.

B1 5,474,318 (3406th)
LONG-TRAVEL REAR SUSPENSION SYSTEM FOR BICYCLES

John P. Castellano, 1509 Liberty St., El Cerrito, Calif. 94530

Reexamination Request No. 90/004,449, Nov. 12, 1996.
Reexamination Certificate for Patent 5,474,318, issued Dec. 12, 1995, Ser. No. 121,607, Sep. 15, 1993.
Int. Cl.^{6} B62K *25/04*

U.S. Cl. 280—284

AS A RESULT OF REEXAMINATION, IT HAS BEEN DETERMINED THAT:

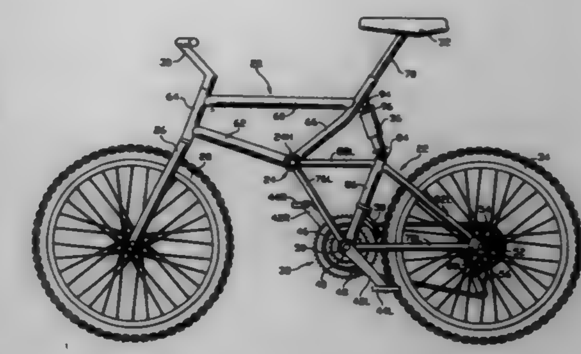

The patentability of claims **1–23** is confirmed.

1. A bicycle with enhanced shock-absorbing capabilities comprising:

a frame having front and rear wheels pivotably mounted thereon, said front and rear wheels being spaced apart in a fore-and-aft direction, said wheels being mounted to rotate parallel to a fore-and-aft vertical plane when said bicycle is traveling in a straight line,

said frame having a main or forward frame portion, said front wheel being pivotably mounted upon said main frame portion,

a bicycle seat being mounted atop said main frame portion,

said frame having a rear or swingarm frame portion comprising at least one approximately tetrahedral shape, said rear wheel being mounted upon said swingarm frame portion,

a pedal crankset assembly being mounted upon said swingarm frame portion,

means for flexibly connecting said swingarm frame portion to said main frame portion so that said swingarm frame portion can swing, with respect to said main frame portion, about a pivot axis perpendicular to said fore-and-aft plane,

the height of said pivot axis being between 43 and 73 cm above ground when said wheels rest upon ground,

the fore-and-aft location of said pivot axis being such as to produce a vertical travel of said seat between 1.7 and 4.0 times the vertical travel of said pedal crankset assembly in response to movement of said swingarm frame portion with respect to said main frame portion while both of said wheels are in contact with level ground,

whereby said bicycle will have improved anti-squat characteristics.

REISSUES

Matter enclosed in heavy brackets [ ] appears in the original patent but forms no part of this reissue specification; matter printed in italics indicates additions made by reissue.

Re. 35,700
REMOVABLE SNOWPLOW ASSEMBLY WITH PIVOTABLE LIFT STAND

Gary E. Watson; James R. Doornek, both of Mequon, and Thomas P. Fechter, Jackson, all of Wis., assignors to Douglas Dynamics, L.L.C., Milwaukee, Wis.

Original No. 5,125,174, dated Jun. 30, 1992, Ser. No. 686,123, Apr. 15, 1991. Continuation of Ser. No. 268,195, Jun. 29, 1994, abandoned. Application for reissue Dec. 1, 1995, Ser. No. 566,277

Int. Cl.^{6} E01H *5/04*

U.S. Cl. 37—231 — 56 Claims

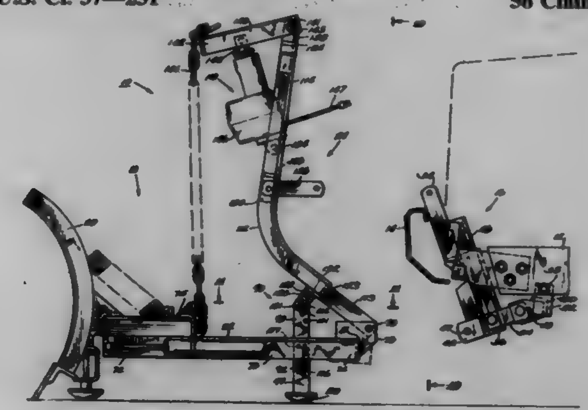

1. A vehicle mounted snowplow blade assembly comprising
a vehicle having a frame member and a bumper,
a [mount] *mounting* frame fixed to the frame member and located generally behind the bumper,
a snowplow blade assembly including an A-frame and a snowplow blade fixed to the A-frame,
a lift frame supported by the A-frame, and
mounting means for selectively connecting the A-frame to the mounting frame for pivotable movement about a generally horizontally extending pivot axis and for affording removal of the A-frame and the lift frame from the mounting frame as a unit so as to leave the [mount] *mounting* frame on the vehicle and behind the bumper.

Re. 35,701
QUADRUPOLE MASS SPECTROMETER

Paul V. Foley, North Attleboro, Mass., assignor to MKS Instruments, Inc., Andover, Mass.

Original No. 5,302,827, dated Apr. 12, 1994, Ser. No. 60,344, May 11, 1993. Application for reissue Mar. 29, 1996, Ser. No. 623,942

Int. Cl.^{6} H01J *49/42;49/14*

U.S. Cl. 250—292 — 34 Claims

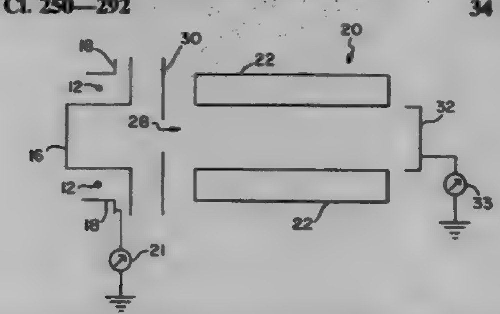

18. A mass spectrometer for measuring the relative amounts of mass of one or more constituents of a gas, said spectrometer comprising:

(a) means for defining a space such that a representative sample of a gas in the spectrometer is present inside and outside of said space;
(b) electron source means, disposed outside said space, for producing electrons;
(c) means for propelling said electrons produced by said electron source means into said space so that positive ions of each said constituent are produced both inside and outside said space;
(d) means for generating an ion current from the ions produced inside said space so that said ion current represents the relative amounts of said constituents inside said space;
(e) ion collector means for collecting ions generated outside said space; and
(f) means for generating a signal as a function of the ions collected by said ion collector means and representative of said ion current.

Re. 35,702
COMPACT MOTOR MOUNT FOR INFORMATION STORAGE DEVICES

Heinrich Cap, St. Georgen; Alois Von Ehr, Imberg, and Edgar Zuckschwert, St. Georgen, all of Germany, assignors to Papst Licensing, GmbH, Spaichingen, Germany

Original No. 5,028,829, dated Jul. 2, 1991, Ser. No. 595,654, Oct. 9, 1990, Continuation of Ser. No. 87,372, Jul. 2, 1993, abandoned, which is a continuation of Ser. No. 384,039, Jul. 24, 1989, abandoned, which is a continuation of Ser. No. 125,782, Nov. 27, 1987, abandoned, which is a continuation of Ser. No. 884,537, Jul. 11, 1986, abandoned. Application for reissue Nov. 2, 1995, Ser. No. 552,135

Claims priority, application Switzerland, Jul. 24, 1985, 3227/85

Int. Cl.^{6} H02K *5/04;16/00;* G11B *5/008*

U.S. Cl. 310—114 — 47 Claims

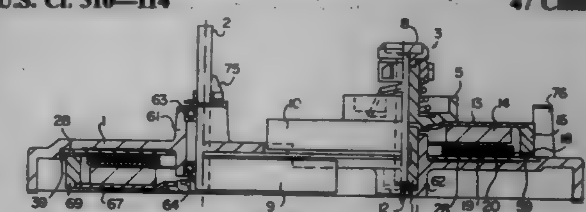

17. A drive for an information storage device having a moveable storage medium and a head associated therewith to permit information to be stored on and retrieved from the storage medium, said drive comprising:

a base plate including a planar layer of ferromagnetic material having a printed circuit board affixed to one side thereof; and
a motor supported by said base plate, said motor including a stator coil assembly mounted on the outer surface of said printed circuit board and a shaft rotatably mounted on said base plate, said shaft having a first end portion extending from said printed circuit board generally at a right angle thereto adjacent the stator coil assembly and a second end portion extending from said ferromagnetic layer generally at a right angle thereto for operative engagement with the information storage device to allow the head to store information on and retrieve information from the storage medium, said motor further including a permanent magnet rotor attached to the first end portion of said shaft, said rotor providing a stray flux return path from said stator coil assembly to said base plate via a first air gap between said stator coil assembly and said rotor and a second air gap between said rotor and said base plate to provide at least some shielding of the storage medium from stray electromagnetic interference emitted from the stator coil assembly.

Re. 35,703

COMBINATION COATING THICKNESS GAUGE USING A MAGNETIC FLUX DENSITY SENSOR AND AN EDDY CURRENT SEARCH COIL

Frank J. Koch, Ogdensburg, N.Y.; Leon C. Vandervalk, and David J. Beamish, both of Brockville, Canada, assignors to DeFelsko Corporation, Ogdensburg, N.Y.

Original No. 5,343,146, dated Aug. 30, 1994, Ser. No. 956,280, Oct. 5, 1992. Application for reissue Aug. 28, 1996, Ser. No. 703,968

Int. Cl.^{6} G01B *7/06;* **G01R** *33/12;* **G01N** *27/72*

U.S. Cl. 324—230 **31 Claims**

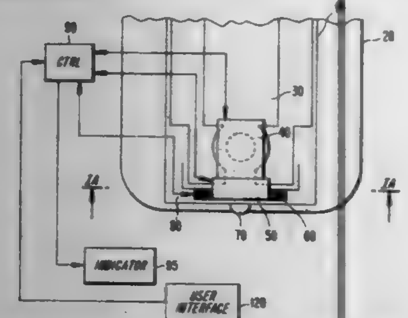

21. A coating thickness gauge for measuring both a nonferrous coating on a ferrous substrate and a nonconductive coating on a conductive nonferrous substrate, comprising:

a magnet having a pole face;

a magnetic flux density sensor disposed near the pole face of said magnet so as to sense a magnetic field in a neighborhood of said pole face;

an eddy current search coil disposed around the neighborhood of said pole face; and

control means for receiving inputs from said magnetic flux density sensor and said eddy current search coil, selecting one of said inputs for calculating a coating thickness, and calculating a coating thickness based on the selected input.

Re. 35,704

PLANE LIGHT SOURCE UNIT

Ithussei Chiba, Tokyo, and Makoto Oe, Tama, both of Japan, assignors to Mitsubishi Rayon Co., Ltd., Tokyo, Japan

Original No. 5,126,882, dated Jun. 30, 1992, Ser. No. 269,723, Nov. 10, 1988. Application for reissue Jun. 29, 1994, Ser. No. 267,388

Claims priority, application Japan, Nov. 12, 1987, 62-284289; Jun. 2, 1988, 63-134393

Int. Cl.^{6} G02B *27/00;* **G02F** *1/1335*

U.S. Cl. 359—619 **17 Claims**

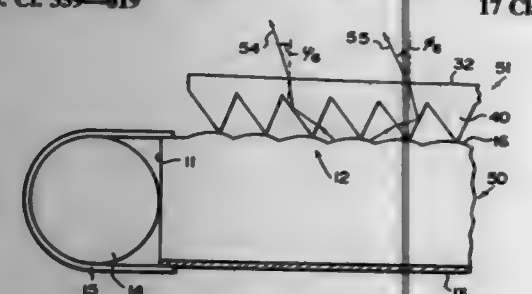

1. A plane light source unit, comprising a first element having a light incident face at [lest] *least* at one side end thereof and a first light emitting surface extending perpendicularly to said light incident face, said first element further having a reflecting layer provided on a surface thereof opposite to said first light emitting surface, and a second element having a light incident surface which receives the light emitted by said first element and a second light emitting surface through which light is emitted in a predetermined direction, at least one of said first light emitting surface and the opposite surface of said first element comprising means having a directive function to cause incident light through said light incident face to emit through said first light emitting surface in two preferential directions oblique to, and on opposite sides of, a normal line thereof, said second element having a large number of prism units formed on said light incident surface thereof each prism unit having at least one surface positioned for effecting total reflection of the light received by said second element,

wherein the direction of substantially all of the light emitting from said second element makes an angle ranging from 0 degrees to 20 degrees with respect to a normal line of said first light emitting surface of said first element.

Re. 35,705

GAS ASSISTED INJECTION MOLDING APPARATUS UTILIZING SLEEVE AND PIN ARRANGEMENT

Jay F. Moldovanyi, Brecksville, Ohio, assignor to Nitrojection Corporation, Chagrin Falls, Ohio

Original No. 5,256,047, dated Oct. 26, 1993, Ser. No. 801,949, Dec. 3, 1991. Application for reissue Sep. 21, 1995, Ser. No. 531,430

Int. Cl.^{6} B29C *45/23*

U.S. Cl. 425—130 **36 Claims**

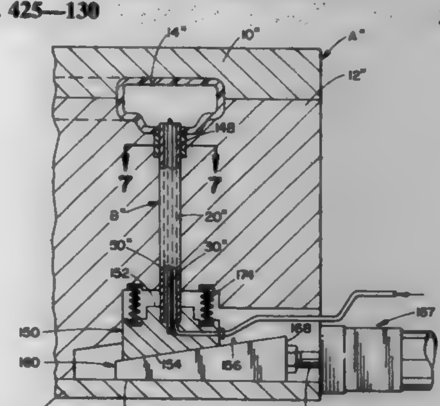

1. An apparatus for use in fluid-assisted injection molding of plastic material so as to form an injection molded product, the apparatus comprising:

a pair of mold members defining, when closed, a sealed cavity;

a first opening provided in one of said mold members for allowing the injection of a plastic material into said cavity;

a second opening provided in one of said mold members, and spaced from said first opening, for allowing the injection of a fluid into said cavity;

a sleeve extending through said second opening, said sleeve having a longitudinally extending bore with an open first end;

[a first means for rigidly securing said sleeve in relation to said one of said mold members;]

a pin extending through said sleeve;

[a second means for rigidly securing said pin in relation to said sleeve;] and,

an annular fluid flow passage defined between a tip of said pin and a tip of said sleeve.

Re. 35,706

LIPOPHILA DERIVATIVES OF MURAMYLPEPTIDES HAVING PROPERTIES OF ACTIVATING MACROPHAGES AND COMPOSITIONS CONTAINING THEM

Nigel Phillips, Pointe Claire, Canada; Françoise Audibert, Neuilly sur Seine, France; Jean-Marie Bernard, Fontenay le Fleury, France; Louis Chedid, Paris, France; Pierre Lefrancier, Gif S/Yvette, France; Michel Level, and Monique Parant, both of Paris, France, assignors to VACSYN Inc., Tampa, Fla.

Original No. 4,939,122, dated Jul. 3, 1990, Ser. No. 206,959, Jun. 9, 1988. Continuation of Ser. No. 886,359, May 21, 1992, abandoned, which is a continuation of Ser. No. 96,794, Sep. 15, 1987, abandoned, which is a continuation of Ser. No. 733,529, May 13, 1985, abandoned. Application for reissue Oct. 25, 1994, Ser. No. 329,142

Claims priority, application France, May 11, 1984, 84 07340

Int. Cl.^{6} A61K *38/14;38/16;* **C07K** *9/00*

U.S. Cl. 514—8 **22 Claims**

1. A muramylpeptide of the formula:

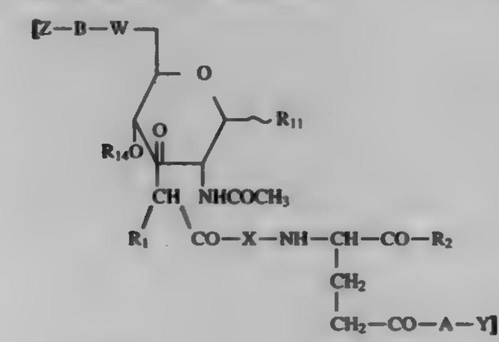

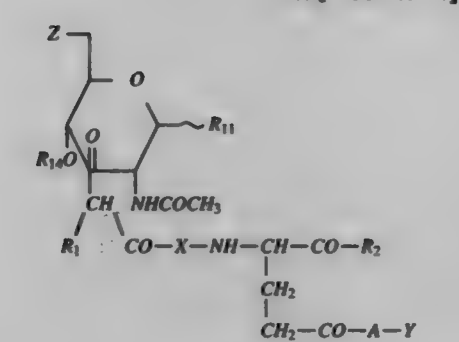

wherein:

R_1 is —H or —CH_3;

R_2 is —NH_2, —OH or —OD, with D being a hydrocarbon group of 1 to 10 carbon atoms;

R_{11} is [—H or a phenylamino groups] *—OH*;

R_{14} is —H or an acyl group of 1 to 4 carbon atoms;

X is an aminoacyl residue which is selected from the group consisting of alanyl, valyl, isoleucyl, norleucyl, leucyl, seryl, threonyl, prolyl, glutaminyl, asparaginyl, methionyl, tryptophanyl, phenylalanyl, tyrosyl and glycycl and which may be N-substituted by a lower alkyl group;

Y is —NH_2, —OH, —OD or a [—OCH_2—$CHO(R_3)CH_2O(R_4)$] *—OCH_2—$CH(OR_3)CH_2O(R_4)$* lipophile group in which a hydrogen on a methylene in its glyceryl group may be replaced by a lower alkyl group; R_3 and R_4 being identical or different and being individually an acyl or alkyl group of 8 to 100 carbon atoms *and D is as defined above*;

Z is —NH_2, —OH, —OD or a [—CO—$CHO(R_3)CH_2O(R_4)$] *—OCO—$CH(OR_3)CH_2O(R_4)$*, lipophile group in which a hydrogen on a methylene in its glyceryl group may be replaced by a lower alkyl group; Y or Z or both being a lipophile group *and D is as defined above*;

[W is —O— or, when Z is a lipophile group, —NH—; and]

A [and B are] *is* either *a* direct linkage[s] or *a* bridging arm[s] which [are identical or different and which] comprise*s* [individually] one to three aminoacyl residues, themselves identical or different from one another, said aminoacyl residues being selected from the group consisting of alanyl, valyl, isoleucyl, norleucyl, leucyl, seryl, threonyl, prolyl, glutaminyl, asparaginyl, methionyl, tryptophanyl, phenylalanyl, tyrosyl and glycyl and which may be N-substituted by a lower alkyl group, or a —NH—$(CH_2)_2$—O— group;

a hydrogen on a methylene in a glutamyl group of said muramylpeptide being replaceable by a lower alkyl group.

Re. 35,707

APPARATUS FOR DRIVING MEDICAL APPLIANCES

Sanshiro Takamiya, Nagoya; Michisuke Yoshizawa, Tokyo, and Akira Suzuki, Nishio, all of Japan, assignors to Aisin Seiki Kabushiki Kaisha, Kariya, Japan

Original No. 4,556,997, dated Dec. 10, 1985, Ser. No. 594,639, Mar. 29, 1984. Continuation of Ser. No. 131,164, Dec. 10, 1987, abandoned. Application for reissue Oct. 27, 1989, Ser. No. 427,996

Claims priority, application Japan, Mar. 29, 1983, 58-52853; Mar. 29, 1983, 58-52854; Mar. 29, 1983, 58-52855; Mar. 29, 1983, 58-52856; Mar. 29, 1983, 58-52857

Int. Cl.^{6} A61F *1/24*

U.S. Cl. 623—3 **29 Claims**

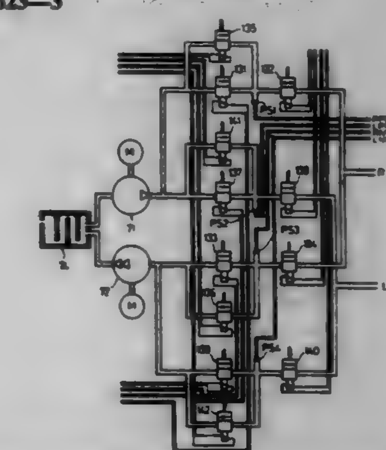

22. An apparatus for driving a medical appliance comprising:

a positive pressure source;

a first solenoid valve having an input terminal connected to an output terminal of said positive pressure source;

a first pressure detecting means for detecting the pressure at an output terminal of said first solenoid valve;

a second solenoid valve having an input terminal connected to the output terminal of said first solenoid valve and an output terminal adapted to be connected to said medical appliance;

a negative pressure source;

a third solenoid valve having an input terminal connected to an output terminal of said negative pressure source;

a second pressure detecting means for detecting the pressure at an output terminal of said third solenoid valve;

a fourth solenoid valve having an input terminal connected to the output terminal of said third solenoid valve and an output terminal adapted to be connected to said medical appliance;

a fifth solenoid valve having an input terminal connected to said positive pressure source and an output terminal connected to the output terminal of said first solenoid valve; and

first electronic control means adapted to control opening and closing of said first solenoid valve in response to an output signal from said first pressure detecting means, control opening and closing of said third solenoid valve in response to an output signal from said second pressure detecting means, control opening and closing of said second and fourth solenoid valves at predetermined timings, respectively, and to control opening and closing of said fifth solenoid valve according to predetermined timing in synchronous relation with operation of said second solenoid valve.

PLANT PATENTS

GRANTED DECEMBER 30, 1997

Illustrations for plant patents are usually in color and therefore it is not practicable to reproduce the drawing.

10,164
MINIATURE ROSE PLANT NAMED 'POULTIN'
Mogens N. Olesen, and Pernille Olesen, both of Fredensborg, Denmark, assignors to Bear Creek Gardens, Inc., Medford, Oreg.
Filed Feb. 21, 1996, Ser. No. 606,893
Int. Cl.⁶ A01H *5/00*
U.S. Cl. Plt.—9 **1 Claim**

1. A new and distinct variety of rose plant of the miniature class, substantially as herein shown and described, characterized particularly as to novelty by the combination of dark green glossy foliage; long shelf life; ease of propagation by softwood cuttings; attractive bright pink flowers; and vigorous compact growth.

10,165
APRICOT TREE 'SUAPRISEVEN'
Carlos D. Fear, Aptos; Bruce D. Mowrey, La Selya Beach, and David W. Cain, Bakersfield, all of Calif., assignors to Sun World, Inc., Bakersfield, Calif.
Filed Aug. 8, 1996, Ser. No. 694,186
Int. Cl.⁶ A01H *5/00*
U.S. Cl. Plt.—39 **1 Claim**

1. A new and distinct variety of apricot tree 'Suapriseven' as herein illustrated and described.

10,166
DOGWOOD TREE 'COMCO NO. 1'
Hubert A. Nicholson, deceased, late of Decherd, Tenn., by Mary J. Nicholson, executor, assignor to Commercial Nursery Co., Inc., Decherd, Tenn.
Filed Dec. 18, 1995, Ser. No. 463,024
Int. Cl.⁶ A01H *5/00*
U.S. Cl. Plt.—53.2 **1 Claim**

1. A new and distinct variety of dogwood plant characterized particularly as to novelty by the flowering bracts of overall strong red color with white central areas and white apical notches, distinct purplish red new growth, and resitance to powdery mildew in open field conditions as compared with other cultivars.

10,167
CLEMATIS PLANT NAMED 'EVITWO'
Raymond J. Evison, Guernsey, Great Britain, assignor to Poulsen Roser International S.A.R.L., Gaillac, France
Filed Apr. 4, 1996, Ser. No. 627,507
Int. Cl.⁶ A01H *5/00*
U.S. Cl. Plt.—54.1 **1 Claim**

1. A new and distinct variety of clematis plant named 'Evitwo' as herein shown and described.

10,168
SAINTPAULIA PLANT NAMED 'HALO'
John Van Wingerden, Oberlin, Ohio, assignor to Green Circle Growers, Inc., Oberlin, Ohio
Filed Jun. 28, 1996, Ser. No. 671,570
Int. Cl.⁶ A01H *5/00*
U.S. Cl. Plt.—69.1 **1 Claim**

1. A new and distinct Saintpaulia plant named 'Halo', as illustrated and described.

10,169
SAINTPAULIA PLANT NAMED 'SUNBEAM'
John Van Wingerden, Oberlin, Ohio, assignor to Green Circle Growers, Inc., Oberlin, Ohio
Filed Aug. 8, 1996, Ser. No. 694,151
Int. Cl.⁶ A01H *5/00*
U.S. Cl. Plt.—69.1 **1 Claim**

1. A new and distinct Saintpaulia plant named 'Sunbeam', as illustrated and described.

10,170
SAINTPAULIA PLANT NAMED 'RADIANCE'
John Van Wingerden, Oberlin, Ohio, assignor to Green Circle Growers, Inc., Oberlin, Ohio
Filed Jun. 24, 1996, Ser. No. 673,759
Int. Cl.⁶ A01H *5/00*
U.S. Cl. Plt.—69.2 **1 Claim**

1. A new and distinct Saintpaulia plant named 'Radiance', as illustrated and described.

10,171
NEW GUINEA IMPATIENS NAMED 'BFP-698 CHERRY'
Scott C. Trees, Arroyo Grande, Calif., assignor to Ball Horticulture Company, West Chicago, Ill.
Filed Sep. 27, 1996, Ser. No. 718,702
Int. Cl.⁶ A01H *5/00*
U.S. Cl. Plt.—87.6 **1 Claim**

1. A new and distinct cultivar of New Guinea Impatiens plant named 'BFP-698 Cherry', substantially as herein shown and described, which:

(a) exhibits attractive large bright cherry red flowers,
(b) forms glossy dark green foliage,
(c) exhibits a good basal branching character, and
(d) exhibits a compact upright growth habit.

PATENTS

GRANTED December 30, 1997

ERRATA

For CLASS	See PATENT NO.
160–180	5,701,813
116–028	5,701,838
215–301	5,702,019
235–462	5,702,059
604–096	5,702,439
371–005	5,703,409
345–184	5,704,037

179–255 O.G.–97–2: QL3

PATENTS

GRANTED DECEMBER 30, 1997

GENERAL AND MECHANICAL

5,701,605
AUTO BIB WITH INTEGRAL TRAY PORTION
Gary S. Bowen, 20 Southbury Rd., Cumberland, R.I. 02864
Filed Mar. 24, 1995, Ser. No. 410,215
Int. Cl.⁶ A41B *13/10;* A41D *13/04*
U.S. Cl. 2—49.1 **19 Claims**

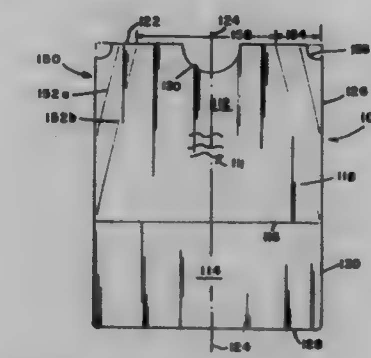

1. A foldable bib comprising:
a flat relatively stiff sheet having a long axis and a width;
said flat sheet including a transverse fold line disposed transverse to the long axis and extending across the width of the sheet so as to divide said flat sheet into upper and lower portions;
wherein said upper portion is defined by two side edges and a top edge, said upper portion top edge having an arcuate section disposed about the long axis and forming part of an aperture in said flat sheet; and
wherein said flat sheet further includes, in said upper portion, at least two angled fold lines proximate each upper portion side edge and being parallel to each other to from a foldable wing, where each fold line is at an angle with respect to each upper portion side edge.

5,701,606
FIREFIGHTER GARMENT WITH CLOSED-CELL FOAM LINER
Donald Aldridge, New Carlisle, Ohio, assignor to Lion Apparel, Inc., Dayton, Ohio
Filed Sep. 10, 1993, Ser. No. 119,473
Int. Cl.⁶ A41D *13/00*
U.S. Cl. 2—81 **17 Claims**

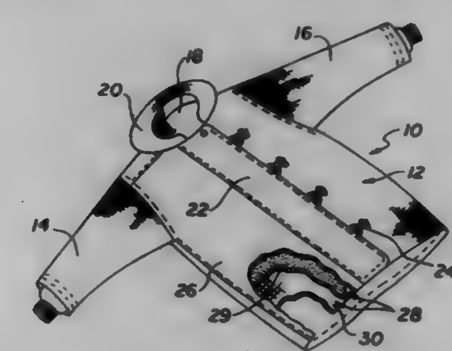

1. A method of manufacturing a firefighter garment comprising the steps of:
providing an outer shell of flame retardant and abrasion resistant material;
providing an inner liner of a closed-cell foam material attached to a substrate, a combination of said substrate and said foam material being sufficiently fire retardant such that said combination resists melting, dripping, separating and igniting when exposed to temperatures of 500° F. for at least 5 minutes for use in a firefighter garment; and
inserting said inner liner within said outer shell.

5,701,607
OVERLAY FOR CAP BILL OR VISOR
Paul Kaiser, 557 Acacia Ave., San Bruno, Calif. 94066
Continuation-in-part of Ser. No. 336,505, Nov. 9, 1994, abandoned. This application Apr. 16, 1996, Ser. No. 639,032
Int. Cl.⁶ A42B *1/18*
U.S. Cl. 2—209.13 **18 Claims**

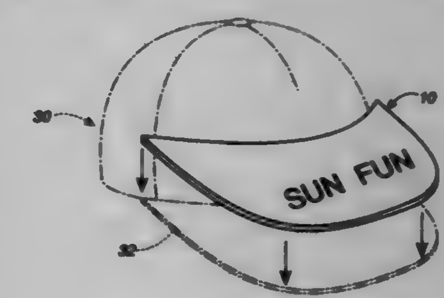

1. An overlay which can be attached to and detached from the brim of a cap, the overlay comprising:
(a) a base, made of flexible material and having a substantially crescent shape with two flat surfaces and an edge extending around the periphery thereof;
(b) adhesive material affixed to one of the two flat surfaces of the base; and,
(c) removable film attached to the adhesive material.

5,701,608
UNDERGARMENT APPARATUS AND METHOD FOR REDUCING MENSTRUAL CRAMPING
Joel M. Kohn, 1424 Polk St., Apt. #51, San Francisco, Calif. 94109
Continuation-in-part of Ser. No. 143,925, Oct. 27, 1993. This application Aug. 15, 1995, Ser. No. 515,163
Int. Cl.⁶ A41C *1/08;1/12;* A41B *9/00*
U.S. Cl. 2—406 **19 Claims**

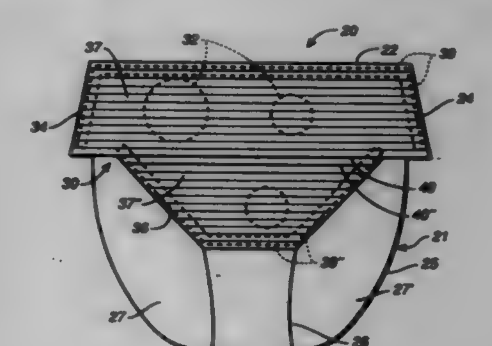

1. An undergarment apparatus for reducing menstrual cramping comprising:
an underpant brief including a circumferential upper edge to be situated at a vertical position proximate the waist of an individual wearer, a front portion and a rear portion each depending downwardly from said upper edge, and a crotch

portion connecting said front portion and said rear portion and defining therewith spaced-apart leg openings separated by said crotch portion;
a front elastic panel mounted to said front portion and a rear elastic panel mounted to said rear portion in a manner exerting inward pressure across the lower torso region of said individual wearer;
at least one freely movable, detached, pressure bearing insert having a backside substantially smaller in area than one of the front elastic panel and rear elastic panel to enable selective placement at a plurality of spaced positions relative one of the front elastic panel and the rear elastic panel between proximate an upper portion of said brief to proximate said crotch portion, said pressure bearing insert having an apex portion formed to face towards said torso region, and the respective front and rear elastic panels cooperating with and substantially contacting said backside of said pressure bearing insert to exert substantial, continuous, localized pressure on an area of menstrual cramping in said torso region for mitigation thereof; and
a mounting device coupling the backside of said insert to said one of the front elastic panel and the rear elastic panel for removable, rotation-free mounting.

5,701,609
PROTECTIVE DRAPE FOR HARD HATS AND THE LIKE
Karin Hoberchak Bridges, 1611 Vinings Pkwy., Smyrna, Ga. 30080
Filed Sep. 18, 1995, Ser. No. 529,367
Int. Cl.⁶ A42B *3/04*
U.S. Cl. 2—422 **9 Claims**

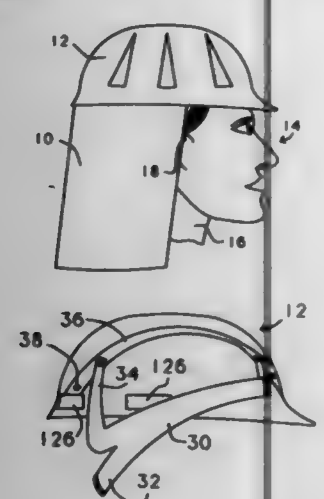

1. An article of protective headgear comprising:
(a) a protective hat consisting of two components, the first component being a hard shell, said hard shell being formed of a solid material, said hard shell having an inner wall and an outer wall, said outer wall being the outermost portion of said protective hat;
(b) the second component of said protective hat being an adjustable internal structure attached to said inner wall, said adjustable internal structure being adapted to adjust to and retain the head of the wearer and to space the back of the head of the wearer away from said inner wall;
(c) a retaining means attached to said inner wall, said retaining means being separate from and displaced from said internal structure and being completely within said hat; and
(d) a drape comprised of a cloth material having an attachment means affixed to an edge thereof, said attachment means being selected to be selectively attached to said retaining means, whereby said drape may be selectively attached to said protective hat, and whereby said attachment means remains separate and displaced from said internal structure.

5,701,610
SPORT CAP
Wen-Chung Hsu, No.250-31, Lin 15, Chung-San Tsung, Ren-Der Hsiang, Tainan Hsien, Taiwan
Filed Feb. 11, 1997, Ser. No. 798,600
Int. Cl.⁶ A42B *3/04*
U.S. Cl. 2—425 **1 Claim**

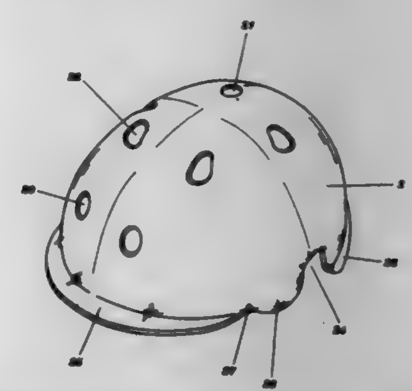

1. A sport cap comprising: a body; a plurality of eyelets formed respectively in a front portion and in a rear portion of said body; a top eyelet in a top of said body; a plurality of air holes in said body located in a spaced array around said top eyelet; a protector formed respectively in a right and a left side of said body projecting downwardly from said body; an opening formed adjacent to a rear of said protectors; a front visor extending forward from said body; a bent edge formed along a curved side of said rear portion of said body; and a protective edge formed along a lower periphery of said body.

5,701,611
PROTECTIVE PAD CONSTRUCTION
James L. Rector, Vienna, W. Va., and Edward H. Tobergte, Fairfield, Ohio, assignors to Ed Tobergte Associates, Inc., Fairfield, Ohio
Filed Dec. 5, 1995, Ser. No. 567,547
Int. Cl.⁶ A41D *13/00*
U.S. Cl. 2—455 **8 Claims**

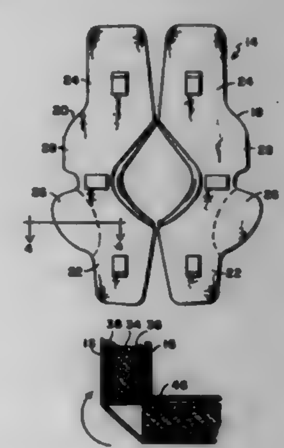

1. An athletic protective pad, comprising:
a foam body composed of a layer of open cell foam and first and second layers of closed cell foam secured to opposing surfaces of said layer of open cell foam, said layers presenting a sandwich configuration;
means for partially sealing said foam body to control the release of air upon impact thereof, said means secured around said foam body's periphery;
said layer of open cell foam having a first thickness and each of said layers of closed cell foam having a second thickness; and

said first thickness being approximately 1.5 to 2.0 times said second thicknesses to maximize the trapped air content within said layer of open cell foam;
said first thickness and said means for partially sealing maximizing impact resistance.

5,701,612
URINAL CONTAINER HAVING INTERNAL PARTITIONS AND MOTOR-POWERED SUCTION DEVICE
Yousef Daneshvar, 21459 Woodfarm, Northville, Mich. 48167
Continuation-in-part of Ser. No. 251,503, May 31, 1994, which is a continuation-in-part of Ser. No. 877,430, May 1, 1992, abandoned. This application Jun. 7, 1995, Ser. No. 487,297
Int. Cl.⁶ A47K *11/12*
U.S. Cl. 4—144.3 **11 Claims**

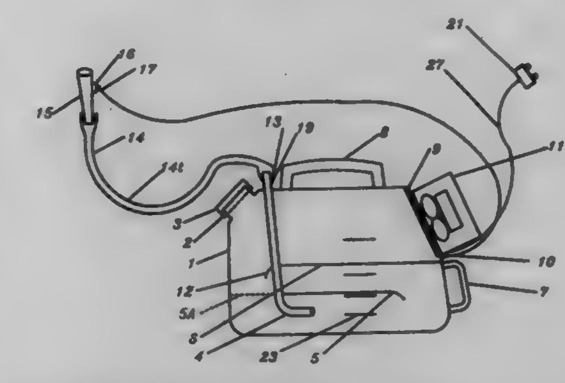

1. A urinal comprising a collection device for placement proximate genitalia to receive urine from a person, a container for collection of urine, tubing from the collection device to the container for conveying urine from the collection device to the container, means for sucking urine from the collection device so as to cause the urine to pass through the tubing and into the container, characterized in that said container comprises a bottom wall and an internal partition spaced above said bottom wall so that both the bottom wall and the partition define a bottom zone of the container that is in communication with an overlying zone by virtue of said partition not completely enclosing the bottom zone, and in that said tubing discharges urine into the container at a location in said bottom zone that is below an imperforate portion of said partition, and in which said container has an opening which is above said partition proximate a sidewall portion of the container and communicates with said overlying zone and via which urine may be poured out of the container when the container is tipped, and said partition comprises a perforate zone proximate said sidewall portion for allowing urine in the bottom zone to pass through said partition and along said sidewall portion toward said opening as the container is being tipped to empty urine from it.

5,701,613
SWIMMING POOL COVER ASSEMBLY
Cedric D. Richardson, 1401 Redford Apt. 1302-B, Houston, Tex. 77034
Filed Dec. 22, 1995, Ser. No. 577,702
Int. Cl.⁶ E04H *4/00*
U.S. Cl. 4—502 **13 Claims**

1. A new and improved combined swimming pool cover and rollup apparatus comprising:
a flexible cover for substantially covering a water surface of said swimming pool, said flexible cover comprising:
a plurality of hinge rods; and
a plurality of flexible sections, each said section having a plurality of integral conduits centrally distributed along opposing edges to matably interleave with an opposing

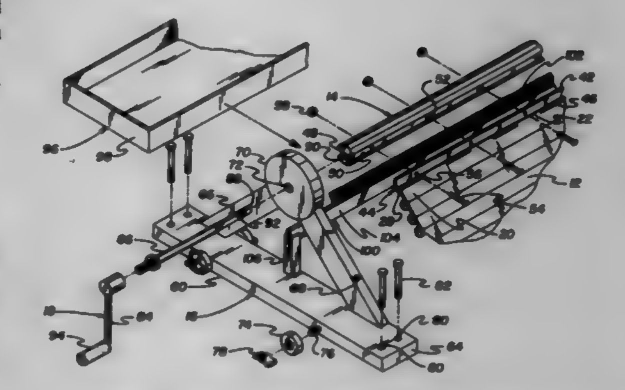

section to form a single elongated hinge sleeve, each said hinge sleeve for receiving one of said plurality of hinge rods for pivotally attaching said flexible sections together to form said flexible cover;
a rotatable elongated roller having an end of said flexible cover attached thereto;
portable support means for selectively supporting said elongated roller proximate an edge of said swimming pool;
a debris collection means for cleaning debris off of said flexible cover during a rolling thereof about said elongated roller and for collecting said debris for later disposal after said cover has been cleaned, said debris collection means further including a debris collection pan removably positionable beneath said elongated roller;
a debris deflector positioned in a juxtaposed relationship to said elongated roller, whereby a surface of said flexible cover to be cleaned will be continuously drawn over said debris deflector during a rolling of said flexible cover about said elongated roller, thereby to removably deflect debris from said flexible cover during said rolling; and
handle means attached to said elongated roller and being operable to effect a rotational movement of said elongated roller to roll and unroll said flexible cover thereabout, whereby debris deflected from said flexible cover by said debris deflector is collected in said debris collection pan.

5,701,614
INVALID BATH
David E. Appleford; Brian W. Lane, both of Essex, and Alan D. Webb, Kent, all of England, assignors to Alpha Thames Engineering Limited, England
PCT No. PCT/GB94/01578, § 371 Date Oct. 15, 1996, § 102(e) Date Oct. 15, 1996, PCT Pub. No. WO95/02982, PCT Pub. Date Feb. 2, 1995
PCT Filed Jul. 21, 1994, Ser. No. 586,751
Claims priority, application United Kingdom, Jul. 21, 1993, 9315094
Int. Cl.⁶ A47K *3/02*
U.S. Cl. 4—555 **10 Claims**

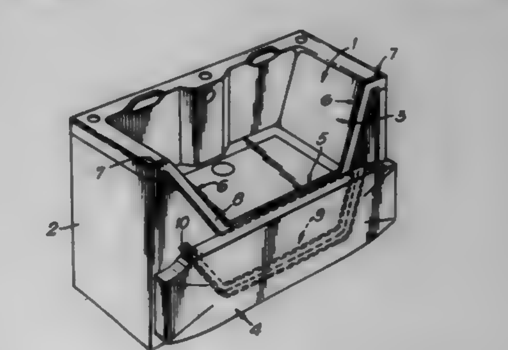

1. A bath particularly for use by an elderly or disabled person, the bath having a body with a side shaped so as to form an

opening, a movable door arranged to close the opening and a sealing arrangement for sealing between the opening and the door, which comprises confronting surfaces between which sealing means is interposed and each of which is connected to one of the body and the door and are configured to be urged sealingly together by sliding of the door into the closed position, wherein substantially the entire door is situated below a water accommodating region of the body when fully opened and translation of the door substantially within its own plane effects closure of the opening and sealing between the confronting surfaces wherein the confronting surfaces are constituted by a first surface connected to the bath around the opening and a second surface connected to an inwardly facing surface of the door, and the confronting surfaces comprise a channel and a skirt.

5,701,615

SPLASH GUARD FOR USE WHEN BATHING CHILDREN

Michelle R. Baker, 304 Nottaway Dr., Madison Heights, Va. 24572

Filed Oct. 25, 1996, Ser. No. 740,267

Int. Cl.⁶ A47K *3/034;3/12*

U.S. Cl. 4—559 **4 Claims**

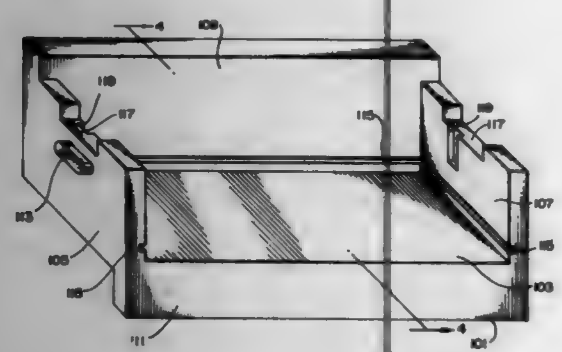

1. A splash guard for a bathtub, comprising:

a bathing module and a storage module,

said bathing module,

having a bottom surface having an inner edge, an outer edge, and two side edges;

a back having an upper edge, a lower edge, two side edges, an inner surface, and an outer surface, connected at said lower edge proximate the outer edge of the bottom surface, said back extending substantially upward,

a first side and a second side, each having an upper edge, a lower edge, two side edges, and an inner surface and an outer surface, each connected proximate its lower edge to one of the side edges of the bottom surface, said first side and second side each connected at one of said side edges to a side edge of the back, said first and second sides extending substantially upward,

a lip, having a first long edge, a second long edge, and two side edges, said lip connected at said first long edge to the inner edge of said bottom surface, said lip extending substantially downward, whereby said bottom surface, said back, and said inner surfaces of said first and second sides define a partially enclosed space which traps water during bathing;

said storage module

having a bottom surface having an inner edge, an outer edge, and two side edges;

a back having an upper edge, a lower edge, and two side edges, connected at said lower edge proximate the outer edge of the bottom surface, said back extending substantially upward,

a first side and a second side, each having an upper edge, a lower edge, two side edges, and an inner surface and an outer surface, each connected proximate its lower edge to one of the side edges of the bottom surface, said first side and second side each connected at one of said side edges to a side edge of the back, said first and second sides extending substantially upward,

said bottom surface having water drainage means,

whereby said bottom surface, said back, and said inner surfaces of said first and second sides define a partially enclosed space; and

an extension member attached proximate the lower edge of each of said first and second sides of said storage module, said extension members extending substantially outward from the lower portion of each of said first and second sides of said storage module.

5,701,616

LOAD-BEARING SCAFFOLD FOR BEDS AND THE LIKE

Terry L. Rosenquist, 835 Hewitt St., Hastings, Nebr. 68901

Filed Mar. 20, 1995, Ser. No. 406,741

Int. Cl.⁶ A47C *19/20*

U.S. Cl. 5—8 **12 Claims**

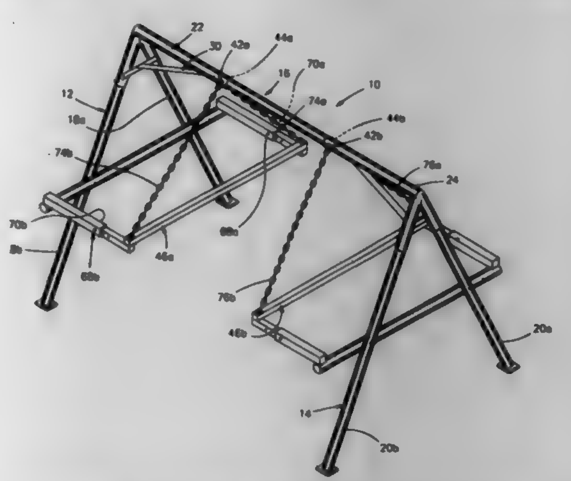

1. A load-bearing scaffold for placement on the floor of a room for supporting articles comprising:

first and second generally upright load-bearing support structures, each having upper sections and bases and each comprising a pair of downwardly depending legs;

only one generally horizontal beam having opposite ends, one of said ends removably mounted to said upper section of said first support structure, the other of said ends removably mounted to said upper section of said second support structure;

at least one elongated generally horizontal platform means including elongated inner and outer sides and shorter ends connected to and extended between said inner and outer sides, said outer side removably mounted to both depending legs of only one of said first and second support structures intermediate said horizontal beam and said base of said support structure whereby said inner and outer sides are arranged generally perpendicular to said generally horizontal beam; and

at least two tension members extending between and connected to said horizontal beam and said platform means, said tension members depending adjacent said inner side of said platform means whereby said platform means is suspended above the floor of a room.

5,701,617

ABSORBENT BEDSHEET

Gerard Joseph Colby, 326 Lonicera Ct., Wilmington, N.C. 28405

Filed Mar. 21, 1997, Ser. No. 821,909

Int. Cl.⁶ A47G *9/04*

U.S. Cl. 5—484 **7 Claims**

1. A moisture-resistant bedsheet for placement on a bed having a given width and a given length comprising:

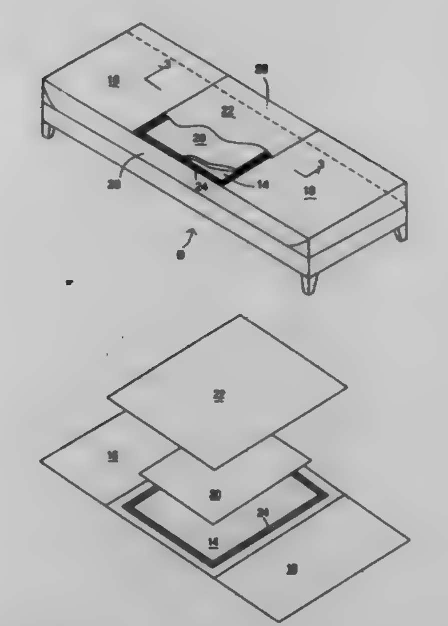

a) a bottom sheet component having water-permeable upper and lower textile sections, and a moisture-resistant center section between the upper and lower sections;

b) hook and loop fastener attachment means adjacent at least two opposed edges of the moisture resistant center section;

c) a moisture absorbent pad on the center section between the attachment means; and

d) a water-permeable textile cover sheet component over the pad and the center section, the cover sheet component being secured to the bottom sheet component by hook and loop fastener attachment means secured to its lower surface adjacent its edges, whereby the hook and loop fastener sections of the bottom sheet component and the cover sheet component are joined to secure the cover sheet component in place, hiding the moisture-resistant section, and holding the moisture absorbent pad in position.

5,701,618

HYDRAULIC SYSTEM FOR HYDRAULICALLY ACTUATING AN AMBULANCE LIFTING TABLE

Klaus Brugger, Max-Josef-Strasse 2, 83684 Tegernsee, Germany

PCT No. PCT/EP94/03724, § 371 Date Apr. 24, 1996, § 102(e) Date Apr. 24, 1996, PCT Pub. No. WO95/13043, PCT Pub. Date May 18, 1995

PCT Filed Nov. 10, 1994, Ser. No. 632,482

Claims priority, application Germany, Nov. 11, 1993, 9317306 U

Int. Cl.⁶ A61G *7/05;3/00*

U.S. Cl. 5—611 **12 Claims**

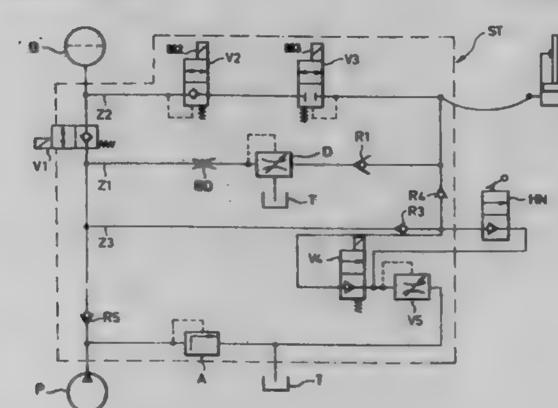

1. A hydraulic system for hydraulically actuating a vertically adjustable ambulance lifting table used for receiving thereon a stretcher and adapted to be selectively switched to a cushioned mode of operation, said hydraulic system comprising:

a cylinder for actuating the lifting table,

a hydraulic accumulator for cushioning the lifting table,

a pump,

a three-way valve in fluid connection with the pump and the hydraulic accumulator on the inlet side thereof and with the cylinder on the outlet side thereof, the three-way valve limiting the amount of fluid that can be supplied to the cylinder,

a discharge valve means connected to a reservoir of the hydraulic system on the outlet side thereof, the discharge valve means being connected to the hydraulic accumulator on its input side, and

a valve means provided between the cylinder on the one hand and the hydraulic accumulator on the other, said valve means being controllable such that it assumes an open position only if the pressure in the hydraulic accumulator exceeds the pressure within the cylinder by not more than a predetermined pressure difference.

5,701,619

STRETCHER

Johan Ullman, Johannebergsgatan 32 B, S-412 55 Göteborg, Sweden

PCT No. PCT/SE94/00702, § 371 Date Mar. 28, 1996, § 102(e) Date Mar. 28, 1996, PCT Pub. No. WO95/03026, PCT Pub. Date Feb. 2, 1995

PCT Filed Jul. 21, 1994, Ser. No. 581,619

Claims priority, application Sweden, Jul. 21, 1993, 9302461

Int. Cl.⁶ A61G *1/00;1/044;1/048*

U.S. Cl. 5—625 **4 Claims**

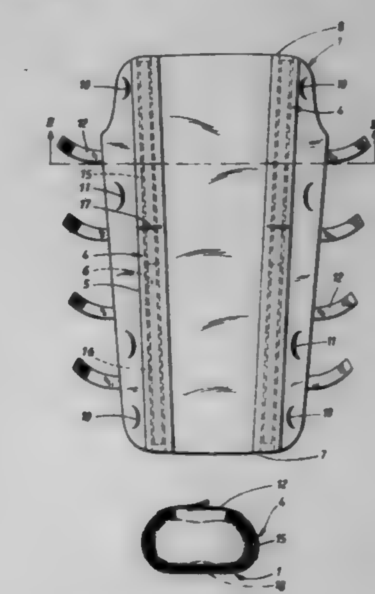

1. A stretcher comprising:

a sheet of a semi-rigid cellular material and having homogeneous surface layers;

a plurality of hand grips in the form of recesses arranged along the edges of the sheet for carrying; and

a pair of longitudinal channels running along each side of a middle portion of said sheet, said channels being adapted to receive stiffening elements having a flat cross-section with a substantially larger width than thickness, said middle portion

having such a width so as to envelop a portion of the body of a person lying in said middle portion upon said stretcher being lifted by said hand grips, whereby said channels are delimited in a manner so as to be located substantially vertically when the stretcher is carried by said hand grips, and is arranged so that said stiffening elements are held with their cross-sections on edge when the stretcher is lifted, wherein

said stiffening elements are divided lengthwise into sections which are arranged to overlap with their ends in their respective channels, so that stiffness against bending is maintained in spite of being divided into sections when the elements are kept on their edges in their respective channel.

5,701,620

APPARATUS FOR MAKING TWO TWIN/SINGLE MATTRESSES USABLE AS ONE MATTRESS SYSTEM

S. Sam Montross, 1015 Forest Ct., Palo Alto, Calif. 94301

Filed Jan. 6, 1997, Ser. No. 779,123

Int. Cl.^{6} A47C *21/00;31/00*

U.S. Cl. 5—658 **20 Claims**

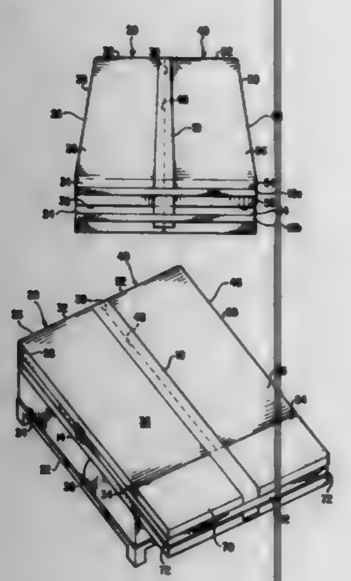

1. A mattress joining apparatus for releasably securing an existing first bed having a first mattress and a n existing second adjacent bed having a second mattress, the first and second mattresses joined together in side-by-side relation, comprising: a pliable seam protector having a first end and a second end, the length between the first end and the second end sized to extend beyond the length of the first and second mattress; the seam protector having a width sized to cover a seam formed by adjacent sides of the first mattress and the second mattress; a first mattress strap secured to the first end of the pliable seam protector, and a second mattress strap secured to the second end of the pliable seam protector, the first and second mattress straps sized to extend about the outer periphery of the first and second adjacent mattresses; and an adjustable fastening means to releasably secure the first mattress strap to the second mattress strap about the outer periphery of the first and second adjacent beds.

5,701,621

LINER FOR OVERLAYING A MATTRESS

Curtis L. Landi, and Susan L. Wilson, both of Sunnyvale, Calif., assignors to Supracor Systems Corporation, San Jose, Calif.

Continuation-in-part of Ser. No. 80,745, Jun. 22, 1993, Pat. No. 5,444,881, which is a continuation-in-part of Ser. No. 974,474, Nov. 12, 1992, abandoned, which is a continuation-in-part of Ser. No. 717,523, Jun. 19, 1991, Pat. No. 5,180,619, which is a continuation-in-part of Ser. No. 446,320, Dec. 4, 1989, Pat. No. 5,039,567. This application Jul. 21, 1994, Ser. No. 278,181

Int. Cl.^{6} A47C *27/00;27/08;* **B32B** *3/12*

U.S. Cl. 5—691 **20 Claims**

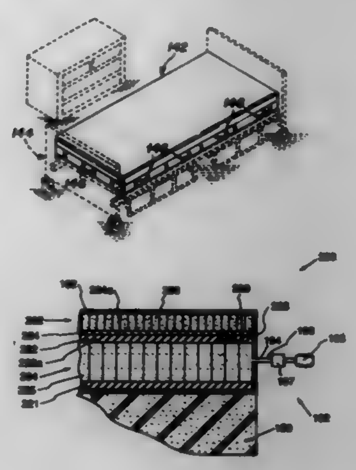

1. An improved mattress pad or liner comprising:
a first panel including
i) a first rectangularly shaped honeycomb core formed of undulated strips of resilient thermoplastic material, thermal compression bonded together and expanded to form cell walls defining a plurality of contiguous regularly shaped cells;
ii) first means for maintaining said first core in its expanded configuration so that it can anisotropically flex to stabilize and spread a load applied thereto; and
iii) casing means for encasing said first core and said maintaining means.

5,701,622

PULSATING OPERATING TABLE CUSHION

John Biggie, and Lydia B. Biggie, both of Lighthouse Point, Fla., assignors to Sentech Medical Systems, Inc., Fort Lauderdale, Fla.

Filed Jan. 16, 1996, Ser. No. 586,997

Int. Cl.^{6} A61G *7/04;13/00*

U.S. Cl. 5—713 **4 Claims**

1. A surgical operating table cushion for placement on a surgical operating table for reducing the formation of decubitus ulcers during long operations, comprising:
a plurality of inflatable air cells forming an air cell array, said plurality of inflatable air cells forming two groups of interconnected inflatable air cells respectively communicating with each other, the cells in one of the groups being disposed between adjacent ones of the cells in the other group, wherein air pressure within each group of air cells is substantially equal;
means for inflating and deflating each of said two groups of air cells, said means for inflating and deflating comprising:
a first conduit connected to a first one of said two groups;
a second conduit connected to a second one of said two groups;
a pump for providing pressurized air, said pump coupled to said first conduit and said second conduit;

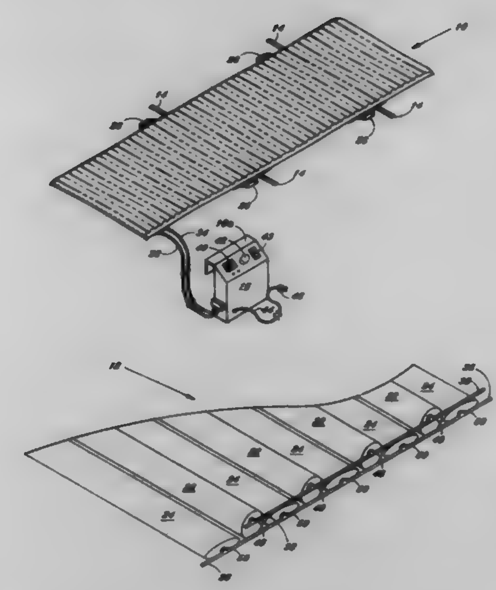

an air inlet valve connected to said pump and said first conduit and said second conduit, said valve having at least a first operative position and a second operative position, whereby when in said first position, said valve allows pressurized air to flow only to said first conduit from said pump, and when in said second position, said valve allows pressurized air to flow only to said second conduit from said pump;
control means for controlling operation of said means for inflating and deflating, said means for controlling including a static mode wherein said plurality of inflatable air cells remain at least partially inflated for a preselected period of time to prevent movement of said surgical operating table cushion due to inflation and deflation of said inflatable air cells;
means for housing said control means and said means for inflating and deflating, said means for housing including means for removable attachment to the surgical operating table;
means for securing said cushion to said surgical operating table; and,
a bottom sheet, wherein said bottom sheet and said plurality of air cells are made of the same material, each air cell being connected to said bottom sheet.

5,701,623

COMPOSITE MATTRESS AND MATTRESS TOPPER HAVING A LATEX FOAM CORE

Jonathan J. May, Guilford, Conn., assignor to Latex Foam Products, Inc., Ansonia, Conn.

Continuation-in-part of Ser. No. 613,970, Mar. 11, 1996, abandoned. This application Jun. 17, 1996, Ser. No. 664,767

Int. Cl.^{6} A47C *27/15*

U.S. Cl. 5—739 **7 Claims**

1. A bedding such as a mattress or topper comprising:
a generally rectangular core having perimeter sides, a width, length, thickness and volume, said core consisting essentially of latex foam rubber having a density of between about 2 lbs. per cubic foot and about 6 lbs. per cubic foot;
a border formed of two border side sections having a thickness and a volume, said border side sections being affixed to head and foot perimeter sides of the core, said border side sections comprising urethane foam and having a density of between about 1 and about 4 lbs. per cubic foot, said thickness of said border side sections being approximately the thickness of said core; and

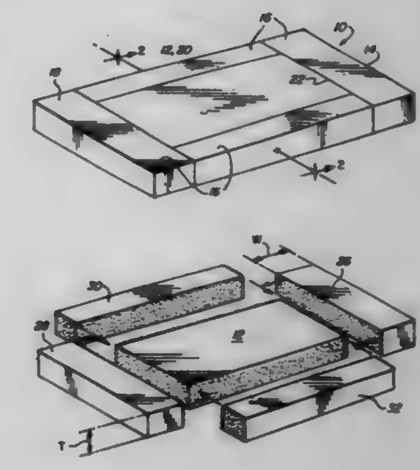

the border volume comprising at least about 15 percent of the total volume of said core and said border.

5,701,624

METHOD OF OPERATING A CLOTHES WASHER IN COLD WEATHER

Hyun-Doo Shin, Seongnam; Sung-O Jo, Seoul, and Eon-Ju Nahm, Anyang, all of Rep. of Korea, assignors to Samsung Electronics Co., Ltd., Suwon, Rep. of Korea

Filed Aug. 14, 1996, Ser. No. 696,502

Claims priority, application Rep. of Korea, Oct. 7, 1995, 95-34441

Int. Cl.^{6} D06F *33/02*

U.S. Cl. 8—159 **2 Claims**

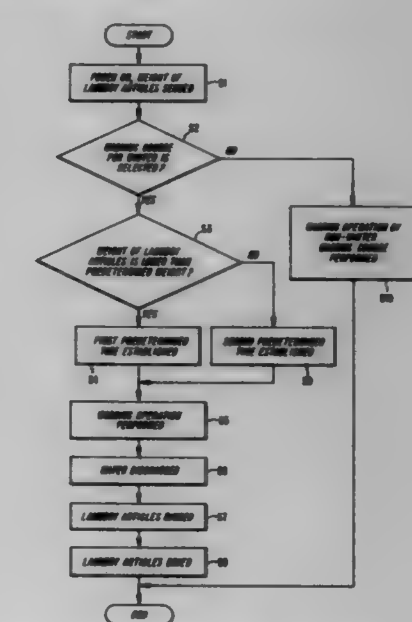

1. A method of controlling a washing machine including the steps of:
A) determining whether or not a washing mode for winter is selected;
B) determining a weight of a load of laundry in a wash tub when the washing mode for winter is selected;
C) washing the laundry load for a first predetermined time period when a weight of the laundry load is lower than a predetermined weight; and
D) washing the laundry load for a second predetermined time period, longer than the first time period, when a weight of the laundry load is not lower than the predetermined weight.

5,701,625
SCRUB CLEANING MACHINE
Walid Siman, 80 Riverbend Rd., Apt. #1D, Stratford, Conn. 06497
Filed Jul. 18, 1995, Ser. No. 503,115
Int. Cl.⁶ A46B *11/00*
U.S. Cl. 15—21.1 **5 Claims**

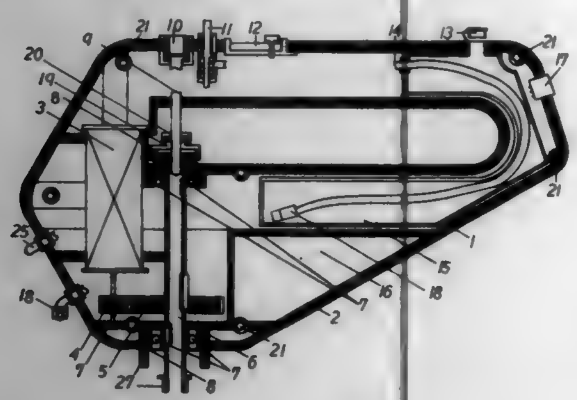

1. A scrub cleaning machine, comprising:
a housing;
a shaft member rotatably mounted within the housing and having a flow passage and an end extending from the housing;
a scrubbing member attached to the end;
means associated with the housing for rotating the shaft; and
means associated with the housing for conveying cleaning fluid through the flow passage to the scrubbing member;
wherein the means for conveying cleaning fluid comprises an inlet fitting non-rotatably mounted to the housing, and means for sealably connecting the inlet fitting to the flow passage whereby cleaning fluid can be supplied through the flow passage to the scrubbing member during rotation of the shaft and the scrubbing member, wherein the housing defines a sealed inner space to substantially prevent against fluid ingress, and wherein the means for sealably connecting the inlet fitting to the flow passage is positioned outside of the housing whereby the inner space of the housing is not exposed to fluids should leakage at the means for sealably connecting occur.

5,701,626
BRUSH CLEANING AND DISINFECTING DEVICE
Sebastian Zara, 22 Susan Dr., Marlboro, N.J. 07746, and Anthony Barreca, 2019 W. 9th St., Brooklyn, N.Y. 11223
Filed Jun. 28, 1996, Ser. No. 672,434
Int. Cl.⁶ A46B *17/06*
U.S. Cl. 15—38 **7 Claims**

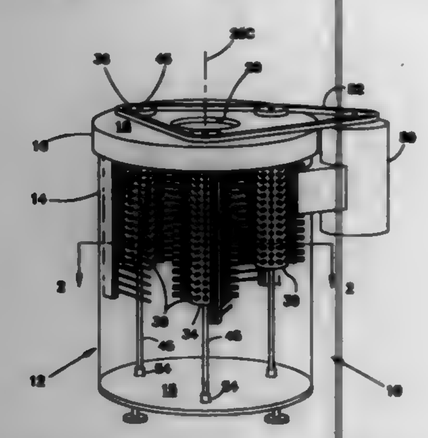

1. A brush cleaning and disinfecting device, for cleaning a brush having a plurality of brush bristles, comprising:
a housing, the housing comprising a lower portion and an upper portion having a top, the lower portion forming a cavity capable of retaining a liquid, the upper portion having a brush receiving aperture capable of allowing the brush to be inserted at least partially downward into the cavity;
the lower portion having a bottom, the bottom having a shaft seat for each cleaning element, each shaft seat accepting the shaft from one of the cleaning elements, allowing the shaft to rotate therein, and allowing the shaft to easily left from the shaft seat when the cleaning elements are being removed to be cleaned themselves;
a brush cleaning means extending inside the lower portion comprising a drive motor which causes the cleaning elements to rotate in the same direction when the brush is inserted into the lower portion, the brush cleaning means including at least three cleaning elements, each cleaning element having a shaft which extends into the upper portion and each shaft having a pulley connected to the drive motor with a common drive belt, arranged circumferentially around an aperture central axis, for engaging the brush circumferentially; and
at least one comb member present in the lower portion, the comb member meshing with at least one of the cleaning elements.

5,701,627
SUBSTRATE PROCESSING APPARATUS
Yoshio Matsumura, and Katsumi Shimaji, both of Hikone, Japan, assignors to Dainippon Screen Mfg. Co., Ltd., Japan
Continuation of Ser. No. 397,486, Mar. 2, 1995, abandoned. This application Sep. 27, 1996, Ser. No. 720,317
Claims priority, application Japan, Mar. 3, 1994, 6-033627
Int. Cl.⁶ B08B *7/04*
U.S. Cl. 15—88.2 **17 Claims**

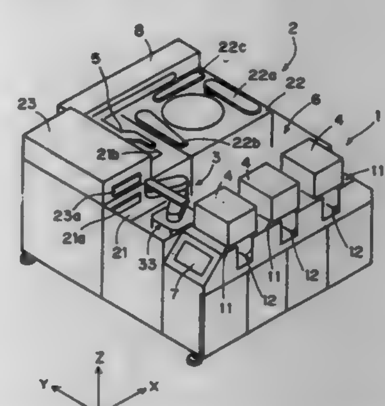

1. A substrate processing apparatus for transporting a plurality of substrates, which are stored in a cassette serially one by one, to a plurality of processing units in which each of a substrate set therein is processed in a respective manner, comprising:
cassette storing means for storing a plurality of cassettes, each of which is capable of storing a plurality of substrates, said plurality of cassettes being arranged in a predetermined direction;
processing means, including a plurality of processing units, for processing the substrate in a predetermined manner, said plurality of processing units being arranged parallel to said predetermined direction; and
transporting means, disposed between said cassette storing means and said processing means, said transporting means including a holding member which transports the substrate stored in said cassette in said cassette storing means to one of the processing units in the processing means and transports the substrate processed by said processing means to the cassette, said holding member being capable of moving along said predetermined direction holding the substrate to be transported and capable of stopping in front of said one of the processing units and in front of said cassette.

5,701,628
MOP HOLDER WITH A QUICK RELEASE LOCKING NUT
Fred I. Morad, Toluca Lake, Calif., assignor to Worldwide Integrated Resources, Inc., Glendale, Calif.
Filed Jul. 26, 1996, Ser. No. 686,532
Int. Cl.⁶ A47L *13/258*
U.S. Cl. 15—150 **29 Claims**

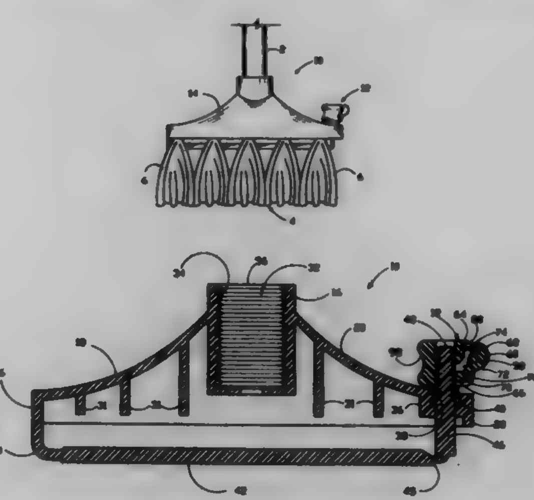

18. A mop holder, comprising:
a. a frame;
b. an elongated clamping member hingeably connected to said frame at one end thereof;
c. a rod member attached to said clamping member at an opposite end and having outer threads;
d. a locking nut having a central slot for accommodating said rod member, the locking nut further having means for attachment to said frame;
e. a spring biased pawl pivotally mounted to said locking nut such that its tip is engagable to said rod member; and
f. said tip of said spring biased pawl further having inner threads threadedly engagable to said outer threads of said rod member for fastening said clamping member;
g. whereby when said pawl is pressed against said spring and its tip is disengaged from said rod member, said locking nut is unlocked and said rod member can be slid out from said locking nut for allowing said clamping member to be released, and when said pawl is biased by said spring and its tip is engaged to said rod member, said locking nut is locked on said rod member for preventing said clamping member from being released so that said clamping member can be fastened, and said locking nut can be rotated to further thread on said rod member to precisely adjust the tightness of said clamping member.

5,701,629
HOLLOW BRUSH BRISTLE WITH RADIATING SPOKES
Timothy D. O'Brien, Crofton, Md., assignor to Speciality Filaments, Inc., Wilmington, Del.
Filed Jul. 19, 1995, Ser. No. 504,114
Int. Cl.⁶ D02G *3/00;* A46B *15/00*
U.S. Cl. 15—207.2 **20 Claims**

1. A brush bristle for an applicator brush, the brush bristle being formed of a polymer and being straight, having a denier of 32–2500 and having a length and a cross section taken across the length, the cross section comprising:
a generally circular central bore having a bore radius;
an annulus having an outer radius, said annulus surrounding the central bore; and
a plurality of spokes extending outwardly from the annulus, each of said spokes including two substantially parallel sides and a rounded tip distal the annulus;

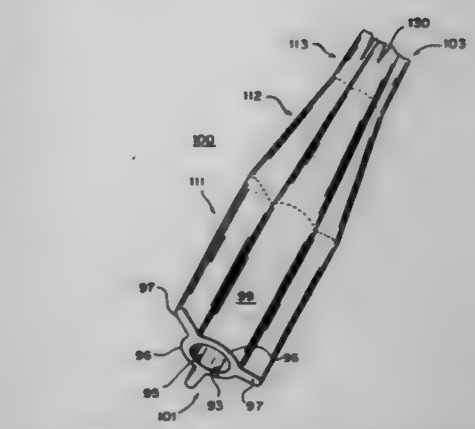

wherein the polymer is substantially oriented in a lengthwise direction, whereby the bristle is optionally flagged at an applicating end thereof; and
wherein each of the spokes extends from the annulus a distance substantially equal to or greater than the bore radius and no greater than the outer radius of said annulus.

5,701,630
MOP WITH A TAPE OF RAGS TAKING UP MECHANISM
Jih-Shun Liao, P.O. Box 82-144, Taipei, Taiwan
Filed Apr. 23, 1996, Ser. No. 636,355
Int. Cl.⁶ A47L *13/20*
U.S. Cl. 15—228 **3 Claims**

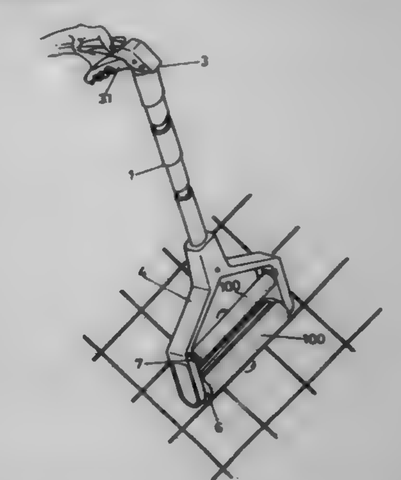

1. A mop comprising a telescopic sleeve, a handle grip coupled to one end of said telescopic sleeve, a mophead holder coupled to one end of said telescopic sleeve remote from said handle grip, a retractable handle mounted in said telescopic sleeve and having a top end inserted into a hole in said handle grip and a bottom end inserted into a hole in said mophead holder, a lever pivoted to said handle grip and coupled to the top end of said retractable handle, a mophead turned about a pivot on said mophead holder, a ratchet transmission mechanism mounted in said mophead holder and coupled to the bottom end of said retractable handle by a steel cable and driven by said lever through said retractable handle and said steel cable to turn said mophead, a tape of rags having a fixed end fixedly secured to said mophead holder and a free end detachably connected to said mophead by a tape of loop and hook materials, said mophead being turned by said ratchet transmission mechanism to take up said tape of rags when said lever is pulled, said ratchet transmission mechanism comprised of a pull arm, a holder frame, a double-end pawl, a ratchet wheel, a first tensile spring, and a second tensile spring, said double-end pawl being turned about a pivot in said mophead holder and having one end supported on said second tensile spring inside a holder frame and an opposite end meshed with said ratchet wheel, said pull arm

having a top end inserted through a hole on a transverse rod in one arm of said mophead holder and coupled to said steel cable and a bottom end connected to said holder frame, said first tensile spring being mounted around said pull arm and stopped between said transverse rod and said holder frame.

5,701,631
COOLING ARRANGEMENT FOR POWER COMPONENTS IN A VACUUM CLEANER
Tommy Lindquist, Farsta, Sweden, assignor to Aktiebolaget Electrolux, Stockholm, Sweden
Filed Oct. 24, 1996, Ser. No. 736,530
Claims priority, application Sweden, Oct. 25, 1995, 9503753
Int. Cl.⁶ A47L *9/28*
U.S. Cl. 15—327.1 **17 Claims**

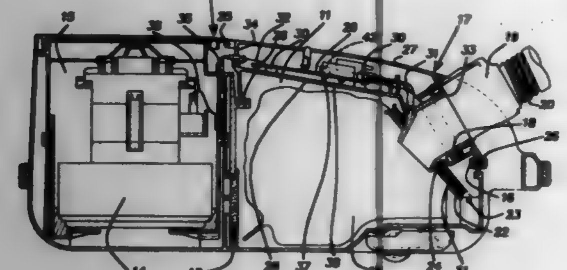

1. A vacuum cleaner comprising a housing (10) in which is disposed an electric circuit, a motor-fan unit (14), and a dust container (12), said dust container being received within a chamber (11) provided within the housing, the chamber being provided with an opening (16) through which the dust container is accessible, said opening normally being closed by a cover (17), wherein at least one heat generating power component (42) is disposed within said cover and the cover (17) includes a heat-transmitting surface (41) which is thermally connected to said at least one heat generating power component (42).

5,701,632
DEBRIS BLOWING APPARATUS
Craig Webster, Jesmond, and John Sadler, Darlington, both of United Kingdom, assignors to Black & Decker Inc., Newark, Del.
Filed Sep. 3, 1996, Ser. No. 711,329
Claims priority, application United Kingdom, Sep. 4, 1995, 9517995
Int. Cl.⁶ A47L *5/14*
U.S. Cl. 15—330 **6 Claims**

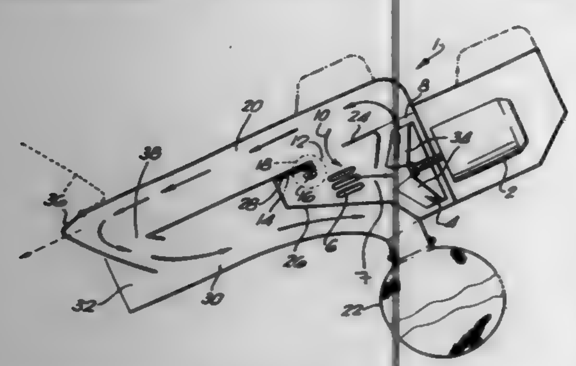

1. A debris blowing apparatus comprising:
a motor;
a fan driven by the motor;
an air inlet to the fan;
an air outlet from the fan;
a metering aperture through which air expelled from the outlet can be recirculated into the air inlet;
an aperture cover for selectively covering the metering aperture;
and a blower duct a first end of which communicates with the air outlet so that air which is not recirculated into the inlet travels along the blower duct and exits from a second working end of the duct.

5,701,633
VACUUM CLEANING DEVICE WITH A SUCTION NOZZLE
Jürgen Jonischus, Romanshorn, Switzerland, assignor to Firma Fedag, Romanshorn, Switzerland
Filed Jun. 26, 1996, Ser. No. 671,400
Claims priority, application Germany, Jun. 28, 1995, 195 22 981.9
Int. Cl.⁶ A47L *5/10;5/26*
U.S. Cl. 15—387 **10 Claims**

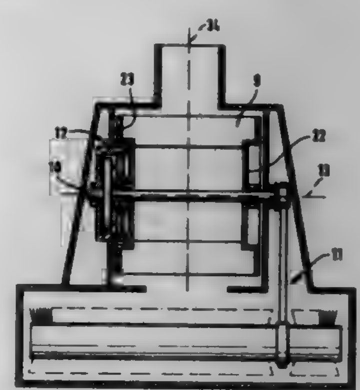

1. A vacuum cleaning device comprising:
a suction nozzle having a housing with an air guide chamber;
said housing comprising an inflow opening;
said suction nozzle having a brush roller rotatably mounted adjacent to said inflow opening inside said housing;
a bearing shaft mounted within said .housing;
an air turbine rotatably supported on said bearing shaft and driven in rotation by a suction air stream generated with said vacuum cleaning device, wherein said bearing shaft has a longitudinal axis and wherein an axis of rotation of said air turbine coincides with said longitudinal axis;
said air turbine rotates at a different rpm than said bearing shaft;
a planetary gear system operatively connected between said air turbine and said bearing shaft;
said planetary gear system positioned at least partially within said air guide chamber within a vicinity of a first axial end face of said air turbine such that said air turbine at least partially axially overlaps said planetary gear system;
a drive member operatively connected to said planetary gear system for driving said brush roller.

5,701,634
GROMMET
Kazuhiro Uemura, and Koji Yamashita, both of Yokkaichi, Japan, assignors to Sumitomo Wiring Systems, Ltd., Japan
Filed Aug. 9, 1996, Ser. No. 695,859
Int. Cl.⁶ F16L *5/00*
U.S. Cl. 16—2.1 **20 Claims**

1. A grommet (1) for sealing an opening in a panel, through which at least one cable passes, said grommet (1) comprising a tapered hollow body having an inner surface (5), an outer surface (6), a first end (10) which sealingly engages the cable and a second end (20), a groove (30) formed in the outer surface (6) in proximity to the second end (20), said groove (30) being dimensioned such that portions of the outer surface (6) adjacent said groove (30) are

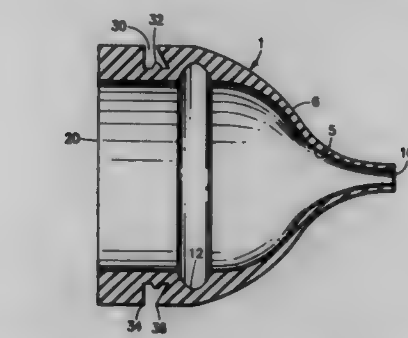

engageable with portions of said panel adjacent said opening, wherein at least one stiffness reducing means for reducing stiffness and facilitating inward deformation of the second end (12, 14, 16) is provided on the hollow body, said stiffness reducing means (12, 13, 14) comprising at least one recess extending at least partly around said hollow body in proximity to said groove (30), said hollow body defining a thickness at said recess which is less than thicknesses of said hollow body at locations immediately adjacent said recess so that elastic deformation of the second end (20) of the grommet (1) is facilitated.

5,701,635
DOORKNOB COVER
Stanton G. Hawkes, 1750 S. 275 West, #7, Perry, Utah 84302
Filed Aug. 15, 1996, Ser. No. 698,545
Int. Cl.⁶ E05B *1/00;* **E05F** *5/06*
U.S. Cl. 16—114 R **12 Claims**

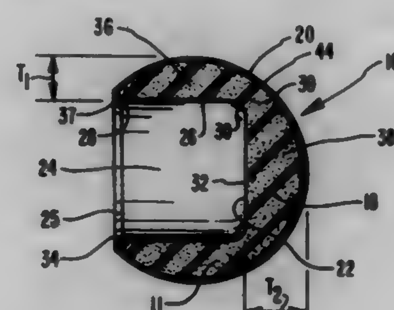

1. A doorstop system for use with a doorknob rotatably attached to a door, the door being hingedly mounted to a wall, the doorstop system comprising a doorknob cover having:
(a) an annular side wall having a substantially smooth exterior surface extending from a first end to an opposing second end;
(b) a cylindrical receiving chamber extending through the annular side wall between the first end and the second end thereof at a substantially constant diameter, the receiving chamber being configured to manually and removably receive the doorknob in a sufficiently snug engagement to enable rotation of the doorknob by rotation of the annular sidewall; and
(c) a bumper pad mounted to the second end of the annular side wall so as to substantially cover the receiving chamber thereat, the bumper pad being formed of a soft, resiliently deformable material having a thickness sufficient to cushion the impact of the doorknob against the wall when the doorknob is received within the receiving chamber.

5,701,636
ADJUSTABLE DOOR HINGE
Wolfgang Jahnke, Wadersloh, Germany, assignor to Simonswerk GmbH, Rheda-Wiedenbruck, Germany
Filed Jun. 12, 1995, Ser. No. 489,486
Claims priority, application Germany, Jun. 17, 1994, P 44 21 056.6
Int. Cl.⁶ E05D *7/04*
U.S. Cl. 16—238 **8 Claims**

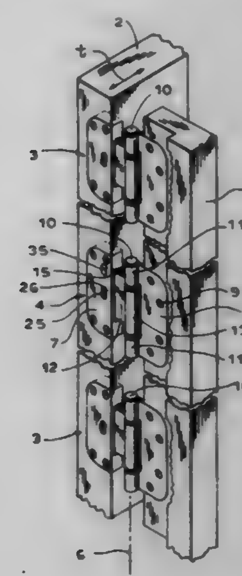

1. An adjustable hinge for mounting a movable door element to a frame element, the hinge comprising:
a plain leaf adapted to be secured to one of the elements and having at least one knuckle;
a pintle passing through the knuckle along a pintle axis; and
an adjustable leaf having an adjustment axis parallel to the pintle axis and including
a plate formed with at least one knuckle aligned with the knuckle of the plain leaf and also traversed by the pintle, and
a housing adapted to be secured to the other of the elements and formed with a slot receiving the plate with axial play, whereby the plate can move axially of the housing in the slot,
a nut axially fixed in the housing and having a nut axis parallel to the pintle axis,
a worm rotatable on the housing about an axis transverse to a plane defined by the pintle and adjustment axes, and
means including at least one axially extending screw braced between the plate and the housing, threaded into the nut, having an enlarged head axially coupling the screw to the plate, formed with gear teeth meshing with the worm, and rotatable by means of the worm for axially displacing the plate in the housing parallel to the pintle and adjustment axes.

5,701,637
SAWTOOTH WIRE FOR ALL-STEEL CLOTHING
Ralph Armin Graf, Freienbach, Switzerland, assignor to Graf+Cie AG Kratzen- und Maschinenfabrik, Rapperswil, Switzerland
Filed Aug. 7, 1996, Ser. No. 693,606
Claims priority, application Germany, Aug. 7, 1995, 195 28 976.5
Int. Cl.⁶ D01G *15/88*
U.S. Cl. 19—114 **3 Claims**

1. A sawtooth wire for an all-steel fiber-working clothing formed unitarily with:

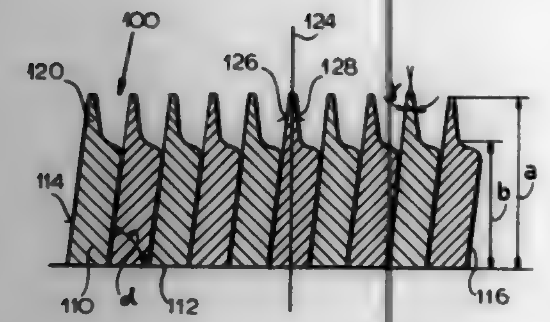

a longitudinally extending foot having a longitudinally extending base surface and a pair of parallel flanks one of which forms with the base surface an acute angle, the base surface bridging the flanks; and

a blade extending from the foot and formed with teeth having tips and each formed with a flank coplanar with one of the flanks of the foot, the blade tapering uniformly outward from the foot toward the tips, the teeth being symmetrical to a plane extending longitudinally and perpendicular to the base surface.

5,701,638
BELT CONNECTOR
Jean-François Schick, Chemin du Cambas, France, assignor to Goro S. A., Saint Privat des Vieux, France
Filed Apr. 17, 1996, Ser. No. 632,807
Claims priority, application Germany, Apr. 20, 1995, 195 14 658.1; Dec. 1, 1995, 195 44 810.3
Int. Cl.⁶ F16G *3/04*
U.S. Cl. 24—33 P **20 Claims**

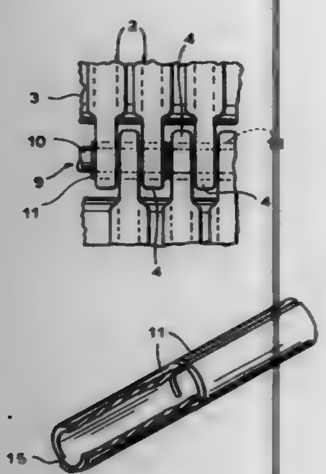

1. In combination with two belt ends, a connector comprising:

a pair of similar U-section clips each having a pair of legs secured to the respective belt end and a plurality of spaced knuckles, the knuckles being interleaved to form a transversely extending passage;

a connector rod extending through the passage and interconnecting the clips;

a plurality of outer sleeves surrounding the rod and directly engaging the knuckles, the sleeves each being of a wear-resistant material and having a soft lining of a material capable of plastically deforming; and

respective frangible webs each connecting a respective two adjacent outer sleeves together.

5,701,639
SECURING DEVICE FOR FOOTWEAR
He-Jin Chen, No.17, Alley 33, Lane 24, Sec 3, Chung Yang Road, Lung- Ching Hsiang, Taichung Shien, Taiwan
Filed Jan. 28, 1997, Ser. No. 789,383
Int. Cl.⁶ A43C *11/00*
U.S. Cl. 24—71 SK **1 Claim**

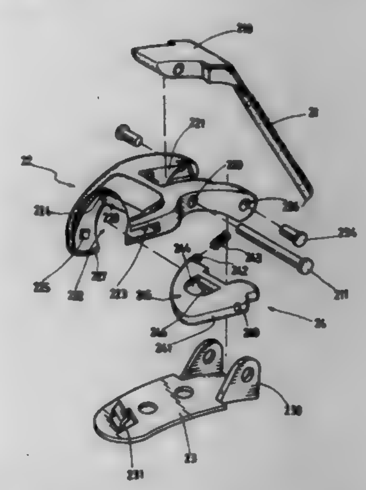

1. A securing device for footwear, comprising:

a base (23) fixedly disposed to one side of said footwear and having one end with two lugs (230) extending therefrom, the other end of said base (23) having a stop (231) extending upwardly therefrom;

a receiving member (22) having a first end with two arms (221) extending therefrom so as to pivotally connected to said two lugs (230) of said base (23) and a second end of said receiving member (22) having a receiving space (222) defined therein wherein said receiving space (222) accesses to a lateral side of said receiving member (22), said receiving space (222) defined by a top, a bottom (227) and an end wall (228) wherein said bottom (227) has a slot (225) and a first hole (223) respectively defined therethrough, said end wall (228) having a recessed portion (224) defined therein for receiving a spring (243) therein;

an operating member (24) having one end with a shaft (240) extending downwardly from an under side thereof so as to be rotatably received in said first hole (223) and the other end of said operating member (24) having a rod (242) extending transversely therefrom so as to be inserted in said spring (243), a limit member (245) extending from said under side of said operating member (24) so as to be movably received in said slot (225) of said bottom (227), said operating member (24) having a second hole (244) defined therethrough by an inner periphery defining said second hole (244), said inner periphery defining said second hole (244) having a hook member (246) extending laterally therefrom so that said stop (231) is inserted in said second hole (244) and said hook member (246) is detachably engaged with said stop (231), and

a toothed band (21) having a head (210) formed on one end thereof and said head (210) pivotally engaged between said two arms (221).

5,701,640
APPARATUS FOR CLOSING WRIST STRAPS
Hans Locher, Kurvenstrasse 14, CH-8610 Uster, Switzerland
PCT No. PCT/CH95/00048, § 371 Date Nov. 6, 1995, § 102(e) Date Nov. 6, 1995, PCT Pub. No. WO95/24139, PCT Pub. Date Sep. 14, 1995
PCT Filed Mar. 2, 1995, Ser. No. 545,700
Int. Cl.⁶ A44B *11/25*
U.S. Cl. 24—303 **19 Claims**

1. A strap closure apparatus for wrist straps, in particular straps of wrist watches, said apparatus having a magnetic closure and an

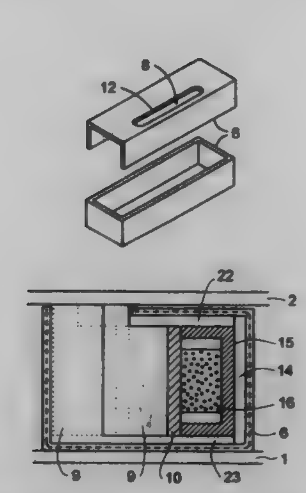

automatic mechanical lock for two closure parts and comprising at least one permanent magnet for providing magnetic force and a yoke forming part of a magnetic circuit, and a shield (6) comprising ferromagnetic material of comparatively high permeability substantially enclosing said magnetic circuit and being magnetically isolated from said magnetic circuit by air gaps (22, 23) and elements (14) whose permeability is lower than the permeability of the shield.

5,701,641
SPREADER FOR TUBULAR KNIT FABRICS
Frank Catallo, 84 Wheatley Rd., Old Westbury, N.Y. 11568
Filed Jul. 22, 1996, Ser. No. 684,097
Int. Cl.⁶ D06C *5/00*
U.S. Cl. 26—80 **2 Claims**

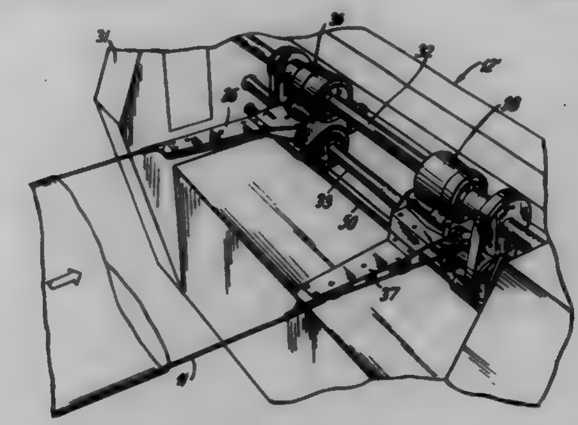

1. A spreader for use in an apparatus for treating tubular knit fabrics comprising;

a) a frame for said apparatus;
b) said frame including spaced support members;
c) said support members arranged to serve as supports for oppositely disposed fabric gripping means which comprise upper and lower rods mounted on the support members;
d) rolls for said apparatus connected to said fabric gripping means;
e) rolls mounted on the lower of said rods and in abutment with the rolls connected to the fabric gripping means;
f) rolls mounted on the upper rod and in abutment with the fabric gripping means;
g) means on said apparatus connected to the upper rod to drive same and drive said rolls mounted on said upper rod to drive said fabric gripping means to move said tubular knit fabric; and
h) an actuator means on said apparatus connected to the fabric gripping means to move said tubular knit fabric to a desired dimension.

5,701,642
ECOLOGICAL BURIAL METHOD AND APPARATUS
Stanley E. Order, 26 Acadia Dr., Voorhees, N.J. 08043
Filed Aug. 27, 1996, Ser. No. 697,392
Int. Cl.⁶ A61G *1/00*
U.S. Cl. 27—4 **3 Claims**

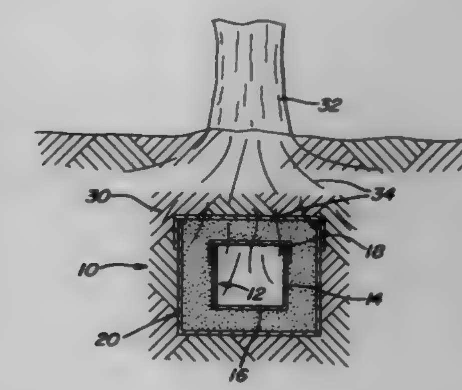

1. An ecological burial apparatus comprising a coffin structure comprising an inner and outer container, the inner and outer containers each having a bottom, side walls and a top lid, the coffin structure comprised of a biodegradable material and a nutrient or fertilizer or combinations thereof for a tree placed adjacent the coffin structure when the coffin structure is buried in the ground, so that when the coffin structure is placed into the ground the coffin structure will biodegrade and release the nutrient or fertilizer into the ground to feed the tree adjacent the coffin structure.

5,701,643
METHOD FOR COMPACTION OF FIBER FLEECE
Gerold Fleissner, Zug, Switzerland, assignor to Fleissner GmbH & Co. Maschinenfabrik, Egelsbach, Germany
Filed Jun. 27, 1996, Ser. No. 671,343
Claims priority, application Germany, Jun. 27, 1995, 195 22 763.8
Int. Cl.⁶ D04H *1/46*
U.S. Cl. 28—105 **6 Claims**

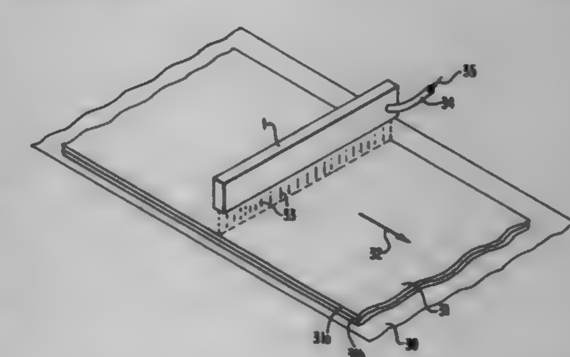

1. A method, comprising: providing a fiber fleece comprising staple fibers having a thickness of at least 10 mm without binding fibers and without binders, the fiber fleece being made on a card machine or aerodynamically;

laying the fiber fleece on a previously compacted fleece comprising spun fleece made of endless fibers as a carrier fleece; and

joining the fiber fleece to the carrier fleece and simultaneously compacting the fiber fleece in a continuous processing operation by means of a water-needling device at a water pressure of at least 100 bars.

5,701,644
METHOD FOR PRODUCING SELF-CRIMPING POLYMER BI-COMPONENT FIBERS

Werner Kaegi, Domat/Ems; Werner Stibal, Trimmis; Gunther Schaech; Rainer Straub, both of Chur, and Gerhard Schmidt, Domat/Ems, all of Switzerland, assignors to EMS-Inventa AG, Zürich, Switzerland

Filed May 6, 1996, Ser. No. 642,960
Claims priority, application Germany, May 11, 1995, 195 17 346.1
Int. Cl.[6] D02G *1/00;* **D01D** *5/32;* **D01F** *8/04;* **D06M** *15/643*
U.S. Cl. 28—220 **17 Claims**

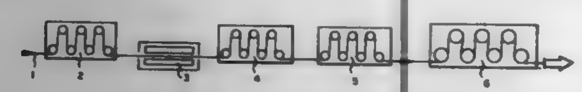

1. In a method for producing self-crimped bi-component fibers from a tow of bi-component fibers which have been side-by-side spun from bi-component material, comprising

drawing said tow to provide a drawn tow; optionally finishing said drawn tow; then relaxing the drawn and optionally finished tow to provide a relaxed tow; drying and heat setting said, relaxed tow to provide a heat-set tow; and optionally cutting said heat-set tow; the improvement further comprising

post-drawing said drawn tow prior to said optional finishing and said relaxing said post-drawing being carried out in a hot and dry state on a cold drawing unit;

after said post-drawing with said tow being in a tensed state, prior to said relaxing, providing said post-drawn tow with a water coating of between 10 and 30 weight percent, measured prior to relaxation, to provide a water-coated tow;

carrying out said drying of said water-coated tow in a dryer having an inlet; and

carrying out said relaxing of said water-coated tow at the inlet of said dryer while said water-coated tow is in a compact, closed state to provide bi-component fibers having two-dimensional Ω-crimped bows.

5,701,645
ACOUSTIC WAVE DEVICE MANUFACTURING METHOD

Donald Eugene Allen, Gilbert; Steven Ray Stringer, Mesa, and Richard Dale Coyne, deceased, late of Gilbert, all of Ariz., by Jeannette Coyne, executrix, assignors to Motorola, Inc., Schaumburg, Ill.

Division of Ser. No. 223,878, Apr. 6, 1994, abandoned. This application Jun. 2, 1995, Ser. No. 460,772
Int. Cl.[6] H03H *3/08;* **G01R** *31/00*
U.S. Cl. 29—25.35 **18 Claims**

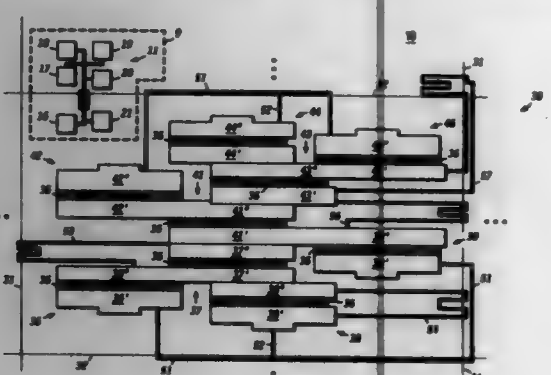

1. A method for making an acoustic wave device, said method comprising steps of:

(a) providing a substrate suitable for acoustic wave devices;

(b) processing said substrate to provide a patterned metallization thereon, said patterned metallization including an acoustic wave filter pattern;

(c) measuring a sheet resistance associated with the acoustic wave filter pattern;

(d) determining a resistance of a first test pattern associated with said acoustic wave filter pattern to provide a measured resistance;

(e) computing an estimated average linewidth for said acoustic wave filter pattern from said measured resistance and said sheet resistance; and

(f) culling die for which the linewidth computed in said step (e) falls outside of a predetermined range of acceptable values.

5,701,646
METHOD OF MAKING A SENSOR

Frederick Alan Nabity, Lincoln; Paul George Wright, Pleasant Dale; Raymond Hulinsky, and Douglas Timothy Carson, both of Lincoln, all of Nebr., assignors to Isco, Inc., Lincoln, Nebr.

Division of Ser. No. 430,155, Apr. 26, 1995, which is a division of Ser. No. 807,200, Dec. 16, 1991, Pat. No. 5,401,139, which is a division of Ser. No. 474,154, Feb. 2, 1990, Pat. No. 5,125,801. This application Nov. 29, 1995, Ser. No. 564,793
Int. Cl.[6] H01L *41/22*
U.S. Cl. 29—25.35 **13 Claims**

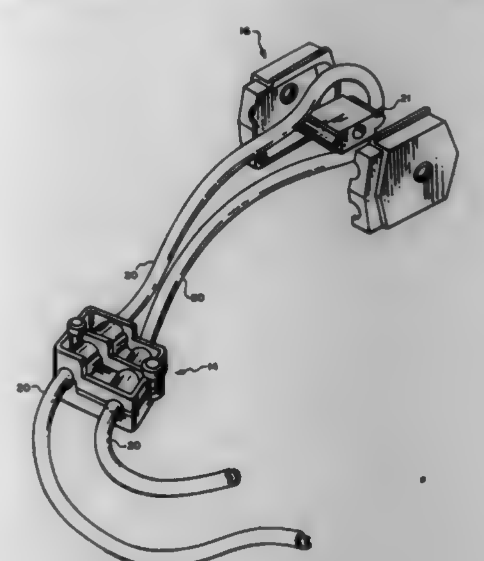

1. A method of making a sensor for detecting a liquid in a flexible conduit comprising the steps of:

providing a flexible conduit means;

forming a loop of the flexible conduit means said loop having two legs, and positioning said loop in cooperation with a peristaltic pump;

mounting said legs in a fixture wherein a strain-sensitive film in the fixture is positioned adjacent and in contact with one of said legs to sense pressure within the flexible conduit means; and

providing electrical connections to the strain-sensitive film adapted to sense periodic strains whereby pulses of pressure transmitted through the flexible conduit means may be detected.

5,701,647
METHOD FOR MAKING AN ISOLATED SIDEWALL CAPACITOR HAVING A COMPOUND PLATE ELECTRODE

Katherine Lynn Saenger, Ossining, and David Edward Kotecki, Hopewell Junction, both of N.Y., assignors to International Business Machines Corporation, Armonk, N.Y.

Division of Ser. No. 577,168, Dec. 22, 1995, Pat. No. 5,633,781. This application Jan. 22, 1997, Ser. No. 787,072
Int. Cl.[6] H01G *7/00*
U.S. Cl. 29—25.42 **12 Claims**

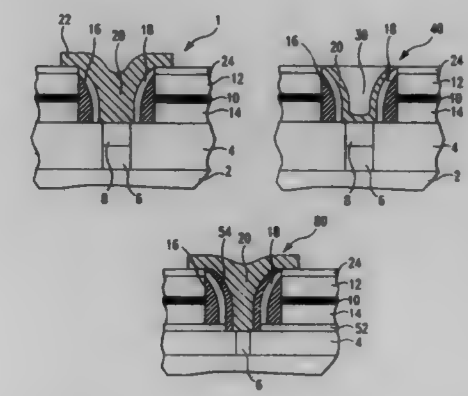

1. A method for making a capacitor structure, comprising the steps of:

forming a first conductor on a substrate having at least one layer of dielectric material thereon;

forming a first non-conductor on top of and substantially in register with the first conductor, the first conductor and first non-conductor having a first opening formed therein;

forming a second conductor, in electrical contact with the first conductor, on the sidewalls of the first opening;

forming a non-conductive sidewall spacer in the first opening on the exposed sidewalls of the second conductor, the non-conductive sidewall spacer having a second opening formed therein; and

forming a third conductor in the second opening.

5,701,648
MULTI-FUNCTIONAL FABRICATING SYSTEM FOR WELDING ELECTRODES

Chong Yang Ni, 75 Springbrook Drive, Richmond Hill, Ontario, Canada, L4B 3R3

Filed Mar. 26, 1996, Ser. No. 623,319
Int. Cl.[6] H01R *43/00*
U.S. Cl. 29—33 R **13 Claims**

1. A welding electrode fabricating system for continuously coating a flux material on a metal core of a welding electrode comprising in combination,

a receiving guide member operative for receiving and guiding a continuous metal core into said system,

a straightening station having an elongated restrictive linear channel therein operative to receive said metal core from said receiving guide member to pass therethrough,

a sending device located adjacent to said straightening station and being operative for driving said metal core forward in said coating system, said sending device including two pairs of driving rollers operative to grip and drive said metal core forward,

a coating station coupled to said sending device, said coating station having at least two pressurized flux material supply bins alternately coupled to said coating station whereby when first bin is depleted of the flux material, the second bin is coupled to said coating station while said first bin is being de-pressurized and replenished and followed by

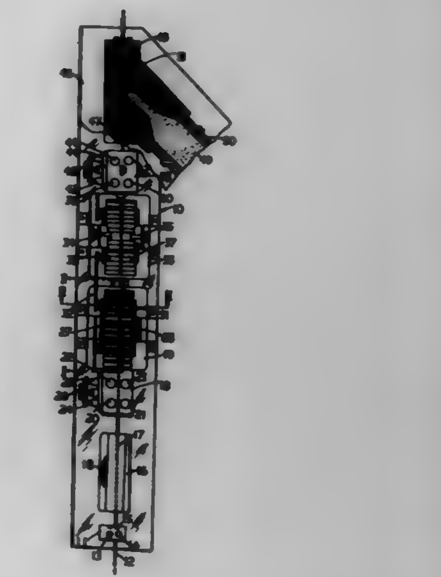

re-pressurization to ready for supplying the flux material to said coating station when the second bin is depleted of the flux material.

5,701,649
COUPLED DRAFT KEY PULLER

David Warren Reesor, and David Roy Joseph Reesor, both of Calgary, Canada, assignors to Hydra-Tech International Corporation, Calgary, Canada

Filed Apr. 16, 1996, Ser. No. 633,075
Int. Cl.[6] B23B *19/02*
U.S. Cl. 29—252 **4 Claims**

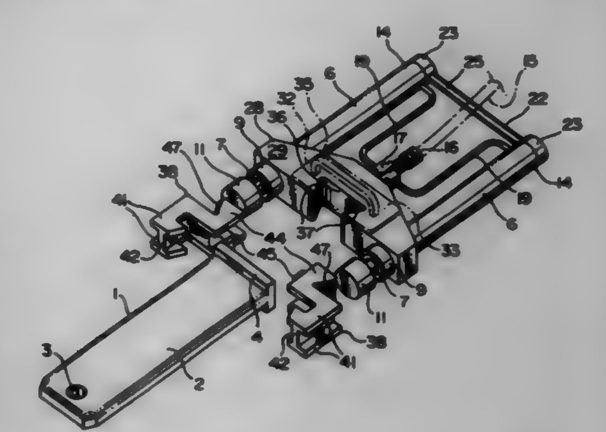

1. A device for removing a draft key including a shank and a head from a railway car coupler comprising a pair of fluid actuated cylinder means; yoke means interconnecting said cylinder means for maintaining the cylinder means in permanent parallel, spaced apart relationship; piston rod means extending outwardly from said cylinder means on one side of said yoke means; socket means in said one side of said yoke means; and separate jaw means for removable mounting in said socket means, and for receiving the head of a key, whereby the jaw means can be independently mounted on the head of a key and then placed in said socket means to connect the jaw means to said yoke means, and the piston rod means extended against the coupler to cause outward movement of said cylinder means, yoke means and jaw means to pull the key from the coupler.

5,701,650
TOOLS FOR INSERTING AND REMOVING LINER OUTLET SPOUTS

Arthur E. LaFleur, and Lee LaFleur, both of Manistee, Mich., assignors to Custom Packaging Systems, Inc., Manistee, Mich.

Continuation of Ser. No. 348,041, Dec. 1, 1994, abandoned, which is a continuation-in-part of Ser. No. 67,702, May 25, 1993, Pat. No. 5,385,268. This application Feb. 13, 1997, Ser. No. 799,987
Int. Cl.[6] B23P *19/04*
U.S. Cl. 29—267 14 Claims

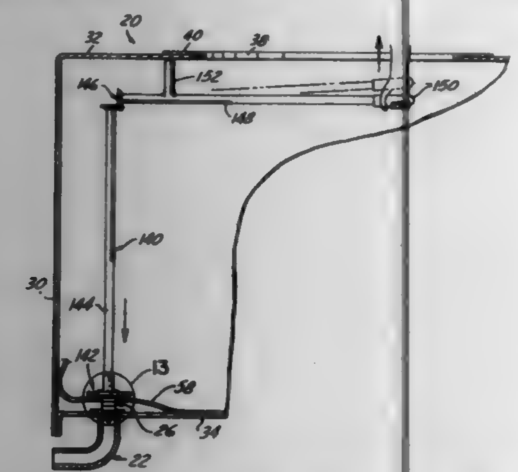

1. For a bulk container having sidewalls, end walls and a discharge outlet tube, and wherein a flexible bag liner having a self supporting spout with a tubular neck telescopically receivable in the outlet tube may be received, a tool for inserting the spout into the discharge outlet comprising:
(a) a carrier shaft,
(b) a collet at one end of the carrier shaft for engaging and releasably retaining the spout thereon, said collet extending generally axially of the carrier shaft, said collet having at least two resilient fingers telescopically insertable into the tubular neck of the spout to releasably retain the spout on the collet,
(c) a lever arm pivotally connected adjacent one end to the carrier shaft adjacent the other end of the carrier shaft,
(d) a fulcrum arm spaced from the pivotal connection, fixed to the lever arm, extending generally transversely to the longitudinal axis of the lever arm and having a free end constructed to bear on a wall of the container,
(e) the lever and fulcrum arms being constructed so that when the tool is disposed in operative position in the bulk container the lever arm extends generally transversely of the carrier shaft when the free end of the fulcrum arm bears on a wall of the container, and
(f) the carrier shaft, lever arm and fulcrum arm are constructed to move said collet generally axially relative to the container discharge outlet for inserting the spout into the discharge outlet into firm frictional engagement therewith to positively anchor and seal the liner within the container when force is applied to generally pivotally move the lever arm relative to the carrier shaft and about the free end of the fulcrum arm.

5,701,651
COMPOSITE STRINGER AND SKIN PANEL ASSEMBLY MACHINE

Oliver J. Groves, Freeland; Donald A. Jensen, Kent; Thomas S. Nelson, Renton, and Joel M. Thomas, Kent, all of Wash., assignors to The Boeing Company, Seattle, Wash.

Filed May 26, 1995, Ser. No. 451,763
Int. Cl.[6] B23Q *1/08*
U.S. Cl. 29—281.5 10 Claims

1. A system for aligning a first composite part relative to a second composite part, comprising:

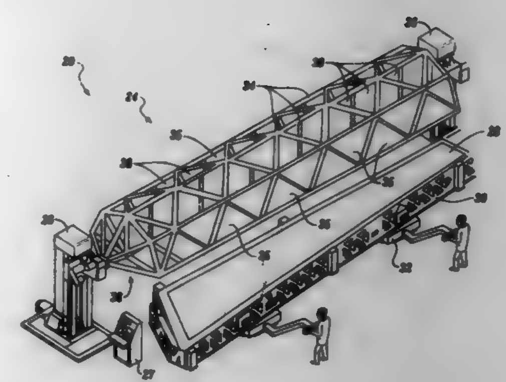

(a) a jig for supporting a first composite part, the jig having a plurality of alignment pins projecting therefrom;
(b) a mandrel for supporting a second composite part, the mandrel having a plurality of alignment holes for receiving the alignment pins;
(c) a truss for supporting the jig, the truss having first and second ends; and
(d) a first support stand connected to the first end of the truss and a second support stand connected to the second end of the truss for moving the truss toward and away from the mandrel each support stand including first linear movement means, the first linear movement means of the first support stand and the first linear movement means of the second support stand acting on the first and second ends of the truss to move the truss toward and away from said mandrel, said mandrel being mounted for free movement in directions perpendicular to the movement of the truss toward and away from the mandrel by the first linear movement means.

5,701,652
DISMOUNT METHOD OF LARGE-SIZED TANK BY CUTTING THE SAME AND JACK MECHANISM EMPLOYED THEREFOR

Yoshihide Yoshino, Tokyo, Japan, assignor to Bestera K.K., Tokyo, Japan

Filed Aug. 24, 1995, Ser. No. 518,890
Claims priority, application Japan, Aug. 24, 1994, 6-220832; Oct. 20, 1994, 6-279831
Int. Cl.[6] B23P *19/02*
U.S. Cl. 29—426.3 4 Claims

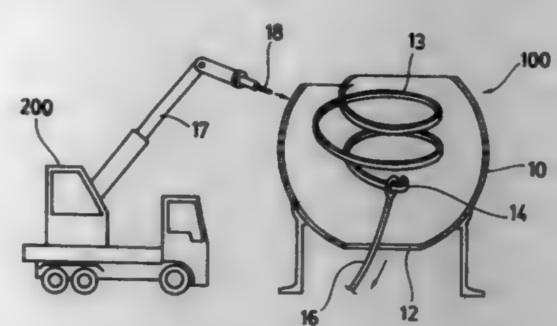

1. A method of disassembling a large-sized tank, comprising the step of:
cutting the tank continuously along a swirly path from a top central position thereof to a bottom thereof, thereby forming only one continuous band with a predetermined width, whereby as the cutting step progresses, the weight of said band increases, causing said band to fall into said tank.

5,701,653
METHOD OF ASSEMBLING A BOX SPRING FRAME

Danny L. Rupe, Corona, Calif., assignor to Alpine Engineered Products, Inc., Pompano Beach, Fla.

Filed Nov. 7, 1995, Ser. No. 554,813
Int. Cl.[6] A47C *19/00;23/06;* B30B *13/00*
U.S. Cl. 29—432 9 Claims

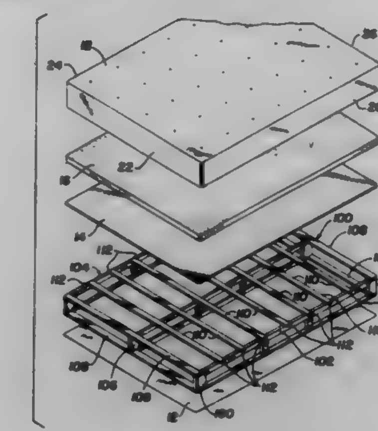

1. A method of assembling a furniture box spring frame comprising the steps of:
providing at least two truss-assembled side panels comprising the steps of providing a top beam, a bottom beam, a first end piece, a second end piece and a plurality of connector plates; positioning the top beam, the bottom beam, the first end piece, the second piece and the plurality of connector plates on a template; and assembling the top beam, the bottom beam, the first end piece, the second piece and the plurality of connector plates into a panel by compressing the pieces together;
providing a plurality of connecting members and a plurality of slats;
interconnecting the at least two side panels with the plurality of connecting members such that the at least two side panels are spaced apart and generally parallel to each other, and
attaching the plurality of slats across a top surface of the at least two side panels to form a generally planar surface.

5,701,654
PRECISION FLUID HEAD TRANSPORT

Michael James Canestaro, Endicott, N.Y., assignor to International Business Machines Corporation, Armonk, N.Y.

Division of Ser. No. 483,581, Jun. 7, 1995. This application Apr. 4, 1996, Ser. No. 627,551
Int. Cl.[6] B08B *3/00*
U.S. Cl. 29—434 20 Claims

1. A method of forming a fluid treatment apparatus, said method comprising the following steps:
providing a first sheet of material, said first sheet having an upper surface, lower surface, and two side surfaces interconnecting said upper surface to said lower surface;
forming a plurality of spaced apart drive rod member receiving passages extending through said first sheet from one of said side surfaces to the other of said side surfaces and through said upper surface of said first sheet such that an inside surface of each of said drive rod member receiving passages is continuous with said upper surface of said first sheet and provides a bearing surface for a drive rod member inserted therein;
forming at least one fluid injection passage and at least one fluid drain passage through said first sheet of material from said upper surface to said lower surface between said drive rod member receiving passages;

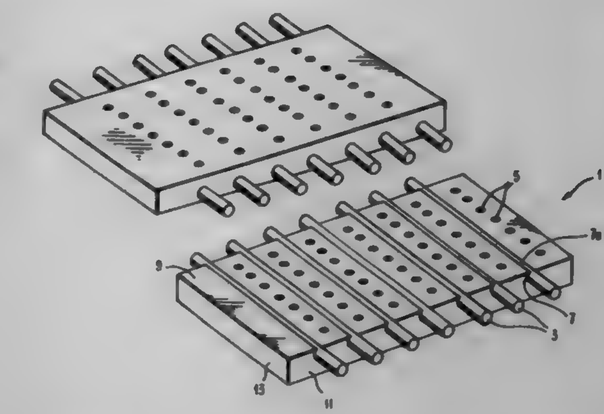

inserting a drive rod member into each of said drive rod member receiving passages such that said drive rod members are rotatably supported by said bearing surfaces and at least partially extend above said upper surface;
providing a second sheet of material, said second sheet having an upper surface, lower surface, and two side surfaces interconnecting said upper surface to said lower surface;
forming a plurality of spaced apart drive rod member receiving passages extending through said second sheet from one of said side surfaces to the other of said side surfaces and through said lower surface of said second sheet such that an inside surface of each of said drive rod member receiving passages is continuous with said lower surface of said second sheet and provides a bearing surface for a drive rod member inserted therein;
forming at least one fluid injection passage and at least one fluid drain passage through said second sheet of material from said upper surface to said lower surface between said drive rod member receiving passages;
inserting a drive rod member into each of said drive rod member receiving passages such that said drive rod members are rotatably supported by said bearing surfaces and at least partially extend below said lower surface; and
arranging said second sheet over said first sheet, such that said drive rod members of said first sheet and said second sheet face each other.

5,701,655
METHOD AND APPARATUS FOR MAKING BRAKE SHOES

Eric Charles Hales, Solihull, United Kingdom, assignor to Automotive Products, plc, Leamington Spa, England

PCT No. PCT/GB94/02809, § 371 Date Aug. 17, 1995, § 102(e) Date Aug. 17, 1995, PCT Pub. No. WO95/17613, PCT Pub. Date Jun. 29, 1995
PCT Filed Dec. 22, 1994, Ser. No. 505,317
Claims priority, application United Kingdom, Dec. 22, 1993, 93262004
Int. Cl.[6] B21D *53/34;* F16D *65/08*
U.S. Cl. 29—513 17 Claims

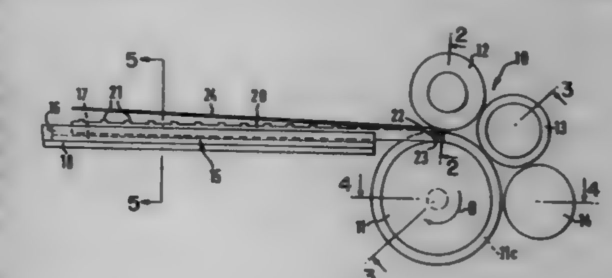

1. A method of producing an arcuate brake shoe comprising the steps of taking a first generally straight strip of material which is to

provide a web of the shoe and has a plurality of projections extending from one edge, taking a second generally straight strip which has a plurality of corresponding openings to receive the projections and which is to provide a platform of the shoe, securing the strips together with the projections inserted through the openings and forming both the strips longitudinally from their generally straight form to an arcuate form.

5,701,656
PROCESS FOR MANUFACTURING TAPER POINT SURGICAL NEEDLES

Daniel Smith, Manalapan Township; Bernard M. Willis, East Brunswick; Kenneth P. Marschke, Jr., Medford; Barry Littlewood, Harmony; Vulgens Schoen, Stockton; Carl Gucker, Branchburg; Michael Nordmeyer, Neshanic Station, all of N.J., and Thaddeus Miklewicz, Nazareth, Pa., assignors to Ethicon, Inc., Somerville, N.J.

Continuation of Ser. No. 456,365, Jun. 1, 1995, abandoned, which is a continuation of Ser. No. 146,681, Nov. 1, 1993, Pat. No. 5,477,604. This application Jun. 7, 1996, Ser. No. 665,054

Int. Cl.⁶ B23P *13/04*

U.S. Cl. 29—558 **8 Claims**

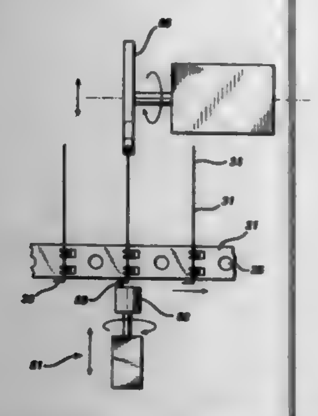

7. A method for manufacturing a wire member having a taper point, comprising:
mounting a plurality of wire blanks to a carrier means, said were blanks each having a longitudinal axis, a distal end and a proximal end;
moving the carrier means and each wire blank to a first trimming means and then cutting each wire blank in at least one plane; and,
moving each wire blank to a grinding means and grinding the distal end of each wire blank while rotating it in the carrier means to form a taper point, wherein the grinding means comprises a first grinding wheel and the grinding wheel comprises one-half of the profile of a taper point needle configuration.

5,701,657
METHOD OF MANUFACTURING A REPULSION MAGNETIC CIRCUIT TYPE LOUDSPEAKER

Yoshio Sakamoto, Hachioji, Japan, assignor to Kabushiki Kaisha Kenwood, Tokyo, Japan

Filed Jun. 24, 1994, Ser. No. 265,146

Claims priority, application Japan, Jun. 30, 1993, 5-183450

Int. Cl.⁶ H04R *31/00*

U.S. Cl. 29—594 **13 Claims**

1. A method of manufacturing a loudspeaker having a magnetic circuit comprising two magnets magnetized in the thickness direction and disposed with like poles of said two magnets facing each other and a center plate made of soft magnetic material and squeezed between the two magnets, a magnetic field of repulsion fluxes being generated at the outer peripheral area of the center plate, and a vibrating system having a voice coil, the method

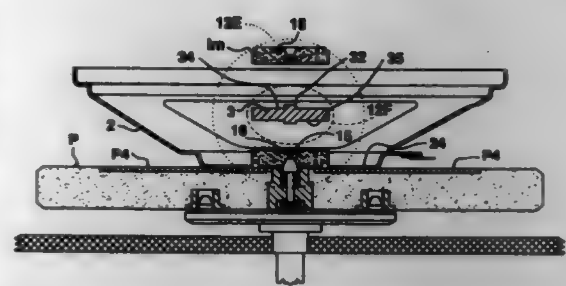

comprising; magnetizing said two magnets in the thickness direction prior to a step of assembling them into the magnetic circuit, assembling the magnetized two magnets and the center plate into the magnetic circuit so that like poles of said magnetized two magnets face each other and the center plate is squeezed between the magnetized two magnets, mounting the assembled magnetic circuit on a speaker frame while restricting a lateral movement of the magnetic circuit with respect to the speaker frame, and fixing said vibrating system to the speaker frame so that the voice coil of the vibrating system is disposed in the magnetic field generated at the outer peripheral area of the center plate in the assembled magnetic circuit mounted on the speaker frame.

5,701,658

Patent Not Issued For This Number

5,701,659
METHOD OF MAKING A THIN FILM THERMAL PRINTHEAD

Toshio Amano, Kyoto, Japan, assignor to Rohm Co., Ltd., Koyoto, Japan

Division of Ser. No. 254,512, Jun. 6, 1994, abandoned. This application Dec. 5, 1996, Ser. No. 761,010

Claims priority, application Japan, Jul. 6, 1993, 5-167066; Aug. 11, 1993, 5-199782

Int. Cl.⁶ H05B *3/00*

U.S. Cl. 29—671 **3 Claims**

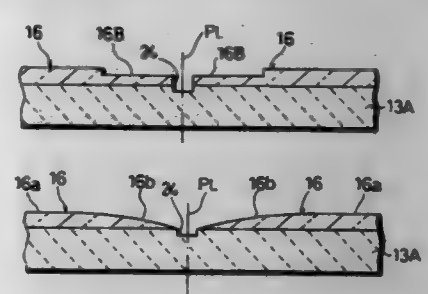

1. A method of making a thin film thermal printhead comprising the steps of:
glazing a surface of a head substrate, the head substrate having a first longitudinal edge and a second longitudinal edge;
forming a patterned resistor layer as a thin film on the glazed surface of the head substrate to provide a strip of heating dots extending along the first longitudinal edge of the head substrate; and
forming a patterned conductor layer on the resistor layer for selectively supplying power to the heating dots;
wherein the glazing step comprising applying a glaze layer with a uniform thickness on the surface of the head substrate to extend from the first longitudinal edge toward second longitudinal edge of the head substrate, baking the glaze layer, performing partial material removal of the glaze layer adjacent to the first longitudinal edge of the head substrate, and

again baking the glaze layer, whereby the glaze layer is made to have a normal first surface portion and a rounded marginal surface portion continuous with the normal flat surface portion, the rounded marginal surface portion extending along the first longitudinal edge of the head substrate and progressively approaching the head substrate toward the first longitudinal edge;
wherein the heating dots strip is located at least partially at the rounded marginal surface of the glaze layer and
wherein the partial material removal of the glaze layer is performed to form a non-inclined stepped marginal portion adjacent to the first longitudinal edge of the head substrate, the stepped marginal portion being later deformed by subsequent baking to provide said rounded marginal surface portion of the glaze layer.

5,701,660
METHOD FOR MAKING A MULTI-FUNCTION SWITCH STALK ASSEMBLY

Robert P. Javery, Southfield; Daniel T. Lau, Canton; James B. Wright, Warren, and Leroy A. Poleschuk, White Lake, all of Mich., assignors to United Technologies Automotive Systems, Inc., Dearborn, Mich.

Division of Ser. No. 382,911, Feb. 3, 1995, Pat. No. 5,581,058. This application Aug. 30, 1996, Ser. No. 705,741

Int. Cl.⁶ H01H *11/00;9/00*

U.S. Cl. 29—622 **15 Claims**

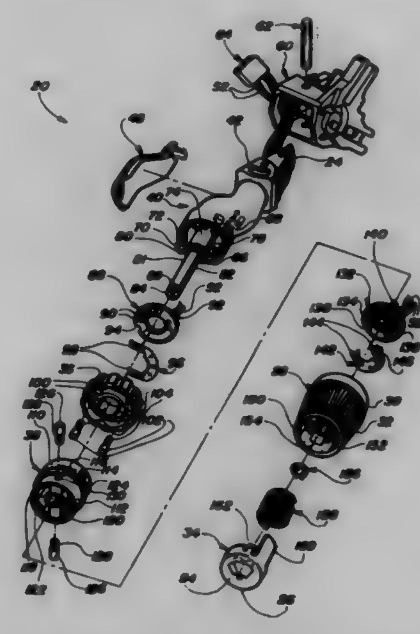

1. A method for manufacturing a multifunction switch stalk including the steps of:
providing a handle having an inner end and an outer end, said handle including a base portion at said inner end for being mounted on a vehicle steering column;
providing a shaft having an axis and an outer end;
mounting said shaft on said outer end of said handle;
providing a control knob rotatable to selectively cause a first contactor to contact a first electrical contact, thereby actuating a first predetermined vehicle function;
rotatably mounting said control knob on said shaft;
providing a fastener;
mounting said fastener on said outer end of said shaft to retain said control knob, and
mounting a push button axially compressible to selectively cause a second contactor to contact a second electrical contact, thereby actuating a second predetermined vehicle function on an outer end of said control knob.

5,701,661
OPTICAL SYSTEM FOR MUTUALLY POSITIONING A PAD CARRYING MEMBER AND A MULTILEADED COMPONENT

Hans Gerard van den Brink, Clearvauklaan 10, 5625 LC, Eindhoven, Netherlands

PCT No. PCT/NL94/00077, § 371 Date Oct. 12, 1995, § 102(e) Date Oct. 12, 1995, PCT Pub. No. WO94/24839, PCT Pub. Date Oct. 27, 1994

PCT Filed Apr. 14, 1994, Ser. No. 537,733

Claims priority, application Netherlands, Apr. 14, 1993, 9300631

Int. Cl.⁶ B23P *19/04;* **H05K** *13/04;13/08*

U.S. Cl. 29—721 **20 Claims**

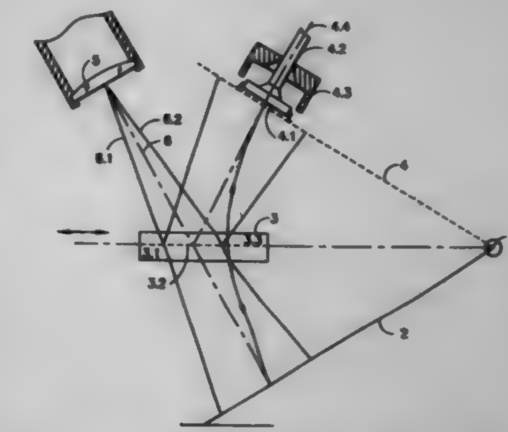

1. System for simultaneously observing without parallax a pad carrying member and the corresponding connecting leads of a surface-mounted-device component for the mounting thereof, comprising a beam splitter (3) having a semitransparent mirror (3.2) and two parallel optically identical transparent flat substrates (3.1 and 3.3), each of said transparent flat substrates having first and second opposed and parallel sides, said semitransparent mirror being arranged between and in direct contact with said first sides of said transparent flat substrates, said second sides of said transparent flat substrates being parallel to each other and not in contact with said semitransparent mirror.

5,701,662
AXIAL TYPE ELECTRONIC COMPONENT INSERTING APPARATUS

Kiyoshi Imai; Hideaki Watanabe, both of Kofu, Japan; Hiroshi Kinoshita, Singapore, Singapore, and Dai Yokoyama, Kofu, Japan, assignors to Matsushita Electric Industrial Co., Ltd., Osaka, Japan

Filed Nov. 5, 1996, Ser. No. 740,993

Claims priority, application Japan, Nov. 6, 1995, 7-287443

Int. Cl.⁶ H05K *3/30;13/02;13/04;* **B23P** *19/04*

U.S. Cl. 29—741 **6 Claims**

1. An axial type electronic component inserting apparatus for inserting into specified holes of a board a pair of lead wires of each of axial type electronic components, the pair of lead wires extending from a main body of each of the electronic components belonging to an assembly of electronic components which are connected by a tape as arranged at regular intervals, each of taped portions of a first kind of the axial type electronic components having a larger tape interval and each of taped portions of a second kind of the axial type electronic components having a smaller tape interval than the larger tape interval,
the apparatus comprising:
chucks constructed so that each of the chucks can move forward and backward while grasping end portions of one of the first and second kinds of the axial type electronic components, each of the chucks comprising protruding grasping pieces having first grasping grooves and second

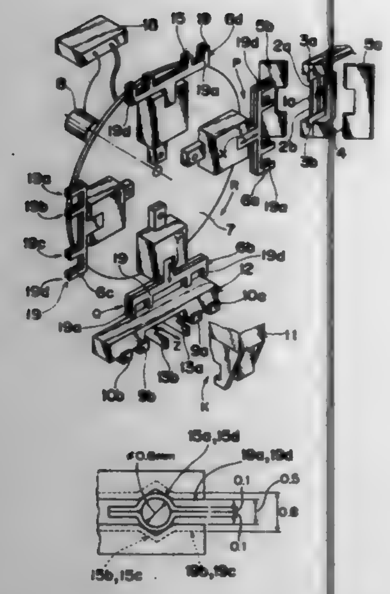

grasping grooves, the first grasping grooves grasping, with their inner surfaces, end portions of each of the first kind of the axial type electronic components, the second grasping grooves grasping, with their inner surfaces, end portions of each of the second kind of the axial type electronic components, a depth of each of the first grasping grooves being so slightly smaller than a depth of each of the second grasping grooves as to prevent the second grasping grooves from contacting the lead wires of each of the first kind of the axial type electronic components grasped by the first grasping grooves;

a component carrying device which is provided with the chucks arranged at regular intervals in a circular form and each of which operates intermittently so that each chuck stops at least in a component supplying position and a component transferring position;

a component supplying device which is provided with a cutter for cutting the tape connecting the assembly of axial type electronic components and operates to supply each axial type electronic component to each chuck located in the component supplying position; and

a component transferring and inserting device which receives the axial type electronic component from each chuck located in the component transferring position, inserts both the ends of the lead wires into the specified holes of the board, and bends the lead wires underneath the board so as to fix the axial type electronic component to the board.

5,701,663

APPARATUS FOR ASSEMBLING PHOTOGRAPHIC FILM CASSETTE

Toshiro Esaki, and Masayuki Kubota, both of Kanagawa, Japan, assignors to Fuji Photo Film Co., Ltd., Kanagawa, Japan

Division of Ser. No. 420,692, Apr. 12, 1995, Pat. No. 5,617,625. This application Sep. 20, 1996, Ser. No. 718,232

Claims priority, application Japan, Apr. 15, 1994, 6-77570

Int. Cl.^{6} B23P *21/00*

U.S. Cl. 29—783 **6 Claims**

1. An apparatus for assembling a photographic film cassette having at least a pair of shell halves and a spool assembly mounted coaxially rotatable between said shell halves, said apparatus comprising:

a plurality of pallets having the same construction;

a pallet conveyer for stepwise conveying said pallets to seriatim stop at a series of stations for sequentially feeding parts of said photographic film cassette to each of said pallets, and/or assembling said parts into 9 photographic film cassette;

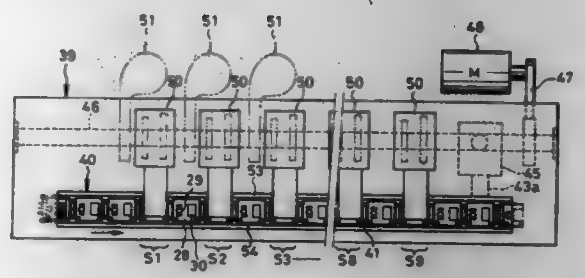

a spool holder provided on each of said pallets for holding said spool assembly with its axis oriented vertically as said spool assembly is assembled;

a shell holder provided on each of said pallets for holding one of said shell halves with its axis oriented horizontally;

an intermediate holder provided on each of said pallets for supporting said spool assembly with its axis oriented horizontally;

a first device disposed in one of said stations, for moving said spool assembly from said spool holder to said intermediate holder within the same pallet after assembly of said spool assembly is complete; and

a second device disposed in a following one of said stations, for removing said spool assembly from said intermediate holder and mounting said spool assembly in said one shell half that is held in said shell holder of the same pallet.

5,701,664

METHOD AND APPARATUS FOR NEEDLE-SUTURE ATTACHMENT

Marcel Sonderegger, Schaffhaus, Switzerland, assignor to United States Surgical Corporation, Norwalk, Conn.

Continuation of Ser. No. 297,202, Aug. 29, 1994, abandoned. This application Apr. 29, 1996, Ser. No. 639,704

Int. Cl.^{6} B23P *19/04*

U.S. Cl. 29—822 **9 Claims**

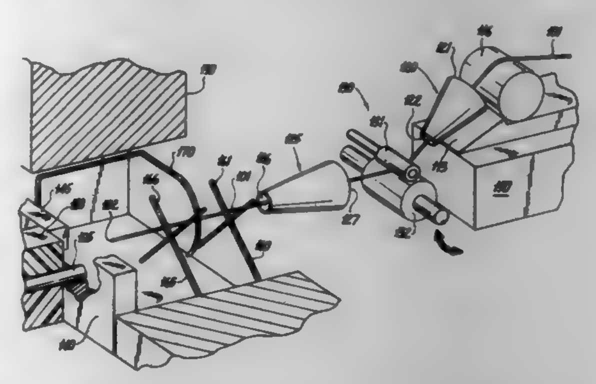

1. An apparatus for inserting a suture end portion into an aperture in a surgical needle, which comprises:

a) a frame;

b) a needle positioner for holding a surgical needle such that the needle aperture is in a fixed position;

c) at least one guide member defining an angled guide area having a relatively wide portion and a vertex portion, said vertex portion being aligned with the fixed position of the needle aperture:

d) transport means mounted to said frame for advancing a suture end portion into said relatively wide portion of said at least one guide member; and

e) deflection means movable relative to the at least one guide member, the suture end portion being moved into said vertex portion of the angled guide area in response to movement of said deflection means, wherein said deflection means comprises a resilient strand which moves the suture end portion laterally into said vertex portion of the angled guide area.

5,701,665

PI SIGNAL FREQUENCY FILTER METHOD OF MANUFACTURE

John Phillip Kling, Mt. Joy, Pa., assignor to The Whitaker Corporation, Wilmington, Del.

Filed Jan. 19, 1993, Ser. No. 5,701

Int. Cl.^{6} H03H *3/00;7/01*

U.S. Cl. 29—825 **2 Claims**

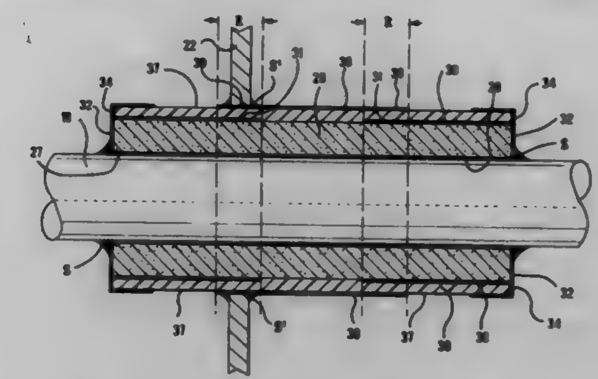

1. A method of manufacturing a filter having pi characteristics including the steps of:

a. providing a sleeve of inductive material having a bore extending therethrough,

b. applying resist material in a band on the outside of said sleeve and centered axially therealong and plating said sleeve with a first conductive coating through said bore and around the ends of the said sleeve, and removing the resist material, defining a signal electrode having spaced apart signal electrode regions along end portions of said sleeve,

c. coating the outer surface of the sleeve and said signal electrode regions with a dielectric material and applying a resist material to the outside of said dielectric material, said resist material being applied in a pair of bands positioned spaced apart and at least extending toward both ends of the sleeve superposed over portions of said signal electrode regions other than at inner portions thereof, to define a gap therebetween of selected axial length to coextend over inner end portions of said signal electrode regions,

d. plating the outside of the dielectric material in non-banded areas with a second conductive coating, and removing the resist, to form a ground electrode between the bands of resist material of a length to coextend over said inner end portions of both said signal electrode regions, with the first conductive coating on the sleeve forming a signal electrode that is exposed to be interconnected to a signal conductor, with the ground electrode exposed on the outwardly facing surface of the dielectric material to be connected to a grounding conductor and coextending over portions of said signal electrode defining regions of capacitance, thereby forming a one-piece filter structure having pi characteristics.

5,701,666

METHOD FOR MANUFACTURING A STIMULUS WAFER FOR USE IN A WAFER-TO-WAFER TESTING SYSTEM TO TEST INTEGRATED CIRCUITS LOCATED ON A PRODUCT WAFER

Robert Keith DeHaven, and James F. Wenzel, both of Austin, Tex., assignors to Motorola, Inc., Schaumburg, Ill.

Continuation of Ser. No. 506,453, Jul. 24, 1995, abandoned, which is a division of Ser. No. 298,870, Aug. 31, 1994, abandoned. This application Apr. 16, 1997, Ser. No. 843,491

Int. Cl.^{6} H05K *3/10;* **H01L** *21/66;* **G01R** *31/02;31/28*

U.S. Cl. 29—831 **20 Claims**

1. A method for forming a stimulus wafer, the stimulus wafer being formed for stimulating a semiconductor product wafer, the method for forming the stimulus wafer comprising:

providing a substrate having a surface;

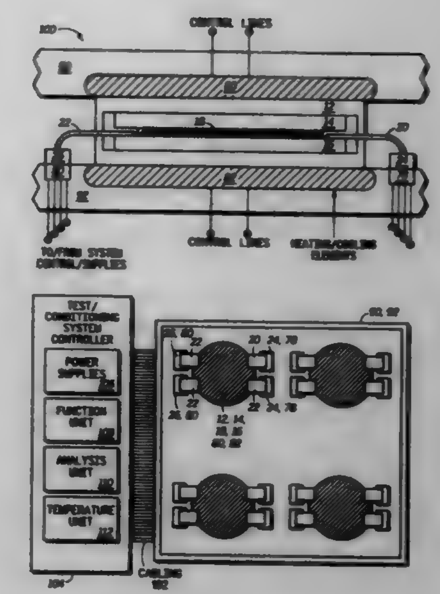

forming, on the surface of the substrate in a first area, a plurality of input/output terminals coupled so that the input/output terminals provide test control signals external to the stimulus wafer;

forming, on the surface of the substrate in a second area different from the first area, a plurality of integrated circuits wherein each integrated circuit in the plurality of integrated circuits contains test circuits coupled to top level conductive pads, the top level conductive pads being configured to allow the test circuits in the plurality of the integrated circuits to test product integrated circuits on the semiconductor product wafer via electrical test signals originating in the test circuits and transmitted through the top level conductive pads, the plurality of integrated circuits being laid out in a predetermined two-dimensional geometry across the surface of the substrate, the test circuits comprising circuitry for controlling voltage to the semiconductor product wafer, circuitry for controlling current to the semiconductor product wafer, and circuitry for controlling signals through the top level conductive pads to the semiconductor product wafer;

forming at least one feedback circuit, on the surface of the substrate in a third area which is different from both the first and second area, the at least one feedback circuit comprising temperature monitoring circuitry and performance monitoring circuitry for identifying which circuits in the plurality of driver circuits have identified a stimulus problem on the semiconductor product wafer;

forming a stimulus wafer conductive interconnect network for coupling signals between the plurality of input/output terminals, the plurality of driver circuits, and the at least one feedback circuit.

5,701,667

METHOD OF MANUFACTURE OF AN INTERCONNECT STRESS TEST COUPON

Stephen Michael Birch, Nepean; Gerard Michel Gavrel, Alymer, and Zaffar Iqbal Memon, Ottawa, all of Canada, assignors to Digital Equipment Corporation, Maynard, Mass.

Division of Ser. No. 373,916, Jan. 17, 1995, Pat. No. 5,451,885. This application May 17, 1995, Ser. No. 442,938

Int. Cl.^{6} H01K *3/10*

U.S. Cl. 29—852 **6 Claims**

1. A method of manufacturing a printed wiring board coupon comprising the steps of:

forming a substrate; and

positioning a plurality of electrically interconnected test vias in the substrate in an arrangement such that when a stress test

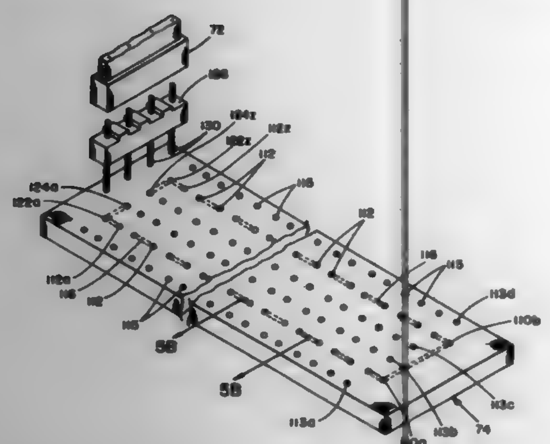

current is applied to said test vias, the heat dissipated by each of said test vias does not contribute to the heating of the other test vias, the test vias thereby remaining thermally isolated from one another.

5,701,668
METHOD OF MAKING A REFRIGERATION COMPRESSOR THRUST BEARING ASSEMBLY

Nelik I. Dreiman, Tipton, and Tara C. Kandpal, Tecumseh, both of Mich., assignors to Tecumseh Products Company, Tecumseh, Mich.

Division of Ser. No. 448,198, May 23, 1995, Pat. No. 5,554,015. This application Jul. 9, 1996, Ser. No. 678,497
Int. Cl.⁶ B23P *15/00*
U.S. Cl. 29—888.02 **8 Claims**

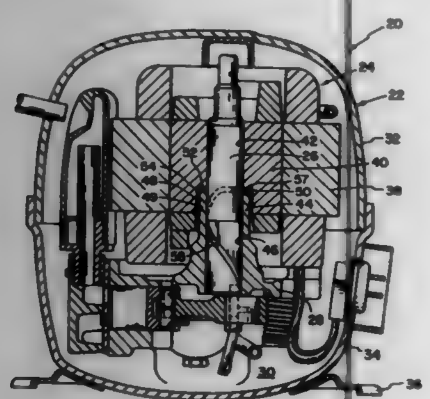

1. A method of manufacturing a motor-compressor unit for use in a refrigeration compressor having a motor including a stator and a rotor, a crankshaft connected to the rotor, and a frame having a bearing hub receiving and supporting the crankshaft and rotor assembly, the manufacturing method including the steps of:

forming an annular thrust bearing from a fluorocarbon-based resin and providing at least one oil distributing groove on a lower surface of the thrust bearing;

press fitting the thrust bearing within a recess formed in the rotor, whereby the thrust bearing lower surface faces the bearing hub and the thrust bearing is fixed relative to the rotor;

processing an upper surface of the bearing hub to a finish of at least 63 microinches;

disposing the crankshaft within the rotor recess and connecting the crankshaft to the rotor so as to prohibit the movement of the crankshaft relative to the rotor; and

disposing the rotor and crankshaft assembly within the stator with an end of the crankshaft extending axially away from the rotor and being rotatably received in a bore formed in the bearing hub, whereby the lower surface of the thrust bearing engages and is supported by the upper surface of the bearing hub.

5,701,669
REPAIR METHOD FOR LENGTHENING TURBINE BLADES

Reinhold Meier, Dorfen, Germany, assignor to MTU Motoren- und Turbinen-Union Muenchen GmbH, Munich, Germany

Filed Dec. 9, 1996, Ser. No. 761,928
Claims priority, application Germany, Dec. 21, 1995, 195 47 903.3
Int. Cl.⁶ B23P *15/00*
U.S. Cl. 29—889.1 **24 Claims**

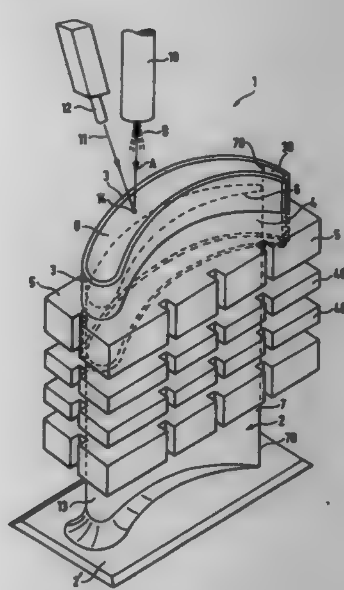

1. A method of lengthening a turbine blade, comprising the following steps:

(a) arranging a sheet metal strip along a blade contour of an end portion of said blade, such that a protruding part of said sheet metal strip protrudes beyond a blade tip of said blade;

(b) molding a synthetic material around at least a portion of said blade and a portion of said sheet metal strip so as to form an outer surround molding that tightly presses said sheet metal strip in a contour-fitting manner against said blade contour of said end portion of said blade, wherein at least a portion of said protruding part of said sheet metal strip protrudes out of said surround molding; and

(c) applying deposit material onto said blade tip so as to lengthen said blade, by carrying out deposit welding in a space bounded hy said protruding part of said sheet metal strip.

5,701,670
METHOD OF MAKING ROCKET ENGINE COMBUSTION CHAMBER UTILIZING "SLIDE IN" PORT LINER

Steven C. Fisher; Theodore C. Adams, both of Simi; Maynard L. Stangeland, Thousand Oaks; Jacob Rietdyk, Alta Loma, and Paul R. Winans, Thousand Oaks, all of Calif., assignors to Boeing North American, Inc., Seal Beach, Calif.

Filed Jun. 23, 1994, Ser. No. 264,263
Int. Cl.⁶ B23P *15/00*
U.S. Cl. 29—890.01 **9 Claims**

1. A method of making a rocket engine combustion chamber comprising:

forming a coolant liner having an outside surface;

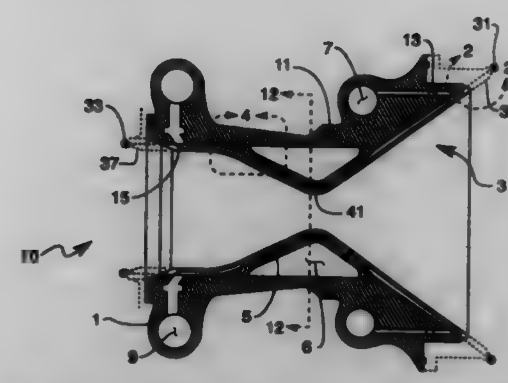

forming a plurality of coolant channels on the outside surface of the coolant liner so that the surface has a plurality of lands;

forming at least two throat support sections;

assembling the throat support sections together around the outside surface of the coolant liner;

forming a structural jacket having an inside cavity, an inlet manifold, inlet feed passages, an outlet manifold, and outlet feed passages;

inserting the coolant liner with surrounding throat support sections into the structural jacket inside cavity to form a combustion chamber assembly;

forming sealing joints between the coolant liner and the structural jacket to seal off the coolant channels;

capping the inlet and outlet manifolds;

inserting the combustion chamber assembly into a pressure furnace;

pressurizing the furnace, thus forcing the coolant liner, throat support sections, and structural jacket into contact;

heating the combustion chamber assembly to a bonding temperature for bonding the assembled parts to each other to form the combustion chamber while pressurizing the pressure furnace.

5,701,671
METHOD FOR MACHINING A REDUCTION OR STEP-UP GEAR

Takashi Haga, Ohbu, Japan, assignor to Sumitomo Heavy Industries Ltd., Tokyo, Japan

Division of Ser. No. 005,313, Jan. 15, 1993, Pat. No. 5,472,384. This application Jun. 6, 1995, Ser. No. 466,727
Claims priority, application Japan, Jan. 17, 1992, 4-026258; Jan. 17, 1992, 4-026260
Int. Cl.⁶ B23P *17/00*
U.S. Cl. 29—893.35 **6 Claims**

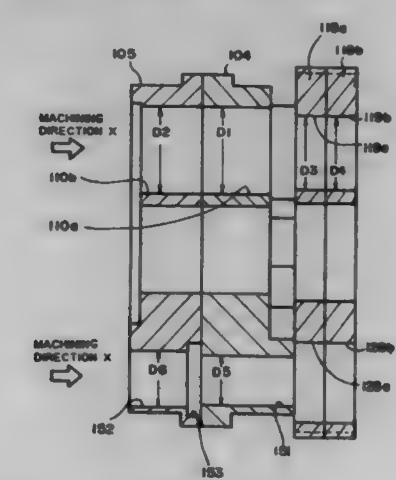

1. A method for machining a reduction or step-up gear, said method comprising the steps of:

providing a casing;

providing a main rotational shaft having the tip inserted into said casing;

providing a first supporting block and a second supporting block disposed around said main rotational shaft in an axially spaced apart manner, and which are rotatably supported by said casing through respective bearings;

providing a carrier body which rigidly connects said first supporting block with the second supporting block;

providing a plurality of eccentric body shafts along a circumference coaxial to said main rotational shaft, and which are rotatably supported at both the ends thereof by eccentric body shaft bearing holes respectively formed on said first and second supporting blocks, respectively, and rotated in interlocking relation with said main rotational shaft;

providing eccentric bodies at axially central portions of said eccentric body shafts;

providing an externally toothed gear between said first and second supporting blocks, and which is eccentrically rotated around said main rotational shaft in a rotatable fitting relation between said eccentric body bearing holes respectively formed thereon and said eccentric bodies through said eccentric body bearings; and

providing an internal gear fixed on said casing and internally meshing with said externally toothed gear, wherein respective diameters of said eccentric body bearing holes are different from any one of the diameters of said eccentric body shaft bearing holes respectively formed on said first and second supporting blocks, said method further comprising the steps of

preparing carrier pins serving as said carrier body which are formed separately from said first and second supporting blocks;

rigidly connecting said first and second supporting blocks to each other with said carrier pins respectively passing through carrier pin holding holes respectively formed on said first and second supporting blocks from one supporting block side;

setting respective diameters of said eccentric body shaft bearing holes, said eccentric body bearing holes and said carrier pin holding holes in such a manner as to satisfy a relationship wherein when said first and second supporting blocks and said externally toothed gear are appropriately rearranged in the axial positions thereof, the diameters of said eccentric body shaft bearing holes respectively formed on said first and second supporting blocks and the diameters of said eccentric body bearing holes respectively formed on said externally toothed gear are smaller at one end thereof than at another end thereof, and

while maintaining said rearrangement, the diameters of said carrier pin holding holes respectively formed on said first and second supporting blocks are smaller at one end thereof than at another end thereof; and

chucking said first supporting block, second supporting block and said externally toothed gear in such an arrangement as to maintain said relationship;

among said eccentric body shaft bearing holes, said eccentric body bearing holes and said carrier pin holding holes, forming said eccentric body shaft bearing holes and said eccentric body bearing holes into first respective through-holes; and

while keeping said chucking, forming said carrier pin holding holes into second respective through-holes, respectively.

3. method as recited in claim 1, wherein a section of the diameters of said carrier pin holding holes respectively formed on said first and second supporting blocks is constant.

5,701,672
COMPLEX ACTION NAIL CLIPPER
Jeffrey I. Wachtel, 148 Canterbury La., Blue Bell, Pa. 19422, and Bruce M. D'Andrade, Whitehouse Station, N.J., assignors to Jeffrey I. Wachtel, Blue Bell, Pa.
Filed Aug. 8, 1996, Ser. No. 694,163
Int. Cl.⁶ B26B *17/00; A45D 29/02*
U.S. Cl. 30—28 **23 Claims**

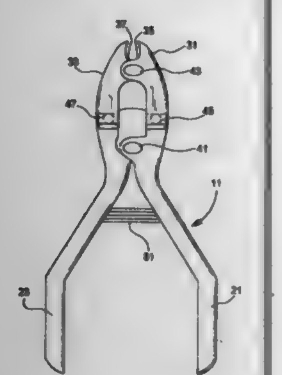

1. A compound action complex pivotal nail clipper comprising:
(a) a handle portion, said handle portion comprising a first handle member and a second handle member, said first and second handle members being joined at a first pivot point by a first post member, said post member extending along a rotary axis;
(b) a jaw portion, said jaw portion comprising a first jaw member and a second jaw member, said first jaw member and said second jaw member each having a first end and a second end, said first jaw member and said second jaw member being joined at a second pivot point by a second post member being located between said first and second jaw member ends, said second post member extending along a rotary axis being oblique with respect to said first post member rotary axis, said first jaw member first end and said second jaw member first end defining a pair of opposed cutting blades;
(c) means for pivotally connecting said first jaw member with said first handle member such that a third pivot point is defined and for pivotally connecting said second jaw member with said second handle member such that a fourth pivot point is defined.

5,701,673
DRY SHAVING APPARATUS WITH PIVOTALLY MOUNTED LONG-HAIR TRIMMER
Roland Ullmann, Offenbach, and Helmut Faulstich, Frankfurt, both of Germany, assignors to Braun Aktiengesellschaft, Kronberg, Germany
Filed Mar. 15, 1996, Ser. No. 616,688
Claims priority, application Germany, Jun. 12, 1995, 195 21 299.1
Int. Cl.⁶ B26B *19/38*
U.S. Cl. 30—34.1 **16 Claims**

1. A dry shaving apparatus comprising:
a housing;
at least one short-hair cutter;
a long-hair trimmer that is pivotally-mounted to the housing such that the long-hair trimmer can pivot into and out of an operating position;
an electric drive mechanism which during operation drives said short-hair cutter and said long-hair trimmer;
a pivotally-mounted lever;
a control rod; and
a single control switch which during operation moves the long-hair trimmer into and out of the operating position and turns the electric drive mechanism on and off, said control switch being coupled to the long-hair trimmer by the pivotally

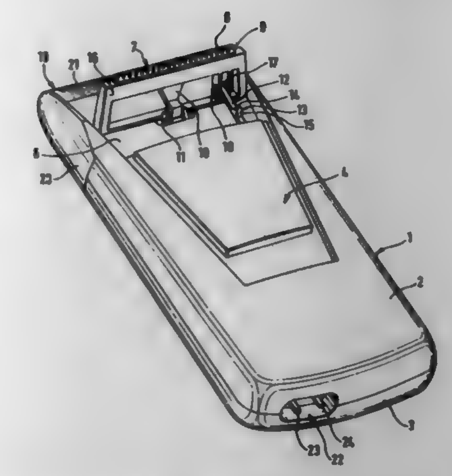

mounted lever and the control rod and having an ON position and a first and second OFF position, wherein the control switch in the first OFF position deactivates the long-hair trimmer and maintains the long hair trimmer in the operating position.

5,701,674
SHAVING CREAM DISPENSING RAZOR
John R. Mitchell, Darien, Ill., assignor to Venture Innovations, Inc., Westmont, Ill.
Filed Oct. 6, 1995, Ser. No. 539,996
Int. Cl.⁶ B26B *21/44*
U.S. Cl. 30—41 **17 Claims**

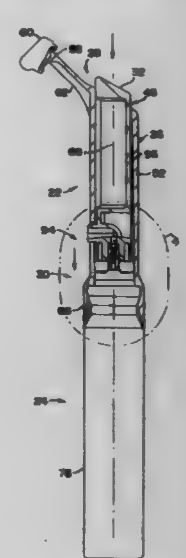

1. A razor body for use with a canister containing aerosol shaving cream, said canister including a body portion, a head portion disposed thereon, a neck positioned between said head and said body and a canister valve assembly disposed on said head for dispensing shaving cream from said canister, said razor body comprising:
an axially elongated, hollow tubular body portion having a wall defining a tubular cavity extending therethrough;
an elongated slot in said wall of said hollow tubular body;
an axially elongated plunger assembly positioned in said cavity having a plunger shaft, a nozzle assembly engageable with said canister valve assembly, a dispensing portion of said nozzle assembly extending from said elongated plunger shaft through said elongated slot, a nozzle plunger grip extending from a second end of said plunger shaft distal said assembly formed on one end of said plunger shaft, said plunger being

axially displaceable in said cavity for activating said canister valve assembly to dispense shaving cream from said canister through said nozzle assembly;
a central axis defined by said tubular body portion and said plunger assembly;
a razor support attached to said tubular body portion at a position distal said canister;
a stabilizing structure attached to said tubular body portion for engaging and retaining said razor body on said head and said body of said canister, said stabilizing structure including at least one protrusion on an inside surface of said tubular body portion, said stabilizing structure preventing axially and angular displacement at said razor body relative to said central axis; and
an assembly notch on an inside surface of said sleeve of said stabilizing structure, said notch extending generally parallel to an axis of elongation of said sleeve and communicating with said elongated slot allowing said dispensing portion of said nozzle assembly to pass therethrough for extension through said slot when assembling said plunger with said tubular body portion.

5,701,675
AXE COMBINATION TOOL
David K. Hall, Kodak, and Kit Rae, Sevierville, both of Tenn., assignors to United Cutlery Corporation, Sevierville, Tenn.
Filed May 10, 1996, Ser. No. 644,132
Int. Cl.⁶ B26B *23/00*
U.S. Cl. 30—123 **8 Claims**

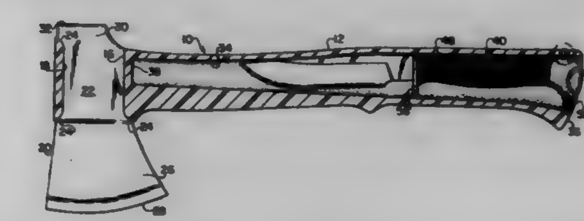

1. An axe comprising:
a handle;
a head attached to said handle;
said handle including an open cavity for receiving a removable secondary tool, wherein said secondary tool includes a grasping member and a blade member attached to said grasping member, and wherein said handle includes a cutout open along the end rim of the handle for accessing said secondary tool when said secondary tool is received within said cavity; and
means for removably securing said secondary tool within said cavity.

5,701,676
PORTABLE ROTARY SAW
Akihiro Itoh, Anjo, Japan, assignor to Makita Corporation, Anjo, Japan
Filed May 1, 1996, Ser. No. 644,617
Claims priority, application Japan, May 9, 1995, 7-110835
Int. Cl.⁶ B26D *9/00*
U.S. Cl. 30—388 **11 Claims**

1. A rotary saw, comprising
a cooling fan coupled to an output shaft of a motor,
fluid communication means forming an air intake to permit cooling air to flow from said cooling fan to a blade chamber formed by a blade case such that said cooling air delivered by the cooling fan is blown into the blade chamber through the fluid communication means, and
means forming a guide passage in the blade chamber for separating the cooling air passing through said fluid communica-

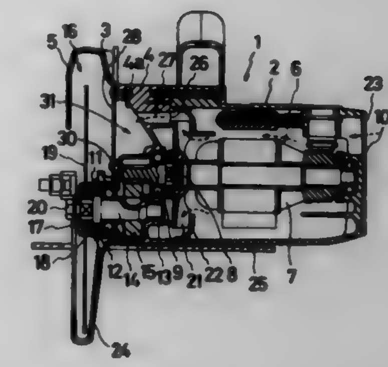

tion means from a pathway of airflow created by a rotating saw blade mounted within the blade chamber, said guide passage having means forming an opening for discharging the cooling air out of the blade chamber.

5,701,677
FEEDING APPARATUS CAPABLE OF RESTRAINING A YAWING MOTION
Toshiaki Yamaguchi; Nobumitsu Takahashi, and Hiroki Yamaguchi, all of Gunma, Japan, assignors to NSK Ltd., Tokyo, Japan
Filed May 24, 1996, Ser. No. 653,326
Claims priority, application Japan, May 25, 1995, 7-126599
Int. Cl.⁶ G01B *3/00*
U.S. Cl. 33—1 M **18 Claims**

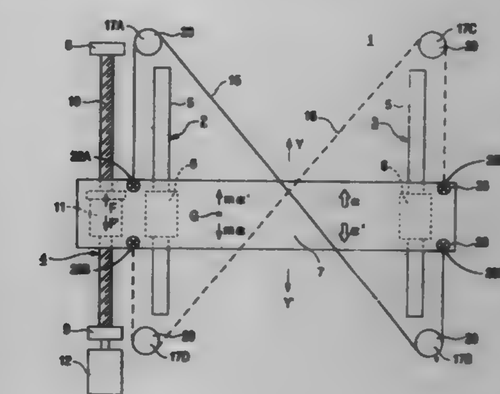

1. A feeding apparatus comprising:
a base;
a movable body elongated in a longitudinal direction orthogonal to a moving direction of the movable body on the base;
a pair of linear guide devices arranged on the base in parallel with each other, for guiding the movable body in the moving direction;
a linear drive device mounted on the base for moving the movable body along the linear guide device; and
an attitude stabilizing device for restraining a yawing motion of the movable body, the attitude stabilizing device comprising at least one rope member, first and second fastening points formed in the movable body for fixing the rope member, the first and second fastening points being separated from each other in the longitudinal direction, and first and second direction-changing devices mounted on the base and separated from each other in the moving direction, each of the first and second direction-changing devices turning around the

rope member to be fastened at the first and second fastening points, respectively.

5,701,678
SPACE-TIME TRACKER
Jen-Hu Wang, Suite 2, 7F, No. 95-8 Chang Ping Road, Sec. 1, Taichung, Taiwan
Filed Jan. 17, 1996, Ser. No. 587,650
Int. Cl.⁶ G04B *19/26*
U.S. Cl. 33—268 **23 Claims**

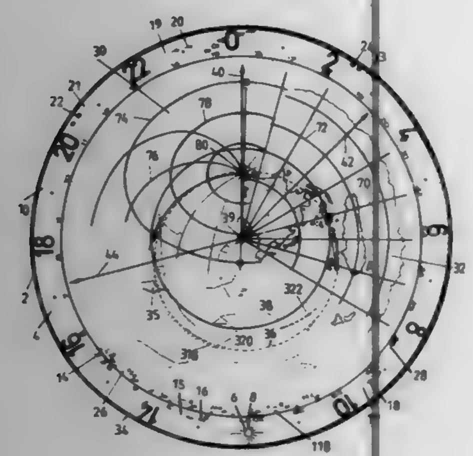

1. A space-time tracker for tracking the variations of the time and space comprising
a circular case;
a seat plate fixed to said case therein, said seat plate comprising a central aperture, a circumferential thread and a general tooth band and a star atlas tooth band concentrically disposed on the back side thereof;
a moon/star ring fixed to said case adjacent said seat plate having a plurality of windows of planet signs thereon and a plurality of circular slots on the back side thereof for receiving a plurality of planet annular displays;
a transparent date/hour ring fixedly attached to said moon/star ring thereupon;
a star atlas movably attached to said seat plate thereon;
a transparent terrestrial map combined with a transparent fixed latitude observation chart thereon and an hour hand therein movably attached on said star atlas;
a minute hand and a second hand sequentially pivoted to a spindle projected upward from the central aparture and sliding on said fixed latitude observation chart;
a transparent face fixed to said case on the uppermost position;
a clock mechanism with a battery cell centrally disposed on the back of said seat plate;
a synchronic motor with a battery cell circumferentially disposed on the back of said seat plate;
a plurality of driving devices for driving said plurality of planet annular displays circumferentially disposed on the back of said moon/star ring therearound and drove by said motor via said general tooth band;
an accessary plate attached on said driving devices;
a back cover closed on the back of said case on a lowermost position;
whereby, said space-time tracker is synchronously driven by said clock mechanism and said synchronic motor to show simultanously the time and the locations of planets on the spot.

5,701,679
PRISM SUPPORT
Steven J. Buzikievich, 54 Nanaimo Avenue East, Penticton, British Columbia, Canada, V2A 1L9
Filed May 13, 1996, Ser. No. 647,598
Claims priority, application Canada, Jan. 25, 1996, 2,168,176
Int. Cl.⁶ G01C *15/00*
U.S. Cl. 33—293 **26 Claims**

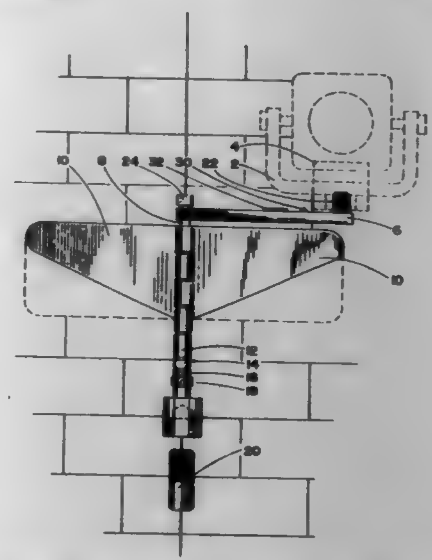

1. A prism support for stabilising a prism against a generally vertical fixed surface comprises:
a first elongate member removably mountable onto an upper end of a range pole so as to be generally aligned with said range pole when the first elongate member is mounted thereon,
generally opposable second and third members mounted onto said first elongate member in radially spaced apart relation about said first elongate member,
said second and third members extending outwardly of said first elongate member,
said second member lying in a first plane containing said first elongate member,
said third member lying in a second plane containing said first elongate member,
a cantilevered member selectively rotatably mountable onto said first elongate member for mounting of a prism thereon.

5,701,680
TILE SETTER'S MEASURING TOOL
Glenn M. Garcia, and Robert E. Diller, both of Lewisville, N.C., assignors to TNT Tools, Inc., Lewisville, N.C.
Filed Aug. 13, 1996, Ser. No. 696,340
Int. Cl.⁶ G01B *5/24;* **B43L** *7/10*
U.S. Cl. 33—526 **14 Claims**

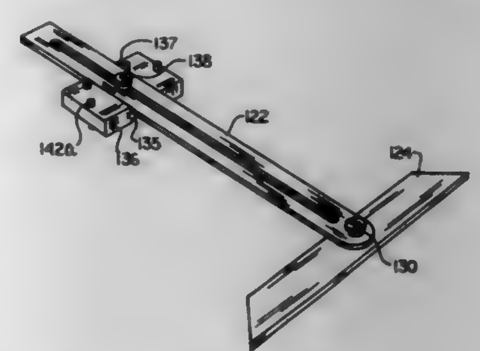

1. A tile setter's measuring tool comprising

a cup slide in the form of an elongate bar having a through-extending passageway along a substantial proportion of its length and a pivot mount at one end,
an object guide pivotally mounted to said pivot mount, and
a tile cup block slidably engaged to said cup slide by a fastener passing through said passageway, permitting positioning of said tile cup block at a desired orientation and location along said passageway, said tile cup block having an upper surface and a lower surface, each of said upper and lower surfaces being provided with spacers in arrangements that differ from one another,
whereby a tile setter may measure a needed tile size from an installed tile to a perimeter object by positioning the object guide adjacent the perimeter object and the tile cup block spacers on the lower surface adjacent an installed tile, reposition the tool to a tile to be measured with the spacers adjacent a tile edge and define a tile edge to be cut by the position of the object guide, the spacers providing an adjustment in the measurement to allow for a desired grout width.

5,701,681
HAND-HELD HAIR DRYER
Boris Wonka, Neu-Isenburg; Jürgen Behrendt, Idstein, and Gerald Imhof, Griesheim, all of Germany, assignors to Braun Aktiengesellschaft, Kronberg, Germany
Filed Jan. 21, 1997, Ser. No. 786,510
Claims priority, application Germany, May 23, 1995, 195 18 812.8
Int. Cl.⁶ A45D *00/00*
U.S. Cl. 34—97 **24 Claims**

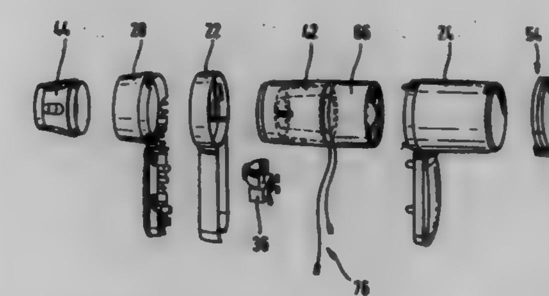

1. A hand-held hair dryer comprising
a housing having a handle and an outer tube defining an air inlet port and an air outlet port in fluid communication with one another, said outer tube further comprising a first material having a first thermal stability,
a fan and a heater disposed within said housing generating and heating an air stream directed towards said air outlet port, and
an inner tube received within an interior of said outer tube, said inner tube accommodating at least said heater of said fan and said heater, said inner tube further comprising a second material having a second thermal stability higher than said first thermal stability of said outer tube and wherein the inner tube extends, in a direction outward of the air outlet port, at least flush with the air outlet port and is adapted to mount a hair styling implement.

5,701,682
CAPILLARY DEWATERING METHOD AND APPARATUS
Strong C. Chuang, Chadds Ford, Pa.; Kenneth Kaufman, Mount Laurel, N.J., and Robert H. Schiesser, Warrington, Pa., assignors to Kimberly-Clark Worldwide, Inc., Neenah, Wis.
Division of Ser. No. 344,219, Nov. 23, 1994, Pat. No. 5,598,643. This application Sep. 25, 1996, Ser. No. 719,749
Int. Cl.⁶ D21F *5/00*
U.S. Cl. 34—115 **8 Claims**

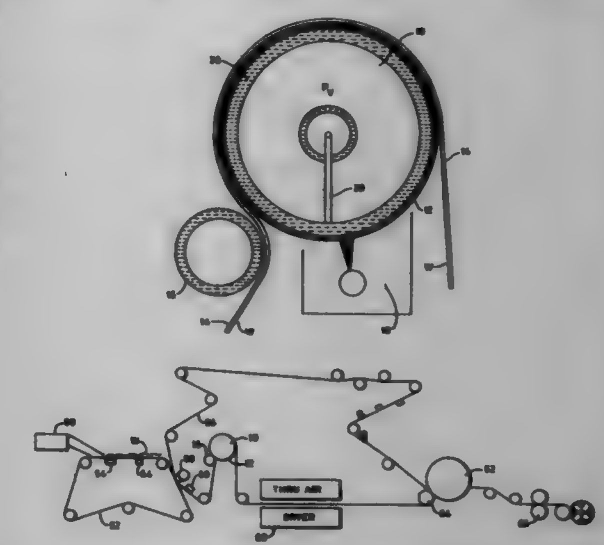

1. A system for removing water from a wet paper web during a paper web manufacturing process, comprising:
a rotating capillary dewatering roll that has a capillary membrane with capillary pores therethrough which have a substantially straight through, non-tortuous path, the capillary pores having a pore aspect ratio of from about 2 to about 20; and
means for lightly pressing a web to the capillary membrane to ensure hydraulic contact between the water contained in the web and the water in the pores of the capillary membrane without overall compaction of the web.

5,701,683
COUNTER FLOW COOLER
Donald M. Wilhelm, Merrimack, N.H., assignor to California Pellet Mill Company, Nashua, N.H.
Division of Ser. No. 681,257, Jul. 22, 1996. This application Nov. 13, 1996, Ser. No. 748,588
Int. Cl.⁶ F26B *7/00*
U.S. Cl. 34—394 **15 Claims**

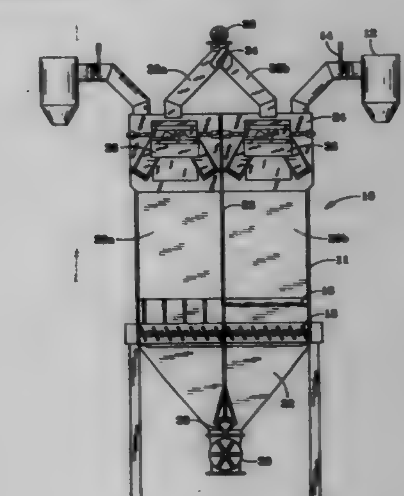

1. A method of cooling feed material in a counter flow cooler, the cooler including at least two cooling chambers, the method comprising:
admitting a supply of a first feed material into the cooling chambers;
passing cooling air through the cooling chambers;
discharging cooled first feed material from the cooling chambers;
stopping the admission of the first feed material into a first one of the cooling chambers;
continuing to discharge first feed material from the cooling chambers until the first cooling chamber is empty of the first feed material, then stopping the admission of first feed material into a second one of the cooling chambers, admitting a second feed material into the first cooling chamber and preventing the discharge of the second feed material from the first cooling chamber until all the cooling chambers are empty of first feed material;
after the second cooling chamber is empty of first feed material, admitting the second feed material into the second cooling chamber.

5,701,684
LINT COLLECTOR FOR CLOTHES DRIER
Hugh Griffith Johnson, Parnell, New Zealand, assignor to Fisher & Paykel Limited, Auckland, New Zealand
PCT No. PCT/NZ94/00094, § 371 Date Jun. 21, 1996, § 102(e) Date Jun. 21, 1996, PCT Pub. No. WO95/08016, PCT Pub. Date Mar. 23, 1995
PCT Filed Sep. 15, 1994, Ser. No. 615,218
Claims priority, application New Zealand, Sep. 15, 1993, 248667
Int. Cl.⁶ F26B *11/02*
U.S. Cl. 34—595 **9 Claims**

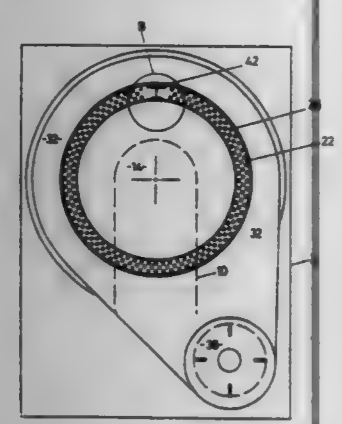

1. A clothes drying machine comprising a rotatable drum for receiving clothes to be dried, said drum having an air inlet and an air outlet, air movement means to cause air flow into said air inlet and through said drum and out said air outlet, a lint filter extending coaxially from said drum so as to rotate therewith about a circumference of said air outlet and adjacent to said air outlet having a lint receiving surface for receiving lint entrained in said airflow form said clothes, a container for containing lint removed from said surface, a stationary lint removal member provided in a passageway leading to said container adjacent to or in contact with a part of said lint receiving surface, said lint removal member and said lint receiving surface being moveable relative to each other by rotation of said drum for removing lint from said surface by a scraping or peeling action, the removed lint then being collected in said container for manual disposal.

5,701,685
TRIPLE-ACTION, ADJUSTABLE, REBOUND DEVICE
Mariner J. Pezza, 12 June Ave., Norwalk, Conn. 06850, assignor to Mariner J. Pezza, Norwalk, Conn.
Filed Jan. 23, 1997, Ser. No. 788,053
Int. Cl.⁶ A43B *3/10;13/28*
U.S. Cl. 36—7.8 **9 Claims**

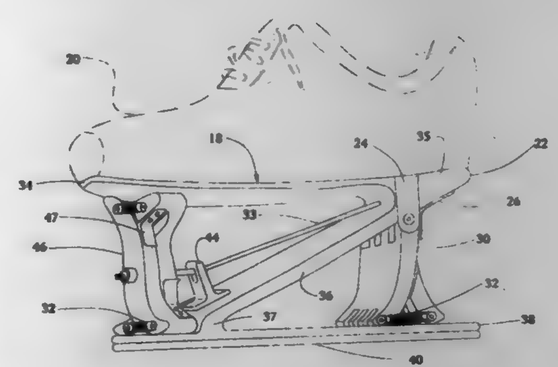

1. A spring-action sole construction comprising:
(a) a generally z-shaped platform of lightweight, and resiliently deformable material upon which a user's foot rests, said platform having a top plate spaced generally parallel above a base plate, both plates having a toe and heel end respectively at a toe and heel end of a shoe, and both plates having an upper and a lower surface, a diagonal plate extending downward from said heel end of said upper plate to said toe end of said base plate, said diagonal plate being laterally planar to the top and the base plates, said diagonal plate having an integral heel connection at said heel end of said top plate, said heel connection being centered laterally under a calcaneus of said user, said diagonal plate having an integral toe connection at said toe end of said bottom plate, said toe connection being positioned a predetermined distance from said toe end of said bottom plate, said platform having a length and width generally equal to a length and a width of said shoe, and said platform having a height generally equal to said width;
(b) a hinged leaf spring sandwiched between said heel ends of said top plate and said base plate, said spring comprising a pair of leaves, said leaves being generally rectangularly planar, both leaves having an upper end, said upper ends being pivotably secured contiguous to said heel connection and parallel thereto, said upper ends being longitudinally rounded, said ends having alternate, interlocking crenelations, and said ends having a centered aperture, said aperture pivotably secures a hinge pin, said pin axially engages said upper ends, said leaves having outwardly curved lower ends, said curved ends having opposing crenelations, said curved ends, each having an aperture extending laterally, said aperture pivotably secures a shaft, said shafts, acting in combination, pivotably secure outer links of a plurality of ringed elastics, said ringed elastics comprising an open ended chain of three links, the outer links being rigid, and a middle link being comprised of a plurality of endless, elastic belts;
(c) an x-shaped leaf spring having a lateral cross sectional area resembling the letter x, is sandwiched laterally between said toe ends of said top and said base plate, said x-shaped spring having two s-shaped, interlocking leaves, said leaves having upper and lower ends, said lower ends being slidably engaged within heretofore said predetermined distance, said upper ends being slidably engaged, in a lateral direction, to said under surface of said top plate on a line generally centered laterally under said user's metatarsal foot bones, both leaves having a vertically centered aperture extending through longitudinally at an inflection point, said aperture pivotably secures a shaft, said shaft emergent longitudinally from said platform, said shaft having a free end, said free end being laterally secured by a guide, said free end being mounted to said x-shaped spring, said leaves have opposing, interlocking cutouts concentric to said aperture, said cutouts extend outwards toward said curved ends, said cutouts having a plurality of planar surfaces towards said curved ends, said curved ends fixedly secure a plurality of screw studs, said studs being horizontally disposed on a plurality of longitudinal surfaces of said curved ends, and said studs pivotably engage the rigid outer links of a plurality of heretofore said ringed elastics, whereby
(d) said lower ends of said hinged leaf spring and said curved ends of said x-shaped leaf spring sequentially separate and contract in a rocking motion across a central support structure in response to forces urged by the user, absorbing the forces of impact and imparting thrust to the user.

5,701,686
SHOE AND FOOT PROSTHESIS WITH BENDING BEAM SPRING STRUCTURES
Hugh M. Herr, 20 Daniels St., Apt. 222, Malden, Mass. 02148, and Rustem Igor Gamow, 9 Canyon Park, Boulder, Colo. 80302
Continuation-in-part of Ser. No. 222,717, Apr. 4, 1994, abandoned, Ser. No. 47,872, Apr. 15, 1993, Pat. No. 5,367,790, and Ser. No. 726,891, Jul. 8, 1991, abandoned. This application Nov. 29, 1994, Ser. No. 346,867
Int. Cl.⁶ A43B *13/28*
U.S. Cl. 36—27 **4 Claims**

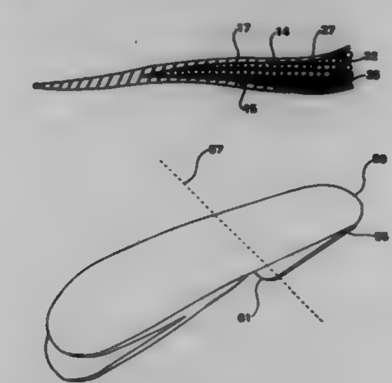

1. A sole system which comprises:
a heel spring formed by upper and lower bending beams attached at a single coupled region;
wherein each of said bending beams has a fore end and an aft end, a medial edge and a lateral edge, and an upper surface and a lower surface;
wherein said heel spring has a fore end and an aft end;
wherein said coupled region has a fore end and an aft end;
wherein said bending beams are rigidly attached within said coupled region;
wherein said coupled region is the only region of said heel spring in which a force exerted on one bending beam will influence the other bending beam;
wherein said heel spring has a single bending beam axis at said coupled region's aft end where the upper surface of the lower bending beam adjoins the lower surface of the upper bending beam along a continuous straight line from the lateral to the medial edges of said bending beams;
wherein each of said bending beams in use is capable of bending toward the other and storing energy in the region between said bending beam axis and said bending beam's aft end;
wherein said bending beams are made of a material such that said spring has an energy return of at least 70%; and
wherein at least one of said bending beam surfaces has a concave upward region on its aft end and a concave downward region on its fore end; and
wherein a minimum radius of curvature in said concave upward region is less than a minimum radius of curvature in said concave downward region.

5,701,687
THRUST PRODUCING SOLE AND HEEL STRUCTURE WITH INTERIOR AND EXTERIOR FLUID FILLED POCKETS
Karl M. Schmidt, Woodside; Stuart E. Jenkins, Thousand Oaks, both of Calif., and Harry W. Edwards, Barrington, Ill., assignors to Energaire Corporation, Pebble Beach, Calif.
Filed Jan. 2, 1996, Ser. No. 581,942
Int. Cl.⁶ A43B *13/20*
U.S. Cl. 36—29 **22 Claims**

1. A shoe sole and heel construction comprising:
a structure having an exterior ground-contacting surface and a bulge projecting from the exterior ground-contacting surface, the bulge defining a first pocket;
an expandable bladder defining a second pocket and disposed in the structure above the exterior ground-contacting surface to avoid contact with the ground in use;
the structure including a portion defining a passageway providing fluid communication between the pockets; and
fluid permanently disposed in the space jointly defined by the pockets and the passageway;
whereby at rest a foot in a shoe incorporating the structure is cushioned comfortably on the fluid in the first and second pockets.

5,701,688
PROTECTIVE SHOELACE COVER
Kevin J. Crowley, Brentwood, N.H., assignor to Fila U.S.A., Inc., Sparks, Md.
Filed Apr. 18, 1996, Ser. No. 634,404
Int. Cl.⁶ A43B *13/22;23/26;3/24*
U.S. Cl. 36—72 R **10 Claims**

1. A protective shoelace cover for substantially covering the shoelaces of a shoe, wherein the shoe comprises a sole and an upper having a throat, the shoelace cover comprising:
a generally triangular edge element sized to fit over the throat of the shoe, the edge element having an inner portion;
fastening means connected to the underside of the edge element for detachably securing the cover to the upper on opposite sides of the throat; and

a translucent window of deformable, shock-absorbing material connected to the inner portion of the edge element.

5,701,689
SNOWBOARD BOOT

Reinhard Hansen, Salzburg, Austria; Leon Widdison, Laufen, Germany, and Wolfgang Wurm, St. Georgen, Austria, assignors to Goodwell International Limited, Tortola, Virgin Islands (Br.)

Filed Oct. 5, 1995, Ser. No. 539,599

Claims priority, application Germany, Oct. 7, 1994, 44 35 959.4

Int. Cl.⁶ A43B *5/04*

U.S. Cl. 36—115 **16 Claims**

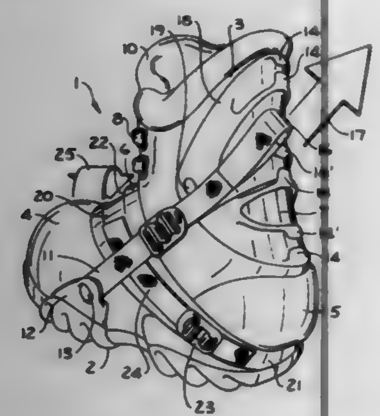

1. A snowboard boot for use with a snowboard, said boot comprising:
a sole;
an upper mounted on the sole and having a toe portion, an instep portion, a heel portion and a shaft extending upward from the heel portion, said upper having an exterior constructed of a flexible material and an interior constructed of a soft, padded material such that the shaft is capable of flexing movement relative to the sole in directions transverse to the sole;
a strap extending generally between the rear of the shaft and the sole, which strap is connected to the rear portion of the shaft and the sole free of force transmitting engagement with the upper between the rear of the shaft and the sole; and
a reinforcing element interposed between the strap and the rear of the shaft and being everywhere spaced apart from the sole of the boot with the flexible material of the upper everywhere interposed between the reinforcing element and the sole to allow flexing movement of the shaft relative to the sole in directions transverse to the sole.

5,701,690
DEVICE FOR FILLING A HOLE IN AN ICE RINK SURFACE

Raymond Miscio, RR#2 Minden, Ontario, Canada, K0M 2K0

Filed Apr. 16, 1996, Ser. No. 633,097

Int. Cl.⁶ E01H *5/12*

U.S. Cl. 37—219 **17 Claims**

1. A device for filling a hole in an ice rink surface, comprising: a chamber to receive a slush mixture therein; access means for depositing said slush mixture into said chamber; valve means at one end of said chamber for dispensing said slush mixture from said chamber; trigger means for opening said valve means so as to initiate the dispensing of said slush mixture; impression means adjacent said valve means for pressing said slush mixture into said hole, thereby to restore said ice rink surface, wherein said chamber has a lower end, said valve means being located at said lower end, said valve means including a valve portion, said valve portion having a housing with an aperture formed therein, and a valve

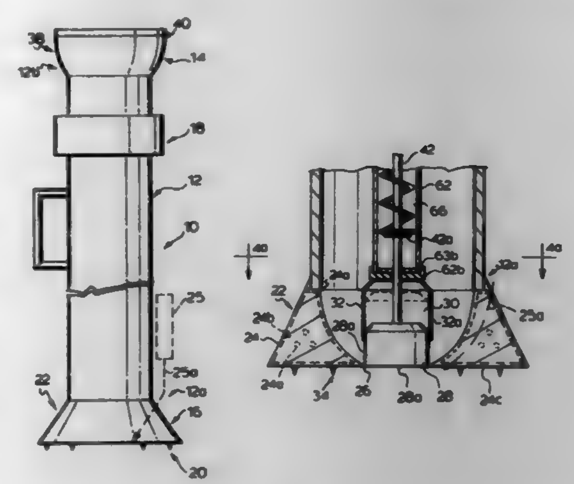

member dimensioned to fit within said aperture and movable from a closed position to an open position.

5,701,691
REGION LIMITING EXCAVATION CONTROL SYSTEM FOR CONSTRUCTION MACHINE

Hiroshi Watanabe; Toichi Hirata, both of Ushiku; Masakazu Haga, Ibaraki-ken; Eiji Yamagata, Ibaraki-ken; Kazuo Fujishima, Ibaraki-ken, and Hiroyuki Adachi, Tsuchiura, all of Japan, assignors to Hitachi Construction Machinery Co., Ltd., Tokyo, Japan

PCT No. PCT/JP95/01053, § 371 Date Jan. 31, 1996, § 102(e) Date Jan. 31, 1996, PCT Pub. No. WO95/33100, PCT Pub. Date Dec. 7, 1995

PCT Filed May 31, 1995, Ser. No. 596,103

Claims priority, application Japan, Jun. 1, 1994, 6-119874

Int. Cl.⁶ E02F *5/02*

U.S. Cl. 37—348 **21 Claims**

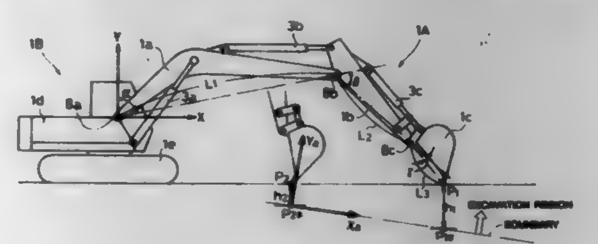

1. An excavation area limiting control system for limitingly controlling an area to be excavated in a construction machine, comprising a plurality of driven members (**1***a*–**1***f*) including a plurality of front members (**1***a*–**1***c*) which make up a multi-articulated type front device (**1A**) and are vertically rotatable, a plurality of hydraulic actuators (**3***a*–**3***f*) for respectively driving said plurality of driven members, a plurality of manipulation means (**204***a*–**204***f*; **4***a*–**4***f*) for instructing operation of said plurality of driven members, and a plurality of hydraulic control valves (**5***a*–**5***f*) driven in accordance with control signals from said plurality of manipulation means for controlling flow rates of a hydraulic fluid supplied to said plurality of hydraulic actuators, wherein said system further comprises:
(a) area setting means (**7**, **9***a*) for setting an area to be excavated by said front device (**1A**);
(b) first detecting means (**8***a*–**8***d*) for detecting status variables with regard to the position and posture of said front device;
(c) second detecting means (**270***a*–**271***b*; **270***a*) for detecting load pressures of particular front actuators (**3***a*, **3***b*; **3***a*) of said plurality of hydraulic actuators (**3***a*–**3***f*) which are associated with at least one or more particular front members (**1***a*, **1***b*; **1***a*);

(d) first calculating means (**9***b*) for calculating the position and posture of said front device based on signals from said first detecting means;
(e) signal modifying means (**209***c*, **9***d*–**9***i*, **209***j*, **9***k*, **210***a*–**211***b*; **10***a*–**11***b*; **12**) for, based on the control signals from the manipulation means (**204***a*, **204***b*; **4***a*, **4***b*) of said plurality of manipulation means which are associated with said front device and the values calculated by said first calculating means, carrying out calculation of a target speed vector (Vca) of said front device and modifying the control signals from the manipulation means (**204***a*, **204***b*; **4***a*, **4***b*) associated with said front device so that, when said front device is within said set area to be excavated and near the boundary of said set area, said front device is allowed to move in the direction along the boundary of said set area to be excavated and a moving speed of said front device in the direction toward the boundary of said set area to be excavated is reduced, and further said front device is allowed to move in the direction along the boundary of said set area to be excavated even when the front device reaches said boundary of the set area; and
(f) output modifying means (**209***j*, **209C***j*) for, based on signals from said second detecting means (**270***a*–**271***b*; **270***a*), further modifying, of the control signals modified by said signal modifying means, the control signals from the manipulation means (**204***a*, **204***b*; **4***a*, **4***b*; **204***a*; **4***a*) which are associated with said particular front members (**1***a*, **1***b*; **1***a*) so that said front device is moved as per said target speed vector (Vca) regardless of change in the load pressures of said particular front actuators (**3***a*, **3***b*; **3***a*).

5,701,692
CONTAINMENT WALL INSTALLATION PROCESS AND APPARATUS

Weldon Woodall, Jacksonville, Fla., assignor to Groundwater Control, Inc., Jacksonville, Fla.

Filed Jul. 3, 1996, Ser. No. 675,060

Int. Cl.⁶ E02F *5/10*

U.S. Cl. 37—353 **20 Claims**

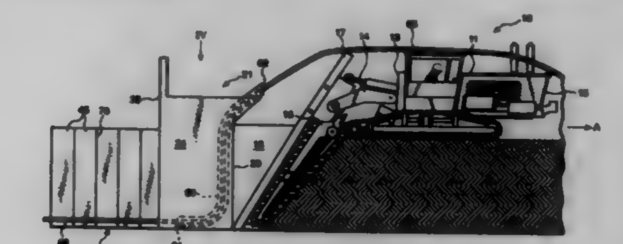

1. A method for installing a groundwater containment system utilizing a powered trenching apparatus, the apparatus having a main body defining front and rear ends; a boom coupled to the rear end thereof; a trenching tool coupled to the boom for displacing soil to define a trench; frame structure mounted with respect to the boom rearwardly of the trenching tool, said frame structure including opposing sidewalls defining a space therebetween, said space being separated into at least first and second adjacent compartments, each said compartment having an inlet opening and an exit opening, the method comprising the steps of:
advancing the trenching apparatus along the ground such that the trenching tool creates a single trench, with said frame structure advancing within the trench as the trench is being excavated,
feeding filter material into said second compartment through the inlet opening thereof,
inserting at least one impermeable wall panel into said first compartment through the inlet opening thereof,
wherein during the advancing step, said at least one wall panel passes through the exit opening of the first compartment and at least some of the filter material passes through the exit opening of the second compartment in such a manner that said at least one wall panel is disposed within the trench between a wall of the trench and filter material exiting said second compartment.

5,701,693
BERM CLEARING ATTACHMENT FOR ROAD CLEARING VEHICLES

George Dale Brocious, Mayport; Clifford Wayne Smith, and Wayne Carl Snyder, both of Punxsutawney, all of Pa., assignors to Edge Development, Inc., Mayport, Pa.

Filed Jan. 22, 1996, Ser. No. 589,643

Int. Cl.⁶ E02F *5/00*

U.S. Cl. 37—381 **2 Claims**

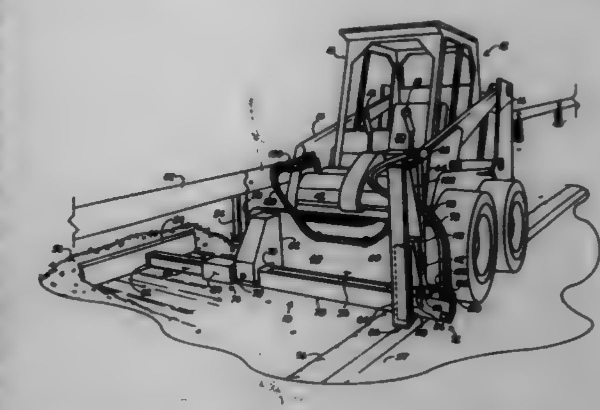

1. For use in combination with a road clearing vehicle, a berm clearing attachment capable of reciprocably driving a dozing blade generally laterally relative to the direction of travel of the vehicle on a road and road berm, comprising:
a support framework removably attachable to the road clearing vehicle;
an outer boom mounted to the support framework and extending transverse to the longitudinal axis of the road clearing vehicle, the outer boom having a first end and an opposite second end adjacent the road berm which defines the pivot point for the outer boom;
an inner boom disposed within the outer boom for selective slidable extension and retraction within the outer boom lateral to the longitudinal axis of the road clearing vehicle;
the inner boom coextensive with the outer boom so that a substantial portion of the inner boom can project past the outer boom during extension of the inner boom;
a blade removably attachable to the inner boom for side dozing the road berm;
a push cylinder disposed within the outer boom and the inner boom for selectively actuating the extension and retraction of the inner boom, the push cylinder having a first cylinder end secured to the first end of the outer boom and a rod substantially disposed within the cylinder for selective linear reciprocable movement therein to extend and retract the inner boom, the rod having a boom eye secured to the inner boom; and
means for pivoting the outer boom secured to the first end of the outer boom so that the blade can be raised or lowered for dozing the road berm.

5,701,694
TABLETOP ADVERTISING DISPLAY

Charles Michael Atkinson, Arkadelphia, Ark., assignor to People You Need, Inc., Arkadelphia, Ark.

Filed May 1, 1996, Ser. No. 643,250

Int. Cl.⁶ G09F *3/18*

U.S. Cl. 40—493 **3 Claims**

1. A tabletop advertising display for the presentation of selected advertising materials and for dispensing coupons to a patron of a place of business, comprising:
advertising display means for displaying the advertising materials to the patron;
coupon dispensing means for holding and dispensing coupons to the patron from a continuous flexible strip of coupons in roll form, said flexible strip having perforations between adjacent coupons to facilitate removal by the patron; and
receptacle means for holding articles for selection by the patron;

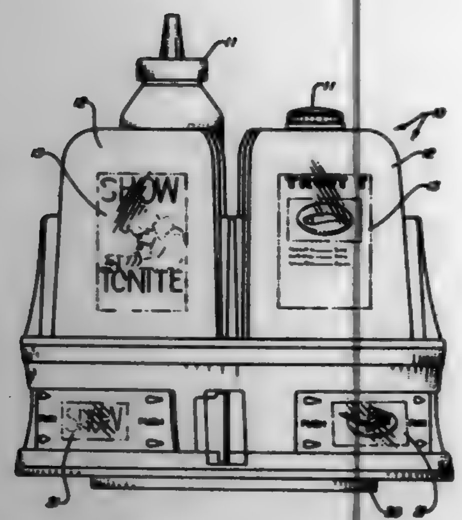

wherein said advertising display means and said receptacle means are removably attached to said coupon dispensing means; and
wherein said advertising display means, said receptacle means and said coupon dispensing means together comprise an advertising and dispensing assembly, further comprising rotation means for rotating the advertising and dispensing assembly to selectively present the advertising materials and the coupons to the patron; and
wherein said coupon dispensing means comprises a plurality of coupon roll dispensers; and
wherein said advertising display means comprises a plurality of advertisements and further wherein each of said plurality of advertisements is associated with at least one of said plurality of coupon roll dispensers whereby the subject matter of each of said advertisements is related to the use of a coupon dispensed by at least one of said coupon roll dispensers;
wherein said coupon dispensing means further comprises a coupon tray and a base plate, said coupon tray and said base plate having releasable interconnection means comprising a plurality of latching fingers disposed on said coupon tray having notches for interconnection with a corresponding plurality of slots disposed on said base plate; and
wherein each of said plurality of coupon roll holders comprises
a central spool for receiving a roll of coupons comprising a continuous flexible strip of coupons having perforations between adjacent coupons comprising a semi-circular segment between tear-away segments to facilitate removal by the patron;
a viewing slot for inspection of the quantity of coupons remaining in said coupon roll holder; and
a channel formed between an exterior wall terminating in a knife edge and a spring loaded feeder whereby said coupons are fed from said coupon roll for removal by the patron.

5,701,695
HEIGHT ADJUSTABLE FRAMED SIGN HOLDER
Wayne A. Current, Holmdel, N.J., assignor to International Visual Corp., Port Washington, N.Y.
Continuation of Ser. No. 498,218, Jul. 5, 1995, abandoned. This application Oct. 23, 1996, Ser. No. 735,824
Int. Cl.⁶ G09F *15/00*
U.S. Cl. 40—606 **6 Claims**

1. A framed sign holder for demountably receiving and displaying a sign at various heights comprising:
a base including two spaced-apart, upwardly-extending support elements; and
a frame with two spaced apart, vertical side members and a bottom portion connected between said side members, each side member having a hollow interior for slidably and frictionally receiving one of said support elements;
means for frictionally maintaining the position of each of said support elements within the hollow interior of each of said vertical side members, said means disposed entirely within the hollow interior of each of said side members so that said frame is selectively raised and lowered along said upwardly-extending support elements and maintained in position by friction to display the sign at various heights, wherein the frame may be lowered so that the support elements are disposed entirely within the side members and thus hidden from view.

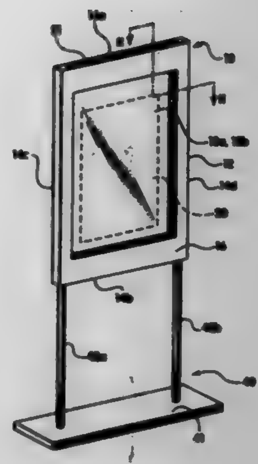

5,701,696
CARD HOLDER
Richard C. Cloutz, 4 High Pine Ct., Cockeysville, Md. 21030
Filed Jun. 7, 1995, Ser. No. 476,107
Int. Cl.⁶ G09F *3/18*
U.S. Cl. 40—642.02 **20 Claims**

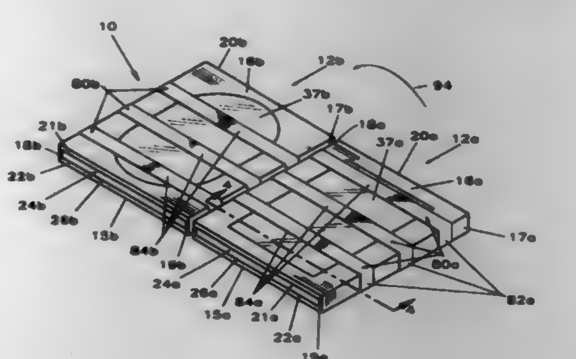

1. A card device for receiving one or more cards, comprising:
at least two plates, each of said plates having a front face and a rear face, at least one of said plates having a mounting structure for receiving and supporting one of the cards, and means for permitting both faces of one of the cards to be viewed, said permitting means located on said at least one of said plates: and
said card device having at least three straps interconnecting said plates, each of said straps having a pair of opposite ends attached to said plates and an unattached medial portion, said medial portion of at least one of said straps overlying one of said plates, and said medial portion of at least another said straps overlying the other of said plates, said plates being manipulable such that the medial portions of said straps can be reoriented to overlie the opposite plate; and
wherein said means for permitting viewing of both faces of one of said cards includes an opening which extends through said front and rear faces.

5,701,697
FRAME
Takeo Komamura, No. 207, Nakakanasugi 3-chome, Matsudo-shi, Chiba, Japan
Continuation of Ser. No. 88,949, Jul. 12, 1993, Pat. No. 5,438,778, which is a continuation of Ser. No. 904,932, Jun. 26, 1992, Pat. No. 5,279,056, which is a continuation of Ser. No. 580,222, Sep. 10, 1990, Pat. No. 5,189,820. This application Mar. 13, 1995, Ser. No. 403,167
Claims priority, application Japan, May 23, 1990, 2-131157
Int. Cl.⁶ G09F *1/12*
U.S. Cl. 40—791 **4 Claims**

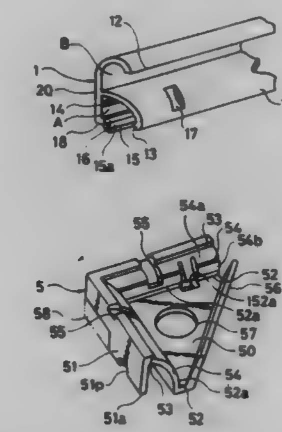

1. A frame, comprising:
a plurality of frame elements, each including an intermediate partition formed longitudinally along a side surface of a frame element side plate, a front engaging section extending over the intermediate partition and formed along an upper edge of said side plate and defining a predetermined interval provided with respect to said intermediate partition for accommodating an object to be contained, and an engaging pawl provided at a front end of said intermediate partition; and
a plurality of connecting elements each cooperating with two of said frame elements to define said frame, each connecting element including a frame element fitting section and an angular-movement stoppage section provided orthogonally to the frame element fitting section, the angular-movement stoppage section being formed for engaging with an engaging pawl provided at a front end of the intermediate partition of a cooperating frame element to hold said cooperating frame element in an engaged position with respect to the corresponding connecting element.

5,701,698
TRIGGER MECHANISM FOR FIREARMS
Horst Wesp, and Peter Dallhammer, both of Ulm, Germany, assignors to Carl Walther GmbH, Ulm, Germany
Filed Feb. 23, 1996, Ser. No. 627,225
Claims priority, application Germany, Mar. 1, 1995, 195 07 052.6
Int. Cl.⁶ F41A *19/35*
U.S. Cl. 42—69.02 **18 Claims**

1. A trigger mechanism for hammerless hand firearm comprising a trigger housing, a trigger pivotally mounted in a stock of the firearm, a trigger arm within said trigger housing and connected to and actuated by said trigger, an axially displaceable spring-loaded firing pin and a catch pawl to hold said firing pin in a cocked position, a support lever between said catch pawl and said trigger arm, said support lever engageable with and maintaining said catch

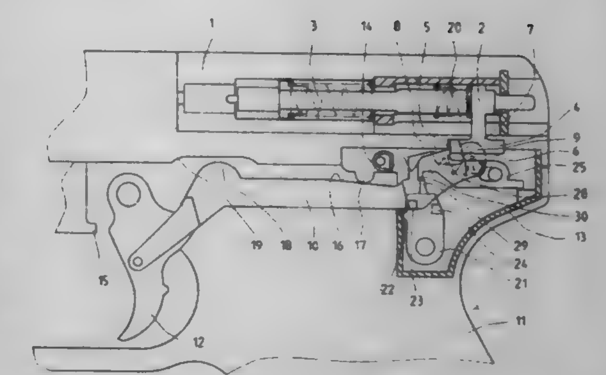

pawl in a position for single-action operation and is disengageable for double-action operation.

5,701,699
MANUFACTURED SEED WITH ENHANCED PRE-EMERGENCE SURVIVABILITY
William C. Carlson, Olympia; Jeffrey E. Hartle, Federal Way; Kathy Salatas, Tacoma, all of Wash.; Amy Harris, San Antonio, Tex., and Willis R. Littke, Falls City, Wash., assignors to Weyerhaeuser Company, Tacoma, Wash.
Continuation-in-part of Ser. No. 781,773, Oct. 23, 1991, Pat. No. 5,427,593, which is a continuation-in-part of Ser. No. 604,656, Oct. 26, 1990, Pat. No. 5,236,469. This application Jun. 7, 1995, Ser. No. 485,986
Int. Cl.⁶ A01C *1/06;* **C12N** *5/04*
U.S. Cl. 47—57.6 **59 Claims**

1. A manufactured seed comprising:
a totipotent plant tissue sufficiently developed to comprise a radicle and a shoot; and
a manufactured seed coat enclosing the totipotent plant tissue comprising a first seed-coat portion that is impenetrable by the totipotent plant tissue upon germination of the totipotent plant tissue except for an orifice defined by the first seed-coat portion, and a second seed-coat portion comprising an end seal that seals the orifice and is penetrable or dislodgable by the radicle upon germination of the totipotent plant tissue, wherein the manufactured seed coat is water-impermeable until the radicle penetrates or dislodges the end seal.

5,701,700
METHOD FOR STORING GEL-COATED SEEDS
Yasushi Kohno, Shizuoka; Masayoshi Minami, and Riichi Minamiguchi, both of Osaka, all of Japan, assignors to Yazaki Corporation, Tokyo, Japan
Filed Jul. 12, 1996, Ser. No. 679,263
Claims priority, application Japan, Jul. 14, 1995, HEI 7-178411
Int. Cl.⁶ A01C *1/06;21/00;1/00;* **A01B** *79/00*
U.S. Cl. 47—57.6 **5 Claims**

1. A method for storing gel-coated seeds having a gel coat comprising an aqueous gel having been water-insolubilized by a metal ion in a coagulating solution, which comprises storing the gel-coated seeds in an aqueous solution containing said metal ion, said aqueous solution containing said ion at a lower concentration than in said coagulation solution, wherein the aqueous solution has an osmotic pressure that provides substantially no influence on compressive breaking strength of the gel coat, and the gel-coated seeds are stored at a temperature of from 0° to 10° C.

5,701,701
SAFETY GATE
Robert M. Desrosiers, 113 Miller St., Middleborough, Mass. 02346
Filed Aug. 15, 1996, Ser. No. 698,517
Int. Cl.⁶ E05C *7/06*
U.S. Cl. 49—116 18 Claims

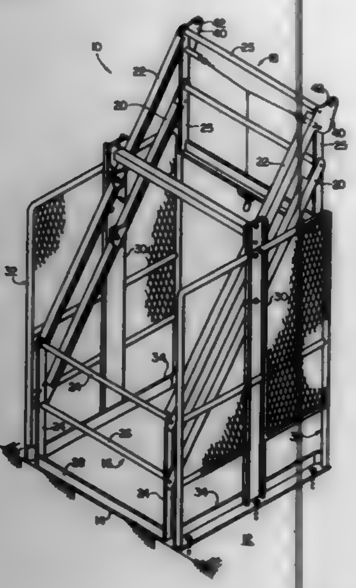

1. A safety gate for limiting access to a work area, the safety gate comprising:
a support; and
a pair of spatially opposed gates pivotally connected to the support, such that as one gate pivots up, the other gate pivots down, each pivoting gate remaining in a position substantially parallel to the position of the other pivoting gate;
wherein the spatially opposed gates are separated by a linkage pivotally mounted at its midpoint to the support;
wherein the each of the opposed gates is pivotally connected to the linkage.

5,701,702
PET DOOR
Alister Peter Reid, London, and Christopher Sumner, Merseyside, both of England, assignors to Reilor Limited, Lancashire
Filed Mar. 26, 1996, Ser. No. 622,664
Claims priority, application United Kingdom, Apr. 6, 1995, 9507167
Int. Cl.⁶ E05D *15/48*
U.S. Cl. 49—169 14 Claims

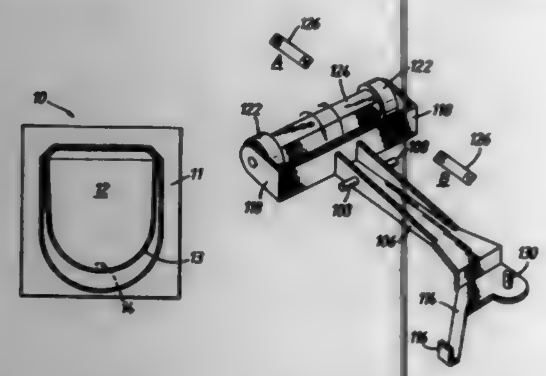

1. A pet door with a frame defining an access aperture and an aperture-closing flap pivotally mounted therein, wherein the pet door has latch means to bar the flap from opening in at least one direction and control means for disabling the latch means to permit the flap to open in said direction, the latch means comprising a catch and a collapsible support normally arranged to maintain the catch in a flap-barring position, and the control means being magnetically-responsive and operable, when a magnetic key means is operatively juxtaposed with the pet door, to allow the support to collapse and enable the catch to be moved from the flap-barring position to permit the flap to open in said direction, characterised in that the control means include an elongate magnet mounted to rotate freely about its major axis.

5,701,703
PANEL CONNECTOR APPARATUS
Thomas J. Luedke, Apple Valley; Randy G. Aagaard, Richfield; Carl A. Niemi, Excelsior, and Andrew J. Shea, Eden Prairie, all of Minn., assignors to SICO Incorporated, Minneapolis, Minn.
Division of Ser. No. 218,910, Mar. 28, 1994, abandoned, which is a division of Ser. No. 743,154, Aug. 9, 1991, Pat. No. 5,325,640. This application Jun. 7, 1995, Ser. No. 487,710
Int. Cl.⁶ B25G *3/20*; F16B *2/04*
U.S. Cl. 52—36.5 13 Claims

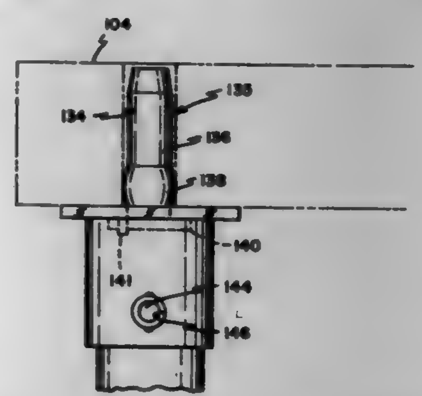

1. A device for attaching a panel to a frame, in combination with the panel the panel having a cylindrical passage extending between faces of the panel, the device comprising:
a flexible base portion configured to be proximate the frame;
a cylindrical member configured for inserting into and through the passage to an upper face of the panel, the cylindrical member including a lower portion having a diameter less than a diameter of the cylindrical passage, and extending from the base portion;
a pliable member surrounding the lower portion of the cylindrical member in the cylindrical passage;
wherein axially downward movement of the cylindrical member compresses the pliable member relative to the base portion, thereby expanding the pliable member radially and frictionally engaging the passage and retaining the panel.

5,701,704
DOCK DEVICE, PARTICULARLY FOR MAINTAINING AND OVERHAULING AIRCRAFT
Albert Landes, Reichenberg, Germany, assignor to Mero-Raumstruktur GmbH & Co., Wurzburg, Germany
Filed Jun. 6, 1995, Ser. No. 465,984
Claims priority, application Germany, Jun. 13, 1994, 44 20 502.3
Int. Cl.⁶ E04B *1/346*
U.S. Cl. 52—64 8 Claims

1. Dock device for maintaining and overhauling a commercial aircraft having a longitudinal axis, said dock device comprising at least two lateral dock parts spaced from one another to form an area of passage for an aircraft, each lateral dock part being connected by a suspension device to a supporting framework installed

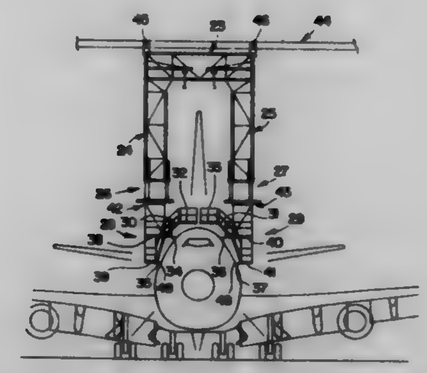

above the area of passage so as to form a supporting portal structure which, is positioned in the area of passage, is displaceable in the direction of the longitudinal axis of the aircraft, the lateral dock parts each having a moveable bridge part such that, when the bridge parts are moved apart from one another, the area of passage is cleared between the lateral dock parts and, when the bridge parts are moved toward one another, a bridge deck is created between the lateral dock parts.

5,701,705
PREFABRICATED MODULAR PORTABLE LIVESTOCK SHELTER
Richard L. Davis, and Philip G. Balch, both of Topeka, Kans., assignors to Land Resource Associates, Topeka, Kans.
Filed Jul. 26, 1996, Ser. No. 687,639
Int. Cl.⁶ E04B *1/346*
U.S. Cl. 52—68 3 Claims

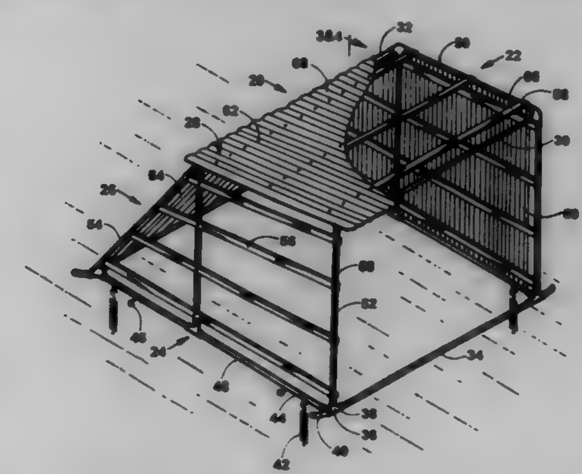

1. A prefabricated modular portable livestock shelter comprising:
a. a pair of spaced apart parallel ground engaging skids;
b. a pair of oppositely placed end walls extending upwardly and detachably connected to said ground skids;
c. towing means connected to said side walls for purposes of transporting said shelter from one location to another;
d. a pair of spaced apart parallel side rails detachably connected to said end walls;
e. a side wall detachably connected to said side rail;
f. multiple side wall locks attached to said side wall;
g. multiple tubular arms detachably connected to said side wall;
h. a roof detachably connected to said end walls;
i. said structure having an open side for free ingress and egress of livestock disposed between said end walls and said side wall and said roof and the underlying ground surface.
j. multiple pairs of middle rails detachably connected in a perpendicular fashion to said skids and side rails and roof for assembling multiple shelters together;
k. multiple posts detachably connected to said skids and extending upwardly to and detachably connected to said side rails and middle rails;
l. multiple hinged sleeves removedly enveloping said side rail and detachably attached to said side wall;
m. multiple earth anchors detachably fastened to said end walls and middle rails and secured into the ground;
n. multiple tubular arms detachably attached to said side wall;
o. multiple tubular connectors detachably attached to said skids, end walls, side rails, middle rails and posts;
p. multiple fasteners received in said tubular connectors for detachably connecting said skids, end walls, side rails, middle rails and posts, said fasteners being of sufficient length to extend through said tubular connectors;
q. multiple fasteners for detachably connecting said roof to said end walls and middle rails; said fasteners being of sufficient length to extend through said end walls and middle rails;
r. multiple fasteners received in said side wall locks.

5,701,706
UNDERGROUND SERVICE BAY FOR VEHICLES AND PROCESS FOR CONSTRUCTING SAME
William Kreysler, 363 El Faisan Dr., San Rafael, Calif. 94903; Serge Labesque, 2300 Warm Springs Rd., Glen Ellen, Calif. 95442; Kurt Jordan, 242 B. Evergreen Ave., Mill Valley, Calif. 94941; Mark Lazzich, 925 Birkdale Ct., Windsor, Calif. 95492; David Colombo, 3292 Holland Dr., Santa Rosa, Calif. 95404; Edward J. Marcus, 1928 San Salvador Dr., Santa Rosa, Calif. 95403, and Richard Koenn, 4201 Pressley Rd., Santa Rosa, Calif. 95404
Filed Feb. 23, 1995, Ser. No. 404,202
Int. Cl.⁶ E02D *29/00*; E04H *6/42*
U.S. Cl. 52—169.6 9 Claims

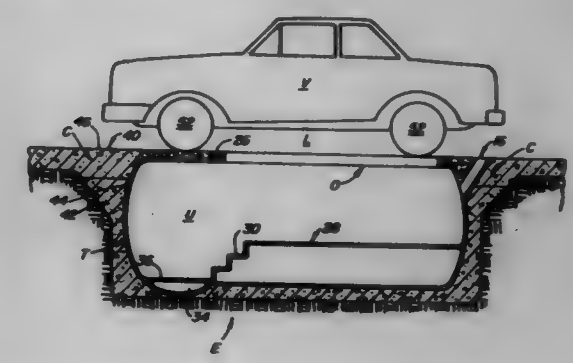

1. An underground service bay placed within the ground comprising:
a prefabricated unit for placement in the ground including a cylindrical tank body having a major axis of the cylindrical tank body parallel to a longitudinal direction of the underground service bay;
an access opening defined in an upper portion of the cylindrical tank body for exposure to a vehicle underside, the access opening having a width relative to the longitudinal direction of the underground service bay to occupy less than a diameter of the cylindrical tank body to enable the cylindrical tank body to have paired upwardly exposed tank sides on either side of the access opening;
the cylindrical tank body having a arcuate cross section normal to the major axis of the cylindrical tank body to provide an increased diameter below the access opening;
paired spaced apart vehicle supporting tracks defined over the upwardly exposed tank sides of the cylindrical tank body adjacent the access opening;
means for holding the prefabricated unit to the ground including a cap maintaining the cylindrical tank body within the ground against buoyant forces acting on the prefabricated unit.

5,701,707
BONDED SLAB POST-TENSION SYSTEM
Felix L. Sorkin, P.O. Box 1503, Stafford, Tex. 77477
Filed May 6, 1996, Ser. No. 642,853
Int. Cl.⁶ E04C *5/12*
U.S. Cl. 52—223.13 **17 Claims**

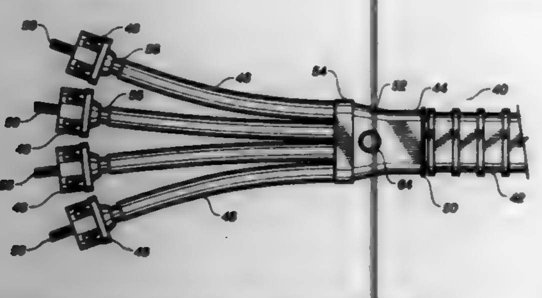

7. A bonded slab post-tension system comprising:
a plurality of tendons;
a duct extending around said plurality of tendons;
a transition member connected to said duct and extending around said plurality of tendons, said transition member having a plurality of tubular tendon ports extending outwardly from an end opposite said duct, said plurality of tendons extending through said plurality of tendon ports;
a plurality of tubular members affixed to said plurality of ports and extending outwardly therefrom, said plurality of tendons extending through said plurality of tubular members, each of said plurality of tubular members having an inner diameter slightly greater than an outer diameter of each of said plurality of tendon ports, each of said plurality of tubular members being slidably received in liquid-tight relationship onto an exterior surface of each of said plurality of tendon ports; and
a plurality of anchors attached to an end of said plurality of tubular members, said plurality of tendons having an end affixed to said plurality of anchors, said duct and said transition member and said plurality of tubular members being formed of a polymeric material.

5,701,708
STRUCTURAL FOAM CORE PANELS WITH BUILT-IN HEADER
Emil M. Taraba, and Jeffrey M. Taraba, both of 1862 Hollow Road, Fonthill, Ontario, Canada, L0S 1E0
Filed Apr. 9, 1996, Ser. No. 629,778
Int. Cl.⁶ E04C *2/32*
U.S. Cl. 52—309.9 **10 Claims**

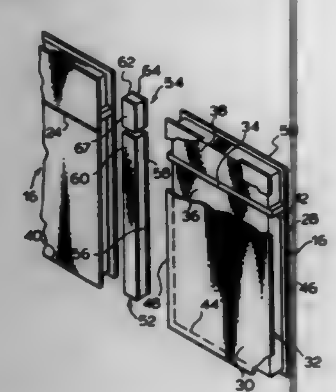

1. A structural foam core panel for use in building construction having inner and outer structural skins with interconnecting insulating foam core to form a structural building unit of standard building height and width such that when several panels are erected and interconnected in series, a load bearing wall is formed; said panel having a top load carrying header plate in contact with and bridging and secured to said inner and outer structural skins with said foam core provided above and below said header plate, said top header plate spanning the width of said panel and extending parallel to a bottom edge of said panel, said header plate having an underside spaced from said panel bottom edge a predetermined height to provide thereby load carrying support above a window opening or a door opening subsequently cut in said panel after interconnection of several panels in erecting a perimeter load bearing building wall.

5,701,709
INSULATION SUPPORT SYSTEM FOR METAL FRAME CONSTRUCTION AND METHOD RELATING THERETO
John R. Dixon, III, 2509 General Forrest Cir., Virginia Beach, Va. 23454
Filed Nov. 27, 1996, Ser. No. 757,302
Int. Cl.⁶ E04B *1/74*
U.S. Cl. 52—404.1 **18 Claims**

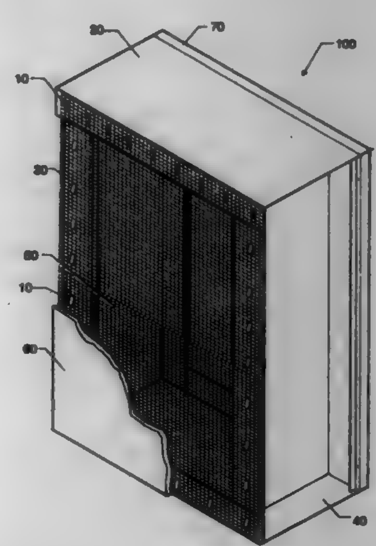

1. A blown-in insulation support system for metal frame construction comprising:
an insulation support material selected from the group consisting of: a nylon netting; a fabric; a reinforced material; and a thin translucent cloth material for holding insulation; and
a metal frame comprising a plurality of metal members, wherein at least two opposing metal members have at least one portion thereof stamped out to protrude on one side and an exterior sheathing attached to an opposing side, and wherein each stamped out protrusion engages and tensions the insulation support material.

5,701,710
SELF-SUPPORTING CONCRETE FORM MODULE
Tim Cyril Tremelling, Rigby, Id., assignor to Innovative Construction Technologies Corporation, Idaho Falls, Id.
Filed Dec. 7, 1995, Ser. No. 568,744
Int. Cl.⁶ E04B *2/32*
U.S. Cl. 52—426 **10 Claims**

1. A freestanding form module for receiving flowable materials to make a wall which includes the form module, the form module comprising:
at least two spaced-apart form members having opposed interior form surfaces, each form member including a wall portion and a rib portion extending from the wall portion toward another one of said form members; and
at least one monolithic molded plastic tie member having opposed ends with a web member between the ends extending along a web axis, a bearing member at each end of the tie member, extending generally transverse to the web axis and embedded in the wall portion of a respective form member with the form member formed around so as to captively enclose the bearing member and each end of the tie member having a stabilizing member extending generally transverse to the web axis, spaced from the bearing member and embedded in the rib portion of a respective form member adjacent the interior form surface thereof with the form member formed around so as to captively enclose the stabilizing member.

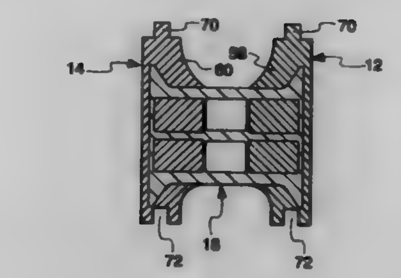

5,701,711
HANGER ASSEMBLY FOR LAGGING PANEL
Gary John Bases, Copley; Roger A. Detzel, Norton; Douglas James Devault, Rootstown, all of Ohio, and William Joseph Ferkile, St. Petersburg, Fla., assignors to The Babcock & Wilcox Company, New Orleans, La.
Filed Jul. 22, 1996, Ser. No. 681,188
Int. Cl.⁶ E04B *2/30;1/74*
U.S. Cl. 52—506.03 **1 Claim**

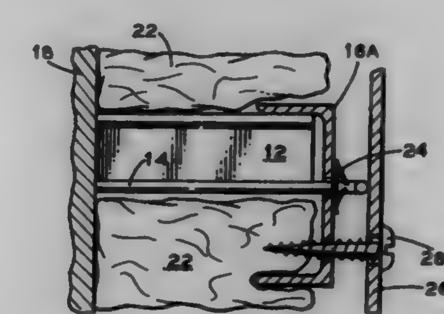

1. A hanger assembly for supporting a lagging panel from a hot surface, comprising:
a. a plurality of angle irons attached to the hot surface;
b. a first set of pins attached to the hot surface at approximately the same level as said angle irons;
c. a first subgirt received on said angle irons and rigidly attached to only one of said angle irons, said subgirt having a plurality of bores such that one end of said first set of pins extend through the bores in said subgirt;
d. a second set of pins attached to the hot surface and spaced apart from said first set of pins;
e. a second subgirt having a plurality of bores such that one end of said second set of pins extend through the bores in said second subgirt;
f. means for securing said subgirts on said pins; and
g. means for attaching a lagging panel to said subgirts.

5,701,712
DOUBLE-TOP GARMENT
Alfred Frederick Andersen, 467 River Rd., Eugene, Oreg. 97404
Filed Jun. 1, 1995, Ser. No. 457,139
Int. Cl.⁶ A41B *1/00*
U.S. Cl. 2—69 **1 Claim**

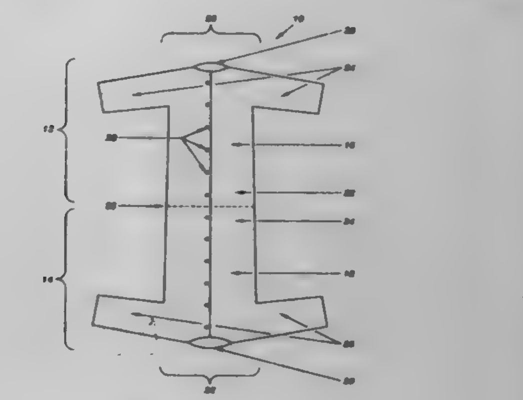

1. A garment comprising a first garment portion and a second garment portion, the first garment portion comprising:
a first body portion for covering the upper section of a wearer's body;
a first shoulder region at one end of said first body portion and having a first pair of sleeves and a first neck opening;
a first tail portion at the other end of said first body portion;
and wherein the second garment portion comprises:
a second body portion for covering the upper section of a wearer's body;
a second shoulder region at one end of said second body portion and having a second pair of sleeves and a second neck opening;
a second tail portion at the other end of said second body portion;
wherein the first tail portion is permanently attached to the second tail portion such that the second garment portion forms a mirror image of the first garment portion and serves as an insulating pad or spare garment when tucked into a lower body garment of a wearer;
and fastening means for garment extending from the first neck opening to the second neck opening.

5,701,713
ADJUSTABLE TRUSS
Daniel J. Silver, 3117 Broadway, Apt. 44, New York, N.Y. 10027
Filed Mar. 29, 1996, Ser. No. 626,766
Int. Cl.⁶ E04C *3/02;* **E04B** *1/343*
U.S. Cl. 52—645 **24 Claims**

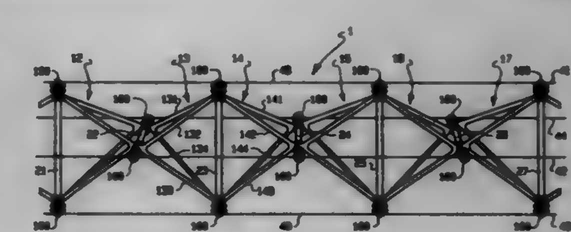

1. An adjustable truss structure comprising:
(a) a plurality of truss elements; and
(b) hinges pivotally connecting at least three successive truss elements, wherein not all hinges are parallel;
wherein at least one said hinge has a means for adjusting the angle between its associated truss elements.

5,701,714
WROUGHT IRON GRATING ASSEMBLY
Alexander Dietrichs, Weinheim, Germany, assignor to bima Industrie-Service GmbH, Mannheim, Germany
Filed Apr. 24, 1996, Ser. No. 636,945
Claims priority, application Germany, Apr. 27, 1995, 295 07 111 U
Int. Cl.[6] E04C *2/38*
U.S. Cl. 52—665 **11 Claims**

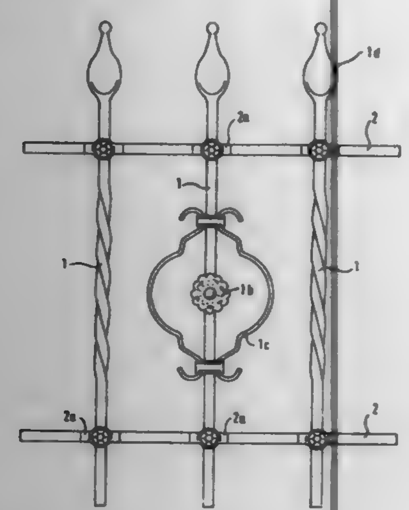

1. A wrought iron grating assembly, comprising:
a plurality of longitudinal bars in spaced-apart relationship;
a plurality of crossbars connection to the longitudinal bars, each one of the crossbars being formed at a crossing point with the longitudinal bars with an arched section receiving the longitudinal bars at least partially in a form-fitting manner;
threaded fastening means attaching the crossbars to the longitudinal bars at each crossing point; and
means for non-detachably securing the fastening means in place.

5,701,715
TIE CONNECTOR FOR MODULAR BUILDINGS
William Cecil Masters, Lakeland, Fla., and William J. Kalker, Jr., Monroe, Conn., assignors to Building Technologies, Inc., Bartow, Fla.
Continuation of Ser. No. 249,622, May 26, 1994, abandoned. This application Nov. 21, 1995, Ser. No. 561,093
Int. Cl.[6] E04B *1/38*
U.S. Cl. 52—698 **7 Claims**

1. A tie connector joining a factory made building to a ground anchor, the factory made building having a support member said tie connector affixed to the support member, and a hurricane strap connected to said tie connector and ground anchor, the tie connector comprising:
(a) an upper body section extending in a substantially vertical plane; and,
(b) a mounting plate attached to the upper body section, perpendicular thereto and coextensive with a surface of said support member of a factory made building; and,
(c) a lower body section connected to the upper body section, distal the mounting plate, having a slot receiving the hurricane strap; and,

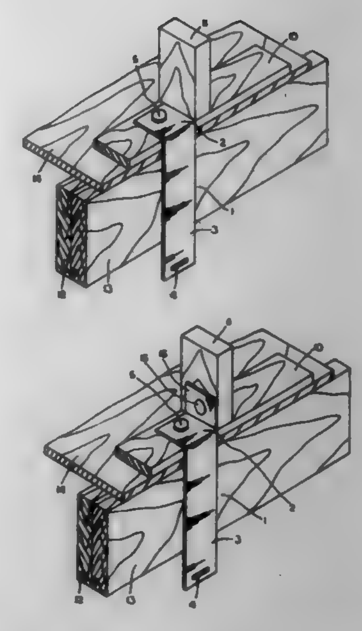

(d) means for securing the mounting plate against said coextensive surface of the support member.

5,701,716
TIMBER CONNECTING SYSTEM AND TIMBER CONNECTING ELEMENT
Werner Thoss, Nagold, Germany, assignor to Kerl Holzbau GmbH, Niedernhall, Germany
PCT No. PCT/EP95/01112, § 371 Date Jan. 19, 1996, § 102(e) Date Jan. 19, 1996, PCT Pub. No. WO95/26446, PCT Pub. Date Oct. 5, 1995
PCT Filed Mar. 24, 1995, Ser. No. 553,639
Claims priority, application Germany, Mar. 26, 1994, 44 10 534.7; Mar. 26, 1994, 44 10 535.5
Int. Cl.[6] E04B *1/38*
U.S. Cl. 52—713 **6 Claims**

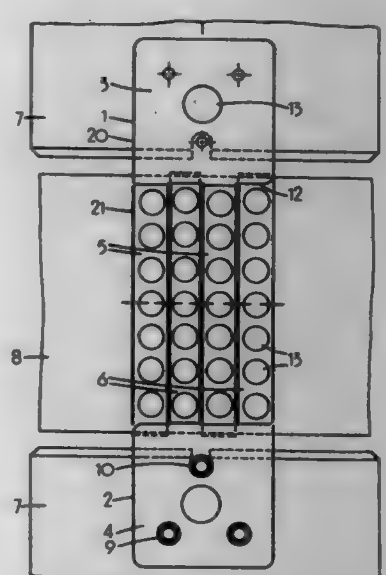

1. A timber connecting system for wood structures, said system comprising, in combination with a post and a plurality of wooden beams:
at least one first connecting element for connecting said post to one of said wooden beams, said first connecting element having:

two spaced-apart ring bands of substantially the same width adapted to encircle said post one above another and open at one side of the bands and of internal diameters corresponding to an external diameter of the post,
a pair of mutually juxtaposed fastening straps for receiving said one of said beams between them, said straps being connected to corresponding ends of said bands and interconnecting said bands while extending away from said post, said bands being spaced by a distance at least equal to said width, said straps being of a width greater than the widths of said ring bands, and
fastening means on said straps for securing said straps to said one of said beams, said fastening means being disposed symmetrically with respect to a longitudinal axis through said first connecting element extending along and located between said straps perpendicular to said post so that upon rotation of said first connecting element through 180° about said axis there is no change in positions of said fastening means relative to said one of said wooden beams; and
at least one second connecting element for securing two of said wooden beams together, said second connecting element including:
two U-shaped retaining parts each receiving a respective one of said wooden beams and having closed ends adjacent one another, and
pivot means interconnecting said closed ends to enable said retaining parts to rotate about a longitudinal axis of said second connecting element.

5,701,717
ASSEMBLY OF A LOADING MEANS AND A STRIP STACKER
Heinz Gutknecht, Epe, Netherlands, assignor to VMI Epe Holland B.V., Netherlands
Filed Dec. 11, 1996, Ser. No. 763,422
Claims priority, application Netherlands, Dec. 11, 1995, 1001866
Int. Cl.[6] B65B *63/04*
U.S. Cl. 53—117 **6 Claims**

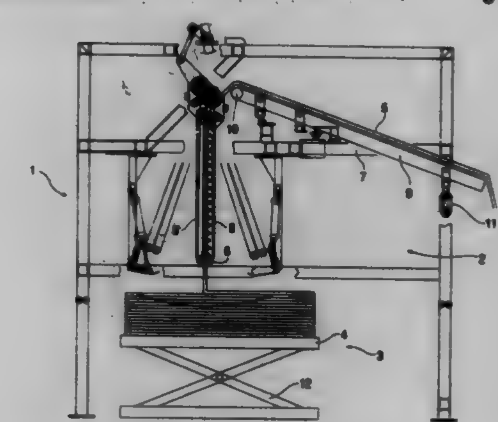

1. Assembly comprising:
a feed conveyor having an input end and an output end for transporting an unvulcanized rubber strip in a transport direction;
a strip stacker comprising a depositing mechanism having a receiving end for receiving the unvulcanized rubber strip from the feed conveyor, a depositing end and a pair of conveyor belts for transporting the unvulcanized rubber strip vertically therebetween from the receiving end to the depositing end, the depositing mechanism being provided with means for reciprocally moving the depositing end;
loading means with a horizontal loading surface for receiving the unvulcanized rubber strip from the depositing end of the depositing mechanism, said loading means being provided with means for variably adjusting the distance between the depositing end and the loading surface; and
means for moving the output end of the feed conveyor substantially transversely across the transport direction.

5,701,718
PROCESSING MACHINE, PARTICULARLY A PACKING MACHINE FOR CIGARETTES OR SIMILAR
Valter Spada, Marzabotto, Italy, assignor to Sasib S.p.A., Bologna, Italy
Filed Jul. 19, 1996, Ser. No. 684,208
Claims priority, application Italy, Aug. 2, 1995, GE95A0086
Int. Cl.[6] B65B *19/02;59/04*
U.S. Cl. 53—201 **11 Claims**

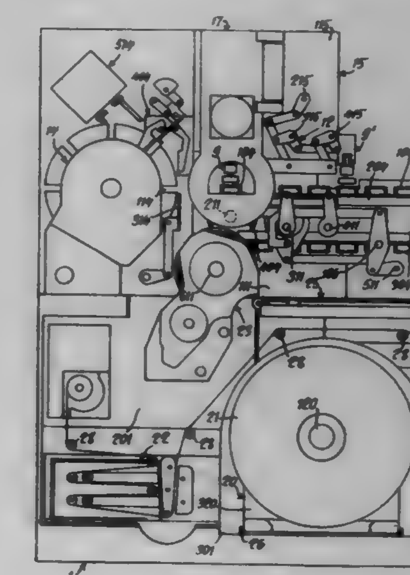

1. A processing machine which performs various steps of processing comprising:
a bed having an upper support and lower housing beneath said upper support;
first and second drive units mounted to said bed which have respective first and second output members which produce respective first and second driving motions; and
a plurality of upper and lower operating units which execute a step of the processing, said upper and lower operating units being synchronized with one another and following a predetermined system of operation,
each said operating unit being of modular construction, and including:
a) a conversion unit which converts, transfers and/or distributes an associated one of said first or second driving motions,
b) a removable input coupling means for removably connecting an associated one of said first and second output members to said conversion unit,
c) an operation member which performs the associated step,
d) a removable output coupling means for removably coupling the driving motion connected to said conversion unit to said operation member, and
e) a fixing means for removably fixing said operating unit at a predetermined position (i) to said upper support for respective said upper operating units and (ii) to said lower housing for respective said lower operating units.

5,701,719
LOADING DEVICE
Helmut Neukam, Hausmannstätten, Austria, assignor to P.E.E.M. Förderanlagen Gesellschaft m.b.H., Graz, Austria
Filed Feb. 22, 1996, Ser. No. 604,860
Claims priority, application Austria, Mar. 31, 1995, 581/95
Int. Cl.⁶ B65B *1/04;3/04;5/00*
U.S. Cl. 53—247 **5 Claims**

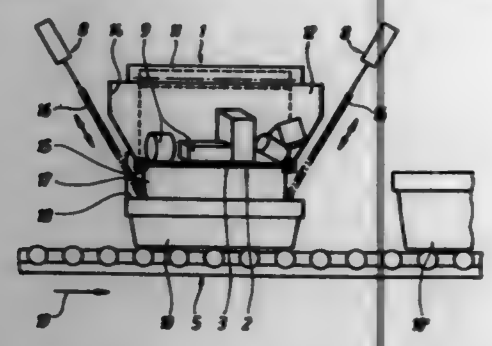

1. A loading device for loading containers of different heights with pieces of different dimensions, which comprises
(a) a conveyor carrying the containers and moving in a conveying direction,
(b) a vertically fixed funnel arranged above the conveyor, the funnel having
(1) sloping side walls extending substantially perpendicularly to the conveying direction and
(2) a discharge aperture between the side walls, and
(3) the conveyor moving respective ones of the containers into alignment with the discharge aperture,
(c) a shutter arranged selectively to cover the discharge aperture to hold the pieces in the funnel and to be retracted therefrom to permit the pieces to fall through the discharge aperture into the respective containers aligned with the discharge aperture of the funnel, and
(d) slides arranged adjacent the sloping side walls ahead and behind the funnel, viewed in the conveying direction, the slides extending substantially parallel to the sloping side walls of the funnel and having means for reciprocating said slides in a direction substantially parallel to the sloping side walls for positioning said slides closer to the upper rims of the containers.

5,701,720
OPTICAL EFFECT MATERIAL AND METHODS
Donald E. Weder, Highland, Ill., assignor to Southpac Trust International, Inc.
Continuation of Ser. No. 179,057, Jan. 7, 1994, Pat. No. 5,576,089, which is a continuation-in-part of Ser. No. 968,798, Oct. 30, 1992, Pat. No. 5,369,934, which is a continuation of Ser. No. 865,563, Apr. 9, 1992, Pat. No. 5,245,814, which is a continuation of Ser. No. 649,379, Jan. 31, 1991, Pat. No. 5,111,638, which is a continuation of Ser. No. 249,761, Sep. 26, 1988, abandoned, which is a continuation-in-part of Ser. No. 219,083, Jul. 13, 1988, Pat. No. 4,897,031, which is a continuation of Ser. No. 4,275, Jan. 5, 1987, Pat. No. 4,773,182, which is a continuation of Ser. No. 613,080, May 22, 1984, abandoned. This application May 30, 1995, Ser. No. 454,474
Int. Cl.⁶ B65B *11/02;11/48;11/56;25/02*
U.S. Cl. 53—397 **15 Claims**

1. A method of decoratively wrapping a floral grouping, comprising the steps of:
providing an iridescent wrapping material comprising:
an iridescent sheet of material having an upper surface and an opposing lower surface wherein each of the upper and lower surfaces provide an iridescent optical effect; and
a transparent sheet of material laminated to at least one of the upper and lower surfaces of the iridescent sheet of material

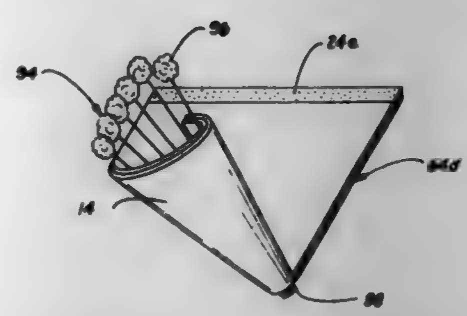

such that the iridescent optical effect of each of the upper and lower surfaces of the iridescent sheet of material is visible; and
wrapping the iridescent wrapping material about the floral grouping so as to encompass at least a portion of the floral grouping and thereby provide a decorative wrapping about the floral grouping wherein the decorative wrapping provides an iridescent optical effect.

5,701,721
SHIPPING CARTON AND METHOD FOR SHIPPING FLORAL GROUPINGS
Donald E. Weder, Highland, Ill., and Sue Corbett, Edmond, Okla., assignors to Southpac Trust International, Inc.
Continuation of Ser. No. 375,451, Jan. 19, 1995, which is a continuation of Ser. No. 216,749, Mar. 23, 1994, Pat. No. 5,407,072, which is a continuation-in-part of Ser. No. 93,109, Jul. 16, 1993, Pat. No. 5,311,992, which is a continuation-in-part of Ser. No. 892,441, Jun. 2, 1992, Pat. No. 5,240,109, which is a continuation of Ser. No. 831,767, Feb. 5, 1992, Pat. No. 5,148,918, which is a continuation-in-part of Ser. No. 692,329, Apr. 26, 1991, Pat. No. 5,092,465. This application Jun. 5, 1995, Ser. No. 463,800
Int. Cl.⁶ B65B *5/00;5/10*
U.S. Cl. 53—397 **11 Claims**

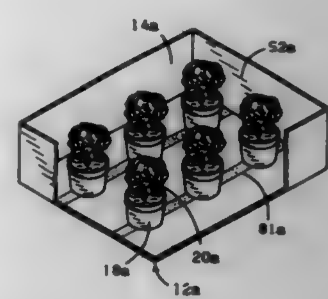

1. A method for securing floral groupings for shipment, comprising the steps of:
providing a base comprising an upper surface and a bonding material, the bonding material disposed on at least a portion of the upper surface of the base;
providing at least one floral container having an open upper end, a lower end and a retaining space sized to receive and retain a floral grouping therein, the floral grouping being disposed therein; and
disposing the floral container upon the upper surface of the base such that the lower end of the floral container engages the bonding material disposed on the upper surface of the base, the bonding material bondingly connecting the floral container to the base and serving as substantially the only means for securing the floral container and wherein the floral container is free from support by any other floral container secured to the base.

5,701,722
APPARATUS AND METHOD FOR PALLETIZING AND WRAPPING A LOAD
Joseph F. Franklin, and Owen N. Reese, II, both of Montgomery, Ala., assignors to HK Systems, Inc., New Berlin, Wis.
Continuation of Ser. No. 588,774, Jan. 19, 1996, Pat. No. 5,623,808. This application Jan. 16, 1997, Ser. No. 784,908
Int. Cl.⁶ B65B *13/10;35/50;53/00*
U.S. Cl. 53—399 **19 Claims**

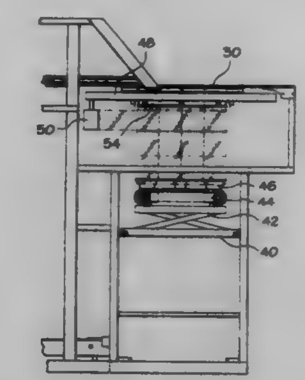

13. A method for palletizing and wrapping a load containing a number of bundles, said method comprising the steps of:
feeding a plurality of said bundles onto a conveyor;
arranging said bundles into a load layer on said conveyor by way of positioning structure associated with said conveyor;
transferring said load layer onto a stripper plate associated with said conveyor;
raising a pallet with a hoist located beneath said stripper plate;
raising said pallet above said hoist to said stripper plate by way of a scissor lift mounted on said hoist;
dropping said load layer from said stripper plate to said pallet;
dispensing a wrapping material about the perimeter of said load layer; and
lowering said pallet.

5,701,723
HAY RECOMPRESSION AND NETTING MACHINE
Bret A. Simpson, 1903 Regal Pl., Ellensburg, Wash. 98926
Continuation of Ser. No. 391,157, Feb. 21, 1995, Pat. No. 5,570,565, which is a continuation of Ser. No. 30,676, Mar. 12, 1993, Pat. No. 5,392,591. This application Jun. 24, 1996, Ser. No. 668,535
Int. Cl.⁶ B65B *25/02;1/24;9/15;9/14*
U.S. Cl. 53—435 **36 Claims**

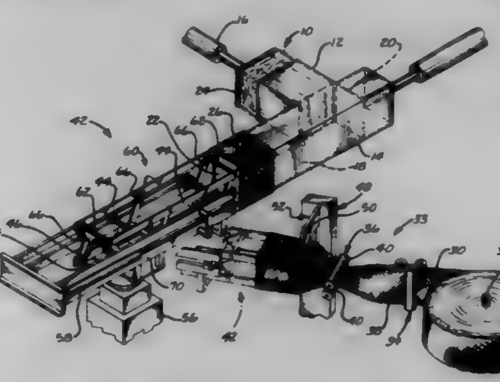

1. An apparatus for inserting at least one bale of material into a tubular material, having two opposing open ends comprising:
a. a holding chamber having an input end and an outlet; a line extending between the input end and the outlet defining a holding chamber axis;
b. means for positioning the tubular material having two opposing open ends around the holding chamber so that a portion of one of the open ends of the tubular material extends outwardly past an end of the outlet of the holding chamber; and
c. means for advancing said bale through the outlet of the holding chamber so that an end of said bale exiting the outlet expands and contacts the portion of the tubular material that extends outwardly past the end of the outlet and pulls the tubular material off the holding chamber onto said bale as the bale is advanced out of the outlet, thereby containing the bale within the tubular material.

5,701,724
METHOD AND APPARATUS FOR FORMING AND HERMETICALLY SEALING SLICES OF FOOD ITEMS
Vincent A. Meli, Green Bay; Michael A. Matharani, DePere; Ted A. Brzezinski, Green Bay; David L. Shaft, Green Bay, and James L. Urmanski, Green Bay, all of Wis., assignors to Schreiber Fodds, Inc., Green Bay, Wis.
Continuation of Ser. No. 98,752, Jul. 28, 1993, Pat. No. 5,440,860, which is a continuation of Ser. No. 791,490, Nov. 12, 1991, abandoned, which is a continuation-in-part of Ser. No. 644,481, Jan. 18, 1991, Pat. No. 5,114,307, which is a continuation of Ser. No. 361,405, Jun. 5, 1989, abandoned. This application Jun. 7, 1995, Ser. No. 482,862
Int. Cl.⁶ B65B *7/02;9/06;51/10*
U.S. Cl. 53—451 **26 Claims**

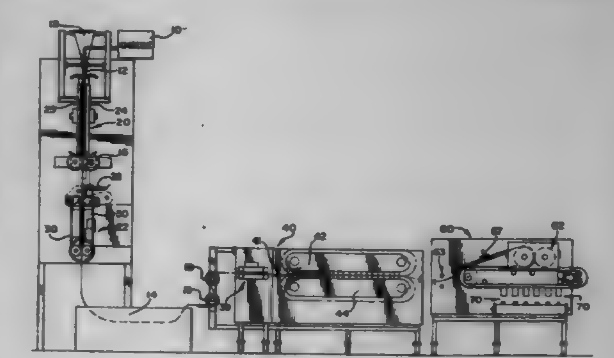

1. A process for automatically and continuously packaging a food item into hermetically sealed individual slices, comprising the steps of:
providing a continuous web of heat-sealable plastic material extending lengthwise, the web having front and rear sheets, a web width defined by the distance the web extends transverse to the web length, and two edges extending along the web length that can be sealed together;
folding the web about the web length;
moving the web in a forward direction;
sealing the edges of the web to form a longitudinal hermetic seal, thereby defining a continuous tubular web;
inserting the food item into the tubular web;
flattening the web after the food item is inserted to form a continuous slice of the flattened food item disposed between the front and rear sheets of the web;
urging the front and rear sheets of the web together at predetermined intervals along the flattened web to define a plurality of cross-sealing zones, and applying sufficient pressure at the cross-sealing zones to remove substantially all of the food item from between the front and rear sheets;
forming a plurality of hermetically sealed cross-seals at the cross-sealing zones by heating the web at the cross-sealing zones for a period of time and at a temperature sufficient to hermetically seal the front and rear sheets of the web together at the cross-sealing zones, the cross-seals each extending continuously along the web width to form, together with the longitudinal hermetic seals, hermetically sealed packages entirely enclosing the individual slices of the food item; and
cooling the web after the web is flattened and before the cross-seals are formed.

5,701,725

METHOD AND MACHINE FOR PRODUCING WRAPPINGS FOR PRODUCTS

Armando Neri, Bologna, and Mario Turra, Casalecchio di Reno, both of Italy, assignors to G.D Societa' Per Azioni, Bologna, Italy

Filed Jul. 31, 1996, Ser. No. 688,767

Claims priority, application Italy, Aug. 1, 1995, BO95A0391

Int. Cl.⁶ B65B *11/40;19/22;51/10;* **B23K** *26/00*

U.S. Cl. 53—466 **38 Claims**

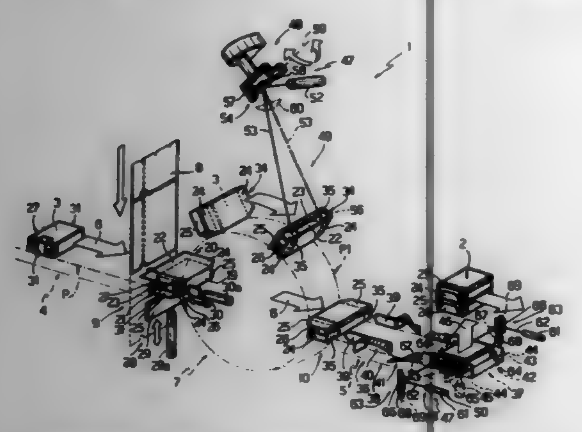

1. A wrapping method for producing wrappings (2) for products (3), the method comprising the steps of folding a sheet (8) of wrapping material about a respective product (3), so that at least a first (20) and a second (21) portion of said sheet (8) of wrapping material are superimposed one on top of the other with the first portion (20) outside the second (21); and connecting said two portions (20, 21) to each other by sealing; the method being characterized in that said connecting step comprises the further steps of compressing said two portions (20, 21) onto each other, and sweeping at least one laser beam (53, 62; 53, 80) along a sealing portion (56, 65) of said first portion (20).

5,701,726

PACKAGING APPARATUS FOR NON-ROUND CONTAINERS

Brenton L. Smith, Alexandria, Minn., assignor to Brenton Engineering Co., Alexandria, Minn.

Filed Jan. 24, 1997, Ser. No. 787,315

Int. Cl.⁶ B65B *35/56*

U.S. Cl. 53—544 **7 Claims**

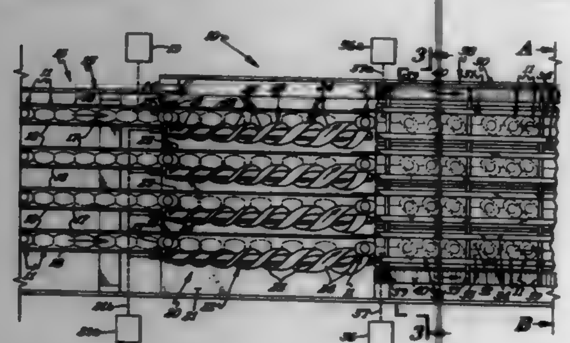

1. A continuous packaging apparatus for continuously conveying, turning and loading non-round bottles into cartons, comprising,

an infeed conveyor for conveying non-round bottles in an original angular upright position,

a spacing conveyor positioned immediately downstream of said infeed conveyor for sequentially receiving bottles from the infeed conveyor, and being operable to continue movement of the bottles in the original angular position in a downstream direction while spacing each bottle a predetermined distance from each adjacent bottle,

a turning conveyor disposed downstream of the spacing conveyors, for receiving bottles from the spacing conveyor in the spaced original angular position, being operable to turn each bottle from its original angular position to an intermediate angular position while continuing movement of the bottles in a downstream direction,

a bottle grouping device including a plurality of spaced abutment members extending transversely of the turning conveyor, means connecting and moving the abutment members in a downstream direction at a velocity less than the velocity of the turning conveyor, said grouping device cooperating with the turning conveyor to first group a predetermined number of bottles in shingled engaging relation while the shingled bottles remain in the intermediate angular position, the turning conveyor then further turning each group of bottles from the shingled intermediate angular position to an angular loading position,

and loading means located adjacent the downstream end position of the turning conveyor for successively receiving, engaging and moving each group of bottles laterally into a carton as each group of bottles is moved in a downstream direction.

5,701,727

CARD AFFIXING AND FORM FOLDING SYSTEM

Robert W. Lundstrom, Plymouth; Roger D. McCumber, Minnetonka, and Benjamin H. Sannel, Minneapolis, all of Minn., assignors to Datacard Corporation, Minneapolis, Minn.

Filed Jan. 13, 1995, Ser. No. 372,298

Int. Cl.⁶ B41F *13/54;* **B65H** *39/02;* **B65B** *61/00*

U.S. Cl. 53—569 **18 Claims**

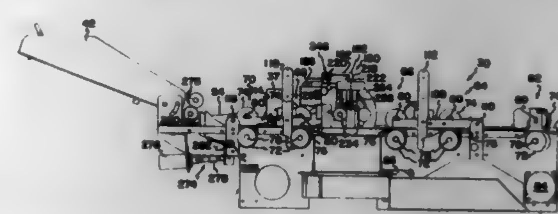

1. A system for mailing a form with a personalized card attached thereto, the system comprising:

a) a printer module for printing text on the form;

b) a card affixing module for receiving the form from the printer module, the card affixing module being constructed and arranged to provide relative movement between the card and the form in at least two dimensions such that the card can be affixed at any location on the form;

c) a sticker module for supplying the card affixing module with the card, the card having an affixing means attached thereto; and

d) a folding module for receiving the form from the affixing module, the folding module being constructed and arranged to fold the form with the card remaining attached, the folding module including:

a form guide structure having at least one edge;

a form transfer mechanism for feeding the form past the edge;

a first roller unit having a first roller aligned adjacent to a second roller, the first and second rollers being aligned substantially parallel to the edge, the first and second rollers defining a folding nip located between the first and second rollers;

a roller translating mechanism for translating the first roller unit between a first position in which the roller unit is distally located from the edge and a second position in which the folding nip of the roller unit is substantially aligned with the edge, the first roller passing in close proximity to the edge as the roller unit is moved between the first and second positions such that the form is pinched between the first roller and the edge to generate a pre-fold line on the form; and

a roller rotating mechanism for rotating the first and second rollers when the roller unit is in the second position, wherein a fold is created at the pre-fold line by feeding the pre-fold line into the folding nip of the rotating first and second rollers.

5,701,728

LAWN MOWER WITH LINE TRIMMER ASSEMBLY

George Koka, 7858 Lake Dr., Fair Haven, Mich. 48001, and Randy Reed, P.O. Box 230292, Fair Haven, Mich. 48023

Filed Sep. 8, 1995, Ser. No. 525,307

Int. Cl.⁶ A01D *55/18*

U.S. Cl. 56—12.7 **13 Claims**

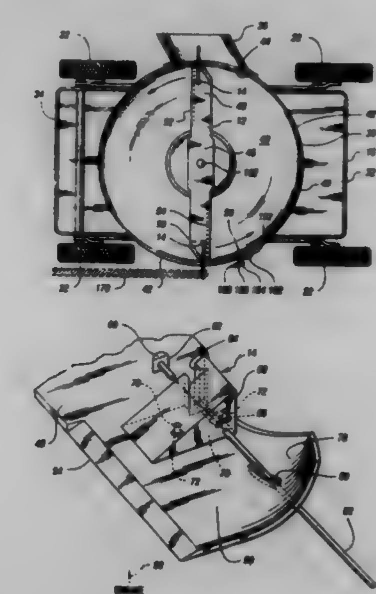

1. A lawn mower for cutting vegetation, the lawn mower comprising:

a housing including a top wall portion and a generally vertically extending side wall portion;

wheels attached to the housing to allow the lawn mower to roll over a surface to be mowed;

a power source mounted on the housing which rotatably drives a shaft extending through the housing and coaxial with a longitudinal drive axis;

an elongate blade attached to rotate with the shaft and having a central portion and a pair of end portions, at least one of the end portions having a cutting edge thereon for cutting vegetation disposed inside of the housing to a first length upon rotation of the blade; and

at least one line trimmer assembly attached to the blade, the line trimmer assembly including a filament line which extends radially beyond the side wall portion to cut vegetation disposed outside of the housing to a second length upon rotation of the blade, said second length being greater than said first length.

5,701,729

SYSTEM FOR FORMING ELASTOMERIC CORE/STAPLE FIBER WRAP YARN USING A SPINNING MACHINE

John Joseph M. Rees, Signal Mountain, Tenn., and Leonard L. Hixon, Jr., Dalton, Ga., assignors to Dixie Yarns, Inc., Chattanooga, Tenn.

Continuation-in-part of Ser. No. 470,209, Jun. 6, 1995. This application Jun. 3, 1996, Ser. No. 657,182

Int. Cl.⁶ D02G *3/36*

U.S. Cl. 57—3 **12 Claims**

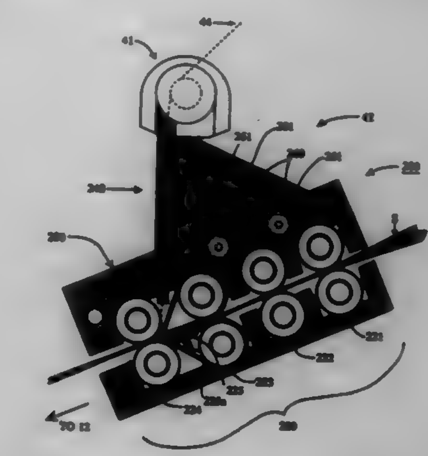

1. A system for forming elastomeric core/wrap yarn using a spinning machine including a drafting zone for drafting sliver and a spinning zone for spinning the drafted sliver around the elastomeric core to form the elastomeric core/wrap yarn, said system comprising:

threading means for feeding elastomeric yarn to the drafting zone of the spinning machine;

feed means for providing a controlled supply of elastomeric yarn to said threading means; and

elastomeric yarn sensing means for detecting an elastomeric yarn passing through said threading means;

wherein the elastomeric yarn and sliver fed through the drafting zone are combined in the spinning zone to form an elastomeric core/wrap yarn.

5,701,730

INCANDESCENT MANTLES

Brian Steven Kennedy, Manchester, and Peter Hayhurst, Bury, both of England, assignors to TBA Industrial Products Limited, Manchester, England

Continuation-in-part of Ser. No. 117,194, Sep. 13, 1993, abandoned. This application Mar. 25, 1996, Ser. No. 621,470

Claims priority, application United Kingdom, Mar. 14, 1991, 9105396

Int. Cl.⁶ D02G *3/02;3/06*

U.S. Cl. 57—224 **7 Claims**

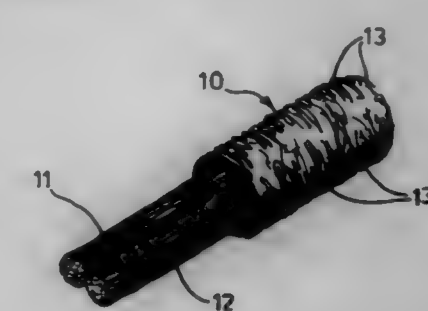

1. A mantle tie cord comprising a continuous multifilament first core of refractory fiber, a second core of another continuous multifilament yarn and an outer sheath of staple fibers wrapped

about said first and second cores, wherein the periphery of said first core is adjacent to the periphery of said second core.

5,701,731

METHOD OF SERVICING GENERATOR IN COMBINED CYCLE POWER PLANT

Ernst Brem, Schlieren, Switzerland; Roland Ulrich, Tiengen, Germany, and Peter Werner Stadelmann, Thalwil, Switzerland, assignors to ABB Management AG, Baden, Switzerland

Division of Ser. No. 510,507, Aug. 2, 1995, Pat. No. 5,609,018. This application Mar. 7, 1997, Ser. No. 812,593

Claims priority, application Switzerland, Aug. 19, 1994, 2554/94

Int. Cl.[6] F02C *6/18;7/20*

U.S. Cl. 60—39.02 **2 Claims**

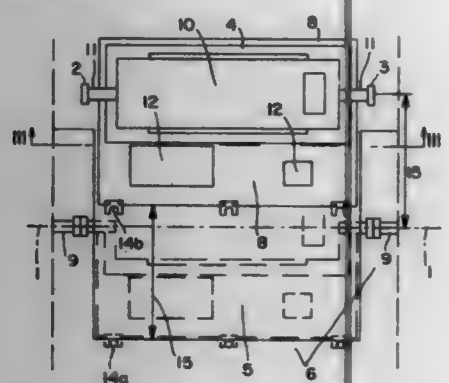

1. A method for displacing the generator of an installation with common shafting having a gas turbine, a steam turbine and a generator between the gas turbine and the steam turbine, the installation having a slab supporting the generator, including the steps of:

(a) decoupling the generator from the common shafting; and

(b) sliding the slab laterally to allow the rotor of the generator to be removed from the generator.

5,701,732

METHOD AND APPARATUS FOR PURGING OF GAS TURBINE INJECTORS

Gregory S. Nesbitt, Norwalk, and Robert D. Shoemaker, West Des Moines, both of Iowa, assignors to Delavan Inc., West Des Moines, Iowa

Filed Jan. 24, 1995, Ser. No. 378,025

Int. Cl.[6] F02G *3/00*

U.S. Cl. 60—39.06 **34 Claims**

1. A fuel injector for the combustor of a gas turbine, comprising:

a fuel element having first and second fuel passages, said first and second fuel passage each having a discharge orifice adjacent an end of the element, and an inlet at a location spaced from said end for receiving fuel from a fuel supply source;

an air passage in said element communicating with said first fuel passage to communicate high pressure air to said first passage to purge the residual fuel from said first and second fuel passages through the discharge orifice of said second fuel passage when the supply of fuel to said first and second fuel passages is interrupted;

said fuel element having a longitudinal axis; and

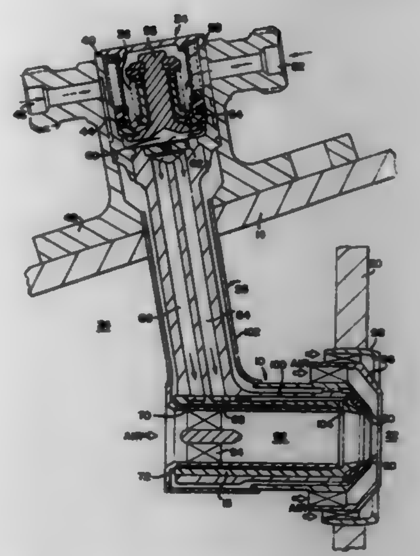

said discharge orifices of said first and second fuel passages are spaced from said longitudinal axis by substantially the same distance for each.

5,701,733

DOUBLE RABBET COMBUSTOR MOUNT

Eric A. Lewis, Chestnut Hill, and Robert H. Slater, Beverly, both of Mass., assignors to General Electric Company, Cincinnati, Ohio

Filed Dec. 22, 1995, Ser. No. 577,070

Int. Cl.[6] F03B *1/04*

U.S. Cl. 60—39.31 **10 Claims**

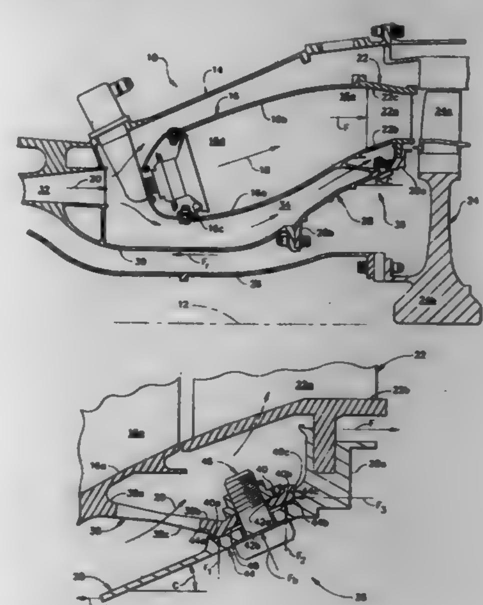

1. A combustor mount comprising:

an annular combustor having radially inner and outer liners joined together at one end to a dome and defining therebetween a combustion chamber for producing combustion gas, said liners defining an outlet at opposite ends thereof for discharging said combustion gas;

a turbine nozzle disposed adjacent to said combustor outlet for receiving said combustion gas;

a conical nozzle support having an aft flange at one end fixedly joined to said nozzle, and a smaller diameter forward flange at an opposite end, said nozzle support being disposed coaxially with and spaced from said inner liner to define an annular flowpath for channeling compressor discharge air to said nozzle;

said inner liner having an integral annular mounting arm extending to said nozzle support, with said arm having a conical mounting flange at a distal end thereof, said mounting flange including first and second axially spaced apart radial lands and a plurality of circumferentially spaced apart outer holes therebetween;

said nozzle support having a conical seat for receiving said mounting flange, with said seat including first and second axially spaced apart radial rabbets and a plurality of circumferentially spaced apart inner holes therebetween, with said first and second lands being disposed on respective ones of said first and second rabbets, and with said outer and inner holes being aligned; and

a plurality of fasteners extending through respective pairs of said aligned outer and inner holes for clamping together said mounting flange to said seat to mount said combustor to said nozzle support.

5,701,734

Patent Not Issued For This Number

5,701,735

METHOD FOR REGENERATING A PARTICULATE COLLECTION FILTER AND AN EXHAUST EMISSION CONTROL SYSTEM WITH A PARTICULATE COLLECTION FILTER

Akio Kawaguchi, Susono, Japan, assignor to Toyota Jidosha Kabushiki Kaisha, Aichi, Japan

Filed Jul. 26, 1995, Ser. No. 507,209

Claims priority, application Japan, Aug. 8, 1994, 6-185776

Int. Cl.[6] F01N *3/02;3/28*

U.S. Cl. 60—274 **12 Claims**

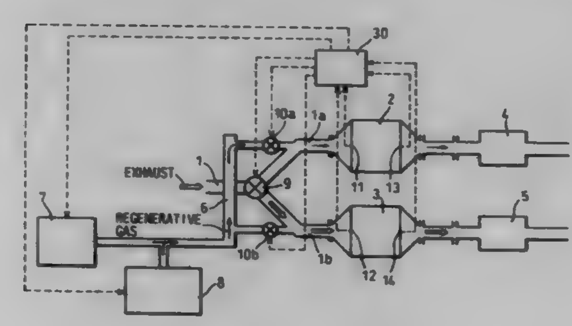

1. A method for regenerating a particulate collection filter by the use of a regenerative gas comprising:

a step for causing particulate combustion in only the downstream part of said filter in the flow of said regenerative gas; and

a step for causing said particulate combustion in the downstream part of said filter to propagate toward the upstream part of said filter in the flow of said regenerative gas, wherein said flow of said regenerative gas is in a direction from said upstream part of said filter towards said downstream part of said filter.

5,701,736

APPARATUS FOR PURIFYING EXHAUST GAS

Shingo Morishima, Nukata-gun; Jun Yamada, Okazaki; Kenji Kanehara, Toyohashi, and Tohru Yoshinaga, Okazaki, all of Japan, assignors to Nippon Soken, Inc., Nishio, Japan

Filed Dec. 18, 1995, Ser. No. 574,044

Claims priority, application Japan, Dec. 19, 1994, 6-334424; Jan. 9, 1995, 7-017526

Int. Cl.[6] F02M *5/06*

U.S. Cl. 60—297 **16 Claims**

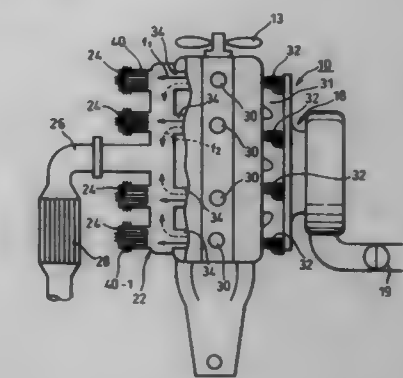

1. An apparatus for purifying an exhaust gas for an internal combustion engine including an engine body with an exhaust port and an exhaust passageway for receiving the exhaust gas from the exhaust port, the apparatus comprising:

means arranged at a location facing the exhaust port for adsorption of unburnt components in the exhaust gas from the exhaust port;

catalyst means arranged in the exhaust passageway at a location downstream from the adsorption means for purifying the unburnt components in the exhaust gas;

means for selectively cooling the adsorption means in response to a control signal; and means for controlling the cooling means by generating the control signal when a condition of the engine requires the cooling, of the adsorption means.

5,701,737

EXHAUST TREATMENT DEVICE FOR MOTOR VEHICLE

David P. Branik, Grosse Ile; Daniel A. Roulinson, Wyandotte, and Gerald L. Umin, New Boston, all of Mich., assignors to Ford Global Technologies, Inc., Dearborn, Mich.

Filed Apr. 1, 1996, Ser. No. 617,712

Int. Cl.[6] F01N *3/28;7/18*

U.S. Cl. 60—299 **16 Claims**

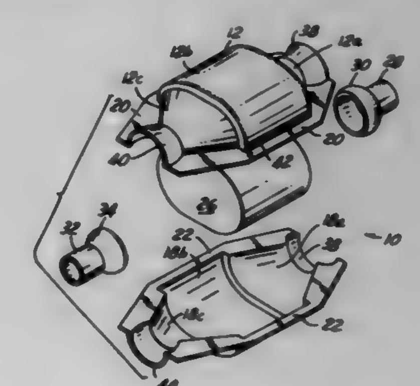

1. An exhaust treatment device for a motor vehicle, comprising:

an upper shell having an upper inlet section and an upper outlet section, with an upper central body section extending therebetween;

a lower shell having a lower inlet section and a lower outlet section, with a lower central body section extending therebetween, and with said upper shell being superimposed upon and mated with said lower shell, thereby defining an inlet flow path formed by the upper inlet section and the lower inlet section, an outlet flow path formed by the upper outlet section and the lower outlet section, and a treatment space formed by the upper central body section and the lower central body section and extending between the inlet flow path and the outlet flow path;
an exhaust treatment element housed in the treatment space;
an inlet stub for conducting exhaust gas into the inlet flow path;
an outlet stub for conducting exhaust gas from the outlet flow path;
an inlet connector section for connecting the inlet stub with the inlet flow path; and
an outlet connector section for connecting the exit stub with the outlet flow path, with at least one of said inlet or outlet connector sections comprising a generally hemispherical socket formed integrally from end portions of the upper shell and the lower shell in a location abutting at least one of said inlet flow path and said outlet flow path, with said generally hemispherically socket mating with a hollow spherical section incorporated in at least one of said inlet stub or said outlet stub.

5,701,738
MECHANICAL DISCONNECT FOR VARIABLE SPEED HYDROSTATIC TRANSMISSION
Frederick P. Eberle, and Norman E. Jolliff, both of Salem, Ind., assignors to Tecumseh Products Company, Tecumseh, Mich.
Filed Jul. 24, 1996, Ser. No. 685,683
Int. Cl.⁶ F16D *31/02;* **B60K** *41/22*
U.S. Cl. 60—435 **18 Claims**

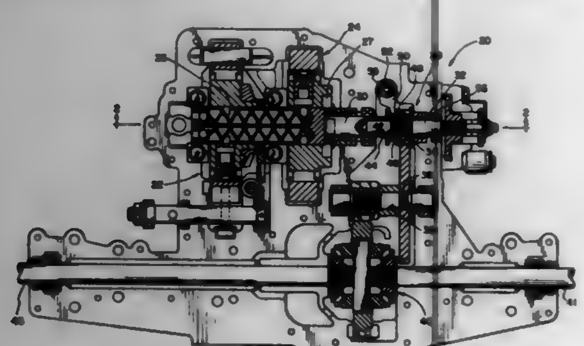

1. A hydrostatic transmission for use in lawn and garden implements, comprising:
a hydraulic unit including a pump, a motor, and a hydraulic passage communicating hydraulic fluid between said pump and said motor;
an output shaft coupled to said hydraulic unit, said output shaft having a drive portion and a driven portion, said driven portion being independent of said drive portion;
a shaft brake operably connected to said driven portion, which when engaged stops rotation of said driven portion; and
a selectively engageable disconnection mechanism adjacent said output shaft, said disconnection mechanism connecting said drive portion to said driven portion when engaged, and disconnecting said drive portion from said driven portion when disengaged, said driven portion being rotatable without resistance from said hydraulic unit when said disconnection mechanism is disengaged.

5,701,739
AXLE DRIVE UNIT
Ryota Ohashi; Hideaki Okada, and Toshio Nagai, all of Amagasaki, Japan, assignors to Kanzaki Kokyukoki Mfg. Co., Amagasaki, Japan
Filed Aug. 11, 1995, Ser. No. 514,089
Claims priority, application Japan, Aug. 11, 1994, 6-189341
Int. Cl.⁶ F16D *31/02;39/00*
U.S. Cl. 60—453 **24 Claims**

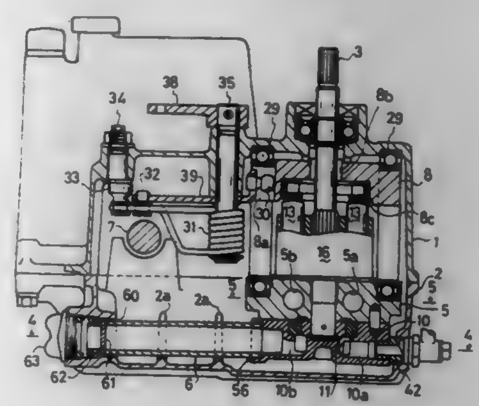

1. An axle drive unit comprising:
a housing;
an oil sump formed in said housing;
a hydrostatic transmission for driving an axle, said hydrostatic transmission being disposed in said housing;
oil supply means for supplying operating oil to said transmission, said oil supply means having a suction port into which oil in said oil sump is introduced;
an oil filter disposed in said oil sump for filtering said oil in said oil sump;
a plug-in bore open at the surface of said housing for receiving said oil filter; and
a cover member for covering said plug-in bore and being detachably mounted to said housing, wherein said oil falter is inserted into said housing; through said plug-in bore and is connected with said suction port.

5,701,740
DEVICE FOR A BUOY-BASED WAVE POWER APPARATUS
Torger Tveter, N-2100 Skarnes, Norway
PCT No. PCT/NO93/00140, § 371 Date Apr. 7, 1995, § 102(e) Date Apr. 7, 1995, PCT Pub. No. WO94/09273, PCT Pub. Date Apr. 28, 1994
PCT Filed Sep. 23, 1993, Ser. No. 411,712
Claims priority, application Norway, Oct. 9, 1992, 923946
Int. Cl.⁶ F03B *13/12*
U.S. Cl. 60—505 **37 Claims**

1. A device for buoy-based power apparatus where a surface-related buoy coacts with a cylinder/piston arrangement which is connected to the sea bed, where said buoy is connected to the cylinder of said arrangement, and where a piston part of the arrangement is provided with means enabling fluid flow therethrough, said device upon the upward movement of the buoy being arranged to form a pressure chamber in that part of said cylinder which is adjacent the lower face of the piston and surrounds a piston rod of said piston, and simultaneously causing suction of fluid into that part of the cylinder which is adjacent the top face of the piston, said fluid being shifted from a suction part of said cylinder to a pressure side of the cylinder during downward movement of the buoy/cylinder, either the piston rod being connected with a bottom base member on the sea bed in an articulated or flexible manner, the piston rod having mounted thereon a submarine buoy having sufficient buoyancy to withstand the pressure and frictional forces acting on the piston and piston rod upon the

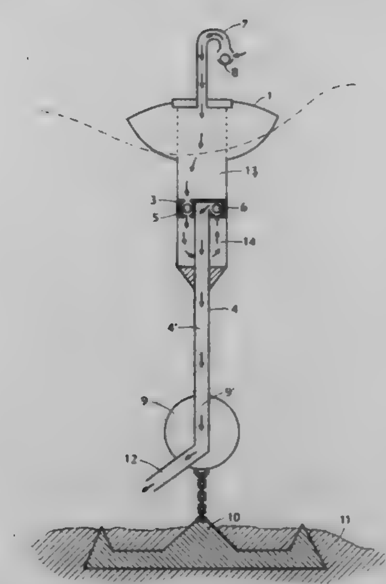

downward movement of the combination of the surface-related buoy and attached cylinder, or the lower end of the piston rod connecting with a sink weight member located in a bed means, the sink weight member having a heavier weight than the maximum buoyancy of the surface-related buoy, wherein the cylinder has an adjusted weight cast into the lower end and the piston rod is hollow to provide conduit for fluid or cable for converted energy out of the arrangement and to another installation.

5,701,741
TURBOCHARGERS FOR INTERNAL COMBUSTION ENGINES
Philip S. Halsall, Shevington, United Kingdom, assignor to AlliedSignal, Inc., Morristown, N.J.
PCT No. PCT/GB94/02482, § 371 Date Sep. 8, 1995, § 102(e) Date Sep. 8, 1995, PCT Pub. No. WO95/13462, PCT Pub. Date May 18, 1995
PCT Filed Nov. 11, 1994, Ser. No. 481,406
Claims priority, application United Kingdom, Nov. 11, 1993, 9323346
Int. Cl.⁶ F02B *37/12*
U.S. Cl. 60—602 **10 Claims**

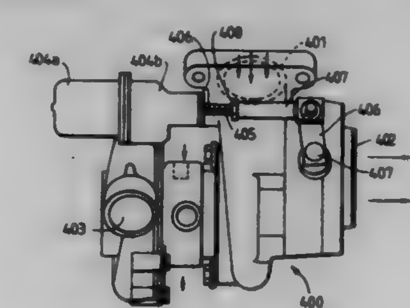

1. Turbocharger comprising a drive-shaft mounted in bearing means in a housing, the drive-shaft drivably connecting an exhaust gas driven turbine wheel to the impeller of a compressor, a gas flow control device positioned upstream of the turbine wheel and operable to adjust the operating performance of the turbocharger, and an electrically drivable actuator motor for regulating the operation of the gas flow control device via linkage means in response to an electrical signal dependent at least upon delivery pressure of the compressor, the linkage means comprising a male threaded lead screw having a multistart thread and a correspondingly female threaded screw member threadedly engaged therewith and one of said screw member and lead screw being arranged to move generally linearly, substantially parallel to an axis of the drive-shaft, on rotation of the other of said screw member and lead screw by the actuator motor, thereby converting said rotation into movement of the gas flow control device.

5,701,742
CONFIGURED INDIUM GASKET FOR THERMAL JOINT IN CRYOCOOLER
Phillip William Eckels, and Daniel C. Woods, both of Florence, S.C., assignors to General Electric Company, Milwaukee, Wis.
Filed Dec. 29, 1995, Ser. No. 581,099
Int. Cl.⁶ F25B *9/00*
U.S. Cl. 62—6 **20 Claims**

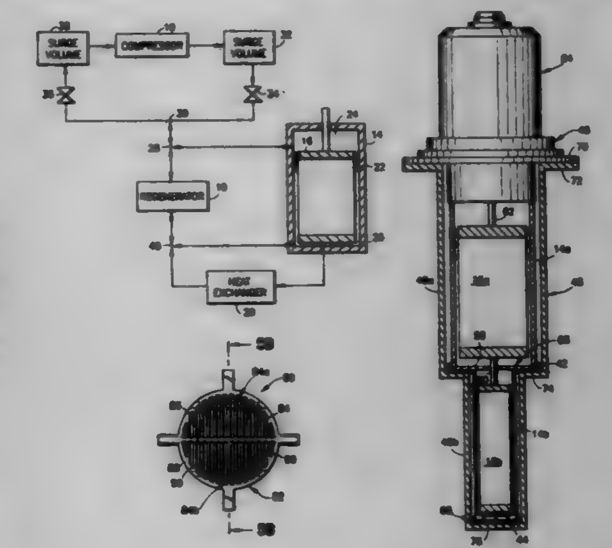

11. A thermal interface gasket comprising a generally planar grid structure made of a mechanically deformable, heat conducting material, said grid structure of said gasket comprising a plurality of beams.

5,701,743
PULSE TUBE REFRIGERATOR
Yasumasa Hagiwara, and Shinichi Yatsuzuka, both of Kariya, Japan, assignors to Advanced Mobile Telecommunication Technology Inc., Nisshin, Japan
Filed Sep. 26, 1996, Ser. No. 722,873
Claims priority, application Japan, Nov. 1, 1995, 7-285360
Int. Cl.⁶ F25B *9/00*
U.S. Cl. 62—6 **5 Claims**

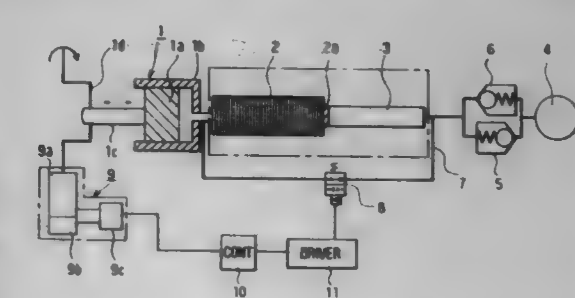

1. A pulse tube refrigerator comprising:
a regenerator having a first end and a second end, filled with working fluid therein, for exchanging heat between the working fluid and the regenerator;
a cool end portion connected to the second end of the regenerator for cooling an article to be cooled;

a pulse tube extending from the cool end portion to allow the working fluid to flow between the regenerator and the pulse tube;
a compressor connected to the first end of the regenerator for giving pressure and displacement to the working fluid in the regenerator;
a buffer tank connected to the pulse tube for reserving the working fluid displaced from the pulse tube; and
fluid displacement control valve means disposed between the pulse tube and the buffer tank for controlling fluid flow between the pulse tube and the buffer tank, said fluid displacement control valve means being arranged in a manner such that the fluid displacement control valve means is open to allow fluid communication between the pulse tube and the buffer tank when the pressure difference therebetween reaches a predetermined value and is closed otherwise, thereby the working fluid in the regenerator being compressed or expanded without being accompanied by displacement thereof when the fluid displacement control valve means is closed, and the working fluid in the regenerator being displaced without being accompanied by compression or expansion thereof when said means is open.

5,701,744
MAGNETIC RESONANCE IMAGER WITH HELIUM RECONDENSING
Phillip William Eckels, Florence, S.C.; Kazuhiko Sato, Ishikawa-machi, Japan; Daniel Christian Woods, Florence, S.C.; Granville Geer Ward, Florence, S.C.; Gregory Farin Hayworth, Florence, S.C., and Christopher G. King, Florence, S.C., assignors to General Electric company, Milwaukee, Wis.
Filed Oct. 31, 1996, Ser. No. 741,993
Int. Cl.^{6} F17C *5/02;* **H01F** *7/22;* **F25B** *19/00*
U.S. Cl. 62—47.1 **18 Claims**

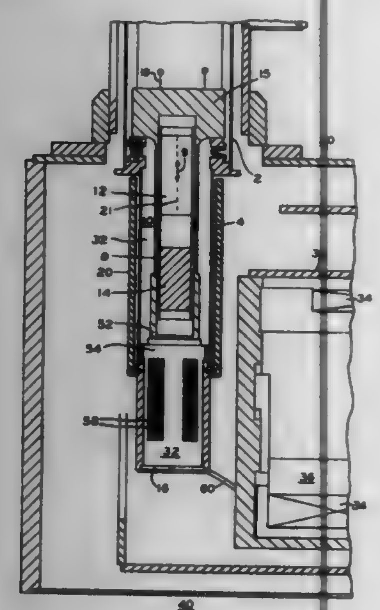

1. A cryogen recondensing system with a mechanical cryocooler utilizing a rare earth displacer for a magnetic resonance imager superconducting magnet comprising:
a sleeve surrounding said cryocooler rare earth displacer;
said sleeve being magnetically coupled to the magnetic fields generated by the movement of said rare earth displacer;
said sleeve including a lead alloy which provide superconducting flow of currents induced in said shield by said magnetic fields; and
high thermal conductivity members along the surface of said sleeve;
said superconducting current flow opposing said induced magnet fields to shield said superconducting magnet from said magnetic fields generated by said movement of said rare earth displacer; and
said cryocooler thermally connected to cryogen recondensing means.

5,701,745
CRYOGENIC COLD SHELF
Alan Tat Yan Cheng, Livingston, N.J., and Donald Leonard DeVack, Norwalk, Conn., assignors to Praxair Technology, Inc., Danbury, Conn.
Filed Dec. 16, 1996, Ser. No. 768,061
Int. Cl.^{6} F25B *19/00;* **F17C** *7/02*
U.S. Cl. 62—51.1 **10 Claims**

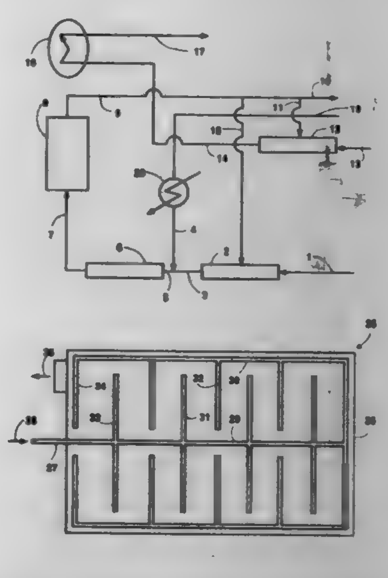

1. A cryogenic cold shelf comprising spaced panels defining a shelf volume, and a cryogen distributor within said shelf volume in flow communication with a source of cryogenic fluid and capable of having cryogenic fluid flow therethrough, said cryogen distributor comprising a main flow path having a first leg and a second leg downstream of the first leg, said first leg having a plurality of first branches extending from the first leg, and said second leg having a plurality of second branches extending from said second leg and oriented between said first branches.

5,701,746
METHOD TO REFRIGERATE A JACKET FOR KEEPING A TRANSPLANT COLD
Francois Desgrandchamps; Michel Eugene, both of Paris, France; Nico Girrens, Rodershausen; Fernand Muller, Ingeldorf, both of Luxembourg, and Sylvia Spaniol, Merzig, Germany, assignors to Electrolux S.A.R.L., Vianden, Luxembourg
PCT No. PCT/EP95/02427, § 371 Date Jul. 25, 1996, § 102(e) Date Jul. 25, 1996, PCT Pub. No. WO96/01603, PCT Pub. Date Jan. 25, 1996
PCT Filed Jun. 22, 1995, Ser. No. 624,518
Claims priority, application Sweden, Jul. 12, 1994, 9402458
Int. Cl.^{6} F25D *25/00*
U.S. Cl. 62—62 **2 Claims**

1. Method for refrigerating a jacket (10), said jacket being used to enclose and keep a transplant (46) cold while the transplant is surgically connected to a recipient, said jacket (10) having a wall with a cavity (22) containing a liquid and an opening (24) to the cavity, comprising the steps of placing the jacket in a compartment which is evacuated, evacuating the cavity through the opening and freezing the liquid.

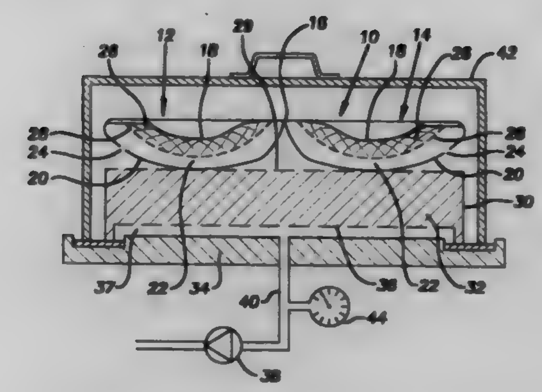

5,701,747
AUTOMATIC RAPID CHILLING SYSTEM
Norman A. Faiola, Ithaca, N.Y., and Christopher J. Crase, Monument, Colo., assignors to Syracuse University, Syracuse, N.Y.
Filed Oct. 31, 1996, Ser. No. 742,065
Int. Cl.^{6} A23G *9/12*
U.S. Cl. 68—63 **4 Claims**

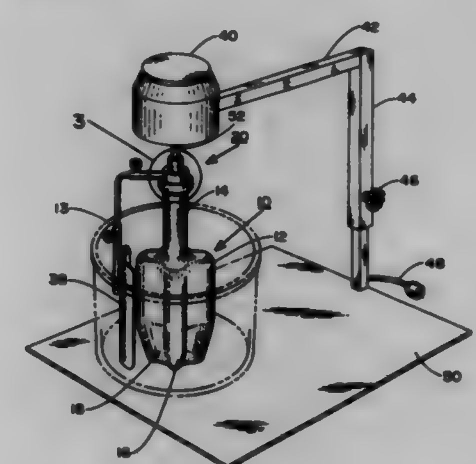

4. A method for automatically rapidly chilling liquids and semisolids which comprises:
(a) providing a frame which supports a motor which contains a drive shaft having a connecting member at its distal end;
(b) connecting a sealed hollow elongated chilling utensil containing a refrigerant to the connecting member of said drive shaft;
(c) immersing said chilling utensil into a food product to be cooled; and
(d) rotating said chilling utensil on said drive shaft for a time sufficient to rapidly cool said food product to a desired predetermined temperature.

5,701,748
EVAPORATIVE COOLER FOR AIR CONDITIONING CONDENSING UNIT
Jack LeRoy Phelps, and Bernard Maurice Paquette, both of P.O. Box 189, Cathedral City, Calif. 92235
Filed Jun. 6, 1996, Ser. No. 659,575
Int. Cl.^{6} F25D *17/06*
U.S. Cl. 62—91 **10 Claims**

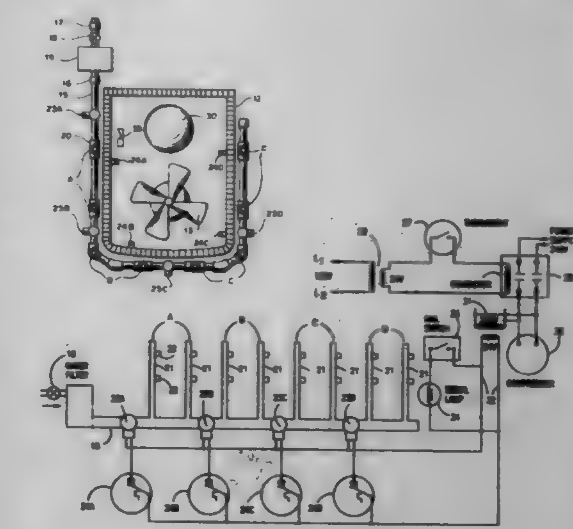

10. A method of increasing the efficiency of an outdoor air conditioning condensing unit having a wraparound condenser and a top mounted fan to draw ambient air through the condenser, said method comprising installing a tubular manifold encircling the condensing unit coextensive with the wraparound condenser, connecting said manifold to a source of water pressure, installing a plurality of spaced vertically extending pipes in fluid communication with said manifold along the length thereof, providing each vertically extending pipe with at least one spray nozzle, grouping said vertically extending pipes into a number of spray stages comprising at least one vertical pipe, providing an electrically controlled valve in said manifold at the inlet of each spray stage, providing a plurality of thermal switches arranged around the condenser internally of the condensing unit, each switch being set out at a different operating temperature, connecting said switches in circuit with individual electrically controlled valves whereby a modulated spray pattern is directed toward the condenser depending upon the settings of said switches.

5,701,749
WATER COLLECTION AND DISPENSING MACHINE
John M. Zakryk, 5961 S.W. 19th Street, Plantation, Fla. 33317
Filed Apr. 30, 1996, Ser. No. 641,186
Int. Cl.^{6} F25D *17/06;21/14;* **B67D** *5/62*
U.S. Cl. 62—93 **13 Claims**

1. A water collection and dispensing machine comprising:
a primary housing, said primary housing including an air inlet and an air outlet,
said air outlet being disposed at generally a bottom of said housing,
an air blower structured to draw air into said primary housing through said air inlet and thereby create a positive pressure within said primary housing which pushes air down and out of said primary housing through said air outlet in a relatively quiet fashion,
dehumidifier refrigerant means structured and disposed to convert a refrigerant gas into a cold refrigerant liquid,
a fin and tube evaporator coil structured to cycle said cold refrigerant liquid therethrough, said fin and tube evaporator coil being disposed such that the air drawn into said primary housing through said air inlet passes over said fin and tube

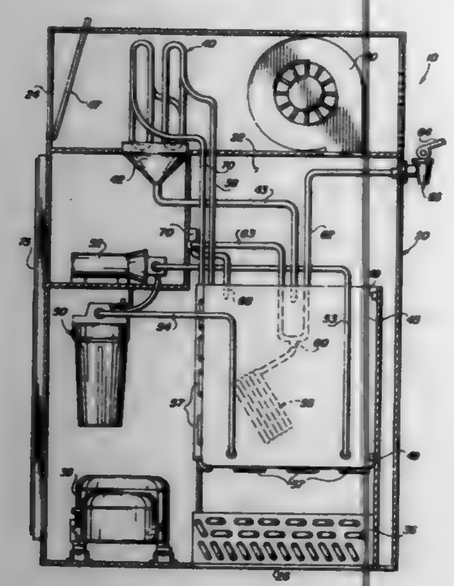

evaporator coil and moisture therefrom condenses on an exterior of said fin and tube evaporator coil,
said fin and tube evaporator coil being structured to include a substantially large surface area without taking up a substantial amount of space within said housing
fluid collection means structured to collect said moisture, in the form of water droplets, from said fin and tube evaporator coil, filtration means structured and disposed to filter water collected by said fluid collection means prior to dispensing,
said fluid collection means including a fluid reservoir, and
a plurality of thermal electric cold plates lining said fluid reservoir and structured and disposed to maintain the water within said fluid reservoir cold.

5,701,750
ZONE DEMAND CONTROLLED DUAL HEAT PUMP SYSTEM AND CONTROLLER THEREFOR
Robert W. Ray, 5801 Lumberdale Rd., #207, Houston, Tex. 77092
Filed Jun. 26, 1995, Ser. No. 494,688
Int. Cl.[6] F25B *13/00*
U.S. Cl. 62—160 **14 Claims**

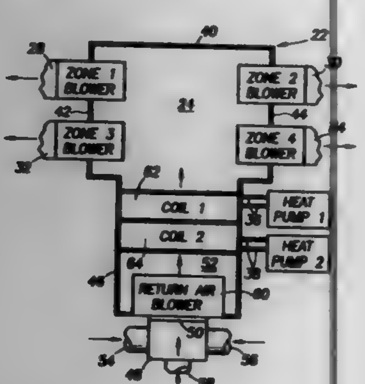

1. A thermal zone demand controlled dual cascade arranged heat pump system and system controller for heating and cooling the air of building spaces having a plurality of thermal zones, comprising:
(a) an air circulation system for circulating air to and from said thermal zones and having a conditioned air chamber and a plurality of air supply conduits each for connection in air supplying relation with a respective one of said thermal zones of said building space;
(b) first and second heat pumps being located externally of said building space and having first and second heat exchange refrigerant coils located in series within said air circulation system therein being connected in refrigerant circulating relation respectively with said first and second heat pumps and selectively heating and cooling air flowing to said conditioned air chamber;
(c) a plurality of thermal zone blowers being connected in said air circulation system and in air supplying relation with respective air supply conduits for conducting conditioned air from said conditioned air chamber through respective air supply conduits to respective thermal zones of said building space; and
(d) electronic controller circuitry being coupled for thermal demand control of said first and second heat pumps and said plurality of thermal zone blowers for operation of said first heat pump to accommodate a predetermined range of thermal load and for operation of said second heat pump to accommodate a range of thermal load in excess of said predetermined range of thermal load and for selective operation of said plurality of thermal zone blowers and when operating for selective operation of said thermal zone blowers at low blower speed and high blower speed responsive to sensed conditions of thermal load.

5,701,751
APPARATUS AND METHOD FOR ACTIVELY COOLING INSTRUMENTATION IN A HIGH TEMPERATURE ENVIRONMENT
Aaron G. Flores, Sugar Land, Tex., assignor to Schlumberger Technology Corporation, Houston, Tex.
Filed May 10, 1996, Ser. No. 646,675
Int. Cl.[6] F25B *19/00*
U.S. Cl. 62—169 **16 Claims**

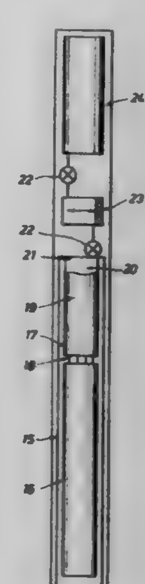

1. An apparatus for actively cooling instrumentation contained in a logging tool comprising:
a) a first container having a cooling agent therein, said container being located adjacent said instrumentation;
b) a heat exchanger in thermal communication with said first container and said instrumentation for transferring heat from said instrumentation to said cooling agent in said container;
c) a second container for receiving the heated, cooling agent; and
d) a compressor in fluid communication with said first container for extracting said heated, cooling agent from said first container and compressing said heated, cooling agent, said compressor further in fluid communication with said second container for transferring said compressed, heated cooling agent to said second container.

5,701,752
VEHICULAR AIR TEMPERATURE CONTROL SYSTEM HAVING EXCELLENT WINDSHIELD DEFOGGING CHARACTERISTICS
Masaru Tsunokawa, Okazaki; Yukikatsu Ozaki, Nishio; Sadahisa Onimaru, Chiryu, and Takahisa Suzuki, Kariya, all of Japan, assignors to Denso Corporation, Kariya, and Nippon-soken, Inc., Nishio, both of Japan
Filed Oct. 25, 1996, Ser. No. 736,986
Claims priority, application Japan, Oct. 26, 1995, 7-279128
Int. Cl.[6] B60S *1/54*
U.S. Cl. 62—183 **12 Claims**

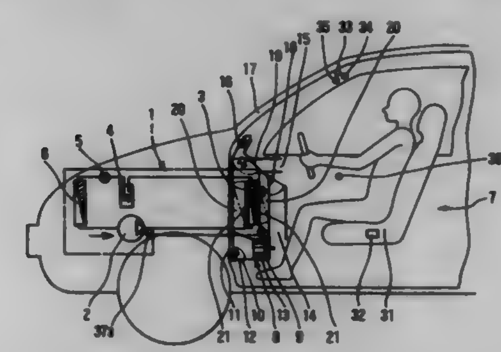

1. A vehicular air temperature control system for heating a passenger compartment of a vehicle by blowing air from a plurality of air outlets that includes a defogging air outlet for blowing air towards a windshield of said vehicle, said control system comprising:
a case which defines an air passage for guiding air towards said plurality of air outlets;
a heat pump cycle which includes a condenser, said condenser being disposed in said case for heating said air in said air passage;
physical value detection means for detecting a physical value indicative of surface temperature of said windshield of said vehicle;
a blower, which is coupled to said case, for blowing air towards said air passage of said case;
condenser contact switching means, which is disposed in said case, for selectively allowing and preventing contact of said outside air passing through said air passage with said condenser, said condenser contact switching means being for preventing said contact of said outside air with said condenser when said physical value detected by said physical value detection means is lower than a predetermined value; and
air outlet switching means coupled to said case for opening and closing said plurality of air outlets, said air outlet switching means being for opening said defogging air outlet when said physical value detected by said physical value detection means is lower than a predetermined value to direct said outside air towards an inner surface of said windshield to form a low humidity air curtain for preventing fogging in said windshield.

5,701,753
AIR CONDITIONING APPARATUS
Kunio Iritani, Anjo, Japan, assignor to Nippondenso Co., Ltd., Kariya, Japan
Filed Jun. 25, 1996, Ser. No. 673,157
Claims priority, application Japan, Jun. 26, 1995, 7-159593; Jun. 27, 1995, 7-160557
Int. Cl.[6] F25B *41/00;41/04*
U.S. Cl. 62—211 **21 Claims**

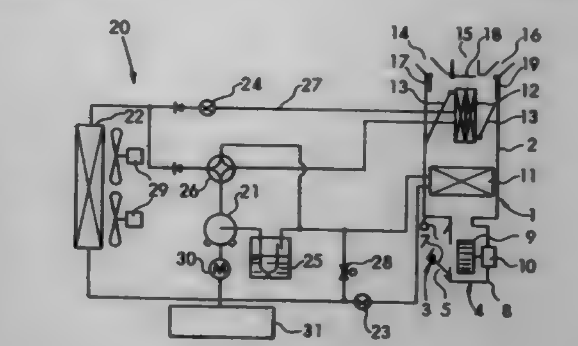

1. An air conditioning apparatus for conditioning air in a compartment, comprising:
a casing having an air passage, in which an inside air inlet for sucking the inside air and an outside air inlet sucking the outside air are formed at one end thereof and an air outlet communicating with said compartment at the other end;
a refrigeration cycle having a compressor for compressing refrigerant, a condenser disposed in said air passage for condensing the refrigerant from said compressor, an electric type pressure reducing device for reducing a pressure of the refrigerant from said condenser, an evaporator for evaporating the refrigerant from said electric type pressure reducing device;
a blower for generating an air flow in said air passage;
outlet temperature detecting means detecting outlet refrigerant temperature of said condenser,
high pressure detecting means for detecting high pressure of said refrigerant cycle; and
a control unit for controlling said electric type pressure reducing device so that a supercooling degree of liquid refrigerant in said condenser is set to a predetermined target supercooling degree,
said control unit including:
supercooling degree calculating means for calculating said supercooling degree of condensed liquid refrigerant in said condenser based on the condensed temperature calculated from said high pressure detected by said high pressure detecting means and said outlet refrigerant temperature detected by said outlet temperature detecting means, and
supercooling degree controlling means for controlling said electric type pressure reducing device in such a manner that said supercooling degree calculated by said supercooling degree calculating means is set to said target supercooling degree.

5,701,754
AUTOMOBILE REFRIGERATOR
Young Tai Choi, 4 Felter Hill Rd., Monroe, N.Y. 10950, and Yeung H. Huh, 53 Pleasant Ridge Dr., Poughkeepsie, N.Y. 12603
Filed Sep. 29, 1995, Ser. No. 536,388
Int. Cl.[6] B60H *1/32*
U.S. Cl. 62—244 **1 Claim**

1. A new and improved automobile refrigerator comprising, in combination:
an automobile dashboard having an exterior surface with a recess formed therein;
a door positioned over the recess to selectively open and close the recess;

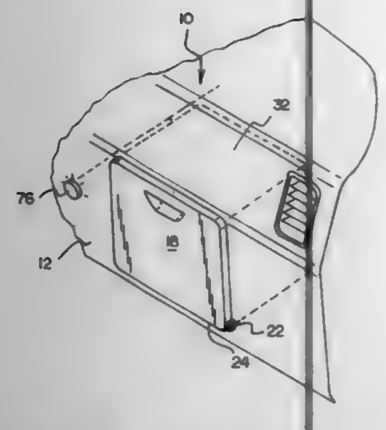

a hinge coupling a lower edge of the door with the lower edge of the recess to allow the pivoting of the door to provide or prohibit access to a space within the recess of the dashboard;
a box in the recess behind the door having upper and lower walls, side walls and a rear wall in a box-like configuration with an opening in the front of the walls terminating at the dashboard, wherein the box is adapted to hold six beverage containers;
thermal insulation located along all of the walls including the door to abate the flow of thermal energy to and from the space within the box;
a rectangular gasket formed on the interior surface of the door adapted to contact the dashboard adjacent to the periphery of the opening;
flexible connectors having upper ends coupled to the box at upper extents thereof, the connectors having lower ends coupled to the interior surface of the door interior of the gasket to preclude excessive movement of the door when opened to lower than the horizontal;
a serpentine link of tubing with thermally conductive fins secured to the box interior of the insulation on the rear wall of the box to provide coolness to the box, the tubing having an inlet for receipt of a cooling fluid from an evaporator of the automobile and an outlet for the return of cooling fluid to the evaporator of the automobile, the tubing having a valve to stop and start the flow of fluid through the tubing; and
a sensor in the box to sense the temperature therein and to turn on the valve to effect the flow of cooling fluid to the tubing with operator-controlled adjusting switch for varying the temperature within the box, the switch adapted to turn on the valve when an air conditioner of the automobile is running and further adapted to turn on a compressor of the automobile when an air-conditioner of the automobile was not previously running.

5,701,755
COOLING OF AIRCRAFT ELECTRONIC HEAT LOADS
Mark Hamilton Severson, and Steven Eric Squier, both of Rockford, Ill., assignors to Sundstrand Corporation, Rockford, Ill.
Filed Jan. 15, 1997, Ser. No. 7[illegible]3,973
Int. Cl.⁶ F25D *9/00;* **F25B** [illegible]
U.S. Cl. 62—402 **13 Claims**

1. An aircraft electronics cooling system comprising:
a sealable aircraft cabin;
first and second electronic heat loads, said first load requiring a relatively high temperature coolant and said second load requiring a relatively low temperature coolant;
means for maintaining a desired pressure within said cabin, including means for providing fresh air to said cabin and means for dumping exhaust air from said cabin overboard;
a rotatable turbine wheel associated with said dumping means such that air being dumped overboard is expanded to rotate said turbine wheel;

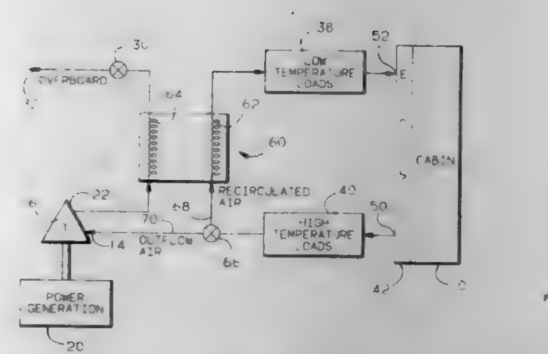

means connected to said turbine wheel for harnessing the rotation thereof, said harnessing means comprising a mechanical load driven by said turbine wheel; and
means for using air expanded from said turbine wheel for cooling at least one of said loads.

5,701,756
CONTAINER FOR FAST REFRIGERATION AND PRESERVATION OF MILK
Alberto Ghiraldi, Reno di Leggiuno, Italy, assignor to N.R. Development Limited, Ireland
Filed May 24, 1996, Ser. No. 653,470
Claims priority, application Italy, May 26, 1995, MI95A1093; Jun. 16, 1995, MI95A1294
Int. Cl.⁶ F25D *11/04;* **B67D** *5/62*
U.S. Cl. 62—438 **29 Claims**

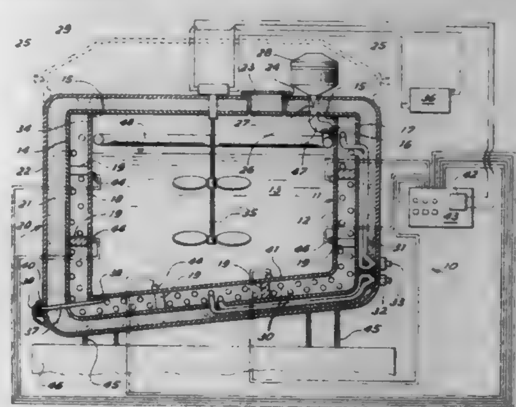

1. Container for the fast cooling of milk and for holding the milk at a predetermined optimal preservation temperature and comprising a body including an internal recipient wall defining a tank for containing the milk, an intermediate shell surrounding the tank in spaced relation thereto and connected in a sealed manner therewith, thereby to define in the space between the tank and the intermediate shell a jacket containing a liquid having a freezing temperature lower than said predetermined preservation temperature,
a plurality of spaced ducts arranged in said jacket and containing a refrigerating fluid for freezing said liquid to a static mass thereby to cause the wall of the tank to function as a cooling wall and the container being covered with an insulating external shell.

5,701,757
PORTABLE REFRIGERATER FOOD CONTAINER
Marilou Heverly, 129 Cresston Rd., Arnold, Md. 21012
Filed Jun. 28, 1996, Ser. No. 672,553
Int. Cl.⁶ F25D *3/08*
U.S. Cl. 62—457.2 **6 Claims**

1. A Portable Food Refrigeration System comprising:

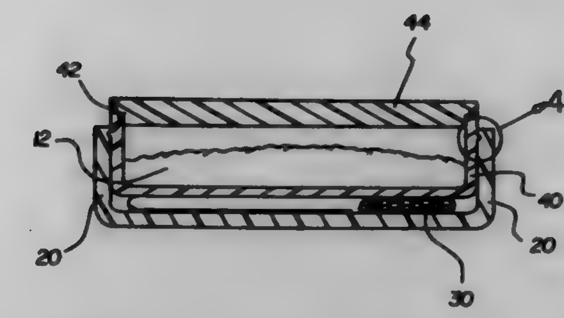

an outer pan constructed from a rigid insulating material including at least one handle secured to the upper exterior portion;
a gel pack removably positioned on the interior bottom surface which is freezable; and
an inner pan formed to a shape similar to the outer pan for retaining food and including at least one handle secured to the upper exterior portion, said inner pan being slidably positionable within in the interior of the outer pan to produce a nested relationship between said inner and outer pans;
wherein one of said pans has a sealing protrusion located substantially adjacent to and along the upper edge of said one pan and the other of said pans has a sealing groove located substantially adjacent to and along the upper edge of said other pan such that when said pans are placed in a nested relationship said sealing groove and said sealing protrusion are moved into a mated condition, wherein the mated condition of said sealing protrusion and said sealing groove forms a substantially air tight barrier and resists movement of said inner pan out of the nested relationship with said outer pan.

5,701,758
REFRIGERATION SYSTEM ACCUMULATING VESSEL HAVING A BRAZED, METAL-CLAD DEFLECTOR
Cary Haramoto, 108 Pamela La., Newark, N.Y. 14513, and Tom C. Wilson, 104 Elm St., Booneville, Miss. 38829
Filed Aug. 21, 1996, Ser. No. 700,948
Int. Cl.⁶ F25B *43/00;* **B01D** *45/08*
U.S. Cl. 62—503 **17 Claims**

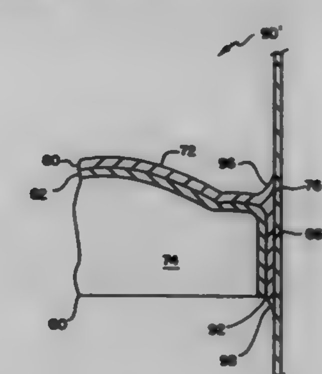

1. In an accumulating vessel for use in a refrigeration system wherein a partially vaporized refrigerant is circulated therethrough, said vessel having an inlet port for receiving the refrigerant and an outlet port for passing the refrigerant from said vessel and comprising: a generally cylindrical housing having first and second end portions, and a body portion with a generally continuous circumferential inner surface, said portions together defining an internal chamber; an inlet tube opening into fluid communication with said internal chamber at a first location defining said inlet port; an outlet tube opening into fluid communication with said internal chamber at a second location defining said outlet port; and a baffle disposable within said chamber intermediate said inlet port and said outlet port for deflecting refrigerant from said inlet port over said outlet port, said baffle having an outer surface extending to an outer periphery configured for defining at least a pair of contact surfaces with the inner surface of the body portion of said housing spacing the remainder of the periphery of said baffle a predetermined radial distance from said inner surface for the flow of said refrigerant therebetween, a method of joining said baffle to said housing comprising the steps of:
(a) providing said baffle as being formed of a metal material having a layer of a metal alloy coated on at least a portion of the outer surface of said baffle including said contact surfaces, said metal alloy selected as having a liquidus temperature below the melting point of said metal material;
(b) disposing said baffle within said housing to receive the metal alloy coated contact surfaces of said baffle in an abutting engagement with the inner surface of the body portion of said housing whereby the metal alloy layer coated on said contact surfaces is interposed between said contact surfaces and the inner surface of the housing body portion to provide a predetermined clearance between said contact surfaces and the inner surface of the housing body portion;
(c) heating said metal alloy layer to a temperature which is above the liquidus temperature of said alloy and below the melting point of said metal material for a time sufficient to liquefy at least a portion of said alloy coated on the contact surfaces of the outer surface of said baffle; and
(d) cooling said layer to solidify the liquefied alloy joining at least portion of the contact surfaces of the outer periphery of said baffle to the inner surface of said housing.

5,701,759
ACCUMULATOR HAVING A HEAT INSULATING COVER
Dietmar Boehme, Duisburg, Germany, assignor to Ford Global Technologies, Inc., Dearborn, Mich.
Filed Nov. 21, 1996, Ser. No. 755,530
Claims priority, application Germany, Nov. 22, 1995, 195 43 463.3
Int. Cl.⁶ F25B *43/00*
U.S. Cl. 62—503 **2 Claims**

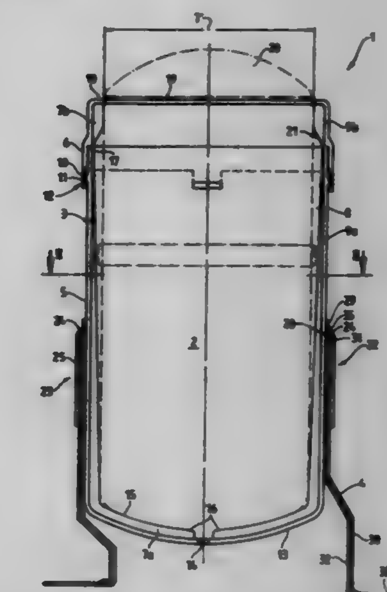

1. An accumulator assembly for an air conditioning system of an automotive vehicle, comprising:
accumulator for receiving refrigerant therein; and
a heat insulating container surrounding said accumulator, said heat insulating container including:
a generally cylindrical top member having a top surface and a generally cylindrical wall projecting therefrom having an interior surface and an exterior surface, said top member including a plurality of rib members extending vertically on

the interior surface thereof, said top member rib members being tapered at one end thereof;

a generally cylindrical lower member having a base member with a condensate relieving aperture formed thereinto, said lower member further having a generally cylindrical wall projecting vertically from said base member to an open end which defines an accumulator receiving volume thereby, said wall having an interior surface and an exterior surface, said top member being matingly engageable with said lower member, said lower member including:

a plurality of rib members being formed on and extending vertically along the interior surface of said wall, said rib members being tapered at the open end, said rib members further extending radially across said base member;

a plurality of mounting devices formed on the exterior surface thereof, wherein said accumulator assembly can be mounted to a stationery surface by said mounting devices, each of said mounting devices including a pocket-shaped socket, the pocket-shaped socket including a short arm portion extending horizontally away from the exterior surface of said lower member and a long arm portion extending vertically from said short arm portion so as to define a receiving space thereby for receiving a mounting stud therein, said short arm portion including an opening for receiving a portion of said mounting stud therethrough; and

an air gap formed by said rib members and interposed between said accumulator and said interior wall of said lower member.

5,701,760

REFRIGERANT EVAPORATOR, IMPROVED FOR UNIFORM TEMPERATURE OF AIR BLOWN OUT THEREFROM

Eiichi Torigoe, and Masahiro Shimoya, both of Kariya, Japan, assignors to Denso Corporation, Kariya, Japan

Filed Oct. 16, 1996, Ser. No. 730,990

Claims priority, application Japan, Oct. 20, 1995, 7-273221; Jul. 11, 1996, 8-182307

Int. Cl.^{6} F25B *39/02*

U.S. Cl. 62—524 **11 Claims**

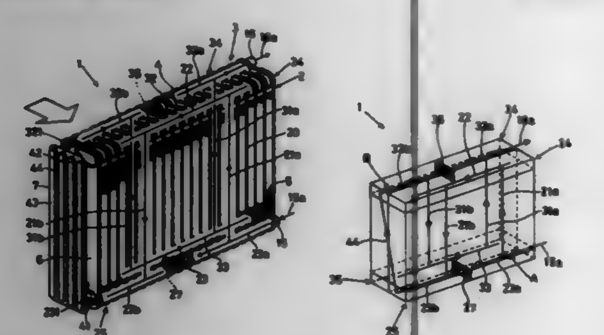

1. A refrigerant evaporator for evaporating refrigerant flowing therein so as to cool outside air flowing therethrough, comprising:

first evaporation passage means for defining plural first evaporation passages through which the refrigerant flows, said plural first evaporation passages being formed vertically and arranged substantially in parallel with each other in a direction substantially perpendicular to the flowing direction of said outside air;

a first tank portion connected to each of upper ends and lower ends of said plural first evaporation passages, said first tank portion being extended in a direction crossing said first evaporation passages;

second evaporation passage means for defining plural second evaporation passages through which the refrigerant flows, said plural second evaporation passages being formed vertically and arranged substantially in parallel with each other in a direction substantially perpendicular to the flowing direction of said outside air, said plural second evaporation passages being disposed adjacent to said first evaporation passages at a downstream side of said first evaporation passages with respect to the flowing direction of said outside air;

a second tank portion connected to each of upper ends and lower ends of said plural second evaporation passages, and said second tank portion being extended in a direction crossing said second evaporation passages; and

communication means for defining a communication passage for communicating between said plural first evaporation passages and said plural second evaporation passage;

wherein the refrigerant flows in the same vertical direction at least in portions where said plural first evaporation passages and said plural second evaporation passages overlap with each other with respect to the flowing direction of the outside air, and the flowing direction of the refrigerant in said first tank portion connected to said first evaporation passages and that in said second tank portion connected to said second evaporation passages are opposite to each other.

5,701,761

METHOD AND INSTALLATION FOR THE LIQUEFACTION OF NATURAL GAS

Isabelle Prevost, Conflans Sainte Honorine, and Alexandre Rojey, Rueil Malmaison, both of France, assignors to Institut Francais du Petrole, Rueil Malmaison, France

PCT No. PCT/FR95/01281, § 371 Date Jun. 3, 1996, § 102(e) Date Jun. 3, 1996, PCT Pub. No. WO96/11370, PCT Pub. Date Apr. 18, 1996

PCT Filed Oct. 3, 1995, Ser. No. 652,527

Claims priority, application France, Oct. 5, 1994, 94 12046

Int. Cl.^{6} F25J *3/00*

U.S. Cl. 62—613 **13 Claims**

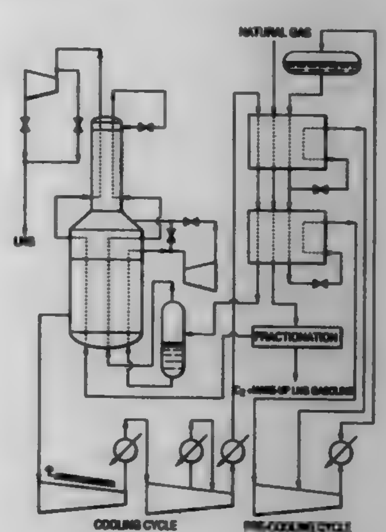

1. Method of liquefying a pressurised natural gas in at least one cooling cycle using a mixture of cooling fluids, comprising the steps of:

at least partially condensing the cooling fluid mixture by compressing it and cooling it using an external cooling fluid, to obtain at least on vapour fraction and at least one liquid fraction,

separating the at least one vapour fraction from the at least one liquid fraction in a separator;

separately expanding each of the vapour and liquid fractions in separate expansion devices to produce a light fluid M1 mainly consisting of a vapour phase and a heavy fluid M2 mainly consisting of a liquid phase, wherein at least a portion of the vapour fraction is fed directly from the separator to the expansion device and directly expanded after being separated from the liquid fraction,

mixing at least some of the fluids M1 and M2 to obtain a low-temperature mixture, and

liquefying and undercooling the pressurised natural gas by a process of heat exchange with the low-temperature mixture.

5,701,762

APPARATUS FOR RECOVERING HIGH-BOILING POINT SOLVENTS

Mikio Akamatsu; Kenji Seki, both of Shizuoka; Katsuhiro Yamashita, Kanagawa; Takeya Kobayashi, Tokyo, and Takashi Taniguchi, Kanagawa, all of Japan, assignors to Nichias Corporation, and Toho Chemical Engineering and Construction Co., Ltd., both of Tokyo, Japan

Filed Dec. 20, 1996, Ser. No. 771,160

Claims priority, application Japan, Dec. 21, 1995, HEI. 7-333344

Int. Cl.^{6} F25J *1/00*

U.S. Cl. 62—636 **8 Claims**

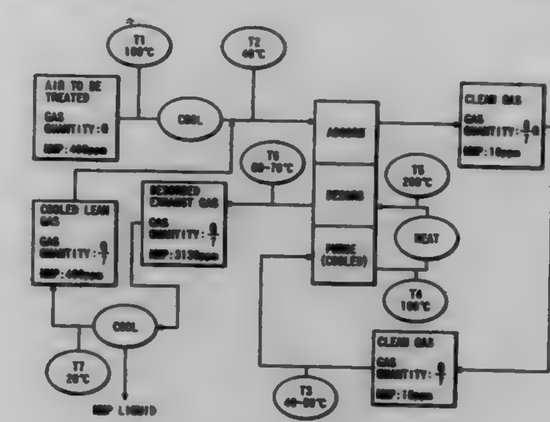

1. An apparatus for recovering a high-boiling point solvent comprising:

a rotor comprising, a honeycomb structure having an adsorbent supported thereon, a rotational axis, tubular air passageways extending therethrough parallel to the rotational axis and first and second end faces;

drive means for driving the rotor;

a separator comprising radially arranged plate members provided in a face-to-face relationship with the first and second end faces of the rotor for partitioning the neighborhood of each of the rotor end faces into a adsorption zone and a desorption zone;

fan means for supplying air containing a high-boiling point solvent boiling at 150° to 300° C. to the first end face of the absorption zone, for releasing a part of a clean gas effluent from the second end face of the rotor to an air atmosphere, and for supplying a remainder of the clean gas is supplied into the desorption zone subsequent to the adsorption zone in the direction of the rotation of the rotor;

heating means installed behind the fan means for heating the remainder of the clean gas;

cooling means for separating the solvent enriched gas effluent from the desorption zone of the rotor into a liquefied product to be recovered and a cooled lean gas; and

return means for mixing the cooled lean gas with the high-boiling point solvent containing air.

5,701,763

CRYOGENIC HYBRID SYSTEM FOR PRODUCING LOW PURITY OXYGEN AND HIGH PURITY NITROGEN

Henry Edward Howard, and Dante Patrick Bonaquist, both of Grand Island, N.Y., assignors to Praxair Technology, Inc., Danbury, Conn.

Filed Jan. 7, 1997, Ser. No. 778,075

Int. Cl.^{6} F25J *1/00*

U.S. Cl. 62—644 **10 Claims**

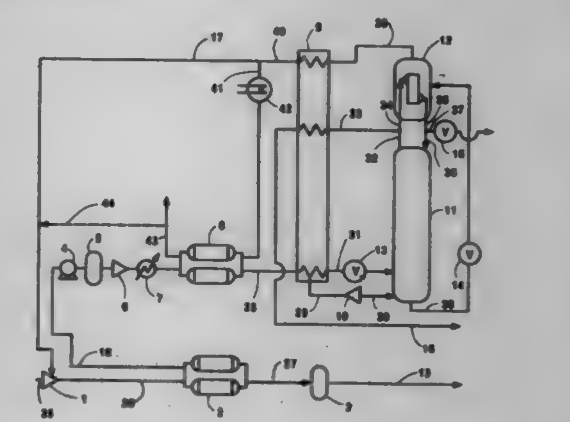

1. A method for producing low purity oxygen and high purity nitrogen comprising:

(A) passing feed air into an adsorbent system comprising at least one adsorbent bed and adsorbing nitrogen from the feed air within the adsorbent system to produce oxygen-enriched vapor and nitrogen-enriched vapor;

(B) recovering oxygen-enriched vapor as product low purity oxygen;

(C) passing nitrogen-enriched vapor into a column and separating the nitrogen-enriched vapor by cryogenic rectification within the column into nitrogen top fluid and oxygen-containing bottom fluid; and

(D) recovering nitrogen top fluid as product high purity nitrogen.

5,701,764

PROCESS TO PRODUCE MODERATE PURITY OXYGEN USING A DOUBLE COLUMN PLUS AN AUXILIARY LOW PRESSURE COLUMN

Rakesh Agrawal, Emmaus; Zbigniew Tadeusz Fidkowski, Macungie, and Donn Michael Herron, Fogelsville, all of Pa., assignors to Air Products and Chemicals, Inc., Allentown, Pa.

Filed Aug. 6, 1996, Ser. No. 692,990

Int. Cl.^{6} F25J *3/00*

U.S. Cl. 62—646 **16 Claims**

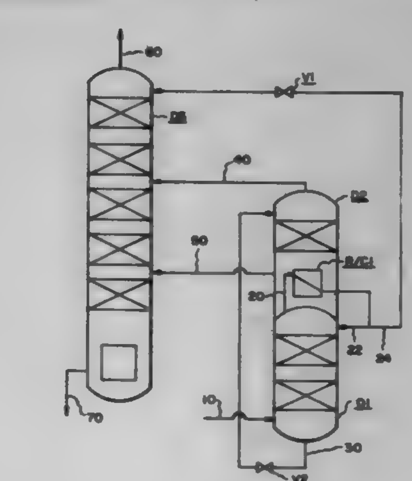

1. A process for the cryogenic distillation of an air feed to produce an oxygen product using a distillation column system comprising a high pressure column, a main low pressure column and an auxiliary low pressure column, said process comprising:
(a) feeding at least a portion of the air feed to the bottom of the high pressure column;
(b) removing a nitrogen-enriched overhead from the top of the high pressure column, condensing at least a first portion of it in a first reboiler/condenser located in the bottom of the auxiliary low pressure column and feeding at least a first part of the condensed first portion as reflux to an upper location in the high pressure column;
(c) removing a crude liquid oxygen stream from the bottom of the high pressure column, reducing the pressure of at least a first portion of it and feeding said portion as impure reflux to the top of the auxiliary low pressure column;
(d) removing a crude nitrogen overhead from the top of the auxiliary low pressure column and feeding it directly as a vapor to an intermediate location in the main low pressure column;
(e) removing an oxygen-enriched stream from a lower location in the auxiliary low pressure column as a vapor and/or liquid and feeding it to an intermediate location in the main low pressure column below the intermediate feed location of the crude nitrogen overhead in step (d);
(f) removing a nitrogen rich overhead from the top of the main low pressure column as waste nitrogen; and
(g) removing the oxygen product from a lower location in the main low pressure column as a vapor and/or liquid.

5,701,765
CHANGEABLE ARTICLES OF JEWELRY AND METHOD OF USING THEM
Claudio Christian Cerqua, Largo Giuseppe Veratti, 29 00146 Rome, Italy
PCT No. PCT/IT94/00040, § 371 Date Nov. 4, 1994, § 102(e) Date Nov. 4, 1994, PCT Pub. No. WO94/22341, PCT Pub. Date Oct. 13, 1994
PCT Filed Mar. 30, 1994, Ser. No. 331,587
Claims priority, application Italy, Apr. 7, 1993, RM93A0224; Oct. 13, 1993, RM93A0690; Nov. 23, 1993, RM93A0773; Nov. 23, 1993, RM93A0772; Mar. 30, 1994, RM93A0223
Int. Cl.[6] A44C *9/00*
U.S. Cl. 63—15.4 **7 Claims**

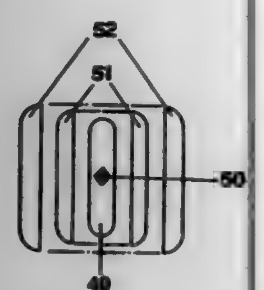

1. A ring for symbolizing important events in the life of an individual, comprising:
an inner ring which symbolizes a first said important event;
an intermediate hollow ring which symbolizes a second said important event, said intermediate ring having an appearance which is different from said inner ring, said intermediate ring completely enclosing the inner ring and being retained on it;
an outer hollow ring which symbolizes a third said important event, said outer ring having an appearance which is different from that of said inner and intermediate rings, said outer ring completely enclosing the inner and intermediate ring and being retained on said intermediate ring.

5,701,766
METHOD FOR BROADENING A TUBULAR KNITTED FABRIC BY A FLAT KNITTING MACHINE, A KNIT DESIGN APPARATUS AND A MEMORY THEREFOR, AND KNITTED TUBULAR FABRIC
Nobuyasu Takahashi, Naga-gun, Japan, assignor to Shima Seiki Manufacturing, Ltd., Wakayama, Japan
Filed Nov. 21, 1996, Ser. No. 752,243
Claims priority, application Japan, Nov. 24, 1995, HEI-7-305709
Int. Cl.[6] D04B *7/10*
U.S. Cl. 66—70 **5 Claims**

1. A broadening method of using a flat knitting machine having at least a pair of abutting needle beds, each having a large number of needles, holding a first knitted fabric on needles of a first needle bed, holding a second knitted fabric on needles of a second needle bed, and broadening a tubular knitted fabric comprising said first knitted fabric and said second knitted fabric, and
said broadening method comprising repeating a series of steps for forming a broadening stitch, a series of steps for transferring the broadening stitch thus formed, and a series of steps for compensating for broadening, and
said series of steps for forming a broadening stitch including
feeding yarn to needles holding the first knitted fabric to form a new row of stitches on the first knitted fabric, and feeding yarn to an empty needle outside the first knitted fabric on the second needle bed to form a hooked part,
twisting said hooked part on the second needle bed to make prolongations on both sides of the hooked part cross and change it into a loop, and feeding yarn to needles holding the second knitted fabric to form a new row of stitches on the second knitted fabric, and
transferring said loop onto an empty needle being outside the first knitted fabric on the first needle bed to make it a broadening loop, and
said series of steps for transferring said formed broadening stitch including
feeding yarn to needles holding the first knitted fabric except a needle corresponding to said broadening loop to form a new row of stitches on the first knitted fabric,
feeding yarn to the needle corresponding to said broadening loop on the first needle bed to form a stitch subsequent to the broadening loop, and feeding yarn to needles holding the second knitted fabric to form a new row of stitches on the second knitted fabric, and
transferring the stitch subsequent to said broadening loop on the first needle bed to an empty needle outside the second knitted fabric on the second needle bed to broaden the second knitted fabric, and
said series of steps for compensating for broadening including,
feeding yarn to needles holding the first knitted fabric to form a new row of stitches on the first knitted fabric, and feeding yarn to an empty needle outside the first knitted fabric to form a hooked part,
twisting said hooked part on the second needle bed to change it into a loop, and feeding yarn to needles holding the second knitted fabric to form a new row of stitches on the second knitted fabric, and
transferring said loop on the second needle bed onto an empty needle outside the first knitted fabric on the first needle bed to broaden the first knitted fabric.

5,701,767
PULSATOR FOR A WASHING MACHINE
In-Su Cho, Kwangju, Rep. of Korea, assignor to Daewood Electronics Co. Ltd, Seoul, Rep. of Korea
Filed Jun. 27, 1996, Ser. No. 670,562
Claims priority, application Rep. of Korea, Jun. 30, 1995, 95-18773
Int. Cl.[6] D06F *17/10*
U.S. Cl. 68—134 **6 Claims**

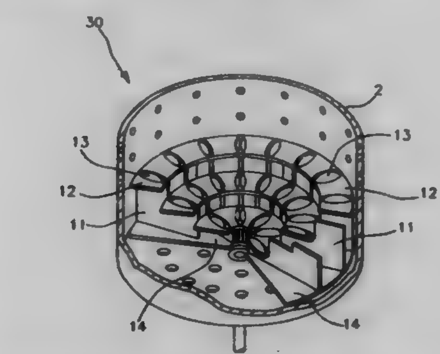

1. A pulsator for a washing machine mounted in a washing tub and for generating a waterflow in washing water in the washing tub by a rotation according to a rotation of a shaft housing, comprising:
a base plate fixed to the shaft housing to be rotated according to a rotation of the shaft housing;
a plurality of plate-shaped wings radially fixed to the upper surface of the base plate so as to be rotated according to the rotation of the base plate, and for forming a concentric waterflow in the washing water, each of the plurality of plate-shaped wings having a multi-stepped edge;
a plurality of cover plates fixed on the multi-stepped edges of the plurality of plate-shaped wings, each being a disc-shaped plate having a hole in the center portion;
a plurality of protrusions radially and in a certain length formed on the upper surface of each of the plurality of cover plates, and for generating a waterflow of the washing water vertically oriented toward the top of the washing tub by being rotated according to the rotation of the base plate.

5,701,768
BOX CAR LOCK
Ek Ong Kar S. Khalsa, Rte. 1, Box 219, Espanola, N. Mex. 87532
Continuation of Ser. No. 383,245, Feb. 3, 1995, abandoned. This application Oct. 10, 1996, Ser. No. 728,664
Int. Cl.[6] E05B *13/00*
U.S. Cl. 70—14 **5 Claims**

1. A removably securable locking device, mountable on a door to be secured against opening without any permanent attachment thereto, for preventing the rotation of a rotatable handle which is operable in a circular path of movement for opening the door comprising:
an insertion member extending a first length and mountable on a door to be secured against opening without any fixed attachment thereto when in operative engagement to secure the door,
said insertion member having a retaining portion at a first end thereof for engaging a portion of a rotatable handle operable in a circular path of movement to open the door which is to be secured to prevent rotation of the handle in a circular path of movement,
said insertion member further including an insertion portion extending parallel to and spaced from said retaining portion,
said insertion member being unattached to the door upon which it is mountable and further including a lock receiving portion at a second end thereof,
said lock receiving portion having at least one opening therein for receiving therethrough the hasp of a lock;

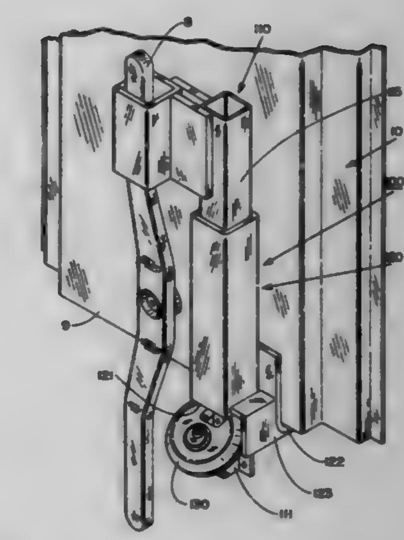

a receiving member extending a second length which is less than the length of said insertion member mountable on the door to be secured against opening without any fixed attachment thereto when inoperative engagement to secure the door,
said receiving member being co-axially alignable with said insertion member for receiving therethrough in telescoping relationship said lock receiving portion of said insertion member upon relative axial movement thereof,
said receiving member having an uppermost open end through which said lock receiving portion of said insertion member is received, and a lowermost open end through which said lock receiving portion of said insertion member is passed to telescopically join said insertion member to said receiving member;
the first length of said insertion member and the second length of said receiving member being such that said at least one opening of said lock receiving portion will extend outwardly through said lowermost end of said receiving member when said insertion member is inserted into said receiving member when said insertion member retaining portion engages a portion of the rotatable handle and said receiving member is mounted on the door to be secured against opening; and
a stop member secured to said receiving member adjacent to said lowermost end thereof for limiting the axial movement of said insertion member relative to said receiving member when said retaining portion engages the portion of the rotatable handle for preventing the rotation thereof in a circular path of movement.

5,701,769
GRASPING APPARATUS AND METHOD
Jeffrey D. Hall, P.O. Box 2753, Augusta, Ga. 30914
Filed May 30, 1996, Ser. No. 656,429
Int. Cl.[6] E05B *73/00*
U.S. Cl. 70—19 **33 Claims**

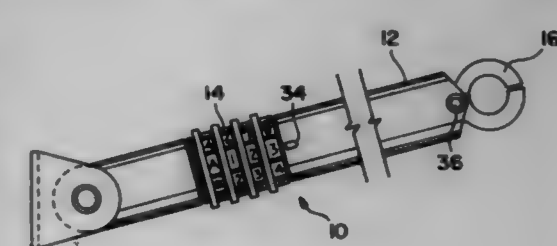

1. A grasping apparatus comprising:
a sleeve having opposing ends;
a shaft within and movable relative to the sleeve;

a pair of clamping members for opening and closing on each opposing end of the sleeve, wherein one of the clamping members comprises a pair of clamping arms pivotally attached to the shaft, the other clamping member comprises a pair of opposing, flexible clamping arms each including a plurality of clamping sections, and a pulling member connected to the shaft and at least one of the clamping sections of each clamping arm;

whereby slidable movement of the sleeve along the shaft in one direction opens both clamping members and slidable movement of the sleeve along the shaft in an opposite direction closes both clamping members.

5,701,770

GUN SAFE WITH DUAL METHOD OF GAINING ACCESS THEREIN

Nancy A. Cook, and Anne M. Murray, both of 380 Newport Ave., Long Beach, Calif. 90814

Filed Jan. 21, 1997, Ser. No. 792,947

Int. Cl.⁶ E05B *65/52*

U.S. Cl. 70—63 **6 Claims**

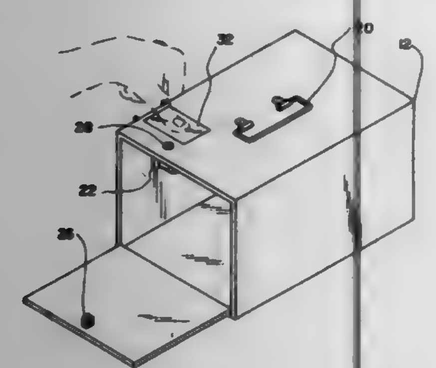

1. A new and improved gun safe with dual method of gaining access therein comprising, in combination:

a portable gun safe with a rectangular configuration having a top face, a bottom face, a pair of side faces and a pair of end faces formed therebetween thereby defining an interior space, one of the end faces being hingably coupled at a lower end thereof to the bottom face for allowing it to be pivoted between an open orientation and a closed orientation, the gun safe further including a handle having a generally U-shaped configuration with a pair of ends hingably coupled to a central extent of the top face for carrying purposes;

a solenoidal locking mechanism situated within the interior space of the gun safe on the top face thereof adjacent an upper end of the hingably coupled end face, the solenoidal locking mechanism having a pin which is removably situated within an aperture of a tab formed in the upper end of the hingably coupled end face, the pin having a first orientation inserted within the aperture of the tab when the locking mechanism is not in receipt of an unlock signal for precluding access within the interior space of the gun safe and further having a second orientation removed from the aperture of the tab when the locking mechanism is in receipt of the unlock signal for allowing access within the interior space of the gun safe;

said locking mechanism further having a key mechanism situated exterior of the gun safe on the top face thereof, the key mechanism adapted to allow the insertion therein of a key for allowing a user to manually transfer the pin of the locking mechanism from the first orientation to the second orientation thereof;

fingerprint scanning means positioned within the interior space of the gun safe adapted to detect the placement of a fingerprint adjacent thereto whereat the scanning means is adapted to scan the fingerprint and convert the same into a digital format for processing;

said fingerprint scanning means further including a transparent panel situated on the top face of the gun safe adjacent a side face thereof for allowing the temporary placement of a fingerprint of a user thereon to be scanned by the fingerprint scanning means upon the detection thereof;

a plurality of cards each with a rectangular configuration having a top face and a bottom face, the bottom face of each card having a fingerprint of a predetermined authorized user printed pictorially thereon;

said fingerprint scanning means further including a slot formed in a side face of the gun safe adjacent the transparent panel, the slot adapted to allow the insertion of one of the cards therein for being scanned by the fingerprint scanning means upon the detection thereof;

memory means situated within the interior space of the gun safe for storing a fingerprint of at least one predetermined authorized user in a digital format; and

verification means situated within the interior space of the safe and connected to the locking mechanism, memory means, and the fingerprint scanning means, the verification means adapted to transmit the unlock signal to the locking mechanism upon the matching of a scanned fingerprint with at least one of the fingerprints stored in the memory means.

5,701,771

HANDLEBAR LOCKING DEVICE

Robert V. Bailey, 819 N. 31 Rd., Hollywood, Fla. 33021

Filed May 8, 1995, Ser. No. 438,158

Int. Cl.⁶ B60R *25/00*

U.S. Cl. 70—233 **14 Claims**

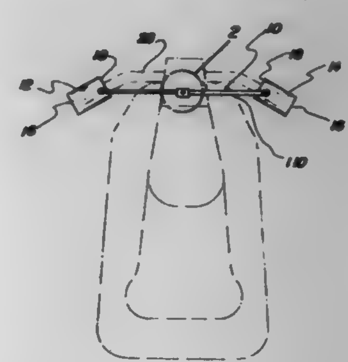

1. A handlebar locking device for use with a motorized vehicle comprising:

a pair of tubular members with each having a distal end, a proximal end and an opening therethrough being capable of receipt therein a handle of a handlebar, each tubular member further having an exterior surface with a ball joint assembly spaced from the proximal end attached thereto;

a locking assembly having a box-like configuration with a bottom wall and a pair of proximal side walls having a passage therethrough with a chamber therein, the chamber having a first wall with a locking lever attached thereto and an orifice with a locking cylinder therein;

a first rod positioned within the locking assembly and engaging one of the ball joint assemblies of one of the tubular members; and

a second rod having an external end engaging one of the ball joint assemblies of one of the tubular members and an internal end with ribbed projections for engaging the locking lever of the locking assembly to secure the locking device on to the handlebar so as to prevent use.

5,701,772

MULTISHAFT COMBINATION LOCK

Kenneth Wang, 3856 Udell Ct., Los Angeles, Calif. 90027

Filed May 15, 1996, Ser. No. 647,765

Int. Cl.⁶ E05B *37/00*

U.S. Cl. 70—284 **21 Claims**

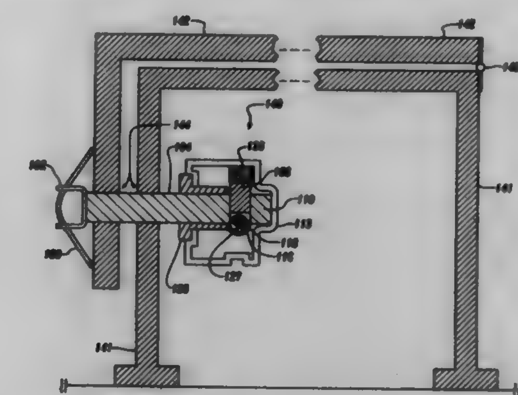

1. A combination lock to be used for locking dynamic and static objects, said combination lock comprising:

a lock body;

an alignment sleeve rotatably fixed to said lock body, said alignment sleeve capable of being rotated about a principal axis of said alignment sleeve and having a hole coaxial with said principal axis of said alignment sleeve, said alignment sleeve having a first end positioned within said lock body; and

a detachable pin with a floating bushing said floating bushing capable of being selectively misaligned with a principal axis of said detachable pin, said detachable pin and said floating bushing adapted to be inserted coaxially with said principal axis of said alignment sleeve into said lock body through said hole of said alignment sleeve, said floating bushing being positioned beyond said first end of said alignment sleeve when said detachable pin is completely inserted in said lock body, wherein said floating bushing prevents said detachable pin from being removed when said floating bushing is misaligned with said principal axis of said detachable pin.

5,701,773

DUAL FUNCTION APPARATUS FOR OPENING AND REMOVING AUTOMOTIVE SIDE-BAR IGNITION LOCKS

Frank Markisello, 91-10 Liberty Ave., Ozone Park, N.Y. 11417

Filed Jan. 29, 1996, Ser. No. 592,892

Int. Cl.⁶ E05B *19/20*

U.S. Cl. 70—465 **9 Claims**

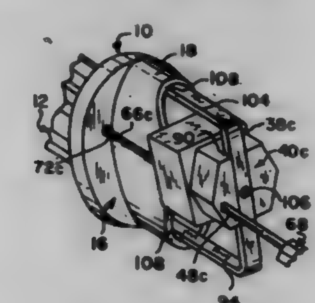

1. In combination with automotive side-bar ignition locks having wafer elements therein and a plurality of matched recesses facing outwardly, dual-function apparatus for turning on, and for removing without damage, said side-bar ignition locks, which comprises:

a combination metal tool having a plurality of projections extending outwardly therefrom, said projections being positioned, sized and shaped complementarily to, and for fitting engagement with, said recesses in any automotive side-bar ignition lock to be serviced, said projections comprising:

one centrally disposed rectangular projection dimensioned to fit into said ignition lock's keyway; and

at least one pair of diametrically opposite projections on said combination tool for fitting engagement in corresponding recesses in said ignition lock;

said combination tool having its rear portion shaped hexagonally to accept a wrench for turning said combination tool, applying torque to said projections and thus forcing said side-bar ignition lock to rotate to its ON position; and

said combination tool also having a drill guide hole horizontally through its body, said guide being so located that, with said ignition lock in its OFF position and said combination tool operatively positioned thereon by said plurality of projections, a hole drilled through said guide hole into said lock will provide access to the area directly facing said lock's side-bar.

5,701,774

CONTROL DEVICE FOR A CONTINUOUS HOT-ROLLING MILL

Hiroyuki Imanari, Chofu, and Hiroshi Otobe, Oita, both of Japan, assignors to Kabushiki Kaisha Toshiba, Kawasaki, Japan

Continuation of Ser. No. 374,908, Jan. 19, 1995. This application Feb. 28, 1997, Ser. No. 808,506

Claims priority, application Japan, Jan. 19, 1994, 6-004001

Int. Cl.⁶ B21B *37/00*

U.S. Cl. 72—8.6 **3 Claims**

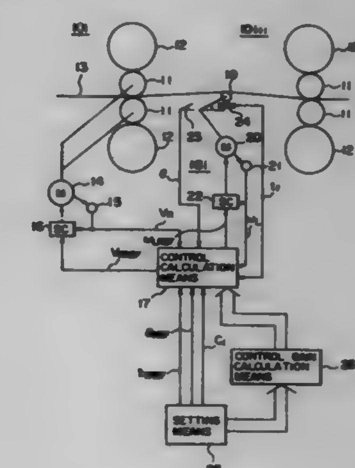

1. A control device for a continuous hot-rolling mill having a number of stands, each of which are driven by a main rolling mill electric motor, said control device comprising:

a main rolling mill electric motor speed detector which detects a rotational speed of said rolling mill main electric motor;

a main electric motor speed control means which compares the detected value of said speed detector with a main electric motor speed reference value and controls the rotational speed of said rolling mill main electric motor;

a tension detection means which is disposed between said number of stands and which detects a tension of said material which is being rolled by said stands;

a looper which controls the tension in said rolled material by means of adjusting a height of said looper;

a height detector which detects the height of said looper;

a looper electric motor which drives and adjusts the height of said looper;

a looper electric motor speed detector which detects a rotational speed of said looper electrical motor; and

a looper electric motor speed control means which compares the detected value of said looper electric motor speed detector

with a looper electric motor speed reference value and controls a drive speed of said looper electric motor,

wherein said looper electric motor speed reference value is formed based on the detected values of the tension detection means, the height detector, and the looper electric motor speed detector,

a setting means,

a control gain calculation means, and

a control calculation means,

said setting means setting in said control calculation means a tension target value for said rolled material tension and a looper height target value and setting in said control gain calculation means the values of variables in a process model of a multivariable system, a weighting parameter for reducing the tension, a weighting function for specifying the response and robust stability of the looper tension and a weighting function for specifying the response and robust stability of the looper height,

said control gain calculation means calculating the control gain from the process model variable values, a weighting parameter of said looper height, and a weighting function of said looper tension,

the control calculation means receiving the tension target value, looper height target value and the weighting parameter from said setting means, the control gain from said control gain calculation means, and the detected values from said main electric motor speed detector, said looper electric motor speed detector, said tension detector, and said height detector, and calculating the rotational speed command value for said main motor speed controlling means which controls the speed of said main electric drive motor of said rolling mill, and the rotational speed command value for said looper main electric motor speed control means which controls said looper main electric motor, so as to obtain a tension deviation between the tension target value and the tension and a deviation between the looper height target value, and the looper height so as to change the looper height target value by multiplying the tension deviation by the weighting parameter and adding the looper height target value thereto.

5,701,775
PROCESS AND APPARATUS FOR APPLYING AND REMOVING LIQUID COOLANT TO CONTROL TEMPERATURE OF CONTINUOUSLY MOVING METAL STRIP

Olivo Giuseppe Sivilotti, Kingston, Canada; Gino Luigi Leone, Russellville, Ky.; James Gordon Sutherland, Kingston, Canada; Herbert James Thorburn, Kingston, Canada, and Bruno Crosato, Kingston, Canada, assignors to Alcan International Limited, Montreal, Canada
Continuation of Ser. No. 840,448, Feb. 24, 1992, abandoned. This application Sep. 22, 1993, Ser. No. 125,343
Int. Cl.^{6} B21B *27/06;9/00*
U.S. Cl. 72—201 **51 Claims**

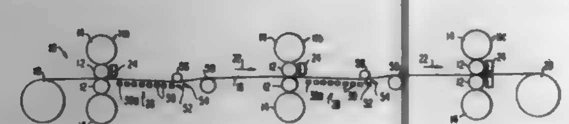

1. In cold rolling procedure wherein aluminum strip is advanced continuously longitudinally along a generally horizontal path with opposed major surfaces of the strip respectively facing upwardly and downwardly, through at least one roll stand for reducing the thickness of the strip by cold rolling, a process for cooling the strip from an initial temperature of up to 300° C., while advancing the strip at a velocity of at least 225 m/min., comprising the steps of:

(a) delivering coolant liquid into contact with only the downwardly facing surface of the advancing strip by discharging the coolant liquid upwardly, onto the downwardly facing strip surface, through a plurality of upwardly opening slots disposed below the strip in spaced relation thereto, the slots being spaced apart along the path and each extending, transversely of the path, across substantially the entire width of the strip, at a location downstream of said one roll stand in the direction of strip advance, while

(b) preventing the discharged coolant liquid from coming into contact with the upwardly facing surface of the strip, and,

(c) downstream of the plurality of slots in the direction of strip advance, removing coolant liquid from the downwardly facing strip surface.

5,701,776
SLOPED BOTTOM TANK

Jerry W. Cowan, and Jeffrey K. Felton, both of Rogersville, Mo., assignors to Custom Metalcraft, Inc., Springfield, Mass.
Filed Jun. 14, 1995, Ser. No. 490,177
Int. Cl.^{6} B21D *51/18;28/00*
U.S. Cl. 72—332 **13 Claims**

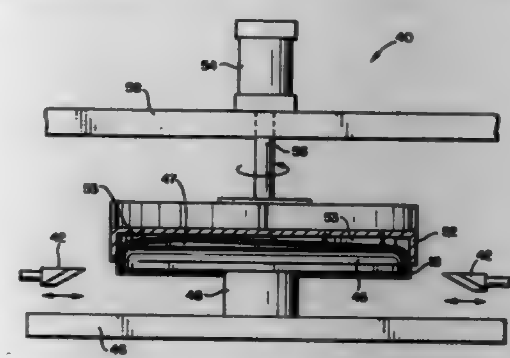

1. A method for forming the bottom of a tank for liquids, said tank having generally upwardly extending sides and a sloped bottom for complete drainage of liquid from the tank, said method comprising the steps of:

(a) providing a generally flat plate member;

(b) providing a head forming device having punch and die members, said punch member having at least one raised edge portion;

(c) positioning said plate member in said head forming device;

(d) forming said plate member in said head forming device by deforming said flat plate member against said punch and die members to provide a bottom wall portion having at least one downwardly sloping surface and upwardly extending side wall portions which extend continuously around the periphery of said bottom wall portion;

(e) providing a trim machine having cutting means and plate support means;

(f) providing said plate support means with at least one shim bar mounted on an outside edge thereof and a spacer bar mounted on said at least one shim bar so as to form a raised edge portion;

(g) positioning said formed plate member on said plate support means; and

(h) operating said cutting means of the trim machine to trim the side wall portions of said formed sheet member.

5,701,777
DRAWING METHOD AND APPARATUS

Naoki Yamanaka, and Kazutoshi Tsuge, both of Toyota, Japan, assignors to Toyota Jidosha Kabushiki Kaisha, Toyota, Japan
Filed Jul. 22, 1996, Ser. No. 685,419
Claims priority, application Japan, Jul. 24, 1995, 7-187518
Int. Cl.^{6} B21D *22/00;22/21*
U.S. Cl. 72—350 **10 Claims**

1. A drawing method comprising the following steps of:

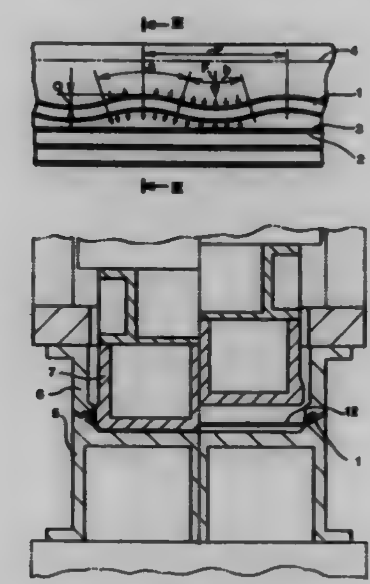

holding a blank between a blank holder and a die opposing said blank holder, said blank holder and said die including respective blank holding surfaces in which beads are formed for locking the blank between the blank holder and the die, said beads having at least a portion that varies in distance along a blank movement direction from a drawing profile of said blank in alternately an increasing distance and a decreasing distance from said drawing profile such that there is a plurality of at least one of said increasing distance and said decreasing distance; and

drawing said blank by a punch while said blank is being held between said blank holder and said opposing die.

5,701,778
PRESS HAVING GAS CYLINDERS OF PLASTICALLY DEFORMABLE MEMBERS FOR EVEN DISTRIBUTION OF BLANK-HOLDING FORCE ON PRESSURE MEMBER THROUGH CUSHION PINS

Kazunari Kirii, Aichi-ken, Japan, assignor to Toyota Jidosha Kabushiki Kaisha, Japan
Filed Mar. 2, 1995, Ser. No. 397,848
Claims priority, application Japan, Mar. 3, 1994, 6-033522
Int. Cl.^{6} B21D *24/08*
U.S. Cl. 72—351 **17 Claims**

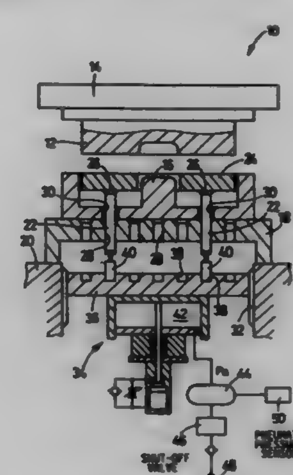

1. A press including (a) force applying means for producing a blank-holding force, (b) a cushion pad which receives said blank-holding force when said cushion pad is moved down, (c) a plurality of cushion pins disposed on said cushion pad, (d) a pressure member supported by said cushion pins at upper ends of the cushion pins remote from said cushion pad, so that said blank-holding force is transferred to said pressure member through said cushion pins to hold a blank placed on said pressure member, when said pressure member is moved down during a pressing operation on said blank, (e) a bolster disposed between said cushion pad and said pressure member, and (f) a lower die disposed on said bolster, at least one of said bolster and said lower die having a plurality of through-holes through which said cushion pins extend and by which said cushion pins are guided, said press comprising:

a plurality of mutually independent gas cylinders charged with a gaseous fluid, each of said gas cylinders having a piston fixed to an end of the corresponding one of said cushion pins, said gaseous fluid being compressed during downward movement of said pressure member, so as to establish substantially even distribution of said blank-holding force to said pressure member through all of said plurality of cushion pins,

each of said mutually independent gas cylinders having an outside diameter not larger than that of said cushion pins, whereby said gas cylinders fixed to said cushion pins are permitted to pass through said through-holes upon installation of said gas cylinders together with said cushion pins.

5,701,779
CHUCK HAVING FORMED JAWS

E. Russell Carter, Fredericksburg, Va., assignor to Power Tool Holders Incorporated, Wilmington, Del.
Filed Mar. 23, 1995, Ser. No. 409,493
Int. Cl.^{6} B21K *1/76*
U.S. Cl. 72—356 **14 Claims**

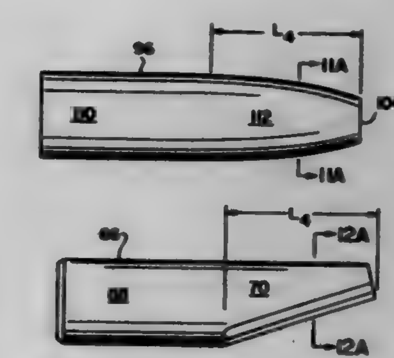

1. A method of making a jaw member for use with a chuck of the type utilized with a manual or powered driver having a rotatable drive shaft, said method comprising the steps of:

(a) providing a blank of a selected material, said blank generally configured as a cylinder of a first predetermined length;

(b) manipulatively forming by selective redistribution of material said blank into an intermediate configuration having a second predetermined length greater than said first predetermined length, said intermediate configuration having a generally cylindrical shank portion integrally extending into a tapered portion, said tapered portion having a third predetermined length and a diameter decreasing in the direction of a first end from a maximum diameter at an intermediate location on said blank adjacent said shank portion; and

(c) manipulatively forming by selective redistribution of material said tapered portion of said intermediate configuration into a bite portion having a generally oblique surface defining thereon a jaw face,

thereby producing a jaw member having a shank portion and a bite portion.

5,701,780

INSTALLATION FIN FOR WINDOWS AND DOORS

Jim Ver Meer, Pella, Iowa, assignor to Pella Corporation, Pella, Iowa

Division of Ser. No. 359,288, Dec. 19, 1994, Pat. No. 5,619,828. This application May 14, 1996, Ser. No. 645,605

Int. Cl.⁶ B21D *11/08*

U.S. Cl. 72—379.2 **20 Claims**

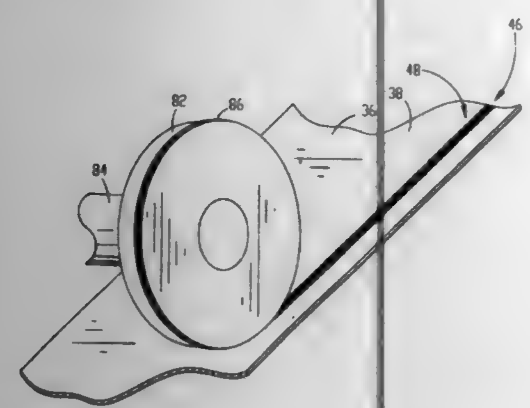

1. A method of producing a fenestration installation fin comprising the steps of:

(a) placing an elongated, thin, fin body into contact with a knurling wheel, said body presenting a pair of opposed faces and a pair of elongated, opposed, spaced apart, inner and outer side margins, said inner margins including structure for attachment to a fenestration product;

(b) using said knurling wheel, forming in said body an elongated fold line generally parallel with and proximal to said inner side margin for permitting selective pivotal movement of an outer section of said fin body about said fold line,

step (b) including the step of forming said fold line by producing a plurality of elongated, aligned depressions in at least one face of said body, forming said depressions so that the long axes thereof present an oblique angle relative to the longitudinal axis of said body thereby cooperatively forming said fold line and so that said depressions are discreet and axially spaced from each other, and forming said depressions so that the spacing therebetween and the depth thereof cooperatively define a line of weakness along said fold line.

5,701,781

SYSTEM AND METHOD FOR CONTROLLING MOVEMENT OF A TRANSFER SYSTEM

Lyle T. Giles, Harper Woods, Mich., assignor to Livernois Research & Development Company, Dearborn, Mich.

Filed Jul. 9, 1996, Ser. No. 676,533

Int. Cl.⁶ B21D *43/05*

U.S. Cl. 72—405.12 **19 Claims**

1. A system for controlling movement of a transfer system between operable and serviceable positions in a manufacturing system such as a stamping press, the system comprising:

a driveable crank arm mounted to the manufacturing system;

a plurality of swing arms connecting the crank arm to the transfer system, the plurality of swing arms being interconnected and defining a plurality of pivot connections so as to control movement of the transfer system between the operable and serviceable positions when the crank arm is driven; and

an adjustable drive mechanism connecting the manufacturing system to the transfer system to rotate the transfer system with respect to the manufacturing system as the crank arm is

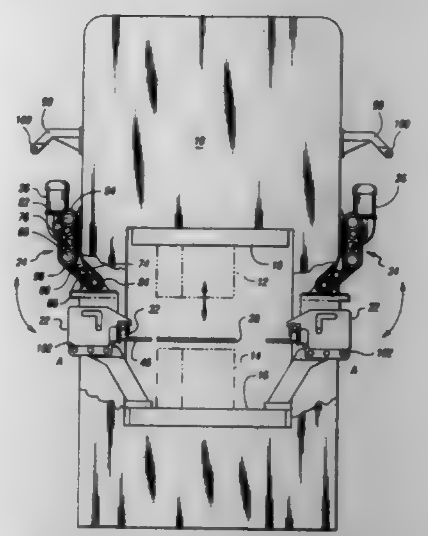

driven, wherein the drive mechanism allows selection of transfer system attitudes during movement based on desired operable and serviceable positions.

5,701,782

ROTARY PRESS

Filippo D. Padula, 1420 Balsam Way, Milford, Mich. 48381

Filed Dec. 11, 1996, Ser. No. 764,602

Int. Cl.⁶ B21J *9/19*

U.S. Cl. 72—452.4 **10 Claims**

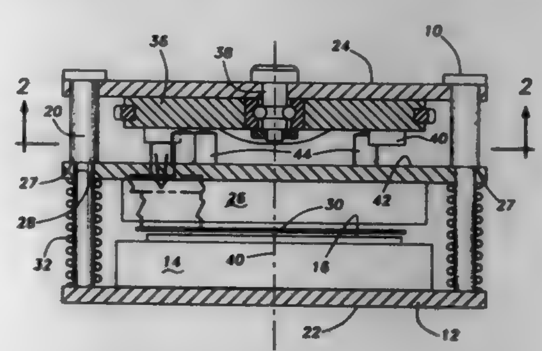

1. A press for stamping parts from a sheet of stock material comprising:

a frame,

a fixed platen secured against movement to said frame,

a movable platen,

means for movably mounting said movable platen to said frame so that said movable platen is movable between a retracted position in which said movable platen is spaced from said fixed platen by a distance sufficient to receive the sheet of stock material between said platens, and a closed position in which the stock material is sandwiched between said platens to form the part,

means for moving said movable platen between said retracted position and said closed position comprising

a plurality of cam followers secured to said movable platen on a side opposite from said movable platen,

a drive wheel rotatably secured to said frame about an axis parallel to an axis of movement of said movable platen adjacent said side of said movable platen,

a plurality of cams secured to said drive wheel at a position such that said cams engage said cam followers upon rotation of said drive wheel, and

means for rotatably driving said drive wheel.

5,701,783

SETTING ANGLE ADJUSTER FOR THE CAR HEADLAMP

Yu-Chu Lin, No. 477, Chung Shan N. Rd., Yung Kang City, Tainan Hsien, Taiwan

Filed Aug. 29, 1995, Ser. No. 520,833

Int. Cl.⁶ B60Q *1/068;* **F16H** *25/20*

U.S. Cl. 74—89.13 **1 Claim**

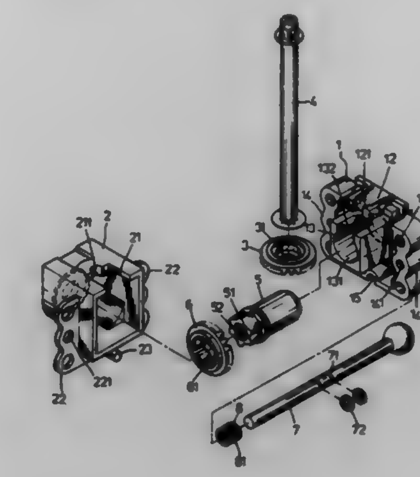

1. An adjuster for use in setting an angle of a car headlamp comprising:

an adjusting stand having a raised frame formed in an interior portion thereof and a fixture groove formed on a bottom side of said adjusting stand, said raised frame having a holding block formed on an upper end thereof, said holding block having a first half-round slot formed therein, said adjusting stand having a centrally located gear stand extending therefrom with a transverse holding bore formed therethrough, said gear stand having an opening formed on an upper side thereof in open communication with said transverse holding bore;

a casing having opposing upper and lower ends and an open cavity, said casing being coupled to said adjusting stand with said gear stand disposed within said cavity, said casing having an opening formed in said upper end adapted to receive said holding block therein and a fixture pin disposed on said lower end and extending therefrom for engagement with said fixture groove, said opening in said casing having a second half-round slot formed in an end thereof in correspondence with said first half-round slot to form a hole in open communication with said cavity when said holding block is received within said opening in said casing;

a first gear disposed in said cavity above said gear stand;

an operating rod drivingly coupled to said first gear for rotatable displacement thereof responsive to a rotative displacement of said operating rod, said operating rod extending from said coupling with said first gear through said hole formed by said first and second half-round slots;

a longitudinally extended sleeve member rotatably disposed within said transverse holding bore, said sleeve member having an internally threaded bore extending longitudinally therethrough;

a second gear meshingly engaged with said first gear and coupled to said sleeve member for rotation thereof responsive to rotation of said first gear;

an adjusting rod extending through said threaded bore of said sleeve member, said adjusting rod having a pair of spaced apart ring-shaped slots formed therein;

a slip ring member having external threads formed thereon and a through bore for receiving said adjusting rod therethrough, said slip ring member being positioned between said pair of spaced apart ring-shaped slots on said adjusting rod and threadedly engaged within said threaded bore of said sleeve member; and,

a pair of split collars respectively engaged to said adjusting rod within said pair of ring-shaped slots for retention of said slip ring therebetween, wherein said adjusting rod is linearly displaced for displacing a portion of the car headlamp responsive to rotation of said operating rod.

5,701,784

MECHANISM TO CONVERT ANGULAR RECIPROCAL MOVEMENTS INTO INTERMITTENT UNIDIRECTIONAL ROTARY MOVEMENT

Alvin A. Laplante, Boite 3607, Station: Bureau Chef, Tracadie, New Brunswick, Canada, E1X 1G5

Division of Ser. No. 506,009, Jul. 24, 1995, Pat. No. 5,620,232. This application Oct. 4, 1996, Ser. No. 725,462

Int. Cl.⁶ F16H *29/00;* **F16D** *41/066*

U.S. Cl. 74—126 **19 Claims**

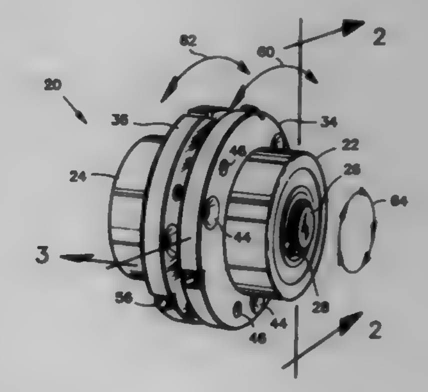

1. In combination;

a first member movable in a first reciprocal angular movement having a first direction and a second direction,

a second member movable in a second reciprocal angular movement, said first reciprocal angular movement and said second reciprocal angular movement being parallel and directionally opposite, and

an articulation between said first member and said second member, said articulation comprising a shaft and a mechanism to convert said first and said second angular reciprocal movements of said first member and said second member into an intermittent unidirectional rotary movement of said shaft, said mechanism comprising;

a pair of ball bearings having each an outer race :mounted in a fixed relationship with a respective said first member or said second member, and having each an inner race mounted in a fixed and coaxial relationship with said shaft,

a pair of flanges being each mounted adjacent and coaxial a respective said bearing and also in a fixed relationship with a respective said first member or said second member,

each of said flanges having one-way clutch means acting on said shaft in said first direction,

whereby a movement of either said first member or said second member in said first direction causes said flange fixed to said first member or to said second member moving in said first direction to clutch onto said shaft mad to rotate said shaft in said first direction,

and a movement of either said first member or said second member in a second direction causes said flange fixed to said first member or to said second member moving in said second direction to slide on said shaft, preventing thereby a movement of said shaft in said second direction.

5,701,785
DRIVING STRUCTURE OF THE EXTERNAL ROTARY DISK OF THE CRYSTAL BALL
Jack Lin, No. 3, Alley 202, Kao-Fon Rd., Hsin-Chu City, Taiwan
Filed Mar. 6, 1996, Ser. No. 611,669
Int. Cl.[6] F16H 1/20; F16D 11/16; F03G 1/08
U.S. Cl. 74—421 R 8 Claims

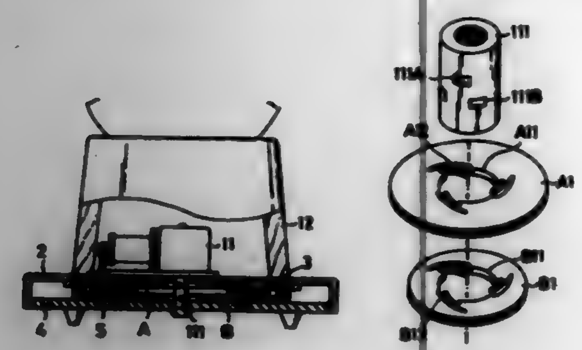

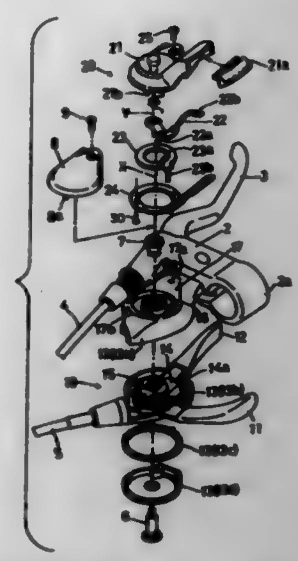

1. A driving mechanism, for a crystal ball, comprising:
a substrate,
a driving mechanism base,
a pedestal,
two sets of gears,
a spring axle, and
an external rotary disk
wherein a base of said crystal ball is supported by the substrate, and the substrate is supported above the driving mechanism base by the pedestal,
the two sets of gears are disposed between the driving mechanism base and the pedestal, and the pedestal and the substrate, respectively, and each of the two sets of gears include a center gear engaged with a driven gear, wherein the rotation center of each center gear is the spring axle and the rotation center of each driven gear is a positioning axle supported by the pedestal, each driven gear being engage with teeth defined circumferentially about an inner rim of the external rotary disk, and
the diameter the center gears for each of the two sets of gears are different, and each of the center gears and the spring axle are engaged such that relative rotation is permitted in a single direction.

5,701,786
SHIFTING DEVICE FOR A BICYCLE
Tatsuya Kawakami, Sakai, Japan, assignor to Shimano, Inc., Osaka, Japan
Continuation of Ser. No. 261,374, Jun. 16, 1994, abandoned. This application Mar. 19, 1996, Ser. No. 618,668
Claims priority, application Japan, Jun. 17, 1993, 5-032619 U
Int. Cl.[6] F16C 1/10; G05G 11/00
U.S. Cl. 74—502.2 10 Claims

1. A shifting apparatus comprising
a takeup element;
a shift lever for engaging and rotating said takeup element;
power takeoff means operable with rotation of said takeup element;
a speed indicator including:
a speed indicator case;
a support; and
indicating means disposed between said support and said indicator case and supported to said support to rotate about a first axis, said indicating means being connected to said power takeoff means for moving relative to said support in response to a rotation of said takeup element;
a shifter case for rotatably supporting said takeup element, said shifter case having a coupling section for externally mounting said speed indicator thereon;
a fastener for fastening said indicator case to said shifter case;
wherein said speed indicator includes fixing means for fixing said support to said indicator case so that said support remains fixed to said indicator case when said speed indicator is uncoupled from said shifter case;
wherein said takeup element rotates about a second axis; and
wherein said first and second axes are parallel to each other.

5,701,787
SHARPENING GUIDE FOR SNOWBOARDS AND ALPINE SKIS
Donald J. Brill, 1815 Gravers La., Wilmington, Del. 19810
Filed Mar. 29, 1996, Ser. No. 623,567
Int. Cl.[6] B23D 67/12; 69/02
U.S. Cl. 76—83 6 Claims

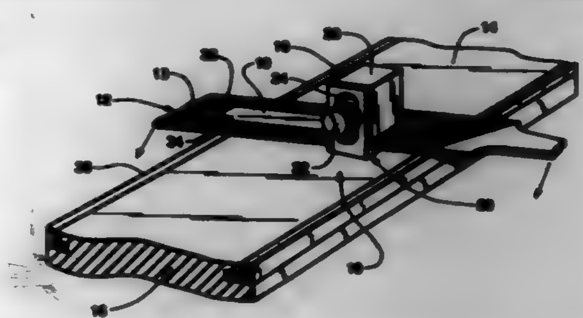

1. A sharpening guide for use with a cutting tool during the sharpening of a horizontal metal edge surface of an alpine ski or snowboard comprising:
an angular member comprising a horizontal base having an inner upper surface and an outer bottom surface and a generally vertical side wall having a vertically disposed through slot;
an elongated member demountably connected to the vertical side wall of the angular member comprising, a cube portion which engages an inner surface of said vertical side wall and has a centrally located and threaded hole perpendicular to the plane of the wall of the cube portion that engages said vertical side wall of said angular member, a tab extending from a base of said cube portion and a means to indicate a contact point between the cutting tool and the horizontal metal edge surface of the alpine ski,
a means for retaining the sharpening guide in a fixed relationship to said cutting tool,
wherein the inner upper surface of the horizontal base of said angular member locally supports said cutting tool and the elongated member rests on the top surface of said cutting tool.

5,701,788
RAZOR BLADE MANUFACTURE
Robert Wilson, Attleboro, Mass.; Laurence Robert Beesley, Essex, England, and Robert H. Flanagan, Watertown, Mass., assignors to The Gillette Company, Boston, Mass.
Filed Nov. 15, 1995, Ser. No. 559,796
Int. Cl.[6] B21K 11/00
U.S. Cl. 76—104.1 9 Claims

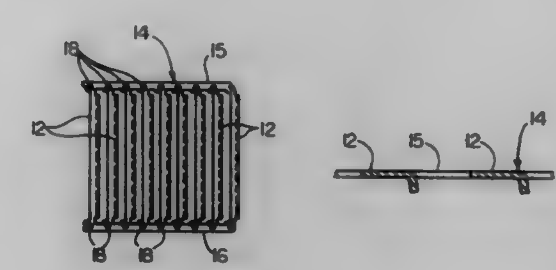

1. A method of manufacturing a plurality of razor blades each having a cutting edge portion affixed to an elongated support member, including the steps of:
providing an elongated strip of sheet material, said elongated strip being in the coiled condition and having opposite edge portions;
forming a plurality of discrete support members between said opposite edge portions at a first work station and rewinding said coiled strip with said support members retained between said opposite edge portions;
introducing said coiled strip at a second work station having means to feed said strip of material into said second work station;
employing said feed means to feed said strip of material along a path into said second work station;
severing each of said support members sequentially from between said opposite edge portions and;
removing each said support member from said second work station in a direction transverse to the path of said strip feed and transferring each said support member to a third work station for attachment to a cutting edge portion of a razor blade.

5,701,789
WASTE REPELLENT DIE STRUCTURE
Frank Okonski, Harwood Heights, Ill., assignor to Best Cutting Die Company, Skokie, Ill.
Filed Apr. 10, 1995, Ser. No. 419,185
Int. Cl.[6] B26D 7/18
U.S. Cl. 83—13 14 Claims

13. A method for removing scrap material from a flexible cutting die plate which is positioned on a rotary die holder cooperating with an anvil, said method comprising the steps of:
affixing the flexible cutting die plate to the rotary die holder, said flexible cutting die plate comprising an impression surface, said impression surface having a pattern surface area comprising bendable push pattern projections that are formed in and of said flexible die plate, such that said pop-up push patterns are bendable into being coplanar with said cutting die plate and biased away from the impression surface for repelling scrap material from said cutting die plate;

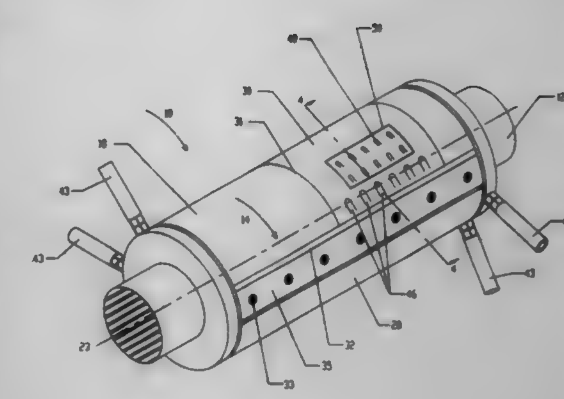

rotating the die holder thereby causing said bendable push pattern projections to bendably extend and push said scrap material from the flexible cutting die plate.

5,701,790
UPPER TOOL FOR A PRESS
Hiroshi Saito, Odawara, Japan, assignor to Amada Metrecs Company, Limited, Kanagawa, Japan
Continuation of Ser. No. 352,123, Dec. 1, 1994, Pat. No. 5,553,523, which is a continuation of Ser. No. 98,030, Jul. 28, 1993, Pat. No. 5,410,926. This application Apr. 5, 1996, Ser. No. 628,857
Int. Cl.[6] B26F 1/02
U.S. Cl. 83—140 4 Claims

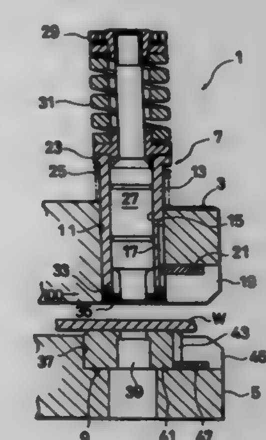

1. An upper tool for a punch press which includes an upper tool holding member, comprising:
a unitary punch guide adapted to be mounted on the upper tool holding member so as to be movable up and down, the punch guide having a lower end portion, the lower end portion having a lower surface, the punch guide is supported by the upper tool holding member through a first elastic member;
a shock damping member releasably fixed directly on the lower end portion of the unitary punch guide;
a stripper plate, for coming in contact with a workpiece and pushing the workpiece to strip the workpiece from the punch when the punch retracts, releasably fixed directly on the shock damping member, the stripper plate having an upper surface; and
an air gap between the lower surface and the upper surface, the air gap being dimensioned so that the air gap is equal to the maximum deformation of the damping member and the upper surface collides with the lower surface if the shock damping member is deformed excessively.

5,701,791

WORKPIECE PROCESSING MACHINE WITH RETRACTABLE CLAMPING DEVICE

Eckehart Schulze, Weissach, and Peter Bytow, Simmozheim, both of Germany, assignors to Trumpf GmbH & Co., Germany

Filed Sep. 21, 1995, Ser. No. 531,777

Claims priority, application Germany, Sep. 24, 1994, 94 15 514 U

Int. Cl.[6] B26D *7/02*

U.S. Cl. 83—277 **19 Claims**

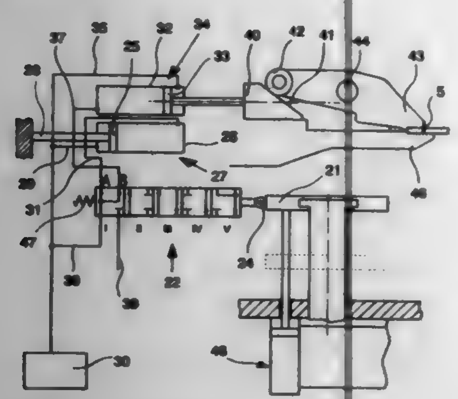

1. A machine tool comprising:
(a) a tool head for processing a workpiece;
(b) a workpiece guide assembly movable relative to said head;
(c) at least two holding devices on said guide assembly which are engageable with the workpiece, said holding devices being movable relative to said workpiece and relative to the workpiece guide assembly;
(d) drive devices each coupled to a respective one of said holding devices for effecting movement thereof relative to said tool head and said guide assembly;
(e) energy conduit means connected to each of said drive devices for connection to an energy source to effect operation of said drive devices to move said holding devices;
(f) each of said holding devices carrying a switching element for movement therewith; and
(g) a stationary stop positioned adjacent said tool head and cooperating with said switching elements, each of said switching elements having a switching slide which is supported on its associated holding device in a position wherein said switching slide is movable when said switching element abuts said stop, each of said switching slides in one position connecting the energy source to its associated drive device and in another position breaking said connection, each of said holding devices being movable into a position releasing the workpiece when its associated switching element abuts said stop and being movable relative to the workpiece and said tool head into a position at a safe distance from said tool head.

5,701,792

Patent Not Issued For This Number

5,701,793

METHOD AND APPARATUS FOR CONTROLLING AN IMPLEMENT OF A WORK MACHINE

Cynthia M. Gardner, North Aurora; Robert E. Stone, Germantown Hills; John D. Duffy; William E. Allen, both of Peoria, and James E. Schimpf, Plainfield, all of Ill., assignors to Catepillar Inc., Peoria, Ill.

Filed Jun. 24, 1996, Ser. No. 668,886

Int. Cl.[6] F15B *13/16*

U.S. Cl. 91—361 **14 Claims**

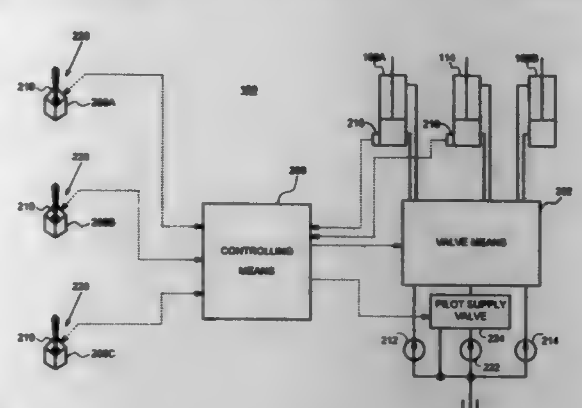

1. An apparatus for controllably moving a work implement of an earth moving machine, the work implement including a boom and a bucket being attached thereto, the work implement including a plurality of work functions that includes a lifting and lowering function where the boom is actuated by a hydraulic lift cylinder and dumping and racking function where the bucket is pivoted by a hydraulic tilt cylinder, comprising:
an operator controlled joystick;

joystick position sensing means for sensing the position of the joystick and responsively generating an operator command signal;
implement position sensing means for sensing the elevational position of the boom and the pivotal position of the bucket, and responsively producing respective implement position signals;
memory means for storing a look-up table for each work function, the look-up tables including a plurality of values corresponding to a plurality of work implement positions;
controlling means for receiving the implement position and operator command signals, determining the instant position of the work implement and the corresponding work function, modifying the operator command signal based on the instant work function, and producing an electrical valve signal in response to the modified operator command signal; and
valve means for receiving the electrical valve signal, and controllably providing hydraulic fluid flow to the respective hydraulic cylinders in response to a magnitude of the electrical valve signal.

5,701,794

BRAKE BOOSTER PROVIDED WITH A NOISE SHIELDING MEMBER

Hang-Byong Cha, Pyungtaek-shi, Rep. of Korea, assignor to Mando Machinery Corp., Kyunggi-Do, Rep. of Korea

Filed Aug. 20, 1996, Ser. No. 699,742

Claims priority, application Rep. of Korea, Dec. 19, 1995, 95-52058

Int. Cl.[6] F15B *9/10*

U.S. Cl. 91—376 R **4 Claims**

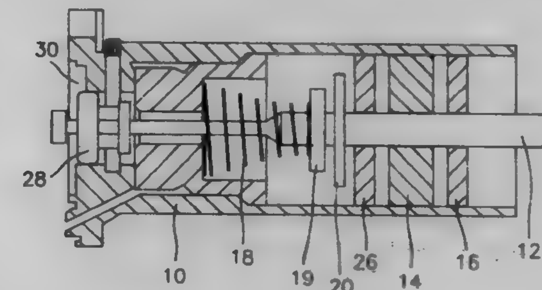

1. A brake booster comprising:
a valve housing;
an input rod movably mounted in the valve housing;
an air valve mounted in the valve housing, the air valve being opened by the input rod;
a main filter fixed on the input rod;
a noise absorbing member fixed on the input rod;
a spring seat fixed on the input rod;
a return spring for biasing the input rod, the return spring contacting the spring seat; and
a noise shielding member fixed on the input rod, the noise shielding member spaced apart from the noise absorbing member toward the air valve, wherein the main filter, the noise absorbing member, the spring seat, the noise shielding member move integrally with the input rod.

5,701,795

HYDRAULIC SYSTEM

Welm Friedrichsen, Nordborg, Denmark, assignor to Danfoss A/S, Nordborg, Denmark

PCT No. PCT/DK93/00390, § 371 Date Jun. 6, 1995, § 102(e) Date Jun. 6, 1995, PCT Pub. No. WO94/13958, PCT Pub. Date Jun. 23, 1994

PCT Filed Nov. 30, 1993, Ser. No. 464,688

Claims priority, application Germany, Dec. 11, 1992, 42 41 846.1

Int. Cl.[6] F15B *11/08*

U.S. Cl. 91—446 **30 Claims**

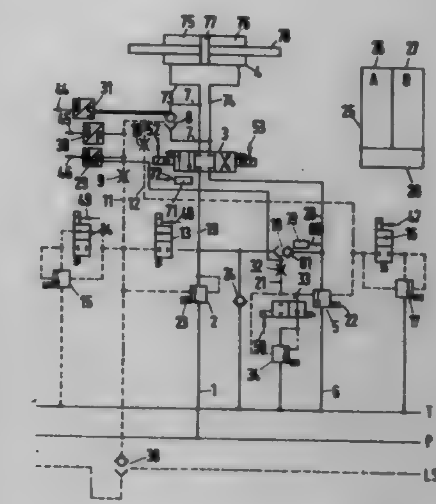

1. A hydraulic system having a pressure source, a pressure sink, a work motor, a main valve arranged between the pressure source and the pressure sink on the one hand and the work motor on the other hand and connected to the work motor by way of work connections, an input compensating valve located between the pressure source and main valve, and an additional outlet compensating valve located between the main valve and the pressure sink to control volume flow from the main valve to the pressure sink, in which at least one of the compensating valves is controlled by means of a load sensing signal deduced from a pressure in the work connections, the outlet compensating valve having a degree of opening controllable externally by a control arrangement, said control arrangement having at least one sensor for determining if load on the work motor is a positive or negative load, said control arrangement having means for controlling the load sensing signal for influencing the degree of opening of the outlet compensating valve depending on said positive or negative load.

5,701,796

HYDRAULIC APPARATUS FOR TRAVELING

Toshiro Takano, and Mitsumasa Akashi, both of Tochigi-ken, Japan, assignors to Komatsu Ltd., Tokyo, Japan

PCT No. PCT/JP95/00317, § 371 Date Aug. 14, 1996, § 102(e) Date Aug. 14, 1996, PCT Pub. No. WO95/23260, PCT Pub. Date Aug. 31, 1995

PCT Filed Feb. 28, 1995, Ser. No. 687,444

Claims priority, application Japan, Feb. 28, 1994, 6-028713

Int. Cl.[6] F15B *11/00*

U.S. Cl. 91—512 **5 Claims**

1. A hydraulic apparatus for traveling comprising:
a left direction switching valve formed by forming a spool bore having a pump port, an actuator port and a return port in a first valve block, and by disposing a spool within said spool bore for establishing and blocking communication of respective of said ports to another of said ports;
a right direction switching valve formed by forming a spool bore having a pump port, an actuator port and a return port in a second valve block, and by disposing a spool within said

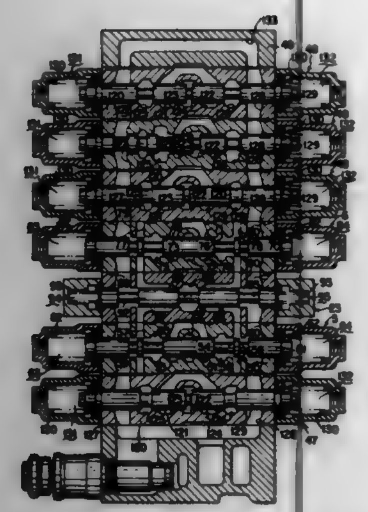

spool bore for establishing and blocking communication of respective of said ports to another of said ports;
a switching valve formed by forming a spool bore having a primary port and a drain port in a third valve block, and by disposing a spool within said spool bore for establishing and blocking communication between respective of said ports and another of said ports; and
said first and second valve blocks being respectively connected with said third valve block to communicate respective of said return ports and said drain port.

5,701,797
SEALING SYSTEM
Frank Mohn, London, United Kingdom, assignor to Framo Engineering AS, Nesttun, Norway
PCT No. PCT/GB94/00779, § 371 Date Nov. 29, 1995, § 102(e) Date Nov. 29, 1995, PCT Pub. No. WO94/24468, PCT Pub. Date Oct. 27, 1994
PCT Filed Apr. 13, 1994, Ser. No. 532,652
Claims priority, application United Kingdom, Apr. 15, 1993, 93 07775
Int. Cl.⁶ F15B *21/04*
U.S. Cl. 92—80 **23 Claims**

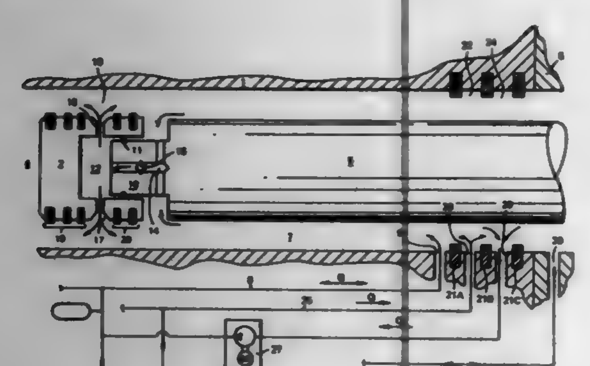

1. A sealing system for a piston pump comprising a piston rod (5) extending into a cylinder (1) from a motor housing (6), the motor housing containing drive means for reciprocably driving the piston rod, and the cylinder having a piston (2) reciprocable there within, the sealing system comprising a first seal means (19, 20) between the piston and the cylinder for separating a first fluid to be pumped by the piston from a second fluid around the piston rod, and second seal means (21A, 21B, 21C) between the piston rod and the cylinder separating the second fluid from a third fluid in the motor housing, wherein the second seal means comprises a first seal ring (21A), a second seal ring (21B) spaced from the first seal ring on the side thereof remote from the first seal means to define between the seal rings a first chamber (22), a third seal ring (216) spaced from second seal ring on the side thereof remote from the second seal ring to define a second chamber (27) between the second and third seal rings, means (25) for supplying a fourth fluid to the first chamber, and means (27) for maintaining a lower pressure within the second chamber than in the first.

5,701,798
LINEAR ACTUATING DEVICE
Mitsuo Noda, Ichinomiya, Japan, assignor to Howa Machinery, Ltd., Japan
Filed Dec. 23, 1996, Ser. No. 771,661
Claims priority, application Japan, Dec. 27, 1995, 7-353897
Int. Cl.⁶ F01B *29/00*
U.S. Cl. 92—88 **14 Claims**

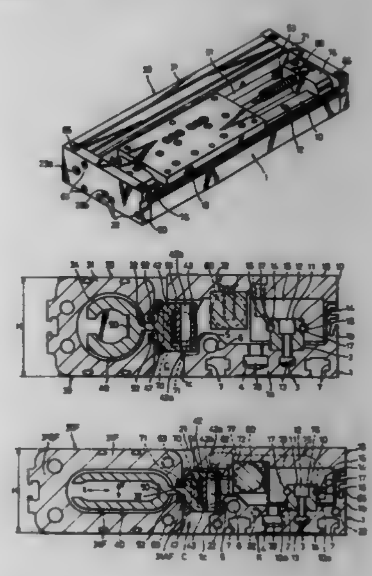

1. A linear actuating device comprising:
a rodless power cylinder unit including a cylinder barrel;
a longitudinal base rigidly coupled to the cylinder barrel, said base having a width in the direction perpendicular to the axis of said cylinder barrel of the rodless power cylinder;
a guide rail mounted on the top face of the base and extending in parallel with the axis of the cylinder barrel, said guide rail capable of bearing both vertical and horizontal forces;
a carriage disposed on the cylinder barrel and movable along the axis of the cylinder barrel;
a slide table having an upper face and lower face disposed in parallel with said base, said slide table being coupled with and driven by said carriage and movable along said guide rail;
wherein said carriage and said slide table are disposed on the side of cylinder barrel facing said guide rail.

5,701,799
PLURAL ROTARY ACTUATORS
Rune Granberg, Älvsjö , Sweden, assignor to AB Rexroth Mecman, Stockholm, Sweden
Filed Mar. 28, 1996, Ser. No. 625,806
Claims priority, application Sweden, Mar. 31, 1995, 9501186
Int. Cl.⁶ F01C *9/00*
U.S. Cl. 92—125 **7 Claims**

1. Rotary actuator (1) comprising a housing (2) having end walls, said housing defining a working chamber (3) for actuation with a pressure fluid, the working chamber having an at least partially circular section bounded by an inner wall (4), sides and two end positions, a pivoting piston (5) having an axis (X), the piston being arranged sealingly against the inner wall (4) of and

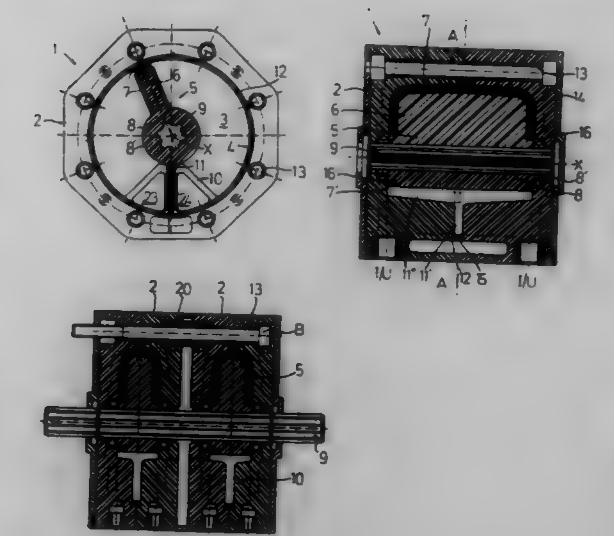

pivotable between the two end positions of the working chamber, characterized in that the pivoting piston (5) being pivotally supported in bearings (16) which are arranged in the housing (2) axially at each said side of the working chamber (3), the piston comprising means for cooperation with an external rotary shaft, whereby the housing (2) on at least one of its end walls is adapted so as to be contacted against and be fixedly fastened to a corresponding end wall of a second rotary actuator housing (2), and whereby these housings are fixable to one another in such a way that the axes (X) of the pivoting pistons of the respective housings are coaxial and that the pivoting pistons thereby are capable of affecting a common outgoing shaft, each housing (2) being divided through its working chamber (3) perpendicular to its axis (X) into housing parts, the housing parts being fixed together by tubular rivets (13) having rivet axes parallel with said axis (X), said rivets having through holes inside the tubular rivets (13) for receiving fastening means for mutual fastening of the housing, said tubular rivets (13) being distributed around and outside the working chambers in such a way that to allow the housings to be fastened together.

5,701,800
PRESSURE MEDIUM DRIVE WITH A CYLINDER AND A PLUNGER
Otmar Kaup, Aschaffenburg, Germany, assignor to Kaup GmbH & Co. KG, Aschaffenburg, Germany
Filed Jan. 17, 1997, Ser. No. 786,097
Claims priority, application Germany, Jan. 25, 1996, 196 02 553.2
Int. Cl.⁶ F16J *15/18*
U.S. Cl. 92—128 **6 Claims**

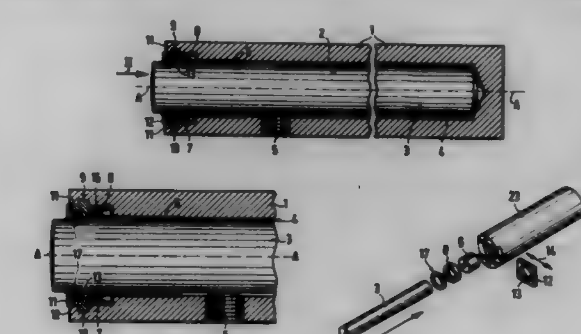

1. Pressure medium drive comprising
a housing with a cylindrical chamber having a central axis, said housing having an end at which said cylindrical chamber opens, a stepped bore concentric to said central axis, and a pair of grooves extending transversely of said axis on opposite sides of said cylindrical chamber at said end of said housing,
a sealing ring received in said stepped bore,
a support slideably received in said grooves to hold said sealing ring in said stepped bore, said support having a through-hole which aligns with said cylindrical chamber and said sealing ring, and
a plunger slideably received in said through-hole, said sealing ring, and said cylindrical chamber, thereby holding said support in place against movement in said grooves transversely of said axis.

5,701,801
MECHANICALLY REDUNDANT ACTUATOR ASSEMBLY
Wilfred E. Boehringer, Fullerton; Teunes Verhoeven, and William V. Hutz, both of Long Beach, all of Calif., assignors to McDonnell Douglas Corporation, Huntington Beach, Calif.
Filed Oct. 18, 1995, Ser. No. 544,952
Int. Cl.⁶ F16J *15/18*
U.S. Cl. 92—166 **18 Claims**

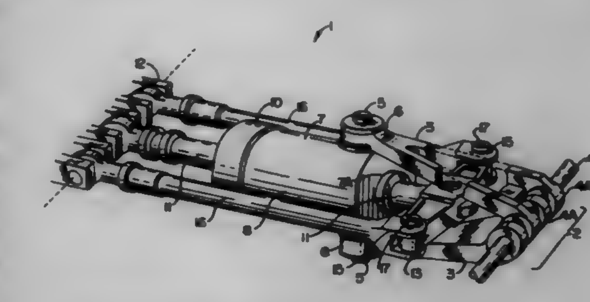

1. A mechanically redundant actuator comprising:
a. at least one actuator body, having an elongated channel along at least one axis of said body,
b. a piston received by said channel, said piston longitudinally displaceable along the longitudinal axis of said channel in said actuator body,
c. a connector attaching said actuator body to an anchor point,
d. a piston rod attached to said piston of greater length than said channel and disposed substantially parallel to the longitudinal axis of said channel,
e. a connector attaching one end of said piston rod to a movable surface,
f. a cross bar connected to the end of said piston rod opposite said movable surface,
g. a plurality of tie rods rotatably connected at one end to said cross bar, and
h. a connector attaching said plurality of tie rods, at an end opposite said cross bar, to said movable surface.

5,701,802
MULTIPART PISTON FOR AN INTERNAL COMBUSTION ENGINE
Klaus Junge, Burscheid, Germany, assignor to AE Goetze GmbH, Burscheid, Germany
Filed Nov. 5, 1996, Ser. No. 743,823
Claims priority, application Germany, Nov. 21, 1995, 195 43 359.9
Int. Cl.⁶ F16J *1/14*
U.S. Cl. 92—190 **7 Claims**

1. An engine piston comprising
(a) a piston head;
(b) a first bearing block forming a one-piece component with said piston head and having a first bearing face;
(c) a piston skirt being a component separate from said piston head;

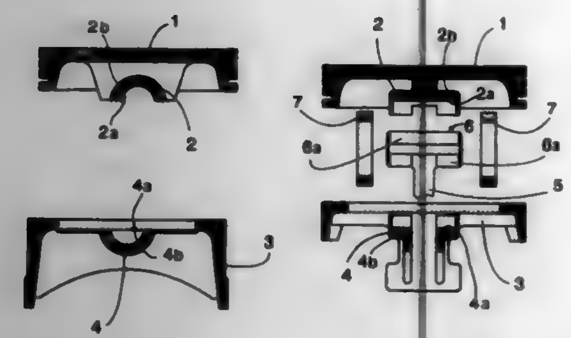

(d) a second bearing block forming a one-piece component with said piston skirt and having a second bearing face; and
(e) coupling means for interconnecting said piston head and said piston skirt to provide for a relative motion between said piston head and said piston skirt and for interconnecting said first and second bearing blocks with one another; said first and second bearing faces complementing one another to form a bearing for rotatably supporting a connecting rod.

5,701,803
LIGHT-METAL PISTON FOR INTERNAL COMBUSTION ENGINES
Martin Lutz, Remshalden, Germany, assignor to Mahle GmbH, Stuttgart, Germany
PCT No. PCT/DE95/00370, § 371 Date Oct. 16, 1996, § 102(e) Date Oct. 16, 1996, PCT Pub. No. WO95/29332, PCT Pub. Date Nov. 2, 1995
PCT Filed Mar. 16, 1995, Ser. No. 737,252
Claims priority, application Germany, Apr. 27, 1994, 44 14 670.7
Int. Cl.[6] F16J *1/04*
U.S. Cl. 92—208 **4 Claims**

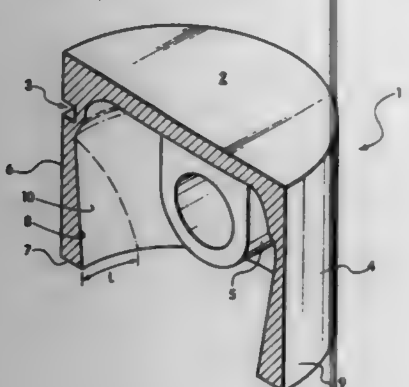

1. A light metal piston for internal combustion engines, comprising:
a piston crown;
a piston bottom;
a piston ring groove part; and
a piston skirt, said piston bottom, said piston ring groove part and said piston skirt being integrally shaped in one piece, said piston skirt having a wall, a bottom edge, a height, an inside contour, a circumference, a pressure side and a counterpressure side,
wherein the wall forms a thickening only in the area around at least one of the pressure and counterpressure sides, and wherein the thickness of the wall substantially continually decreases, starting from the bottom edge of the skirt along the height of the skirt, such that the inside contour of the skirt extends substantially conically.

5,701,804
LOW TEMPERATURE CLAMSHELL COOKING AND STAGING GRILL APPARATUS AND PATHOGENIC RISK MANAGEMENT PROCESS
Benno E. Liebermann, 2805 Lime Kiln La., Louisville, Ky. 40222
Continuation-in-part of Ser. No. 519,831, Aug. 25, 1995, Pat. No. 5,570,625. This application Aug. 23, 1996, Ser. No. 697,369
Int. Cl.[6] A47J *37/00*
U.S. Cl. 99—330 **20 Claims**

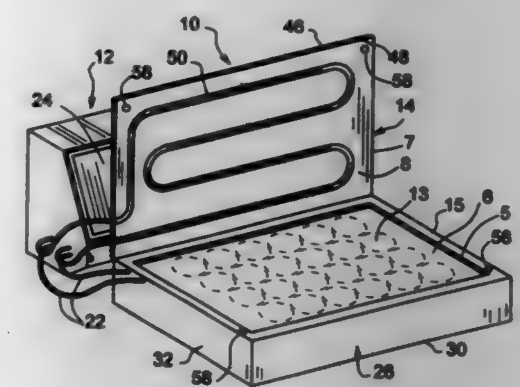

1. A low temperature clamshell cook and staging grill for transferring heat to food articles, comprising:
a housing frame;
a top cover plate having at least a bottom heating surface pivotally secured to said housing frame by a floating hinge and a bottom base plate having a top heating surface secured to said housing frame, said top cover plate and said base plate comprising a first sheet and a second sheet of heat transfer material bonded together having fluid heat transfer passages thereinbetween for recirculation of a heat transfer fluid;
means for connectively mounting said plates in hinged alignment with one another and to said housing;
a reservoir in fluid communication containing a heat transfer fluid in fluid communication with said top cover plate and said base plate;
means for heating said heat transfer fluid to a selected temperature in said reservoir;
means for sensing the temperature of said top cover plate and said base plate;
means for controlling the temperature of said heat transfer fluid within said reservoir at a selected temperature;
means for recirculating said heat transfer fluid through said plates in fluid-connection with said reservoir, said top cover plate, and said base plate, and
at least one food article sealed within at least one heat conducting container disposed between said top cover plate and said base plate.

5,701,805
STEAM PRESSURE RICE COOKER WITH AN AUXILIARY STEAM PRESSURE EXHAUSTING DEVICE
Young-Jae Sa, Seoul, Rep. of Korea, assignor to Daewoo Electronics Co., Ltd., Rep. of Korea
Filed Feb. 28, 1997, Ser. No. 807,917
Claims priority, application Rep. of Korea, Feb. 28, 1996, 96-5146
Int. Cl.[6] A23L *1/00;* **A47J** *27/00;* **F27D** *11/02*
U.S. Cl. 99—331 **20 Claims**

1. A steam pressure rice cooker comprising:
a first container for containing a desired quantity of water and rice to be cooked;

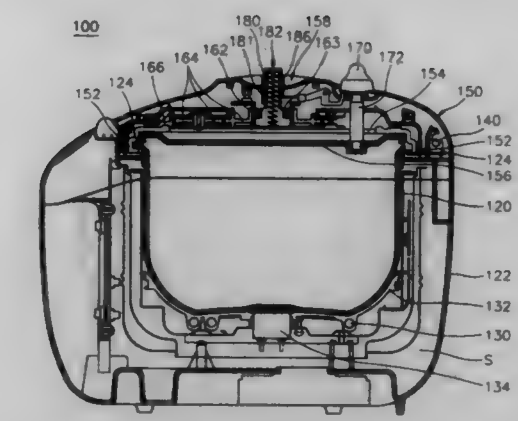

a second container for enclosing and supporting said first container;
a lid for opening or shutting an upper portion of said first container, said lid including a cover for tightly shutting the upper portion of said first container, a rotating plate for automatically opening or shutting said cover by receiving a driving force from an outer power source, a handle for generating the driving force sequentially to operate said rotating plate, and a driving force transmitting means for transmitting the driving force from said handle to said rotating plate;
a heater for heating said first container, said heater being disposed in a space between said first container and said second container;
a temperature sensing sensor for sensing a temperature of said first container;
a weight for exhausting a steam pressure which is generated in said first container during the operation of said steam pressure rice cooker to an outside of said steam pressure rice cooker, and
an auxiliary steam pressure exhausting device for completely exhausting a steam pressure which remains within said first container immediately after cooking of the rice to the outside of said steam pressure rice cooker, said auxiliary steam pressure exhausting device being disposed between said handle and said weight within said lid.

5,701,806
INSTALLATION FOR THE PREPARATION OF BREAD DOUGH PORTIONS
Eulalia Puig Martinez, c/550 No. 36, 46184 La Cañada (Valencia), Spain
Filed Aug. 28, 1996, Ser. No. 704,365
Claims priority, application Spain, Oct. 31, 1995, 9502116
Int. Cl.[6] A23P *1/00;* **A21B** *1/00;* **A21C** *5/00;* **A21D** *6/00*
U.S. Cl. 99—353 **17 Claims**

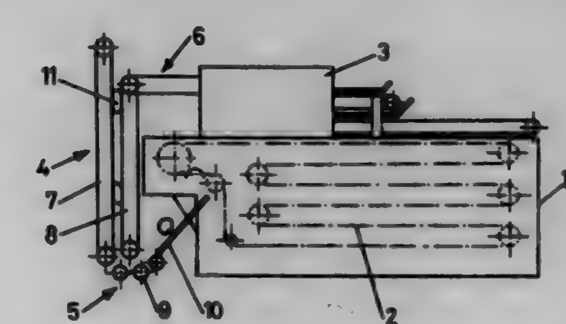

1. An installation for the preparation of bread dough portions, comprising:
a bread dough portion pre-fermentation chamber having an outlet opening for dispensing bread dough portions;
a bread dough stick forming machine having an inlet opening for receiving the bread dough portions, said forming machine being disposed on said pre-fermentation chamber;
a conveyance mechanism that conveys the bread dough portions from the outlet opening of the chamber to the inlet of the forming machine, the mechanism including a bread dough portion lifting device that has a first end below the chamber outlet opening and a second end approximately at the height of the inlet opening of the forming machine, a lower conveyor conveys the bread dough portions from the outlet opening of the chamber to the first end of the lifting device, and an upper conveyor that has a first end adjacent to the second end of the lifting device and has a second end adjacent to the inlet opening of the forming machine, wherein the lifting device comprises at least one of conveyor belts and a vertical scoop chain.

5,701,807
FRYING PAN HAVING COOKING OIL SUPPLY DEVICE
Dong-Gyun Park, 560-6, Koyo-dong, Songpa-ku, Seoul, Rep. of Korea
Filed Oct. 1, 1996, Ser. No. 724,648
Claims priority, application Rep. of Korea, Oct. 6, 1995, 1995-28024
Int. Cl.[6] A47J *27/00*
U.S. Cl. 99—422 **8 Claims**

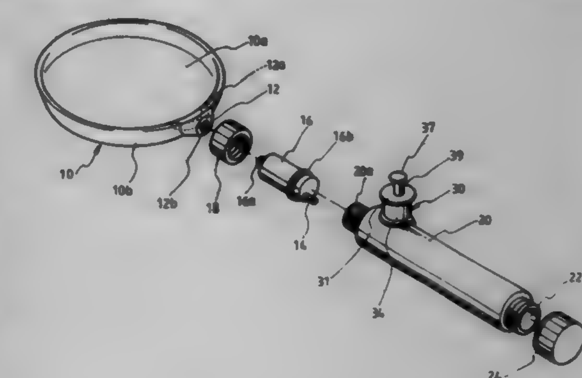

1. A frying pan having a cooking oil supplying device, comprising:
a main body of the frying pan for cooking foods;
a wall portion defined by said main body, said wall portion having a coupling portion;
a heat insulating member coupled with said coupling portion, for blocking a thermal conduction from a bottom of said main body;
a cooking oil storing device coupled to an end of said heat insulating member, for storing a cooking oil and for serving as a handle; and
a coupling means for coupling said heat insulating member and said cooking oil storing device together in an air-tight state.

5,701,808
METHOD AND APPARATUS FOR PRESSURE PROCESSING A PUMPABLE FOOD SUBSTANCE
Bruce M. Schumann, and Edmund Y. Ting, both of Kent, Wash., assignors to Flow International Corporation, Kent, Wash.
Filed Jan. 23, 1996, Ser. No. 590,297
Int. Cl.^{6} A23L *1/00;3/015*
U.S. Cl. 99—453 18 Claims

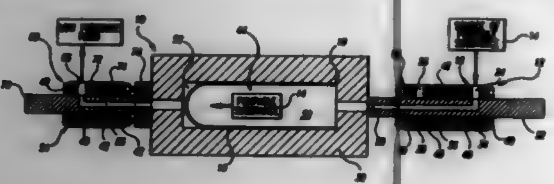

1. Apparatus for pressure processing a pumpable food substance, comprising:
a source of a pumpable food substance;
a pressure vessel;
means for pressurizing and depressurizing the pumpable food substance while it is in the pressure vessel; and
a valve that is movable to a first, second and third position, the valve having an inlet port coupled to the source of the pumpable food substance, and an outlet port, such that when the valve is moved to the first position, the inlet port is aligned with a passageway that is open to the pressure vessel and a volume of the pumpable food substance may flow into the pressure vessel via the inlet port and the passageway, when the valve is moved to the second position, the passageway is sealed and the pumpable food substance is pressurized to a selected pressure for a selected period of time after which it is depressurized, and when the valve is moved to the third position, the outlet port is aligned with the passageway, thereby allowing the pumpable food substance to be discharged from the pressure vessel.

5,701,809
PLANT FOR CONTINUOUSLY PROCESSING CHEESE MASS
Per Dusk, Silkeborg, Denmark, assignor to APV Pasilac A/S, Aarhus C, Denmark
PCT No. PCT/DK94/00359, § 371 Date Apr. 1, 1996, § 102(e) Date Apr. 1, 1996, PCT Pub. No. WO95/09527, PCT Pub. Date Apr. 13, 1995
PCT Filed Sep. 27, 1994, Ser. No. 624,421
Claims priority, application Denmark, Oct. 1, 1993, 1105/93
Int. Cl.^{6} A23C *19/02;19/064;19/072;* A01J *11/00*
U.S. Cl. 99—459 5 Claims

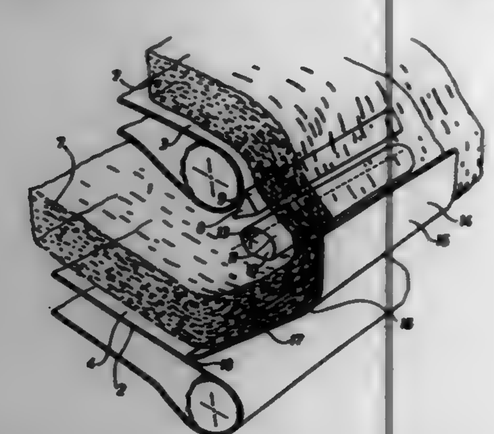

1. An apparatus for continuously processing cheese mass, comprising:
a first substantially horizontal conveyor having an exit end which conveys the cheese mass in one direction;
a second substantially horizontal conveyor which conveys the cheese mass in an opposite direction;
a fixed rod comprising a guide surface;
an adjustable rod comprising a guide surface; and
a guide plate,
said second conveyor being positioned below the first conveyor, wherein the guide surfaces of the fixed rod and adjustable rod are positioned to receive the cheese mass from the exit end of the first conveyor and to support the cheese mass in a downwardly inclining path towards the guide plate which receives the cheese mass therefrom and carries the cheese mass obliquely downwards onto the second conveyor.

5,701,810
TOFU MAKING APPARATUS
Gary T. Nakai, P.O. Box 461, Madison, Wis. 53701-0461
Filed Nov. 15, 1995, Ser. No. 559,421
Int. Cl.^{6} A23C *3/02;* A23J *1/00;* A23L *1/20;* A47J *19/00*
U.S. Cl. 99—495 25 Claims

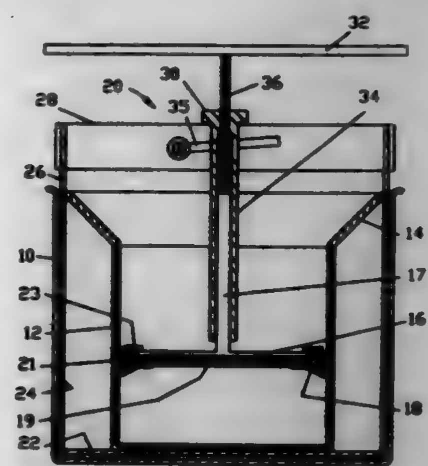

1. An apparatus for extracting soy milk from soybean go, comprising:
an enclosure having side walls;
a filter insertable into and removable from said enclosure, said filter having sides with a dimension smaller than an inner dimension of the side walls of said enclosure to form a gap between the sides of said filter and the side walls of said enclosure when said filter is inserted into said enclosure, said filter for receiving the soybean go;
a pressing member extending between the sides of said filter and movable within said filter; and
an elastomeric seal between said pressing member and said filter.

5,701,811
DIE PROTECTION APPARATUS FOR A HYDRAULIC PRESS
Hideaki Kawakami, Komatsu, Japan, assignor to Komatsu Ltd., and Komatsu Industries Corporation, both of Tokyo, Japan
PCT No. PCT/JP95/02595, § 371 Date Aug. 1, 1996, § 102(e) Date Aug. 1, 1996, PCT Pub. No. WO96/19341, PCT Pub. Date Jun. 27, 1996
PCT Filed Dec. 18, 1995, Ser. No. 693,200
Claims priority, application Japan, Dec. 21, 1994, 6-318062
Int. Cl.^{6} B30B *15/28*
U.S. Cl. 100—50 9 Claims

1. A die protection apparatus for a hydraulic press in which a slide is moved up and down by a hydraulic cylinder, the apparatus comprising:

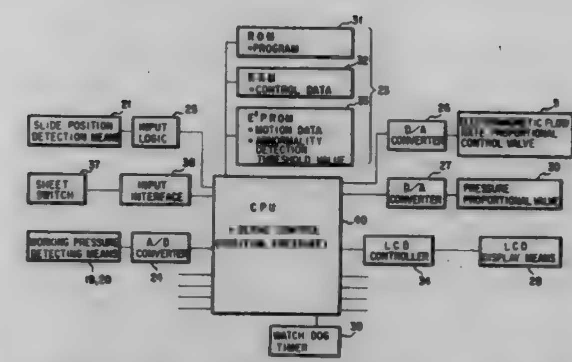

a slide position detection means for detecting a position of said slide;
a pressure detection means for detecting a pressure that is applied to said slide;
a setting means for setting a threshold value of said applied pressure and a predetermined position of said slide which are required to form a workpiece in accordance with a die used; and
an emergency stop means which, if a working pressure develops that exceeds said threshold value at any position in a workpiece forming zone, is so operative as to determine said working pressure to be abnormal, thereby emergency stopping said slide.

5,701,812
DEVICE FOR SCRAPPING CARS
Franciscus Laurentius Maria Theresia Van Den Mosselaar, Dongen; Gerrit Johannus Termaten, Lochem, and Leonardus Theodorus Maria Reuser, Ede, all of Netherlands, assignors to Car Recycling Systems "CRS" B.V., Ede, Netherlands
Filed Apr. 12, 1996, Ser. No. 631,183
Int. Cl.^{6} B30B *9/32*
U.S. Cl. 100—91 16 Claims

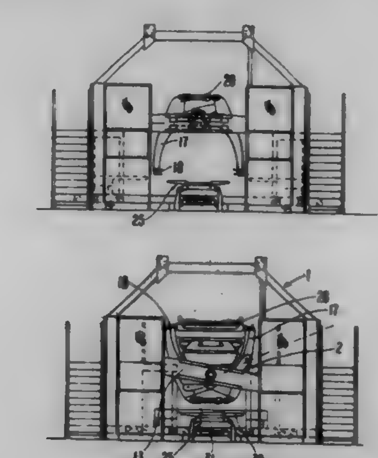

1. A device for scrapping cars, said device comprising:
a plurality of stations;
conveyor trolleys guiding a car through the plurality of stations and stopping at least one station;
wherein at least one of the stations includes a turning device raising a car and rotating the car about its longitudinal axis such that a bottom of the car becomes accessible from above, the turning device comprising:
a framework;
a bridge pivotally mounted on the framework such that the bridge is rotatable about its longitudinal axis;
a bridge rotating and vertical adjusting mechanism adjusting and rotating the bridge in a vertical direction;
at least one supporting member having a first leg and a second leg, the first and second legs being rotatably supported on the bridge at first ends of the legs;
a pair of clamping bars having clamping members, the clamping bars being connected to the at least one supporting member such that the clamping bars can be pushed toward and away from each other; and
a leg pivoting mechanism pivoting the first and second legs such that the clamping bars can be moved toward and away from each other.

13. A device according to claim 1, further comprising a press mounted at an end of the conveyor track, the press pressing flat a remaining part of the car.

5,701,813
PET DOOR FOR SCREEN APPLICATIONS
John Michael Smith, HCOI Box 339, Cleveland, Tex. 77327-8004
Filed Mar. 1, 1996, Ser. No. 609,839
Int. Cl.^{6} E06B *7/28*
U.S. Cl. 160—180 3 Claims

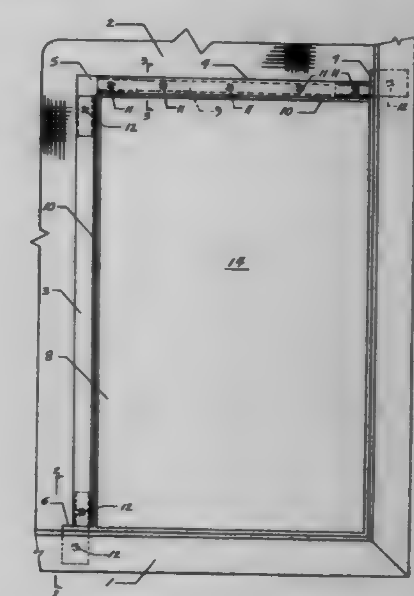

1. In combination with a screen and screen frame in a given plane, said frame having a bottom and an intersecting side, the perimeter of said screen being attached to said frame forming a corner of a generally rectangular screened enclosure, a pet door for screen applications comprising:
a cut-out portion in said screen defining an opening, said opening having a top and a side defined by said screen and a side and a bottom defined by said frame, said opening being generally rectangular in shape;
a horizontal framing member having a length substantially equal to said top of said opening and having a spline groove, said screen at the top of said opening defined by said screen being attached to said horizontal framing member by spline material;
a vertical framing member having a length substantially equal to said side of said opening defined by said screen and having a spline groove, said screen at the side of said opening defined by said screen being attached to said vertical framing member by spline material;
a corner bracket joining said horizontal framing member to said vertical framing member at the intersection of the top and side of said opening defined by said screen;
an upper mounting bracket joined to said horizontal framing member and attached to said frame at the side of said opening defined by said frame;

a lower mounting bracket joined to said vertical framing member and attached to said frame at the bottom of said opening defined by said frame; and
a flexible flap and mounting plate joined to said horizontal framing member only, said flap being aligned between said mounting plate and said horizontal framing member, said flap being nearly equal in size to said opening, said flap being moveable pivoting about an axis at said horizontal framing member permitting the passage of a pet through said opening.

5,701,814
HYDRAULIC PRESS ASSEMBLY
Robert Herpst, 11 Trotters La., Mahwah, N.J. 07430, and Ruben A. Diaz, Edgewater, N.J., assignors to Robert Herpst, Mahwah, N.J.
Filed Aug. 2, 1996, Ser. No. 692,000
Int. Cl.^{6} B30B *1/32*
U.S. Cl. 100—269.15 **9 Claims**

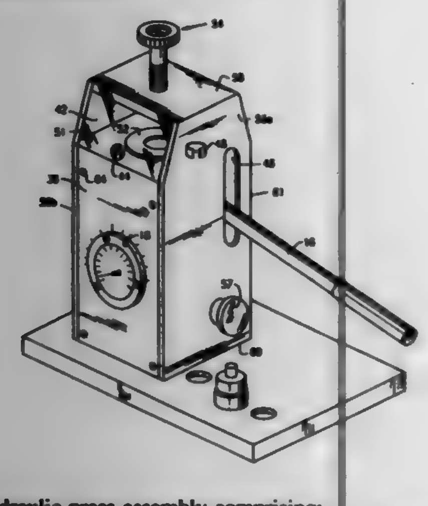

1. A hydraulic press assembly comprising:
a) hydraulic pump means for generating an upwardly directed pressure on a platform;
b) a platform for receiving a substance to be compressed; and
c) a housing containing at least a portion of said hydraulic pump means and said platform, which together form a load beating assembly, said housing comprising at least four sides including a top side, a bottom side and a pair of opposed sides with at least three of the sides formed from a rectangular solid having a hollow core.

5,701,815
METHOD OF PRINTING A COLOR FILTER
Peter L. Bocko, Painted Post, N.Y.; Bernard A. Eid, Champagne/Seine, France; Ronald E. Johnson, Tioga, Pa.; William E. Lock, Horseheads; Robert D. Shoup, Hammonsport, both of N.Y., and Jean-Pierre Themont, Montigny Sur Loing, France, assignors to Corning Incorporated, Corning, N.Y.
Continuation of Ser. No. 197,141, Feb. 16, 1994, Pat. No. 5,544,582, which is a continuation-in-part of Ser. No. 145,155, Nov. 3, 1993, Pat. No. 5,535,673, and Ser. No. 145,244, Nov. 3, 1993, Pat. No. 5,533,447. This application Jan. 25, 1996, Ser. No. 599,503
Int. Cl.^{6} B41M *1/20;1/34*
U.S. Cl. 101—211 **26 Claims**

26. A method of making a color filter for a flat panel display comprising:
contacting a collector device with a plurality of pattern plates seriatim, each pattern plate having a different radiation curable colored ink thereon, to deposit a multicolored ink pattern on said collector device;

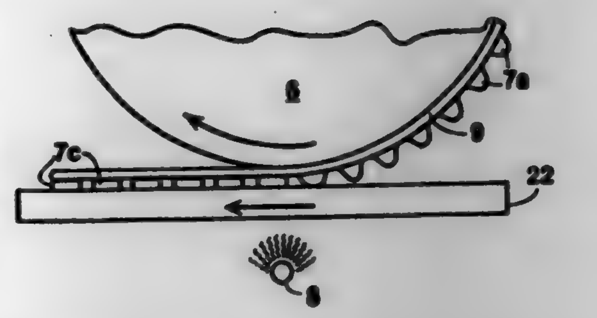

transferring said multicolored ink pattern onto a substrate in a single deposition step to form a color filter array; and
curing said multicolored ink pattern during or after said transferring step to form a color filter.

5,701,816
HEAT-SENSITIVE TYPE MIMEOGRAPHIC SCREEN FORMING APPARATUS
Yuichi Fujiwara; Chikao Nakagawa; Hiromi Ito, and Yoshinori Kobayashi, all of Yokohama, Japan, assignors to Graphtec Corporation, Kanagawa, Japan
Filed Sep. 5, 1996, Ser. No. 706,569
Claims priority, application Japan, Sep. 7, 1995, 7-255574
Int. Cl.^{6} B41C *1/14*
U.S. Cl. 101—128.4 **6 Claims**

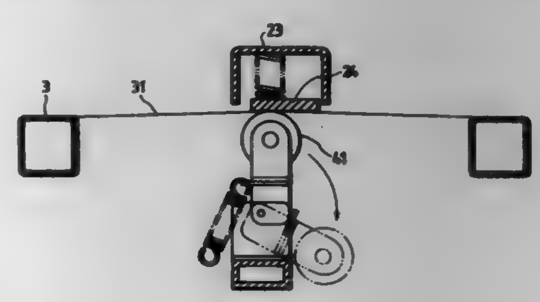

1. A heat-sensitive type mimeographic screen forming apparatus, comprising:
a screen fabric frame;
a screen fabric spread on said screen fabric frame;
a platen which corresponds in length to an inside width of said screen fabric frame;
a thermal head for selectively heating said screen fabric supported by said platen to form a mimeographic screen according to an image signal;
means for supporting said thermal head which corresponds in length to the width of said screen fabric spread on said screen fabric frame, in such a manner that said thermal head is confronted with said screen fabric spread on said screen fabric frame;
means for supporting said platen, in such a manner that said platen pushes said screen fabric upwardly which is spread on said screen fabric frame, so that a top portion of said screen fabric thus pushed upwardly is brought into contact with a heat generation part of said thermal head;
means for relatively moving said thermal head and said platen in synchronization with respect to said screen fabric held between them; and
means for driving said thermal head and said moving means for forming said mimeographic-screen according to signals from an image holding device.

5,701,817
APPARATUS FOR ADJUSTING THE MOVEMENT OF A ROLLER IN A PRINTING PRESS
Norbert Thünker, Hirschberg, and Rudi Junghans, Wilhelmsfeld, both of Germany, assignors to Heidelberger Druckmaschinen Aktiengesellschaft, Heidelberg, Germany
Filed Oct. 6, 1995, Ser. No. 549,193
Claims priority, application Germany, Oct. 8, 1994, 44 35 991.8
Int. Cl.^{6} B41F *31/14*
U.S. Cl. 101—350 **20 Claims**

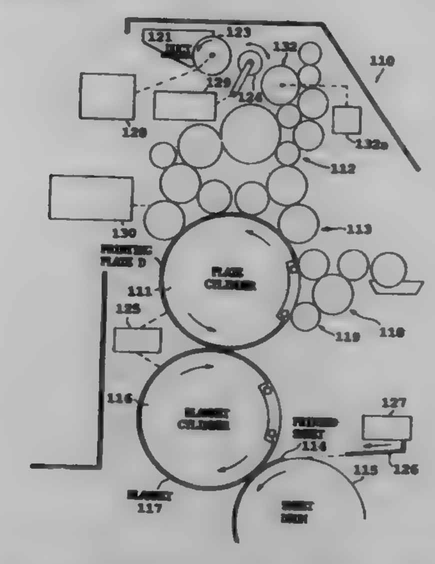

1. A method for printing items of a print job in a rotary printing press, a print job being the transfer of ink from the rotary printing press to a series of individual items to be identically printed, the rotary printing press comprising at least one distributor roller having an axis of rotation, said at least one distributor roller being movable in a direction substantially parallel to the axis of rotation over a lateral stroke, said method comprising the steps of:
determining an ink profile for the items to be printed on in a print job of individual items to be identically printed;
determining an ink profile stroke of said at least one distributor roller for printing the print job of individual items to be identically printed based on the determined ink profile for printing;
determining a minimal stroke of said at least one distributor roller to minimize the lateral spreading of ink on said at least one distributor roller upon an interruption of items being fed in the print job of individual items to be identically printed;
establishing the ink profile for the items to be printed on in the print job of individual items to be identically printed on said at least one distributor roller;
providing the items to be printed on in the print job of individual items to be identically printed;
feeding the items to be printed on to the rotary printing press to print in the print job of individual items to be identically printed;
stroking said at least one distributor roller at the determined ink profile stroke;
printing on the items being fed in the print job of individual items to be identically printed;
interrupting the feeding of items to be printed on in the print job of individual items to be identically printed prior to the completion of printing of all of the items to be printed on in the print job of individual items to be identically printed while the printing press continues to run and said at least one distributor roller continues to rotate;
automatically changing the stroke of said at least one distributor roller from the determined ink profile stroke for printing to the minimal stroke during an interruption of feeding of items to be printed on in the print job of individual items to be identically printed thus minimizing the lateral spreading of ink on said at least one distributor roller;
resuming the feeding of items to be printed on in the print job of individual items to be identically printed; and
automatically changing the stroke of said at least one distributor roller from the minimal stroke to the determined ink profile stroke for printing upon a resumption of the feeding of items to be printed on in the print job of individual items to be identically printed.

5,701,818
PRINTING PRESS CYLINDER COUPLING METHOD AND APPARATUS
Hans Dierk Mohrmann, Höchberg, Germany, assignor to Koenig & Bauer-Albert Aktiengesellschaft, Wurzburg, Germany
Filed Oct. 7, 1996, Ser. No. 726,684
Claims priority, application Germany, Oct. 7, 1995, 195 37 421.5
Int. Cl.^{6} B41F *13/10*
U.S. Cl. 101—375 **12 Claims**

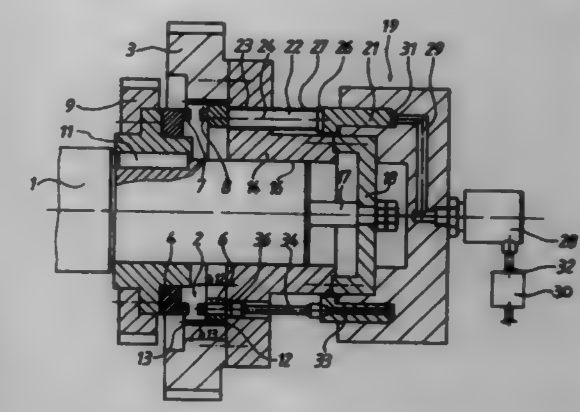

4. A printing press cylinder coupling device for coupling a cylinder to a toothed driving wheel comprising:
a toothed drive wheel;
a cylinder journal extending from the cylinder;
a cylinder coupling disk attached to said cylinder journal;
a driving wheel coupling disk attached to the toothed driving wheel;
means for shifting one of said coupling disks toward and away from the other of said coupling disks;
a work cylinder chargeable by a pressure medium and operable to shift said one coupling disk toward said other coupling disk;
a control valve carried by said one of said coupling disks, said control valve receiving the pressure medium from said work cylinder; and
means for controlling the pressure medium in said work cylinder during coupling engagement between said disks and when said disks are engaged whereby a coupling engagement pressure of the pressure medium in said work cylinder is less than a coupling engaged pressure of the pressure medium in said work cylinder.

5,701,819
SHEET TRANSFER DRUM
Günter Stephan, Wiesloch-Bayertal, Germany, assignor to Heidelberger Druckmaschinen AG, Heidelberg, Germany
Filed Sep. 1, 1995, Ser. No. 522,734
Claims priority, application Germany, Sep. 5, 1994, 44 31 548.1; Nov. 28, 1994, 44 42 301.2
Int. Cl.^{6} B41F *1/30*
U.S. Cl. 101—409 **7 Claims**

1. Sheet transfer drum mounted between printing units within side walls of a rotary printing press, comprising two gripper bars

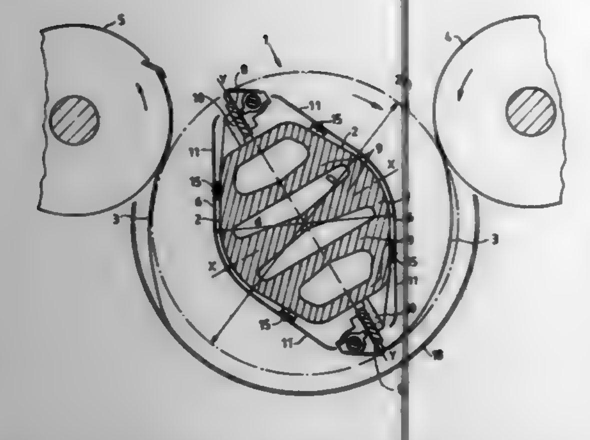

arranged symmetrically on a circumference of the sheet transfer drum so as to be located diametrically opposite one another on a y-axis of the sheet transfer drum; a drum body core formed with side surfaces extending between said gripper bars over the entire length of the sheet transfer drum within said circumference of the sheet transfer drum and having a convex curvature with a curvature gradient which is largest in the region of the x-axis and diminishes continuously towards said gripper bars.

5,701,820
DEVICE FOR WASHING AND DRYING PRINTING PLATES
Peter Hanosek, Staig 10, D-75236, Kämpfelbach-Ersingen, Germany
PCT No. PCT/EP94/01973, § 371 Date Jun. 21, 1996, § 102(e) Date Jun. 21, 1996, PCT Pub. No. WO95/00338, PCT Pub. Date Jan. 5, 1995
PCT Filed Jun. 16, 1994, Ser. No. 569,146
Claims priority, application Germany, Jun. 18, 1993, 93 09 127 U; Jul. 16, 1993, 93 10 649 U
Int. Cl.[6] B41F *35/00*
U.S. Cl. 101—424 **17 Claims**

1. Device for washing and drying printing plates comprising
an input table,
a successive series of work stations for washing, rinsing rubberizing and drying, Page 2
each of said work stations having a pair of rolls having horizontal axes of rotation, each pair of rolls having an opening between the rolls, said openings being level with the input table, at least one roll per pair of rolls being driven in order to convey printing plates through said openings by gripping the printing plates with the rolls,
an output table, said
work stations being positioned along a common line of sight coinciding with the conveying direction of the pair of rolls and longitudinal guides, said guides all being situated either above or below the opening between rolls and adjacent to the opening between rolls, said longitudinal guides marking the boundaries of an unobstructed passageway through all of said stations.

5,701,821
SCREEN CLEANING APPARATUS AND SCREEN CLEANING METHOD
Koichi Asai, Nagoya; Takeyoshi Isogai, Hekinan; Manabu Mizuno, Chiryu, and Jun Adachi, Nagoya, all of Japan, assignors to Fuji Machine Mfg. Co., Ltd., Aichi-ken, Japan
Filed May 20, 1996, Ser. No. 650,453
Claims priority, application Japan, May 22, 1996, 7-122576
Int. Cl.[6] B41F *35/00*
U.S. Cl. 101—424 **42 Claims**

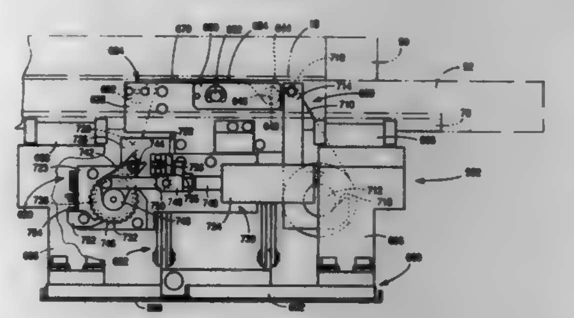

1. An apparatus for cleaning a screen of a screen printing machine, comprising:
an ultrasonic vibrator which vibrates at an ultrasonic frequency;
a cleaning-sheet supporting device which is adapted to support at least a portion of a porous cleaning sheet between the screen and said ultrasonic vibrator, such that said portion of the cleaning sheet is contactable with the screen and the ultrasonic vibrator; and
a washing-agent supplying device which is adapted to supply a washing agent to a cleaning sheet.

5,701,822
DEVICE FOR CHANGING PRINTING FORMS OR PLATES
Jacques Métrope, Laigneville, France, assignor to Heidelberger Druckmaschinen AG, Heidelberg, Germany, and Heidelberg Harris SA, Montataire Cedex, France
Filed Apr. 1, 1996, Ser. No. 627,772
Claims priority, application France, Mar. 31, 1995, 95 03828
Int. Cl.[6] B41F *27/06;21/00*
U.S. Cl. 101—477 **9 Claims**

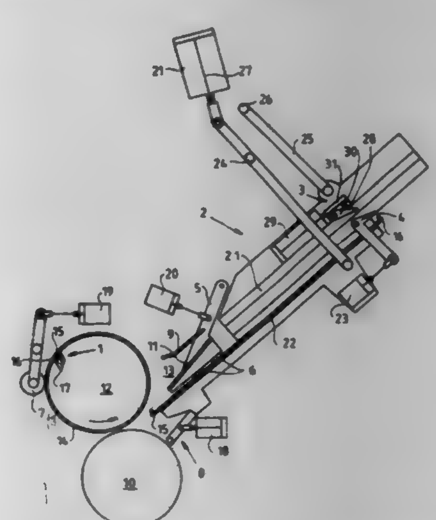

1. Device for changing printing forms on cylinders of printing presses, including a swivelable printing-form loading unit having respective compartments for feeding and for removing printing forms, the loading unit being swivelable into an operating position

at a gap formed in a printing-form cylinder equipped with clamping devices, and into a loading position wherein the loading unit is retracted from the operating position thereof, comprising:
a holding element having an insertion region for a printing form to be removed from the printing-form cylinder, and said holding element having devices for transporting a printing form to be fed onto the printing-form cylinder, the printing-form loading unit being swivelable into a vertical loading position thereof at said holding element;
a plurality of stops for the printing forms and one of said stops having a prestressed lever; and
control units operatively associated with the printing-form removing and feeding compartments of the printing-form loading unit for actuating said stops.

5,701,823
SELF ALIGNING TOOL FOR REGISTERING ROTARY PRINTING PLATES AND METHOD OF REGISTERING PLATES
Jerry L. Morris, 304 S. Philpot St., Cedartown, Ga. 30125
Filed Jan. 27, 1997, Ser. No. 791,463
Int. Cl.[6] B41L *3/02*
U.S. Cl. 101—486 **14 Claims**

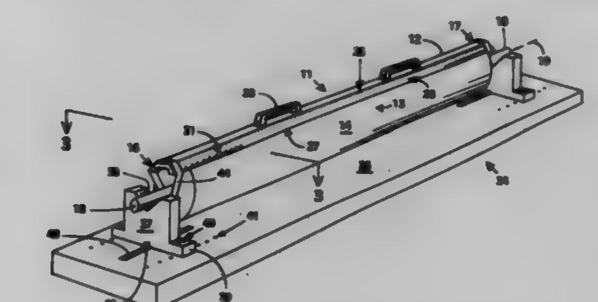

14. A method of mounting flexographic printing plates on a cylindrical surface of a rotary printing press plate cylinder comprising the steps of:
resting a substantially channel shaped bar on said cylindrical surface of said printing press plate cylinder in an orientation at which parallel spaced apart first and second linear regions of the channel shaped bar are in abutment with said cylindrical surface,
pinning a flexographic printing plate having spaced apart register pin openings to said bar at locations thereon which are equidistant from said first linear region and equidistant from said second linear region,
adhering a first portion of said flexographic printing plate to said cylindrical surface,
unpinning said flexographic printing plate from said bar and removing said bar from said cylindrical surface, and
wrapping said flexographic printing plate around said cylindrical surface while adhering other portions of said plate thereto.

5,701,824
WIRE ROPE TROLLEY
James W. Johnson, Hartford, and Donald H. Hillard, Mayville, both of Wis., assignors to Hubbell Incorporated, Orange, Conn.
Filed May 9, 1996, Ser. No. 647,108
Int. Cl.[6] B61B *3/00*
U.S. Cl. 104—112 **21 Claims**

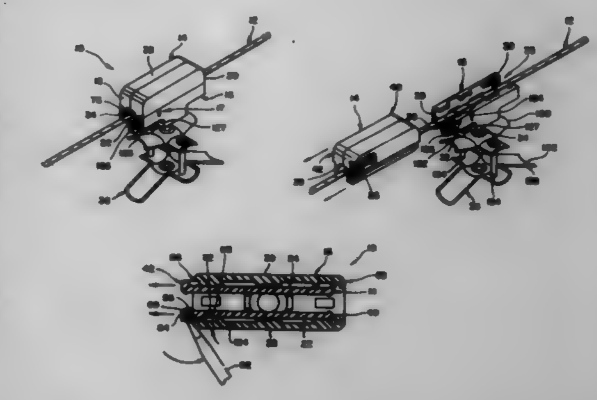

1. A trolley comprising:
a top member having a longitudinal axis and a top connecting portion with a top locking element; and
a base member having a base connecting portion for slidably engaging with said top connecting portion in a direction substantially parallel to said longitudinal axis, said base connecting portion having a base locking element releasably engaging said top locking element for releasably locking said top member to said base member,
said base member further having a portion for attaching a holding device,
said top and base members defining a through passageway for receiving an elongated support therein, said through passageway extending lengthwise, substantially parallel to said longitudinal axis.

5,701,825
GAP CLOSING DEVICE FOR CLOSING SIDE WALL GAPS IN AUTO RACK CARS
Walter J. Peach, Jr., Elgin, Ill., assignor to Zeftek, Inc., Montgomery, Ill.
Filed Mar. 28, 1996, Ser. No. 623,135
Int. Cl.[6] B61D *45/00*
U.S. Cl. 105—355 **26 Claims**

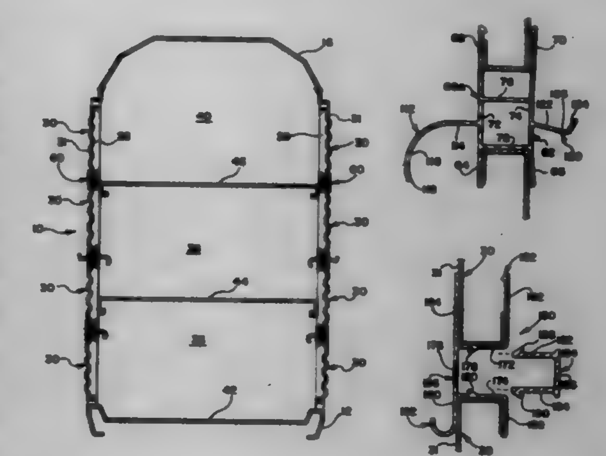

1. In an auto rack railroad car having opposed walls including a plurality of horizontally extending and vertically spaced apart sidewall panels defining horizontally extending gaps between adjacent upper and lower sidewall panels, each said sidewall panel having an outer face and an inwardly extending flange on the periphery thereof; the improvement being in means for closing the gaps between said adjacent upper and lower sidewall panels, said means comprising:
body means for positioning in each said gap and extending substantially the entire length of said gap,
first arm means extending from the body means for mounting said body means to said lower sidewall panel and maintaining a substantially water-tight seal therewith, said first arm means including interior and exterior arms connected to said body means.

second arm means extending from the body means for mounting said body means to said upper sidewall panel and maintaining a substantially water-tight seal therewith, said second arm means including interior and exterior arms connected to said body means, and

means on said first and second arm means for locking said arm means onto the flanges of said sidewall panels,

whereby air and water are prevented from entering said car through said gap.

5,701,826
TABLE FOR RECREATIONAL VEHICLES
John N. Dodgen, #8 Woodland Est., Humboldt, Iowa 50548
Continuation of Ser. No. 359,911, Dec. 20, 1994, abandoned. This application Nov. 12, 1996, Ser. No. 748,236
Int. Cl.⁶ A47B *9/00;23/00*
U.S. Cl. 108—44 **1 Claim**

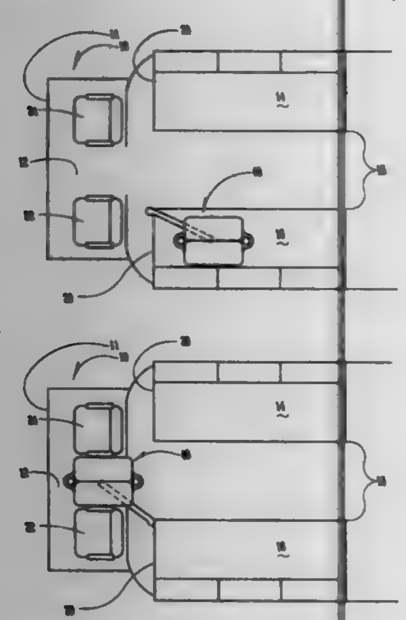

1. A table in combination with a recreational vehicle having opposite furniture seats with an aisle space therebetween, and each of said seats having an end portion in spaced relation to two pivotally mounted seats, said table comprising, an inverted L-shaped support member having a vertical arm

and a horizontal arm,

said vertical arm having a lower end and said horizontal arm having an outer end,

said vertical arm being positioned adjacent the end portion of one of said furniture seats,

a pivotal support element on the lower end of said vertical arm to permit said support member to pivot about a vertical axis,

a horizontal table top pivotally secured about a vertical axis to the outer end of said horizontal arm, whereby said table top can be pivoted to a plurality of pivotal positions with respect to said horizontal arm, and said support member can be pivoted to a plurality of pivotal positions with respect to said pivotal support element to move said table top to a plurality of operational positions with respect to said pivotal support element,

means for releasably fixing the lower end of said vertical arm to said pivotal support element,

said furniture seats and said pivotally mounted seats being sufficiently spaced with respect to each other and with respect to said vertical arms, and

said table top and said horizontal arms being of sufficient magnitude to permit said table top to be accessible to persons sitting in each of said furniture seats when in a first position, and to permit said table top to be accessible to persons seated in said pivotally mounted seats when in a second position.

5,701,827
PALLET ASSEMBLY
Toshinaga Urabe, 3-20-21, Sounan, Sagamihara-shi, Kanagawa-ken 228, Japan
Filed Dec. 8, 1993, Ser. No. 163,080
Int. Cl.⁶ B65D *19/12;* **A47B** *3/00*
U.S. Cl. 108—56.1 **13 Claims**

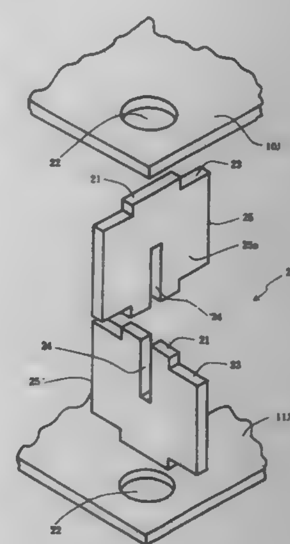

1. A pallet assembly arrangement, comprising:

a top deck comprising a substantially planar member having an upper support surface substantially perpendicular to a vertical axis, a lower surface substantially perpendicular to the vertical axis and a plurality of deck holes in said top deck, said deck holes extending from said lower surface toward said upper surface in the vertical direction and being defined by vertical surfaces of said top deck; and

a plurality of vertical support members, each one of said support members comprising an upper end having a horizontal support surface substantially parallel to said lower surface of said top deck that engages said lower surface and supports said top deck in a vertical direction and a projection projecting in the vertical direction from said horizontal support surface and into disengageable engagement with one of said deck holes of said top deck, said projection having lateral surfaces engaging said vertical surfaces of said holes of said top deck such that said projections provide horizontal engagement and support between said support members and said top deck while said horizontal support surfaces provide vertical engagement and support between said support members and said top deck;

wherein said plurality of vertical support members each comprises a plurality of support bodies removably connected together, and

wherein each of said support bodies comprises one end having a said horizontal support surface and a said projection projecting from said horizontal support surface, another end having a second horizontal support surface and another said projection projecting from said second horizontal support surface, and a support assembling cutout in each of said support bodies for engagement with another of said support bodies.

5,701,828
ELECTRONIC SECURITY SYSTEM
Randolph C. Benore, North Canton; Joseph Gagliano, Canton, both of Ohio; Shawn Gibson, Newago, Mich.; Leo J. Grosswiller, East Canton, Ohio; Gram McGeorge. Spring Lake, and Donald Neidlinger, Grand Haven, both of Mich., assignors to Diebold, Incorporated, Canton, Ohio
Continuation of Ser. No. 305,544, Sep. 14, 1994, abandoned. This application Jun. 28, 1996, Ser. No. 672,470
Int. Cl.⁶ E05G *1/00*
U.S. Cl. 109—56 **24 Claims**

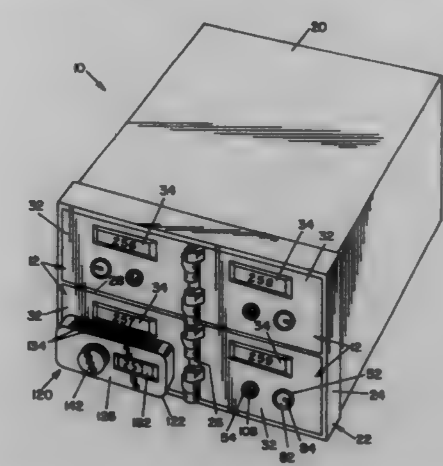

1. An electronic lock system for controlling access to a plurality of enclosures each having an openable and closeable panel, said system comprised of:

a lock mechanism mounted to each of said panels, said lock mechanism having a lock member movable between a first position locking said panel and a second position unlocking said panel, each of said lock mechanisms having a specific access code allowing movement of said lock member from said first position to said second position;

identification means for identifying individuals authorized for access to one or more of said enclosures;

processing means for storing information regarding access codes for each of said enclosures and individual identification information, and for identifying an enclosure that an authorized individual is allowed access to; and

a hand-held portable key device for use with said lock mechanisms on said panels, said key device being mountable onto said panels to remain in place thereon, said key device having memory means programmable by said processing means for storing an access code to a lock mechanism on one of said panels and means for erasing said access code from said memory means after a predetermined period of time.

5,701,829
APPARATUS FOR RECOVERING HEAT IN A SPENT LIQUOR RECOVERY BOILER
Keijo Raak, Varkaus, Finland, assignor to Ahlstrom Machinery Corporation, Noormarkku, Finland
PCT No. PCT/FI93/00426, § 371 Date Apr. 13, 1995, § 102(e) Date Apr. 13, 1995, PCT Pub. No. WO94/09205, PCT Pub. Date Apr. 28, 1994
PCT Filed Oct. 18, 1993, Ser. No. 416,753
Claims priority, application Finland, Oct. 19, 1992, 924718
Int. Cl.⁶ F23G *7/04*
U.S. Cl. 110—238 **19 Claims**

11. Apparatus for use in the pulp industry for recovering heat in a spent liquor recovery boiler comprising:

a recovery boiler having a furnace, and a water steam/circulation system, and having boiler walls that are formed of water cooled tubes connected to said water/steam circulation system;

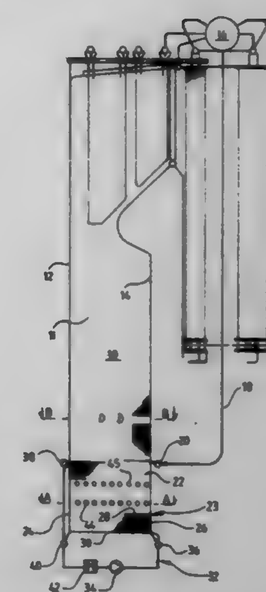

a lower section of said boiler furnace in the shape of a vertical cylinder;

air ports disposed in said boiler walls of said lower section spaced substantially equal distances from a center point of said furnace; and

wherein said lower section of said boiler comprises bottom end walls that are formed as a separate structure, and which is connected to a cooling medium circulation system distinct from said boiler/steam circulation system.

5,701,836
EMBROIDERY DATA PROCESSING APPARATUS
Yukiyoshi Muto, Nagoya, Japan, assignor to Brother Kogyo Kabushiki Kaisha, Nagoya, Japan
Filed Mar. 26, 1996, Ser. No. 622,603
Claims priority, application Japan, Mar. 30, 1995, 7-072743
Int. Cl.⁶ D05C *5/02*
U.S. Cl. 112—102.5 **29 Claims**

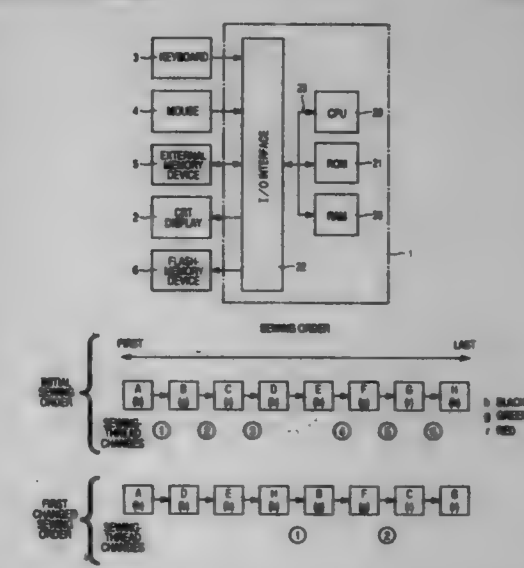

1. An apparatus for processing a plurality of sets of sewing data, each set of which is needed to control a sewing machine to sew, on a work sheet, a corresponding one of a plurality of sewing patterns with a corresponding one of a plurality of sewing threads, said each set of sewing data including a set of designating data designating said corresponding one sewing thread, the apparatus comprising:

a data obtaining device which obtains said sets of sewing data which are needed to control the sewing machine to sew said sewing patterns in a predetermined order;

searching means for searching said sewing patterns for finding at least one overlapping-pattern group consisting of a plurality of overlapping patterns which overlap each other; and

changing means for, when said sewing patterns include said at least one overlapping-pattern group, changing said predetermined order to a changed order such that an order of sewing of said overlapping patterns in relation with each other in said predetermined order is maintained in said changed order and such that a number of sewing-thread changes needed to sew said sewing patterns in said changed order is smaller than a number of sewing-thread changes needed to sew said sewing patterns in said predetermined order.

5,701,831
HEADGEAR HOLDER FOR USE WITH SEWING MACHINE
Tetsuo Morita, Nagoya, Japan, assignor to Brother Kogyo Kabushiki Kaisha, Nagoya, Japan
Continuation-in-part of Ser. No. 605,794, Feb. 22, 1996, Pat. No. 5,649,496. This application Jun. 25, 1996, Ser. No. 668,471
Claims priority, application Japan, Feb. 27, 1995, 7-064772; Jun. 29, 1995, 7-163605; Aug. 28, 1995, 7-218454
Int. Cl.^{6} D05B *39/00*
U.S. Cl. 112—103 **22 Claims**

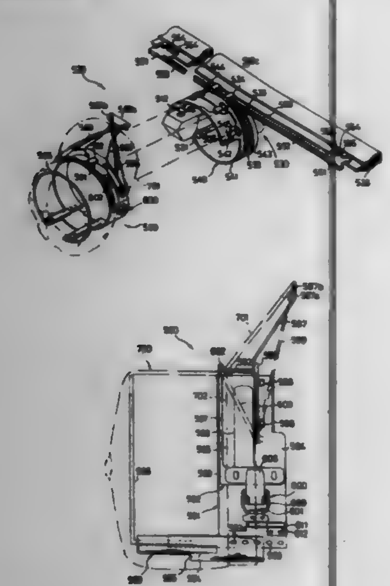

1. A headgear holder for use with a sewing machine, the headgear holder holding a headgear including a covering member which has an opening and covers the head of a person through the opening, and a sweatband which is fixed at a portion thereof to an inner surface of an annular portion of the covering member located on the side of the opening, the sweatband being foldable into an inner space of the covering member and unfoldable outside from the inner space through the opening, the sewing machine forming an embroidery on each of a frontal portion, and at least one of a right and a left temporal portion, of the annular portion, the headgear holder comprising:

a main frame member on which the headgear is set such that the sweatband unfolded outside and the annular portion of the covering member externally fit on said main frame member;

a pressing member which externally presses the headgear set on said main frame member; and

two fastening devices one of which is provided between said main frame member and a corresponding one of opposite ends of said pressing member and the other of which is provided between the main frame member and the other end of the pressing member, said two fastening devices cooperating with each other to fasten the pressing member to the main frame member to hold the headgear between the pressing member and the main frame member, each of said fastening devices being provided at a position where said each fastening device permits the sweatband unfolded outside to fit externally on the main frame member.

5,701,832
MULTI-HEAD SEWING MACHINE
Ikuo Tajima; Terutada Kojima; Tomoaki Anesaki, and Minao Fukuoka, all of Kasugai, Japan, assignors to Tokai Industrial Sewing Machine Co., Ltd., Aichi, Japan
Filed Mar. 5, 1996, Ser. No. 611,072
Claims priority, application Japan, Mar. 7, 1995, 7-077253; Mar. 7, 1995, 7-077254
Int. Cl.^{6} D05B *25/00;* **D05C** *3/02*
U.S. Cl. 112—155 **1 Claim**

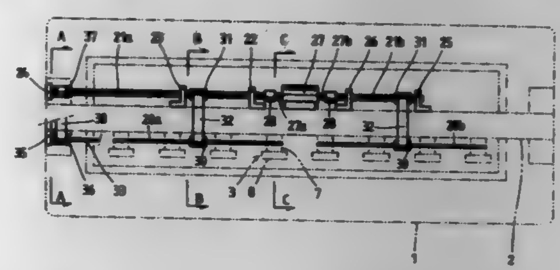

1. A multi-head sewing machine comprising a plurality of heads, having at least a needle bar and a thread take-up lever, arranged in a row; a plurality of shuttle holders corresponding to the number of heads, each supporting therein a shuttle, arranged in a row; a main shaft, penetrating said row of heads, which rotates to drive said needle bar and said thread take-up lever in each head; and a lower shaft, pentrating said row of shuttle holders, which rotates to drive said shuttle in each shuttle holder;

wherein said sewing machine further comprises a drive shaft, extended parallel to said main shaft, which is rotationally driven by a drive motor, the rotational driving force of said drive shaft being adapted to be transmitted to said main shaft at more than one position; and said main shaft is divided into two shorter parts, and the rotational driving force of said drive shaft is adapted to be transmitted to the thus divided main shaft substantially at the middle portion.

5,701,833
METHOD AND APPARATUS FOR SEWING CLOTH PIECES IN A SERIES TO CONTINUOUS SLIDE FASTENER CHAIN
Yasutoshi Suzuki, Toyama-ken, Japan, assignor to YKK Corporation, Tokyo, Japan
Filed Jun. 28, 1996, Ser. No. 671,682
Claims priority, application Japan, Jun. 30, 1995, 7-164980
Int. Cl.^{6} D05B *35/06;27/16*
U.S. Cl. 112—475.16 **7 Claims**

1. A method of automatically sewing a plurality of cloth pieces orderly in a series to a continuous slide fastener chain, comprising the steps of:

(a) continuously supplying the continuous slide fastener chain to a sewing station in synchronism with a sewing speed;

(b) sewing, in the sewing station, to the slide fastener chain a preceding cloth piece from a leading end of said preceding cloth piece to a predetermined position short of a trailing end thereof and interrupting the sewing at the predetermined position;

(c) feeding, in a cloth-piece supply station, a succeeding cloth piece at a high speed toward said sewing station to a position

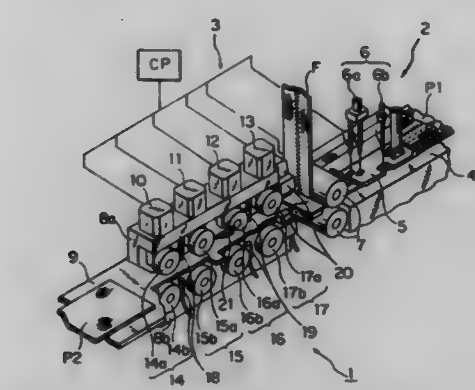

spaced a predetermined distance upstream of the trailing end of said preceding cloth piece while the sewing is interrupted, and then feeding said succeeding cloth piece at a low speed until a leading end of said succeeding cloth piece comes into contact with the trailing end of said preceding cloth piece; and

(d) sewing a remaining portion of said preceding cloth piece as started in response to that the leading end of said succeeding cloth piece has come into contact with the trailing end of said preceding cloth piece while the sewing is interrupted.

5,701,834
LIFT FOR WATERCRAFT
Richard A. Lyons, 5642 9th Ave. North, St. Petersburg, Fla. 33780
Filed Aug. 26, 1996, Ser. No. 703,344
Int. Cl.^{6} B63C *1/02*
U.S. Cl. 114—48 **12 Claims**

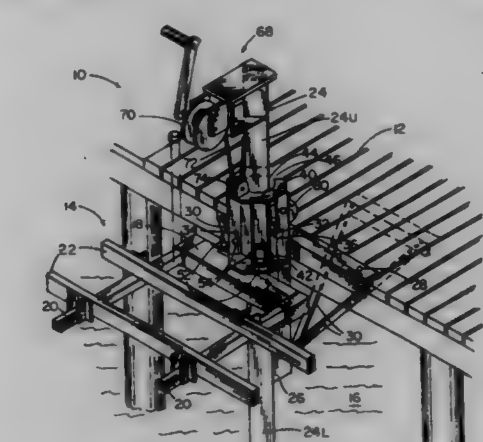

1. A lift for installation along a boat dock, sea wall or other permanent structure for vertically lifting a watercraft or other object from a body of water, comprising in combination:

a non-round support column positioned vertically adjacent to the structure, said non-round support column including a fixed lower section and a rotatable upper section, said non-round support column being substantially square in cross-section with four faces and wherein said carriage assembly includes at least four inwardly extending wheels for rolling for rolling up and down said four faces of said non-round support column;

a carriage assembly positioned about said non-round support column, said carriage assembly including a plurality of inwardly extending wheels for rolling up and down faces of said non-round support column, said carriage assembly includes a plurality of vertical plates extending between upper and lower horizontal plates, said horizontal plates including a center hole through which passes said non-round support column, said wheels being journalled relative to said vertical plates to extend inwardly in rolling engagement with said non-round support column; and

a cradle affixed to said carriage assembly,

whereby, the boat or other object may be lifted vertically out of the body of water by said cradle as the carriage assembly travels upwardly along the non-round support column and, when said carriage assembly is positioned on said rotatable upper section, said carriage assembly may be rotated to position said cradle and the object seated thereon above the structure.

5,701,835
PRODUCTION VESSEL WITH SINUSOIDAL WATERLINE HULL
Knut Børseth, Tårnåsen, Norway, assignor to Petroleum Geo-Services AS, Norway
Filed Feb. 16, 1996, Ser. No. 602,963
Int. Cl.^{6} B05C *1/00*
U.S. Cl. 114—56 **7 Claims**

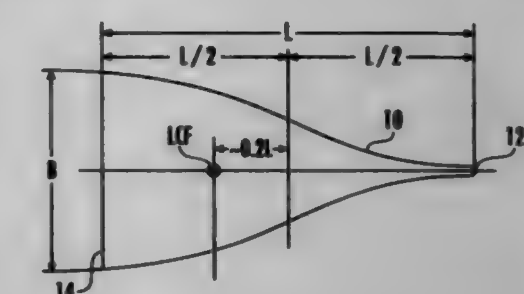

1. A self-weathervaning, self-propelled marine production platform having a bow and a transom stern, a longitudinal length L, a middle line plane, a base plane, and a design waterline plane, the platform comprising:

approximately sinusoidal waterlines; and

a surface extending from the transom stern at the design waterline plane to the base plane at about L/3 from the bow and defining an angle between the base plane and an oblique plane, said oblique plane being defined by:

a line at the intersection of the transom stern and the design waterline plane; and

a point located on said surface at about 0.2 L from the transom stern; and

a production-mooring turret located at a self-weathervaning position along the middle line plane.

5,701,836
APPARATUS FOR REMOVING A VACUUM BAG OF A SHIP STERN
I-Hun Tsui, P.O. Box 90, Tainan 704, Taiwan
Filed Feb. 11, 1997, Ser. No. 798,777
Int. Cl.^{6} B63B *1/34*
U.S. Cl. 114—67 A **5 Claims**

1. In a snip, a device for removing a vacuum bag from a stern thereof, comprising an air passageway formed in the stern of said ship for open air flow into said vacuum bag arising just behind said stern so as to diminish suction force of said vacuum bag acting on said stern, said passageway comprising a plurality of air entrances provided in an upper surface of a rear deck of said stern, a space formed between an inner wall and an outer wall of said stern, said space being separated with a plurality of vertical support plates into plural sections, a plurality of holes spaced apart in said outer wall and each provided with a valve unit, and a rearwardly projecting generally upwardly concave stop wall extending aft of the stern from a bottom of said ship, whereby air exhausted from said

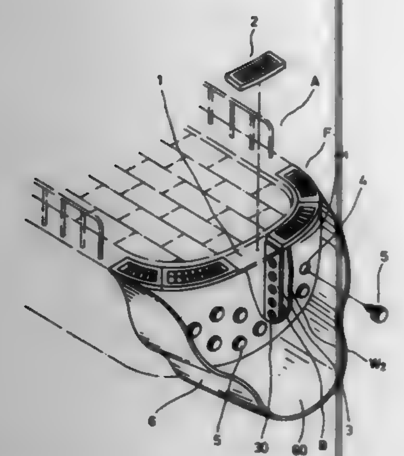

plurality of openings into an area above said stop wall and aft of said stern diminishing said suction drag caused by said vacuum bag.

5,701,837
BOAT DOCK BUMPER
Thomas E. Harvey, 615 S. Main St., Bluffton, Ohio 45817
Filed Aug. 2, 1996, Ser. No. 691,517
Int. Cl.⁶ B63B *59/02*
U.S. Cl. 114—219 **8 Claims**

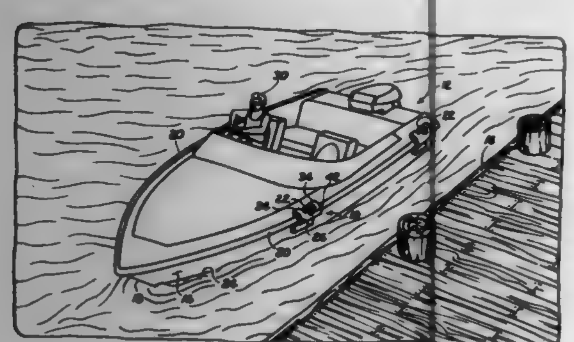

1. A boat dock bumper for attachment to the gunwale of a watercraft and which is conformable to the outer surface of the hull of the watercraft, comprising:
a generally rectangular-shaped member of uniform thickness having a bendable upper portion for resting on the gunwale and a flexible, deformable major body portion which is conformable to the outer surface of the hull so that the major body portion can be disposed contiguous thereagainst;
the upper portion having a central cut-out section and opposed flange portions;
a plurality of spaced-apart, flexible batten members disposed within the generally rectangular-shaped member and extending from the upper portion to the major body portion;
the batten members providing structural support and stability to the generally rectangular-shaped member and capable of flexible and bendable movement so that the major body portion can conform to the outer surface of the hull; and
attachment means for securing the generally rectangular-shaped member to the watercraft.

5,701,838
SHIFT LEVER DEVICE HOUSING
Hideaki Ito, and Shigetoshi Tomida, both of Aichi-ken, Japan, assignors to Kabushiki Kaisha Tokai-Rika-Denki-Seisakusho, Aichi-ken, Japan
Filed Nov. 3, 1995, Ser. No. 552,759
Claims priority, application Japan, Nov. 11, 1994, 6-279217
Int. Cl.⁶ G09F *11/00*
U.S. Cl. 116—28.1 **20 Claims**

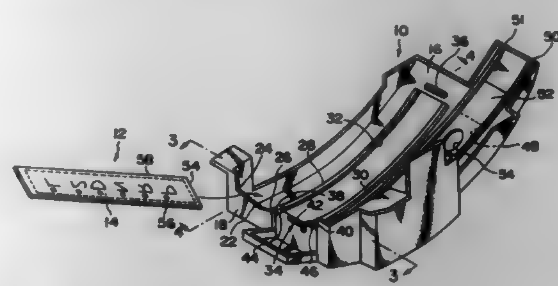

10. A shift lever device housing comprising:
an indicator plate;
an opening portion in said housing exposing an indication surface of said indicator plate to an exterior;
a pair of guide rails provided at transverse opposite sides of said opening portion, each guide rail of said pair of guide rails guiding and supporting said indicator plate which is inserted between said pair of guide rails and slid along its longitudinal axis over said opening portion;
a stopper provided in the vicinity of an indicator plate insertion side end portion of said opening portion, said stopper, together with said pair of guide rails, retaining said indicator plate;
a guide wall provided at an indicator plate insertion side of said stopper, said guide wall supporting transverse opposite end portions of said indicator plate that do not include said indication surface of said indicator plate; and
a supporting member provided between said guide wall and said stopper, said supporting member being provided such that, when said indicator plate is inserted, there exists a gap between said indicator plate and said stopper, said supporting member supporting the transverse opposite end portions of said indicator plate that do not include said indication surface of said indicator plate.

5,701,839
PRESSURE MINESWEEPING VEHICLE
Norman H. Jasper, Panama City, Fla., assignor to The United States of America as represented by the Secretary of the Navy, Washington, D.C.
Filed Feb. 21, 1967, Ser. No. 619,116
Int. Cl.⁶ B63B *1/38*
U.S. Cl. 114—264 **11 Claims**

1. Means for simulating a ship's submarine pressure signature comprising in combination:
buoyant vehicle means having a resilient pressure release underside adapted for floating on sea water;
means mounted on said buoyant vehicle means for effecting the support thereof on an air bubble of predetermined pressure

that is maintained substantially captive by the resilient pressure release underside thereof and the upper surface of said sea water;
open ended ballast cell means mounted on the upper side of the aforesaid resilient pressure release underside of said buoyant vehicle means in such manner as to effect the closing of the lower open ends thereof;
a predetermined quantity of fluid ballast disposed in said ballast cell means; and
means mounted on said buoyant vehicle means for the driving and steering thereof along a predetermined course.

5,701,840
PIVOTALLY MOUNTED BANNER HARNESS
Richard D. Cross, 5220 Lardon Rd. NE., Salem, Oreg. 97305
Filed Jul. 3, 1996, Ser. No. 675,852
Int. Cl.⁶ G09F *17/00*
U.S. Cl. 116—174 **5 Claims**

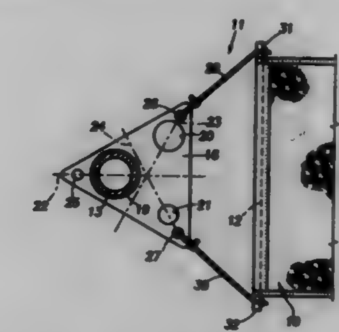

1. An assembly including a harness and a vertically oriented pole, said harness for securing the inner end of a banner or flag to said pole and comprising: plate means having a first hole by which said plate means is pivotally mounted around said pole, rod means adapted to be secured to said inner end of said banner or flag; and flexible cords attaching the end portions of said rod means to laterally spaced points on said plate means with said points being equidistant from said hole and on a line that is substantially parallel to said rod means.

5,701,841
BIRD FEEDER
Victor Fasino, 62 Oneida Ave., Landing, N.J. 07850
Filed Feb. 8, 1996, Ser. No. 598,683
Int. Cl.⁶ A01K *39/00*
U.S. Cl. 119—52.2 **11 Claims**

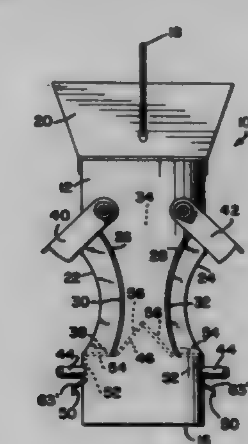

1. A bird feeder, comprising:
a body; wherein
said body has wall means therein cooperative with said body for forming a feed chamber within said body; and
floor means for forming a bottom of said feed chamber; wherein said floor means is only latchingly engaged with said body, and unlatchingly removable from said body;
said body has openings formed therein on opposite sides thereof;
said wall means comprises walls generally paralleling, and recessed from, said openings;
said walls have lowermost terminations;
lowermost portions of said openings are cooperative with said terminations for forming voids for providing external access into said body and said feed chamber;
said body further has (a) an open base, and (b) cut-outs formed on opposite sides thereof at said base;
said body also has first slots, communicating with said cut-outs and extending laterally from sides of said cut-outs, in a given horizontal plane;
said body additionally has second slots, communicating with said cut-outs and extending laterally from sides of said cut-outs, in a differing horizontal plane;
said floor means comprises a sheet of flexible material having oppositely-extending tabs; and
in a first mode of operation, first portions of said tabs are engaged with said slots in said given horizontal plane, and second portions of said tabs project outwardly from said cut-outs; and
in a second mode of operation, first portions of said tabs are engaged with said slots in said differing horizontal plane, and second portions of said tabs project outwardly from said cut-outs.

5,701,842
BIRD FEEDER
Franklyn Brian Whittles, Shrewsbury, United Kingdom, assignor to C J Wildbird Foods Ltd., Shropshire, United Kingdom
PCT No. PCT/GB95/00165, § 371 Date Aug. 30, 1996, § 102(e) Date Aug. 30, 1996, PCT Pub. No. WO95/26133, PCT Pub. Date Oct. 5, 1995
PCT Filed Jan. 27, 1995, Ser. No. 702,584
Claims priority, application United Kingdom, Mar. 26, 1994, 9406055
Int. Cl.⁶ A01K *39/012*
U.S. Cl. 119—52.2 **7 Claims**

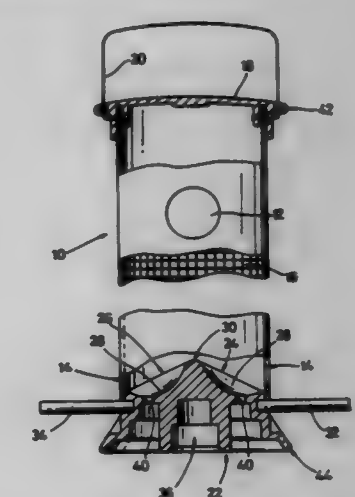

1. A container for dispensing food for birds comprises a hollow tube with at least one port therein for access to the food, and a base to the container, said base having a plug directed upwardly within the container, characterised in that said plug has at least one shedding face which is inclined so that a body of food particles in the container settling under gravity is shed towards the outside of the plug, and also characterised in that said at least one shedding face has a concave recess arranged opposite said at least one port.

5,701,843
PET MOBILE
Gus Lazides, 268 93rd St., Brooklyn, N.Y. 11209
Filed Sep. 30, 1996, Ser. No. 722,992
Int. Cl.[6] A01K *1/03*
U.S. Cl. 119—496 **4 Claims**

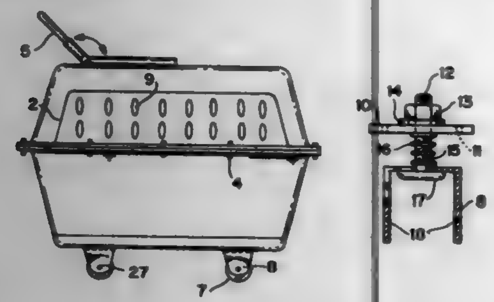

1. A carrier for a pet comprising:
upper and lower sections secured together at mating peripheral flanges,
when said upper and lower sections are secured together they form a compartment comprised of a front, rear, sides, top and a bottom,
ventilation means positioned at least in one of said ends and sides,
wheels attached to said bottom,
said wheels are movable from a first position in which said wheels engage a supporting surface to a second position in which said wheels do not engage said supporting surface, and
wherein said wheels are secured to a U-shaped flange having a top and a pair of depending arms,
said top having an aperture and a first slot communicating with said aperture,
one of said arms having a second slot communicating with said first slot,
a stud having a first end and means securing said first end to said bottom of said carrier, and
a second end attached to said top of said U-shaped flange,
resilient means secured between said top of said U-shaped flange and said means securing said first end to said bottom of said carrier.

5,701,844
CONTAINER WITH WASTE REMOVAL DEVICE
Edward J. Murphy, 6510 Preston Trail Dr., Houston, Tex. 77069
Continuation-in-part of Ser. No. 288,933, Aug. 10, 1994, Pat. No. 5,463,982. This application Oct. 23, 1995, Ser. No. 546,888
Int. Cl.[6] A01K *29/00*
U.S. Cl. 119—166 **19 Claims**

1. A waste containment system for containing animal waste and

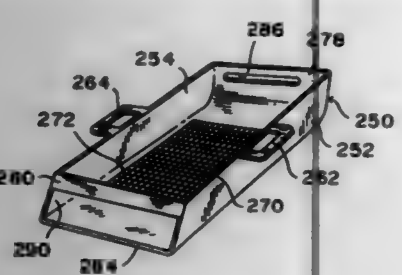

for removing animal waste from a mass of litter material therein, the system comprising
a container with an interior space,
a waste removal apparatus removably disposed in the interior space of the container, the waste removal apparatus comprising
a body member having two opposed spaced apart sides and an open end,
a bottom member interconnected between the two sides,
an end member interconnected between the two sides,
a reticulated structure on the bottom member, and
releasing means connected to the container or to the waste removal apparatus for releasably connecting
the waste removal apparatus to the container.

5,701,845
ANIMAL LITTER BOX
Paul L. Jablonski, McMurray, Pa., and Charles Rodriguez, Clearwater, Fla., assignors to Specialty Group Industries, Inc., West Mifflin, Pa.
Filed Sep. 28, 1995, Ser. No. 535,649
Int. Cl.[6] A01K *29/00*
U.S. Cl. 119—166 **11 Claims**

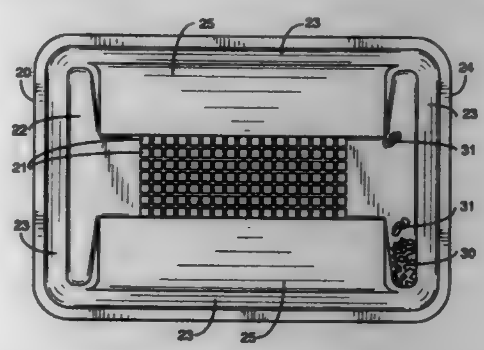

1. In an animal litter box including a litter base box having a bottom and side walls, and a litter sifting box having a horizontal bottom and inwardly sloped side walls and perforations in a central portion of said horizontal sifting box bottom for sifting litter therethrough and shaped for nesting in said base box, wherein the improvement comprising: an unperforated opposing outer portions of said sifting box bottom which are inwardly sloped at an angle which is less than 90° relative to said horizontal sifting box bottom, and said perforations having an inwardly tapered side edges for funneling litter downwardly therethrough and confined between said sloped opposing outer portions.

5,701,846
KNIT CELLULAR CATTLE MATTRESS FABRIC
Norman Marion Parker, IV, LaGrange, Ga., assignor to Milliken Research Corporation, Spartanburg, S.C.
Filed Oct. 28, 1996, Ser. No. 742,608
Int. Cl.[6] A01K *1/015*
U.S. Cl. 119—526 **8 Claims**

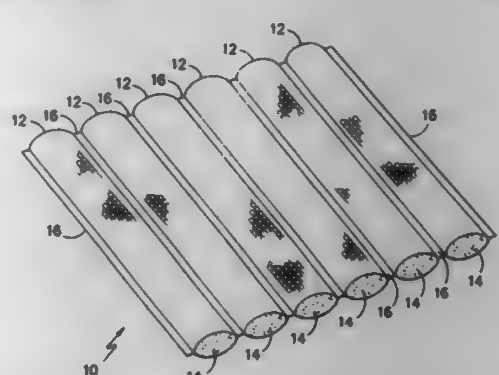

1. An animal mattress comprising a double needle bar warp knit fabric having tubes formed from independent top and bottom layers joined at intervals across the width of the fabric, soft shredded compound material in said formed tubes and means closing the ends of said tubes to prevent the escape of the shredded material.

5,701,847
Patent Not Issued For This Number

5,701,848
ADJUSTABLE ANIMAL LEASH PROVIDED WITH PLURAL BRANCH LEASH MEMBERS
Masashi Tozawa, 55-25, Satonakamachi 6-chome, Moriguchi-shi, Osaka, Japan
Filed Oct. 24, 1995, Ser. No. 547,762
Claims priority, application Japan, Sep. 18, 1995, 7-238068
Int. Cl.[6] A01K *27/00*
U.S. Cl. 119—797 **3 Claims**

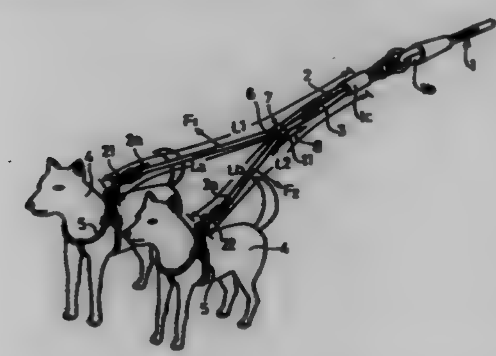

1. An animal leash comprising:
a leash member including a main leash member and a pair of branch leash members bifurcating at a distal end of said main leash member;
a hollow cylindrical adjuster through which both of said branch leash members adjacently pass, said adjuster being slidable along said branch leash members and having an end facet at a distal end which prevents said branch leash members from being pulled apart from distal ends of said branch leash members,
said adjuster being a cylindrical member, a passage of which has a cross-sectional configuration such that both of said branch leash members adjacently pass through said passage, the end facet of said adjuster inclining from an axis where both of said branch leash members are closely attached toward both sides of said adjuster.

5,701,849
DEVICE INCLUDING BUCKLE MEANS FOR RELEASE OF A PET COLLAR
Bernard Sochowski, Marlboro, N.J., and George Carroll, Greenwood Lakes, N.Y., assignors to The Hartz Mountain Corporation, Secaucus, N.J.
Continuation-in-part of Ser. No. 357,861, Dec. 14, 1994, Pat. No. 5,443,039. This application Aug. 21, 1995, Ser. No. 517,248
Int. Cl.[6] A62B *35/00*
U.S. Cl. 119—865 **5 Claims**

1. A device for releasing a collar of a pet animal, such as a cat or dog, when the pet animal tries to free itself from an obstacle, such as s tree branch or fence portion, in which the collar becomes entangled, said device comprising:
a belt member,

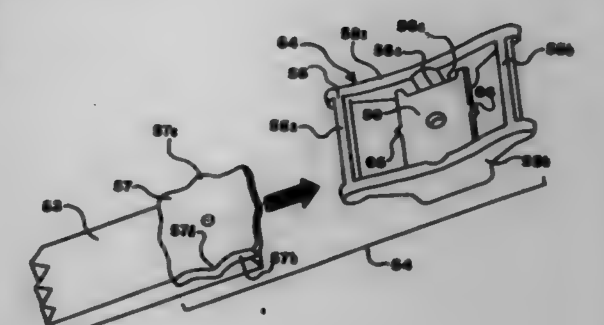

a receptacle buckle,
said receptacle buckle having a belt adjustment structure which allows said belt member and said receptacle buckle to function as an adjustable collar substantially around the neck of a pet animal so as to provide an appropriate fit,
said receptacle buckle having a female portion and a male portion, said male portion being releasably insertable into said female portion, said receptacle buckle being substantially attached to said belt member,
said belt adjustment structure and one other portion of said receptacle buckle forming a substantially integrally unified body of material, said one other portion of said receptacle buckle being either said female portion or said male portion,
said female portion and said male portion being disengagable from each other so as to release said adjustable collar from around the neck of said pet animal when said adjustable collar is substantially entangled by an obstacle encountered by said pet animal.
wherein said belt adjustment structure comprises a plurality of loops through which said belt member may be moved so as to provide said appropriate fit,
wherein further said plurality of loops comprise means for providing a substantially snug fit of said belt member, and wherein said plurality of loops includes a loop having at least one pointed projecting body of material extending from at least one pair of each plurality of loops said at least one pointed protecting body of material substantially engages with said belt member so as to substantially stop enlargement of the circumference formed by said belt member upon application of force to de-insert a part of said belt member already inserted through said loop.

5,701,850
STEAM GENERATOR
Wolfgang Köhler, Kalchreuth; Rudolf Kral, Forchheim, and Eberhard Wittchow, Erlangen, all of Germany, assignors to Siemens Aktiengesellschaft, Munich, Germany
Filed Feb. 22, 1995, Ser. No. 390,587
Claims priority, application Germany, Aug. 19, 1992, 42 27 457.5
Int. Cl.[6] F22B *15/00;25/00;37/10*
U.S. Cl. 122—235.23 **11 Claims**

1. A fossil-fired steam generator, comprising:
a gas flue having a bottom and a surrounding wall;
said surrounding wall having a first part disposed at said bottom of said gas flue and a second part disposed above said first part;
said surrounding wall being formed of substantially vertical, mutually gas-tightly connected tubes for conducting a flow of a medium;
said tubes in said first part of said surrounding wall having a greater internal diameter than said tubes in said second part of said surrounding wall;
a pressure balance vessel disposed outside said gas flue; and

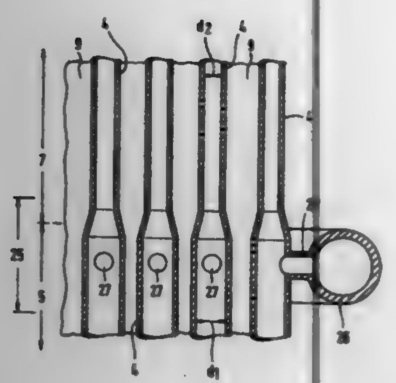

pressure balance tubes each connecting a respective one of said tubes of said surrounding wall to said pressure balance vessel.

5,701,851
COOLING SYSTEM FOR SPARK-IGNITION TWO-CYCLE ENGINE
Yasuhiko Nakano, and Yoichi Ishibashi, both of Saitama, Japan, assignors to Honda Giken Kogyo Kabushiki Kaisha, Tokyo, Japan
Continuation of Ser. No. 348,894, Nov. 25, 1994, abandoned.
This application Nov. 13, 1996, Ser. No. 747,820
Claims priority, application Japan, Nov. 27, 1993, 5-321035
Int. Cl.^{6} F01P *3/20*
U.S. Cl. 123—41.1 **10 Claims**

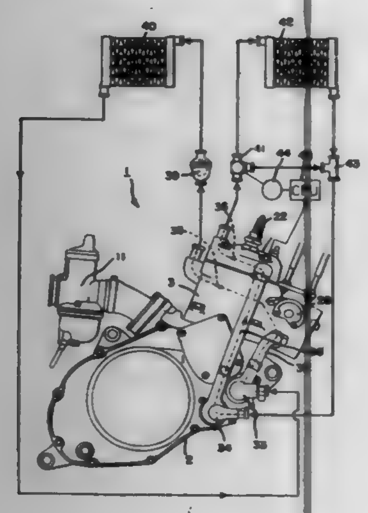

1. A cooling system for a spark-ignition two-cycle engine that causes a fresh charge, charged into its combustion chamber, to self-ignite at least in a low-load operation mode, said cooling system comprising:
a cylinder cooling system;
a cylinder head cooling system combined in parallel with the cylinder cooling system operating said cylinder head cooling system at a cooling capacity lower than that of the cylinder cooling system when the engine is in a cold condition, and for and
a cooling fluid temperature regulating means responsive to a plurality of different operating conditions of the spark-ignition two-cycle engine for increasing a cooling capacity of the cylinder head cooling system after a temperature of the cooling fluid circulating through the cylinder head cooling system has reached a predetermined temperature.

5,701,852
COOLANT TEMPERATURE CONTROL SYSTEM FOR VEHICLES
Kazutaka Suzuki; Yasutoshi Yamanaka, both of Kariya, and Tatsuo Sugimoto, Obu, all of Japan, assignors to Nippondenso Co., Ltd., Kariya, Japan
Filed Aug. 14, 1996, Ser. No. 696,512
Claims priority, application Japan, Aug. 31, 1995, 7-222821
Int. Cl.^{6} F01P *11/02*
U.S. Cl. 123—41.14 **17 Claims**

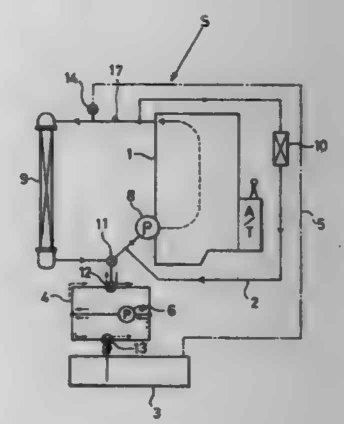

1. A coolant temperature control system for vehicles having an engine cooled by coolant, said control system comprising:
an insulated container connected to said engine;
a pump for pumping coolant from said engine to said insulated container;
means for detecting coolant temperature after said engine has stopped;
means for determining whether said coolant temperature after said engine has stopped has reached a substantially maximum temperature on a basis of a detected value of said coolant temperature detecting means; and
a control unit in communication with said detecting means and said determining means for actuating said pump when it has been determined by said maximum temperature determining means that said coolant temperature has reached said substantially maximum temperature.

5,701,853
OIL COOLING STRUCTURE FOR A VEHICLE
Atsuhiko Takahashi, Saitama, Japan, assignor to Honda Giken Kogyo Kabushiki Kaisha, Tokyo, Japan
Filed Feb. 2, 1996, Ser. No. 596,425
Claims priority, application Japan, Feb. 7, 1995, HEI 7-019408
Int. Cl.^{6} F01P *11/08;* **F01M** *5/00*
U.S. Cl. 123—41.33 **19 Claims**

1. A cooling structure for a vehicle comprising:
a cooler positioned to cover a front surface and right and left side surfaces of a head pipe positioned in front of a fuel tank;
a first conduit for connecting an output for a coolant for an engine to an inlet of said cooler; and
a second conduit for connecting an inlet for a coolant for the engine to an outlet of said cooler;
wherein at least one of said first conduit and said second conduit extends along an upper surface of said cooler and past said right side surface, said front surface, and said left side surface of said head pipe, and wherein said cooler is connected to a

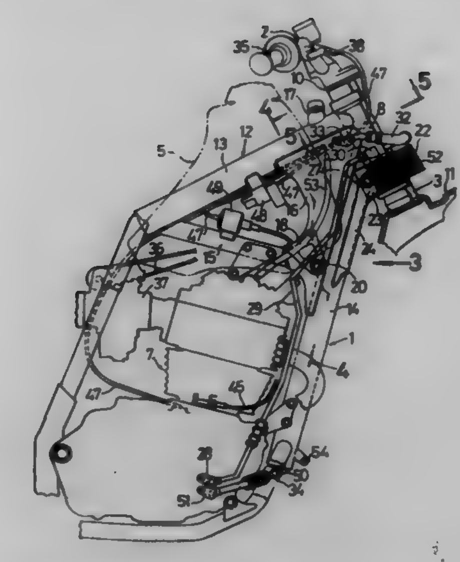

coolant tank for receiving cooled coolant prior to being supplied to said engine.

5,701,854
AXIAL FAN FOR AN INTERNAL COMBUSTION ENGINE
Kurt Hauser, Stuttgart, Germany, assignor to Behr GmbH & Co., Stuttgart, Germany
Continuation of Ser. No. 543,898, Oct. 17, 1995, abandoned.
This application Aug. 26, 1996, Ser. No. 702,799
Claims priority, application Germany, Oct. 26, 1994, 44 38 184.0
Int. Cl.^{6} F04D *29/54*
U.S. Cl. 123—41.49 **23 Claims**

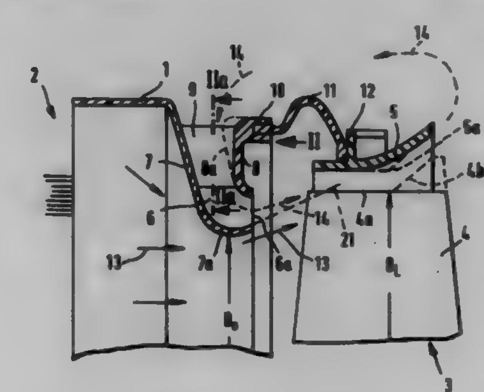

1. Axial fan arrangement for the radiator of an internal combustion engine, comprising:
fan blades, and
a fixed jacket surrounding the fan blades and mounted at a distance from a radiator frame mounted on a vehicle radiator,
wherein an annular bypass channel terminates between the radiator frame and the fan, which bypass channel is open on a pressure side of the fan and whose inside wall facing a main flow guided through the frame has a curvature such that the bypass flow emerging on the intake side of the fan is deflected in the direction of the main flow.

5,701,855
CARTRIDGE FUEL INTERNAL COMBUSTION ENGINE
Katsumi Kurihara, Nagoya, Japan; Shiro Kawamoto, Chandler, Ariz.; John E. Nemazi, Bloomfield Hills, and William G. Conger, Grosse Ile, both of Mich., assignors to Ryobi Limited, Japan
Filed Oct. 4, 1996, Ser. No. 725,452
Int. Cl.^{6} F02B *75/02*
U.S. Cl. 123—73 AD **20 Claims**

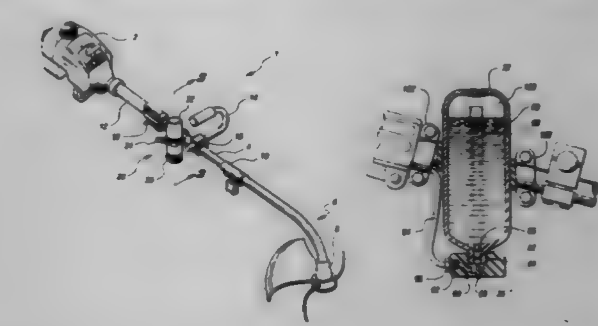

1. A two-cycle engine assembly of the type having a crankcase through which combustible air/fuel/oil mixture flows prior to introduction into a combustion chamber of the engine, the two-cycle engine assembly comprising:
a crankcase assembly having a crankcase housing forming an enclosed crankcase chamber, the crankcase housing surrounding a crankshaft pivotally mounted thereto;
a piston and connecting rod;
a cylinder assembly affixed to the crankcase housing and having a cylinder wall and enclosed end to define a combustion chamber in cooperation with the piston, the piston sealingly cooperating with the cylinder wall and reciprocally movable thereby by the connecting rod which pivotally attaches the piston to the crankshaft causing the piston to reciprocate as the crankshaft rotates, the cylinder assembly having an inlet extending through the cylinder wall to introduce the air/fuel/oil mixture into the crankcase chamber and a transfer passageway connecting the crankcase chamber to the combustion chamber to allow air/fuel/oil mixture to be displaced from the crankcase chamber to the combustion chamber, the cylinder assembly further provided with an exhaust port extending through the cylinder wall to facilitate the removal of post-combustion exhaust gases;
a connector having an inlet for receiving a pressurized cartridge containing the mixture of liquid normally gaseous fuel and oil, and an outlet for the fuel/oil mixture;
a pressure regulator cooperating with the connector outlet for providing the fuel/oil mixture at a controlled pressure;
a carburetor coupled to the inlet of the cylinder assembly for mixing the fuel/oil mixture supplied by the pressure regulator with air at a predetermined ratio throughout a range of flow conditions associated with normal engine operation;
wherein the air/fuel/oil mixture lubricates necessary portions of the two cycle engine assembly prior to introduction into the combustion chamber of the engine.

5,701,856
SEPARATE OILING TYPE TWO CYCLE ENGINE
Toshihiro Nagano, Omiya; Yoshiaki Sato, Uetake; Jun Nishimori, Miyahara, and Fusao Tachibana, Shiraoka, all of Japan, assignors to Fuji Jukogyo Kabushiki Kaisha, Tokyo, Japan
Filed Dec. 2, 1996, Ser. No. 755,898
Claims priority, application Japan, Dec. 28, 1995, 7-342781
Int. Cl.^{6} F01M *33/00*
U.S. Cl. 123—73 AD **2 Claims**

1. A separate oiling type two cycle engine having a diaphragm type float-less carburetor, a fuel tank and a fuel pump, said carburetor including a metering chamber for metering fuel, a needle

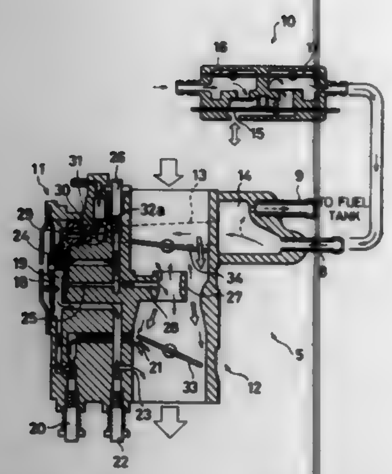

valve for regulating a fuel flow into said metering chamber and a diaphragm for operating said needle valve, comprising:

a fuel reservoir for reserving a fuel;

a fuel supply port provided at said fuel reservoir for supplying said fuel into said fuel reservoir;

a fuel passage for connecting said fuel reservoir with said needle valve;

an oil discharge port provided adjacent to the inlet of said needle valve for discharging a lubricating oil therethrough so as to mix said lubricating oil with said fuel; and

a fuel return port provided at a higher position than said fuel supply port for returning said fuel to said fuel tank.

5,701,857

CYLINDER VALVE OPERATING SYSTEM

Seinosuke Hara, Atsugi, Japan, assignor to Unisia Jecs Corporation, Atsugi, Japan

Filed Oct. 11, 1996, Ser. No. 730,007

Claims priority, application Japan, Oct. 12, 1995, 7-264045

Int. Cl.⁶ F01L *1/26;13/00;* **F02D** *13/06*

U.S. Cl. 123—90.16 **22 Claims**

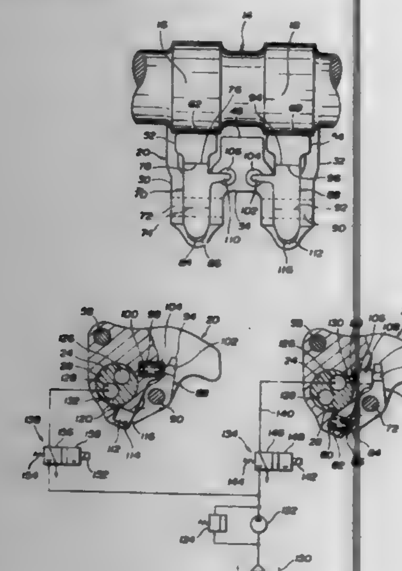

1. A cylinder valve operating system comprising:

at least one cylinder valve;

a camshaft with at least one set of cams including a first cam and a second cam;

a rocker arm pivotable about a rocker arm axis,

said rocker arm having at least one finger engageable with said at least one cylinder valve for actuating said cylinder valve as said rocker arm pivots about said rocker arm axis;

a first free cam follower supported by said rocker arm for pivotable motion about a first free cam follower axis stationary relative to said rocker arm and driven by said first cam for pivotable motion relative to said rocker arm about said first free cam follower axis;

a first lever supported by said rocker arm for rotatable motion about a first lever axis stationary relative to said rocker arm, said first lever having an engaged position wherein said first lever is in driving engagement with said first free cam follower at a portion radially spaced from said rocker arm axis to provide a positive motion connection between said first free cam follower and said rocker arm as said free cam follower pivots, and a disengaged position wherein said first lever is out of driving engagement with said first free cam follower to provide a lost motion between said first free cam follower and said rocker arm as said first free cam follower pivots;

a second free cam follower supported by said rocker arm for pivotable motion about a second free cam follower axis and driven by said second cam for pivotable motion relative to said rocker arm about said second free cam follower axis;

a second lever supported by said rocker arm for rotatable motion about a second lever axis stationary relative to said rocker arm, said second lever having an engaged position wherein said second lever is in driving engagement with said second free cam follower at a portion radially spaced from said rocker arm axis to provide a positive motion connection between said second free cam follower and said rocker arm as said second free cam follower pivots, and a disengaged position wherein said second lever is out of driving engagement with said second free cam follower to provide a lost motion between said second free cam follower and said rocker arm a said second free cam follower pivots;

a first spring resilietly biasing said first lever toward said engaged position thereof;

a second spring resiliently biasing said second lever toward said disengaged position thereof; and

means for driving saint first lever toward said disengaged position thereof against said first spring and said second lever toward said engaged position thereof against said second spring.

22. A cylinder valve operating system comprising:

at least one cylinder valve;

a camshaft with a cam;

a rocker arm pivotable about a rocker arm axis,

said rocker arm having at least one finger engageable with said at least one cylinder valve for actuating said cylinder valve as said rocker arm pivots about said rocker arm axis;

a free cam follower supported by said rocker arm for pivotable motion about a free cam follower axis stationary relative to said rocker arm and driven by said cam for pivotable motion relative to said rocker arm about said free cam follower axis;

a lever supported by said rocker arm for rotatable motion about a first lever axis fixed to said rocker arm, said lever having an engaged position wherein said lever is in driving engagement with said free cam follower at a portion radially spaced from said rocker arm axis to provide a positive motion connection between said free cam follower and said rocker arm as said free follower pivots and a disengaged position wherein said lever is out of driving engagement with said free cam follower to provide a lost motion between said free cam follower and said rocker arm as said free cam follower pivots;

a spring resilietly biasing said lever toward said engaged position thereof; and

means for driving said lever toward said disengaged position thereof against said spring.

5,701,858

VARIABLE VALVE TIMING MECHANISM OF ENGINE

Yoshihito Moriya, Nagoya, Japan, assignor to Toyota Jidosha Kabushiki Kaisha, Toyota, Japan

Filed Feb. 26, 1997, Ser. No. 805,525

Claims priority, application Japan, Feb. 27, 1996, 8-039948

Int. Cl.⁶ F01L *1/344*

U.S. Cl. 123—90.17 **11 Claims**

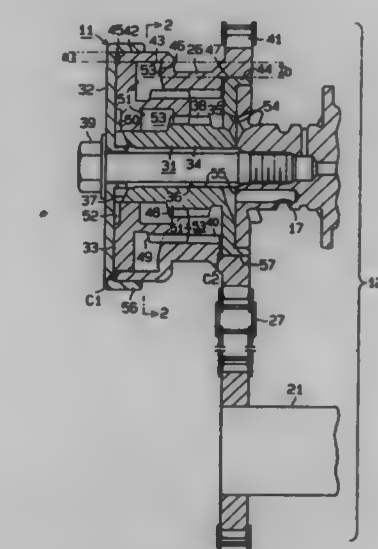

1. An apparatus for adjusting the valve timing of at least one of an intake valve and an exhaust valve of an engine, the apparatus comprising:

a camshaft for actuating one of said intake valve and said exhaust valve;

a rotary member surrounding a distal end of said camshaft, said rotary member having a first surface and a second surface for respectively receiving fluid pressure from opposite directions;

a gear member positioned between said camshaft and said rotary member, said gear member being arranged to move in an axial direction to change the relative rotational relationship between said camshaft and said rotary member;

a first cover fixed to the distal end of the camshaft, wherein said first cover defines a first chamber between the first cover and the gear member for receiving fluid pressure to move the gear member axially;

a second cover fixed to the camshaft, wherein said second cover defines a second chamber between the second cover and the gear member for receiving fluid pressure to move said gear axially;

a first clearance defined between the first surface and the first cover to communicate with the first chamber;

a second clearance defined between the second surface and the second cover to communicate with the second chamber; and

a third surface provided on said rotary member between the first surface and the second surface, said third surface being arranged to receive a force resulting from fluid pressure directed opposite to a force resulting from the fluid pressure received by the second surface, wherein said third surface has an area greater than that of said second surface.

5,701,859

COMPRESSION RELEASE VALVE FOR A COMBUSTION ENGINE

Dag Edlund, Huskvarna, Sweden, assignor to Aktiebolaget Electrolux, Stockholm, Sweden

Filed Jun. 5, 1996, Ser. No. 658,712

Claims priority, application Sweden, Jul. 5, 1995, 9502437

Int. Cl.⁶ F02N *17/08*

U.S. Cl. 123—182.1 **14 Claims**

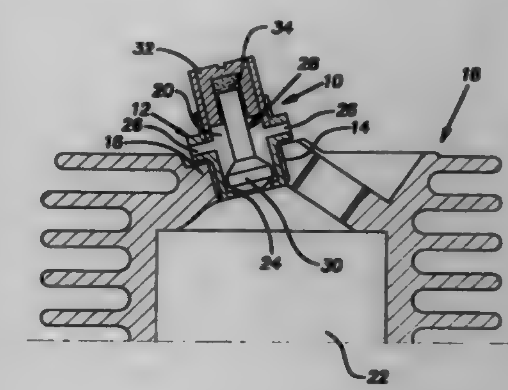

1. A compression release valve (10;10';10";10''') for a combustion piston engine having a cylinder and a combustion chamber, said valve comprising a housing (12;12";12''') separate from the cylinder and having a chamber (20;20";20'''), said housing (12;12";12''') also having at least one hole (26;26''') that connects the chamber (20;20";20''') to a space separated from the combustion chamber (22;22") and a passage (24;24";24''') which connects the chamber (20;20";20''') to the combustion chamber (22;22"), and an element (28;28';28";28''') at least partly received in the chamber and having an end portion directly exposed to the combustion chamber, said element being made out of a material having a different coefficient of thermal expansion than the material that the housing (12; 12";12''') is made out of, and that upon rise of the temperature in the combustion chamber (22;22") a relative displacement between the element (28;28';28";28''') and the housing (12;12"12''') occurs, said displacement sealing the passage (24;24";24''').

5,701,860

DECOMPRESSOR FOR AN INTERNAL COMBUSTION ENGINE

Hiroshi Horiuchi; Yuichi Momose, and Takeshi Ushikoshi, all of Matsumoto, Japan, assignors to Ishikawajima-shibaura Machinery Co., Ltd., Tokyo, Japan

Filed Aug. 5, 1996, Ser. No. 692,214

Claims priority, application Japan, Mar. 26, 1996, HEI 8-070233

Int. Cl.⁶ F02N *3/02;17/08*

U.S. Cl. 123—182.1 **4 Claims**

1. A decompressor for an internal combustion engine for escaping compression pressure in a cylinder, comprising:

a decompression valve disposed vertically with respect to a crank shaft and between a cylinder and a crank casing;

said cylinder having a decompression port and a communicating bore for releasing pressure and said decompression valve connecting said decompression port with said communicating bore;

an operating rod for opening said decompression valve to enable said decompression port at said cylinder and said communicating bore to communicate with each other; and

cams disposed on a side surface of a recoil reel at a recoil starter, and said operating rod having an end portion disposed proximate said cams, so that said recoil reel, when rotating, slides

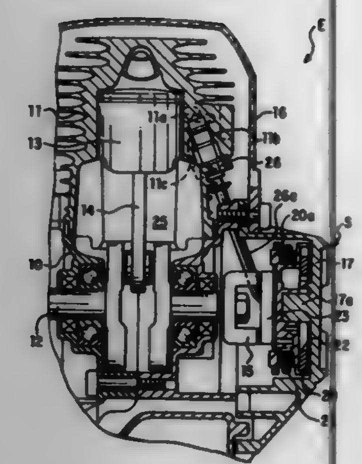

toward said crank shaft, whereby said cams push said operating rod to open said decompression valve.

5,701,861

CYLINDER WITH HYBRID BORE SURFACE

Timothy Alan Hegemier, Eaton, Ohio, and John Dudley Binford, Richmond, Ind., assignors to Dana Corporation, Toledo, Ohio

Filed Jul. 22, 1994, Ser. No. 278,739

Int. Cl.[6] C23F *17/00*

U.S. Cl. 123—193.2 **4 Claims**

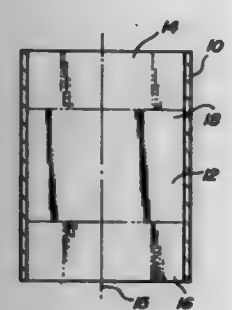

1. An internal combustion engine cylinder bore surface comprising:

a top portion and a bottom portion of the cylinder bore surface both being coarsely honed; and

a mid-portion disposed between the top portion and the bottom portion, said mid-portion being finely honed.

5,701,862

METHOD AND APPARATUS FOR REPLENISHING THE LUBRICATING OIL OF AN INTERNAL COMBUSTION ENGINE

Kiyoshi Inoue, and Masakuni Hirata, both of Kanagawa-ken, Japan, assignors to Nippon Oil Company Limited, Japan

Filed May 16, 1995, Ser. No. 442,098

Claims priority, application Japan, May 26, 1994, 6-112977

Int. Cl.[6] F01M *11/06*

U.S. Cl. 123—196 S **9 Claims**

1. A method of replenishing lubricating oil in an internal combustion engine, comprising the step of continuously supplying, without interruption during operation of the engine, a predetermined quantity of new oil from a reserve tank in which lubricating

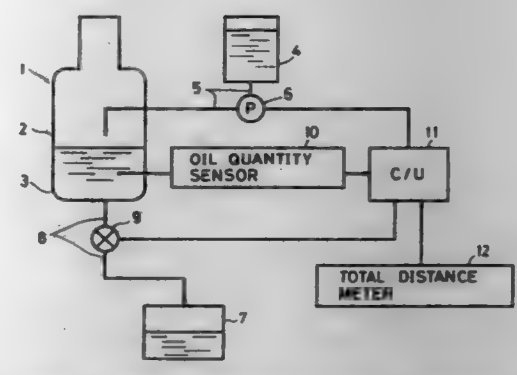

oil is stored to a holding region for lubricating oil circulated to the engine.

5,701,863

AQUEOUS FUEL EMULSION IDENTIFICATION SYSTEM AND ANTI-TAMPERING DEVICE FOR AN INTERNAL COMBUSTION ENGINE

Richard A. Cemenska, Edelstein; Gerald N. Coleman, Peoria, and James E. Sibley, Metamora, all of Ill., assignors to Caterpillar Inc., Peoria, Ill.

Filed Jan. 3, 1997, Ser. No. 778,928

Int. Cl.[6] F02B *77/00*

U.S. Cl. 123—198 D **25 Claims**

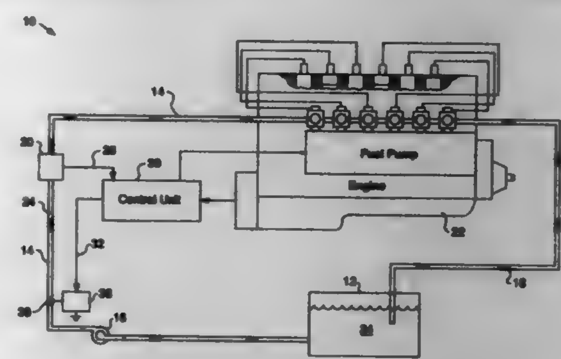

1. An anti-tampering device for preventing the use of selected fuels in an internal combustion engine adapted to use an aqueous fuel emulsion, said anti-tampering device comprising:

a fuel identification sensor adapted to detect selected characteristics of the fuel in a fuel delivery system of said engine;

a control unit responsive to said fuel identification sensor and adapted to differentiate between said aqueous fuel emulsion and fuels other than said aqueous fuel emulsion and produce a signal that disables said engine when said fuel identification sensor identifies said fuel as being other than said aqueous fuel emulsion.

5,701,864

ENERGY TRANSFORMATION METHOD AND ITS SYSTEM FOR PISTON RECIPROCATING CYCLE

Hiroyasu Tanigawa, and Kazunaga Tanigawa, both of 428-35, Enami, Okayama-shi, Okayama-ken, Japan

Filed Feb. 28, 1996, Ser. No. 608,148

Int. Cl.[6] F02B *19/04*

U.S. Cl. 123—290 **13 Claims**

1. A method of energy transformation using a piston-reciprocating cycle, comprising the steps of:

compressing air in a cylinder having an end and an axis, by a piston sliding toward the end of the cylinder where a recessed bore and a shoulder portion are formed, said recessed bore

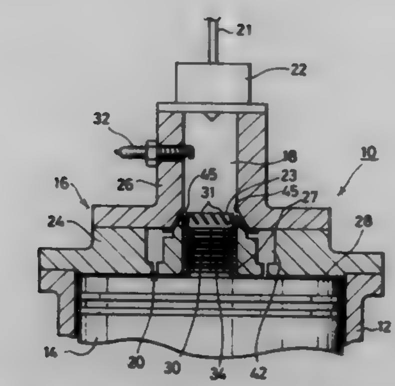

being formed concentrically with the cylinder, said shoulder portion having a one-way air-path leading to the recessed bore, said piston having a projecting portion adapted to be fitted into said recessed bore;

further compressing the air toward top dead center (TDC) wherein the projecting portion of the piston is inserted into the recessed bore so as to highly compress the air in the recessed bore, into which the air flows via the one-way air-path in a direction oblique to the cylinder axis and away from the cylinder;

injecting fuel into the recessed bore in a direction toward the piston to cause turbulence in cooperation with oblique air flow through the one-way air-path, where a fuel mixture of the fuel and the compressed air is formed;

igniting the fuel mixture to cause combustion in the recessed bore, wherein combustion of the fuel mixture is conducted at a substantially constant volume, wherein the combustion pressure is maximized after TDC;

allowing the combustion gas to expand and push the piston, generating an exhaust gas; and

discharging the exhaust gas outside the cylinder.

5,701,865

METHOD OF ADJUSTING IDLE SPARK FOR AN INDIVIDUAL CYLINDER OF AN INTERNAL COMBUSTION ENGINE

Christopher P. Thomas, West Bloomfield; Jay C. McCombie, Rochester Hills; Gregory T. Weber, Commerce Twp.; Jeffery C. Ehlers, Davisburg, and Dennis A. Soltis, Goodrich, all of Mich., assignors to Chrysler Corporation, Auburn Hills, Mich.

Filed Apr. 26, 1996, Ser. No. 639,865

Int. Cl.[6] F02M *3/00*

U.S. Cl. 123—339.11 **19 Claims**

1. A method of adjusting idle spark for an individual cylinder of an internal combustion engine comprising the steps of:

determining a crankshaft acceleration for an individual cylinder of an internal combustion engine;

determining an average acceleration error for the individual cylinder based on the determined crankshaft acceleration;

determining an adaptive spark advance for the individual cylinder based on the determined average acceleration error;

determining a new spark advance for the individual cylinder based on the determined adaptive spark advance and a nominal spark advance; and

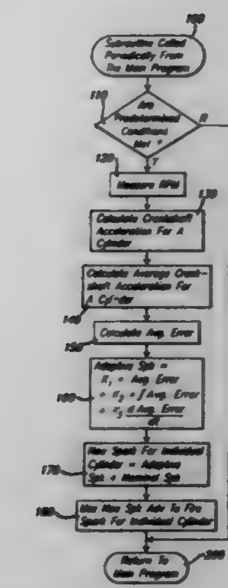

adjusting idle spark for the individual cylinder based on the new spark advance for the individual cylinder.

5,701,866

MALFUNCTION DIAGNOSIS DEVICE FOR ENGINE SPEED CONTROLLER

Yasuo Sagisaka, Kosaki, and Yoshihiko Hirata, Kariya, both of Japan, assignors to Denso Corporation, Kariya, Japan

Filed Dec. 20, 1996, Ser. No. 771,291

Claims priority, application Japan, Dec. 22, 1995, 7-335078

Int. Cl.[6] F02D *39/02*

U.S. Cl. 123—339.15 **19 Claims**

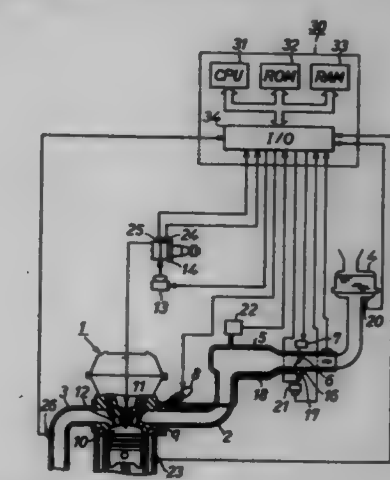

1. A malfunction diagnosis device for an engine speed controller provided with first and second air quantity adjusting valves in an engine intake system wherein quantity of intake air to an engine is controlled in accordance with opening and closing operation of said air quantity adjusting valves, said device comprising:

first air quantity controlling means for driving said first air quantity adjusting valve in a predetermined control region so that a target engine speed is obtained;

second air quantity controlling means for driving said second air quantity adjusting valve in continuation of said first air quantity adjusting valve in a case wherein a control quantity of said first air quantity adjusting valve due to said first controlling means has deviated from said control region; and

malfunction diagnosing means for determining a control quantity of said second air quantity adjusting valve due to said second controlling means and, when said control quantity is

not in a predetermined region, inferring that a malfunction has occurred on said first air quantity adjusting valve side.

5,701,867

APPARATUS FOR CONTROLLING THE SPEED OF AN ENGINE

Kouichi Mizutani, Seto; Takehiko Tanaka; Kenya Maruyama, both of Toyota; Masanori Senda, Nagoya; Katsunno Takeuchi, Aichi-ken, and Toru Sato, Chita, all of Japan, assignors to Toyota Jidoshi Kabushiki Kaisha, Toyota, Japan

Filed Jun. 3, 1996, Ser. No. 659,968

Claims priority, application Japan, Jun. 14, 1995, 7-147867

Int. Cl.⁶ F02D *41/16*

U.S. Cl. 123—339.16 **27 Claims**

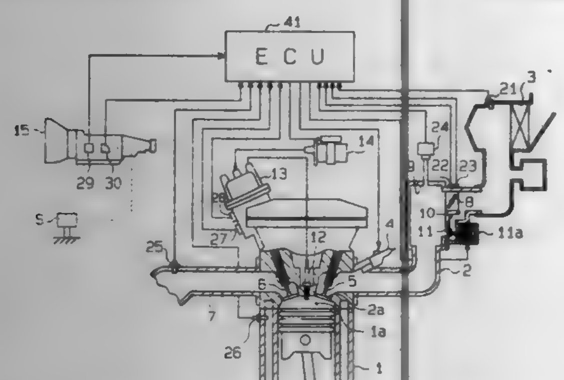

1. An apparatus for controlling the speed of an engine, wherein airflow is supplied to the engine through an air passage means, said apparatus comprising:

valve means located in the air passage means to control the airflow to the engine;

detecting means for detecting an engine condition;

control means for controlling the airflow amount through the valve means, said control means including computing means for computing a target airflow amount of the valve means based on the detected engine condition and determining means for determining an application of a load to the engine in accordance with a detected load;

said control means being arranged to operate according to at least a first mode and a second mode, said first mode being selected when the engine is running, said second mode being selected when the engine is idling;

said first mode being programmed to converge the airflow amount through the valve means to the target airflow amount; and

said second mode being programmed to increase the airflow amount through the control valve to a predetermined degree based on the application of the load to the engine, said increased amount of the airflow being attenuated to a predetermined magnitude at a rate that is determined based on a rate of change of the engine speed.

5,701,868

METHOD AND APPARATUS FOR CONTROLLING THE IGNITION TIMING OF AN INTERNAL COMBUSTION ENGINE

Naoki Tomisawa, Kanagawa-ken, Japan, assignor to Unisia Jecs Corporation, Kanagawa-ken, Japan

Continuation of Ser. No. 544,352, Oct. 17, 1995, abandoned. This application Jan. 10, 1997, Ser. No. 783,291

Claims priority, application Japan, Oct. 20, 1994, 6-255097

Int. Cl.⁶ F02P *5/15*

U.S. Cl. 123—424 **6 Claims**

1. A method of controlling an ignition timing of an internal combustion engine, including the steps of:

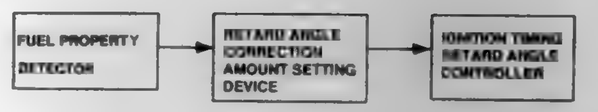

detecting a property of a fuel supplied to the internal combustion engine incorporating an exhaust gas purification catalytic converter in an exhaust passage and generating a corresponding first signal;

determining a retard angle setting amount corresponding to the first signal;

controlling an ignition device to set an ignition timing retard angle of the engine, during a predetermined interval after engine start-up, using a retard angle correction amount selected in correspondence with the determined retard angle setting amount;

adjusting the retard angle correction amount to a progressively smaller value the heavier the detected property of the fuel, and to a progressively larger value the lighter the detected property of the fuel, and

setting the retard angle correction amount to a level at which there is an increase in hydrocarbon amount generation in the exhaust gas; to thereby accelerate catalytic converter activity.

5,701,869

FUEL DELIVERY SYSTEM

Alan David Richardson, Ann Arbor; Paul Timothy Early, Brighton; Larry Thomas Brown, Dearborn; Walter Joseph Ortmann, Ypsilanti, and Edward Albert Bos, Ann Arbor, all of Mich., assignors to Ford Motor Company, Dearborn, Mich.

Filed Dec. 13, 1996, Ser. No. 764,380

Int. Cl.⁶ F02M *37/04*

U.S. Cl. 123—497 **18 Claims**

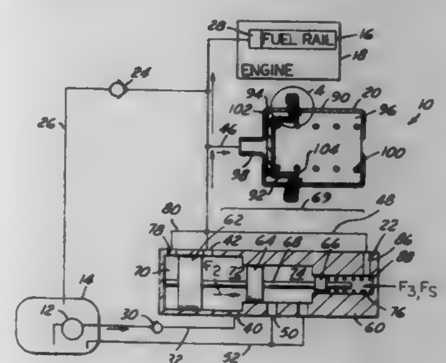

1. A fuel delivery system for delivering fuel from a fuel tank to an internal combustion engine, with said system comprising:

a fuel pump disposed within the fuel tank for supplying fuel to said system;

an accumulator communicating with said fuel pump and the engine for storing a volume of fuel under pressure; and,

a fuel pump control means for controlling the output of fuel flow from said fuel pump, with said fuel pump control means being responsive to the pressure in said system such that when the pressure in said system is increasing and is between a first predetermined threshold and a second predetermined threshold, said fuel pump control means causes said fuel pump to supply fuel to both the engine and said accumulator and when the pressure in the system is above said second predetermined threshold, said fuel pump control means causes said accumulator alone to supply fuel to the engine, with said fuel pump control means defining a hysteresis such that, when the pressure in said system is decreasing and is between said second predetermined threshold and said first predetermined threshold, said fuel pump control means causes said accumulator to continue to supply fuel to the engine and when the pressure in the system is below said first predetermined threshold, said fuel pump control means causes said fuel pump to immediately supply fuel to both the engine and said accumulator.

5,701,870

PROGRAMMABLE FUEL INJECTOR CURRENT WAVEFORM CONTROL AND METHOD OF OPERATING SAME

Paul C. Gottshall, Washington, and Paul M. Young, Peoria, both of Ill., assignors to Caterpillar Inc., Peoria, Ill.

Filed Apr. 15, 1996, Ser. No. 632,046

Int. Cl.⁶ H01H *47/32;* **F02D** *41/30*

U.S. Cl. 123—490 **2 Claims**

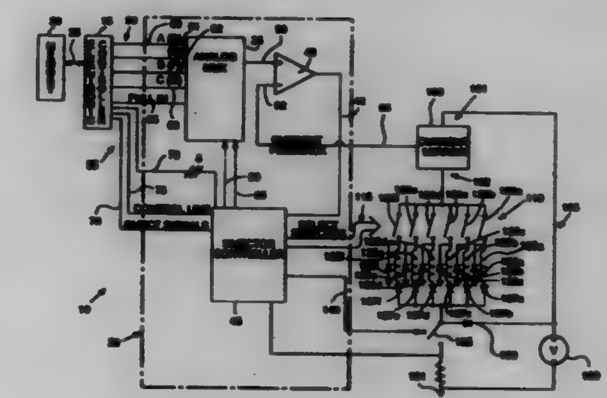

1. An apparatus for variably controlling an injection current waveform to a fuel injector on a compression ignition engine, said apparatus comprising:

an electronic controller, said electronic controller producing at least one desired current waveform parameter and a control signal;

a memory device associated with said electronic controller;

a control circuit connected to said electronic controller and receiving said desired current waveform parameter and said control signal;

wherein said control circuit is capable of producing a plurality of injection current waveforms corresponding to a plurality of fuel injectors and control circuit produces one of said plurality of injection current waveforms responsive to said desired current waveform parameter and said control signal;

a first desired current waveform parameter;

a second desired current waveform parameter;

a multiplexer receiving said first and second desired current waveform parameters;

an application specific integrated circuit (injector controller) receiving said control signal and producing a multiplexer control signal;

said control circuit receiving a current feedback signal corresponding to current flowing through a fuel injector; and

said injector controller producing a multiplexer control signal causing said multiplexer to output said second desired current waveform parameter in response to said current feedback signal indicating a current corresponding to said first desired current waveform parameter.

5,701,871

FUEL SUPPLY CONTROL SYSTEM FOR INTERNAL COMBUSTION ENGINES

Hiroki Munakata; Yoichi Nishimura; Hiroshi Kitagawa, and Shusuke Akazaki, all of Wako, Japan, assignors to Honda Giken Kogyo Kabushiki Kaisha, Tokyo, Japan

Filed Dec. 19, 1995, Ser. No. 575,070

Claims priority, application Japan, Dec. 20, 1994, 6-335048; Feb. 24, 1995, 7-061782

Int. Cl.⁶ F02D *41/06;41/14*

U.S. Cl. 123—491 **5 Claims**

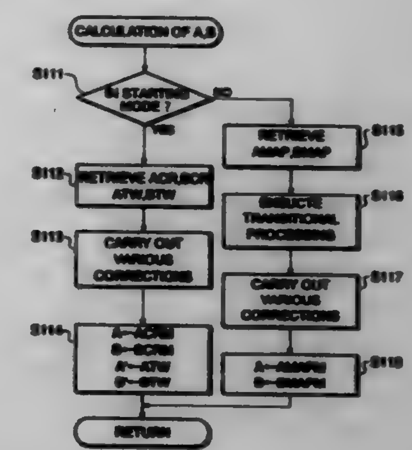

1. A fuel supply control system for an internal combustion engine having an intake passage having an inner wall surface, at least one fuel injection valve, and at least one combustion chamber, comprising:

required fuel amount-calculating means for calculating a required amount of fuel to be supplied into said at least one combustion chamber of said engine, based on operating conditions of said engine;

starting completion-determining means for determining whether starting of said engine has been completed;

first parameter-calculating means for calculating a first parameter as a parameter representative of fuel adherence characteristics of said inner wall surface of said intake passage, based on operating conditions of said engine before completion of starting of said engine;

second parameter-calculating means for calculating a second parameter as said parameter representative of said fuel adherence characteristics, based on operating conditions of said engine after completion of starting of said engine;

fuel amount-calculating means for calculating a first amount of fuel which is injected by said at least one fuel injection valve and directly drawn into said at least one combustion chamber and a second amount of fuel which is carried off from said inner wall surface of said intake passage into said at least one combustion chamber, based on said first parameter or said second parameter;

fuel injection amount-calculating means for correcting said required amount of fuel calculated by said required fuel amount-calculating means, based on said first amount of fuel and said second amount of fuel to calculate an amount of fuel to be injected by said at least one fuel injection valve;

driving means for driving said at least one fuel injection valve to inject fuel in said amount of fuel calculated by said fuel injection amount-calculating means into said intake passage; and

third parameter-calculating means for calculating a third parameter as said parameter representative of said fuel adherence characteristics for use in the calculation by said fuel-amount calculating means immediately after completion of starting of said engine, based on operating conditions of said engine detected before completion of starting of said engine.

5,701,872
VERTICAL ENGINE

Junichi Kaku, and Masaichi Yamada, both of Iwata, Japan, assignors to Sanshin Kogyo Kabushiki Kaisha, Hamamatsu, Japan

Filed Nov. 9, 1995, Ser. No. 556,065
Claims priority, application Japan, Nov. 9, 1994, 6-300350
Int. Cl.⁶ F02M *37/04;* **F01M** *9/10*
U.S. Cl. 123—495 **33 Claims**

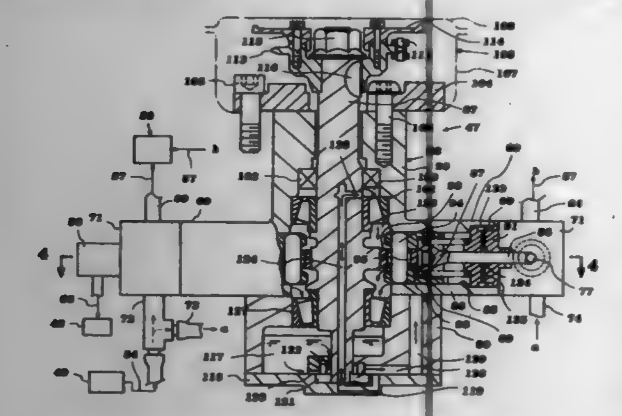

1. A fuel injected internal combustion engine having an output shaft rotatable about a vertically extending output shaft axis and driven by the combustion within the engine, a high pressure piston pump driven by a rotatable pump driving shaft journaled for rotation about a vertically extending pump drive axis and extending parallel to said engine output shaft axis, pump drive means for driving said pump drive shaft from said engine output shaft, and a lubricant pump driven off one end of said pump drive shaft for pumping lubricant to the elements of said high pressure pump.

5,701,873
CONTROL DEVICE FOR A FILLING-RATIO ADJUSTING PUMP

Wolfgang Schneider, Oberglatt, Switzerland, assignor to Eidgenoessische Technische Hochschule Laboratorium Fuer Verbrennungsmotoren Und Verbrennungstechnik, Zurich, Switzerland

PCT No. PCT/CH94/00215, § 371 Date Jul. 10, 1995, § 102(e) Date Jul. 10, 1995, PCT Pub. No. WO95/13474, PCT Pub. Date May 18, 1995
PCT Filed Nov. 7, 1994, Ser. No. 464,856
Claims priority, application Switzerland, Nov. 8, 1993, 3367/93
Int. Cl.⁶ F02M *37/04;41/00*
U.S. Cl. 123—516 **18 Claims**

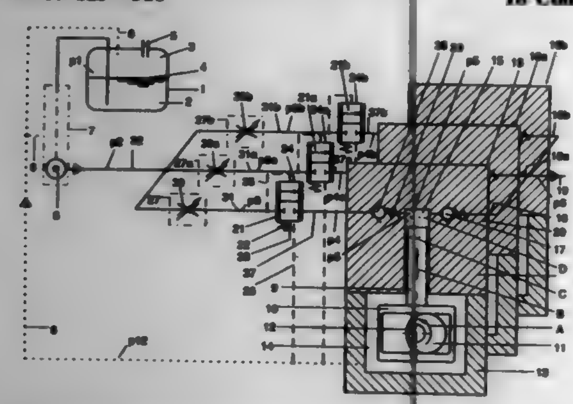

1. Control device for a positive-displacement pump for liquids, said positive-displacement pump having at least one displacement space and drawing-off a liquid to be conveyed from a liquid reservoir having a free liquid surface which is subjectable to a gas pressure, said control device comprising:

an adjustable flow mechanism limiting the flow of liquid to said at least one displacement space, said adjustable flow mechanism being arranged upstream of said at least one displacement space,

at least one throttling 2/2-way valve actuated by a pressure difference and being arranged upstream of said at least one displacement space and downstream of said adjustable flow mechanism, said 2/2-way valve continuously maintaining the pressure in a connecting line between said adjustable flow mechanism and said 2/2-way valve at such a level that emergence of either vapor or dissolved gas from the liquid is prevented, the pressure being at least a pressure of 0.9 bar absolute.

5,701,874
BALANCED VALVE CONTROL MEMBER FOR EXHAUST GAS RECYCLING

Osman Sari, Gravenbroich, and Helmut Blank, Bornheim, both of Germany, assignors to Pierburg AG, Dusseldorf, Germany

Filed Apr. 17, 1996, Ser. No. 633,890
Claims priority, application Germany, Apr. 25, 1995, 295 06 928.7
Int. Cl.⁶ F02M *25/07*
U.S. Cl. 123—571 **5 Claims**

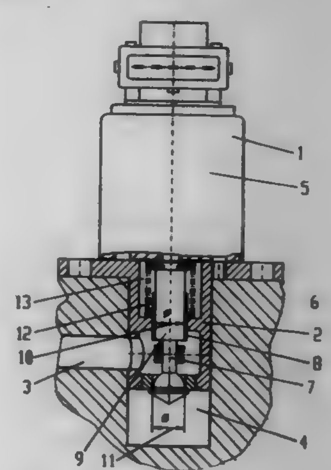

1. A control valve for the recycling of exhaust gas to an internal combustion engine in which the valve controls flow of the exhaust gases from an exhaust gas channel to an air inlet channel of the engine, said control valve comprising a valve member for opening and closing a valve opening between the exhaust gas channel and the air inlet channel, electromagnetic control means acting on said valve member to open said valve opening, spring means biassing said valve member to close said valve opening, a chamber communicating with said air inlet channel, said valve member including a closure portion for closing said valve opening, said valve member further including a balancing section spaced from said closure portion, said closure portion and said balancing section being exposed in said chamber to the air pressure in said inlet channel and being opposed to one another so that forces developed by pressure of the air in said air inlet channel acts on said valve member in opposite directions to balance said valve member.

5,701,875
IGNITION ASSEMBLY ADAPTER SYSTEM

Kit Judd, 705 N. Arizona Ave, Wilcox, Ariz. 85643

Filed Oct. 25, 1996, Ser. No. 738,401
Int. Cl.⁶ F02P *29/004*
U.S. Cl. 123—595 **7 Claims**

1. An Ignition Assembly Adaptel System permitting the use of an ignition assembly on a combustion engine having a camshaft,

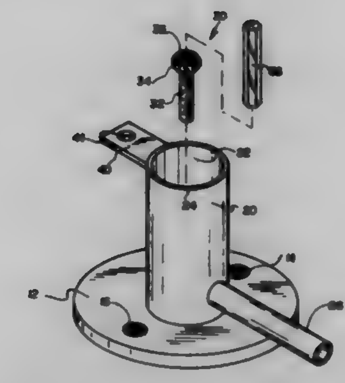

said ignition assembly being of the type having an ignition distributor with a cylindrical mounting portion housing a rotor, said adapter system comprising:

an ignition assembly support for supporting an ignition distributor in a position external to a said combustion engine, said ignition assembly support comprising an adapter base plate and a sleeve member fixedly united together for mounting on the exterior of a combustion engine at a location adjacent to the camshaft of said combustion engine, said sleeve member having an interior passage for receiving the cylindrical mounting portion of an ignition distributor, said adapter base plate having an annular aperture therethrough and opening into the interior passage of said sleeve member, and

a drive assembly for transferring rotational motion of the camshaft of said combustion engine to an ignition distributor received in the sleeve member of said ignition assembly support, said drive assembly being mountable to an end of said camshaft for rotation therewith and being connectable to the rotor in the cylindrical mounting portion of said ignition distributor such that said drive assembly transmits rotation of said camshaft to the rotor of said ignition distributor.

5,701,876
MISFIRE DETECTING APPARATUS FOR INTERNAL COMBUSTION ENGINE

Shingo Morita; Wataru Fukui, both of Tokyo, and Shuichi Wada, Kobe, all of Japan, assignors to Mitsubishi Denki Kabushiki Kaisha, Tokyo, Japan

Filed Nov. 1, 1996, Ser. No. 742,893
Claims priority, application Japan, Jun. 10, 1996, 8-147538
Int. Cl.⁶ F02P *11/00*
U.S. Cl. 123—630 **2 Claims**

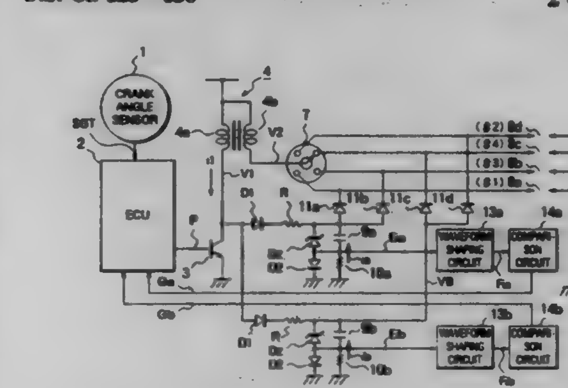

1. A misfire detecting apparatus for an internal combustion engine including a plurality of engine cylinders, comprising:

crank angle sensor means for generating a crank angle signal with a pulse edge corresponding to a reference crank angle position in synchronism with rotation of said internal combustion engine;

spark plugs mounted in said engine cylinders, respectively;

an ignition coil for applying a high firing voltage to said spark plugs for igniting an air-fuel mixture within the associated engine cylinders, respectively;

a plurality of high-voltage diodes connected to first ends of said spark plugs, respectively, for applying a bias voltage to said spark plugs with a same polarity as that of the firing voltage;

bias voltage supplying means for applying a bias voltage to said spark plugs by way of said high-voltage diodes;

ion current detecting means including said bias voltage supplying means for detecting ion currents flowing through said spark plugs under application of said bias voltage immediately after ignition control, to thereby output ion current detection signals for said cylinders, respectively; and

an electronic control unit for driving said ignition coil on the basis of said crank angle signal and determining an occurrence of a misfire event in said internal combustion engine on the basis of said ion current detection signal,

wherein said ion current detecting means includes:

first ion current detecting circuit means for detecting ion currents for engine cylinders belonging to a first cylinder group; and

second ion current detecting means for detecting ion currents for engine cylinders belonging to a second cylinder group;

wherein engine cylinders belonging to the respective first and second cylinder groups are selected so as not to be controlled in succession for ignition; and

said electronic control unit being adapted to use the ion current detection signal derived from the ion current detection circuit means provided in association with the cylinder group which includes the engine cylinder currently subjected to ignition control.

5,701,877
HEATER CONTROLLER FOR AN AIR-FUEL RATIO SENSOR

Keiichiro Aoki, Susono, Japan, assignor to Toyota Jidosha Kabushiki Kaisha, Aichi, Japan

Filed Oct. 25, 1996, Ser. No. 736,818
Claims priority, application Japan, Dec. 6, 1995, 7-318133
Int. Cl.⁶ F02D *41/00;* **F02M** *23/00;25/00*
U.S. Cl. 123—697 **18 Claims**

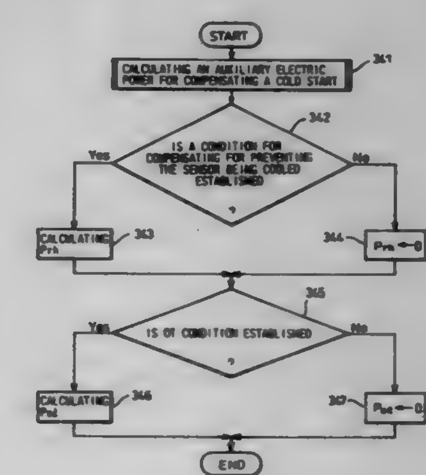

1. A heater controller to control an electric power supplied to a heater for heating an air-fuel ratio sensor which detects an air-fuel ratio of an internal combustion engine, comprising:

an engine condition detecting means for detecting an operating condition of the engine;

a resistance determining means for determining a resistance of the heater;

a storing means for storing the resistance determined by said resistance determining means as a stored resistance when it is determined that the temperature of the heater is stable based

on the operating condition of the engine determined by said engine condition detecting means;
an electric power increasing means for increasing an electric power supplied to the heater in accordance with a current resistance of the heater determined by said resistance determining means and the stored resistance stored in said storing means during a warm up of the sensor after a start of the engine; and
a limiting means for limiting an interval for supplying the electric power increased by said electric power increasing means within a predetermined fixed interval so that the temperature of the heater does not exceed a fixed upper limit temperature in spite of a variation in the heater.

5,701,878

TOY GUN HAVING A TRIGGER ASSEMBLY FOR AIMING AND LAUNCHING A PROJECTILE FROM A FLEXIBLE APPENDAGE

Michael A. Moore, Cincinnati, Ohio; David R. Griffin, Morning View, Ky., and Jeffery Dubose, Cincinnati, Ohio, assignors to Hasbro, Inc., Pawtucket, R.I.

Filed May 23, 1996, Ser. No. 652,373

Int. Cl.⁶ F41B *11/14*

U.S. Cl. 124—67 **13 Claims**

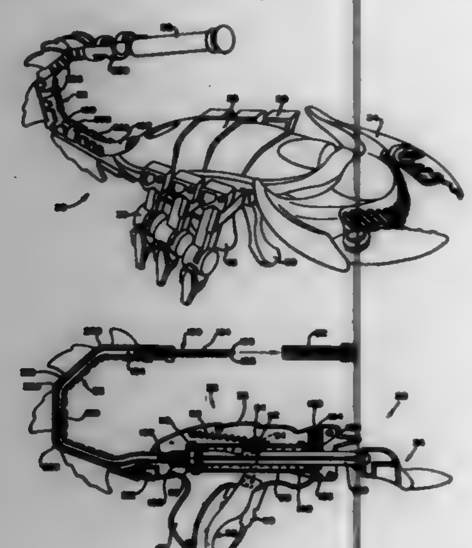

1. A toy gun for launching projectiles with compressed gas, comprising:
a housing defining an internal space;
a trigger pivotally joined to the housing and having means for being pulled;
pressure means for releasing compressed gas in response to the trigger being pulled, the pressure means mounted in the internal space of the housing;
a flexible hose having a proximate end fixed to the pressure means for receiving compressed gas from the pressure means and for transferring the compressed gas to a distal end of the flexible hose positioned outside of the housing to launch a projectile; and
means for bending the flexible hose in response to the trigger being pulled.

5,701,879

COMPRESSED AIR GUN WITH SINGLE ACTION PUMP

Lonnie G. Johnson, Smyrna, and John Applewhite, Atlanta, both of Ga., assignors to Johnson Research & Development Company, Inc., Smyrna, Ga.

Continuation-in-part of Ser. No. 223,559, Apr. 6, 1994, Pat. No. 5,553,598. This application May 26, 1995, Ser. No. 451,480

Int. Cl.⁶ F41B *11/00*

U.S. Cl. 124—69 **16 Claims**

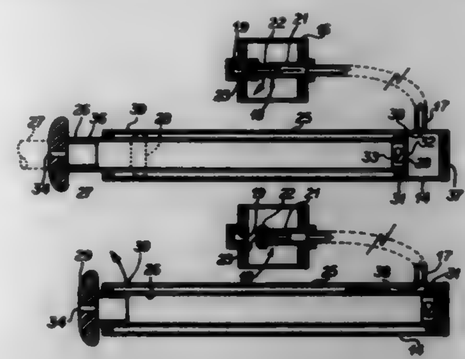

11. A compressed air launcher comprising:
a launch tube;
a pressure actuatable release valve for controlling the flow of pressurized air into said launch tube;
a conduit having a first end coupled to said pressure actuatable release valve and a second end opposite said first end; and
a combination air pump and triggering means comprising an elongated cylinder having a first end and a second end, a port spaced from said first end and spaced from said second end, said port being coupled in fluid communication with said second end of said conduit, and a plunger having a seal movably mounted in said elongated cylinder for reciprocal movement, whereby movement of the seal within the cylinder in a direction from the first end toward the port causes air in the cylinder and the conduit to be pressurized thereby maintaining the pressure actuatable valve closed, and whereby movement of the seal within the cylinder past the port and toward the second end causes air in the conduit to be released into the elongated cylinder behind the plunger seal, to cause a pressure drop which actuates the pressure actuatable valve to open.

5,701,880

ARCHERY BOW WITH IMPROVED ADJUSTABLE GRIP

Gary L. Simonds, Gainesville, Fla., assignor to Bear Archery, Inc., Gainesville, Fla.

Continuation of Ser. No. 541,244, Oct. 12, 1995, Pat. No. 5,615,663. This application Sep. 11, 1996, Ser. No. 712,163

Int. Cl.⁶ F41B *5/00*

U.S. Cl. 124—88 **1 Claim**

1. An archery bow having a riser handle portion and an

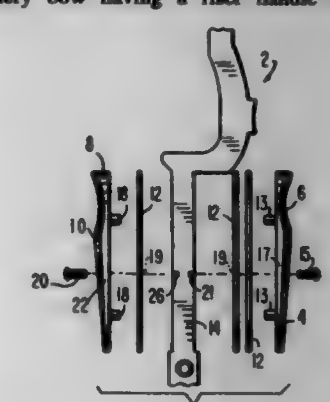

improved laterally adjustable grip affixed to said riser handle

portion, said grip comprising a thumb side plate and a finger side plate, said thumb side plate and finger side plate moveable with respect to each other, and means located between the thumb side plate and the finger side plate for varying the distance therebetween.

5,701,881

FIRE GRATE HAVING FLUCTUATIONAL PROFILE IN CIRCUMFERENTIAL DIRECTION THEREOF

Kwangsoo Hyun, 8-30 Nhoyoó-1-Dong, Kwangjin-Gu Seoul, 143-301, Rep. of Korea

Continuation-in-part of Ser. No. 373,959, Jan. 17, 1995, abandoned, which is a division of Ser. No. 128,071, Sep. 28, 1993, abandoned. This application Sep. 28, 1995, Ser. No. 535,407

Int. Cl.⁶ F23H *1/02*

U.S. Cl. 126—163 R **10 Claims**

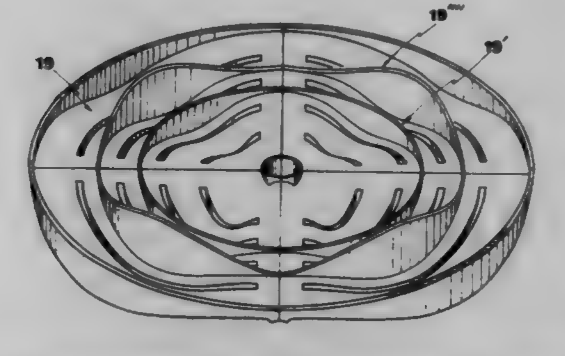

1. A circular planform stationary fire grate having a multiplicity of ash discharge openings thereon, contour of fire grate upper surface in circumferential direction and in radial direction of the fire grate being of fluctuational profile and of fluctuation-free profile respectively.

5,701,882

FIREPLACE WITH CERAMIC FIBER DUCT

Mark R. Champion, Huntington, Ind., assignor to The Majestic Products Company, Huntington, Ind.

Continuation of Ser. No. 202,785, Feb. 28, 1994, abandoned. This application Dec. 15, 1995, Ser. No. 573,571

Int. Cl.⁶ F24B *1/188*

U.S. Cl. 126—523 **13 Claims**

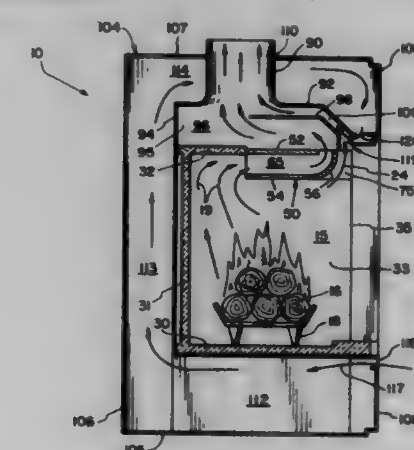

1. A fireplace for combusting fuel comprising:
a combustion chamber whereat the fuel is combusted and products of combustion are created, said combustion chamber comprising an opening through which combustion air is introduced;
a flue positioned in a first direction from said combustion chamber for exhausting the products of combustion; and
a ceramic fiber duct, positioned directly above said combustion chamber and below said flue, for promoting additional combusting of unburned products of combustion, said ceramic fiber duct comprising a products of combustion inlet, a products of combustion outlet, and at least one internal passageway connecting said inlet and said outlet and defining a flow path for the products of combustion, wherein along at least a portion of its length said internal passageway is defined by surfaces consisting of ceramic fiber in direct contact with the products of combustion, and wherein at least a segment of said at least one internal passageway is arranged such that said flow path defined thereby is oriented at an angle from said first direction, said ceramic fiber duct comprising a lower baffle defining at least a portion of the bottom of said at least one internal passageway, and wherein said duct is positioned above said combustion chamber such that said lower baffle is exposed within said combustion chamber to be heated by the products of combustion.

5,701,883

OXYGEN MIXING IN A BLOWER-BASED VENTILATOR

Bernie F. Hete, Trafford, and James D. Srock, Valencia, both of Pa., assignors to Respironics, Inc., Pittsburgh, Pa.

Filed Sep. 3, 1996, Ser. No. 707,185

Int. Cl.⁶ A61M *16/00*

U.S. Cl. 128—204.26 **20 Claims**

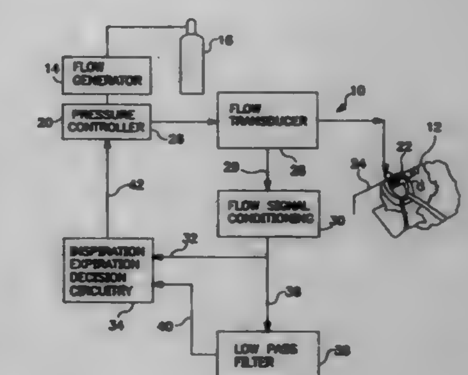

1. Apparatus for delivering pressurized gas to the airway of a patient, said apparatus comprising:
gas flow generator means for providing a flow of said gas;
conduit means for delivery of said gas flow to the airway of the patient;
said conduit means comprising at least one primary conduit portion for carrying a primary flow of said gas towards the airway of said patient;
means for providing supplemental oxygen to the patient concomitantly with the provision of the primary flow of said gas to the patient;
said means for providing supplemental oxygen comprising:
means for introducing a flow of supplemental oxygen into said at least one primary conduit portion of said apparatus;
means for metering the flow of supplemental oxygen into said at least one primary conduit portion of said apparatus;
said metering means comprising means for regulating the flow of supplemental oxygen into said at least one primary conduit portion of said apparatus as a function of at least one of:
the magnitude of said primary flow in said at least one main conduit portion; and
the direction of said primary flow in said at least one main conduit portion.

5,701,884
SNORKEL WITH STROBE LIGHT
Evangelos Fondas, Seafoam, West Bay Street, Cable Beach, and Christopher Papageorge, Sandy Port, Clipper Island, Apt. A-1, West Bay Street, both of Nassau, Bahamas
Filed Mar. 14, 1996, Ser. No. 615,896
Int. Cl.^{6} B63C *11/16*
U.S. Cl. 128—201.11 **19 Claims**

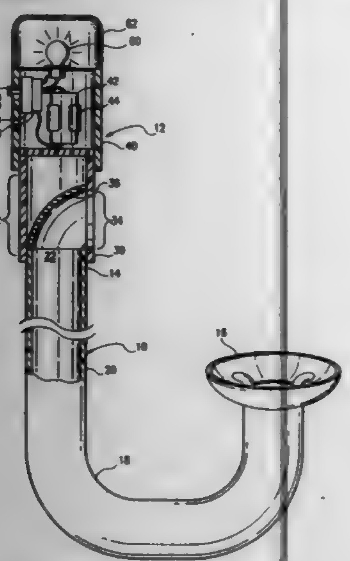

1. A snorkel with a strobe light comprising:
a snorkel having a generally U-shaped mouthpiece portion leading directly to a rigid, elongated tubular body portion and an open, tubular top region, said tubular top region adapted to be raised above water level to permit an intake and exhaust of air from a diver;
a strobe light mounted in a casing;
a controllable strobe circuit electrically coupled to said strobe light and mounted within said casing, said strobe circuit including a battery and a user actuatable switch, said strobe circuit electrically driving said strobe light to provide periodic illumination;
said casing mounted on an upper region of said tubular, rigid body portion of said snorkel about said tubular top, whereby said casing, strobe light and strobe circuit are mounted onto the top of said snorkel.

5,701,885
PRESSURE EQUALIZING SCUBA DIVER MOUTHPIECE AND ACCESSORIES
Kelly T. Hale, 1613 Newfield La., Austin, Tex. 78703
Filed Dec. 30, 1994, Ser. No. 366,745
Int. Cl.^{6} A62B *7/00*
U.S. Cl. 128—201.26 **5 Claims**

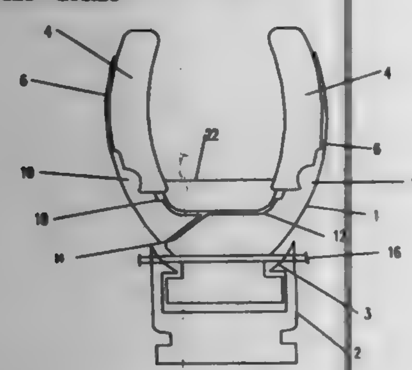

1. A pressure equalizing scuba diver mouthpiece with accessories comprising:
a) a body means;
b) a breathing air passageway through said body means;
c) a fluid equalizing passageway and a first connector means on a first end of said passageway and a second connector means on a second end of said passageway integrally formed in said body means;
d) a first and a second sealed pressure equalizing retention arm means with each extending between the molars on each side of a mouth and partially filled with fluid and connected to said first and said second connector means to allow said fluid to flow only between said first sealed retention arm means and said second sealed retention arm means;
e) a tooth positioning offset means in said body means acting to position a user's lower incisor teeth behind users' upper incisor teeth when said scuba divers mouthpiece is held in an in-use position in said users' mouth.

5,701,886
TREATMENT NON-REBREATHER ASSEMBLY AND METHOD FOR DELIVERING OXYGEN AND MEDICATION
Sadie Ryatt, 5759 Willis Ave., Van Nuys, Calif. 91411
Filed Aug. 7, 1995, Ser. No. 511,745
Int. Cl.^{6} A61M *15/00*
U.S. Cl. 128—203.12 **16 Claims**

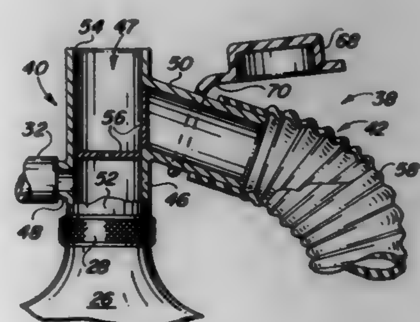

1. A treatment non-rebreather assembly for the separate and simultaneous administration of oxygen and an aerosolized medication to a patient, comprising:
(a) a hollow connector tube including
(i) a transport body having one end and an opposite end and one side portion and another side portion, said transport body defining a passageway extending between said one and opposite ends,
(ii) an oxygen inlet port formed at said one side portion of said body,
(iii) an aerosolized medication inlet port formed at said another side portion of said body,
(iv) a reservoir port formed at said one end of said body for connecting to a reservoir bag,
(v) a patient outlet port formed at said opposite end of said body for connecting to means for attaching said assembly to a patient, and
(vi) a single one-way inhalation valve located across said passageway of said transport body between said oxygen inlet port and said medication inlet port and adapted to limit direction of flow to being from said reservoir port toward said patient outlet port;
(b) means for connecting said medication inlet port to an external source of an aerosolized medication to permit the delivery of the aerosolized medication to a patient through said connector tube; and
(c) means for closing said medication inlet port during the non-use of said port.

5,701,887
BREATHING CIRCUIT HEATING ELEMENT RETAINER
Andre M. Rustad, Etiwanda, and Paul O. Davison, Costa Mesa, both of Calif., assignors to Baxter International Inc., Deerfield, Ill.
Filed Mar. 18, 1996, Ser. No. 618,277
Int. Cl.^{6} A61M *16/00*
U.S. Cl. 128—204.17 **8 Claims**

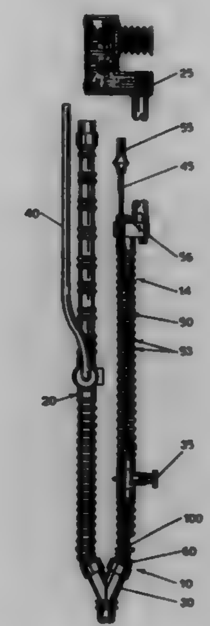

1. In a breathing circuit having a tube, said tube defining a lumen, said lumen having an interior surface and a convolute section, and a heating element wire interior to said interior surface; a heating element retainer comprising a body having a plurality of ports defined therein and adapted to be inserted and retained in said convolute section and support said heating element wire by means of said plurality of ports defined within said body, said ports being further adapted to grip said element and hold same in a substantially fixed relationship with said body, and radially extensive deformable members extensive from said body with said members including deformable supports; said supports being substantially conterminous with said interior surface.

5,701,888
AUTOMATIC AIR WASH FOR ANESTHESIA SYSTEM
Robert Q. Tham, and Todd Keitel, both of Dane County, Wis., assignors to Ohmeda Inc., Liberty Corner, N.J.
Filed Aug. 5, 1996, Ser. No. 692,248
Int. Cl.^{6} A61M *16/00*
U.S. Cl. 128—204.21 **13 Claims**

1. An anesthesia system for providing anesthesia to a patient, the combination comprising;
a patient circuit adapted to be connected to the patient, said patient circuit introducing gases into the patient and for receiving gases exhaled by the patient,
means to introduce a plurality of gases, including at least fresh air and oxygen, at a controllable flow into the patient circuit,
an oxygen fuel cell in said patient circuit monitoring the concentration of oxygen in the patient circuit and generating a signal indicative of the oxygen concentration,
means to generate a signal indicating the termination of the use of the anesthesia system on the patient; and

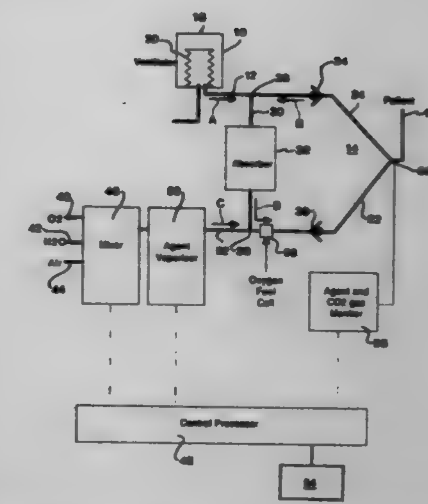

means responsive to said signal to provide a flow of only said fresh air to wash said oxygen fuel cell.

5,701,889
OXYGEN BREATHING CONTROLLER HAVING A G-SENSOR
Joseph S. Danon, Los Angeles, Calif., assignor to Conax Florida Corporation, St. Petersburg, Fla.
Continuation-in-part of Ser. No. 929,701, Aug. 12, 1992, Pat. No. 5,348,001. This application Feb. 10, 1994, Ser. No. 194,248
Int. Cl.^{6} A63B *9/02*
U.S. Cl. 128—204.29 **18 Claims**

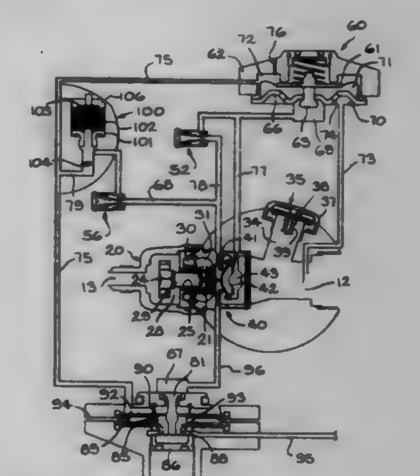

1. An oxygen breathing controller for supplying an oxygen containing fluid to a user, which comprises:
a) a first stage regulator means provided to regulate a pressure of the oxygen containing fluid from a source pressure to a reduced, set point pressure that is somewhat greater than an inhalation pressure suitable for inhalation by the user, the first stage regulator means comprising:
i) a first stage inlet chamber for receiving the oxygen containing fluid at the source pressure; and
ii) a first stage outlet chamber for providing the oxygen containing fluid at the set point pressure, wherein when the pressure in the first stage outlet chamber is at the set point pressure, fluid flow communication between the first stage inlet chamber and the first stage outlet chamber is closed, and wherein when the pressure in the first stage outlet chamber is below the set point pressure, fluid flow communication between the first stage inlet and outlet chambers is

present to raise the pressure in the first stage outlet chamber back to the set point pressure; and

b) a second stage regulator means in fluid flow communication with the first stage regulator means and disposed downstream thereof, the second stage regulator means comprising:

i) a second stage inlet chamber in fluid flow communication with the first stage outlet chamber;

ii) a second stage outlet chamber disposed downstream of the second stage inlet chamber and leading to a breathing apparatus for supplying the user's breathing requirements;

iii) a diaphragm means separating the second stage inlet chamber and the second stage outlet chamber; and

iv) means for selectively creating a pressure differential across the second stage inlet chamber and the second stage outlet chamber for flexing the diaphragm means between a closed, no flow position and an open, flow position to provide the breathable oxygen containing fluid to the user upon the occurrence of an inhalation event, wherein with an altitude below an altitude threshold and a G-force below a G-force threshold and upon the occurrence of the inhalation event, the diaphragm means is in the open, flow position with the inhalation pressure transmitted to the second stage inlet chamber to thereby cause the pressure in the first stage outlet chamber to fall below the set point pressure so that fluid flow communication between the first stage inlet and outlet chambers is present to admit additional oxygen containing fluid into the first stage outlet chamber to thereby raise the pressure therein back to the set point pressure to close off communication between the first stage inlet chamber at the source pressure and the first stage outlet chamber at the set point pressure while fulfilling the user's breathing requirements, and wherein when the user's breathing requirements increase due to an increase in either the altitude above the altitude threshold or an increase in the G-forces above the G-force threshold or both, the means for selectively creating the pressure differential across the second stage inlet chamber and the second stage outlet chamber of the second stage regulator means flexes the diaphragm means between the closed, no flow position and the open, flow position at an increased pressure differential in response to the greater of an altitude dependent breathing requirement and a G-force dependent breathing requirement, respectively.

5,701,890
REGULATOR PROVIDED WITH A MOVABLE DEFLECTOR
Nino Pietrelli, Sori, Italy, assignor to HTM Sport S.p.A., Italy
Filed Aug. 19, 1996, Ser. No. 699,499
Claims priority, application Italy, Aug. 18, 1995, GE95A0090
Int. Cl.[6] A62B *7/00*
U.S. Cl. 128—205.24 **5 Claims**

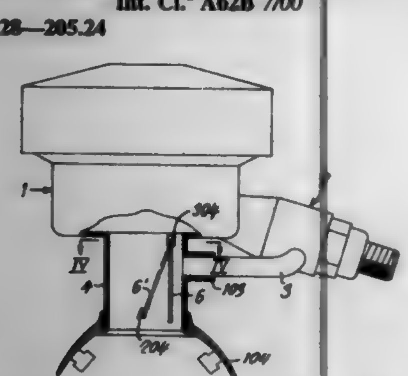

1. A regulator for a second stage underwater breathing apparatus comprising:
a box-like shaped regulator control chamber;
a flexible diaphragm at one end of said chamber;
a mouthpiece tube at another end of said chamber;
a mouthpiece connected to said mouthpiece tube;
an air supply connected to a side of said chamber, said air supply including an air valve, and a demand lever in said chamber connected to said valve and in engagement with said diaphragm to open and close said valve, and an adjustable air deflector hinged by one end to said chamber at a position near said air valve and extending by a free end into said mouthpiece tube, the air deflector being mounted to swing from a first position in which it partially closes the opening of said mouthpiece tube to increase cross section of the air flow passage from the air supply to the mouthpiece during the inhalation phase, and a second position in which the opening of the mouthpiece tube is at a maximum size to increase cross section of the air flow passage from the mouthpiece to a discharge valve in the exhalation phase.

5,701,891
OLEFIN HEAT AND MOISTURE EXCHANGER
Allen W. Groenke, Bloomington, Minn., assignor to Nellcor Puritan Bennett Incorporated, Pleasanton, Calif.
Filed Dec. 1, 1995, Ser. No. 566,086
Int. Cl.[6] A61M *16/10;* **B01D** *27/07;29/07*
U.S. Cl. 128—205.29 **21 Claims**

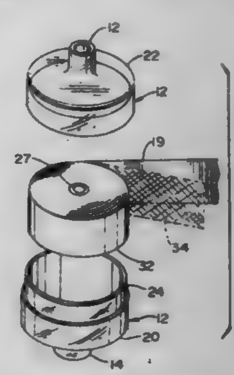

1. A heat exchanger medium, comprising:
an elongated sheet including spunbonded olefin, the sheet having a longitudinal axis, a front surface and back surface, and a first edge and a second edge generally parallel to the longitudinal axis of the sheet, wherein the sheet includes a desiccant.

5,701,892
MULTIPURPOSE FACE MASK THAT MAINTAINS AN AIRSPACE BETWEEN THE MASK AND THE WEARER'S FACE
Adrien Janis Bledstein, 5459 S. Hyde Park Blvd., Chicago, Ill. 60615-5801
Filed Dec. 1, 1995, Ser. No. 565,964
Int. Cl.[6] A62B *7/10;18/08;23/02*
U.S. Cl. 128—206.19 **17 Claims**

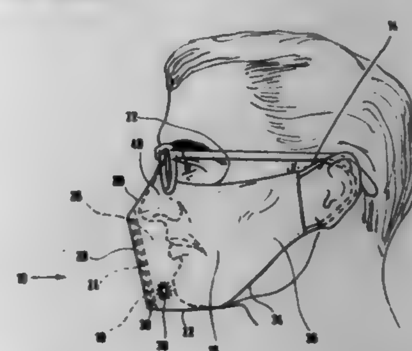

1. A multipurpose face mask for covering the nose and mouth of a wearer comprising:

a chamber having two sides connected by a top seam, a bottom seam and a vertical front fold, the top seam extending over the ridge of the nose of the wearer to beyond the tip of the nose of the wearer, the bottom seam extending from in front of the chin of the wearer towards the neck of the wearer, the vertical front fold positioned between the top seam and the bottom seam;
means for fastening the mask to the head of the wearer; and
means for holding the vertical front fold away from a wearer's nose and mouth, said means comprising a rigid support attached to the vertical front fold and extending substantially along its entire length.

5,701,893
DISPOSABLE FACE MASK
John J. Kern, Fullerton; Richard L. Stein, El Toro, and J. Preston Wildrick, Riverside, all of Calif., assignors to Survivair, Inc., Santa Ana, Calif.
Filed May 20, 1996, Ser. No. 650,466
Int. Cl.[6] A62B *7/10;18/08;18/02;23/02*
U.S. Cl. 128—206.24 **21 Claims**

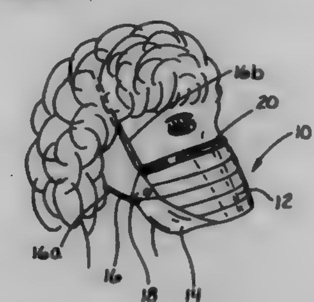

1. A face mask for filtering airborne materials comprising:
an upper portion adapted for placement generally over a user's nasal area;
a lower portion adapted for placement generally over a user's oral area;
ribs extending longitudinally of said mask along said upper portion;
a pair of ears at either end of the mask having openings therethrough;
a strap means for passing through the openings of said ears to secure the mask to a user's face;
layers of plastic material forming the upper and lower portions that have been ultrasonically bonded together, and
said ribs being formed by ultrasonically bonding said layers of plastic material through their cross-section to a thickness less than the combined layers of plastic material.

5,701,894
MODULAR PHYSIOLOGICAL COMPUTER-RECORDER
Isaac R. Cherry, Mission Viejo; John A. Bachman, Dana Point; David T. Tanaka, San Juan; Hangyick So, Corona, and Raphael Henkin, Dana Point, all of Calif., assignors to Del Mar Avionics, Irvine, Calif.
Filed Nov. 9, 1995, Ser. No. 555,546
Int. Cl.[6] A61B *5/00*
U.S. Cl. 128—630 **33 Claims**

1. A computer-recorder for ambulatory, real time data analysis and data accumulation of a variety of biophysical, biomechanical and physiological somatic data of a patient, comprising:
a central processor unit (CPU) assembly housing having a plug and play micro processor module (MPM) disposed therein;
at least one, self-contained, plug and play power module (PM) insertable into said CPU;
at least one plug and play system operation and data-analysis, control program module (CPM) insertable into said CPU and coupled to said MPM;

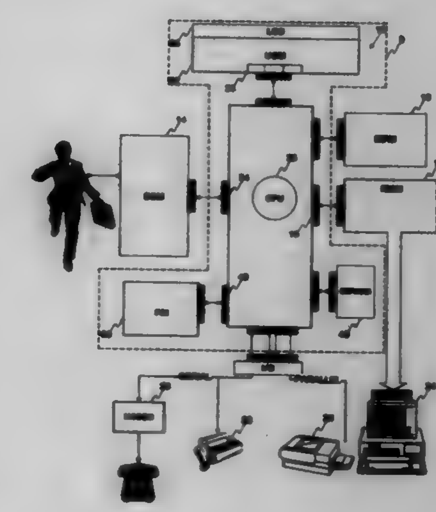

at least one set of plug and play biophysical, biomechanical and physiological sensors for attachment to said patient;
at least one plug and play, data input signal conditioner module (SCM) insertable into said CPU assembly housing and coupling at least one set of said sensors to said MPM;
at least one plug and play data storage removable memory module (RMM) insertable into said CPU assembly housing and coupled to said MPM;
at least one interactive user control module (UCM) disposed on said assembly housing and coupled to said MPM; and
at least one plug and play output port disposed in said CPU assembly housing and coupled to said MPM.

5,701,895
SUBCUTANEOUS ELECTRICAL DATA PORT
David Prutchi, Lake Jackson, and Roy Simmons, III, Houston, both of Tex., assignors to Sulzer Intermedics Inc., Angleton, Tex.
Continuation of Ser. No. 557,688, Nov. 13, 1995, abandoned.
This application Oct. 7, 1996, Ser. No. 726,550
Int. Cl.[6] A61B *5/00*
U.S. Cl. 128—630 **10 Claims**

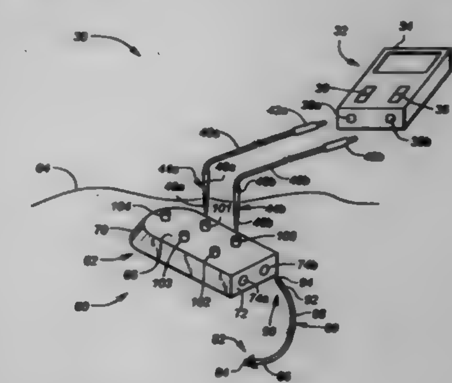

1. An implantable data port, comprising:
an outer housing formed of a nonconductive, biologically compatible material and being subcutaneously implantable within a subject;
means for electrically connecting an implantable lead to said data port and for receiving an electrical signal;
a control circuit within said housing electrically connected to said means for connecting a lead;
a current loop transmitter connected to said control circuit, said current loop transmitter being adapted to produce a current proportional to said electrical signal;

a ground electrode electrically connected to said control circuit and exposed through said biologically compatible material; and

at least one access port on said housing and electrically connected to said current loop transmitter for connecting said data port to a current loop receiver.

5,701,896

Patent Not Issued For This Number

5,701,897

ULTRASONIC DIAGNOSIS APPARATUS AND IMAGE DISPLAYING SYSTEM

Akihiro Sano, Otawara, Japan, assignor to Kabushiki Kaisha Toshiba, Kanagawa-ken, Japan

Division of Ser. No. 130,834, Oct. 4, 1993, Pat. No. 5,622,174. This application Jan. 5, 1996, Ser. No. 583,501

Claims priority, application Japan, Oct. 2, 1992, 4-265052; Mar. 31, 1993, 5-074448; Apr. 1, 1993, 5-075965; Apr. 7, 1993, 5-080931

Int. Cl.⁶ A61B *8/06*

U.S. Cl. 128—661.09 **24 Claims**

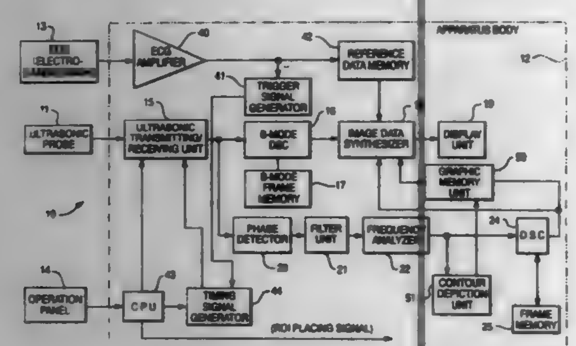

1. An image displaying system in which data of two-dimensionally mapped velocities of movement of a tissue in a cross section of an object being examined are provided frame by frame, the system comprising:

means for specifying a point in the data of two-dimensionally mapped velocities of each frame and for providing parameters denoting a plurality of angular positions extending radially from said specified point in said data of two-dimensionally mapped velocities;

means for converting frame by frame the data of two-dimensionally mapped velocities of each frame into image data of movement of the tissue in accordance with said specified point and said parameters denoting said radial lines; and

means for displaying a plurality of image data produced over the plurality of frames as a more than one-dimensional image including two axes, one axis corresponding to an elapsing-time order over the plurality of frames and the other axis representing values of the image data along at least one of said radial lines extending from said specified point.

5,701,898

METHOD AND SYSTEM FOR DOPPLER ULTRASOUND MEASUREMENT OF BLOOD FLOW

Dan R. Adam, Haifa, Israel; Kenneth M. Kempner; Mark A. Vivino, both of Bethesda, Md.; Eben E. Tucker, Silver Spring, Md., and Michael Jones, Bethesda, Md., assignors to The United States of America as represented by the Department of Health and Human Services, Washington, D.C.

Continuation of Ser. No. 300,718, Sep. 2, 1994, abandoned. This application May 21, 1996, Ser. No. 651,022

Int. Cl.⁶ A61B *8/06*

U.S. Cl. 128—661.09 **20 Claims**

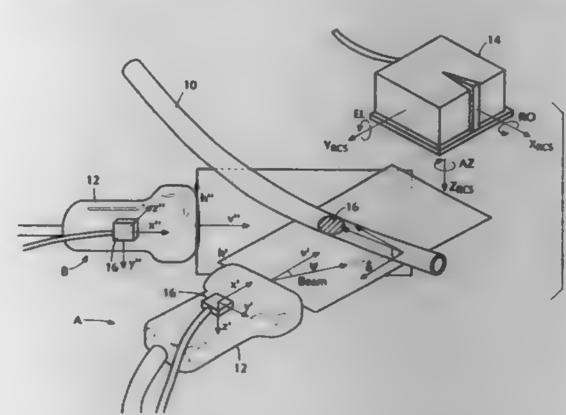

1. A Doppler ultrasound apparatus for measuring flow in a localized region within a vessel, said flow having an associated velocity, said apparatus comprising:

an ultrasound probe for generating and detecting an incident and reflected ultrasound signal, respectively, said incident and reflected ultrasound signal including a Doppler ultrasound signal;

a position and orientation system which generates an orientation and position signal for said ultrasound probe; and

a processor which provides a corrected ultrasound signal representing said flow, based on said orientation and position signal, and on said ultrasound signal to generate a three-dimensional representation of said vessel for determining a three-dimensional flow direction for said localized region within the vessel;

wherein said corrected ultrasound signal compensates for errors in measuring said flow that are due to angular misalignment of said ultrasound probe relative to said velocity of said flow in said localized region.

5,701,899

PERFLUOROBUTANE ULTRASOUND CONTRAST AGENT AND METHODS FOR ITS MANUFACTURE AND USE

Thomas R. Porter, Omaha, Nebr., assignor to The Board of Regents of the University of Nebraska, Lincoln, Nebr.

Continuation-in-part of Ser. No. 252,286, Jun. 1, 1994, Pat. No. 5,567,415, which is a continuation-in-part of Ser. No. 301,146, Sep. 6, 1993, Pat. No. 5,578,291, which is a continuation of Ser. No. 113,415, Aug. 27, 1993, abandoned, which is a continuation-in-part of Ser. No. 60,751, May 12, 1993, abandoned, which is a continuation-in-part of Ser. No. 57,298, May 4, 1993, abandoned. This application May 31, 1995, Ser. No. 454,853

Int. Cl.⁶ A61B *8/00;* **A61K** *49/00*

U.S. Cl. 428—662.02 **15 Claims**

11. A method for myocardial, renal or hepatic opacification comprising the steps of:

(a) obtaining an echo contrast agent solution which comprises:

(i) forming an aqueous albumin-dextrose solution containing between about a two-fold and about an eight-fold dilution of between about 5% to about 50 by weight dextrose and between about 2% to about 10% by weight human serum albumin, and

(ii) sonicating said mixture to form microbubbles the gaseous content of which contain an amount of perfluorocarbon gas which is effective for visually detecting myocardial perfusion by echocardiogram following peripheral intravenous injection of said agent into a host;

(b) introducing said echo contrast agent into a host by intravenous injection; and

(c) performing an echo contrast study on said host using a suitable Doppler or ultrasound echo apparatus.

5,701,900

ULTRASONIC TRANSDUCER ORIENTATION SENSING AND DISPLAY APPARATUS AND METHOD

Ramez E. Shehada, and Warren S. Grundfest, both of Los Angeles, Calif., assignors to Cedars-Sinai Medical Center, Los Angeles, Calif.

Filed May 1, 1995, Ser. No. 433,866

Int. Cl.⁶ A61B *8/00*

U.S. Cl. 128—662.03 **28 Claims**

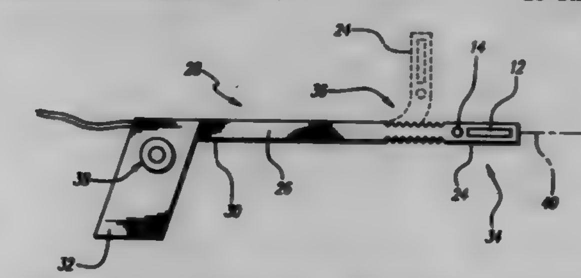

1. An apparatus for providing an indication of an imaging plane of an ultrasonic transducer, comprising:

a sensor that provides an electronic signal representing a spatial orientation of the imaging plane of the ultrasonic transducer;

a display that displays the imaging plane and a symbol indicating the spatial orientation of the imaging plane; and

a processor, associated with the sensor and the display, that processes the electronic signal and generates a signal representing the spatial orientation that causes the display to manipulate the symbol.

5,701,901

ULTRASONIC PROBE WITH BACK AND FORTH SWEEPING ULTRASONIC SOURCE

Paul Lum, Los Altos; Carl Chang, El Cerrito, and Jerry Zawadzki, San Jose, all of Calif., assignors to Hewlett Packard Company, Palo Alto, Calif.

Filed Nov. 26, 1996, Ser. No. 756,385

Int. Cl.⁶ A61B *8/12*

U.S. Cl. 128—662.06 **25 Claims**

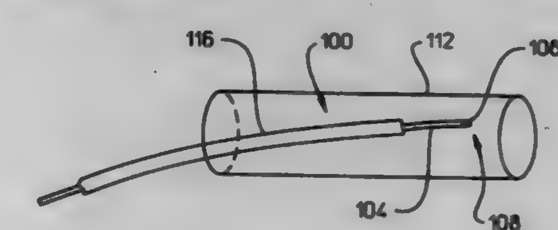

1. Ultrasonic probe for imaging tissues from inside a patient's body cavity having a wall, the ultrasonic probe having a distal end suitable for inserting inside the body cavity and a proximal end opposite the distal end, comprising:

(a) elongated main body portion;

(b) end portion connected distally to the elongated main body portion, comprising:

(i) support means having silicon substrate;

(ii) back and forth pivotable transducer assembly for transmitting an ultrasonic beam, the transducer assembly being supported by the support means and including a base layer connected to the support means via one or more twistable or flexible support arms, a layer of ferromagnetic material above said base layer, and a transducer block with generally flat faces and straight edges on said ferromagnetic layer, said transducer block including a backing layer, a transducer layer on said backing layer, an acoustic matching layer on said transducer layer, a bottom electrode to connect electrically a bottom face of the transducer layer to a conductor which is on a first face of the block, a top electrode to connect electrically a top face of the transducer layer to a conductor on a second face of the block for activating the transducer layer, each of said conductors on said faces of the block being electrically connected for excitation of the transducer layer, said support arms allowing the pivotal motion of the transducer assembly to scan the ultrasonic beam at the wall of the body cavity for imaging: at least one of said bottom electrode and top electrode penetrating the backing layer or the acoustic matching layer; and

(iii) driver in said end portion for driving fie pivotal motion of the pivotable transducer assembly, the driver being located proximate to the transducer assembly such that all driving motions occur proximate to the distal end of the ultrasonic probe.

5,701,902

SPECTROSCOPIC BURN INJURY EVALUATION APPARATUS AND METHOD

Sandor G. Vari, Woodland Hills, and Jean-Michel I. Maarek, Rancho Palos Verdes, both of Calif., assignors to Cedars-Sinai Medical Center, Los Angeles, Calif.

Filed Sep. 14, 1994, Ser. No. 306,118

Int. Cl.⁶ A61B *5/00*

U.S. Cl. 128—664 **15 Claims**

1. Apparatus for evaluating the condition of burned skin at the site of the burn injury to the skin, comprising:

a plurality of light sources, each emitting excitation light having a predetermined wavelength, that is directed at the burn site to produce return light, wherein at least one light source is characterized by a wavelength of sufficient energy to cause fluorescence of certain chemical constituents of the skin and the return light includes fluorescent light produced by constituents present within the skin;

a sensor, responsive to the return light corresponding to each light source, that monitors the return light and generates a plurality of electrical signals based on the intensity of return light within predetermined wavelength bands; and

a processor associated with the sensor, that processes the plurality of electrical signals and determines the condition of the skin at the site of the burn injury.

5,701,903

FLUOROSCOPIC APPARATUS

Hiroshi Sano, and Rensuke Adachi, both of Tokyo, Japan, assignors to Asahi Kogaku Kogyo Kabushiki Kaisha, Tokyo, Japan

Filed Jun. 22, 1995, Ser. No. 493,680

Claims priority, application Japan, Jun. 23, 1994, 6-141474

Int. Cl.⁶ A61B *1/00*

U.S. Cl. 128—665 **6 Claims**

1. A fluoroscopic apparatus in which an object image formed by an objective optical system provided at a front end of an insertion

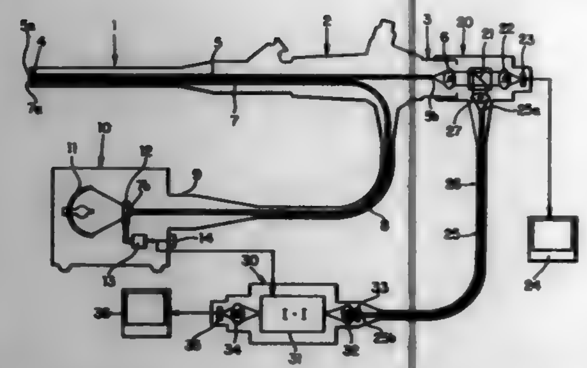

portion of an endoscope is transmitted to an ocular portion through a first bundle of image guiding optical fibers to view the object image, comprising;

an excitation light filter which permits light having a wavelength band for exciting fluorescence from an object to be viewed to pass therethrough, said excitation light filter being retractably inserted in an optical path of illuminating light with which the object is illuminated;

a beam splitter provided in the ocular portion to split the object image transmitted to the ocular portion through said first bundle of image guiding optical fibers into an image for normal observation and an image for fluorescence observation;

a first image pickup device provided for receiving said image for normal observation, said first image pickup device being positioned behind said beam splitter in an optical path for normal observation extending from said beam splitter;

a first image forming lens in said optical path for normal observation disposed between said beam splitter and said first image pickup device, said first image forming lens converging and forming an object image of light transmitted through said beam splitter;

an optical path of the image for fluorescence observation extending from said beam splitter to a second image pickup device;

an image intensifier disposed outside said ocular portion and within said optical path for florescence observation;

a second bundle of image guiding optical fibers provided in said optical path of the image for fluorescence observation to transmit the image from said beam splitter to said image intensifier;

a second image forming lens in said optical path for fluorescence observation disposed between said beam splitter and said image intensifier, said second image forming lens converging and forming an object image of light transmitted through said beam splitter onto a receiving surface of said second bundle of image guiding optical fibers;

a filter for fluorescence observation, provided in the optical path of the image for fluorescence observation to permit light having a wavelength band other than the wavelength band which can pass through the excitation light filter to pass therethrough; and

a second image pickup device positioned in said optical path for fluorescence observation behind said image intensifier to receive an image intensified by said image intensifier.

5,701,904

TELEMEDICINE INSTRUMENTATION PACK

Scott C. Simmons, Houston; John R. Pohl, Friendswood; Terrell M. Guess; Douglas A. Rushing, both of Houston, all of Tex.; Michael P. Caputo, Jr., Hanover, N.H., and Roger D. Billica, Houston, Tex., assignors to Krug International, Houston, Tex.

Filed Jan. 11, 1996, Ser. No. 584,820

Int. Cl.^{6} A61B *5/02*

U.S. Cl. 128—670 **13 Claims**

1. Medical diagnostic apparatus, comprising:

a) a programmable digital computer;

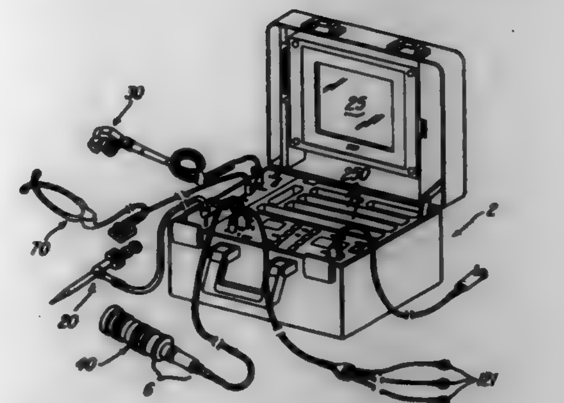

b) audio means for deriving audio signals usable to a physician from selected internal physiological activity of a subject, and delivering the audio signals to the computer;

c) video means for deriving visual images from parts of the subject's physiology, and delivering video signals indicative thereof to the computer;

d) data means for deriving data signals indicative of physiological activity of the subject, and delivering the data signals to the computer; and

e) means for suppressing receipt of ambient noise by the audio means.

5,701,905

GUIDE CATHETER WITH SENSING ELEMENT

Brady Esch, Sunnyvale, Calif., assignor to Localmed, Inc., Palo Alto, Calif.

Filed Nov. 13, 1995, Ser. No. 557,753

Int. Cl.^{6} A61B *5/02*

U.S. Cl. 128—673 **23 Claims**

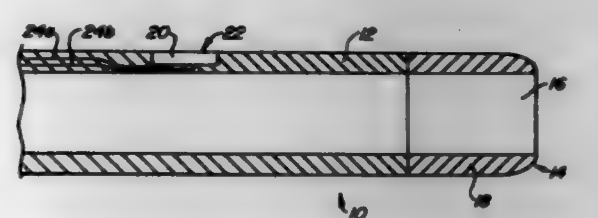

1. In a guide catheter having a distal end suitable for insertion into a vessel in the vasculature of a patient and a proximal end which remains outside the patient, wherein the distal end has a predetermined shape accessing a coronary ostium, the catheter having an outer wall and a lumen defined therein, said lumen being adapted for insertion of an interactive catheter and having an open distal end, the improvement comprising at least one pressure sensing element provided in the outer wall of the guide catheter, wherein an active surface of the sensing element faces away from the direction flow of blood when the catheter is positioned adjacent the coronary ostium.

5,701,906

METHOD AND APPARATUS FOR ACQUIRING AND PROCESSING ELECTROCARDIOGRAPHIC SIGNALS

Paolo Alcidi, Via Gustavo Console 8, 50141 Firenze, and Gino Grassi, Via Pasqui giá Via degli Orti 31, 50019 Sesto Fiorentino, both of Italy, assignors to Paolo Alcidi, Florence, and Gino Grassi, Sesto Fiorentino, both of Italy, a part interest

Filed May 21, 1996, Ser. No. 651,697

Claims priority, application Italy, May 22, 1995, FI91A0111

Int. Cl.^{6} A61B *5/0402*

U.S. Cl. 128—696 **10 Claims**

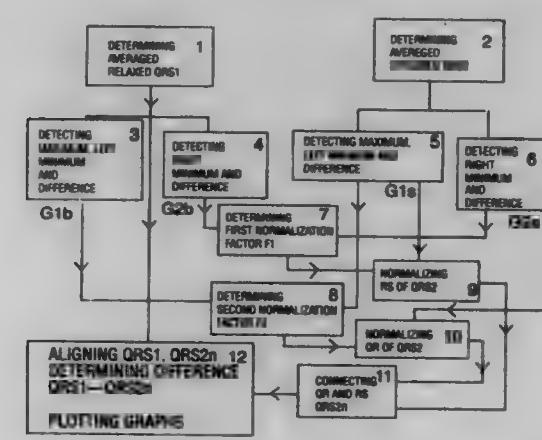

1. A method of acquiring and processing electrocardiographic signals, the method comprising the steps of:

detecting and recording a first basic electrocardiographic waveform of a subject tested under a relaxed condition;

detecting and recording a second electrocardiographic waveform of the subject tested at an end of an induced stress;

comparing said first electrocardiographic waveform with said second electrocardiographic waveform;

detecting a point in time when said second waveform differs from said first waveform by evaluating a time elapsed from a preset initial time.

5,701,907

ELECTROCARDIOGRAPHIC WAVEFORM MONITORING METHOD AND SYSTEM

Peter J. Klammer, Salem, Oreg., assignor to Hewlett-Packard Company, Palo Alto, Calif.

Filed Dec. 16, 1996, Ser. No. 766,072

Int. Cl.^{6} A61B *5/0402*

U.S. Cl. 128—696 **20 Claims**

11. A system for selecting from a plurality of different voltage threshold detectors that detector likely to yield the most reliable data to be utilized in determining whether the electrical activity of a heart is normal or abnormal, said system to be utilized with EKG monitoring devices, and said system comprising:

means for specifying a particular window of time;

means for identifying certain voltage threshold detectors as active during said specified window of time;

means for recording the times at which a threshold of each of said active voltage threshold detectors was exceeded during said specified window of time;

means for, in response to said recorded times, assessing the temporal regularity of how often said threshold of each of said active voltage threshold detectors was exceeded; and

means for, in response to said assessed temporal regularity, designating at least one of said active voltage threshold detectors as likely to yield the most reliable data to be utilized in

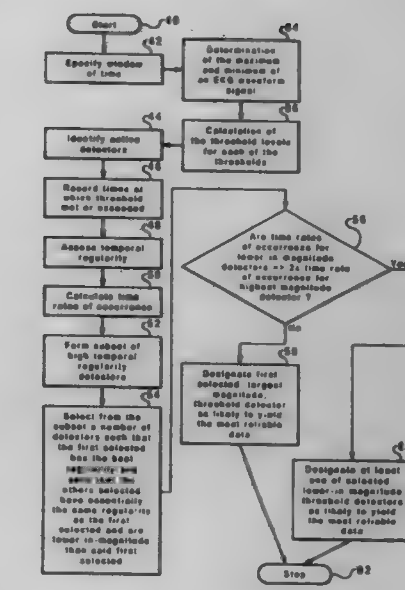

determining whether the electrical activity of the heart is normal or abnormal.

5,701,908

SYSTEM AND METHOD FOR MONITORING AND CONTROLLING THE TEMPERATURE OF A CATHETER-MOUNTED HEATER

Gary D. Carlson, Newport Beach, and Mark Minot, Aliso Viejo, both of Calif., assignors to Baxter International Inc., Deerfield, Ill.

Division of Ser. No. 422,369, Apr. 14, 1995, Pat. No. 5,634,470, which is a continuation-in-part of Ser. No. 268,217, Jun. 29, 1994, Pat. No. 5,636,638. This application Nov. 8, 1996, Ser. No. 747,099

Int. Cl.^{6} A61B *5/028*

U.S. Cl. 128—713 **28 Claims**

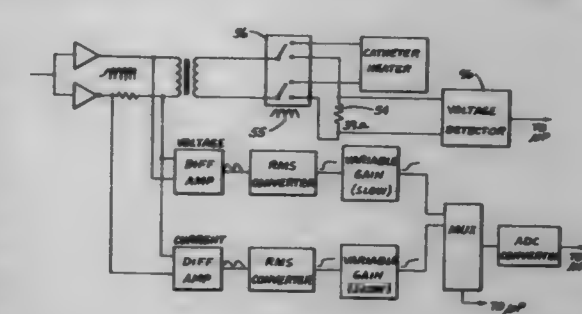

1. A system for monitoring and controlling a temperature of a catheter mounted heating element, comprising:

a thermodilution catheter having a heating element;

a calibration circuit means;

means for controlling the supply of power to the system;

means for switching power between said calibration circuit and the heating element;

means for determining whether power has been supplied to said calibration circuit; and

means responsive to the power determining means to remove power from the system.

5,701,909

MACHINE AND METHOD FOR THE DETERMINATION OF NERVOUS-SYSTEM-GENERATOR PARAMETERS USING LEAD FIELDS

Avner Amir, Ramat-Yishay, Israel; Daniel John Fletcher, San Francisco, and Don Lee Jewett, Mill Valley, both of Calif., assignors to Abratech Corporation, Sausalito, Calif.

Continuation-in-part of Ser. No. 333,475, Nov. 1, 1994, abandoned. This application Jul. 11, 1996, Ser. No. 679,704

Int. Cl.^{6} A61B *5/0476*

U.S. Cl. 128—731 **8 Claims**

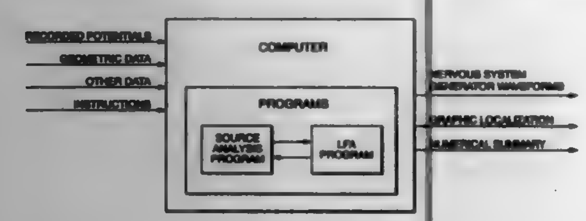

1. A machine comprising a computer for converting electrical recordings of the nervous system into displayed nervous-system-generator parameters using a computational model, said model defined by parameters including mesh points, nodes, elements, shape functions defining the surface across each element, basis functions providing an approximation of electric potential and electric flux density solutions across each element, volumes of interest, electrical generator parameters, and electrical material property data across the volumes of interest, the machine comprising:

a. means for receiving and storing data comprised of electrical recordings at one or more time points from one or more recording channels, said means including at least one recording electrode,

b. means for receiving and storing model data comprised of:
   1. locations and order of the mesh points defining each element,
   2. locations and order of the nodes on each element,
   3. shape functions defining the surface across each element,
   4. basis functions providing an approximation of the electric potential and electric flux density solutions across each element,
   5. electrical material property data across the volumes of interest,
   6. locations of said at least one recording electrode in the model;
   7. initial electrical generator parameters, including initial generator-location;

c. means for computing, using a boundary element method, the electric potentials on nodes of all boundaries, or the electric potentials and electric flux densities on nodes on at least 1 boundary (b_1) encompassing the volumes of interest and electric potentials on nodes on all boundaries ($b_2 \ldots b_n$) within b_1 describing junctions between volumes with different material properties that would occur due to a current of specified magnitude at the location of said at least one recording electrode,

d. means for determining weight function values for said initial generator parameters, from at least one of the electric potentials at said initial generator location or the electric fields at said initial generator location, said electric potentials or electric fields being derived from said electric potentials and/or flux densities computed in subparagraph c,

e. means for determining the electrical generator parameters, and

f. means for displaying said electrical generator parameters determined according to subparagraph e and/or said weight function values according to subparagraph d.

5,701,910

ASPIRATION NEEDLE APPARATUS INCORPORATING ITS OWN VACUUM AND METHOD AND ADAPTER FOR USE THEREWITH

Trevor J. Powles, Chipstead Surrey, United Kingdom, and Mir A. Imran, Palo Alto, Calif., assignors to Advanced Cytometric Inc., Sunnyvale, Calif.

Continuation of Ser. No. 421,064, Apr. 13, 1995, abandoned. This application Aug. 19, 1996, Ser. No. 699,209

Int. Cl.^{6} A61B *5/103*

U.S. Cl. 128—764 **1 Claim**

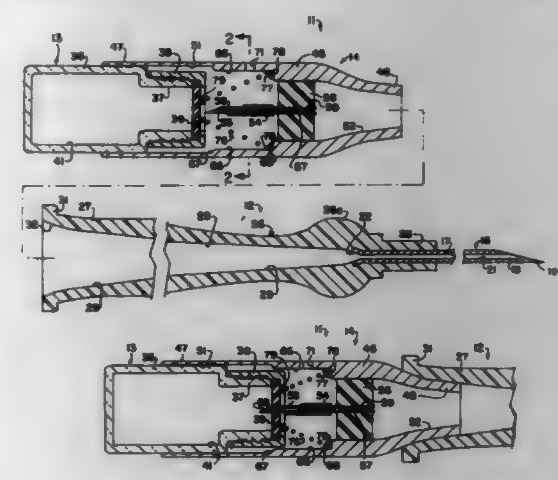

1. An aspiration needle apparatus for collecting cell samples by withdrawing aspirate from tissue in a living body comprising an aspiration needle having proximal and distal extremities and having a flow passage extending from the proximal extremity to the distal extremity, the proximal extremity having a hub formed thereon, said hub having a cell collection chamber therein in communication with the flow passage in the aspiration needle, a vacuum container having an enclosed evacuated space evacuated to a subambient pressure which provides a predetermined volume of evacuated space devoid of a solid or a liquid and devoted solely to providing the desired vacuum and sealed by a penetrable diaphragm providing access to the evacuated space, an adapter mounted on the hub and making a fluid-tight connection therewith, said adapter being formed to receive said vacuum container and receiving said vacuum container, said adapter including needle means carried thereby having a flow passage therein in communication with the flow passage in the aspiration needle, yieldable means carried by the adapter, said adapter and said vacuum container being formed so as to permit relative movement between the adapter and the vacuum container against the force of the yieldable means to cause the needle means to puncture the diaphragm of the vacuum container to connect the evacuated space having a subambient pressure in the vacuum container to the aspiration needle to supply the subambient pressure to the aspiration needle to cause aspirate from the tissue to be drawn into the cell collection chamber.

5,701,911

GUIDE WIRE EXTENSION DOCKING SYSTEM

Kazuo Sasamine, Lemon Grove, and Garry E. Rupp, Santee, both of Calif., assignors to Medtronic, Inc., Minneapolis, Minn.

Filed Apr. 5, 1996, Ser. No. 628,880

Int. Cl.^{6} A61B *5/00*

U.S. Cl. 128—772 **6 Claims**

1. A guide wire extension docking system for angioplasty including a guide wire and an extension wire to facilitate exchanging a balloon dilatation catheter comprising:

(a) a guide wire having a proximal end with a first diameter and a distal end with a second diameter;

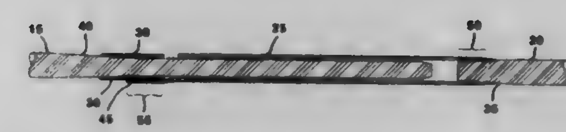

(b) an extension wire having a proximal end with a first diameter and a distal end with a second diameter, the first diameter of the extension wire being equal to the second diameter of the guide wire;

(c) a hypotube having a proximal end, a distal end, an inner diameter and an outer diameter, the outer diameter of the hypotube being equal to the first diameter of the extension wire, the proximal end of the hypotube being permanently affixed to the distal end of the extension wire, the distal end of the hypotube having a tongue extending distally; and

(d) a spring coil with a proximal end, a distal end, an inner diameter and an outer diameter, the outer diameter of the spring coil being equal to the outer diameter of the hypotube, the spring coil having a length approximately twice the length of the tongue, the outer diameter of the spring coil being permanently affixed to the tongue such that the proximal end of the spring coil is adjacent to and axially aligned with the distal end of the hypotube, the inner diameter of the spring coil being dimensioned to slidably fit the first diameter of the guide wire with a frictional fit such that when the first diameter of the guide wire is inserted into the distal end of the spring coil, the guide wire is held in place by frictional engagement with the spring coil.

5,701,912

STEREOPHONIC SYSTEM FOR MINIMALLY INVASIVE SURGERY

Anthony B. Greening, North Vancouver, and Thomas N. Mitchell, Richmond, both of Canada, assignors to International Telepresence Corporation, Vancouver, Canada

Filed Dec. 21, 1995, Ser. No. 576,719

Int. Cl.^{6} A61B *1/02;7/04*

U.S. Cl. 128—773 **9 Claims**

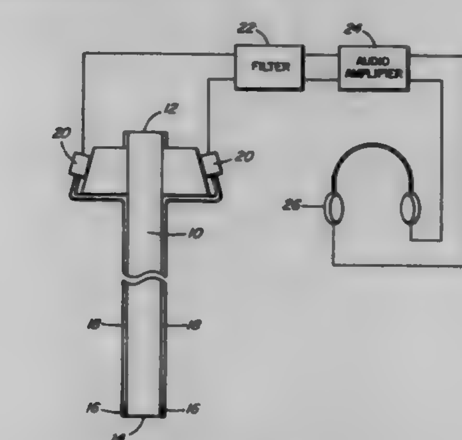

1. An instrument for entering a living body wall for assisting in the performance of minimally invasive surgery, comprising:

a cylindrical member with an internal end for positioning inside the body wall and an external end to remain outside the body wall;

two audio channels on opposing sides of the cylindrical member extending longitudinally from acoustic openings at the internal end to the external end of the cylindrical member;

acoustical diaphragms over the openings at the internal end of the cylindrical member;

a microphone connected to each of the two audio channels at the external end of the cylindrical member, each microphone producing an audio signal from each of the two audio channels;

a stereophonic audio amplifier connected to each microphone of the two audio channels, the amplifier for amplifying the signal from each microphone, and

a stereophonic acoustical system to produce stereophonic sound.

5,701,913

TISSUE SOFTNESS PROBE

Roger W. McPherson; Nigel G. Shrive; Erich Damson; Cyril B. Frank; Fred Lhenen, and Norman S. Schachar, all of Calgary, Canada, assignors to University Technologies International Inc., Calgary, Canada

Filed Feb. 3, 1995, Ser. No. 589.263

Int. Cl.^{6} A61B *5/103*

U.S. Cl. 128—774 **10 Claims**

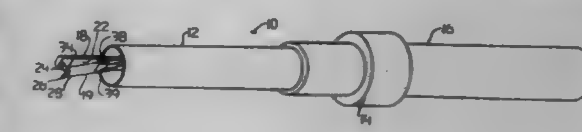

1. A tissue softness probe comprising:

a probe body

a stiff shaft and a flexible shaft extending beside each other away from the probe body;

the stiff shaft terminating in an inclined tissue indentation portion having a tissue indentation tip measuring load in a direction parallel to the tissue indentation portion, the flexible shaft terminating in a tip adjacent the tissue indentation tip of the stiff shaft;

the flexible shaft being oriented to respond to displacement of tissue parallel to the tissue indentation portion; and

electrical means to sense and record strain in each of the stiff shaft and flexible shaft upon displacement of the tissue indentation tip into tissue.

5,701,914

MALE CONTRACEPTIVE

Charles P. Loeffler, 5573 Peacock La., Riverside, Calif. 92505

Filed Oct. 31, 1995, Ser. No. 550,954

Int. Cl.^{6} A61F *6/02*

U.S. Cl. 128—842 **10 Claims**

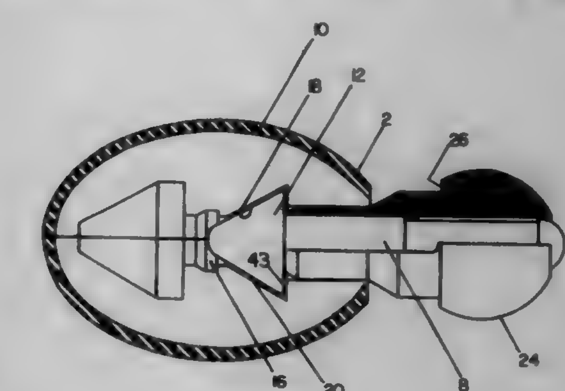

1. A contraceptive device for blocking a male urethra canal having a canal opening and a penis cavity, the device comprising:

(a) an expandable body unit, a forwardly opening cavity extending longitudinally within the body unit and having first, second, and third cavity regions formed therein, the first region being located forwardly of the third region, the second region being spaced between the first and third regions; and

(b) a cam member having an expansion cam and a forwardly extending shaft, the cam member being movable in the cavity with the cam being sequentially locatable in the first, second, and third regions thereof, the cam cooperating with the cavity

for expanding the body unit from a contracted configuration for permitting insertion of the body unit into the penis cavity to an expanded configuration for blocking the urethra when the cam is moved from the first region to the second region, the body contracting to the contracted configuration for permitting withdrawal of the body unit when the cam is moved from the second region to the third region, the cam member being blocked from moving from the second position to the first position and from the third position to the second position for preventing successive uses of the device.

5,701,915
PROPHYLACTIC DEVICE AND PRODUCTION OF SAME
Thomas W. Wilson, III, Chapel Hill, N.C., assignor to Family Health International, Durham, N.C.
Division of Ser. No. 487,712, Jun. 7, 1995, Pat. No. 5,605,164. This application Oct. 30, 1996, Ser. No. 741,859
Int. Cl.⁶ A61F *6/02*
U.S. Cl. 128—842 **1 Claim**

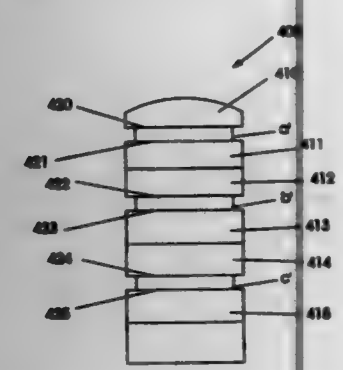

1. An apparatus for producing a prophylactic device of the type having an open proximal end and a closed distal end, said apparatus comprising:
(i) means for cutting apertures in multiple film sections, each aperture defining an aperture edge;
(ii) means for indexing the film sections while maintaining alignment of the apertures therein;
(iii) a mandrel carrying slidable flanges;
(iv) rings for sealing and cutting film;
(v) means for translating said mandrel carrying slidable flanges through the apertures in the film sections while maintaining said mandrel carrying slidable flanges in coaxial alignment with said rings for sealing and cutting film;
(vi) means on said slidable flanges for sealing the aperture edges to each other in an alternating paired manner;
(vii) means on said rings for sealing and cutting the film sections to each other in an alternating paired manner; and
(viii) means for removing said prophylactic device from said mandrel.

5,701,916
INTRAURETHRAL BLADDER CONTROL DEVICE WITH RETAINER APPARATUS
Andre A. Kulisz, and Valery Migachyov, both of San Antonio, Tex., assignors to HK Medical Technologies Incorporated, San Antonio, Tex.
Filed Aug. 16, 1995, Ser. No. 515,920
Int. Cl.⁶ A61F *5/48*
U.S. Cl. 128—885 **5 Claims**

1. Bladder control apparatus for placement in the urethra of a patient comprising:
a. a retainer housing including a first lumen, and said retainer housing including distal and proximal ends;

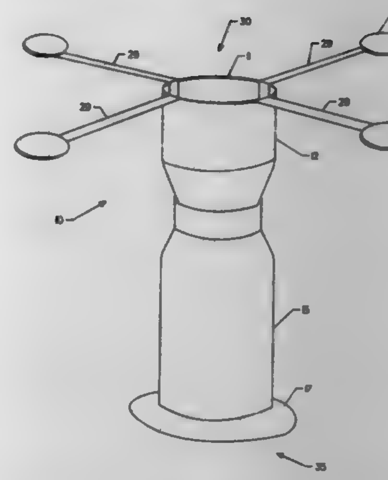

b. a first retainer connected adjacent said distal end of said retainer housing, the first retainer including a leaf spring mounted in said first lumen and including a plurality of leaf springs extending out of said distal end of said retainer housing;
c. a flow control housing including a second lumen, and said control housing including distal and proximal ends;
d. a flow control valve mounted in said second lumen;
e. a second retainer connected adjacent said proximal end of said control housing; and
f. said distal end of said control housing connected to said proximal end of said retainer housing for aligning said first and second lumens for providing a continuous fluid flow path.

5,701,917
METHOD AND APPARATUS FOR PROMOTING SOFT TISSUE ENLARGEMENT AND WOUND HEALING
Roger K. Khouri, St. Louis, Mo., assignor to Khouri Biomedical Research, Inc., St. Louis, Mo.
Continuation-in-part of Ser. No. 220,186, Mar. 30, 1994, Pat. No. 5,536,233. This application Mar. 22, 1995, Ser. No. 408,423
Int. Cl.⁶ A61B *19/00*
U.S. Cl. 128—897 **17 Claims**

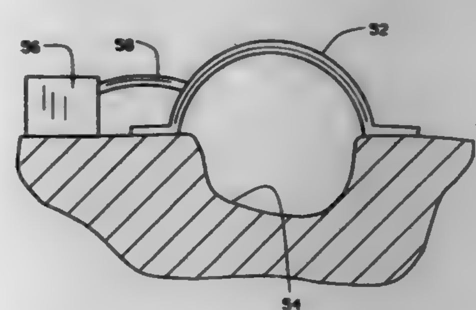

1. A method for accelerating the closing of an open wound through the enlargement of a patient's soft tissue surrounding the open wound, said method comprising the steps of:
subjecting said open wound and at least a portion of the soft tissue surrounding said open wound to a vacuum with a dome, and

supporting said dome from said patient at a contact pressure less than a pressure which will cause damage to any tissue which is pressured by said dome.

5,701,918
MEDICAL GLOVE FOR FACILTIATING ENDOTRACHEAL INTUBATION AND METHOD OF USING SAME
Kalil M. Jiraki, 6751 Grandmont, Detroit, Mich. 48228
Filed Jun. 23, 1996, Ser. No. 673,353
Int. Cl.⁶ A61B *17/00*
U.S. Cl. 128—897 **20 Claims**

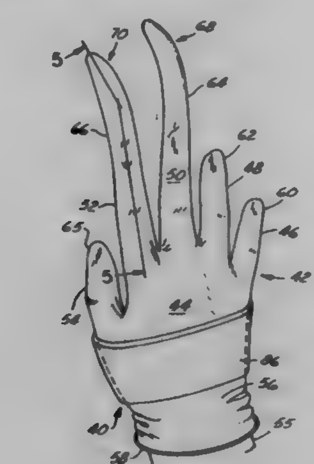

1. A medical glove for manipulating tissues in medical procedures, comprising:
a glove body for covering a hand of a user, said glove body comprising a center section for surrounding and enclosing a central portion of the hand, said center section having a base end with an opening formed there for receiving the hand, said glove body further comprising:
a thumb cover attached to said center section for receiving therein a thumb of the hand, said thumb cover having a thumbtip portion;
an index finger cover attached to said center section for receiving therein an index finger of the hand, said index finger cover having a first fingertip portion;
a center finger cover attached to said center section for receiving therein a center finger of the hand, said center finger cover having a second fingertip portion;
a ring finger cover attached to said center section for receiving therein a ring finger of the hand, said ring finger cover having a third fingertip portion; and
a little finger cover attached to said center section for receiving there a little finger of the hand, said little finger cover having a fourth fingertip portion; and
at least one finger extension member connected with at least one of said thumbtip portion, said first fingertip portion, said second fingertip portion, said third fingertip portion, said fourth fingertip portion and extending axially therefrom, said at least one finger extension member comprising a substantially tubular projection for being manipulated by the hand, wherein said at least one finger extension member forms an extension of the respective thumb cover, little finger cover, ring finger cover, center finger cover, and index finger cover to which said at least one finger extension member is attached;
wherein said at least one finger extension member is solid.

5,701,919
STEP-DOWN SKELETAL MUSCLE ENERGY CONVERSION SYSTEM
Keith Evan Buck, Alamo; David John Farrar, Richmond; Robert Joseph Harvey, Stanford; Philip Litwak, Novato, and John Robert Rueff, Concord, all of Calif., assignors to Thoratec Laboratories Corporation, Berkeley, Calif.
Division of Ser. No. 297,151, Aug. 29, 1994, which is a division of Ser. No. 767,789, Sep. 30, 1991, Pat. No. 5,344,385. This application Jun. 7, 1995, Ser. No. 474,018
Int. Cl.⁶ A61F *1/00*
U.S. Cl. 128—898 **4 Claims**

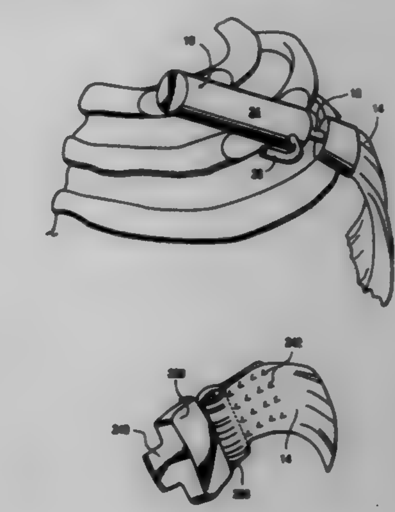

4. A method for surgically attaching a skeletal muscle to conversion means for converting linear contraction of a skeletal muscle into transmutable energy, said method comprising the steps of:
disconnecting only one end of the skeletal muscle from a skeletal structure of a patient;
forming connecting means on said skeletal muscle for connecting said skeletal muscle to said conversion means; and
connecting said connecting means to said conversion means.

5,701,920
DEBRAIDING TOOL
Joseph Taylor, 700 W. Laurel, Apt. A213, Compton, Calif. 90220, and Brenda M. Taylor, 21 Albani Pl., Long Beach, Calif. 90802
Filed Nov. 22, 1995, Ser. No. 561,805
Int. Cl.⁶ A45D *7/02*
U.S. Cl. 132—212 **6 Claims**

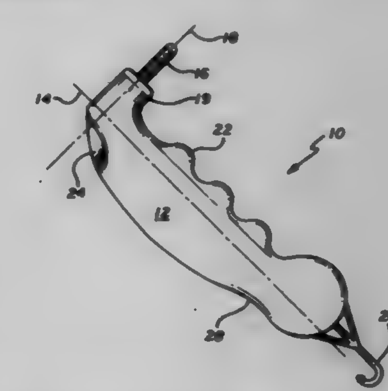

1. A braid removing tool comprising:
an elongate body portion having a longitudinal axis, a first end and a second end and being adapted for retention by a human hand and

a single elongate tooth having a cross-sectional area adapted to engage an opening between strands in a braid, said tooth being mounted at the first end of the body portion along an axis which is aparallel with respect to the longitudinal axis.

5,701,921

KIT WITH TOOTHBRUSH AND TOOTHPASTE COORDINATED THAT END OF WORKING LIVES OCCUR CONCURRENTLY

Richard M. Father, Lynnwood, and Bruce Douglas Ross, Seattle, both of Wash., assignors to NACRE, Bloomingdale, Ill.

Filed Mar. 24, 1995, Ser. No. 409,977

Int. Cl.^{6} A45D *44/18*

U.S. Cl. 132—309 **8 Claims**

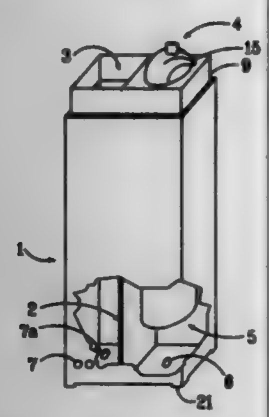

1. A kit comprising, in combination:
a dispenser having a dispensing nozzle and a supply of toothpaste disposed therein; and
at least one toothbrush having a defined useful working life;
said toothpaste and said at least one toothbrush being associated as a set wherein the quantity of the supply of toothpaste is determined to be the minimum amount required to perform approximately the number of brushings determined to be said defined working life of the at least one toothbrush.

5,701,922

WATER-BASED FLUSHING FOR PAINTS AND OTHER COATINGS

Richard E. Knipe, Jr., Montebello, N.Y.; Savarimuthu M. Jacob, Edison, and Thomas Mancini, Lincoln Park, both of N.J., assignors to Dalco Industries, Ltd., Spring Valley, N.Y.

Division of Ser. No. 581,157, Dec. 29, 1995, Pat. No. 5,632,822. This application Jan. 16, 1997, Ser. No. 784,315

Int. Cl.^{6} B08B *3/04;9/00*

U.S. Cl. 134—100.1 **16 Claims**

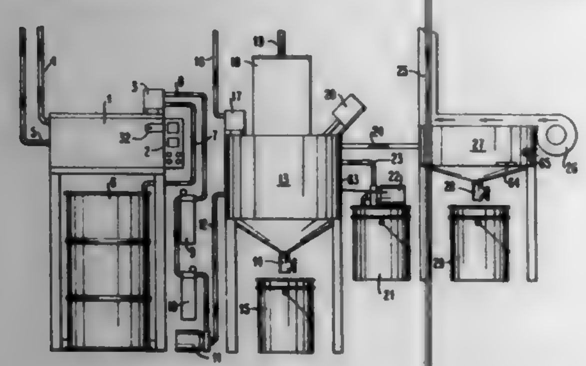

1. An apparatus for purging coating equipment, comprising:
purge concentrate supply means for supplying an aqueous purge concentrate;
dilution water supply means for supplying dilution water;
a purge solution tank connected to the purge concentrate and dilution water supply means, for containing a purge solution;
solution proportioning means connected to the purge solution tank for forming the purge solution contained in the purge solution tank, the purge solution being a solution of purge concentrate and dilution water at a selected concentration range;
heating means for maintain the purge solution in the purge solution tank, within a selected temperature range;
purge solution supply mean for supplying the purge solution at the selected concentration range and within the selected temperature range, to the coating equipment for purging the coating equipment and to form spent solution containing purged coating; and
conditioning means connected to the dilution water supply means and connected for receiving the spent solution from the coating equipment, the conditioning means conditioning the spent solution by removing purged coating from the spent solution to form the dilution water for the dilution water supply means.

5,701,923

COLLAPSIBLE SHELTER

Raymond Losi, Jr., 4307 Oak Place Dr., Westlake Village, Calif. 91362, and Ming-Liang Tsai, Rm. 3, 4th Floor, No. 8, Fu Ching Street, Taipei, Taiwan

Continuation-in-part of Ser. No. 611,511, Mar. 7, 1996, Pat. No. 5,638,853. This application Dec. 23, 1996, Ser. No. 773,265

Int. Cl.^{6} E04H *15/50*

U.S. Cl. 135—131 **31 Claims**

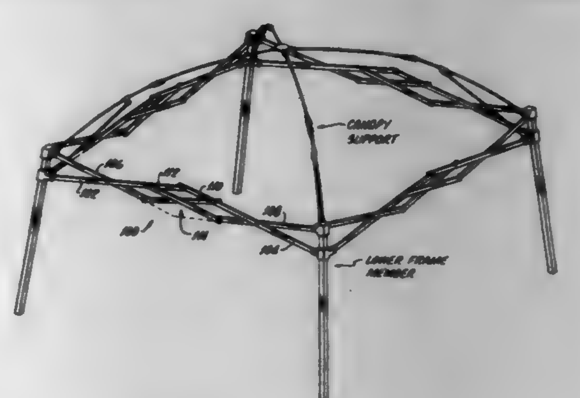

1. A shelter frame, comprising:
at least first and second upwardly extending poles; and
a linkage assembly linking the first and second poles, the linkage assembly including
first and second scissors-type linkages each having respective first structural members pivotally coupled to respective second structural members, the first structural member in the first scissors-type linkage being pivotally coupled to the first structural member in the second scissors-type linkage, and
a linking device pivotally secure a predetermined portion of the second structural member in the first scissors-type linkage to the second scissors-type linkage at a point on the second scissors-type linkage vertically spaced from the predetermined portion of the second structural member in the first scissors-type linkage and to pivotally secure a predetermined portion of the second structural member in the second scissors-type linkage to the first scissors-type linkage at a point on the first scissors-type linkage vertically spaced from the predetermined portion of the second structural member in the second scissors-type linkage.

5,701,924

APPARATUS AND METHOD FOR DETECTING AND HANDLING LIQUID SEPARATION IN LIQUID EMULSIONS

Gerald N. Coleman, Peoria, Ill., assignor to Caterpillar Inc., Peoria, Ill.

Filed Oct. 30, 1996, Ser. No. 739,846

Int. Cl.^{6} F17D *1/00*

U.S. Cl. 137—3 **6 Claims**

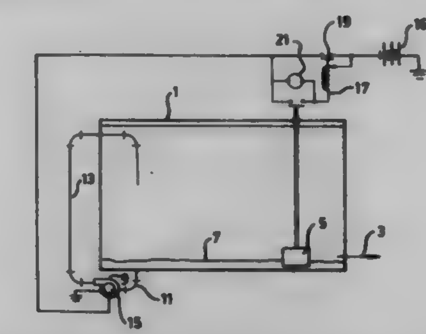

1. A method of preventing separated higher density liquid from an emulsion of different density liquids stored in a tank 1 from being withdrawn from a withdrawal conduit 3 disposed adjacent the lower portion of the tank 1 for drawing off the emulsified liquid from the tank characterized by the steps of disposing within the tank 1, a float 5 which floats on the higher density liquid and sinks in the emulsion, disposing a pump 9 so that its suction is in fluid communication with the lowest portion of the tank 1 and it discharges into the central portion of the tank 1, and providing a drive 15 cooperatively associated with the pump 9 and the float 5 so that when the float 5 is lifted by an accumulation of higher density liquid in the lower portion of the tank 1, the drive 15 operates the pump 9, whereby the high density liquid is removed from the bottom of the tank 1 and introduced into the central portion of the tank 1 where the high density fluid is reemulsified and prevented from entering the withdrawal conduit 3.

5,701,925

SANITARY YARD HYDRANT

Shaun T. Mulligan, Lakewood; Robert J. Vandepas, Colorado Springs; James F. Shuler, Colorado Springs, and Lawrence Almasy, Colorado Springs, all of Colo., assignors to WCM Industries, Inc., Colorado Springs, Colo.

Filed Sep. 18, 1995, Ser. No. 529,591

Int. Cl.^{6} F16K *11/20*

U.S. Cl. 137—119.05 **13 Claims**

1. A sanitary yard hydrant, comprising, an elongated vertical hollow tube having upper and lower ends and an internal fluid reservoir,
a vertically disposed first pipe extending from within said reservoir upward through the upper end of said tube, and having upper and lower ends,
a fluid control valve mounted at the lower end of said pipe and movable between open and closed positions,
a vertically disposed second pipe extending downwardly from said valve and adapted to be connected to a source of fluid under pressure,
an operating rod extending upwardly from said control valve through said first pipe,
a fluid discharge means on the upper end of said first pipe and in communication with the interior of said first pipe,
a hydrant handle connected to the upper end of said first pipe and to said operating rod and being movable between opposite positions to cause said control valve to be moved between open and closed positions to control the flow of fluid from said second pipe into said first pipe,
said control valve having a drain opening to permit flow of fluid from said first pipe into said reservoir when said control valve is closed,

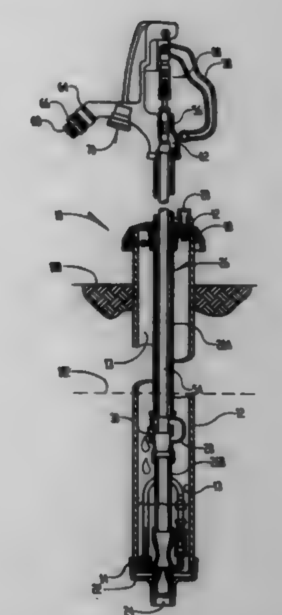

a venturi valve connected to said second pipe and in communication with said reservoir to permit fluid in said reservoir to flow therethrough into said second pipe when fluid under pressure is flowing upwardly through said second pipe, said control valve, and said first pipe, and to close to prevent the flow of fluid therethrough from said second pipe into said reservoir when said control valve is closed,
said fluid discharge means including a fluid conduit having a discharge end, and a fluid backflow preventer on said discharge end, and
a normally open fluid diverter discharge element in said fluid conduit upstream from said discharge end and said backflow preventer to permit fluid flowing through said fluid conduit to exit said fluid conduit through said fluid diverter discharge element and not through backflow preventer and being in communication with said first pipe to vent said first pipe so that any fluid in said first pipe can drain into said reservoir when said control valve is closed.

5,701,926

BACKFLOW PREVENTION DEVICE AND VACUUM BREAKER FOR KITCHEN PLUMBING

Domenic Luisi, Schomberg, Canada, assignor to The Rubinet Faucet Company, Woodbridge, Canada

Filed Jun. 7, 1995, Ser. No. 478,795

Int. Cl.^{6} E03C *1/10*

U.S. Cl. 137—218 **9 Claims**

1. A backflow prevention and vacuum breaker device for connection between a potable water supply and a faucet to prevent backflow and back siphoning of contaminated water into a potable water supply, comprising:
a mixing cartridge and a vacuum breaker cartridge, said vacuum breaker cartridge connected to said mixing cartridge and being disposed below said mixing cartridge,
said vacuum breaker cartridge having a body having fluid entry means for receiving potable water from said mixing cartridge, fluid exit means for directing potable water towards said faucet, and backflow prevention means located between said fluid entry means and said fluid exit means,
said backflow prevention means having a chamber having an entry port contiguous with said fluid entry means, an exit port contiguous with said fluid exit means and a back flow prevention port which is open to atmospheric pressure; and a gravity biased valve disposed in said chamber and movable between a first seated position sealing said entry port and a second raised position sealing said backflow prevention port;

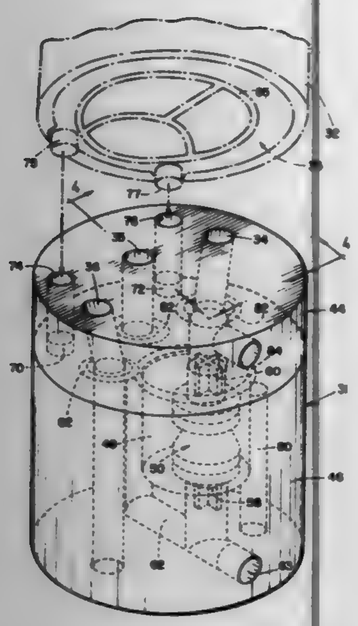

whereby potable water flowing downwardly into said chamber from said mixing cartridge from said fluid entry means is directed upwardly towards said entry port, moving said valve from said first seated position to said second raised position to prevent water leakage through said backflow prevention port thereby permitting potable water to flow through said chamber, out said exit port and along said fluid exit means, and said gravity biased valve returning to said first seated position in the absence of water flow, thereby opening said backflow prevention port, returning said chamber to atmospheric pressure and preventing backflow of contaminated fluid into the potable water supply.

5,701,927
INTERCHANGEABLE AUTOMATIC CONTROL VALVE

Louis J. Hansen, Jr., El Macero; Luciano J. Maligad, Jr., Elk Grove, and Douglas H. Powell, El Macero, all of Calif., assignors to Hunter Innovations, Sacramento, Calif.

Filed Nov. 20, 1995, Ser. No. 557,495
Int. Cl.^{6} F16K *31/12*
U.S. Cl. 137—271 **16 Claims**

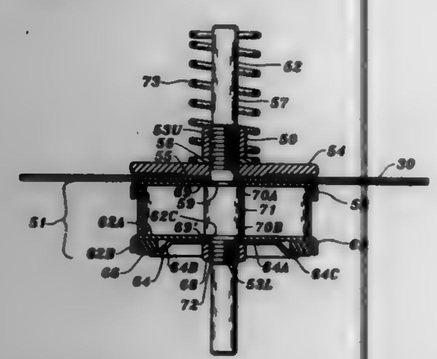

12. An interchangeable automatic fluid control valve, valve actuator adapted to operate in the same diameter valve's housing as made by two different manufacturers, which actuator comprises:

a. a shaft having two sets of spaced apart threads thereon, the first of said sets is spaced down from the top of said shaft, and the second of which sets is spaced up from the bottom of said shaft,

b. a diaphragm disk plate having a center opening is disposed on said shaft immediately below the first set of threads,

c. a diaphragm having a central opening therein is disposed on said shaft beneath said diaphragm disk plate,

d. a main body of an associated vertically disposed series of components, which are abutted one against another, said main body comprises first and second spaced flange plates each of which has a central bore and each of which is of the same diameter, and each of which has a turned down lip, with an annular member disposed therebetween and within the turned down lip of the first of said flange plates, said main body being disposed beneath said diaphragm on said shaft,

e. a seat ring disposed between the turned-down lip of said second flange plate and a retention means for said seat ring, and

f. a pair of nuts threadedly engaged, one with the first and one with the second set of threads on said shaft to retain all of the aforesaid elements on said shaft.

5,701,928
LEAK COMPRESSED FUEL GAS DISCHARGING DEVICE

Takeshi Aoki, Wako, Japan, assignor to Honda Giken Kogyo Kabushiki Kaisha, Tokyo, Japan

Filed Sep. 22, 1995, Ser. No. 531,590
Claims priority, application Japan, Sep. 30, 1994, 6-259579
Int. Cl.^{6} B65D *25/00;* **F16K** *24/00*
U.S. Cl. 137—312 **4 Claims**

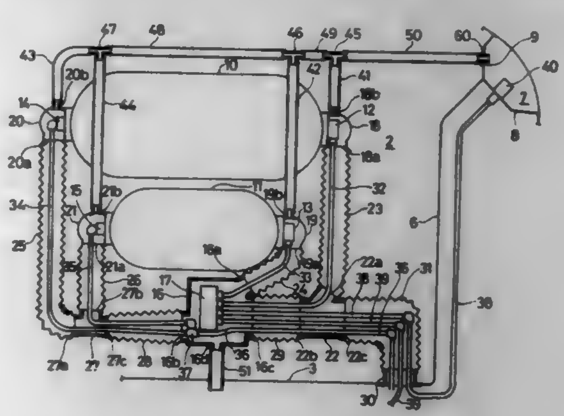

1. A leak compressed fuel gas discharging device in an automobile having a compressed fuel gas tank arranged within a shut-up compartment, comprising:

a valve provided on an inlet and outlet of said compressed gas tank at each end thereof;

a valve covering for hermetically covering said valve so as to seal said inlet and outlet of said compressed gas tank;

a leak compressed fuel gas discharging tube having base end and distal end, said base end connected to said valve covering such that said gas discharging tube extends from said sealed inlet and outlet to an opening of a car body wall;

a tube connecting portion for hermetically interconnecting said valve covering and said base end of said leak compressed fuel gas discharging tube;

a pipe joint integrally fitted with said distal end of said leak compressed fuel gas discharging tube and detachably inserted into an opening on a car-body wall from inside toward outside of said compartment, said pipe joint having a swelled portion formed on a outer peripheral surface at inside of said compartment and an engaging groove formed in a peripheral direction on a outer peripheral surface at outside of said compartment; and

a generally semi-cylindrical shaped cover member for covering said pipe joint outside of said compartment, said cover member having an opening for accommodating a distal end of said pipe joint and an engaging portion provided on an inner surface adjacent to said opening, said engaging portion detachably engageable with said engaging groove of said pipe

joint, whereby gas leakage from said compressed fuel gas tank is vented into said leak compressed fuel gas discharging tube and smoothly into the atmosphere through said pipe joint and said opening of said cover member.

5,701,929
COVER ASSEMBLY HAVING RAPID INSTALLATION FEATURES FOR COVERING UNDERSINK PIPING

John A. Helmsderfer, 2151 Luray Ave., Cincinnati, Ohio 45206

Continuation-in-part of Ser. No. 735,132, Oct. 22, 1996, which is a continuation-in-part of Ser. No. 490,599, Jun. 6, 1995, which is a continuation-in-part of Ser. No. 337,971, Nov. 14, 1994, Pat. No. 5,564,463, which is a continuation-in-part of Ser. No. 271,439, Jul. 7, 1994, Pat. No. 5,586,568, which is a continuation-in-part of Ser. No. 146,999, Oct. 29, 1993, Pat. No. 5,341,830, and a continuation-in-part of Ser. No. 675,779, Jul. 15, 1996, Pat. No. 5,649,566, which is a division of Ser. No. 271,439, Jul. 7, 1994, Pat. No. 5,586,568. This application Nov. 1, 1996, Ser. No. 742,507
Int. Cl.^{6} F16L *59/18*
U.S. Cl. 137—375 **17 Claims**

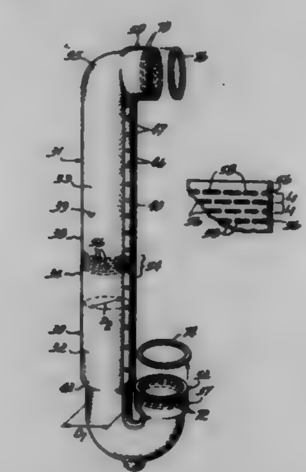

1. An insulative cover assembly for insulating a P-trap drain piping assembly located under a sink including a straight pipe, a J-shaped pipe, and an L-shaped pipe joined together at junctures by pipe nuts, the cover assembly comprising:

a unitary body including a first section and a second section joined together at a third section, the first section having body configured to cover a pipe and having a first end, end the second section having a body configured to cover a pipe and having a first end;

the third section coupling second ends of each of the first and second sections together to form said unitary body, the third section comprising a structurally weakened area therein which is manually separateable for thereby separating the second ends and forming first and second cover pieces from said unitary body, said structurally weakened area comprising a plurality of perforations extending in a generally circumferential line around the unitary body between the first and second sections;

the first and second sections each including a longitudinal slit thereon for being spread apart and positioned over the pipes when separated into first and second cover pieces;

whereby the piping assembly is quickly and efficiently covered and insulated generally without the need for special installation tools.

5,701,930
MODULAR VALVE ASSEMBLY

Robert L. Russell, 979 Walnut Ridge Ct., Frankfort, Ill. 60423

Filed May 1, 1995, Ser. No. 431,893
Int. Cl.^{6} F16K *43/00;1/00;* **F01L** *3/00*
U.S. Cl. 137—454.5 **8 Claims**

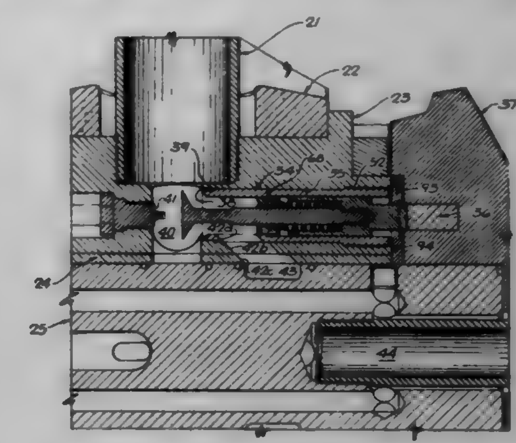

1. A modular, pre-assembled valve assembly designed to be installed and removed as a unit comprising:

a generally cylindrical housing having a lateral gas port and an adjacent valve seat constructed to be removably and insertably secured completely within a mating socket formed in an external support, of an engine block;

a valve having an elongated stem and a valve head cooperable with said valve seat;

a stationary valve guide insertible into and supported on an interior wall portion within said housing to support said stem for coaxial movements therewithin;

an axially moveable cam follower slidably disposed within said housing and engageable with a valve actuating cam located externally of said housing, and

a spring extending between an interior cylindrical blind socket within said cam follower for slidably receiving a major portion of said spring therein and one end of said guide for biasing said valve head against said seat whereby, said cylindrical housing is easily inserted into and removed from said engine block mating socket along with said valve guide, said spring, said cam follower, said valve head, said valve seat and said valve stem as a single unit simultaneously.

5,701,931
WATER RELIEF VALVE FOR A DRAINAGE SYSTEM

Trevor J. Phillips, and James E. Petrie, both of 851 N. Harvard, Lindsay, Calif. 93247

Continuation-in-part of Ser. No. 16,534, Dec. 17, 1993, Pat. No. Des. 363,769. This application Oct. 30, 1995, Ser. No. 550,345
Int. Cl.^{6} F16K *15/02*
U.S. Cl. 137—533.29 **7 Claims**

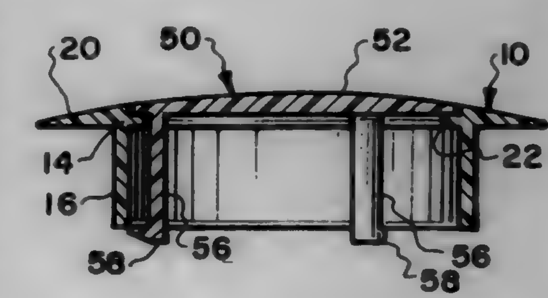

7. A water relief valve for a drainage system, which comprises: a valve movably positioned in a separate cylinder body;

said valve comprising:
a disc having a concentric dome-shaped top surface;
sliding means having one end secured to said valve and an opposite free end extending downwardly from said disc;
said sliding means having a stop means for preventing said valve from disengaging with said cylinder body whenever water is flowing through said cylinder portion and said valve;
said separate cylinder body comprising:
a cylinder portion having a side wall and an open bottom;
said top of said cylinder body having a concentric exterior flange;
said concentric exterior flange of said cylinder body having an outwardly and downwardly sloping top surface;
said cylinder body having a concentric interior lip recessed below said top of said cylinder body for receiving said valve and;
said concentric dome-shaped top surface of said valve and said concentric exterior flange of said cylinder body forming a concentric dome-shaped flush surface when in the closed position.

5,701,932
VALVE WITH BUILT-IN LEVEL GAUGE
Georges Bourscheid, Steinsel, and Jim Muttesch, Walferdange, both of Luxembourg, assignors to Luxembourg Patent Company, S.A., Luxembourg, Luxembourg
Filed Oct. 30, 1995, Ser. No. 550,410
Claims priority, application Luxembourg, Oct. 31, 1994, 88 552
Int. Cl.[6] F16R *37/00*
U.S. Cl. 137—558 **6 Claims**

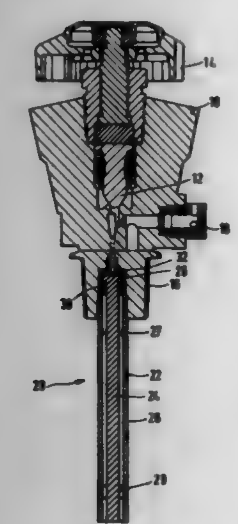

1. A valve with built-in level gauge for use with a bottle containing gas of a high degree of purity, the valve comprising:
a valve body with a closure member and a fitting region enabling the valve to be fixed, in a removable manner, to the neck of the gas container,
a cylindrical tube coaxially surrounding an elongate rod, the tube and the rod depending from and supported by the valve and extending over the entire height of the container, an upper end of the rod having an annular shoulder comprising upper and lower faces,
a plurality of spacers located along the gauge extending between the tube and the rod,
means for measuring capacitance between the rod and tube, and
a device for displaying the level of gas in the container attached directly to the valve body,
wherein the rod is electrically isolated from the tube and valve body by first and second washers, the first washer located adjacent the lower face of the shoulder and extending between the rod and the tube, the second washer located adjacent the upper face of the shoulder and extending between the rod and the valve body.

5,701,933
HYDRAULIC CONTROL SYSTEM HAVING A BYPASS VALVE
Stephen V. Lunzman, Chillicothe, Ill., assignor to Caterpillar Inc., Peoria, Ill.
Filed Jun. 27, 1996, Ser. No. 672,181
Int. Cl.[6] F15B *13/08*
U.S. Cl. 137—596.12 **8 Claims**

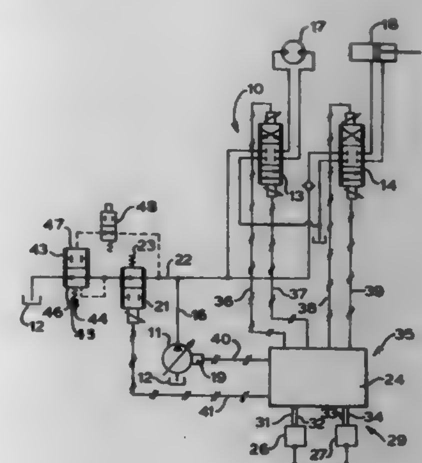

1. A hydraulic control system having a pump for delivering pressurized hydraulic fluid from a reservoir, a closed center control valve disposed between the pump and an actuator to control flow of pressurized fluid fed to the actuator, a bypass line connecting the pump to the reservoir, a bypass valve disposed in the bypass line to control fluid flow therethrough and biased to an open flow communicating position, and a controller connected to the control valve and the bypass valve and being operative to controllably move the control valve toward an open, flow communicating position and the bypass valve toward a closed flow blocking position, comprising:
a pressure compensating valve disposed in the bypass line to maintain a predetermined pressure differential across the bypass valve when the pressure upstream of the bypass valve exceeds a predetermined level.

5,701,934
ROTARY DIVERTER VALVE
Christopher G. Kuran, Glendale; Harold John Valley, Fountain Valley, and Raymond Eugene Hayes, Camarillo, all of Calif., assignors to V. A. Butler, Inc., Chatsworth, Calif.
Filed Feb. 2, 1996, Ser. No. 594,683
Int. Cl.[6] F16K *11/06*
U.S. Cl. 137—625.46 **13 Claims**

1. A diverter valve comprising:
an upper housing section defining a fluid inlet and a first fluid outlet;
a lower housing section rotatably connected to said upper housing section and defining a second fluid outlet, said lower housing section being selectively rotatable between first and second positions;
an upper diverter member disposed within said upper housing section and defining a first flow passage in fluid communication with said fluid inlet; and
a lower diverter member disposed within said upper housing section and defining a second flow passage in fluid communication with said second fluid outlet and a third flow passage

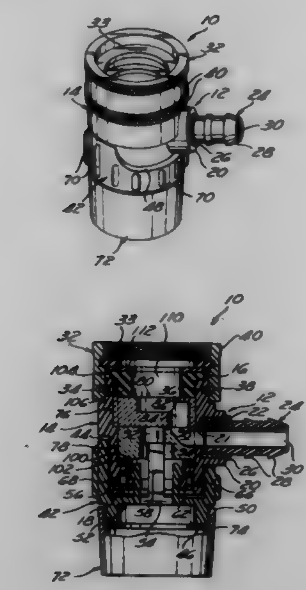

selectively placeable into fluid communication with said first fluid outlet, said lower diverter member being attached to said lower housing section and rotatable concurrently therewith;
said second flow passage fluidly communicating with the first flow passage when the lower housing section is in the first position, and said third flow passage fluidly communicating with the first flow passage and the first fluid outlet when the lower housing section is in the second position.

5,701,935
PROTECTIVE PLUG FOR USE IN WELDING OF THREADED BOSSES
Kailash C. Vasudeva, Waterloo, Canada, assignor to Maxtech Manufacturing Inc., Waterloo, Canada
Filed Dec. 26, 1995, Ser. No. 578,482
Int. Cl.[6] F16L *55/105*
U.S. Cl. 138—89 **6 Claims**

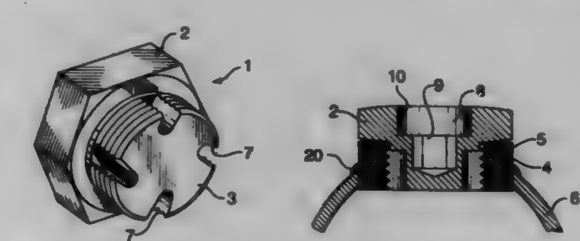

1. A plug and boss combination for use in welding said boss into a hole through a part, said boss having an upper surface and a female-threaded cylindrical bole extending through said boss from said upper surface, said plug comprising a head and a cylindrical portion extending below the head, the cylindrical portion having male threads adapted to be received by the female threads of the boss, the head having a minimum transverse dimension of at least the maximum transverse dimension of an upper surface of the boss so as to completely cover said upper surface, the cylindrical threaded portion of the plug having at least one thread-cutting edge defined therein, configured to re-tap the threads of the boss when an installed plug is rotated in the direction necessary to remove the plug from the boss.

5,701,936
TUCKING DEVICE FOR WIRE WEAVING MACHINES AND METHOD
James R. Miller, Greenville, S.C., assignor to Precision Research & Development, Greenville, S.C.
Filed Mar. 7, 1996, Ser. No. 612,427
Int. Cl.[6] B21F *27/14*
U.S. Cl. 140—24 **7 Claims**

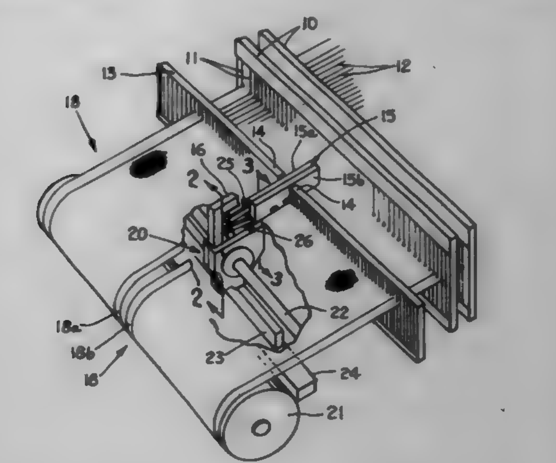

1. Apparatus for tucking wire on opposed selvages on a wire weaving machine having a synchronizing shaft operated on one end by picking mechanism and extending transversely to receiving mechanism on the other end comprising:
a cutter cam mounted for movement responsive to rotation of said synchronizing shaft;
a cutter member pivotally mounted for movement responsive to movement of said cutter cam;
a forming finger cam mounted for movement responsive to rotation of said synchronizing shaft; and
a pair of opposed horizontal forming fingers mounted on opposed vertical shafts for movement responsive to movement of said forming finger cam;
whereby a filling wire is cut and tucked in opposed selvages of adjacent wire panels in timed positively controlled sequences responsive to movements of said cutter cam and said forming finger cam respectively.

5,701,937
FLUID DISTRIBUTION SYSTEM
Yves Bourboulou, Rilhac-Rancon; Micheline Bouchetell, Saint-Yrieix-sous-Aixe; Céline Philippou, Limoges, and Jean Tronchet, Couzeix, all of France, assignors to Pharmacia & Upjohn Aktiebolag, Stockholm, Sweden
PCT No. PCT/SE93/00934, § 371 Date Sep. 19, 1995, § 102(e) Date Sep. 19, 1995, PCT Pub. No. WO94/10965, PCT Pub. Date May 26, 1994
PCT Filed Nov. 8, 1993, Ser. No. 432,127
Claims priority, application Sweden, Nov. 9, 1992, 9203330-7
Int. Cl.[6] A61J *1/05*
U.S. Cl. 141—244 **9 Claims**

1. A closed aseptic system for aseptically distributing a plurality of fluids from conduits leading from a controlled atmosphere zone for production of the fluids to containers having several compartments by several manifold devices located outside the said zone characterized in that each manifold device (3, 3') has a singular fluid inlet (4, 4') sealingly connected with a determined conduit (1) for the distribution of one determined fluid, wherein each manifold device is provided with a plurality of fluid outlet orifices (5, 5') sealingly connected to the containers (8) by tubings (6) and wherein,
a) the cross-sectional area of said manifold device inlet is selected from the group consisting of being larger than the sum of the cross-sectional areas of said outlet orifices, and

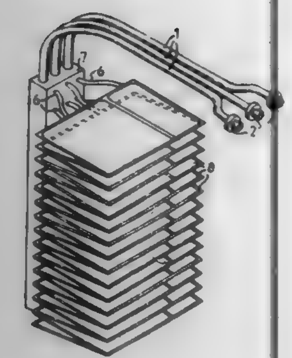

b) the relationship of the diameter of the manifold device inlet and a manifold outlet orifices is about 3:2, in order to obtain that

(i) the fluid flow is substantially the same in each tubing (6) that connects the outlet orifices of the manifolding device to the containers; and that

(ii) the pressure drop is substantially the same in all outlet orifices of the manifold device; and

wherein said system is adapted for filling several compartments of the containers simultaneously with different fluids wherein each manifold device is selected from the group consisting of being assembled by attachment means and pre-manufactured in an assembly, so that each fluid will be distributed in its predetermined manifold device to its designated compartment of multi-compartment containers and wherein said multi-compartment containers are collapsible.

5,701,938

METHOD AND APPARATUS FOR RETAINING A FLITCH FOR CUTTING

Robert D. Brand, Lawrence, Ind., assignor to Capital Machine Company, Inc., Indianapolis, Ind.

Continuation of Ser. No. 455,479, May 31, 1995, Pat. No. 5,562,137. This application Jul. 23, 1996, Ser. No. 685,207

Int. Cl.^{6} B27C *1/00;* **B27M** *1/02*

U.S. Cl. 144—363 **42 Claims**

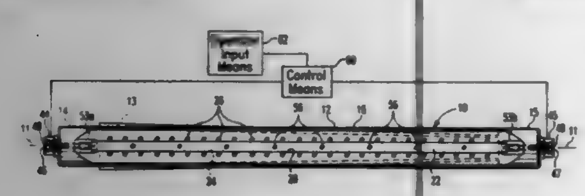

5. A method of retaining a flitch on a staylog for slicing veneer from a tapered veneer-producing zone, the staylog having a plurality of dogs, the method comprising the steps of:

providing a flitch having a plurality of holes for receiving the plurality of dogs, the holes having a depth profile and the dogs having a flitch engaging portion configured to generally conform to the depth profile, the flitch-engaging portion including a plurality of flitch-engaging surfaces,

positioning the plurality of dogs in the plurality of holes, and

engaging the flitch with at least one of the plurality of flitch-engaging surfaces on each of the plurality of dogs to retain the flitch on the staylog with the tapered veneer-producing zone maintained in parallel relation to a veneer-slicing knife.

5,701,939

SUN BLOCKING SHADE DEVICE

Michal Pinto, and Akiva Pinto, both of 516 Eastwood Dr., Gastonia, N.C. 28054-4911

Filed Dec. 21, 1995, Ser. No. 575,959

Int. Cl.^{6} A47H *5/00*

U.S. Cl. 160—84.01 **7 Claims**

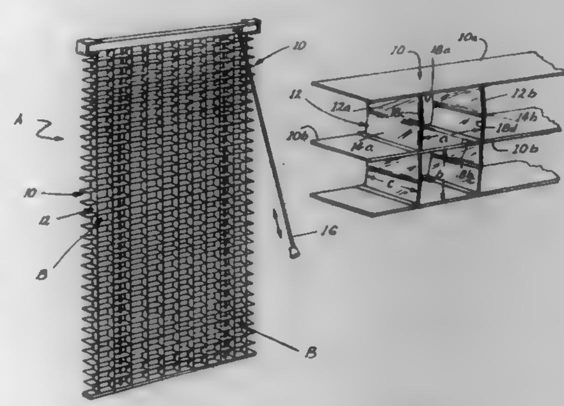

1. A device for covering an architectural opening to substantially block solar rays and heat while allowing substantial visibility outwardly through the opening comprising:

a covering substantially defining a plane, said covering having dimensions generally approximate that of said architectural opening;

said covering including a plurality of sun blocking cells arranged in a two-dimensional array having first and second dimensions, in said covering;

said sun blocking cells including an inner perimeter wall having a depth defined between front and rear openings by which said inner perimeter wall of said cells effectively blocks a substantial amount of said sun rays and heat;

said sun blocking cells having an open configuration for sun ray blocking and in which a cell passage is defined transverse to said architectural opening providing see through visibility through said opening, and said sun blocking cells having a closed configuration in which said visibility through said cell passage is reduced

said covering including a plurality of first planar strip elements extending in the second dimension of said array, said first strip elements being spaced along said first dimension of said array, and a plurality of thin second strip elements extending between said first strip elements to define said sun blocking cells;

said first and second strip elements intersecting generally at a right angle to form a plurality of rectangular sun blocking cells extending in said first and second dimensions of said array;

said second strip elements including flexible web elements extending linearly between said first strip elements, and said flexible web elements being collapsible about at least one axis transverse to the plane of the covering so that said sun blocking cells assume said generally closed configuration when said covering is drawn together in a direction corresponding to said first dimension; and

said foldable web elements having a width generally equal to said depth of said cell for effective sun blocking.

5,701,940

CELLULAR SHADE

James Arthur Ford; Don Lee Bertva, both of Sturgis, Mich.; James Murrell Kennedy, Elkhart, Ind., and Ronald Lynn Presdorf, Sturgis, Mich., assignors to Cooper Industries, Inc., Houston, Tex.

Continuation-in-part of Ser. No. 208,981, Mar. 10, 1994, abandoned. This application Aug. 1, 1995, Ser. No. 509,910

Int. Cl.^{6} E06B *3/48*

U.S. Cl. 160—84.05 **34 Claims**

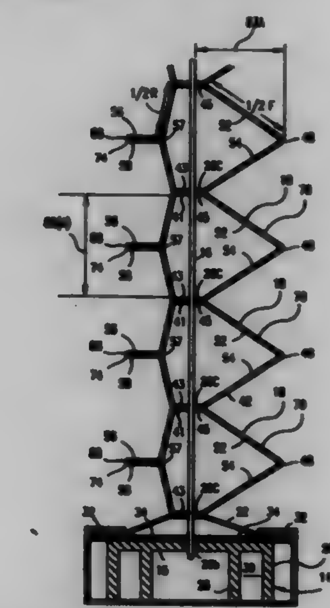

1. A cellular pleated shade member having a plurality of cells, at least one of the cells comprising:

a strip of shade material folded lengthwise to form an upper cell wall and a lower cell wall extending from a fold, each upper and lower cell wall having a free edge and a folded edge merging with the adjacent wall of the strip at said fold;

said upper cell wall and lower cell wall of said strip connected adjacent their respective free edges and forming a fin at said connection;

wherein said upper cell wall is attached to a lower cell wall of a first adjacent cell at an upper interconnection zone, said upper interconnection zone being located on said upper cell wall between said fin and said fold; and

wherein said lower cell wall is attached to an upper cell wall of a second adjacent cell at a lower interconnection zone, said lower interconnection zone being located on said lower cell wall between said fin and said fold.

5,701,941

ADJUSTABLE HANGING SUPPORT MECHANISM FOR FOLDING PANEL ASSEMBLY ENCLOSURE

Gerald S. Pasternak, Naples, Fla., assignor to Dynafair Corporation, Tampa, Fla.

Filed May 30, 1996, Ser. No. 657,663

Int. Cl.^{6} E05D *15/26*

U.S. Cl. 160—199 **15 Claims**

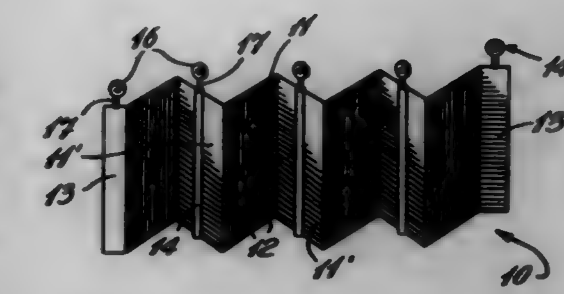

1. In an enclosure comprising a folding panel assembly having a plurality of interconnected folding panels and end posts and a plurality of hanging support mechanisms for slidingly supporting said assembly suspended from a rail at spaced intervals along a top end of said panel assembly and permitting said panels to fold in an accordion fashion, the improvement comprising said hanging support mechanism having a support element connected at a top end to displaceable track engagement means, said support element having a plurality of spaced fastener engaging apertures extending along a connecting section thereof, said apertures being configured to receive a fastener element in engagement therewith, channel means in at least some of said panels to receive at least said connecting section of an associated one of said support element in axial rotation therein, fastener arresting means associated with said channel means of said panels for receiving a fastener means therein to permit interlocking connection with a selected one of said fastener engaging apertures of an associated support element to provide vertical height adjustment of said enclosure.

5,701,942

SEMI-SOLID METAL PROCESSING METHOD AND A PROCESS FOR CASTING ALLOY BILLETS SUITABLE FOR THAT PROCESSING METHOD

Mitsuru Adachi; Hiroto Sasaki, and Satoru Sato, all of Ube, Japan, assignors to Ube Industries, Ltd., Ube, Japan

Continuation of Ser. No. 396,507, Mar. 1, 1995, abandoned. This application Jul. 15, 1996, Ser. No. 683,023

Claims priority, application Japan, Sep. 9, 1994, 6-251140; Sep. 30, 1994, 6-271908

Int. Cl.^{6} C22C *1/00;* **B22D** *23/00;27/08*

U.S. Cl. 164—71.1 **19 Claims**

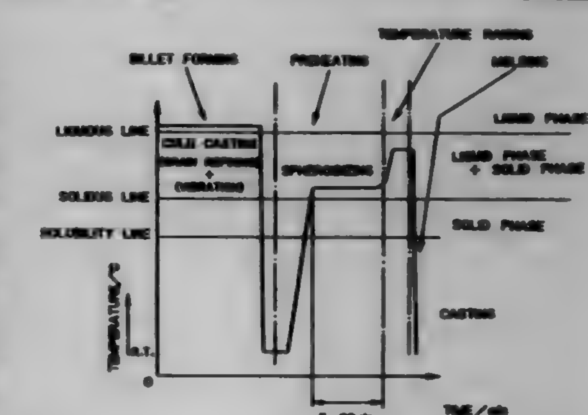

1. A method of processing semi-solid metals comprising the steps of:

(a) casting a melt of a magnesium alloy or an aluminum alloy having a composition within maximum solubility limits into a billet-forming mold, the melt being at a temperature as it is cast into said billet-forming mold which exceeds a liquidus line temperature of the alloy, but is not higher by more than 30° C. of the liquidus line temperature;

(b) cooling said melt to solidify said alloy within said billet-forming mold at a cooling rate of at least 1.0° C./sec in a solidification zone to form a billet;

(c) heating said billet within said billet-forming mold from a solubility line temperature to a solidus line temperature of the alloy at a rate of at least 0.5° C./min;

(d) further heating the billet from step (c) to a temperature exceeding the solidus line temperature of the alloy;

(e) maintaining the billet from step (d) at the temperature in step (d) for 5–60 minutes, thereby spheroidizing primary crystals thereof;

(f) further heating said billet from step (e) to a molding temperature below the liquidus line temperature of the alloy to form a semi-solid billet;

(g) feeding the semi-solid billet into a shaping mold; and
(h) forming the billet into a shape under pressure.

5,701,943
MANUFACTURE OF COMPOSITE MATERIALS
Robin Michael Kurt Young, Wantage, United Kingdom, assignor to AEA Technology PLC, Didcot, United Kingdom
Filed Jan. 19, 1996, Ser. No. 587,706
Claims priority, application United Kingdom, Jan. 27, 1995, 9501645
Int. Cl.⁶ B22D *19/14;18/02*
U.S. Cl. 164—97 **5 Claims**

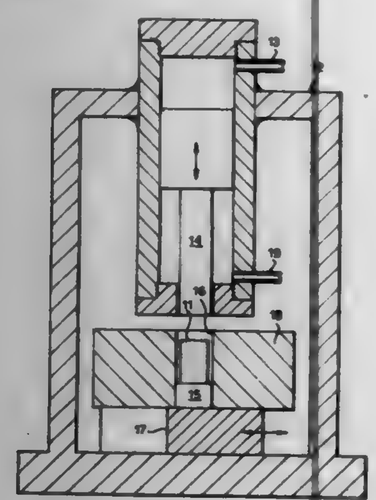

1. A method of manufacturing a composite artefact comprising the steps of:
i) forming a mixture in which particles of metal or metal alloy matrix material are inter-dispersed with particles of ceramic reinforcement material, the relative proportion of matrix and reinforcement corresponding to that desired in the finished composite artefact, and the volume percentage of reinforcement material being greater than 40,
ii) heating the mixture to a temperature high enough to cause melting of the metal matrix material,
iii) applying pressure in excess of 15,000 psi to the heated mixture in a die-press whereby sufficient shear and pressure forces are exerted upon the constituents to cause a substantial proportion of the molten metal particles to coalesce into a continuous matrix in which the particles of reinforcement are embedded, and
iv) after a period of time of not more than several minutes when the matrix material has solidified, removing the solid artefact from the die.

5,701,944
DIE CASTING MACHINE AND METHOD
Robert W. Young, Temperance, Mich., assignor to Doehler-Jarvis Technologies, Inc., Toledo, Ohio
Filed Nov. 17, 1995, Ser. No. 560,340
Int. Cl.⁶ B22D *17/12;17/30*
U.S. Cl. 164—113 **41 Claims**

1. A method for casting metals comprising the steps of:
(a) providing a die defining a cavity, an aperture communicating with said cavity and a sleeve for receiving metal in a molten condition, said sleeve having a tip positioned for longitudinal movement therein from a retracted position to an extended position;
(b) disposing said sleeve at a fixed angle relative to vertical;
(c) moving said sleeve along a first straight line path from a first position remote from said die aperture to an intermediate

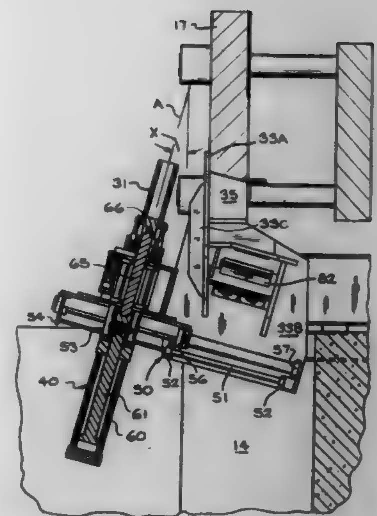

position aligned with said aperture and thereafter along a second path from said intermediate position to an engagement position communicating with said aperture while maintaining the sleeve at said angle;
(d) placing molten metal into said sleeve when said sleeve is in said first position and said tip is in said retracted position; and
(e) moving said tip to said extended position while said sleeve is in said engagement position to inject the molten metal into said cavity.

23. In a machine for die casting molten metal in a die through an aperture, said machine including,
(a) a first movable support,
(b) a sleeve mounted for movement with said first movable support, said sleeve having an upper end for receiving said molten metal,
(c) a first power means for moving said first movable support in a generally upward direction,
(d) a second movable support above said first movable support positioned to be carried thereby upon movement of said first movable support in said generally upward direction, said second movable support being mounted for movement independent of said first movable support,
(e) a second power means for moving said second movable support, and
(f) a shot cylinder having a rod extending therefrom, a shot arm and tip extending from said rod and into said sleeve, said shot cylinder mounted for movement with said second movable support, actuation of said first power means moving said first movable support to carry said sleeve into communication with said die.

5,701,945
AUTOMATED SPIN-CASTING SYSTEM
Kenneth D. McKibben, Defiance, Ohio; Alan P. Gould, Omer, Mich.; Thomas E. Wuepper, Alger, Mich.; Daniel D. Minor, Cadillac, Mich.; Mark T. Salgat, Pinconning, Mich.; David Marthaler, Au Gres, Mich.; Jackie M. Speaks, Cadillac, Mich.; Robert L. Macheske, Tawas City, Mich.; David Good, St. Catharines, Canada; Richard A. Gillette, West Branch, Mich.; Philip L. Bond, Richmond, Ind.; Donald C. Coyle, Richmond, Ind.; Darrell Rentfrow, Richmond, Ind.; Thomas O. Stiens, Richmond, Ind., and Larry M. Stevens, Greensburg, Ind., assignors to CMI-Equipment & Engineering, Au Gres, Mich.
Filed Sep. 7, 1995, Ser. No. 524,780
Int. Cl.⁶ B22D *47/00;5/02*
U.S. Cl. 164—130 **25 Claims**

1. A system for the automated production of castings in a plurality of mold assemblies comprising:
a casting subsystem comprising:

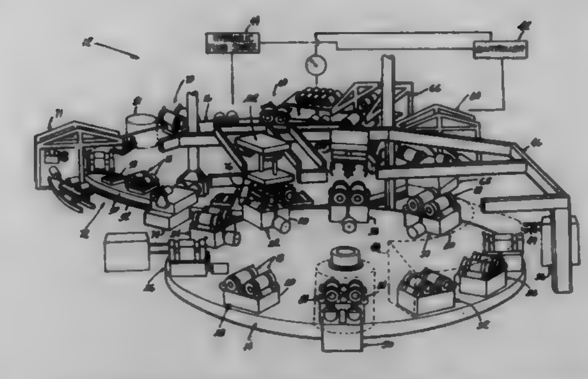

a casting table adapted to rotate about an axis of rotation and having a top surface and at least one mold assembly support module provided on the top surface thereof, the at least one mold assembly support module being adapted for supporting at least one mold assembly; and
a pouring apparatus provided adjacent the casting table and adapted to provide molten casting material to the mold assembly supported by the module;
a processing subsystem comprising:
a processing table adapted to rotate about an axis of rotation, having a top surface and at least one mold assembly support module mounted to the top surface thereof, the mold assembly support module being adapted to support at least one mold assembly; and
a casting removal apparatus provided adjacent the processing table and adapted to remove a casting from the at least one mold assembly supported by the at least one mold assembly support module of the processing table; and
a transfer mechanism adapted to transfer at least one mold assembly from the casting table to the processing table.

5,701,946
APPARATUS FOR SHOOTING FOUNDRY CORES OR MOLDS
Reiner Rommel, Brull hl, Germany, and Ulf Stangler, Ketsch, Germany, assignors to Adolf Hottinger Maschinenbau GmbH, Mannheim, Germany
PCT No. PCT/DE94/00690, § 371 Date Jun. 11, 1996, § 102(e) Date Jun. 11, 1996, PCT Pub. No. WO95/15826, PCT Pub. Date Jun. 15, 1995
PCT Filed Jun. 17, 1994, Ser. No. 656,233
Claims priority, application Germany, Dec. 11, 1993, 43 42 364.7
Int. Cl.⁶ B22C *11/04;13/12;15/26*
U.S. Cl. 164—201 **7 Claims**

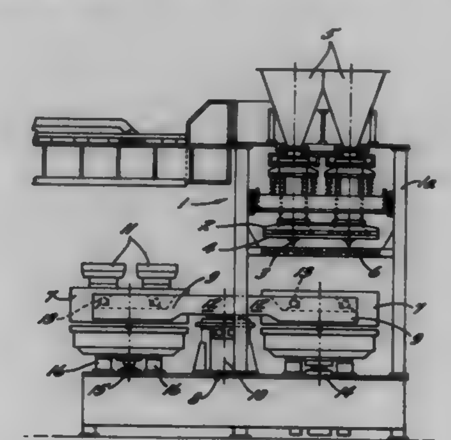

1. An apparatus for molding foundry cores comprising
a support frame,
a shooting head mounted on said support frame,
an upper tool mounted on said support frame below said shooting head,
lower tool,
a tool change mechanism for supporting said lower tool and moving the same between an operative position located below said upper tool and a withdrawn position, said tool change mechanism being rotatable about a vertical axis and including two tool change frames, with each of said tool change frames being configured to support said lower tool thereupon such that the lower tool may be lifted therefrom,
a lifting table mounted to said support frame below said operative position of said tool change mechanism and configured for lifting the lower tool from the mechanism and moving the same upwarding against the upper tool to form a mold which may then be filled by said shooting head, and such that when the lifting table is lowered the lower tool and the resulting molded core are separated from the upper tool and the lower tool is repositioned upon said mechanism, and the mechanism is then able to move the lower tool and molded core to said withdrawn position where the molded core may be removed from the lower tool.

5,701,947
DIE CAST MOULD APPARATUS
Warren J. Bishenden, Newmarket, Canada, assignor to Exco Technologies, Ltd., Ontario, Canada
Filed Nov. 1, 1995, Ser. No. 551,495
Int. Cl.⁶ B22D *17/26;33/04*
U.S. Cl. 164—341 **27 Claims**

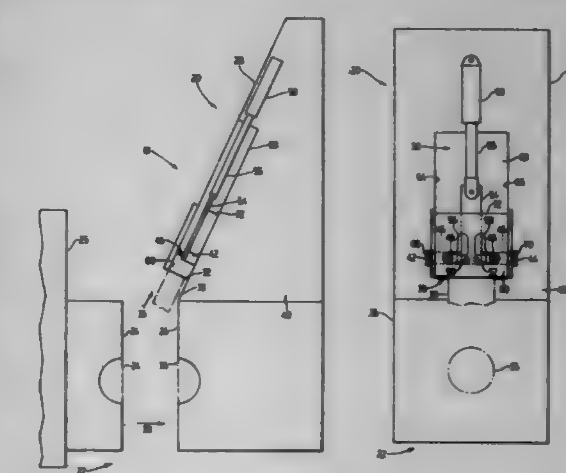

1. A mould apparatus comprising:
a base for supporting a mould body partially defining a mould cavity;
a retainer for supporting a mould body insert in extending relationship therefrom;
said mould body insert for association with said partially defined mould cavity, to further define said mould cavity;
said retainer slidably mounted on a support for movement between a first position whereat said insert is substantially removed from said partially defined mould cavity and a second position whereat said insert is within said partially defined mould cavity to further define said mould cavity;
interlocking means comprising
a first one of a wedge receptor in said retainer and a slidable wedge supported by said retainer, and
a first complementary one of a wedge receptor in said support and a slidable wedge supported by said support; and
camming means interconnecting said retainer and said first wedge for extending said first wedge toward and into said first wedge receptor as said retainer is moved from said first position to said second position such that said first wedge

engages said first wedge receptor when said retainer is in said second position to lock said retainer in said second position.

5,701,948
CASTING STEEL STRIP

Lazar Strezov, Adamstown; Rama Ballav Mahapatra, Yarrawarrah; Fred de Sylva, and Kannappar Mukunthan, both of Merewether, all of Australia, assignors to Iskikawajima-Harima Heavy Industries Company Limited, Tokyo, Japan, and BHP Steel (JLA) Pty Ltd., Melbourne, Australia

Filed Apr. 17, 1996, Ser. No. 630,949
Claims priority, application Australia, May 5, 1995, PN2811
Int. Cl.⁶ B27D *11/06*
U.S. Cl. 164—480 **24 Claims**

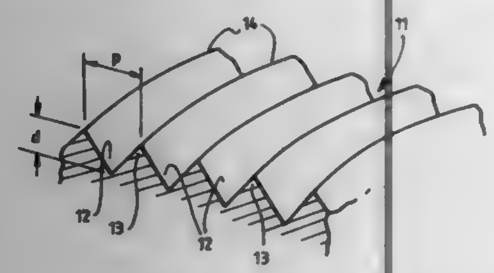

1. A method of continuously casting steel strip comprising supporting a casting pool of molten steel on one or more chilled casting surfaces and moving the chilled casting surface or surfaces to produce a solidified strip moving away from the casting pool, wherein the or each casting surface is textured by the provision of parallel groove and ridge formations of essentially constant depth and pitch, the depth of the texture from ridge peak to groove root being in the range 5 microns to less than 50 microns, and said pitch being in the range 100 to 250 microns.

19. Apparatus for continuously casting steel strip comprising a pair of casting rolls forming a nip between them, a metal delivery nozzle for delivery of molten steel into the nip between the casting rolls to form a casting pool of molten metal supported on casting roll surfaces immediately above the nip, and roll drive means to drive the casting rolls in counter-rotational directions to produce a solidified steel strip delivered downwardly from the nip, wherein the casting surfaces of the rolls are textured by the provision of circumferentially extending groove and ridge formations of constant depth and pitch, the depth of the texture from ridge peak to groove root being in the range 5 microns to less than 50 microns, and said pitch being in the range 100 to 250 microns.

5,701,949
AIR CONDITIONER FOR AN AUTOMOBILE

Hiroyuki Yamaguchi, Aichi-gun; Masayuki Naito, Nagoya; Satoshi Inayoshi, Hekinan; Nobuyuki Doi; Kazunori Saida, both of Kariya, and Yasuhiko Sumiya, Hekinan, all of Japan, assignors to Nippondenso Co, Ltd., Kariya, Japan

Filed Mar. 22, 1996, Ser. No. 624,837
Claims priority, application Japan, Mar. 23, 1995, 7-064116; Apr. 11, 1995, 7-085755; Apr. 17, 1995, 7-091088; Apr. 24, 1995, 7-098868
Int. Cl.⁶ F25B *29/00;* **B60H** *1/00*
U.S. Cl. 165—42 **6 Claims**

1. An air conditioner for an automobile having a passenger compartment, said air conditioner comprising:
- a case having an air passage for introducing conditioned air to said passenger compartment;
- a cooler, disposed in said air passage, for cooling air passing therethrough;

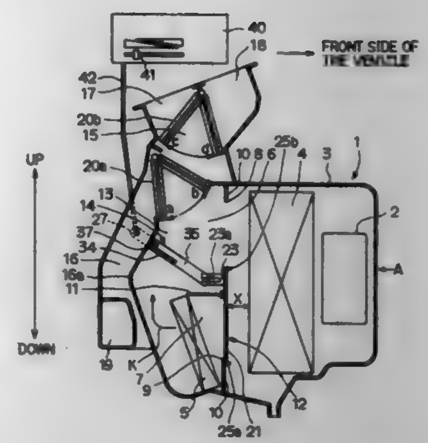

- a heater, disposed on a downstream side of said cooler in said air passage, for heating air passing therethrough;
- a warm air passage through which said heated air passes;
- a cool air passage, bypassing said heater, through which said cooled air passes;
- a cool air/warm air mixing chamber formed at a downstream side of said cool air passage and said warm air passage, for mixing said cool air passing through said cool air passage and warm air passing through said warm air passage;
- a plurality of air outlet passages formed at a downstream side of said cool air/warm air mixing chamber, for introducing air passing through said cool air/warm air mixing chamber into said passenger compartment;
- a sliding door, disposed at an upstream side of said heater, said sliding door being slidable in a crossing direction which is proximate to and substantially parallel to inlets of both said cool air passage and said warm air passage, for controlling a ratio between a volume of air flowing to said warm air passage and a volume of air flowing to said cool air passage; and
- a link mechanism connected to said sliding door, for operating said sliding door in said crossing direction, said link mechanism being disposed in a space leading from said cool air passage to said cool air/warm air mixing chamber, said link mechanism being disposed downstream of said sliding door.

5,701,950
WATER FEED DEVICE FOR HUMIDIFICATION AND AIR CONDITIONING APPARATUS INCORPORATING THE SAME

Toshihide Imamura; Kanichi Kadotani; Bunji Hayakashi; Hisaakira Imaizumi; Tetsuo Shakushi; Toshihiko Matsumoto, and Genichiro Watanabe, all of Kanagawa-ken, Japan, assignors to Komatsu Ltd., Tokyo, Japan

Division of Ser. No. 537,865, Jan. 22, 1996, Pat. No. 5,609,296.
This application Dec. 17, 1996, Ser. No. 767,805
Claims priority, application Japan, Aug. 12, 1993, HEI 5-200741; Aug. 12, 1993, HEI 5-200752
Int. Cl.⁶ F25D *17/06;* **B01F** *3/02*
U.S. Cl. 165—222 **5 Claims**

1. An air conditioning apparatus, characterized in that a cooling dehumidifier unit, a heater unit, a humidifier unit and an air blower unit are successively arranged within an air duct which is provided in a housing in a horizontal direction; that said air duct is provided with an outlet side that is connected to an outlet duct which is opening towards an area to be air conditioned; that downwards of respective portions of said cooling dehumidifier unit and said humidifier unit in said air duct there are provided a pair of water proof trays, respectively, which are communicated via respective hoses with said cooling dehumidifier unit and said humidifier unit, respectively, and which are provided with a drainage means that is opening to an outside of said housing; and that downwards of said water proof trays and downwards of said air duct there is provided

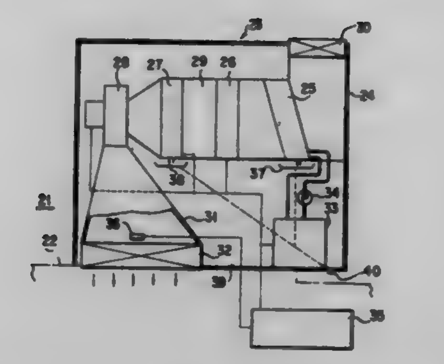

a further water proof tray having a drainage means that is opening to an outside of said housing.

5,701,951
HEAT DISSIPATION DEVICE FOR AN INTEGRATED CIRCUIT

Amigo Jean, No. 18, Alley 5, Lane 19, Nu-Chung Rd., I-Lan City, Taiwan

Filed Dec. 20, 1994, Ser. No. 360,988
Int. Cl.⁶ H05K *7/20;* **H01L** *23/36*
U.S. Cl. 165—121 **4 Claims**

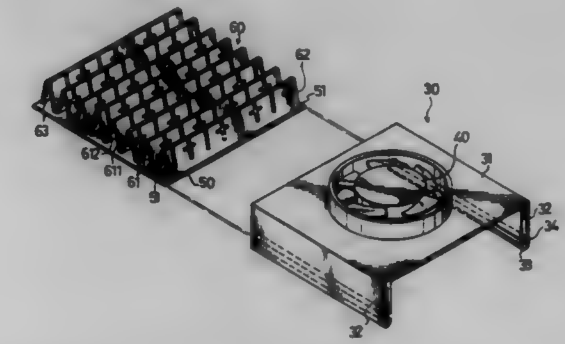

2. A heat dissipation device for an integrated circuit, comprising a heat-conducting base plate having a bottom surface which is adapted to contact an upper surface of the integrated circuit, and a corrugated heat dissipating plate made of a sheet of imperforate heat conducting material and fixed on an upper surface of said base plate, said corrugated heat dissipating plate having a plurality of first bent portions in contact with said base plate, a plurality of second bent portions extending away from said base plate, regions between said first bent portions and second bent portions, and a plurality of ventilation holes formed in said corrugated heat dissipating plate within said second bent portions and said regions, said first bent portions being free of said ventilation holes.

3. A heat dissipation device as claimed in claim 2, wherein said base plate is made of an insulating material so as to prevent electric conduction from the integrated circuit to said base plate.

5,701,952
WATER-CONDUCTING HOUSEHOLD APPLIANCE

Ernst Stickel, Giengen, Germany, assignor to Bosch-Siemens Hausgeraete GmbH, Munich, Germany

Continuation of Ser. No. 205,528, Mar. 3, 1994, abandoned.
This application Jul. 29, 1996, Ser. No. 681,595
Claims priority, application Germany, Mar. 3, 1993, 43 06 643.7
Int. Cl.⁶ B08B *3/04*
U.S. Cl. 165—168 **8 Claims**

1. A water-conducting household appliance, comprising:

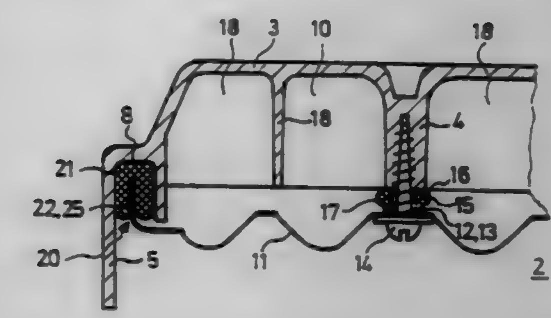

- a container for receiving a heated liquid, said container having a wall;
- a partition of thermally conductive material being disposed in said container adjacent said wall and being substantially water tightly joined with said wall;
- a supply container for receiving a supply liquid, said supply container being formed between said partition and said wall and being thermally conductively connected to said container;

said partition having an outer edge sealed off all the way around relative to said wall; and
- a groove integrally formed in said wall and extending all the way around along said outer edge of said partition, and an encompassing seal being inserted into said groove, said outer edge of said partition resting on said encompassing seal.

5,701,953
WELL HEAD FOR ENVIRONMENTAL EXTRACTION WELLS

Philip P. Stecker, Milwaukee, and Christine M. Liethen, Sheboygan, both of Wis., assignors to CH2M Hill, Inc., Milwaukee, Wis.

Filed Oct. 2, 1996, Ser. No. 724,750
Int. Cl.⁶ B09B *3/00;* **E21B** *33/04;33/068*
U.S. Cl. 166—75.13 **8 Claims**

1. A well head for the top of well pipes extending downward along a bore axis into landfills, the well pipes conducting toxic liquids and gases out of the well, the well head comprising:
- a chamber having a lower base surrounded by upstanding walls, the base including an aperture hermetically connected to an upper lip of the well pipe, the base defining a chamber volume having an area measured across the bore axis substantially greater than an area of opening of the well pipe;
- an upper cover receivable by the upstanding walls to hermetically seal the chamber volume when so received; and
- a hose coupling having one half attached to a wall of the chamber to transfer weight of an attached hose to the wall, the hose coupling further positioned outside an imaginary access cylinder passing along the bore axis into the well pipe

whereby the base aperture may remain unobstructed by supporting structure.

5,701,954
HIGH TEMPERATURE, HIGH PRESSURE RETRIEVABLE PACKER
Marion D. Kilgore, Dallas, and John C. Gano, Carrollton, both of Tex., assignors to Halliburton Energy Services, Inc., Dallas, Tex.
Filed Mar. 6, 1996, Ser. No. 611,867
Int. Cl.[6] E21B *33/129*
U.S. Cl. 166—119 11 Claims

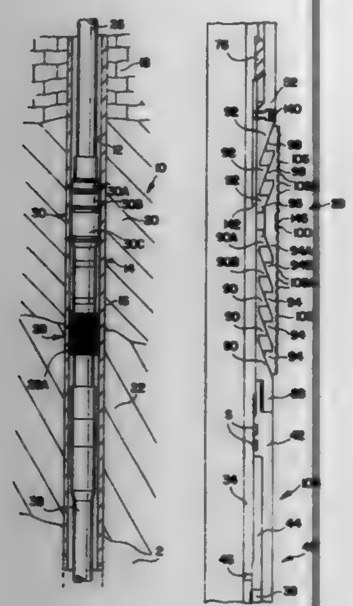

1. A packer for use in a subterranean well, said packer comprising:
a sealing element:
a slip having a longitudinal center and two ends; and,
a plurality of wedges, at least one of the wedges being operably contacted with the sealing element, said wedges being operably associated with said slip, said wedges being capable of applying load transmitted to it to said center of said slip first, and as the load being transmitted to said wedges increases, increasing the load transmitted to said slip, and as the load on said wedges increases the corresponding load on said slip being progressively spread from said center of said slip to said ends of said slip.

5,701,955
DOWNHOLE FLUID CONTROL PROCESSES
Harry Frampton, West Yorkshire, United Kingdom, assignor to Allied Colloids Limited, West Yorkshire, United Kingdom
Filed Dec. 1, 1995, Ser. No. 566,092
Claims priority, application United Kingdom, Dec. 2, 1994, 9424402
Int. Cl.[6] E21B *33/138*
U.S. Cl. 166—295 37 Claims
1. A downhole process for the reduction of the permeability to water of a microporous subterranean formation which has average permeability of not greater than 10 Darcy,
the process comprising
applying to the formation a dispersion in non-aqueous liquid of water swellable, reverse-phase polymerized, substantially spherical particles of absorbent polymer of which at least 90% by weight have a diameter less than 10 μm
whereby the dispersion of the substantially spherical particles of which at least 90% by weight have a size below 10 μm is injected into the micropores of the subterranean formation and the particles are allowed to swell on contact with water and cause the reduction in permeability.

5,701,956
METHODS AND COMPOSITIONS FOR REDUCING WATER PRODUCTION FROM SUBTERRANEAN FORMATIONS
Mary Anne Hardy, Oud Ade, Netherlands, and O. Marlene Isenberg, Duncan, Okla., assignors to Halliburton Energy Services, Inc., Duncan, Okla.
Filed Apr. 17, 1996, Ser. No. 632,790
Int. Cl.[6] E21B *33/138*
U.S. Cl. 166—295 14 Claims
1. A method of reducing the production of formation water from a water producing subterranean zone comprising introducing into said zone an aqueous polymer composition which cross-links after being placed therein and contacting said formation water whereby water produced from said zone is substantially reduced, said composition being comprised of an aqueous salt solution and a graft copolymer of a hydrophilic polymer and a phosphonate.

5,701,957
WELL PERFORATOR ISOLATION APPARATUS AND METHOD
Dan Williamson; James A. Mills, and John J. Ryan, III, all of Anchorage, Ak., assignors to Halliburton Company, Dallas, Tex.
Filed Feb. 5, 1996, Ser. No. 596,819
Int. Cl.[6] E21B *43/11*
U.S. Cl. 166—297 14 Claims

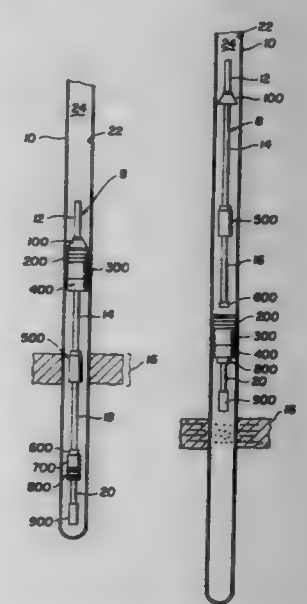

1. A method of perforating a well casing adjacent a subterranean well formation while isolating the formation from well fluids in the remainder of the well, comprising;
placing a remotely operable well packer, a well perforator and a packer closure in the well;
positioning the well packer in the well casing at a position in the well on an uphole side of the perforator and the packer;
operating the well packer to set the packer in a sealing position with the well casing to isolate the perforator and the packer closure from the remainder of well fluids located on the uphole side of the well packer;
operating the well perforator to perforate the well casing at a downhole position below the previously set well packer to provide fluid communication through the well casing wall between the interior of the well casing below the well packer while isolating the well perforation from the remainder of well fluids;
removing the previously operated well perforator from the well in an uphole direction by first passing through a passageway in the well packer and then out of the well to free the well of equipment unnecessary for further treatment or well production; and
moving the packer closure in an uphole direction into contact with the well packer and connecting the packer closure to the well packer to close the packer passageway in the well to prevent fluid communication across the well packer and thereby completing the well perforation while isolating the perforated casing from the well fluids uphole of well packer.

5,701,958
APPARATUS FOR DRILLING PERFORATIONS IN WELL CASINGS
Tom E. Brazlel, P.O. Box 458, La Luz, N. Mex. 88337
Filed Dec. 20, 1995, Ser. No. 575,638
Int. Cl.[6] E21B *43/11*
U.S. Cl. 166—298 7 Claims

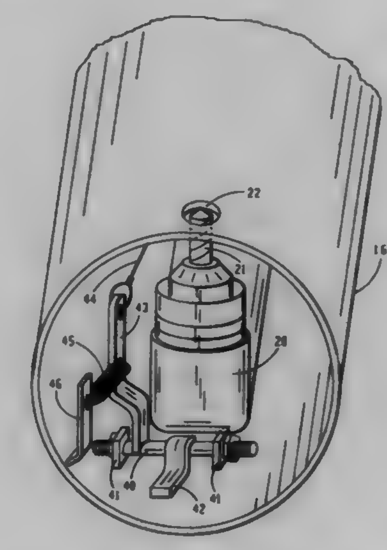

1. An apparatus for drilling perforations in well casings, comprising:
a drill assembly;
transporting means secured to the top end of the drill assembly for lowering the drill assembly down to selected locations within a well casing;
a drill mounted in the drill assembly, the drill being movable between a rest position and a working position for drilling perforations through the well casing at selected locations; and
positioning means connected to the drill assembly and extending out the top of the well casing for moving the drill between the rest position and the working position by an operator above the earth's surface, wherein the positioning means comprises cam means mounted in the housing and a cable connected to the cam means to rotate the cam to force the drill into the working position.

5,701,959
DOWNHOLE TOOL APPARATUS AND METHOD OF LIMITING PACKER ELEMENT EXTRUSION
Donald F. Hushbeck, Duncan, Okla.; Yusheng Yuan, Houston, and Douglas W. Davison, Pearland, both of Tex., assignors to Halliburton Company, Duncan, Okla.
Filed Mar. 29, 1996, Ser. No. 626,193
Int. Cl.[6] E21B *33/129*
U.S. Cl. 166—387 21 Claims
1. A downhole apparatus for use in a wellbore comprising:
a) a mandrel having an axial centerline;

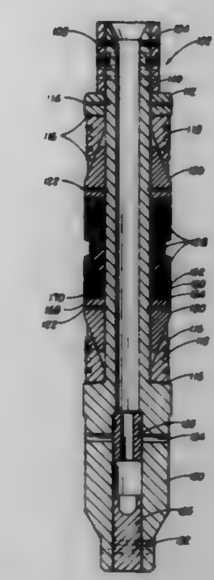

b) a slip means disposed on the mandrel for grippingly engaging the wellbore when set into position;
c) at least one packer element to be axially retained about the mandrel and located at a preselected position along the mandrel defining a packer element assembly;
d) at least one packer element retaining shoe made of a plurality of segments for axially retaining the at least one packer element about the mandrel, the shoe segments further having a cavity for accommodating at least a portion of at least one shoe segment to shoe segment gap-spanning structural member;
e) at least one shoe segment to shoe segment gap-spanning structural member installable into the cavity; and
f) means for retaining the shoe segments in an initial position about the mandrel;
wherein the shoe segment to shoe segment gap-spanning member is of such size and configuration to span a gap that forms between adjacent shoe segments upon the tool being set in the wellbore.

5,701,960
REVERSIBLE PLOUGH
Magne Skjaeveland, Klepp stajon, and Kjell-Egil Stangeland, Klepp, both of Norway, assignors to Kverneland Klepp AS, Kverneland, Norway
Continuation-in-part of Ser. No. 393,000, May 5, 1995, abandoned. This application Dec. 3, 1996, Ser. No. 759,749
Claims priority, application United Kingdom, Jul. 10, 1993, 9314304; Oct. 12, 1993, 9321015
Int. Cl.[6] A01B *17/00*
U.S. Cl. 172—219 18 Claims

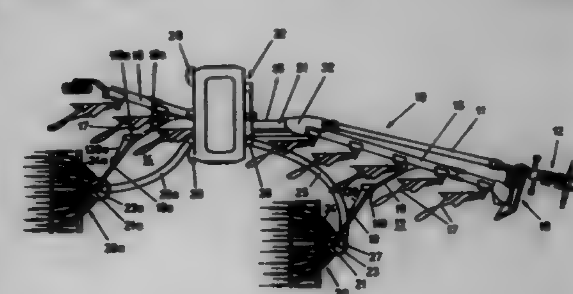

1. A reversible plough adapted to be mounted behind a propelling vehicle with a front and a rear, said plough comprising:
(a) a main beam having a forward end;
(b) coupling means at said forward end of said main beam for coupling the plough to the rear of the propelling vehicle;

(c) a carrying beam pivotally connected to said main beam for movement between a first ploughing position and a second ploughing position, said carrying beam having a forward end and a rear end;

(d) a plurality of pairs of plough bodies mounted along the length of said carrying beam and pivotally moveable with said carrying beam, whereby one plough body of each of said pairs of plough bodies takes up a ploughing position in said first ploughing position of said carrying beam, and said other plough body of each of said pairs of plough bodies takes up a ploughing position in said second ploughing position of said carrying beam;

(e) a soil preparation device engageable with the soil turned-over by said plough bodies, thereby to prepare the soil to receive seed;

(f) a coupling beam mounting said soil preparation device on the plough, said coupling beam being moveable with said carrying beam during each pivotable adjustment of said carrying beam between said first ploughing position and said second ploughing position;

(g) a swivel connection mounting said soil preparation device on said coupling beam, said swivel connection being operative:

(i) to allow said soil preparation device to engage the ground in either said first ploughing position or said second ploughing position of said carrying beam;

(ii) to transmit load during operation from the plough to said soil preparation device, thereby increasing the effectiveness thereof; and

(iii) to permit said soil preparation device during each reversal of said pair of plough bodies to be lifted from the ground on one side of said main beam, to move laterally, and then to be lowered to the ground on the other side of said main beam;

(h) a hopper mounted at a fixed location relative to the combination of the plough and said soil preparation device and for storing at least one of seed and fertilizer;

(i) a distributor mounted on said soil preparation device and arranged to distribute the contents of said hopper on the ground in cooperation with the soil preparation action of said soil preparation device; and

(j) a distribution line extending between said hopper and said distributor, said distribution line being so constructed and arranged as to allow the contents of said hopper to be delivered to said distributor in said first ploughing position or said second ploughing position, and said soil preparation device moving with said coupling beam and said carrying beam during pivotable adjustment between said first ploughing position and said second ploughing position.

5,701,961

ELECTRONIC PUSH TO START NUTRUNNER

Donald R. Warner, Columbia Cross Roads; John A. McCallops, Sayre, and John M. Estep, Granville Summit, all of Pa., assignors to Ingersoll-Rand Company, Woodcliff Lake, N.J.

Filed Jul. 5, 1996, Ser. No. 676,022

Int. Cl.⁶ B23B *21/00;17/00*

U.S. Cl. 173—15 **[illegible] Claims**

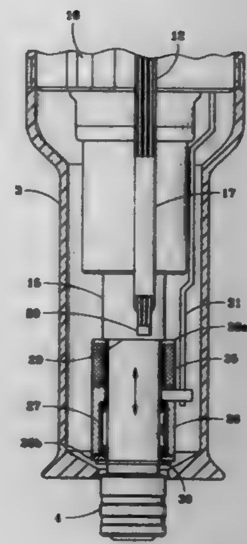

1. A push to start nutrunner comprising:

a power driven nutrunner;

an electronic power controller for controlling power to said nutrunner;

said nutrunner being further provided with a retractable spindle; and

means for magnetically sensing a retracted position of said retractable spindle and for providing a signal of said retracted position to said controller to initiate power to drive said nutrunner.

5,701,962

ARRANGEMENT FOR CONTROLLING THE FEED MECHANISM OF A ROCK DRILL

Heikki Jantunen, Tampere, Finland, assignor to Tamrock Oy, Tampere, Finland

PCT No. PCT/FI94/00404, § 371 Date Mar. 18, 1996, § 102(e) Date Mar. 18, 1996, PCT Pub. No. WO95/08693, PCT Pub. Date Mar. 30, 1995

PCT Filed Sep. 14, 1994, Ser. No. 615,300

Claims priority, application Finland, Sep. 20, 1993, 934111

Int. Cl.⁶ E21B *3/02;7/02*

U.S. Cl. 175—24 **5 Claims**

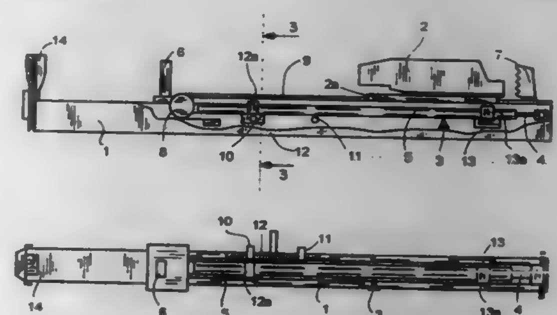

1. An arrangement in the feed mechanism of a rock drill, said arrangement comprising a feed beam, a feed cylinder including a piston rod which is arranged to be stationary in the longitudinal direction of the feed beam and a cylinder sleeve which is mobile in the longitudinal direction of the feed beam, a feed mechanism arranged to be driven by the feed cylinder for providing feed and return motion of the rock drill, a control mechanism for controlling the feed mechanism of the rock drill, an indicator connected so that it moves in the same direction as the rock drill for indicating the position of the rock drill, and at least one sensing element which detects the indicator when the indicator reaches a predetermined position with respect to the sensing element and supplies to the control mechanism a control signal necessary for controlling the motions of the rock drill, wherein said at least one sensing element is mounted on the feed beam of the rock drill along the travel of the cylinder sleeve in such a manner that a sensing area of the sensing element extends inside the feed beam, and further wherein said indicator is secured to the cylinder sleeve inside the feed beam so as to move together with said cylinder sleeve, so that when the rock drill reaches a predetermined position with respect to the feed beam, the indicator secured to the cylinder sleeve causes the corresponding sensing element to supply a control signal to the control mechanism.

5,701,963

CONTINUOUS INJECTION OF AN INERT GAS THROUGH A DRILL RIG FOR DRILLING INTO POTENTIALLY HAZARDOUS AREAS

Steve H. McCormick, and William R. Pigott, both of Idaho Falls, Id., assignors to The United States of America as represented by the United States Department of Energy, Washington, D.C.

Filed Jan. 31, 1996, Ser. No. 594,967

Int. Cl.⁶ E21B *21/00;10/44*

U.S. Cl. 175—215 **3 Claims**

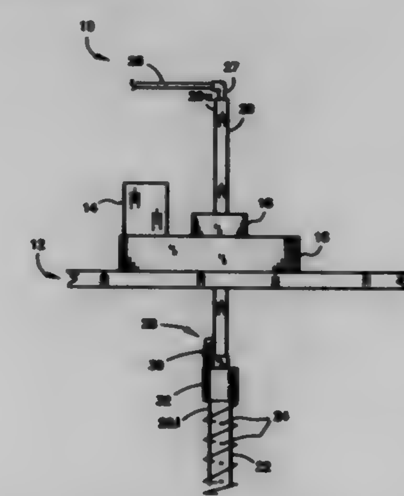

1. A drill rig for drilling in potentially hazardous areas comprising:

a drill rig frame on which a gear motor, gear box, and drive are mounted, a hollow, rotating shaft having an upper end and a lower end, the shaft projecting through the drive and frame; an auger at the lower end of the rotating shaft, the auger having a multiplicity of holes; and, means for supplying and directing an inert gas to the holes in the auger so that inert gas is supplied to the area in which the auger is drilling, thereby preventing a spark from igniting any hazardous gases present in the area.

5,701,964

PERFORATING CHARGE CARRIER ASSEMBLY AND METHOD

Jerry L. Walker, Fort Worth; James P. Lawson, Mansfield, and Bennie C. Gill, Burleson, all of Tex., assignors to Halliburton Energy Services, Inc., Houston, Tex.

Continuation-in-part of Ser. No. 311,284, Sep. 22, 1994, Pat. No. 5,590,723. This application May 22, 1996, Ser. No. 651,229

Int. Cl.⁶ E21B *43/116*

U.S. Cl. 175—4.6 **16 Claims**

1. A perforating charge carrier assembly of the type for insertion downhole through well tubing for use in perforating the well casing, the assembly comprising:

(a) an elongated carrier strip;

(b) a plurality of perforating charges, each perforating charge having:

(i) a focal axis along which a shaped charge explosion occurs in a firing direction when said perforating charge is actuated for use in perforating the casing wall;

(ii) a cross-section that fits within a circle defined by the smallest inner diameter of the well tubing through which the perforating charge assembly is intended to pass; and

(iii) a detonating cord receiver located at the end of said focal axis opposite said firing direction for use in firing said charge; and

(c) at least one mount connecting said plurality of perforating charges to said elongated carrier strip such that:

(i) the cross-sections of said plurality of perforating charges substantially overlap along a line extending parallel to the length of said elongated carrier strip, whereby the overall cross-section of the perforating charge assembly fits within a circle defined by the smallest inner diameter of the well tubing through which the perforating charge assembly is intended to pass;

(ii) at least one of said plurality of perforating charges has its focal axis angularly displaced at least about 30 degrees relative to the focal axis of the next adjacent perforating charge;

(iii) the focal axis of any one of said plurality of perforating charges is angularly displaced from the focal axis of the next adjacent perforating charge no more than about 80 degrees; and

(d) detonation cord interconnecting said detonating cord receiver.

5,701,965

HUMAN TRANSPORTER

Dean L. Kamen, Bedford; Robert R. Ambrogi, Manchester; Robert J. Duggan, Northwood; Richard Kurt Heinzmann, Francestown; Brian R. Key, Pelham; Andrzej Skoskiewicz, Manchester, and Phyllis K. Kristal, Sunapee, all of N.H., assignors to DEKA Products Limited Partnership, Manchester, N.H.

Continuation-in-part of Ser. No. 21,789, Feb. 24, 1993, abandoned. This application May 27, 1994, Ser. No. 250,693

Int. Cl.⁶ B62D *61/12*

U.S. Cl. 180—7.1 **54 Claims**

1. A device, for transporting a human subject over a surface that may be irregular and may include stairs, the device comprising:

(a) a support for supporting the subject, the support having left and right sides and defining fore-aft and lateral planes;

(b) a plurality of support members on each side of the support, each support member being mounted to permit complete travel around an axis and joined to a discrete ground-contacting component, the ground-contacting component having a point of contact with the surface and occupying only a

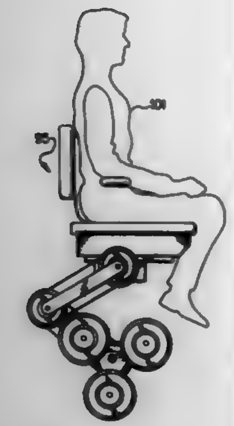

portion of the entire angular distance around the axis; the support and the support members being parts of an assembly;
(c) a motorized drive arrangement, mounted to the assembly, coupled to the support members, for causing locomotion of the assembly and the subject over the surface; and
(d) a control loop, in which the motorized drive arrangement is included, for dynamically maintaining stability in the fore-aft plane by operation of the motorized drive arrangement so that the net torque experienced by the assembly about the point of contact with the surface, taking into account torques caused by gravity as well as by all other external forces and by the motorized drive, causes a desired acceleration of the assembly.

5,701,966
OMNIDIRECTIONAL SELF-PROPELLED VEHICLE FOR GROUND HANDLING OF EQUIPMENT
Peter Amico, Vineland, N.J., assignor to Air Tracks, Inc., Vineland, N.J.
Filed Jan. 11, 1996, Ser. No. 584,428
Int. Cl.^{6} B62D *11/04;57/00*
U.S. Cl. 180—7.2 **34 Claims**

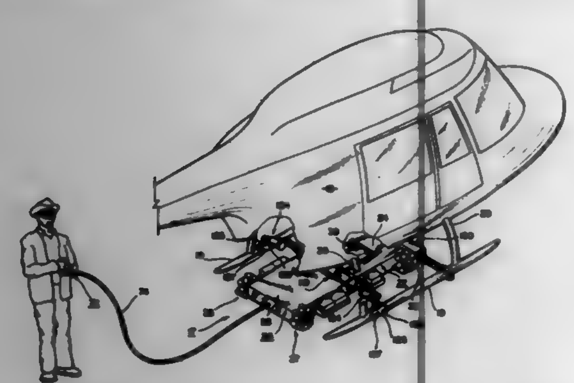

1. A vehicle for ground handling of equipment supportable on the ground by a pair of opposing skids each engageable by a lifting element, said vehicle comprising:
a front chassis having at least one omnidirectional wheel on each side of a longitudinal axis and arranged to support said front chassis for movement over the ground in any azimuthal direction, each of said front omnidirectional wheels comprising a rotatable front hub and a plurality of rollers secured to the periphery of the front hub with their rotational axis disposed angularly with respect to an axis of rotation of the front hub such that the roller axes of the respective front wheels intersect at a point rearwardly of the front hub axes;
a rear chassis having at least one omnidirectional wheel on each side of said longitudinal axis of said vehicle and arranged to support said rear chassis for movement over the ground in any azimuthal direction, each of said rear omnidirectional wheels comprising a rotatable rear hub and a plurality of rollers secured to the periphery of the rear hub with their rotational axis disposed angularly with respect to an axis of rotation of the rear hub such that the roller axes of the respective rear wheels intersect at a point forwardly of the rear hub axes;
pivot means for rotatably interconnecting the front chassis and rear chassis so that they are tiltable relative to each other in a plane transverse to said longitudinal axis;
a lift assembly comprising a center section of adjustable length pivotally mounted on one of said chassis for pivotable movement in a plane substantially parallel to said longitudinal axis, left and right lever arms extending in the direction of said longitudinal axis and each connected at one end to said center section and at the other end to a fitting adapted to engage said lifting element, and a lifting mechanism connected to said center section for causing said pivotal movement such that, when said fittings engage said lifting elements and said lifting elements engage said skids, said equipment may be lifted to an elevated position off of the ground by a lifting force acting substantially through the center of gravity of the equipment and enabling substantially the entire weight of the equipment to be borne by the lift assembly for transport by movement of said vehicle over the ground.

5,701,967
CABLE CONTROL LEVER APPARATUS
Michael A. Barnard, Wichita, Kans., assignor to Wescon Products Company, Wichita, Kans.
Filed Jan. 25, 1996, Ser. No. 591,869
Int. Cl.^{6} A01D *75/20*
U.S. Cl. 180—19.3 **7 Claims**

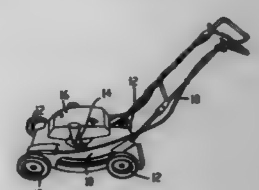

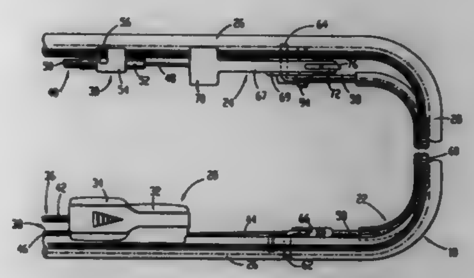

1. In a lawnmower apparatus having a mower deck, a handle bar connected to the deck for permitting walk-behind operation of the mower, and a pair of control cables supported for translational movement relative to the handle bar, the handle bar including a pair of laterally spaced side arms, and an end bar extending between the side arms and connecting them together, each side arm including a transverse hole aligned with the hole in the other arm, a cable control lever apparatus comprising:
a bail including opposed out-turned ends sized for receipt in the holes in the handle bar to permit relative pivotal movement of the bail between a non-actuated position spaced from the end bar of the handle bar and an actuated position against the end bar;
a first coupling means for coupling a first one of the cables to the bail so that movement of the bail is transmitted to the first cable;
a lever supported on one of the out-turned ends of the bail between the bail and the handle bar so that when the bail is in the actuated position, the lever can be pivoted about the one out-turned end of the bail between a non-actuated position and an actuated position,
the lever including a retaining means for retaining the lever in the actuated position, and a release means for releasing the lever from the retaining means when the bail moves to the non-actuated position, allowing the lever to move to the non-actuated position; and
a second coupling means for coupling a second one of the cables to the lever so that movement of the lever is transmitted to the second cable.

5,701,968
TRANSITIONAL POWER MOBILITY AID FOR PHYSICALLY CHALLENGED CHILDREN
Christine Wright-Ott, Cupertino; John F. Wadsworth, San Francisco, and Gerald R. Harris, San Bruno, all of Calif., assignors to Licile Salter Packard Children's Hospital at Stanford, Stanford, Calif.
Filed Apr. 3, 1995, Ser. No. 417,060
Int. Cl.^{6} A61G *5/04*
U.S. Cl. 180—65.1 **20 Claims**

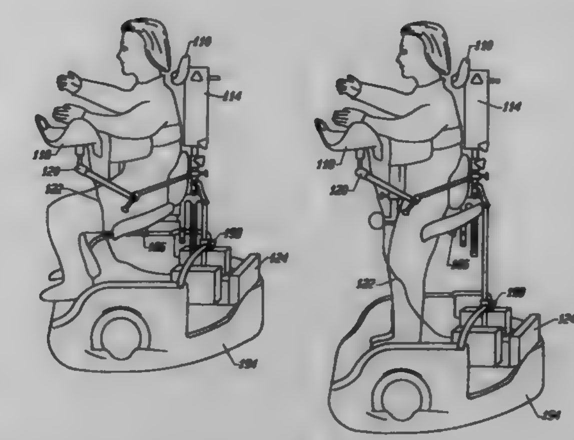

1. A mobility aid providing mobility to a physically challenged child user, comprising:
a base having wheels connected to said base;
a main frame coupled to said base, said base supporting said main frame in a substantially vertical position and said main frame being vertically adjustable to a plurality of vertical heights,
wherein said main frame includes
a lower frame adjustably coupled to said base, and
an upper frame coupled to said lower frame,
a trunk support coupled to said lower frame;
a seat coupled to said lower frame; and
a back support coupled to said upper frame;
whereby said trunk support, said seat, and said back support move vertically as a unit with said main frame in order to support the child user in a plurality of positions.

5,701,969
FRAME BEAMING REDUCTION ASSEMBLY
Donald L. Stephens, LaConner, Wash., assignor to PACCAR Inc., Bellevue, Wash.
Filed May 16, 1995, Ser. No. 441,771
Int. Cl.^{6} B60K *5/00*
U.S. Cl. 180—300 **14 Claims**

1. An auxiliary mass damping system for use on a motor vehicle to reduce frame beaming caused by vibratory forces exerted on the motor vehicle, comprising:

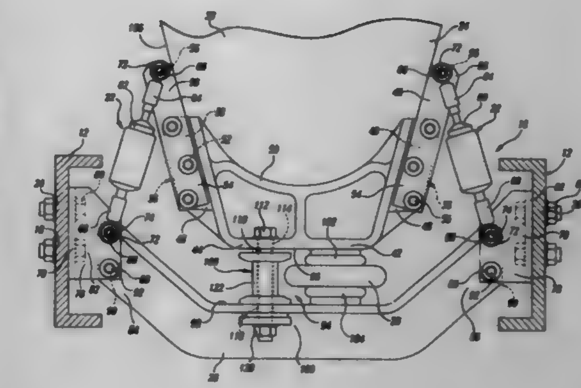

a frame assembly having laterally spaced frame rails and a cross member extending between said frame rails, said frame assembly having a beaming frequency in a first range of frequencies;
an engine attached to said frame assembly, said engine having first mounting portions and second mounting portions, said engine being an auxiliary mass of said auxiliary mass damping system, said engine generating engine vibration during operation of said engine, said engine vibration having a second range of frequencies that is different than said first range of frequencies;
a spring member disposed between said cross member of said frame assembly and a first of said first mounting portions;
a damping assembly disposed between said frame assembly and a second of said first mounting portions of said engine, said damping assembly and said spring member being combined with said auxiliary mass to provide a combination having an offsetting frequency that is substantially equal to said beaming frequency and that offsets said beaming frequency.

5,701,970
DEVICE FOR CONTROLLING THE PRESSURE TO BE SUPPLIED TO A HYDROSTATIC STEERING UNIT
Niels Arbjerg, Sydals, Denmark, assignor to Danfoss A/S, Nordborg, Denmark
PCT No. PCT/DK94/00466, § 371 Date Jun. 5, 1996, § 102(e) Date Jun. 5, 1996, PCT Pub. No. WO95/16599, PCT Pub. Date Jun. 22, 1995
PCT Filed Dec. 14, 1994, Ser. No. 663,204
Claims priority, application Germany, Dec. 16, 1993, 43 42 933.5
Int. Cl.^{6} B62D *5/09*
U.S. Cl. 180—417 **11 Claims**

1. A device for controlling the pressure to be supplied to a hydrostatic steering unit by means of a control signal, having a pressure control device and a rotary slide valve arrangement, having at least two slide valve elements, one of said slide valve elements being rotatable by means of a steering means, another of said slide valve elements including means for correction by means of a measuring motor through which the flow passes, said slide valve elements being rotatable relative to one another through a limited angle of rotation on either side of a neutral setting, and said slide valve elements have control openings which form at least one first throttle, said first throttle being closed in the neutral setting in an intake path to a steering motor, at least one second throttle, said second throttle being closed in the neutral setting in a return of the steering motor, and at least one control throttle, said control throttle being open in the neutral setting and being connected between a tap for the control signal and tank, the control throttle, together with a series throttle, forming a series circuit independent of the intake path of the steering motor, said circuit being supplied from a pressure source and having a closing characteristic that

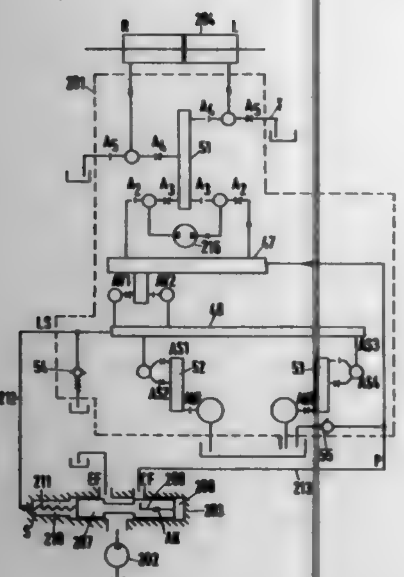

extends substantially across an entire working range of the angle of rotation of the slide valve elements.

5,701,971

PROTECTIVE MEMBER FOR METAL SCAFFOLD KNOTS OR JOINTS

Abazid Amin Rchid, Via Liguria 11, 50145 Firenze, Italy

Filed Oct. 19, 1995, Ser. No. 545,247

Claims priority, application Italy, Nov. 7, 1994, FI940116 U

Int. Cl.⁶ E04G *1/00*

U.S. Cl. 182—179 12 Claims

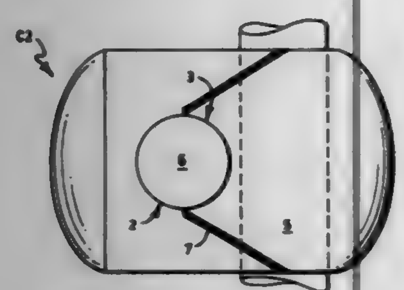

1. A protective cover for a clamp of a scaffold, the protective member comprising:

first and second parts each being substantially identical, each part defining a first and second pair of semi-circular coaxial aligned seats, said pairs of seats being shaped to engage tubular elements held by the clamp, said pairs of seats being substantially orthogonal to each other, said first and second parts being shaped to be substantially complementary for engaging with each other and the tubular elements when one said part is rotated through 90 degrees with respect to the other said part and said parts are positioned on opposite sides of the clamp holding the tubular members, said parts being hollow and defining a cavity for receiving and surrounding the clamp when said parts are positioned on opposite sides of the clamp holding the tubular members, each of said parts has an engaging end for engaging with each other and the tubular elements when said parts are positioned on opposite sides of the clamp, said engaging end having one of said pairs of seats spaced from the other of said pairs of seats and defining a V-shaped opening leading from said one of said pairs of seats to said other of said pairs of seats.

5,701,972

DEVICE FOR ROPING DOWN OR HOISTING PERSONS AND/OR LOADS FROM OR TO GREAT HEIGHTS

Hans Bloder, Mariazeller Strasse 52, 8605 Kapfenberg, Austria, assignor to Hans Bloder, Kapfenberg, Austria

PCT No. PCT/AT93/00129, § 371 Date Mar. 30, 1995, § 102(e) Date Mar. 30, 1995, PCT Pub. No. WO94/03234, PCT Pub. Date Feb. 17, 1994

PCT Filed Aug. 9, 1993, Ser. No. 381,987

Claims priority, application Austria, Aug. 10, 1992, 1606/92

Int. Cl.⁶ A62B *1/14*

U.S. Cl. 182—234 19 Claims

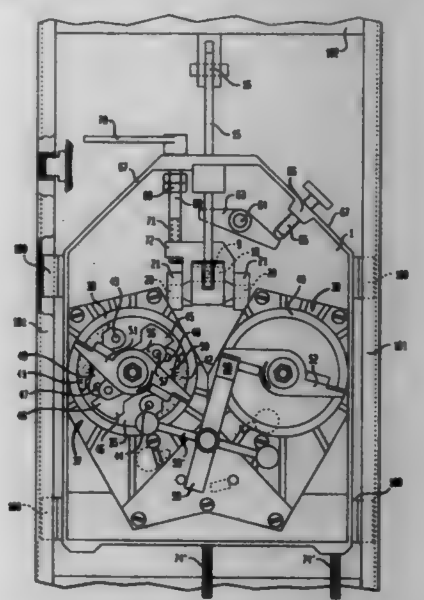

1. Device for roping down or hoisting persons and/or loads from or into great heights, including a suspension, a rope pulley rotatably supported by a base plate via a brake disk, with a brake lining being associated with the brake disk on one side along the base plate and on the other side along a pressure plate which is secured against rotation with a respective brake lining wherein pressure is applied onto the pressure plate by a tension bolt which traverses the brake disk and is connected to the suspension via a force deflection unit via which the weight of the person and/or load being roped down or hoisted is convertible into a tensile force on the bolt, and wherein the brake disk is connected to a concentric gear rim in mesh with a gearing which is supported in the base plate, and further including at least a centrifugal brake unit which is driven by the gearing, wherein the suspension (16) is formed by a tie rod (15) preferably guided for displacement on the base plate (1) and having one end (19) pivotably supported on one arm of a bell-crank lever (17) which is pivotably supported on the base plate (1) and has an other arm pivotably connected with the tension bolt (9).

5,701,973

LINEAR BELT DOOR OPERATOR

Michael J. Tracey, Cromwell, Conn., assignor to Otis Elevator Company, Farmington, Conn.

Filed Jun. 23, 1995, Ser. No. 494,043

Int. Cl.⁶ B66B *13/10;13/14;* E05C *7/06;* E05F *17/00*

U.S. Cl. 187—316 2 Claims

1. In a doorway having a fascia, side edges, and a sill edge plane, a door operator for controlling the operation of a door between an open position and a closed position, said door disposed within a door plane, comprising:

a drive motor disposed in a space between said fascia and said sill edge plane, said drive motor having a drive shaft rotating in an axis parallel to said door plane and disposed intermediate said side edges of said doorway; and

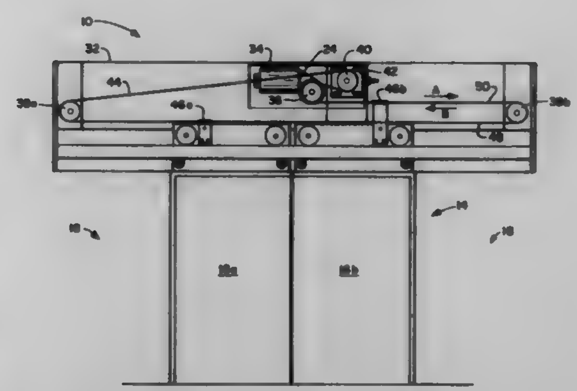

means for connecting said drive motor to said door, including:

a right angle gear box disposed between the drive motor output shaft and a drive pulley, for transmitting rotational motion therebetween, said drive pulley having a rotational axis perpendicular to said door plane;

two stationary idler pulleys, each disposed adjacent one of each of said side edges;

a continuous drive belt, having a first horizontal section running between the first and second idler pulleys and wrapping partially around each, a second horizontal section running between the first idler pulley and the drive pulley, a third horizontal section running between the second idler pulley and an adjustable idler pulley, said belt intermediate said second and third horizontal sections wrapping partially around said adjustable idler pulley and partially around said drive pulley, and running therebetween;

means for securing said door to said belt; and

a mounting plate, secured to said drive motor and said drive pulley, said mounting plate disposed in a space defined by said fascia and said sill edge plane.

5,701,974

RAILWAY HAND BRAKE APPARATUS WITH VISUAL CONDITION INDICATOR

Wajih Kanjo, Lockport, Ill.; Eric Smith, Burlington, Canada; Thomas J. Demoise, Export, Pa.; Michael Girotti, Thorold, Canada; Thomas McCabe, Monroeville; Charles B. Fessler, Lancaster, both of Pa., and Scott Natschke, Kankakee, Ill., assignors to Westinghouse Air Brake Company, Wilmerding, Pa.

Division of Ser. No. 278,937, Jul. 22, 1994. This application Aug. 16, 1995, Ser. No. 486,108

Int. Cl.⁶ F16D *66/00*

U.S. Cl. 188—1.11 R 2 Claims

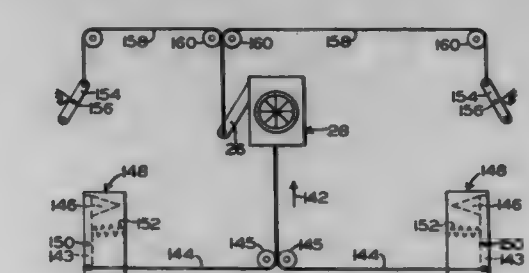

1. A railway brake system for a railway train having a locomotive and at least one railway car equipped with brakes, said brake system comprising:

(a) a first means for applying such brakes to inhibit movement of such railway train;

(b) a second means operable under certain predetermined conditions to cause said first means to apply such brakes;

(c) a third means normally in a first condition but responsive to an application of such brakes by operation of said second means to assume a second condition; said third means further including;

(1) a pair of cables, each of which is connected at a first end to such brake actuator mechanism;

(2) a pair of levers, each of which is connected at one end to a second end of one of said cables;

(3) a pair of housings within each of which one of said levers is pivotably connected and, when said brake actuator mechanism is deactuated, one of said levers is located; and

(4) a pair of tension springs, each of which is connected between one of said levers and a fixed point within one of said housings so as to situate said levers within said housings when said brake actuator mechanism is deactuated, such that when said brake actuator mechanism is actuated, said cables are pulled towards said brake actuator mechanism thereby pivoting said levers out of said housings against a counteracting force of said tension springs;

(d) a fourth means effective when said third means is in said second condition to provide an indication thereof, said fourth means including a pair of flags, each of which is attached to another end of one of said levers, such that when said levers pivot out of said housings against said counteracting force of said tension springs, one of said flags is placed in a position visible from each side of such railway train;

(e) a pair of remote release levers, each of which is connected pivotably on one side of such railway car; and

(f) a pair of chains, each of which is connected at a first end to one of said remote release levers and at a second end to such hand brake lever, such that when at least one of said remote release levers is pulled, such hand brake lever moves thereby deactuating said brake actuator mechanism and retracting said flags into said housings.

5,701,975

RAILWAY VEHICLE BRAKE SYSTEM

Michael G. Hawryszkow, Munster, Ind., assignor to Westinghouse Air Brake Company, Wilmerding, Pa.

Filed Jun. 14, 1996, Ser. No. 664,392

Int. Cl.⁶ B60T *11/10*

U.S. Cl. 188—52 20 Claims

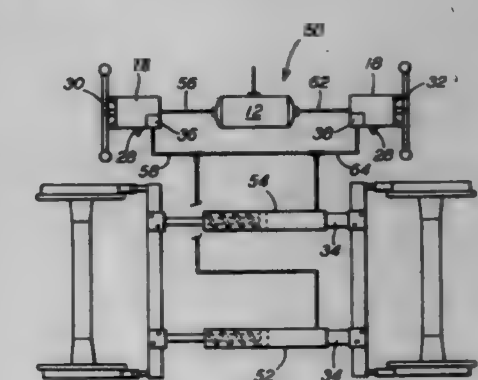

1. An improved railway freight car type parking brake system, said parking brake system comprising:

(a) at least one reservoir for containing a predetermined volume of a predetermined fluid type media;

(b) at least one cylinder activated in a first direction by said fluid type media, and spring released in an axially opposed second direction;

(c) at least one fluid media type pump means connected for fluid communication between said at least one reservoir and said at least one cylinder, said fluid media type pump means being further connected to receive said predetermined fluid type media from said at least one reservoir via a first fluid supply line and to communicate said predetermined fluid type media

to said at least one cylinder during a parking brake application via a second fluid supply line and to return said predetermined fluid type media from said at least one cylinder via said second fluid supply line to said at least one reservoir via said first fluid supply line when said parking brake is released;

(d) pump activation means connected to said at least one fluid media type pump means for initiating communication of said predetermined fluid type media;

(e) an adapter means secured to a first predetermined end of said at least one cylinder for enabling said improved parking brake system to be adapted for engagement with different type brake beam configurations used in railway freight car type braking systems; and

(f) a jaw-like member connected at one end thereof to an axially opposed second end of said at least one cylinder for transmitting a predetermined force to a brake beam carrying brake shoes thereon which frictionally engage with a portion of a tread surface of a respective wheel.

5,701,976

HYDRAULIC BRAKE FOR TRANSMISSION

Yorinori Kumagai; Yoshihiro Kodama; Yoichi Kojima, and Kiminobu Terao, all of Saitama, Japan, assignors to Honda Giken Kogyo Kabushiki Kaisha, Tokyo, Japan

Filed Jun. 22, 1995, Ser. No. 493,481

Claims priority, application Japan, Jun. 22, 1994, 6-140583; Feb. 13, 1995, 7-023970

Int. Cl.⁶ F16D *25/0638*

U.S. Cl. 188—71.5 **10 Claims**

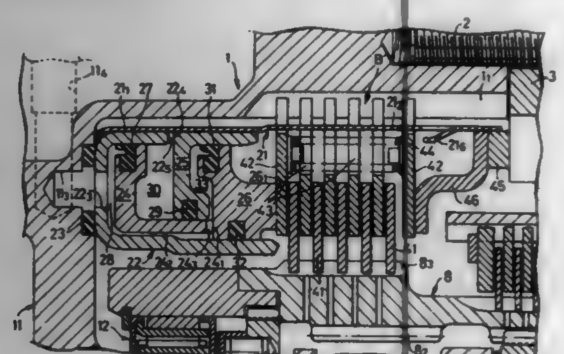

7. A hydraulic brake for a transmission of a vehicle, the hydraulic brake having

an assist piston, a reaction piston and a main piston which are axially disposed and movable on a cylinder for imposing engaging forces on frictional engaging elements of the brake, the assist piston having a first acting portion at an axial front portion for engaging and urging an axial rear portion of the main piston, the main piston having a second acting portion at an axial front portion of the main piston for imposing engaging forces on said frictional engaging elements of the brake, an improvement comprising, said first and second acting portions being located at least partially at equal radial distances from an axis of the brake.

5,701,977

ESTOP—EMERGENCY STOPPING DEVICE FOR MOTORIZED UNCAGED VEHICLES

Theodore Shane Vrevich, West 5895 Clemetson Rd., Coeur D'Alene, Id. 83814

Filed Oct. 15, 1996, Ser. No. 730,347

Int. Cl.⁶ F16D *65/14;55/08;* **B60K** *28/00*

U.S. Cl. 188—72.9 **2 Claims**

1. A braking system for an all terrain vehicle comprising:

a caliper, an arming shaft slidably connected to the caliper, an actuating lever connected to the caliper and attached at one

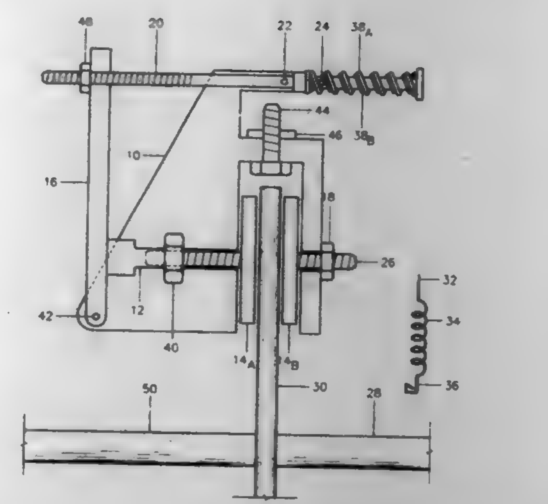

end to the arming shaft, a connecting element connected to a brake pad and adapted to apply a braking force through said pad to a brake rotor, and at least one compressed spring connected to the arming shaft which maintains the arming shaft in an energized condition by a releasable trigger pin connecting said shaft to said caliper, said trigger pin attached to a tether which in turn is adapted to be attached to the driver of an all terrain vehicle;

whereupon removal of the trigger pin allows said at least one compressed spring to expand thereby moving said arming shall from said energized condition to an activated condition to apply said brake pad to said rotor, via transmission of force through said actuating lever and said connecting element to said brake pad.

5,701,978

SET OF BRAKE PADS FOR FLOATING-CALIPER DISC BRAKE

Rolf Weiler, Eppstein, and Wolfgang Schiel, Frankfurt am Main, both of Germany, assignors to ITT Automotive Europe GmbH, Frankfurt, Germany

PCT No. PCT/EP94/03828, § 371 Date Nov. 18, 1996, § 102(e) Date Nov. 18, 1996, PCT Pub. No. WO95/14868, PCT Pub. Date Jun. 1, 1995

PCT Filed Nov. 18, 1994, Ser. No. 656,278

Claims priority, application Germany, Nov. 27, 1993, 43 40 454.5

Int. Cl.⁶ F16D *55/00;65/40;65/02;55/224;65/092*

U.S. Cl. 188—73.32 **10 Claims**

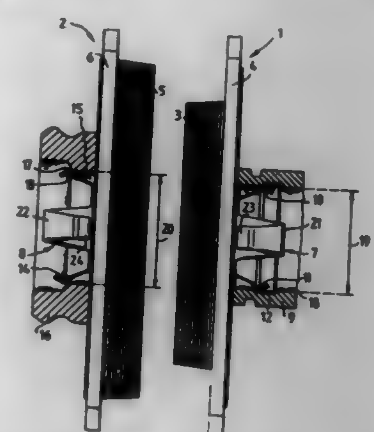

1. A set of brake pads for a floating-caliper disc brake, comprising:

a first brake pad used for abutment on a brake piston on the axially inner side of a floating caliper, the first brake pad including a backplate which carries a first friction lining and has attached to its rear side a first retaining spring for clamping engagement of the first brake pad on the brake piston, and

a second brake pad used for abutment on an external housing leg of the floating caliper, the second brake pad including a backplate which carries a second friction lining and has attached to its rear side a second retaining spring for clamping engagement of the second brake pad on a recess of the external housing leg, wherein the first and second retaining springs respectively include opposed resilient tongues, wherein said first friction lining and said second friction lining are different in shape, and wherein the distance between two opposed resilient tongues of the first retaining spring is different from the distance between two opposed resilient tongues of the second retaining spring, to thereby safeguard said first brake pad against clamping engagement on said recess of the external housing leg and said second brake pad against clamping engagement on said brake piston.

5,701,979

BAG THAT MAY BE CONVERTED INTO A FOLDING BACK REST FOR THE BEACH OR PARK

Jan Harriet Voich, Paseo de la Habana, 14, 28036 Madrid, Spain

Filed Jul. 10, 1996, Ser. No. 677,898

Claims priority, application Spain, Jul. 13, 1995, 9501931

Int. Cl.⁶ B65D *33/06*

U.S. Cl. 190—8 **2 Claims**

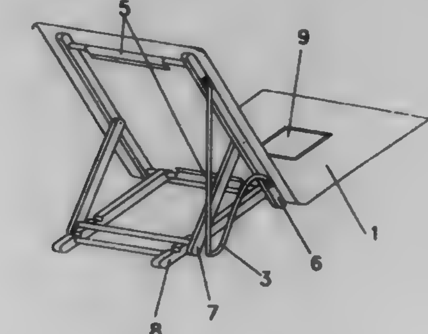

1. A bag convertible into a portable back rest for the beach or park comprising:

a piece of fabric (1), said piece of fabric being foldable in half to a bag having and unfoldable to cover a back rest;

a zipper (2) about edges of said piece of fabric for closing said bag when zipped;

first, second and third structures (6), (7), and (8) for folding and successively fitting one inside the other inside said closed bag and unfolding for providing support for said back rest when said piece of fabric is unfolded;

a strap (3) for carrying said bag; and

a pocket on an outer surface of said piece of fabric when said bag is closed,

wherein said first structure (6) has four bars connected into a rectangular shape, two opposite ones of said bars being on and sewn to one half of said piece of fabric and said strap (2) is attached to said first structure (6).

5,701,980

POWER SUPPLY DEVICE FOR AN ELECTROMOTIVE RAILCAR

Won Ki Lee, Anyang-si, Rep. of Korea, assignor to Daewoo Heavy Industries Ltd., Incheon, Rep. of Korea

Filed Jun. 12, 1996, Ser. No. 662,157

Claims priority, application Rep. of Korea, Jun. 13, 1995, 95-13336(U.M.); Jun. 11, 1996, 96-20852

Int. Cl.⁶ B60L *1/00*

U.S. Cl. 191—4 **6 Claims**

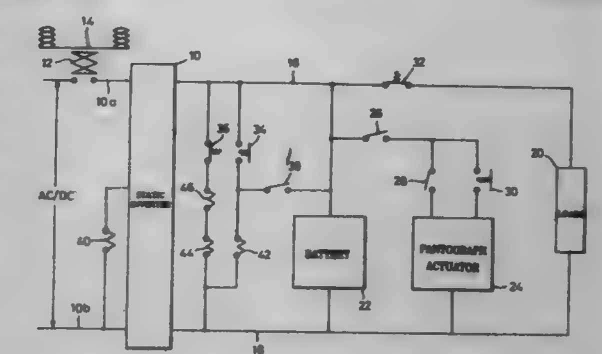

1. A power supply device for an electromotive railcar adapted to receive external current from an overhead electric line via a pantograph and to feed driving current of lower voltage than the external current to electric loads in the railcar through first and second current output lines, comprising:

a static inverter couplable to said overhead electric line through first and second input lines and capable of producing the driving current;

a battery connected to said static inverter in parallel with said loads for selectively charging the driving current and discharging the charged electric current to said loads;

anti-discharge switch means provided on said first current output line for selectively connecting and disconnecting said loads to and from said battery;

discharge control means in cooperative association with said anti-discharge switch means for allowing said anti-discharge switch means to be open when no external current is fed to said static inverter and for causing said anti-discharge switch means to become closed when said static inverter receives the external current from said overhead electric line; and

emergency switch means manually operable and in cooperation with said discharge control means for causing said anti-discharge switch means to be closed so that the electric current stored in said battery is fed to said loads at the time said static inverter delivers no driving current to said loads.

5,701,981

RETRACTABLE POWER CORD

Trevor Marshall, 54 Deerbrook Trail, Scarborough, Ontario, Canada, M1W 1V4; Joseph Wing-Tak Hui, 829 Hoozhang Ct., Cupertino, Calif. 95014, and Thomas Wong, #1001, 3227 King St. East, Kitchener, Ontario, Canada, N2A 3Z9

Filed Mar. 13, 1996, Ser. No. 615,685

Int. Cl.⁶ H02G *1/00*

U.S. Cl. 191—12.4 **22 Claims**

1. A retractable electrical cord apparatus, for interconnection between electrical power means installed in a building fabric and a piece of electrical equipment and comprising:

a hollow housing having inside surfaces, said housing being adapted to be mounted in a standard electrical wiring box in said building fabric;

at least one reel rotatably mounted within the hollow housing and having a reel portion lying in a predetermined plane close to a said inside surface of said housing;

a reel body formed integrally with said reel portion and recessed with respect thereto away from said inside surface of said housing, said reel being formed of a main reel component

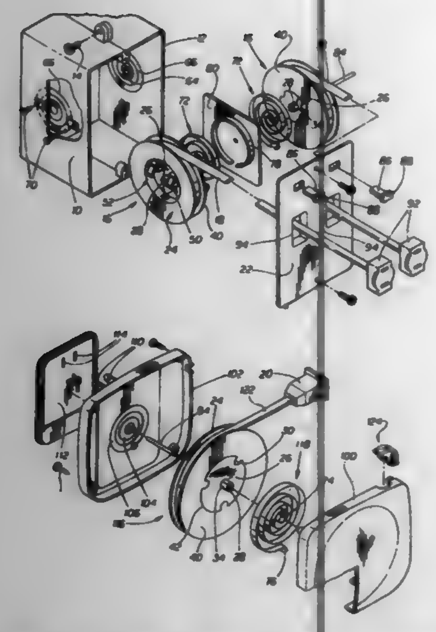

having a flange on one side, and a secondary flange component attached to said main reel component, said recessed reel body being formed in said main reel component;
an electrical cord wound upon said at least one reel;
a retraction spring connected to said reel, and adapted for rewinding the reel to retract the cord;
first and second electrical spring contact members mounted on said reel in said recessed reel body in spaced apart relation said contacts being rotatable in unison with said reel body, and ends of said electrical cord being connected through openings in said reel body to respective said contact members and being rotatable in unison with said reel;
first and second non-rotatable contact rings mounted on said inside surface of said housing and engaged by respective said electrical spring contact members on said recessed reel body, as said reel rotates;
said first and second contact rings being connectable to said electrical power means in said building fabric; and wherein said housing is made up of first and second shell parts, adapted to interfit together to enclose said at least one reel, and wherein said shell parts are secured together, to form said hollow housing, and includes an annular retaining ring means for retaining said retraction spring therein.

5,701,982
LOCKUP CONTROL SYSTEM FOR AUTOMATIC TRANSMISSION
Kazushi Nakatani; Akira Takagi, both of Obu, and Hajime Yokoyama, Toyota, all of Japan, assignors to Nippondenso Co., Ltd., Kariya, Japan
Filed Jul. 10, 1995, Ser. No. 500,367
Claims priority, application Japan, Jul. 11, 1994, 6-158455; Mar. 14, 1995, 7-054023
Int. Cl.^{6} F16H *61/14*
U.S. Cl. 192—3.3 **14 Claims**

1. A lockup control system for an automatic transmission, comprising:
a fluid joint for transmitting a rotary motive power from an input shaft to an output shaft through a fluid;
a lockup clutch mechanism for linking said input and output shafts by bypassing said fluid joint, said lockup clutch mechanism having a fluid chamber which controls closed and open states of said lockup clutch mechanism in response to hydraulic pressure introduced therein;
a duty-controlled electromagnetic valve for controlling a control hydraulic pressure so as to switch said closed and open states of said lockup clutch mechanism; and

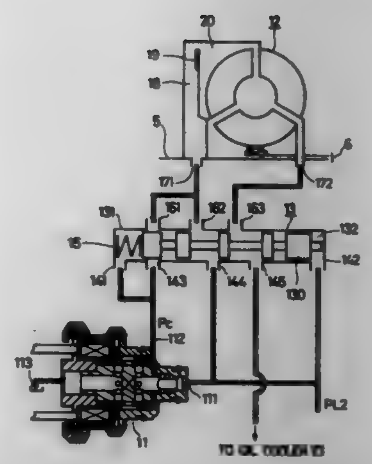

a directional control valve switched between first and second states thereof in response to said control hydraulic pressure controlled by said duty-controlled electromagnetic valve, said directional control valve forming a first hydraulic path for providing a predetermined hydraulic pressure to said fluid chamber to open said lockup clutch mechanism in said first state of said directional control valve and a second hydraulic path for providing said control hydraulic pressure to said fluid chamber to close said lockup clutch mechanism in said second state of said directional control valve.

5,701,983
CLUTCH DEVICE
Shogo Matsumoto, and Kiyohito Murata, both of Susono, Japan, assignors to Toyota Jidosha Kabushiki Kaisha, Toyota, Japan
Filed Feb. 12, 1996, Ser. No. 600,027
Claims priority, application Japan, Feb. 21, 1995, 7-032540
Int. Cl.^{6} F16D *43/20*
U.S. Cl. 192—35 **12 Claims**

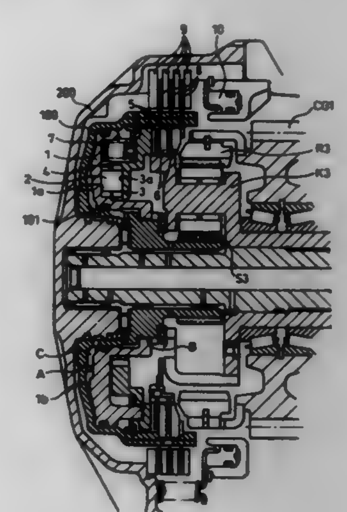

1. A clutch device comprising:
a pair of members disposed at a distance on a common axis and being relatively rotatable to each other on said common axis;
a cam mechanism disposed between said pair of members, said cam mechanism comprising a pair of cam elements, each having a cam surface axially opposed to each other, and a cam roller disposed between said opposed cam surfaces;
a pushing means for selectively pushing said cam mechanism as a whole onto the axially opposed surface of one of the relatively rotating members to convert a circumferential force

to an axial thrust via said cam mechanism so that said relatively rotating members are integrally engaged with each other by said thrust; and
a limiter means for limiting said relative rotational movement of said cam elements when said relative rotation occurs between said members in the direction reverse to that wherein said axial thrust is generated between the pair of members, wherein the limiter means stops further rotation of cam member which hold a cam roller therebetween before edges of the cam member contact the cam.

5,701,984
SYNCHRONIZER FOR AUTOMOBILE TRANSMISSION
Dong-suk Park, Seoul, Rep. of Korea, assignor to Korea Spicer Corp., Inchon, Rep. of Korea
Filed Jun. 13, 1996, Ser. No. 662,925
Int. Cl.^{6} F16D *23/06*
U.S. Cl. 192—53.35 **4 Claims**

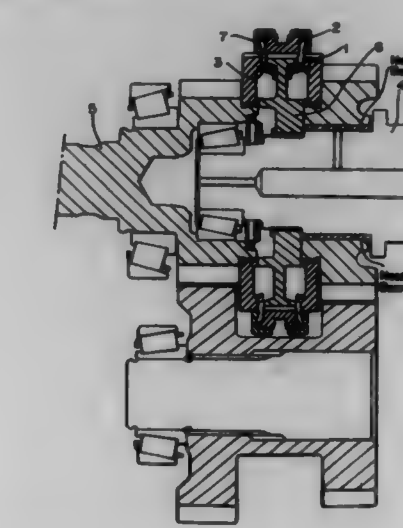

1. A synchronizer for automobile transmission comprising;
a dog clutch(1) rotatable by a mutually rotating gear on a shaft concentric with an input shaft, an outer ring inserted into the dog clutch and having a friction surface(B) formed at its inner surface, a loop spring(3) inserted between the dog clutch and the outer ring(2) and moved with the outer ring, a synchronizer hub(6) engaged with the output shaft by a spline so that they rotate at the same rotating speed and, a sleeve(7) engaged with an outer circumference of the synchronizer hub so that said sleeve rotates with the synchronizer hub at the same rotating speed and having a friction surface(A) formed at its outer circumference so that the sleeve slides during shifting wherein the frictional surface of sleeve(7) and the mutual friction surface(B) have the same sloped angle.

5,701,985
FLUID FRICTION CLUTCH
Hans Martin, Stuttgart, Germany, assignor to Behr GmbH & Co., Stuttgart, Germany
Filed Nov. 28, 1995, Ser. No. 564,572
Claims priority, application Germany, Nov. 29, 1994, 44 42 451.5
Int. Cl.^{6} F16D *35/00;43/25*
U.S. Cl. 192—58.681 **15 Claims**

1. Fluid friction clutch comprising:
a clutch disk forming a driving part,
a clutch housing forming an output part,
a working chamber surrounding the clutch disk,
a shearing fluid storage chamber,

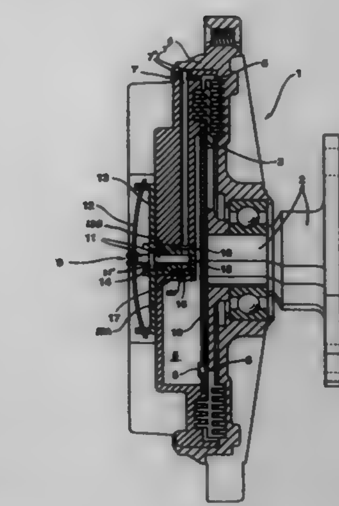

an inflow bore connecting the storage chamber with the working chamber,
a return flow bore leading from the working chamber to the storage chamber,
and an axially movable control piston with control surfaces at its circumference movable continuously between an open position completely opening up the cross-section of the return flow bore and a closed position which completely blocks the cross-section of the return flow bore,
wherein said return flow bore opens radially to the control piston and the control piston surfaces at its circumference serve to block and open said return flow bore in a simple manner without internal passages in the control piston associated with the return flow.

5,701,986
WET CLUTCH ASSEMBLY
Patrick Lorriette, Jaux, France, assignor to Massey-Ferguson SA, France
Filed Dec. 20, 1995, Ser. No. 580,009
Claims priority, application United Kingdom, Dec. 24, 1994, 9426248; Jan. 30, 1995, 9501753
Int. Cl.^{6} F16D *25/0638;13/74*
U.S. Cl. 192—70.12 **2 Claims**

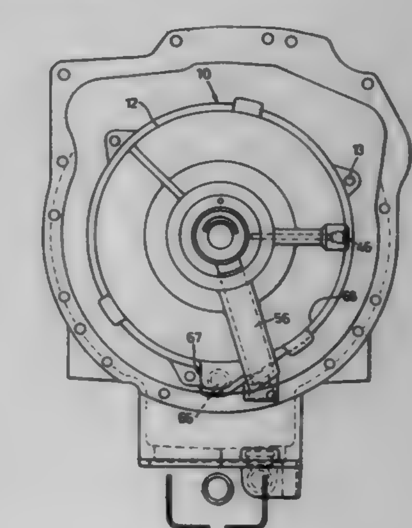

1. A wet clutch assembly comprising a plurality of interleaved clutch members enclosed within a cover, said cover being substantially circular in cross section when viewed along the axis of said assembly, said cover having:

a tangential portion leading up to a generally radially extending shoulder; said tangential portion and said shoulder being integrally formed with said cover;
an oil inlet communicating with an interior of said cover at or near the radial center thereof; and
an oil outlet adjacent to said shoulder, wherein oil entering into said cover is propelled radially outwardly by rotational motion of said clutch members and travels circumferentially around said internal surface building up against said shoulder.

5,701,987

Patent Not Issued For This Number

5,701,988
COIN-OPERATED LOCKER
Kazuo Tsukada, Kanagawa, Japan, assignor to Alpha Corporation, Kanagawa, Japan
Filed Sep. 12, 1995, Ser. No. 526,562
Claims priority, application Japan, Sep. 21, 1994, 6-226837
Int. Cl.^{6} G07F *17/12*
U.S. Cl. 194—241 **6 Claims**

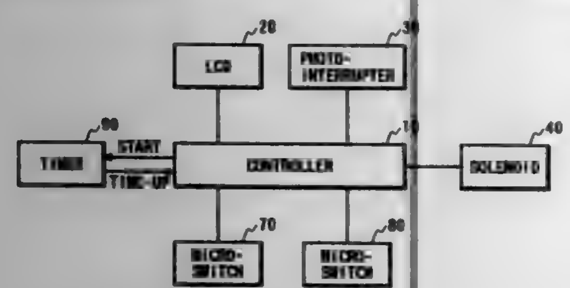

1. A coin-operated locker comprising:
a lock mechanism;
a timer for measuring a predetermined time interval: and
a control means for controlling said lock mechanism so as to permit locking of the lock mechanism when a coin is inserted, and to permit repeated locking and unlocking of the lock mechanism if the predetermined time interval has not elapsed;
wherein the control means statics the timer when the lock mechanism is locked, monitors measurement by the timer, and permits the insertion of a coin and prohibits the locking of the lock mechanism when the measurement by the timer is completed and the lock mechanism is subsequently unlocked,
wherein the operation of permitting the insertion of a coin and the operation of prohibiting the locking of the locker are interlocked through a solenoid means.

5,701,989
CONVEYOR FOR REMOVING AN ARTICLE CONVEYED ABREAST OF ANOTHER ARTICLE
Joseph T. Boone, Greenville, Ind.; Thomas Anthony Hillerich, Jr., Louisville, Ky.; Gerald Robert Grispart, Woodbridge, N.J., and Edward Ydoate, Louisville, Ky., assignors to Sandvik Sorting Systems, Inc., Louisville, Ky.
Continuation-in-part of Ser. No. 388,450, Feb. 14, 1995, abandoned. This application May 28, 1996, Ser. No. 654,193
Int. Cl.^{6} B65G *47/12*
U.S. Cl. 198—448 **21 Claims**

1. A conveyor mechanism for conveying single-file articles in a forward direction while removing articles traveling laterally adjacent the single-file articles, the conveyor mechanism comprising first and second driven conveyor structures respectively forming first and second conveying lanes disposed in parallel as viewed in

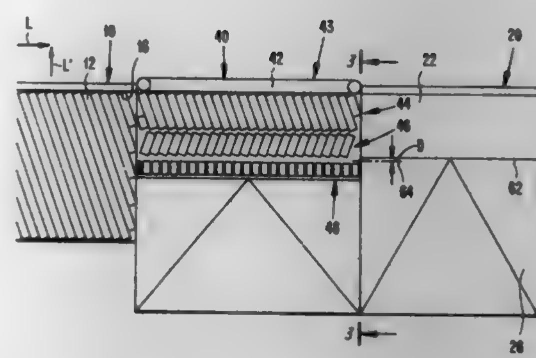

plan and situated immediately adjacent one another; the first and second conveying lanes applying first and second conveying forces, respectively, which are divergent relative to one another; the first conveying force including a forward directional component; the second conveying force including a lateral directional component extending away from the first lane to move articles away from the first lane that are out of contact with the first lane.

5,701,990
SPEED ADJUSTING APPARATUS FOR CONTAINERS
John Novak, Butler, and Lloyd Stivison, West Sunbury, both of Pa., assignors to AGR International, Inc., Butler, Pa.
Division of Ser. No. 559,935, Nov. 17, 1995, Pat. No. 5,624,021, which is a division of Ser. No. 328,479, Oct. 24, 1994, Pat. No. 5,573,103. This application Apr. 16, 1996, Ser. No. 633,274
Int. Cl.^{6} B65G *15/14*
U.S. Cl. 198—604 **38 Claims**

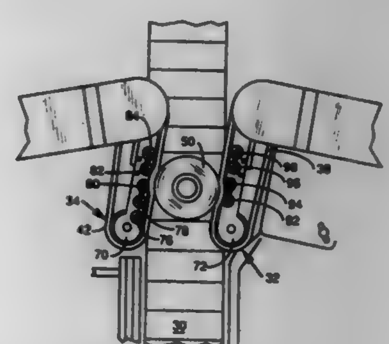

1. Container handling means comprising
container speed adjusting means,
drive means for sequentially delivering a plurality of said containers into contact with said container speed adjusting means,
said container speed adjusting means having endless belt means for contacting each of said plurality of containers and adjusting the speed thereof,
pulley means disposed within and supporting and engaging said belt means,
said pulley means including a plurality of primary pulleys disposed within said belt means adjacent ends thereof and having at least one of said primary pulleys driven,
said pulley means including a plurality of resiliently compressible secondary pulleys to provide shock absorption and support for said belt means,
said container speed adjusting means having a first speed adjusting unit and a second speed adjusting unit spaced from said first speed adjusting unit with a path for travel of said containers disposed therebetween,
each said speed adjusting unit having endless belt means including two vertically spaced endless belts each supported by two said primary pulleys of said pulley means, and

each said adjusting unit having as said resiliently compressible secondary pulleys a plurality of said secondary pulleys disposed between said primary pulleys and in contact with said endless belts.

5,701,991
CLAMPING MECHANISM
Eugene Helmetsie, Spencer, N.Y., assignor to Hi-Speed Checkweigher Co., Inc., Ithaca, N.Y.
Filed Feb. 6, 1996, Ser. No. 597,642
Int. Cl.^{6} B65G *21/20*
U.S. Cl. 198—836.1 **21 Claims**

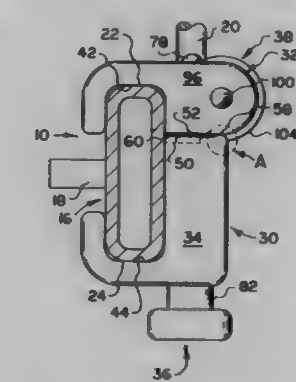

1. A clamping mechanism for adjustably supporting an art device relative to a conveyor, said mechanism comprising in combination:
a rail arranged to extend lengthwise of said conveyor, said rail having opposite lengthwise extending first and second edge portions;
a support bar arranged to depend from said art device;
a clamp body defining first and second recesses for slidably receiving said first and second edge portions, respectively, whereby to support said clamp body for sliding movement lengthwise of said rail, said recesses being tiltable relative to one another to effect releasable clamping of said body against said rail to constrain said clamp body against movement lengthwise of said rail, said body also defining a mounting opening including proximately aligned first and second mounting opening portions for slidably receiving said support bar;
first adjustment means operable for relatively tilting said first and second recesses for releasably clamping said body against said rail; and
second adjustment means operable for releasably clamping said support bar within one of said first and second mounting opening portions, the other of said first and second mounting opening portions being sized to permit free tilting movement thereof relative to said support bar incident to said tilting of said first and second recesses.

5,701,992
SORTING EQUIPMENT
Masahiro Enomoto, Komaki, Japan, assignor to Daifuku Co., Ltd., Osaka, Japan
Filed May 31, 1996, Ser. No. 657,755
Claims priority, application Japan, Jun. 2, 1995, 7-135530; Jun. 2, 1995, 7-135531
Int. Cl.^{6} B65G *37/00*
U.S. Cl. 198—370.06 **5 Claims**

1. A sorting equipment comprising a plurality of running trucks which travel along a definite travelling route in a condition where they are coupled with one another and each of which has at least one carrying means for carrying load laterally relative to a travelling direction of said running trucks, wherein an induction line to be supplied with a high-frequency current is laid along said definite

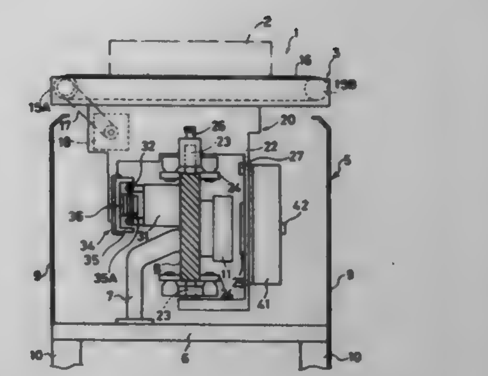

travelling route, wherein a power supply coil for supplying to said carrying means an electromotive force produced due to a magnetic flux produced by said induction line is disposed in said running trucks, wherein said definite travelling route is comprised of electrically conductive members, and wherein at least one of wheels of said running truck which is to be brought into contact with said definite travelling route is made of an electrically conductive material.

5,701,993
POROSITY-FREE ELECTRICAL CONTACT MATERIAL, PRESSURE CAST METHOD AND APPARATUS
Graham A. Whitlow, Murrysville; Mehmet N. Gungor, Pittsburgh, and William R. Lovic, New Kensington, all of Pa., assignors to Eaton Corporation, Cleveland, Ohio
Filed Jun. 10, 1994, Ser. No. 257,990
Int. Cl.^{6} H01H *1/02*
U.S. Cl. 200—264 **3 Claims**

1. An improved electrical contact comprising an alloy of Cu and Cr having a 100% dense, porosity free microstructure, wherein the composition of said contact is about 15–30% by weight Cr material, wherein said alloy has one of a homogeneous Cr distribution and a graded Cr distribution, wherein a preform infiltrated with copper to form said contact is selected from the group consisting of a 25% by weight Cr/25% by weight Cr/50% by weight Cu and 50% by weight Cr/50% by weight Cu.

5,701,994
MULTIPLE BOTTLE PACKAGES
Dennis R. Marsh, Toledo, Ohio, assignor to Owens-Illinois Labels Inc., Toledo, Ill.
Filed Mar. 21, 1996, Ser. No. 619,223
Int. Cl.^{6} B65D *71/08*
U.S. Cl. 206—203 **35 Claims**

1. A multiple bottle package comprising
a plastic tray including a base wall, an integral peripheral wall extending upwardly from the base wall, and an integral peripheral flange extending radially outwardly from the upper edge of the peripheral wall,
said base wall having a plurality of bottle receiving recesses for receiving the bases of bottles,

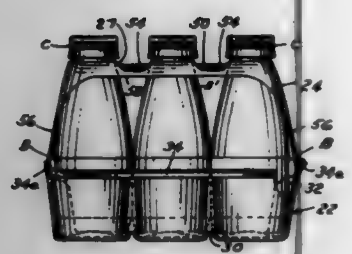

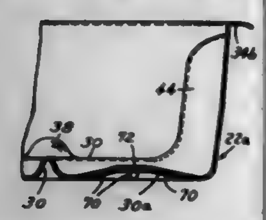

a plurality of bottles corresponding in number with the number of recesses,
each bottle having a base received in a recess in the base wall of said plastic tray,
each bottle having a body portion extending upwardly from said base of said bottle, a tapered shoulder portion and a neck portion with a closure thereon,
said recesses being positioned such that portions of said body portions of said bottles are in abutting relationship,
said peripheral wall having generally vertical undulations engaging said bottles along said peripheral wall,
a canopy overlying and bonded to said tray comprising a thin plastic sheet having openings therein, said bottles having the closures extending through said openings,
said thin plastic sheet engaging the portions of said bottles below said closures,
said thin plastic sheet being stretched taut and having ends bonded to said portions of the peripheral flange thereby applying pressure to said bottles to hold said bottles in stable position in said tray such that the package can be readily handled.

5,701,995
PACKING CASE AND OPENING METHOD THEREFOR
Masahiko Higuma, Tohgane; Masami Ikeda; Naohito Asai, both of Yokohama; Tsutomu Abe, Isehara; Toshio Kashino, Chigasaki; Noriyoshi Ohshima, Tokyo; Takeshi Okazaki, Sagamihara; Hitoshi Sugimoto, Yokohama, and Hiroki Tajima, Kawasaki, all of Japan, assignors to Canon Kabushiki Kaisha, Tokyo, Japan
Continuation of Ser. No. 247,252, May 23, 1994, abandoned.
This application Sep. 19, 1996, Ser. No. 716,090
Claims priority, application Japan, May 25, 1993, 5-122621; May 25, 1993, 5-122946; Sep. 8, 1993, 5-223489
Int. Cl.[6] B65D *25/22;* **B41J** *2/165*
U.S. Cl. 206—205 **11 Claims**

1. A package for accommodating a container cartridge having

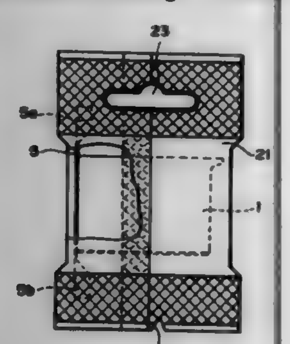

ink therein and provided with an ink supply portion and an air vent, the package comprising:
a package material for accommodating the container cartridge;
a sealing member for sealing the ink supply portion and the air vent of the container cartridge while the container cartridge is accommodated in the package material; and
opening means for permitting opening of said package material for removal of the container cartridge therefrom, wherein at least part of said sealing member is mounted to said package material, and said opening means is positioned relative to said sealing member so that opening said package material by said opening means exposes only a portion of the container cartridge remote from said sealing member.

5,701,996
SNAP-FASTENER BAG
Shuichi Goto, Tokyo; Kenichi Tanaka, and Hiroshi Odaka, both of Himeji, all of Japan, assignors to Idemitsu Petrochemical Co., Ltd., Tokyo, Japan
Continuation of Ser. No. 443,086, May 17, 1995, abandoned.
This application Mar. 3, 1997, Ser. No. 811,231
Claims priority, application Japan, May 17, 1994, 6-102923
Int. Cl.[6] B65D *85/18;30/24*
U.S. Cl. 206—287 **14 Claims**

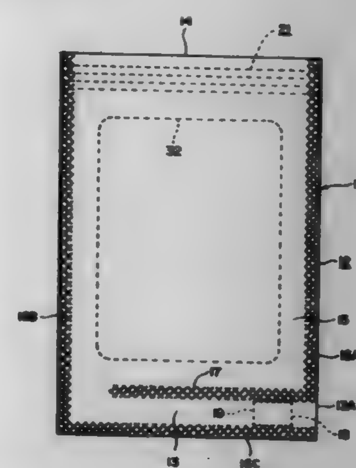

1. A snap-fastener bag comprising a bag body having a storage space and having a deaerating passage therein, cloth goods being stored in said storage space and a resealant provided in said deaerating passage, said resealant having a kinematic-viscosity of $4\times10^{-6}m^2/s$ to $5{,}000\times10^{-6}m^2/s$ (100° C.), said resealant consisting of at least one selected from a group consisting of: polybutene, silicon oil, glycerin, edible oil, and mineral oil, said resealant being adapted to open said deaerating passage in response to a pressure increase due to a compression of said bag body, said storage space and said cloth goods in said storage space.

5,701,997
GLUELESS STORAGE PACKAGE
Patrick J. O'Brien, Hackensack, N.J.; Alvin Thomas, Pittsfield; George Rufo, Jr., Dalton, both of Mass.; Larry Durham, Terre Haute, Ind., and Anthony L. Gelardi, Kennebunkport, Me., assignors to Ivy Hill Corporation, New York, N.Y.
Division of Ser. No. 126,240, Sep. 24, 1993, Pat. No. 5,531,321, which is a division of Ser. No. 70,713, May 28, 1993, Pat. No. 5,425,448. This application Apr. 23, 1996, Ser. No. 636,837
Int. Cl.[6] B65D *85/57*
U.S. Cl. 206—308.1 **43 Claims**

1. A glueless package comprising:
(A) a pair of panels and a spine connecting said panels; and
(B) a compartment formed of plastic and mounted on one of said panels for receiving and maintaining an article therein, said compartment further defining an interior chamber having a

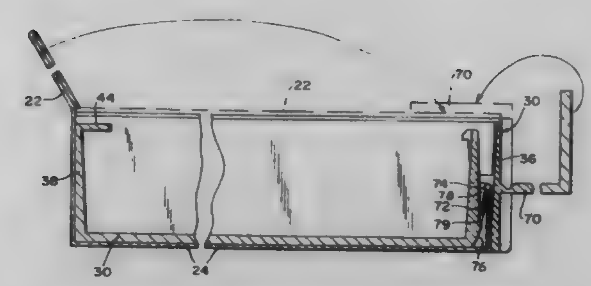

passageway leading from a surface of said compartment into said chamber and a stop ledge defined by said chamber;
said one panel defining at a free edge thereof a resiliently and reversely bent edge portion configured and dimensioned to pass through said passageway into said chamber and to at least partially unbend within said chamber such that the free edge thereof engages said stop ledge to resist removal of said edge portion from said chamber.

5,701,998
BASEBALL BAT COVERS
Eric J. Perry, P.O. Box 411, and Thomas J. Frey, 258 W. Main St., both of Norwalk, Ohio 44857
Filed Jul. 18, 1995, Ser. No. 503,614
Int. Cl.[6] A63B *59/06;* **B65D** *85/20*
U.S. Cl. 206—315.1 **8 Claims**

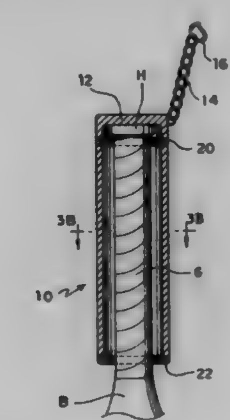

1. A bat handle cover comprising:
a cover of generally tubular configuration having a closed end and an opposite open end, said cover dimensioned and configured to enclose a bat handle having an enlarged head;
a flexible sealing ring mounted within said cover at said open end, said sealing ring for engaging a surface of the bat handle to deter entrance of debris past said sealing ring into said cover; and
a suspension ring permanently affixed to said cover proximate said closed end for removably grasping the bat handle within said cover upon insertion of the enlarged head through said suspension ring, whereby the bat handle is suspended within said cover.
3. A bat handle cover comprising:
a cover of generally tubular configuration having a closed end and an opposite open end, said cover dimensioned and configured to enclose a bat handle having an enlarged head;
a suspension ring permanently affixed to said cover proximate said closed end for removably grasping the bat handle within said cover upon insertion of the enlarged head through said suspension ring, whereby the bat handle is suspended within said cover; and
suspension means attached to said cover at said closed end for hanging suspension of said cover.
5. A bat handle cover comprising:
a cover of generally tubular configuration having a closed end and an opposite open end, said cover dimensioned and configured to enclose a bat handle having an enlarged head;
a first generally U-shaped latch permanently affixed to said cover proximate said closed end; and
a second generally U-shaped latch spaced apart from said first latch, said second latch permanently affixed to said cover proximate said closed end opposite said first latch, said first latch and said second latch removably grasping the bat handle within said cover upon insertion of the enlarged head between said first latch and said second latch, whereby the bat handle is suspended within said cover.

5,701,999
PRODUCT FOR PROTECTIVELY PACKAGING APPLIANCES FOR STORAGE AND SHIPMENT
Stephen Allan Phillips, II; Jeffery Edward Myers, both of Gastonia, N.C., and Robert Bradley Elmore, Florence, S.C., assignors to Modern Polymers, Inc., Cherryville, N.C.
Filed Apr. 17, 1996, Ser. No. 634,047
Int. Cl.[6] B65D *85/30;71/08*
U.S. Cl. 206—320 **16 Claims**

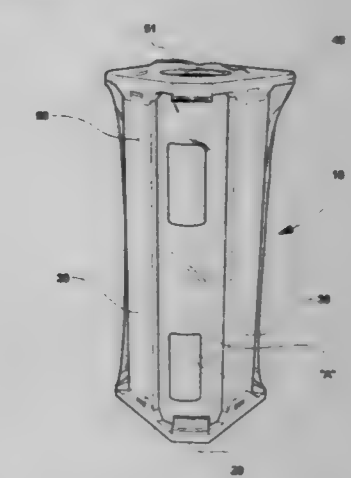

1. A protective shipping and storage package for appliances, comprising:
(a) a polymeric foam protective base cap for being fitted onto a base of an appliance, said base cap defining first and second pairs of mutually opposed planar sides and third and fourth pairs of mutually opposed planar sides adjacent respective ones of said first and second pairs of sides, said first, second, third and fourth pairs of sides extending around a periphery of the base cap;
b) a polymeric foam protective top cap for being fitted onto a top of the appliance, said top cap defining first and second pairs of mutually opposed planar sides and third and fourth pairs of mutually opposed planar sides adjacent respective ones of said first and second pairs of sides, said first, second, third and fourth pairs of sides extending around a periphery of the top cap;
(c) a plurality of planar protective side panels for being positioned in spaced-apart relation around the appliance and interconnecting said base and top caps, said side panels having opposite ends for respectively engaging and cooperating with the third and fourth pairs of opposed sides of the base cap and top cap in the same plane as the third and fourth pairs of sides to form a protective package around the appliance; and

(d) retaining means positioned on and extending around the assembled top cap, base cap and plurality of side panels for securing the protective package in its protective position around the appliance.

5,702,000

Patent Not Issued For This Number

5,702,001

CONTAINER AND METHOD FOR RELAXING SNAGS DURING DISPENSEMENT OF STRIP MATERIAL

William E. Russell, Middletown, R.I.; Barrie G. Hall, Ontario, Canada, and Fernando Medeiros, East Freetown, Mass., assignors to The Moore Company, Westerly, R.I.

Filed Aug. 17, 1994, Ser. No. 291,619

Int. Cl.⁶ B65D *85/00*

U.S. Cl. 206—388 **5 Claims**

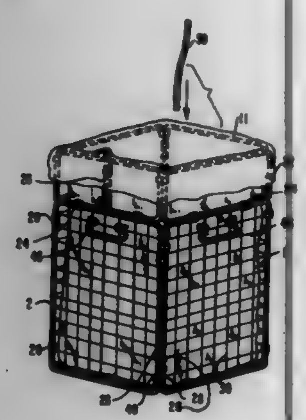

1. A method of eliminating tension spikes in strip material from arising during dispensement that are attributable to loops of the strip material being snagged, comprising the steps of:
imposing confining forces on strip material with a container in a confining position;
creating a condition that causes the strip material to snag with adjacent strip material during transit due to displacement of the strip material during the transit;
relieving the confining forces and thereby relaxing the snags by displacing the container so as to eliminate the creation of the tension spikes during the dispensement that otherwise may arise from unrelieved confining forces acting on the snags;
dispensing the strip material free of the tension spikes after the step of relaxing the snags;
raising flaps to an elevation higher than that of the panels and retaining said flaps at said elevation, said flaps being connected to said panels, removing a compression pad from the container that compresses said strip material, said strip material being elastic, and allowing said strip material to resiliently expand back to an uncompressed state so that a volume displaced by said strip material increases to such an extent that a top portion of said strip material rises above that of said panels and yet becomes confined by said flaps to prevent spillover of the strip material; and
wherein the container has a plurality of panels hingedly connected together, the step of relieving including disconnecting and then swinging apart two adjacent ones of the panels relative to the other to relieve the confining forces exerted by the panels that are imposed on the strip material.

5,702,002

PACKED ELECTRIC LAMP

Guy N. P. Harrison, Bentley near Farnham Surrey, Great Britain, and Wilhelmus J. J. Van Hest, Eindhoven, Netherlands, assignors to U.S. Philips Corporation, New York, N.Y.

Filed Mar. 15, 1996, Ser. No. 616,385

Claims priority, application European Pat. Off., Mar. 17, 1995, 95200655; Jan. 22, 1996, 96200142

Int. Cl.⁶ B65D *85/42*

U.S. Cl. 206—418 **22 Claims**

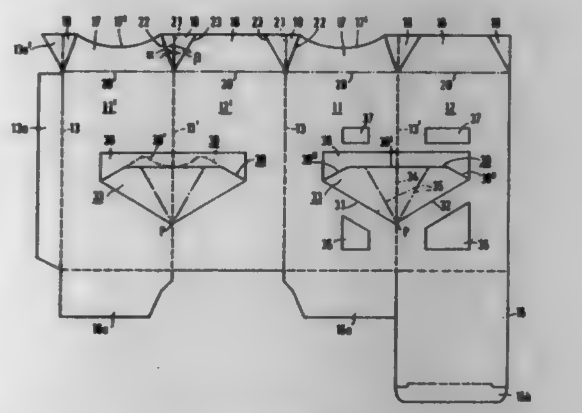

1. A packed electric lamp comprising:
an electric lamp with a light transmitting bulb which has an end portion supporting a lamp cap;
a packaging carton around the electric lamp having a substantially rectangular cross-section, the carton having a first pair of mutually opposed side walls and a second pair of mutually opposed side walls, the pairs of side walls being interconnected along edges of the carton formed on folding lines, the carton having a first end near the lamp cap and a second end opposed thereto near the bulb,
the carton having an incision line through one of the edges and respective side walls adjoining said edge,
boundary lines extending from said incision line in each of the two respective side walls to a point of the edge intersected by the incision line, which point lies closer to the first end, so as to define together with the incision line a region of said side walls which is pivoted into the carton as a folded portion, thus narrowing the carton, the incision line forming an edge of the folded portion,
the carton having means near the second end for blocking passage of the lamp,
characterized in that: the incision line is present in only two of the edges, and the folded portions pivoted into the carton extend towards the lamp cap of the lamp.

5,702,003

BATH TOY STORAGE UNIT

Bonnie L. Springer, 513 Harrison Ave., New York, N.Y. 12839

Filed Oct. 6, 1995, Ser. No. 540,085

Int. Cl.⁶ B65D *25/04*

U.S. Cl. 206—457 **10 Claims**

1. An animal shaped toy storage unit for storing and draining a plurality of wet bath toys, comprising:
a base section;
an upper toy storage chamber in the base section for accommodating a plurality of wet bath toys;
a toy access opening in the base section above the toy storage chamber;
a bath water collecting chamber in the base section below the toy storage chamber for collecting the bath water drained from the toy storage chamber, said bath water collecting chamber having a lesser height than said toy storage chamber;
a perforated bath toy supporting wall in the base section separating the toy storage chamber and the bath water collecting

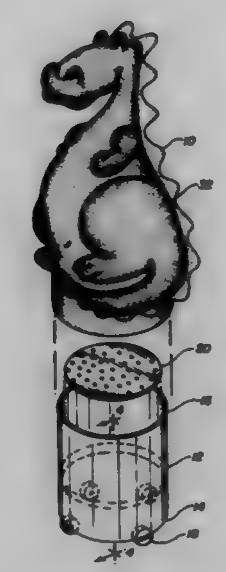

chamber to retain the bath toys in the toy storage chamber while permitting drainage of the bath water through the toy supporting wall; and
a cover for the base section, said cover being removable at least in part to permit access to the toy access opening, the top of the cover being shaped in the form of the head of the animal.

9. An animal shaped toy storage unit for storing and draining a plurality of wet bath toys, comprising:
a base section;
an upper toy storage chamber in the base section for accommodating a plurality of wet bath toys;
a toy access opening in the base section above the toy storage chamber;
a bath water collecting chamber in the base section below the toy storage chamber for collecting the bath water drained from the toy storage chamber;
a perforated bath toy supporting wall in the base section separating the toy storage chamber and the bath water collecting chamber to retain the bath toys in the toy storage chamber while permitting drainage of the bath water through the toy supporting wall; and
a cover for the toy access opening, said cover being removably mounted on the base section to permit access to the toy access opening and having a lower portion which telescopes with at least a portion of the base section, the top of the cover being shaped in the form of the head of the animal.

5,702,004

Patent Not Issued For This Number

5,702,005

PLLC/LCC TUBE

Saragavani Pakerisamy, San Jose, and Wayne H. Tan, Los Gatos, both of Calif., assignors to Advanced Micro Devices, Inc., Sunnyvale, Calif.

Filed Mar. 13, 1996, Ser. No. 614,755

Int. Cl.⁶ B65D *73/02*

U.S. Cl. 206—718 **6 Claims**

1. A PLCC/LCC container for storing and shipping of a plurality of PLCC/LCC packages in a side-by-side arrangement, said PLCC/LCC container comprising:
a tubular body member (24) having a first end and a second end;
said tubular body member having a bore of a substantially rectangular cross-section extending therethrough between said first end and said second end;

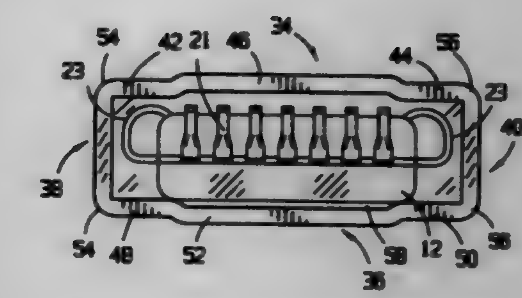

said tubular body member including an upper wall section (34), a lower wall section (36), and a pair of opposed side walls (38,40) all integrally connected together;
a first end plug member (26*a*) disposed slidably and frictionally into the bore adjacent said first end of said tubular body member;
a plurality of PLCC/LCC packages (12) disposed upside down in the bore of said tubular body member to substantially fill the same, each of said PLCC/LCC packages being of a substantially rectangular shape and having opposed side edges, opposed end edges, a top surface, and a bottom surface, said side and end edges being formed with a plurality of terminal means;
said upper wall section having a first flat end portion (42), a second flat end portion (44), and an offset intermediate portion (46) sandwiched between said first and second end portions;
said lower wall section having a first flat end portion (48), a second flat end portion (50), and an offset intermediate portion (52) sandwiched between said first and second end portions;
said first and second end portions (48,50) on said lower wall section (36) supporting only small portion of said top surface adjacent to said side edges (16) of said plurality of PLCC/LCC packages so that the top and bottom surfaces (18,20) thereof are substantially suspended freely between said offset intermediate portions (46,52) on said respective upper and lower wall sections (34,36) of said tubular body member;
said top surface of said plurality of PLCC/LCC packages having an intermediate area which is suspended above the interior surface of said offset intermediate portion (52) on said lower wall portion (36) of said tubular member so as to create a gap (58) therebetween;
a second end plug member (26*b*) disposed slidably and frictionally into the bore adjacent said second end of said tubular body member;
each of said first and second end plug members being formed of a substantially L-shaped cross-section and including an elongated horizontal portion (60) and a upwardly-extending tab portion (62) joined integrally to said horizontal portion; and
the opposite sides of said horizontal portions of said plug members being provided with radially extending fin-like projections (64) which elastically engage the interior surfaces of the bore of said tubular body member.

5,702,006

WORKSTAND FOR BICYCLES

Roger O. Durham, 1370 Thompson Ave., Glendale, Calif. 91201

Filed Oct. 3, 1995, Ser. No. 538,565

Int. Cl.⁶ A47F *7/00*

U.S. Cl. 211—18 **3 Claims**

1. In a workstand for bicycles having handlebars and a saddle, said workstand mounted to a support structure, the combination of;
a) a handlebar support means mounted to said support structure, said handlebar support means including a pair spaced-apart, concave-upward nests for supporting the bicycle handlebars;
b) a saddle engagement means for positioning said bicycle saddle in close proximity with said support structure, said saddle engagement means mounted to said support structure,

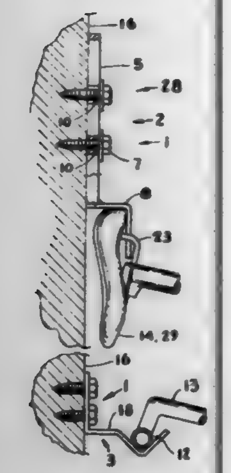

said saddle engagement means including a slide means with a saddle engagement tongue and a guide means adapted for guiding said slide means in a vertical path, whereby said slide means engages said bicycle saddle.

5,702,007
RACK ESPECIALLY ADAPTED FOR USE WITH BICYCLES
Gregory G. Fritz, 1075 Uncochief Cir., Steamboat Springs, Colo. 80477, and Donald J. Patterson, 30 Highland Dr., Steamboat Springs, Colo. 80488
Filed Feb. 2, 1995, Ser. No. 382,619
Int. Cl.[6] B62H *3/08*
U.S. Cl. 211—17 **7 Claims**

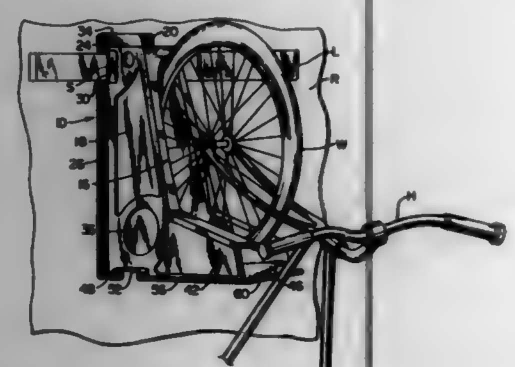

1. A rack for use with bicycles, comprising:
an integral body of open hollow construction including upper and lower legs with spaced rearwardly diverging side walls interconnected in a generally L-shaped configuration;
an arcuate well dimensioned to receive an outer circumferential portion of a bicycle wheel, said well disposed substantially centrally of said upper and lower legs and disposed in a hollow region between said diverging sidewalls such that a plurality of said racks may be stored in nested stacked relation;
web portions extending between front faces of said upper and lower legs and said well;
tubular member receiving means extending transversely through upper ends of said upper and lower legs for receipt of a securing member in securing one or more of said racks in a selected location and configuration and for the purpose of securing a bicycle to said rack; and
a first peripheral flange extending around said upper leg and a second peripheral flange extending around said lower leg, said first and second peripheral flanges disposed in two substantially perpendicular planes and each including at least one pair of aligned notches dimensioned and disposed for receiving a securing member for mounting said rack in a desired location.

5,702,008
MERCHANDISE DISPLAY HOOK WITH POSITIONING SUPPORT FOR PIVOTING LABEL HOLDER
David R. Thalenfeld, Bear Creek, Pa., and Thomas O. Nagel, Blairstown, N.J., assignors to Trion Industries Inc., Wilkes-Barre, Pa.
Filed Jul. 22, 1996, Ser. No. 681,012
Int. Cl.[6] A47F *7/00*
U.S. Cl. 211—57.1 **11 Claims**

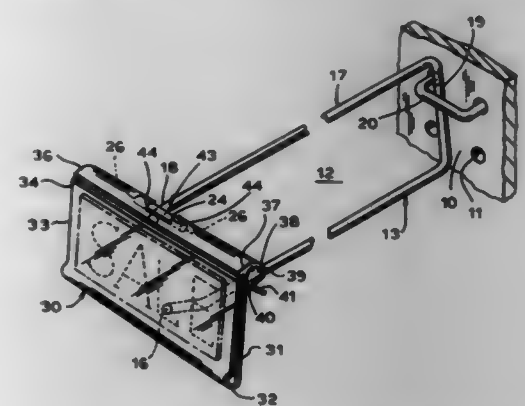

1. A merchandise display hook with pivoting label holder, which comprises,
(a) an outwardly extending merchandise support element,
(b) an outwardly extending label holder arm having a shaft and a cross bar member,
(c) said cross bar member being fixed substantially perpendicular to said shaft of said label holder arm for the support of a label holder,
(d) means associated with an inner end of said display hook for mounting said display hook on a support structure,
(e) a label holder-mounted on said cross bar member and having a label panel for retaining a product information label,
(f) said label holder including a cross bar engaging clip portion for mounting said label holder on said cross bar member,
(g) said cross bar engaging clip portion and said label holder being freely pivotally mounted on said cross bar to accommodate easy product removal from said merchandise support element from a position below said label holder arm, and
(h) a label holder positioning support carried by said merchandise support element and engageable with a back portion of said label panel,
(i) said positioning support being adapted to support said panel in an at-rest position at an easily-visible, upwardly inclined angular orientation and to prevent rearward pivoting movement of said label holder beyond said easily visible, upwardly inclined at-rest orientation while accommodating free pivoting movement of said label holder in a forward direction for product removal and loading.

5,702,009
BOTTLE HOLDER
Gilles Ouellet, and Debra Ouellet, both of 332 Maple Str., Russell, Ontario, Canada, K4R 1B4
Filed Mar. 20, 1996, Ser. No. 618,802
Claims priority, application Canada, Sep. 18, 1995, 2158492
Int. Cl.[6] A47F *7/00*
U.S. Cl. 211—74 **2 Claims**

1. A bottle holder for holding the neck of an inverted bottle while emptying the bottle or concentrating the bottle contents in the neck, comprising a cube-shaped hollow body having a sidewall

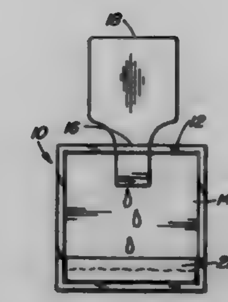

on each of five sides defining a cavity which is open at a sixth side, and wherein at least three of said sidewalls each have a single centrally situated aperture which differs in size from apertures in other sidewalls, the holder being capable of resting on a level surface with a selected one of said apertured sidewalls uppermost, said last-mentioned sidewall being selected to have a size of aperture capable of holding the neck of a particular bottle clear of an opposed sidewall; said different sizes of aperture allowing the holder to be used with bottles of widely differing sizes; said bottle holder further comprising an open-topped container suitable dimensioned for being inserted into said cavity and capable of receiving fluid from a bottle held by said uppermost sidewall.

5,702,010
RETRACTABLE LAUNDRY SUSPENSION ROD
Shan-Kuai Liang, Suite 5, 6F, No. 52, Chung Chin First Street, Ren Der Shiang, Tainan Hsien, Taiwan
Filed Dec. 4, 1995, Ser. No. 566,537
Int. Cl.[6] D06F *57/00;* **A47G** *25/00*
U.S. Cl. 211—105.1 **3 Claims**

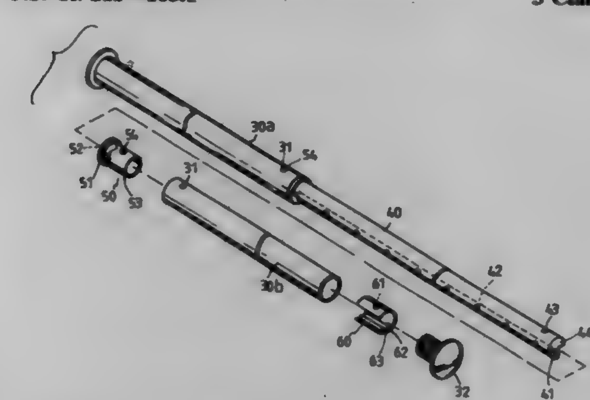

1. A laundry suspension rod comprising:
an inner rod define by (a) a semi-circular elongate rod portion having an arcuate upper surface and a planar bottom surface, and (b) an extension portion extending downwardly from the bottom surface of the semi-circular elongate rod portion, the upper surface of the semi-circular elongate rod portion having a hole formed in each of two opposing ends of the inner rod, the extension portion being adapted to maintain a plurality of clothes hangers in a fixed spaces relationship by means of a plurality of longitudinally spaced apertures formed through the extension portion;
a pair of C-shaped restraining members respectively secured to each of the ends of the inner rod, each of the pair of restraining members including a protrusion formed on an inner surface of a peripheral wall thereof or engagement within the hole in the respective end of the inner rod, the restraining member having a pair of parallel strips extending from the inner surface of the peripheral wall to form a recess therebetween for receiving an edge of the extension portion therein;
a first outer coupled to one end of the inner rod and a second outer tube coupled to the opposing end of the inner rod, each of the first and second outer tubes having a first end for telescopically receiving the inner rod and a second end, each of the first and second outer tubes having a pair of diametrically opposed through holes formed therein adjacent the first end thereof; and,
a pair of stop members respectively secured within the first end of each of the first and second outer tubes, each of the pair of stop members having an open first end and a second end, the second end of each stop member having a slot matching the cross-section of the inner rod, thereby allowing the inner rod to extend through the stop member and allowing the first and second outer tubes to slide along the inner rod, each of the stop members having an outer peripheral wall and a pair of protrusions extending outwardly from opposing sides of the outer peripheral wall for engagement with the pair of through holes in a respective one of the first and second outer tubes, each of said first and second outer tubes movable between a fully extended position where a respective restraining member contacts with an associated stop member and a fully retracted position where the respective restraining member reaches the second end of the associated outer tube.

5,702,011
THIN FLAT PANEL CONSTRUCTION
Francis Alfred Carroll, Dublin, Ireland, assignor to Carroll Products and Designs Limited, Baldoyle, Ireland
PCT No. PCT/IE94/00017, § 371 Date Aug. 15, 1995, § 102(e) Date Aug. 15, 1995, PCT Pub. No. WO94/21927, PCT Pub. Date Sep. 29, 1994
PCT Filed Mar. 24, 1994, Ser. No. 505,283
Claims priority, application Ireland, Mar. 23, 1993, S930223
Int. Cl.[6] A47F *5/00*
U.S. Cl. 211—135 **17 Claims**

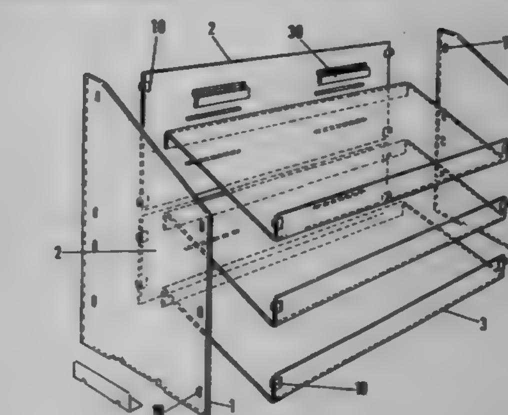

1. A construction comprising at least a first and second thin panel (1,2) of a lightweight material disengageably connected together by a connector means (10), said connector means (10) including a connector (10) having a first and second portion (11,13), wherein the first portion (11) is rigidly secured to the first panel (2) and the second portion (13) is disengageably connected to the second panel (1), and wherein the first portion of the connector is in the form of a socket (11) securable to a formation (15) on the first panel (2) and the second portion is in the form of a resilient clip (13) extendable through the orifice (19) and resiliently engageable across the thickness of the second panel (1).

5,702,012
ROTARY DRAWBAR ASSEMBLY FOR A RAILWAY FREIGHT CAR
Wajih Kanjo, Lockport, Ill., assignor to Westinghouse Air Brake Company, Wilmerding, Pa.
Filed May 24, 1996, Ser. No. 653,465
Int. Cl.[6] B61G *5/00*
U.S. Cl. 213—62 R **17 Claims**

1. A rotary slackless drawbar assembly for connecting one predetermined end of a first railway freight car to an adjacently

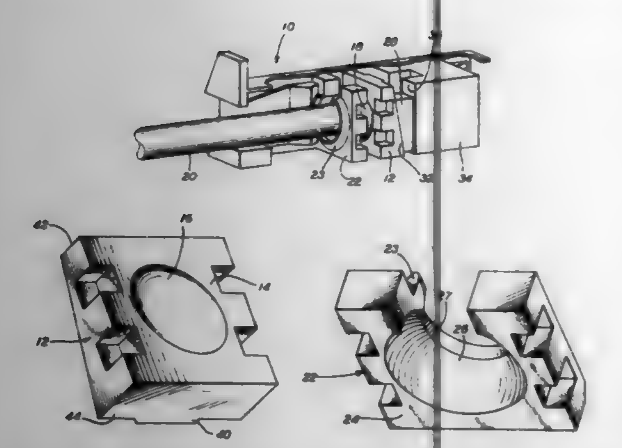

disposed end of a second railway freight car in a substantially semi-permanent fashion, said rotary slackless drawbar assembly comprising:

(a) a rear block member having a substantially flat front face portion, at least said substantially flat front face portion of said rear block member being disposed in a generally vertical direction, said rear block member has a substantially rectangular shape and includes a substantially vertically disposed and centrally located rib-like member extending outwardly from said back surface thereof;

(b) a first spherically shaped cavity formed substantially in a center of said substantially flat front face portion of said rear block member, said first spherically shaped cavity having a predetermined radius of curvature;

(c) a ball-like member having a first portion of an outer surface thereof disposed in said first spherically shaped cavity formed in said substantially flat front face portion of said rear block member, said first portion of said outer surface of said ball-like member having a predetermined radius of curvature;

(d) an elongated drawbar member connected at a first end thereof to a portion of said ball-like member disposed radially opposite said first portion of said ball-like member;

(e) a generally U-shaped front block member having a substantially flat inner face portion, at least said substantially flat inner face portion of said generally U-shaped front block member being disposed in a generally vertical direction; and

(f) a second spherically shaped cavity formed substantially in a center of said substantially flat inner face portion of said front block member, a second portion of an outer surface of said ball-like member located closely adjacent said elongated drawbar member being disposed in said second spherically shaped cavity formed in said substantially flat inner face portion of said front block member, each of said second spherically shaped cavity and said second portion of said outer surface of said ball-like member have a predetermined radius of curvature.

5,702,013

VIRTUAL HINGE

Anna B. Freed, 185 E. 85th St., New York, N.Y. 10028

Continuation-in-part of Ser. No. 324,892, Oct. 18, 1994, Pat. No. 5,520,296, which is a continuation-in-part of Ser. No. 16,148, Dec. 9, 1993, abandoned, which is a continuation-in-part of Ser. No. 850,029, Mar. 12, 1992, Pat. No. 5,297,687. This application Apr. 6, 1995, Ser. No. 417,935

Int. Cl.[6] **B65D** *55/02*

U.S. Cl. 215—206 **34 Claims**

1. A virtually hinged closure, comprising:

(a) a substantially cylindrical lid;

(b) a substantially cylindrical neck member, said lid being movable between a closed and an opened position, said closed position including a locked position and a released position, wherein in said locked position said lid is immovable to said opened position and in said released position said lid is

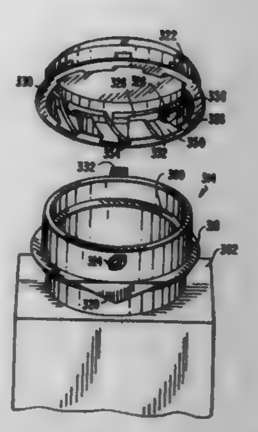

movable to said opened position, said lid being rotatably fixed relative to said neck member in said open position only;

(c) at least one marker position being associated with one of said lid and said neck member;

(d) pointer means for indicating said at least one marker position, said pointer means being associated with the other one of said lid and said neck member;

(e) locking means for rotatably locking said lid to said neck member in said closed position;

(f) selective release means for allowing selective release of said locking means;

(g) a shifting ramp disposed on one of said lid and said neck member for shifting said lid from said released position to said locked position during movement of said lid from said opened position to said closed position; and

(h) dynamic selective engagement means which dynamically cooperates with said selective release means for selectively engaging said lid to said neck member during movement of said lid from said closed to said opened position, said dynamic selective engagement means selectively fixing one of said at least one marker position with respect to said pointer means.

5,702,014

CONTAINER HAVING A CHILD-PROOF, CUP-SHAPED CLOSURE

Arne Bendix Nielsen, Melbyvej 63, DK-3370 Melby, Denmark

Continuation of Ser. No. 530,369, Sep. 27, 1995, abandoned. This application Feb. 28, 1997, Ser. No. 808,064

Claims priority, application Denmark, Apr. 7, 1993, 0418/93

Int. Cl.[6] **B65D** *55/02*

U.S. Cl. 215—217 **2 Claims**

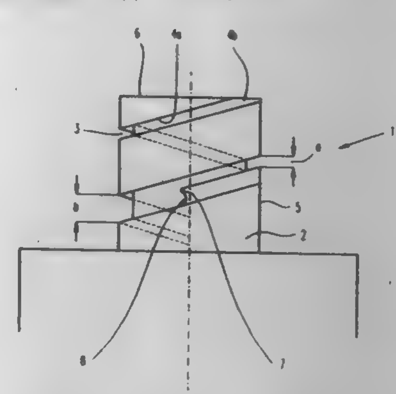

1. A container (1) and child-resistant cap (10), said container (1) having an opening surrounded by an outwardly extending cylindrical neck (2), said neck having a single external thread groove (4) extending over at least one full rotation around said neck (2) for interaction with a radial projection (15) on an internal circular side wall (11) of said cap (10), whereby said thread groove (4) has a

given width with a first side wall (4A) facing said container (1) (1) and a second side wall (4*b*) with a blocking device (7, 8), said second side wall (4*b*) being in frictional engagement with the projection (15) due to a compression of a packing (14) between said cap (10) and said neck (2) when said cap (10) is screwed onto said container neck, the width (b) of said thread groove (4) on a last portion of the rotation which last portion is closest to the container (1), is expanded in axial direction in relation to the width (a) of the remaining outermost portion of said thread groove (4), and in that a passage between said expanded portion and said remaining portion of said thread groove (4) is configured as a stop (7, 8) adapted to catch the projection (15) which lies freely in said thread groove (4) when said compression of said packing (14) is released due to unscrewing said cap (10), if said cap (10) is not pulled away from said container (1) in such a way that said projection (15) lies against said first side wall (4*a*).

5,702,015

CLOSURE SEAL FOR CONTAINER

Joseph M. Giles, Secor; William Bennington, Normal, and Steven Brucker, Gibson City, all of Ill., assignors to Selig Sealing Products, Inc., Forrest, Ill.

Continuation of Ser. No. 237,838, May 4, 1994, abandoned. This application May 8, 1996, Ser. No. 646,946

Int. Cl.[6] **B65D** *43/02*

U.S. Cl. 215—232 **11 Claims**

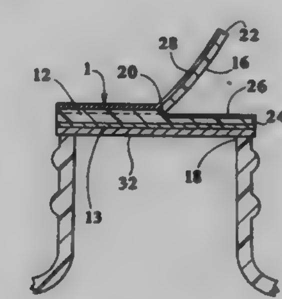

1. A seal for a container comprising:

a seal portion having an upper surface and a lower surface, the lower surface being securable around an opening of the container; and

a unitary-pull tab portion secured across the entirety of said upper surface, the pull-tab portion having a partial separation formed therein to form a pull-tab in the pull-tab portion, a remainder of the unitary pull-tab portion being non-separated such that said unitary pull-tab portion can be completely removed as a unit by operative grasping and pulling of said pull-tab.

5,702,016

BRAUN TUBE FOR A PROJECTION TELEVISION RECEIVER

Dug Gyu Jang, Kyungsangbuk-do, Rep. of Korea, assignor to Goldstar Co., Ltd., Seoul, Rep. of Korea

Filed Dec. 19, 1994, Ser. No. 359,209

Claims priority, application Rep. of Korea, Sep. 16, 1994, 23677

Int. Cl.[6] **H01J** *29/00;* **H01K** *1/28*

U.S. Cl. 220—2.3 A **2 Claims**

1. A projection television, comprising:

a screen; and

a Braun tube for a projection television receiver, the Braun tube including a fluorescent surface having a long side and a short side, wherein a curvature radius of the long side of the fluorescent surface is less than a curvature radius of the short

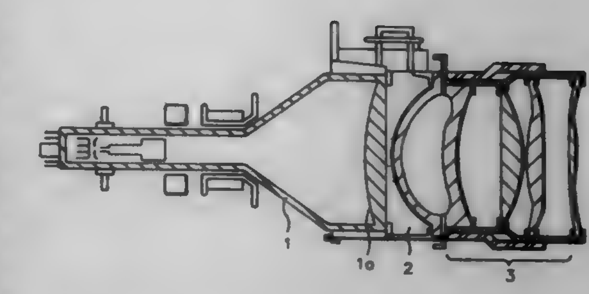

side of the fluorescent surface, and wherein the fluorescent surface is convex relative to the interior of the Braun tube.

5,702,017

COMBINATION OF A ROW OF CONTAINERS AND A STRIP OF CAPS, AND ASSEMBLY OF A CONTAINER AND CAP

Antonin Goncalves, Montmorency, France, assignor to L'Oreal, Paris, France

Continuation of Ser. No. 224,318, Apr. 7, 1994, Pat. No. 5,544,778. This application Feb. 13, 1996, Ser. No. 601,152

Claims priority, application France, Apr. 26, 1993, 93/04881

The portion of the term of this patent subsequent to Apr. 7, 2014, has been disclaimed.

Int. Cl.[6] **B65D** *21/02;41/17*

U.S. Cl. 220—23.4 **8 Claims**

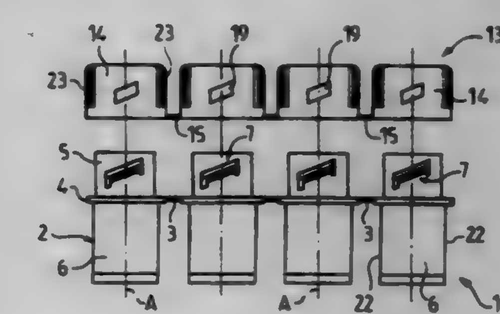

1. Combination, comprising:

(a) a row of containers, each container having a neck, being joined to one another by at least one link which can be easily broken, and an axis which is parallel and in the same plane as the axis of each other container,

wherein each neck includes at least one click-fastener, and

wherein the click-fasteners on the container include at least one projecting, inclined thread portion; and

(b) a strip of caps, each cap being joined to one another by at least one link which can be easily broken, and an axis which is parallel and in the same plane as the axes of each other cap,

wherein each cap includes at least one click-fastener that is complementary to the at least one click-fastener on the neck,

wherein the linked strip of caps is removably attached to the necks of the linked containers by only a translational movement of the caps relative to the containers, parallel to the axes of the containers, with the axes of the containers and the caps being aligned, whereupon the click-fasteners of the caps snap into place against the click-fasteners of the containers, and close the containers in sealing relation and, after each container and corresponding attached cap are separated from the row and strip, respectively, by breaking the respective links, the caps can be removed from the necks by rotational movement of each cap relative to each corresponding neck, via the inclined thread positions of the click-fasteners allowing the rotational movement of the cap,

wherein at least one projecting thread portion has a stop at each end thereof, and

wherein the click-fasteners on the cap each comprises at least one catch capable of being received at the thread portion, between the stops.

5,702,018
POSITIVE SEAL FERMENTATION LOCK FOR WINE BARRELS
Donald C. Montgomery, 1250 Enos Ave., Sebastopol, Calif. 95472
Filed Nov. 2, 1995, Ser. No. 552,103
Int. Cl.⁶ B65D *51/16*
U.S. Cl. 220—203.13 **2 Claims**

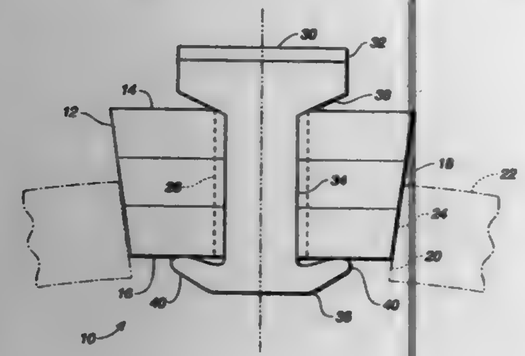

1. A positive seal fermentation lock apparatus for a barrel having a bung hole, said bung hole having an inner circumferential surface, said apparatus comprising:
a generally frusto-conical stopper member having a top surface, a bottom surface, and an outer circumferential surface for sealing against the inner circumferential surface of said barrel's bung hole, said stopper member including a central aperture having a length and a diameters; and
a sealing insert member having a top portion, a middle portion, and a bottom portion, said top portion having a diameter greater than said stopper member central aperture diameter, said top portion having a lower surface for sealing against said stopper member top surface, said middle portion having a length generally equal to said stopper member central aperture length, and a diameter less than said stopper member central aperture diameter, said bottom portion including two flexible lateral projection elements to contact and apply a force against said stopper member bottom surface, so as to urge said top portion lower surface into sealing engagement with said stopper member top surface, wherein when gases form inside the barrel, the resultant pressure will exert a force against said insert member top portion lower sealing surface, and flex said lateral projection elements, breaking the seal formed between said insert member top portion lower sealing surface and said stopper member top surface, allowing the gases to escape.

5,702,019
VIAL HAVING RESEALABLE MEMBRANE ASSEMBLY ACTIVATED BY A MEDICAL DELIVERY DEVICE
Jean Pierre Grimard, Vif, France, assignor to Becton Dickinson France S.A., LePont de Claix, France
Filed Sep. 27, 1995, Ser. No. 534,754
Int. Cl.⁶ A61M *37/00;* **B65D** *41/50; 45/30*
U.S. Cl. 215—301 **25 Claims**

1. A resealable container assembly accessible by a medical delivery device and providing a resealable fluid path between the medical delivery device and the container, comprising:
a container having an open top and a top surface disposed around portions of the container surrounding said open top;
a body disposed adjacent the top surface of the container;

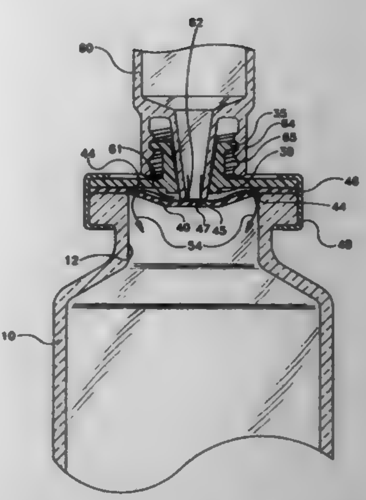

means for communicating fluids with the container, said means having an end configured for introduction of the medical delivery device and an opposed end disposed on said body; and
a membrane disposed between the open top of said container and the opposed end of the means for communicating, said membrane having a central area disposed for contact with the medical delivery device and having a width at least equal to the width defined by the opposed end of the means for communicating, said central area comprising at least one fluid flow channel, said membrane having at least one fluid passage located outside said central area for fluid communication, via said at least one fluid flow channel between the medical delivery device introduced into the means for communicating and the open top of the container, and said membrane defining a sealing portion between said central area and said at least one fluid passage for sealing contact with the body,
wherein upon contact between said medical delivery device and the central area, said membrane is displaced to an open position, wherein said membrane is urged away from said sealing contact with the body to open the fluid path between the medical delivery device and the container.

5,702,020
DRINKING MUG
Randi Bollerup Larsen, Kirke Allé 5, Fousing, DK-7600 Struer, Denmark
Continuation of Ser. No. 367,153, Jan. 10, 1995, abandoned. This application May 15, 1996, Ser. No. 647,647
Claims priority, application Denmark, Jul. 10, 1992, 0905/92; Nov. 6, 1992, 0790/93
Int. Cl.⁶ A47G *19/22*
U.S. Cl. 220—709 **10 Claims**

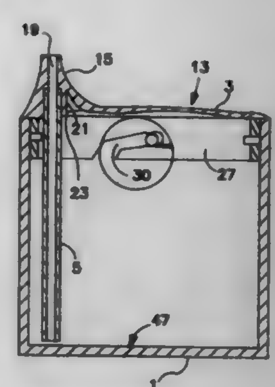

1. Drinking mug comprising a cup defining an opening for filling with liquid, a lid with means for removably connecting said lid to said cup to cover said opening in a gastight fashion, said lid having no air vent therethrough; and at least one continuous suction tube which extends from a mouth at a top side of the mug to an inlet end inside the mug disposed at a relatively short distance over a bottom of the mug, such that when a non-carbonated liquid is sucked from the interior of the mug through the suction tube, a partial vacuum will be created therein above the liquid to prevent further liquid spillage when the suction is discontinued, flow of air into the mug taking place exclusively through the suction tube.

5,702,021
LOCKING CONSTRUCTION OF ELECTRIC CONNECTION BOX
Hirokazu Ito, Yokkaichi, Japan, assignor to Sumitomo Wiring Systems, Ltd., Yokkaichi, Japan
Filed Aug. 9, 1995, Ser. No. 512,830
Claims priority, application Japan, Oct. 26, 1994, 6-262713; Oct. 28, 1994, 6-265688
Int. Cl.⁶ B65D *43/02;45/16;45/18*
U.S. Cl. 220—326 **6 Claims**

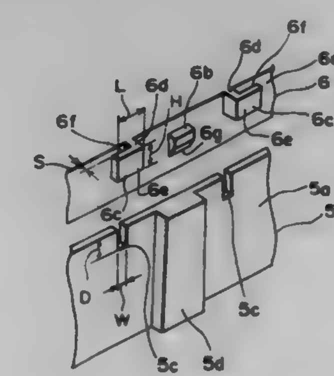

1. A locking construction of an electric connection box having an upper casing and a lower casing, one of the upper and lower casing telescoping into the other, said locking construction comprising:
a locking claw provided on an outer surface of a first side wall of said one of the upper and lower casings;
an engageable portion which is provided on an inner surface of a second side wall of the remaining one of the upper and lower casings, such that the locking claw is brought into engagement with the engageable portion as the first side wall travels in a first axial direction to telescope into the second side wall, and locks the first side wall with respect to the second side wall to prevent the upper and lower cases from being separated from one another in a direction opposite from said first axial direction;
an L-shaped projection provided on the outer surface of the first side wall in the vicinity of the locking claw; said L-shaped projection including a base portion extending from the first side wall and a bent portion extending from the base portion; and
a notch formed in an edge face of the second side wall such that the base portion of the L-shaped projection is inserted into the notch as the the first side wall telescopes into the second side wall;
wherein when the base portion of the projection has been inserted into the notch, the second side wall is gripped between the bent portion of the projection and the first side wall, preventing the outward deflection of the second side wall from the first side wall in a direction other than said first axial direction.

5,702,022
BOTTLE CRATE
Hans Umiker, Egg, Switzerland, assignor to Schoeller-Plast S.A., Romont, France
Filed Apr. 24, 1996, Ser. No. 637,079
Claims priority, application Switzerland, Apr. 26, 1995, 1193/95
Int. Cl.⁶ B65D *1/24;1/36;25/04;85/00*
U.S. Cl. 220—509 **10 Claims**

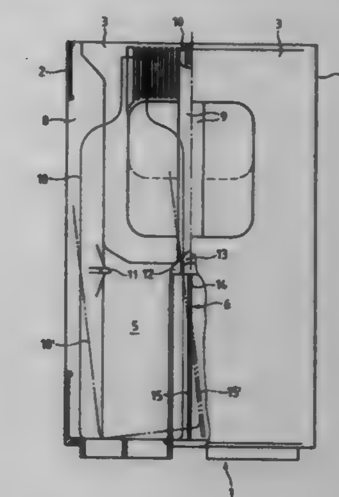

1. A bottle crate, comprising:
a bottom;
two pairs of mutually opposed outer walls including two longitudinal outer walls and two transverse outer walls, which are upstanding and joined to the bottom at an outer perimeter of the bottom, and to respective perimetrically neighboring ones of said outer walls, at respective corners;
a plurality of longitudinal dividing elements and a plurality of transverse dividing elements by which a space bounded by said outer walls and said bottom is divided into a plurality of adjoining positioning compartments in a longitudinal direction and a plurality of adjoining positioning compartments in a transverse direction;
said positioning compartments each having, a plurality of supports located at a level, assuming an upright position of said crate, which is above said bottom by an amount which is further above said bottom than a given distance, which given distance is equal to the height from said bottom of the center of gravity of each of a plurality of like liquid-continuing closed bottles having respective bottoms and a predetermined weight distribution and intended to be at least one of transported and stored in said crate, which act in the transverse direction towards the interior of the respective said positioning compartment and which, at a respective said outer wall limiting the respective said positioning compartment in the transverse direction, project beyond the bottom of the respective said positioning compartment, so that respective supports are arranged to hold fast a respective said bottle when said bottle is standing in the respective said positioning compartment in a position in which the respective said bottle can be tilted about a respective said support when the bottle crate is placed on a respective said outer wall, the bottom of the respective said bottle being displaced, as the crate is tilted from said upright position onto a respective said outer wall, against the respective said outer wall;
said transverse dividing elements having, at least in a respective region of each located close to said bottom of said crate, dividing elements that are movable in said transverse direction, allowing a respective said bottle when standing in a respective said positioning compartment to be tilted about the respective said support thereby displacing the bottom of the respective said bottle and moving the respective said dividing element towards a respectively adjacent said positioning compartment as the bottle crate is placed on the respective said outer wall.

5,702,023
DRYING-AGENT RECEPTACLE FOR AN AIR-CONDITIONING SYSTEM
Eugen Ehs, Landshuter Allee 21, 80637, München, Germany
Filed May 16, 1996, Ser. No. 648,875
Claims priority, application Germany, Jun. 1, 1995, 295 09 896.3
Int. Cl.[6] B65D *6/00*; F17C *13/06*
U.S. Cl. 220—582 11 Claims

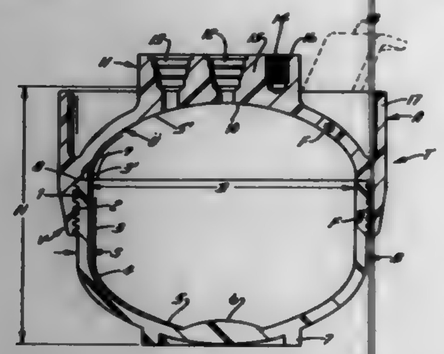

1. A drying-agent receptacle for a vehicular air-conditioning system, comprising: two receptacle components which are interconnected in a circumferentially extending connection area to define a closed interior which is essentially symmetrical with regard to a longitudinal axis of the drying-agent receptacle, the two receptacle components being interconnected in said circumferentially extending connection area by interior connection elements of one the components and external connection elements of the other of the components, an integrated connection device being formed on at least one of the receptacle components, the receptacle components each comprising an injection-molded part formed from a long-fiber reinforced thermoplastic material, wherein, at least in the receptacle component which includes the interior connection elements, a transition from an interior bottom wall of the receptacle component to an internal circumferential wall thereof located adjacent said interior connection elements is formed such that a harmonious shape without any kinks or undercut portions is obtained, wherein

the receptacle components are formed from injection molded polypropylene or polyamide reinforced with glass fibers contained in an amount of approximately 35%-70% by weight and having a length of approximately 10 mm, and wherein

said drying-agent receptacle has sufficient resistance to high temperatures and internal pressures to permit its use as a drying-agent receptacle of a vehicular air-conditioning system.

5,702,024
ICE BLOCKING CUP LID
Frank E. Riso, 2324 Metairie Heights Ave., Metairie, La. 70001-2142
Filed Jan. 11, 1996, Ser. No. 584,699
Int. Cl.[6] A47G *19/22*
U.S. Cl. 220—704 4 Claims

1. A ice blocking cup lid for use in association with a cup including a rim, ice cubes and fluid, the apparatus comprising, in combination:

a first plate and a second plate, each plate being fabricated of plastic and formed in a planar configuration with convex inboard, outboard and rear sides, each member further including a concave front side, an upper surface and a lower surface, each front side including three spaced apertures positioned therealong, the first plate being positioned above the second plate with the inboard end of the first plate overlapping the inboard end of the second plate, the members being positioned whereby at least one aperture of the first plate being positioned in alignment with at least one aperture of the second plate;

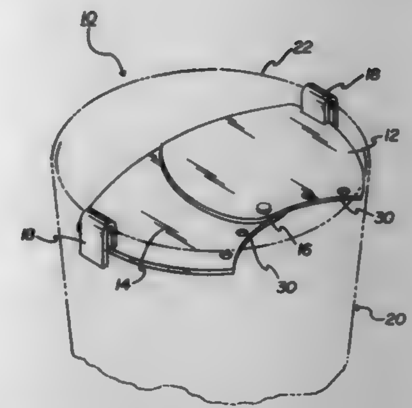

a pin being fabricated of plastic and pivotally and releasably coupled through the aligned apertures to permit pivotal movement of the first and second plates with respect to each other; and

each outboard side edge including an inverted U-shaped clip affixed thereto adjacent to the rear edge, each clip being fabricated of plastic, in an operative orientation the clips of each member being coupled to the rim of a cup, the slidably adjustable configuration of the apparatus permitting coupling to a plurality of differently sized cups, the apparatus serving to block ice cubes when a user drinks from a cup including fluid and ice cubes.

5,702,025
LEAK FREE LID WITH CLOSURE AND SPOUT
Vito Di Gregorio, 119 Arthur Ave., Staten Island, N.Y. 10305
Filed May 6, 1996, Ser. No. 643,815
Int. Cl.[6] B65D *47/28*
U.S. Cl. 220—717 6 Claims

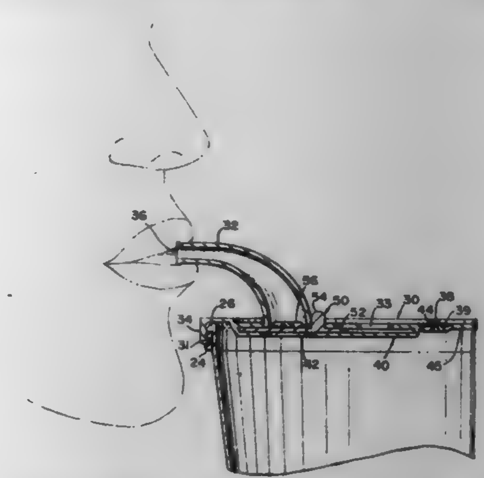

1. A lid for containers, having a peripheral rim and an underside, to be used to cover the opening defined by said rim of a container for liquids, comprising:

A) a spout member mounted on said lid substantially adjacent to said peripheral rim;

B) closure means for selectively blocking the flow of said liquid through said spout member wherein said closure means includes housing means mounted to the underside of said lid and further including a door member slidably mounted to said housing means;

C) means for locking said lid to said container to cause said container and lid engagement to be leak free wherein said means for locking said lid to said container includes a peripheral locking member located substantially adjacent to and below said rim and said peripheral locking member includes a plurality of openings, and said means for locking said lid to said container further including a corresponding plurality of latching means extending radially inwardly from said peripheral rim of said lid for removably and cooperatively engaging to said openings.

5,702,026
CONTAINER WITH SECONDARY CONTAINMENT VENTING BY FORM OF CONSTRUCTION
Thomas R. Lindquist, Denair, Calif., assignor to Convault, Inc., Denair, Calif.
Filed Apr. 16, 1996, Ser. No. 634,307
Int. Cl.[6] B65D *90/02*
U.S. Cl. 220—745 13 Claims

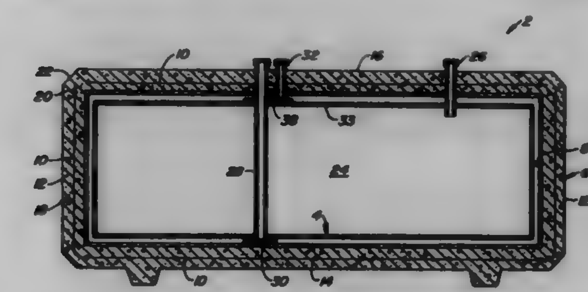

1. In an above-ground storage container of the type having inner and secondary containers, the secondary container comprising top, bottom and side walls, the top of the secondary container having a weakened region to provide venting by construction in the event of an overpressure within a interstice defined between the inner and secondary containers, the improvement comprising:

bands of fluid-accepting and -conducting material fluidly coupling portions of the interstice, adjacent to the bottom and each of the side walls, to an upper portion of the interstice adjacent to the top wall to help equalize pressure throughout the interstice; and

said bands of fluid-accepting and -conducting material comprising at least two continuous bands circumscribing said primary container, oriented transverse to one another and crossing at said upper portion of the interstice.

5,702,027
BAG DISPENSING DEVICE
Michael A. Barry, 1227 E. Ash Ave., Fullerton, Calif. 92631
Filed Jun. 13, 1996, Ser. No. 663,403
Int. Cl.[6] B65G *11/00*
U.S. Cl. 221—84 12 Claims

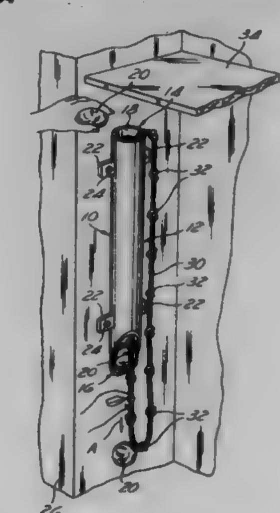

1. A bag dispensing device, comprising:

an elongate, tubular housing defining open top and bottom ends which have a passage extending therebetween for receiving a plurality of bags; and

an elongate, flexible dispensing member comprising a continuous rope which is knotted along its length extending through the passage and from the open top and bottom ends of the housing;

said dispensing member being configured such that when pulled from the bottom end of the housing, one of the bags stored within the passage will be dispensed from the bottom end.

5,702,028
PARTS FEEDER
Tatsumi Shirodera, Toyama-ken, Japan, assignor to YKK Corporation, Tokyo, Japan
Filed Oct. 24, 1996, Ser. No. 736,081
Int. Cl.[6] B23Q *7/12*
U.S. Cl. 221—166 4 Claims

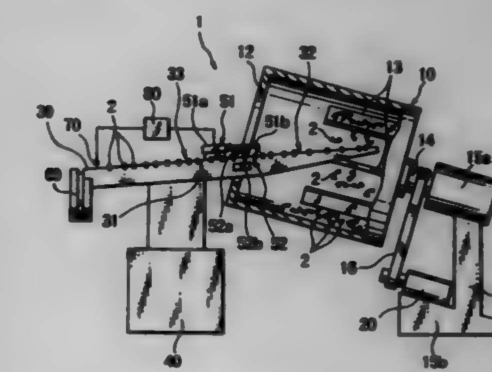

1. A parts feeder for conveying a succession of parts in a common posture, comprising:

(a) a rotary drum rotatable about its substantially horizontal axis of rotation and having on its inner circumferential wall surface a plurality of radial plates circumferentially spaced at predetermined distances;

(b) a feed chute in the form of an elongated plate substantially horizontally extending from an inside to an outside of said rotary drum through an outlet and having a guide portion along its upper edge;

(c) a vibrator supporting said chute for-vibrating the chute longitudinally;

(d) a remover disposed adjacent to said guide portion for removing any of the parts if it is abnormal in posture while being conveyed on said guide portion of said chute; and

(e) said guide portion having a parts-supporting cross-sectional shape gradually varying from an inner end of said chute outwardly toward said outlet of said rotary drum.

5,702,029
DISPOSABLE CUP DISPENSER
Yi-Teh Yang, No. 44, Lane 19, Chi-Lung Rd., Ta-Li City, Taichung Hsien, Taiwan
Filed Apr. 22, 1996, Ser. No. 635,726
Int. Cl.[6] B65H *3/28*
U.S. Cl. 221—221 1 Claim

1. A disposable cup dispenser, which comprises:

a fastening frame provided with a plurality of fastening holes engageable with fastening screws for fastening said fastening frame with a wall;

an upper locating frame fastened with said fastening frame and provided with a locating ring;

a lower locating frame provided in an underside thereof with two retaining slots opposite in location to each other and having respectively a retaining block, said lower locating

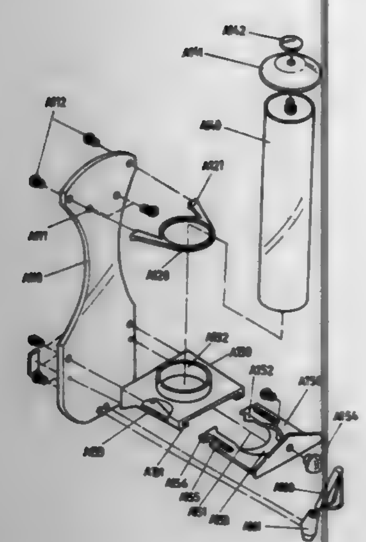

frame further provided in an upper side thereof with a through hole having a locating ring attached thereto such that said locating ring of said through hole of said lower locating frame is corresponding in location to said locating ring of said upper locating frame, said lower locating frame having a flap which is fastened with said fastened frame;
a cup container of a cylindrical construction and held securely by said locating ring of said upper locating frame and said locating ring of said lower locating frame, said cup container having a cap with a retaining body;
a dispensing plate disposed slidably in said retaining slots of said lower locating frame and provided with a cut, two guide blocks, a retaining edge, a pull handle, and two elastic blocks having a projection; and
a support rod provided with a base which is fastened with said fastening frame, said support rod intended for catching a cup which is dispensed upside down.

5,702,030
ROTATIONAL ARM-TYPE CONTACT FEEDING SYSTEM
Mark E. Hulscher, Seattle, Wash., assignor to The Boeing Company, Seattle, Wash.
Filed Jan. 11, 1996, Ser. No. 585,373
Int. Cl.⁶ A24F *15/04*
U.S. Cl. 221—254 **16 Claims**

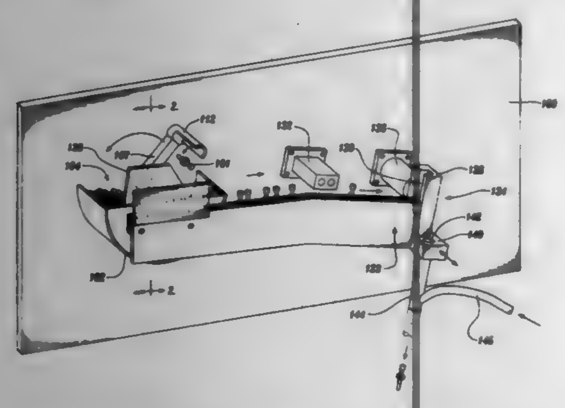

1. A contact blank feeder for supplying blank electrical contacts to a device for crimping the contacts onto ends of electrical leads, the feeder comprising:
(a) a substantially semi-cylindrical bowl for holding electrical contact blanks;
(b) a rotatable arm having one end coupled to a drive motor and another end extending into the bowl so that the another end describes the locus of a circumference of a vertical circle when the arm rotates;
(c) a scoop attached to the another end of the arm, the scoop adapted to capture and remove contact blanks from the contact feed bowl;
(d) a chute located beneath an apogee of travel of the scoop to receive contact blanks falling under gravity from the scoop;
(e) a pair of parallel spaced contact-orienting rails, the rails positioned beneath the chute to receive contact blanks from the chute, the spaced rails supporting the contact blanks therebetween, and the rails oriented at an angle to a horizontal plane to slide contact blanks toward lower ends of the rails; and
(f) a shuttle gate at the lower ends of the rails, the gate blocking further movement of the contact blanks beyond the lower ends of the rails, the gate controlledly slidable transversely across said rails to allow passage of a single contact blank into a drop tube extending downward from near the lower ends of the rails for supplying the contact blank to the device for crimping the contact blanks onto ends of electrical leads.

5,702,031
DISPENSING PUMP WITH PRIMING FEATURE
Emil Meshberg, Farfield; Philip Miller, North Haven, and Robert Schultz, Old Greenwich, all of Conn., assignors to Emson, Inc., Bridgeport, Conn.
Filed Jun. 20, 1995, Ser. No. 493,231
Int. Cl.⁶ G01F *11/00*
U.S. Cl. 222—1 **17 Claims**

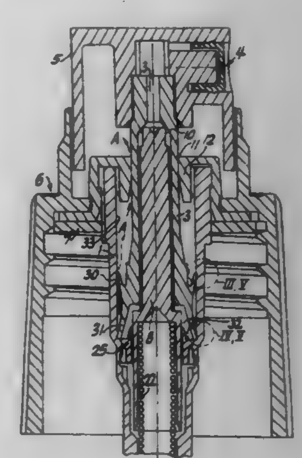

1. A dispensing pump comprising:
a pump cylinder, said pump cylinder comprising an inner wall;
a pump piston reciprocally mounted in said pump cylinder, said pump piston comprising a plurality of seals sealing against said inner wall, said pump piston reciprocating in said pump cylinder from a first, axially outward, position to a second, axially inward, position, said pump cylinder and said pump piston forming a pump chamber; and
a plurality of priming mechanisms on said pump cylinder inner wall, one of said priming mechanisms being located at each location of said seals on said inner wall at said second position of said pump piston, each said priming mechanism creating at least one gap between one of said seals and said inner wall, wherein said pump cylinder contains no openings between said priming mechanisms, whereby air exiting said pump chamber passes through said at least one gap created by each said priming mechanism.
12. A method of venting air from a pump chamber comprising the steps of:
providing a cylinder wherein said cylinder comprises an inner wall;
providing a piston reciprocally mounted in said cylinder wherein said piston comprises at least one seal sealing against said inner wall and wherein said piston reciprocates in said cylinder from a first, axially outward, position to a second, axially inward, position;
providing at least one priming mechanism on said cylinder inner wall, said step of providing at least one priming mechanism comprising the step of forming at least one flat on said inner wall wherein said at least one flat has a surface defining a chord of said inner wall;
engaging said at least one seal with said at least one priming mechanism at said second position of said piston;
creating at least one gap between said at least one seal and said inner wall wherein said at least one gap is sufficiently small so that air passes through said at least one gap but a liquid will not pass through said at least one gap; and
exhausting air through said at least one gap.

5,702,032
BEVERAGE DISPENSING SYSTEM WITH BOTTLE IDENTIFICATION RINGS
John M. Loehrke, Windsor, Wis., assignor to DEC International, Inc., Madison, Wis.
Filed Nov. 27, 1995, Ser. No. 563,161
Int. Cl.⁶ B67D *5/08*
U.S. Cl. 222—63 **14 Claims**

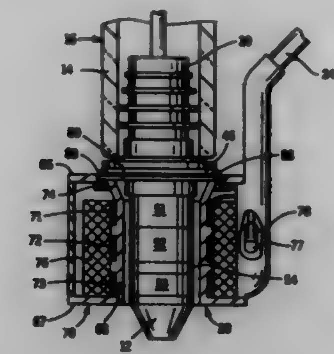

1. A liquid dispensing system comprising:
a spout with an attachment portion to engage a liquid container, a cylindrical portion extending along a first axis from the attachment portion, an external flange where the cylindrical portion extends from the attachment portion, and a flow passage controlled by a magnetically operable valve in the cylindrical portion;
a given plurality of rings attached around and spaced axially along the cylindrical portion of said spout, wherein magnetic properties of the rings define a code which classifies contents of the liquid container;
a supplemental ring of a magnetic material attached to the flange on an exterior of said spout, said supplemental ring further defining the code;
an actuator having an annular shape with a second axis and an aperture within which to detachably receive the cylindrical portion of said spout, said actuator including a given plurality of sensing coils wound around the aperture and spaced along the second axis, and including a valve coil wound around the aperture to produce a magnetic field which opens the magnetically operable valve, said actuator further having a supplemental sensing coil located to detect presence of a supplemental ring when said spout is received in the aperture; and
a controller connected to the given plurality of sensing coils and the supplemental sensing coil to read the code from the spout and energize the valve coil to open the valve.

5,702,033
ADJOINED DUAL-TUBE DISPENSER
Ted L. Beaver, Roselle, Ill., assignor to Continental Plastic Containers, Inc., Norwalk, Conn.
Filed Jun. 7, 1995, Ser. No. 479,942
Int. Cl.⁶ B65D *35/22*
U.S. Cl. 222—94 **67 Claims**

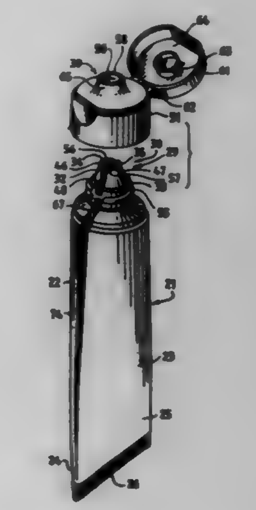

23. A dispenser comprising:
(A) a cap having:
(1) a first section having an opening therethrough;
(2) a second section including closure means for when said second section is in a first position relative to said first section, closing said opening through said first section; and
(3) coupling means, coupled to said first and second sections, for holding said second section in said first position and for permitting movement of said second section relative to first section, said second section leaving said opening open when in said second position;
(B) a dual-tube container having two elongated tubes held in close proximity to each other with their elongated dimensions alongside each other, one end of each of said tubes having an opening, each of said tubes tapering to said opening; and
(C) affixation means, coupled to said tubes and said cap, for holding said first section of said cap to said tubes at a location near said ends of said tubes with said openings in said one ends of said tubes passing substantially through said opening in said first section of said cap when said affixation means holds said first section at said location.

5,702,034
MATERIAL HANDLING APPARATUS HAVING NESTABLE PALLETS
Ivan Semenenko, Moreton-In-Marsh, United Kingdom, assignor to Matcon Limited, Gloucestershire, United Kingdom
Filed Jul. 10, 1995, Ser. No. 500,065
Claims priority, application United Kingdom, Jul. 11, 1994, 9413916; Jul. 11, 1994, 9413917; Jul. 11, 1994, 9413930
Int. Cl.⁶ B67D *5/60*
U.S. Cl. 222—143 **11 Claims**

1. A material handling apparatus comprising:
a pallet including
a body having a surface for supporting a container;
a portion for discharging material from the container;
a portion for stacking and nesting with another similar apparatus; and
a base having channel means capable of receiving one size of forks of fork-lift machines and channel means capable of

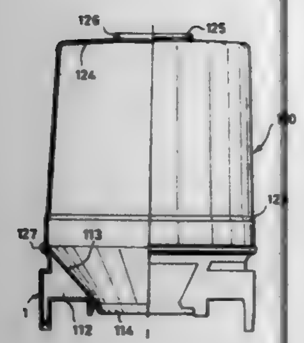

receiving another size of forks of fork-lift machines but incapable of receiving said one size of forks.

5,702,035

SLENDER TUBULAR CONTAINER WITH OPENING AND CLOSING MEANS

Chien-Hua Tsao, 5 Fl., No.569, Ta-Chin St., Taichung, Taiwan

Filed Sep. 5, 1995, Ser. No. 524,386

Int. Cl.[6] B67D *3/00*

U.S. Cl. 222—187 3 Claims

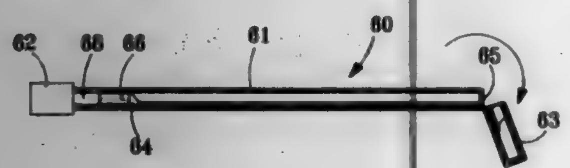

1. A tubular container containing:
a first sealed end and a second applicator end, with a tubular barrel containing liquid disposed therebetween, wherein
at least said applicator end of said barrel includes a non-toxic liquid silicone stopper disposed therein, said silicone stopper is separated from said applicator end by an air gap;
wherein when said sealed end of said container is broken, said liquid flows out of said barrel through said applicator end.

5,702,036

AEROSOL TOTAL RELEASE ACTUATOR HAVING A DELAY IN PRODUCT EMISSION

Daniel A. Ferrara, Jr., Bantam, Conn., assignor to Precision Valve Corporation, Yonkers, N.Y.

Filed Sep. 7, 1995, Ser. No. 524,892

Int. Cl.[6] B65D *83/20*

U.S. Cl. 222—402.13 7 Claims

1. An actuator for the total release of the product within a valved aerosol container, said actuator having a mechanism to delay the discharge of the product through the actuator from the time of the initial opening of the aerosol valve comprising:
(a) means for mounting the actuator to a valved aerosol container, including an upstanding outer wall;
(b) a socket portion having a recess at one end to receive in sealed relation a valve stem of an aerosol valve, the socket portion having an upstanding portion with a conduit therein extending upwardly from the valve stem receiving recess and terminating as an opening through the upstanding portion; said upstanding portion further having a groove in its outer surface commencing at the top of the upstanding portion;
(c) the socket portion having a platform extending radially outward from the upstanding portion, the platform having a downwardly extending wall and forming a hinge connection with the means for mounting the actuator to a valved aerosol container, the downwardly extending wall further having a

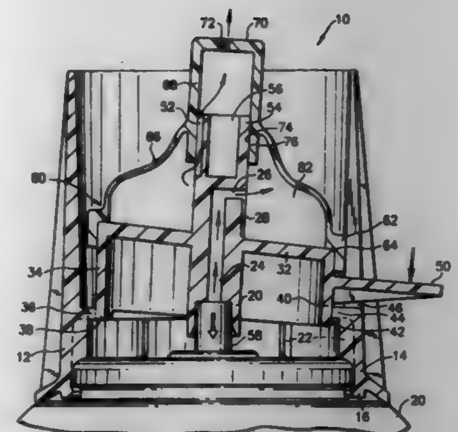

means for actuating and holding in open position the aerosol valve of an associated container;
(d) an inflatable and movable component disposed in an interference and sliding relationship with the outside surface of the socket portion and defining, together with said socket portion, a closed chamber;
(e) the groove and conduit opening in the upstanding wall of the socket being disposed so as to be out of registry with the interior of the closed chamber when the valve of an associated aerosol container is in a closed or non-actuated position.

5,702,037

PLEATING MACHINE AND METHOD

Ronald F. Merkel, 2010 Yorktown Ct. S., League City, Tex. 77573

Filed Jun. 1, 1995, Ser. No. 456,521

Int. Cl.[6] A41H *43/00*

U.S. Cl. 223—30 17 Claims

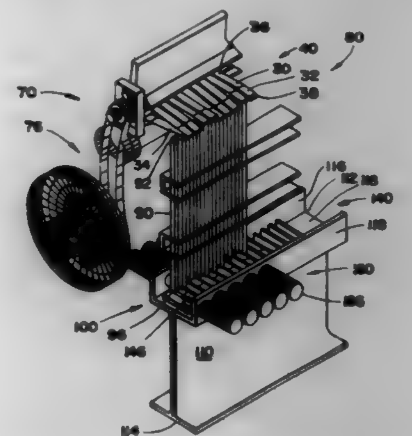

1. An improved push-up pleating machine of the type having:
a material extending between a plurality of pairs of pleating blades;
a material advancement means for advancing said material through said pleating machine;
a corresponding push-up rod for each of said plurality of pairs of pleating blades;
said push-up rod having a rod upper end and a rod lower end;
said rod upper end positioned and constructed to engage said corresponding pair of pleating blades in response to a force applied to said push-up rod and, thereby, creating a reverse pleat;
a pair of heated cylinders;
reciprocating means for pushing said plurality of pairs of pleating blades into proximal pleating relation to said pair of heated cylinders and, thereby, folding said material and pressing the resultant folds into pleats;

wherein the improvement comprises:
a push-up rod control means for selectively engaging and, thereby, applying a force to said push-up rods during a pleating motion and for facilitating creation of lateral variation and longitudinal variation of forward pleats and reverse pleats that are not limited to repeating variation and, thus, a variation of pleated patterns that are not limited to repeating variation;
a cross-member;
cross-member displacement means for repeatedly moving said cross-member from a cross-member resting position to a cross-member engagement position and back to said cross-member resting position;
selective engagement means for selectively engaging said rod lower end of any of said push-up rods when said cross-member is in said cross-member engagement position; and engagement control means for controlling selective engagement of said selective engagement means.

5,702,038

ORGANIZER BAG FOR STROLLERS

Judith A. Miller, and Christopher J. Miller, both of 619 Kitlou Ct., Holland, Ohio 43528

Filed Apr. 10, 1996, Ser. No. 631,740

Int. Cl.[6] B62B *9/26*

U.S. Cl. 224—409 19 Claims

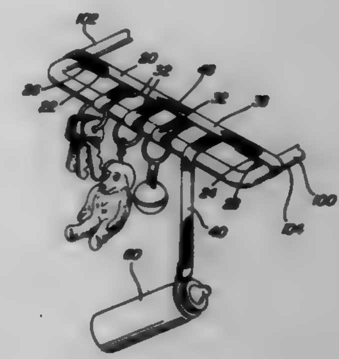

1. A bag for containing articles, the bag having a single elongated strap secured at each of its ends to the bag, with one end of the strap being secured to one side of the bag and the other end of the strap being secured to the other side of the bag, the single elongated strap being sufficiently long so that the bag can be carried on a shoulder, the bag being capable of being secured to the handle of a stroller, the strap having a closure attachment at each end of the strap so that a loop can be formed at each end of the strap for securing the strap to the stroller handle.

5,702,039

STROLLER SUSPENDED UTILITY BELT

James Olaiz, Fountain Valley, Calif., assignor to Junior Products Inc., Santa Ana, Calif.

Filed Dec. 27, 1996, Ser. No. 773,916

Int. Cl.[6] B60R *11/00*

U.S. Cl. 224—409 13 Claims

1. A utility belt for holding objects within reach of an occupant in a stroller comprising:
a traverse strap having first and second ends adapted to be respectively secured to opposite sides of a stroller in front of the occupant;
a plurality of tethers connected at a first end to said traverse strap between said first and second ends of said strap, said

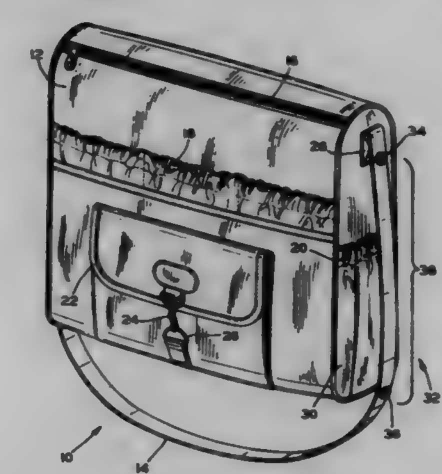

plurality of tethers each including a free end having means for releasably securing said free end to said traverse strap;
a bottle tether having at a free end means for releasably retaining a feeding bottle thereto; and
a region of loop fastener of a hook-and-loop fastener at each of said first and second ends of said traverse strap and a region of hook fastener of a hook-and-loop fastener substantially between said regions of loop fastener for securing said strap to the stroller.

5,702,040

BICYCLE CARRIER

Nils E. Hedeen, 2741 N. Campbell Ave., Chicago, Ill. 60647-1922

Continuation-in-part of Ser. No. 353,093, Dec. 9, 1994, Pat. No. 5,558,261. This application Jul. 16, 1996, Ser. No. 683,099

Int. Cl.[6] B60R *9/10;9/06*

U.S. Cl. 224—511 11 Claims

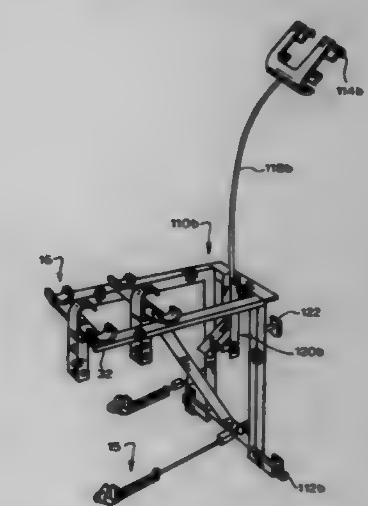

1. A bicycle carrier for attachment to upper and lower rear edges of a vehicle comprising:
a base member exhibiting a locking channel thereon;
first hook means mounted to said base member, and second hook means mounted to said base member and connected to said first hook means by a connecting member for clamping onto an object positioned between said first and second hook means;
locking means disposed and operable within said locking channel of said base member comprising a lockable lever pivotally connected to said connecting member for selectively extending and locking said connecting member, wherein said locking means is inaccessible when locked; and
bicycle supporting means projecting from said base member for supporting a bicycle.

5,702,041
POPOUT STORAGE AND CUPHOLDER ASSEMBLY
Andy Kwan-Leung Sun, North York; Bruce H. B. Chow, Scarborough, and Edoardo Panziera, Maple, all of Canada, assignors to Manchester Plastics, Inc., Troy, Mich.
Filed Mar. 18, 1996, Ser. No. 617,054
Int. Cl.⁶ B60R *7/04*
U.S. Cl. 224—539 **19 Claims**

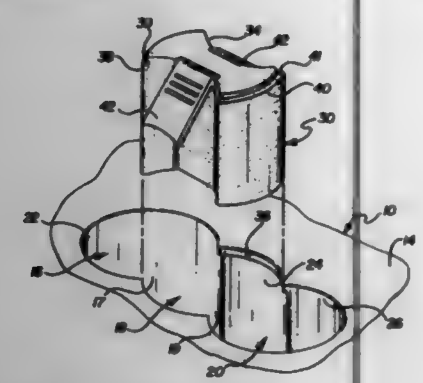

1. A cup holder assembly comprising:
a support housing,
said support including at least two interconnecting cavities, a first of said cavities providing a first receptacle for a container;
an insert rod tuber removably received within a second of said cavities and which fills at least a portion of said second cavity, and, including a first side providing a portion of said first receptacle for the container when positioned in said second cavity;
said support housing including a locking member interconnectable with said insert member having a latch position fixedly securing said insert member into said second cavity and an unlatch position allowing removal of said insert member, said insert member being rotatable within said second cavity between said latch position with said first side forming a portion of said receptacle and said unlatch position; and
said locking member including a lip on said support housing overhanging said second cavity and a portion of said insert member when in said latch position.

5,702,042
HARNESS CARRIER
Ivan P. Peacock, Essex, England, assignor to Renegade Action Sports, Inc., Indiana, Pa.
Filed Oct. 17, 1995, Ser. No. 545,426
Int. Cl.⁶ A45F *3/00*
U.S. Cl. 224—662 **5 Claims**

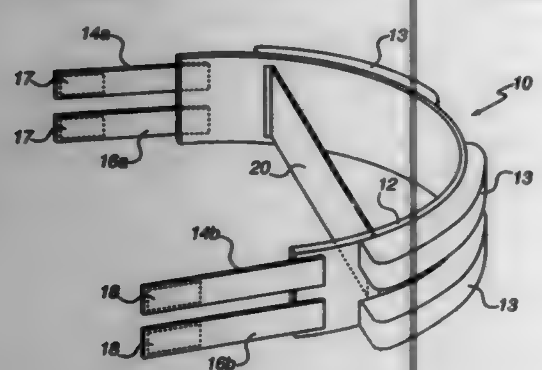

1. A harness carrier for carrying items on a back of a wearer, said carrier comprising:
a. a back support member having a substantially arcuate configuration when in a substantially relaxed state, said support member including terminating, opposing ends and being configurable to the shape of the back of a wearer;
b) at least one carrier means mounted to said back support member for carrying game accessories;
c) at least a pair of straps, each of said straps being respectively attached to said support member at said terminating ends of said support member and being adapted to attach to each other for supporting said carrier means from the waist of a user when in use; and
d) an elastomeric member resistive to deformation having opposite ends attached to said support member in a chordal relationship therewith such that said elastomeric member is interposed between said back support member and the back of a wearer when in use, said opposite ends of said elastomeric member spaced from said terminating ends such that said elastomeric member spans between about fifty to ninety percent of said back support member, wherein said elastomeric member suspends said back support member from the back of a wearer when normal loads are carded by said carrier means and expands against said back support member when heavy loads are carded by said carrier means.

5,702,043
AUXILIARY TRANSPORT DEVICE
Gerardus M. C. J. Logtens, Holthees, and Franciscus G. M. Scheepens, Gemert, both of Netherlands, assignors to Stork Contiweb B.V., Netherlands
Filed Jul. 5, 1996, Ser. No. 676,040
Claims priority, application Netherlands, Jul. 6, 1995, 1000740
Int. Cl.⁶ G03B *1/56*
U.S. Cl. 226—92 **16 Claims**

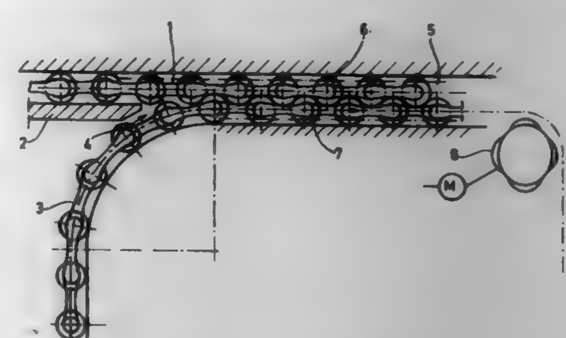

1. Auxiliary transport device for transporting a chain part of a web conveying mechanism, which mechanism guides a starting end of a web of material along a transit path that has a start and an end through a device for processing the web of material, wherein the auxiliary transport device comprises transport means, having a length of at least the transit path of the web of material, for engaging and moving the chain part of the web conveying mechanism, as well as drive means for moving the transport means and guide means, which are arranged along the transit path of the web of material, for guiding the transport means and the chain part through the device.

5,702,044
STOP PIECE
Norbert Ernst Christmann, Breidenbach, and Gerhard Fries, Biedenkopf, both of Germany, assignors to Tetra Laval Convenience Food GmbH & Co. KG, Biedenkopf-Wallau, Germany
Filed Jul. 12, 1996, Ser. No. 679,535
Claims priority, application Germany, Jul. 13, 1995, 195 25 523.2
Int. Cl.⁶ B65H *20/00;* B65G *47/84;* F16D *1/00*
U.S. Cl. 226—173 **18 Claims**

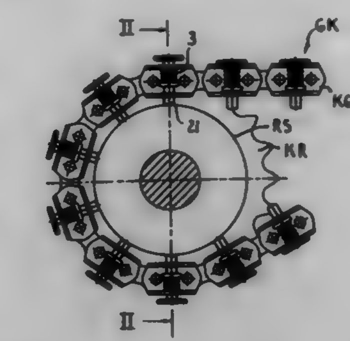

1. A tensioning piece in a food packaging transporting device, comprising at least two spaced apart plates extending from a conveyor chain, each of said plates having a bore therethrough coaxially aligned with each other, a guide spindle coaxially received in said bores, an annular holding groove being provided in a periphery of said guide spindle intermediate said plates, a stop piece received in said groove, and a compression spring encircling said guide spindle and providing a spring force for clamping and subsequent transporting of a packaging material, one of said plates and said stop piece forming abutments for said spring, said stop piece comprising,
(a) a flat, base plate having an outer edge and an annularly cylindrical collar extending coextensively with said spring and being oriented adjacent said outer edge of said base plate and enclosing at least a portion of one end of said spring; and
(b) said base plate having an inner edge resting in said annular holding groove, a feed slot extending through said base plate from said outer edge to said inner edge of said base plate, a width of said feed slot being conformed to a diameter of said annular holding groove and said feed slot being dimensioned such that said stop piece is freely movably without becoming jammed in said annular holding groove.

5,702,045
ROLL FOR THE PRESSURE TREATMENT OF CLOTH WEBS
Wolfgang Tschirner, 47918 Tonisvorst, Germany
Filed Jul. 24, 1995, Ser. No. 505,873
Claims priority, application Germany, Nov. 8, 1994, 44 28 420.9
Int. Cl.⁶ B21B *31/00;* B65H *75/24;* F16C *13/00*
U.S. Cl. 226—191 **26 Claims**

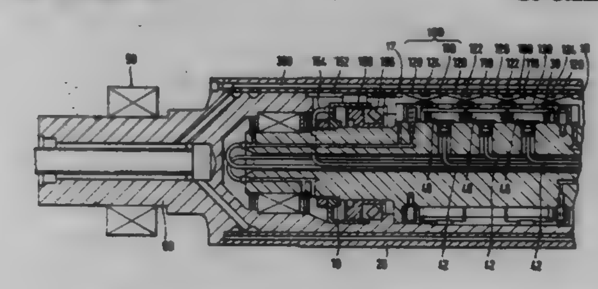

1. A roll for the pressure treatment of cloth webs comprising:
support means for supporting a shell;
clamping means for rotatably securing said shell on said support means wherein said clamping means has a plurality of adjacent conically shaped rings which are rotatably mounted around said support means and at least one clamping ring interposed between said conically shaped rings and an inner surface of said shell;
a force applying assembly for providing a compressive force parallel to a longitudinal axis of said support means and against at least said at least one clamping ring to urge said at least one said clamping ring into contact with said inner surface of said shell; and
biasing means for providing a radial force along portions of said shell.

5,702,046
STAPLE GUN HAVING A ROTATING LOWER HOUSING
Stephen R. Rokita, Sussex, and John J. Davis, Little Falls, both of N.J., assignors to Rokey Corporation, Sussex, N.J.
Filed Jun. 1, 1995, Ser. No. 457,425
Int. Cl.⁶ B25C *5/02*
U.S. Cl. 227—110 **6 Claims**

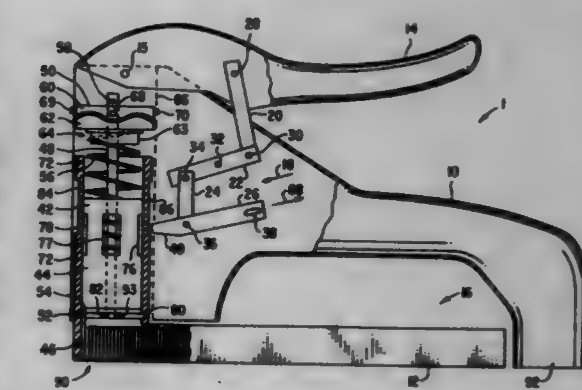

6. A staple gun for implanting a staple in an object, comprising:
a driver mechanism that moves along an axis to implant the staple in the object;
a top housing that extends away from the axis a first distance; and
a lower housing connected to the top housing so that the lower housing can be rotated about the axis that the driver mechanism moves along, the lower housing extending away from the axis a second distance which is shorter than the first distance, the lower housing also having a bottom; and
the top housing further having a base section having a bottom, the base section extending down substantially parallel to the axis, the bottom of the base section being in planar alignment with the bottom of the lower housing.

5,702,047
ELECTRIC STAPLER
Toru Yoshie, Tokyo, Japan, assignor to Max Co., Ltd., Tokyo, Japan
Filed Feb. 27, 1996, Ser. No. 607,367
Claims priority, application Japan, Feb. 28, 1995, 7-064985
Int. Cl.⁶ B65H *37/04*
U.S. Cl. 227—131 **12 Claims**

1. An electric stapler comprising:
a driving plate for driving out a staple from a driving position while reciprocating;
delivering means for delivering an array of staples to the driving position interrelatedly with a reciprocating motion of said driving plate; and
detecting means for detecting that a staple occupying a front row of the array of the staples has reached the driving position;

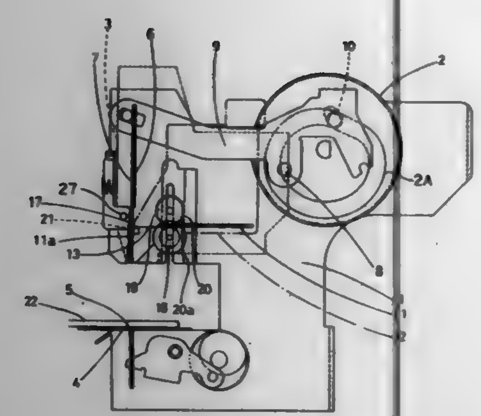

wherein said driving plate returns to an initial position in accordance with a detection signal output by said detecting means.

5,702,048
DEVICE FOR MICROANATOMOSIS OF BLOOD VESSELS
René Eberlin, 25, Avenue Jeandin, CH-1226 Thonex, Switzerland
PCT No. PCT/FR94/00302, § 371 Date Feb. 3, 1995, § 102(e) Date Feb. 3, 1995, PCT Pub. No. WO94/21181, PCT Pub. Date Sep. 29, 1994
PCT Filed Mar. 18, 1994, Ser. No. 343,424
Claims priority, application France, Mar. 18, 1993, 93 03337
Int. Cl.^{6} A61B *17/068*
U.S. Cl. 227—177.1 **11 Claims**

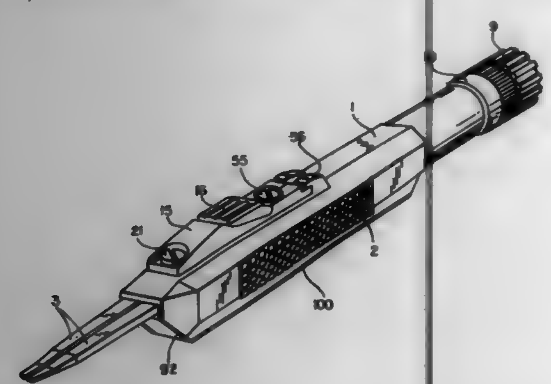

1. A device for microanastomosis of blood vessels comprising:
a housing including a sleeve (1) having two oppositely disposed open ends;
a drive plate (13) slidable within said sleeve (1) and supporting an axle (50);
a pair of retractable, movable arms (3) supported and articulated on said axle (50) and each said arm having one end extending outside of said sleeve (1) through one of said two oppositely disposed open ends;
a rod (14) operatively coupled with said plate (13), and a gripper coupled with one end of said rod (14), each of said movable arms (3) having, at a front end thereof, a socket (42) for grasping and holding a staple (4) between said movable arms in each said socket, one end of said rod being positioned at a rear portion of said housing opposite to said one of said oppositely disposed ends for movement of said plate (13), and extending outside of said sleeve (1) through the other of said oppositely disposed open ends opposite to said one open end and axially aligned therewith;
a removable magazine (32) receivable within said sleeve (1) and supported on said plate (13) for storing staples prior to their being grasped by said sockets (42);
means for effecting a grasping of said staple (4) including means for moving said rod (14) in a first direction out of said sleeve (1) through said other of said oppositely disposed open ends, and moving each said socket (42) to a position facing the staple (4) in said removable magazine (32) and movement of said rod (14) includes means for displacement of each of said arms (3) for movement of said arms (3) apart from each other to move each said socket (42) into position to face the staple (4);
said means for moving said rod (14) including means for displacement of said rod (14) in a second direction opposite to said first direction for movement of said rod (14) into said sleeve (1) towards said one open end to move each said socket (42) by movement of the arms (3) into a work position for crimping said staple (4) onto a blood vessel;
means including a finger operated lever (16) external of said sleeve (1) for moving said arms towards each other for effecting a preset movement of said arms (3) together by moving said arms towards each other to effect a crimping of the staple responsive to ends of the arms (3) being moved together towards each other;
a displaceable sliding member (17) internal of said sleeve (1) acting on an inner articulated lever (18), an inner cam member (47) supported on said displaceable sliding member (17), said inner articulated lever (18) being rotatable and operatively associated with said displaceable sliding member (17) for the displacement of said sliding member (17), said inner cam member (47) having a pair of outer cam faces (46), a pair of outer cam members (147) each having an inner cam face (48) cooperating with one of said outer cam faces (46) each said arm (3) having pivots (45) integral therewith and fixed in position between one of said outer cam faces (46) provided on said inner cam member (47), and one of said inner cam faces (48) and one of said outer cam members (147) having shaped lateral faces (48) thereon; said inner cam member (47) having inclined planes (47*a*) for producing a relative movement (49) relative to each said pivot (45) of each said arm (3) for causing said pivots (45) to move apart initially during an initial phase of displacement and each said front end of each of said arms (3) being provided with said socket (42) to move together for crimping of the staple, and after the staple has been crimped, said arms (3) move apart for release of the staple (4) from each said socket (42) and allow each said socket (42) to be withdrawn and to accept a new staple.

5,702,049
ANGLED WIRE BONDING TOOL AND ALIGNMENT METHOD
Kenneth L. Biggs, Orange, and John Cairl Price, Rancho Mirage, both of Calif., assignors to West Bond Inc., Anaheim, Calif.
Filed Jun. 7, 1995, Ser. No. 474,242
Int. Cl.^{6} H01L *21/607*
U.S. Cl. 228—105 **8 Claims**

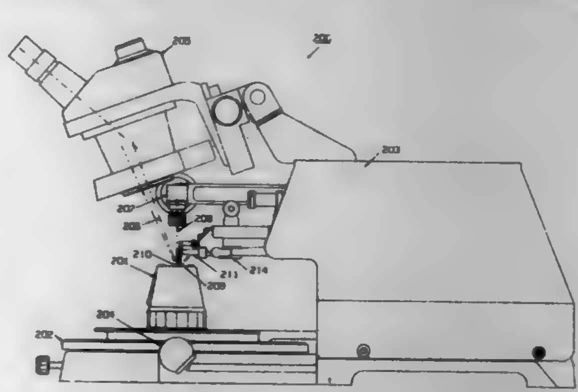

1. An improvement in ultrasonic wire bonding machines of the type having a support structure, a workpiece holder platform having a generally flat upper surface adapted to hold a workpiece thereon, said workpiece having metallic bonding sites substantially parallel to said platform surface, an ultrasonic force generator mechanically coupled to an ultrasonic wire bonding tool having a working tip adapted to move perpendicularly downwards into contact with a bonding site and transmits transversely directed ultrasonic bond-forming energy waves, and means for moving said workpiece relative to said bonding tool tip so as to bring different desired bonding sites into alignment with the normally directed line of action of said tool tip relative to said workpiece, said improvement comprising an ultrasonic wire bonding tool having an elongated straight body, a tip section having a lower working face oriented parallel to said platform and adapted to transmit transverse ultrasonic wave energy to said bonding sites on said workpiece, said body having an upper end mechanically coupled to said ultrasonic force generator, said body being angled obliquely from said working face to said ultrasonic force generator, whereby said contact point of said tip with said bonding site may be viewed normally along said line of action of said tool tip, thereby permitting direct and continuous visual alignment of said tool tip with said bond site, said bonding tool being a capillary ball bonding type having a longitudinally disposed bore running through said tool, said bore having in the upper end of the body thereof an upper entrance opening for receiving bonding wire, and having in the lower working surface of the tip section thereof a wire exit opening.

5,702,050
METHOD OF BRAZING A HONEYCOMB
Kiyoo Oono, Aichi-ken, Japan, assignor to Mitsubishi Jukogyo Kabushiki Kaisha, Tokyo, Japan
Filed Apr. 18, 1996, Ser. No. 634,697
Claims priority, application Japan, Apr. 28, 1995, 7-105602
Int. Cl.^{6} B23P *15/04;* **B23K** *37/04*
U.S. Cl. 228—212 **2 Claims**

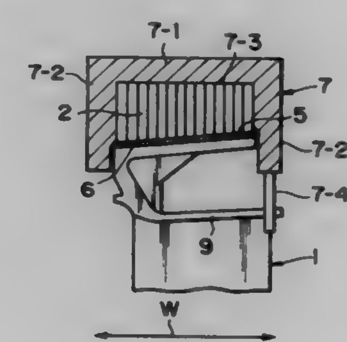

1. A method of brazing a honeycomb for air sealing onto a braze surface of the front end of the blade of a rotating machine, comprising the steps:
placing a filler sheet between the honeycomb and the braze surface;
constraining the honeycomb in the seal width direction so that the seal width direction of the honeycomb corresponds to the seal width direction of the braze surface while keeping the figure of the honeycomb at the same curvature with that of the braze surface;
vertically biasing the honeycomb against the braze surface by applying a uniform pressure along the seal width direction of the braze surface and the honeycomb using a jig;
heating the assembly to braze the honeycomb and the braze surface; and
allowing the honeycomb to freely vertically heat expand by displacing a jig vertically while said jig continues to bias said honeycomb against the braze surface.

5,702,051
DEVICE FOR MOVING AN OBJECT BY MEANS OF THERMAL CHANGE IN SHAPE OR VOLUME
Helmut Walter Leicht, Messerschmittring 61, D-86343 Königbrunn bei Augsburg, Germany
PCT No. PCT/EP94/03645, § 371 Date May 30, 1996, § 102(e) Date May 30, 1996, PCT Pub. No. WO95/13161, PCT Pub. Date May 18, 1995
PCT Filed Nov. 7, 1994, Ser. No. 640,758
Claims priority, application Germany, Nov. 8, 1993, 43 38 094.8
Int. Cl.^{6} B23K *1/015;1/018;3/00*
U.S. Cl. 228—234.2 **12 Claims**

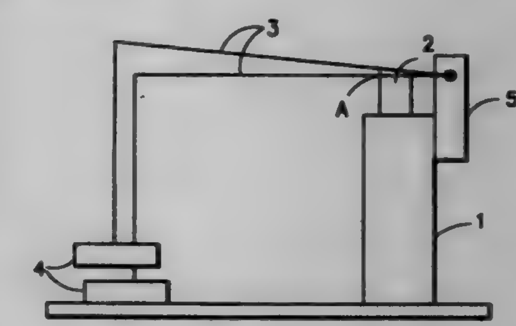

1. A device for moving an electronic component on a circuit board by a process temperature during unsoldering or soldering in the vapor-phase by means of thermal change in shape or volume when a predetermined process temperature at or above the melting point of the solder has been reached, comprising a closed container (1) filled with a fluid or a solid body, a free end (2) of the container or solid body is connected with the electronic component, wherein the volume of the fluid or solid body is increased under the influence of the predetermined process temperature, so that the free end (2) of the container (1) or solid body is pushed from a starting position (A) and the electronic component is moved relative to the printed circuit board.

5,702,052
BIN OF LAMINATED MATERIAL
Craig Ronald Bonner, Auckland, New Zealand, assignor to Carter Holt Harvey Limited, Manukau City, New Zealand
Filed Oct. 6, 1995, Ser. No. 539,903
Claims priority, application New Zealand, Oct. 6, 1994, 264630
Int. Cl.^{6} B65D *3/22*
U.S. Cl. 229—4.5 **38 Claims**

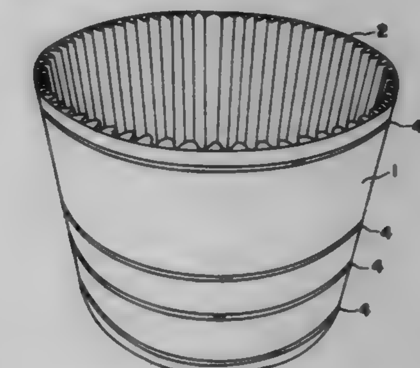

1. A bin of substantially circular form when viewed in plan, said bin comprising:
an assembly of at least one single-face corrugated structure having flutes running vertically and exposed to an inside of the bin when in an erected form,

said at least one single-face corrugated structure including a liner board of at least one ply of kraft paper adhesively laminated to a corrugated laminate of at least two plies, with at least one of said at least two plies including a ply of kraft paper, said corrugated laminate being set in the corrugated form by moisture, heat and pressure,
said flutes of the at least one single-face corrugated structure being at least grater than "A" flute size, and
a support surface for supporting said at least one single-face corrugated structure.

5,702,053
COMPOSITE INSULATOR-PACKING CONTAINER AND A METHOD FOR PACKING A COMPOSITE INSULATOR
Motokazu Kozakai, Kasugai City; Kunitoshi Aoyama, and Masahiko Sahasi, both of Komaki City, all of Japan, assignors to NGK Insulators, Ltd., Japan
Filed Jun. 7, 1995, Ser. No. 487,689
Claims priority, application Japan, Sep. 19, 1994, 6-223086
Int. Cl.⁶ B65D *85/02*
U.S. Cl. 229—87.02 **7 Claims**

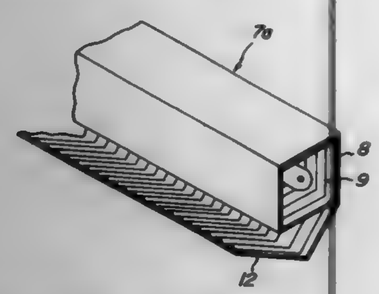

1. A packing container, comprising:
a single-faced corrugated fiberboard composed of a linerboard and a corrugating medium joined to one surface of said linerboard, said fiberboard being impregnated and reinforced with a resin and being folded into a shape of a polygonal prism along ruled lines orthogonal to flutes of said corrugating medium such that said linerboard is located at an outer periphery of said packing container, said flutes of said corrugating medium extending in a direction perpendicular to a longitudinal axis of said packing container.

5,702,054
SINGLE PIECE FOOD PACKAGE
Nicholas A. Philips, West Chicago, and Walter D. Keefe, Jr., Carol Stream, both of Ill., assignors to Weyerhaeuser Company, Tacoma, Wash.
Filed May 23, 1996, Ser. No. 652,890
Int. Cl.⁶ B65D *5/24*
U.S. Cl. 229—110 **1 Claim**

1. A single piece paperboard container for holding relatively flat

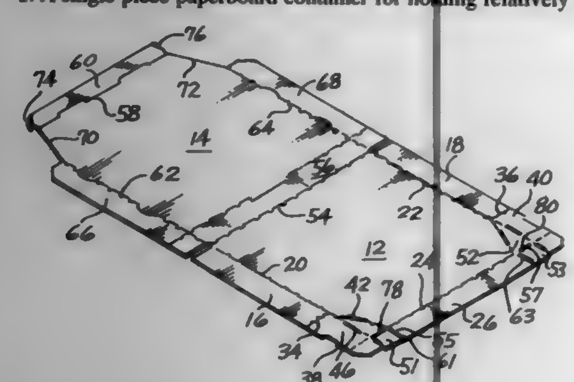

circular food products has top and bottom walls with at least four side walls connected to respective edges of the top and bottom walls through hinge lines, having the improvement comprising:
a pair of angled corner structures on each corner of a front one of said side walls, each angled corner structure comprising:
a front corner wall connected to a side wall and extending at an acute angle inwardly toward the front one of said side walls,
a triangular shaped panel hingedly connected to the bottom of the adjacent front corner wall and extending outwardly therefrom,
a corner tab hingedly connected to an end of the triangular shaped panel and to the end of the front one of said side walls,
a locking flap having opposed ends and extending outwardly from the front edge of the top wall, and
a slit at the end of the front side wall adapted to receive a hook extending outwardly from the adjacent end of the locking flap.

5,702,055
VEHICLE HEATER WITH FUEL PUMP COOLING
Michael Humburg, Göppingen, Germany, assignor to J. Eberspächer GmbH & Co., Esslingen, Germany
PCT No. PCT/EP94/04308, § 371 Date May 29, 1996, § 102(e) Date May 29, 1996, PCT Pub. No. WO95/18341, PCT Pub. Date Jul. 6, 1995
PCT Filed Dec. 27, 1994, Ser. No. 656,272
Claims priority, application Germany, Dec. 31, 1993, 43 45 057.1
Int. Cl.⁶ G05D *23/00*
U.S. Cl. 237—214 **19 Claims**

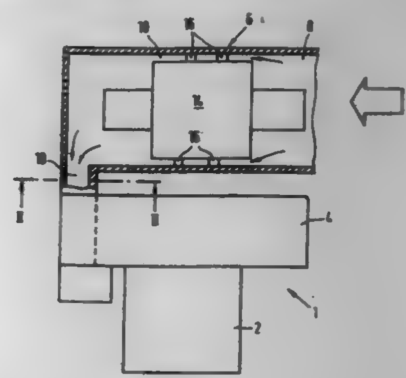

1. A vehicle heater comprising:
a burner;
a combustion air blower for feeding combustion air to said burner;
an intake channel housing, provided separate from said burner on an upstream side of said combustion air blower, said intake channel housing for guiding the combustion air into a flow leading to said combustion air blower;
a fuel feed pump for feeding fuel to said burner, said fuel feed pump being mounted in said intake channel housing and in said flow of the combustion air for heat transfer between said fuel pump and said flow of combustion air.

5,702,056
SPRINKLER
Ho-M Yang, No. 46, Lane 73, Sec. 2, Chang Nan Road, Chang Hua City, Taiwan
Filed Jul. 11, 1996, Ser. No. 678,645
Int. Cl.⁶ B05B *3/00;15/10;1/28*
U.S. Cl. 239—206 **1 Claim**

1. A sprinkler comprises:
a hollow box, a first casing and a second casing covering said hollow box, a telescopic pipe disposed in said hollow box longitudinally, and a sprinkling disk disposed on said telescopic pipe,

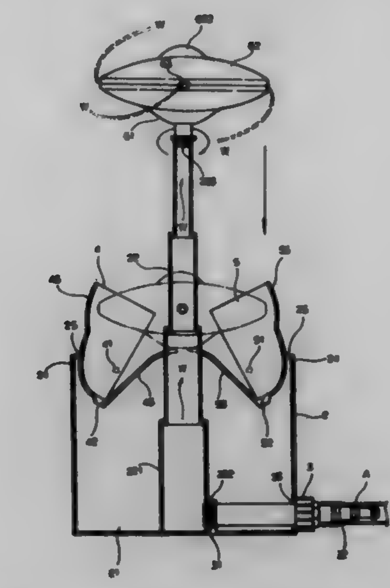

said telescopic pipe having at least an outer pipe, a middle pipe in said outer pipe, and an inner pipe in said middle pipe,
a circular hole formed on a lower periphery of said hollow box,
a generally round opening formed on a top portion of said hollow box,
four hollow tubes disposed on a top periphery of said hollow box,
a threaded hole formed on a lower periphery of said outer pipe,
a joint having a threaded end passing through said circular hole to be inserted in said threaded hole and a distal end to connect a water pipe,
said first casing having two rods, a weighted plate, a protrusion and a first curved top,
a lobe extending downward from an outer rim of said first casing,
said second casing having two bars, a weighted block, a protuberance and a second curved top,
a lug extending downward from an outer rim of said second casing,
said sprinkling disk having a lower disk and an upper disk,
a hollow connection disposed on said lower disk,
a plurality of conduits communicating with said hollow connection,
a plurality of recesses formed on a rim of said lower disk,
a plurality of grooves formed on a rim of said upper disk to match said corresponding recesses to form a plurality of through holes to receive said corresponding conduits,
a bolt fastening said lower disk on an upper end of said inner pipe,
said rods and said bars inserted in said corresponding hollow tubes, and
wherein a water enters said water pipe, said joint and said telescopic pipe to push said telescopic pipe to extend upward.

5,702,057
SHOWER HEAD, PARTICULARLY FOR A HAND SHOWER
Roland Huber, Hendschiken, Switzerland, assignor to Hansa Metallwerke AG, Stuttgart, Germany
Filed Dec. 19, 1995, Ser. No. 576,432
Claims priority, application Germany, Dec. 29, 1994, 44 47 115.1
Int. Cl.⁶ B05B *1/00*
U.S. Cl. 239—288.3 **5 Claims**

1. A shower head, comprising:
a) an essentially bell-shaped housing in which at least one water chamber is formed which can be linked with a water supply channel;

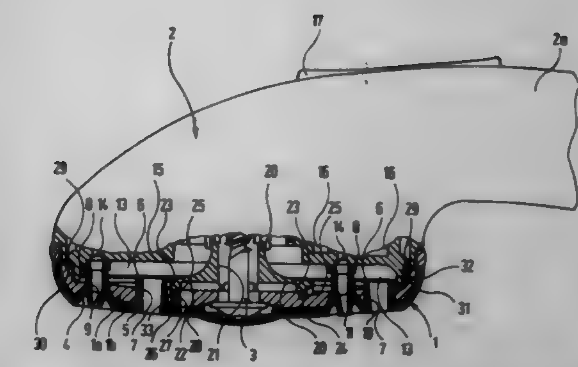

b) a shower base, which seals a bottom of the bell-shaped housing and consists of
(ba) a perforated plate made of a rigid material which has a number of holes,
(bc) a number of hose-type jet inserts which are made of a relatively soft, flexible material, each of which have a jet channel terminating in a water outlet opening passing through them and each of which passes through a hole in the perforated plate; and
(c) at least one seal which seals the shower base against the housing, and at least one jet insert set in the housing,
wherein the at least one seal is manufactured jointly with the at least one jet insert and is made of the same material,
wherein the at least one seal is joined to a corresponding jet insert to form a single component, and
wherein the at least one seal is connected to the corresponding jet insert by at least one lug which extends along an inner surface of the perforated plate.

5,702,058
DUAL FOAMER NOZZLE ASSEMBLY FOR TRIGGER SPRAYER
Douglas B. Dobbs, Yorba Linda, Calif., and Lisa Wambaugh, Lee's Summit, Mo., assignors to Calmar Inc., City of Industry, Calif.
Continuation-in-part of Ser. No. 392,397, Feb. 22, 1995, Pat. No. 5,647,539, which is a continuation-in-part of Ser. No. 352,805, Dec. 1, 1994, abandoned. This application May 20, 1996, Ser. No. 650,692
Int. Cl.⁶ B05B *9/043*
U.S. Cl. 239—343 **2 Claims**

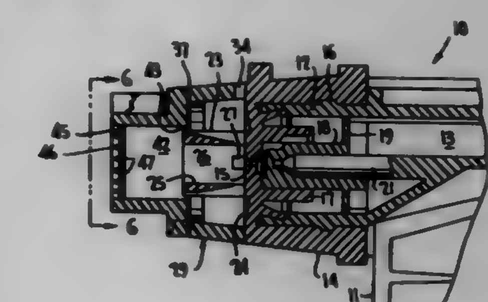

1. A foamer nozzle assembly mounted at a discharge end of a trigger sprayer, comprising, a nozzle cap having a foaming barrel with a smooth inner wall of a given diameter defining a turbulence chamber coaxial with a discharge orifice located in an end wall of the cap at said discharge end through which a conical spray is discharged in a downstream direction into said chamber for generating foam as spray particles impact against said smooth inner wall to mix with air in said chamber to form foam bubbles of a given size and density, supplemental foam generating means of molded plastic construction mounted to said nozzle cap and having air inlet

openings in communication with air aspiration openings in said barrel, said means including a hinged grid pivotable about a hinge axis between an operative position coaxial with said barrel and an inoperative position hinged away from said barrel, said grid comprising first and second sets of ribs respectively lying in first and second parallel planes, said ribs of said first set being contiguous to said ribs of said second set, said ribs being mutually spaced apart in each said set to define uniformly sized openings therebetween, said ribs of both said sets having flat surfaces facing upstream and lying perpendicular to a central axis of said barrel in said operative position for generating a finer and more dense foam as the foam bubbles impact against said flat surfaces to further mix with air in said supplemental foam generating means, said hinged grid including a cylinder supporting said ribs in said operative position at a spaced axial distance from a downstream end of said barrel, said cylinder being sized relative to said barrel to define an annular gap therewith in communication with said air inlet openings for aspirating said foam collecting chamber in said operative position.

5,702,059

EXTENDED WORKING RANGE DATAFORM READER INCLUDING FUZZY LOGIC IMAGE CONTROL CIRCUITRY

John B. Chu; Paul P. Ju, and Ynjiun P. Wang, all of Fort Myers, Fla., assignors to Meta Holding Corp., Fort Myers, Fla.

Continuation-in-part of Ser. No. 507,607, Jul. 25, 1995, Ser. No. 494,435, Jun. 26, 1995, Ser. No. 332,592, Oct. 31, 1994, and Ser. No. 280,489, Jul. 16, 1994, Pat. No. 5,572,006. This application Oct. 18, 1995, Ser. No. 544,618

Int. Cl.[6] G06K *07/30*

U.S. Cl. 235—462 **20 Claims**

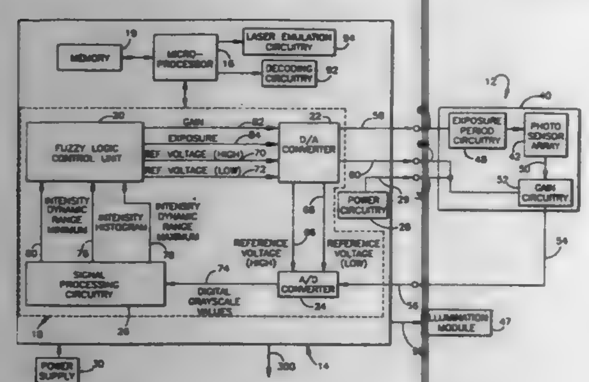

1. A dataform reader comprising:

a) a board camera including a two dimensional photosensor array comprising a set of pixels and control circuitry for generating a video signal representative of an illumination content on each pixel in the set of pixels over an exposure period;

b) the board camera control circuitry including a gain control signal input and an exposure period control signal input;

c) an analog to digital converter coupled to the board camera, the analog to digital converter receiving the video signal and generating gray scale values; and

d) a control unit coupled to the board camera and the analog to digital converter to receive the gray scale values and analyze a portion of the gray scale values, generate at the least one of a gain control signal input to the board camera control circuitry gain control signal input and an exposure period control signal input to the board camera control circuitry exposure period control signal input.

5,702,060

HIGH-ENERGY HIGH-CAPACITY OSCILLATING BALL MILL

Paolo Matteazzi, Via Pinelli 23/B, 31100 Treviso, and Diego Basset, Via Roma 6, 31020 San Vendemiano, both of Italy

PCT No. PCT/EP93/03000, § 371 Date Apr. 25, 1995, § 102(e) Date Apr. 25, 1995, PCT Pub. No. WO94/09907, PCT Pub. Date May 11, 1994

PCT Filed Oct. 28, 1993, Ser. No. 424,373

Claims priority, application Italy, Oct. 30, 1992, TV92A0126

Int. Cl.[6] B02C *19/16*

U.S. Cl. 241—175 **18 Claims**

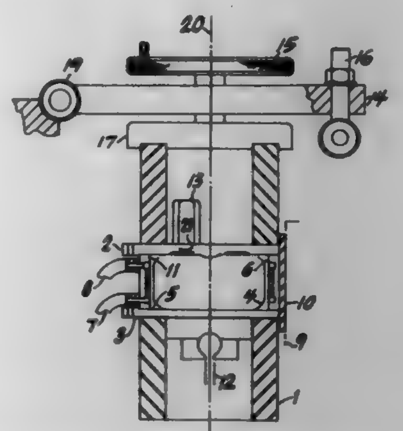

1. An oscillating ball mill comprising a driving system, a grinding jar, a bearing system, and an elastic system, wherein said driving system and said elastic system are in direct contact with said grinding jar, said elastic system compensates the inertial forces resulting from the operation of said driving system, and the grinding jar motion is substantially along an axis.

5,702,061

FOOD GRATER

Timothy J. Kennedy; Davin Stowell, both of New York, and Scott Bolden, Brooklyn, all of N.Y., assignors to General Housewares Corp., Terre Haute, Ind.

Filed Mar. 20, 1996, Ser. No. 618,776

Int. Cl.[6] A47J *43/25*

U.S. Cl. 241—93 **21 Claims**

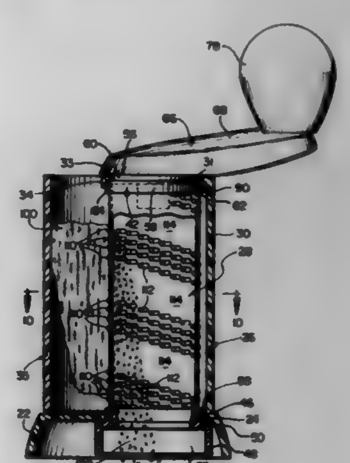

1. A food grater comprising:

a housing sidewall;

a grater blade disposed adjacent to the housing sidewall;

a moveable door having an extension, the moveable door being connected to the housing sidewall for movement between open and closed positions, in each of which positions at least

a portion of the extension is disposed between the housing sidewall and the grater blade with a greater portion of the extension being disposed between the housing sidewall and the grater blade when the door is in the closed position than when the door is in the open position, the door cooperating with the housing sidewall to encompass the blade, and the door cooperating with the grater blade to define a variable volume food-receiving compartment which has a greater volume when the moveable door is in the open position than when the moveable door is in the closed position; and

an actuator coupled to the grater blade or housing sidewall effecting relative movement therebetween.

5,702,062

TAPE CASSETTE

Nobuyuki Kaku, Kanagawa; Seiji Ono, Yokohama; Yoshimi Maehara, Ootsu, and Mikihisa Inoue, Kyoto, all of Japan, assignors to Hitachi Maxell, Ltd, Osaka, and Hitachi, Ltd., Tokyo, both of Japan

Continuation of Ser. No. 359,849, Dec. 20, 1994, abandoned, which is a continuation of Ser. No. 106,999, Aug. 17, 1993, abandoned. This application Feb. 27, 1996, Ser. No. 607,524

Int. Cl.[6] G11B *23/04*

U.S. Cl. 242—338.4 **6 Claims**

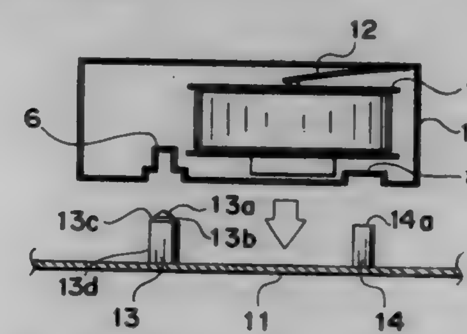

1. A tape cassette positioning system comprising:

a tape cassette shell; and

a magnetic recording/playback apparatus, the recording/playback apparatus including at least a first and second positioning pin against which is placed the shell when the shell is inserted into a cavity within the recording/playback apparatus;

wherein the shell includes:

a casing for housing tape reels, said casing including on a bottom face thereof:

a two-stage recess for positioning said tape cassette shell in the magnetic recording/reproducing apparatus by receiving the first positioning pin thereof; and

a one-stage recess for constraining an ultimate depth to which said tape cassette shell is positioned on said recording/reproducing apparatus via receiving the second positioning pin;

wherein said two-stage recess includes:

a first stage having a recess plane surface at a first depth relative to the bottom face of the casing; and

a second stage, located within said first stage, having a positioning portion having a deeper recess relative to the bottom face of the casing than said first stage of said two-stage recess;

wherein the first positioning pin, corresponding to said two-stage stepped reference recess, includes:

an upper part for precisely positioning said casing of said tape cassette shell on said recording/reproducing apparatus via insertion into the second stage of the two-stage recess; and

a lower part having a surface parallel with and mating with the first stage of said two-stage recess;

wherein a perimeter of the lower part of the first positioning pin does not fit snugly against a lateral wall of said first stage of the two-stage recess such that a gap is formed therebetween; and

wherein a perimeter of the upper part of the first positioning pin fits snugly into the recess of said second stage of the two-stage recess such that substantially no gap is formed therebetween.

5,702,063

YARN SUPPORT WITH MEANS FOR ANCHORING A YARN END

Marco Bottari, Prato, Italy, assignor to Mariplast S.p.A., Prato, Italy

Filed May 16, 1996, Ser. No. 648,567

Claims priority, application Italy, May 19, 1995, FI95A0110

Int. Cl.[6] B65H *75/28;55/00*

U.S. Cl. 242—125.2 **8 Claims**

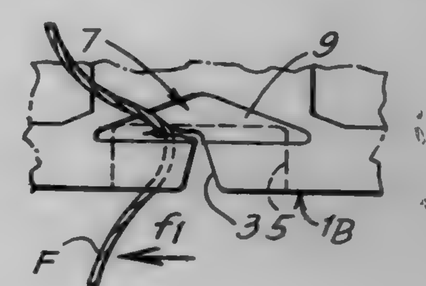

1. A yarn support comprising:

a yarn support body made from molded the thermoplastic resin on which yarn is wound into packages, said yarn support body having an edge defining a guide notch, said yarn support body having a lateral annular zone on which a number of turns of "reserve" yarn are wound;

a diaphragm connected to said yarn support body, said diaphragm having an edge extending across said guide notch, said diaphragm having holding means formed of a material and having a thickness for causing said diaphragm to be torn by a yarn inserted into said guide notch and forced against said diaphragm.

5,702,064

CASSETTE HOUSING ASSEMBLY OF A TAPE RECORDER HAVING A PHASE DIFFERENCE CORRECTOR

Joung-Chan Lee, Suwon, Rep. of Korea, assignor to Samsung Electronics Co., Ltd., Kyungki-do, Rep. of Korea

Filed May 29, 1996, Ser. No. 654,896

Claims priority, application Rep. of Korea, Sep. 12, 1995, 95-29693

Int. Cl.[6] G11B *23/04*

U.S. Cl. 242—338.4 **5 Claims**

1. A housing assembly of a tape recorder, comprising:

a housing for receiving a tape cassette, said housing being supported by a deck member while ascending and descending during operation, said housing including an outer surface and two sides;

at least one arm member installed on each of said two sides of said housing for supporting said housing with respect to said deck member;

a shaft extending across said housing;

first and second gears respectively coupled to both ends of said shaft;

first and second sector gears respectively coupled to ends of said arm members and being meshed with said first and second gears, respectively; and

locking means installed on one of said two sides of said housing, for selectively locking said housing at a loaded position on said deck member,

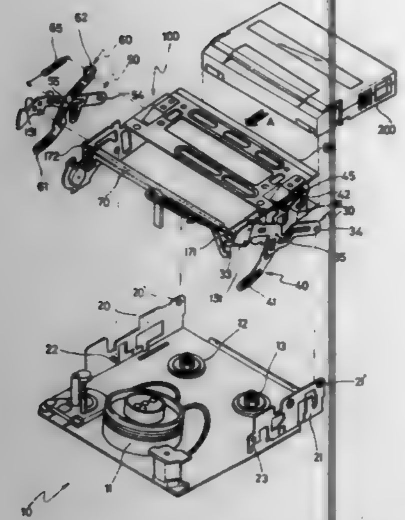

wherein the radius of said first gear is smaller than that of said second gear, thereby to cause said two sides of said housing to rotate at an equal rotating angle when said housing is rotated by pressing a specified point on one side of the outer surface of said housing.

5,702,065

TAPE CARTRIDGE WITH REDUCED TANGENTIAL DRIVE FORCE

Leonard C. Badour, San Diego; Robert F. Stebe, Vista, and John L. Haller, La Jolla, all of Calif., assignors to Gigatek Memory Systems, La Costa, Calif.

Continuation-in-part of Ser. No. 184,598, Jan. 21, 1994, abandoned. This application Nov. 3, 1994, Ser. No. 333,793

Int. Cl.⁶ G11B *23/087;23/04*

U.S. Cl. 242—342 **14 Claims**

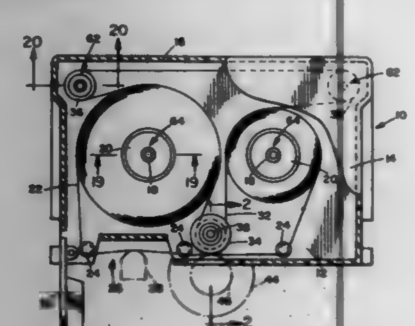

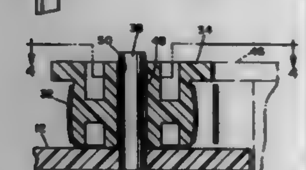

1. A belt-driven tape cartridge, comprising:

an outer housing, the housing having a front wall with a drive opening for receiving an externally mounted drive roller of a tape drive;

first and second tape spools rotatably mounted in the housing;

a length of tape having a first end portion wound on the first tape spool and a second end portion wound on the second tape spool, whereby rotation of the tape spools in opposite directions transfers tape back and forth between the spools;

at least three roller supporting pins rigidly mounted in the housing, including a first roller supporting pin located adjacent said drive opening;

a belt driving roller rotatably mounted on said first roller supporting pin, said driving roller having a circumferential driving surface facing said drive opening for contact with a drive roller extending through said opening to rotate said driving roller;

belt guide rollers respectively mounted on the other two roller supporting pins;

an endless drive belt extending around said driving roller and guide rollers to contact said tape portions wound on each of the tape spools; and

said first roller supporting pin having a central axis and a cylindrical outer surface with at least one recess extending at least over a portion of said surface facing said drive opening, said recess comprising an elongate groove extending parallel to the central axis of said first roller supporting pin, said recess comprising means for reducing the bearing surface area between said roller and roller supporting pin, whereby the tangential drive force required to rotate said driving roller is reduced.

5,702,066

OPTICAL FIBER SPOOL AND METHOD OF LOADING SPOOL

Jerry C. Hurst, and Brian D. Potteiger, both of Reading, Pa., assignors to Lucent Technologies Inc., Murray Hill, N.J.

Filed Dec. 5, 1996, Ser. No. 760,846

Int. Cl.⁶ B65H *75/14;75/18;75/24;18/28*

U.S. Cl. 242—601 **18 Claims**

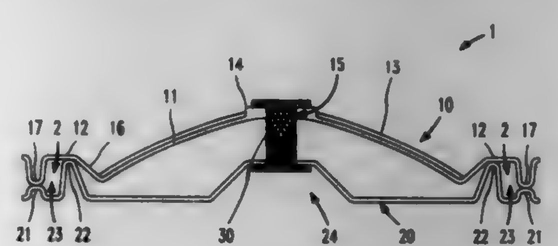

1. A spool having a normally-closed position for storing strands of material and an open position for loading and unloading of the strands of material, wherein said spool comprises:

a lid having a circular center region and a plurality of radial tabs spaced throughout the circumference of said circular center region; and

a base secured to said lid, wherein a plurality of cavities are formed between said base and said plurality of radial tabs, said plurality of radial tabs pivot into said open position when an external force is applied upon said circular center region of said lid, and said plurality of radial tabs maintain said normally-closed position when said external force is not being applied upon said circular center region of said lid.

5,702,067

METHOD AND APPARATUS FOR DETERMINING THE ANGULAR MOMENTUM VECTOR OF A SATELLITE

Ernst Bruederle, Ottobrunn, Germany, assignor to Daimler-Benz Aerospace AG, Germany

Filed Sep. 11, 1995, Ser. No. 526,566

Claims priority, application Germany, Sep. 10, 1994, P 44 32 265.8

Int. Cl.⁶ B64G *1/36*

U.S. Cl. 244—170 **6 Claims**

1. Method for determining an angular momentum vector H of an object located in an externally generated magnetic field B, relative to an orthogonal system of coordinates whose axes x,y,z coincide with main inertia axes of the object, said object having a magnetometer for measuring magnetic field strength in the direction of

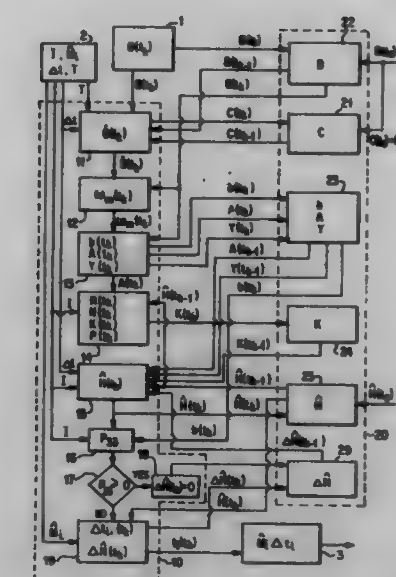

said x, y and z axes, and a torque generating system for producing torque pulses about all three axes, said method comprising the steps of:

measuring magnetic field strength B of said externally generated magnetic field along said x, y and z axes by means of said magnetometer, wherein $B=(B_i)^T$ $(i=x_1y,z)$;

entering measured values of said magnetic field strength B into a computer;

said computer calculating estimated values $\hat{H}$ of angular momentum of said object at successive points in time, for each calculation using most recently measured values of said magnetic field strength and integrating the observer equation

$$\dot{\hat{H}}=\hat{H}\times I^{-1}\hat{H}+I^{-1}A^TK(Y-AI^{-1}\hat{H})+\hat{M}$$

with

$$Y=\frac{B\times B}{|B|^2}$$

wherein $\hat{M}$ is an estimated value for an angular torque vector; I is an inertia matrix of the satellite, and I^{-1} is its inverse matrix; A is a quadratic matrix of rank 3 with three mutually orthogonal line vectors, one of which coincides with a normalized magnetic field vector $b=B/|B|$, and A^T is its transposed matrix; K is a quadratic starting matrix $K=(k_{lm})$ with rank 3 ($l,m=1,2,3$), with coefficients k_{lm} equal to zero in a column whose number coincides with a number of the line in matrix A in which the normalized magnetic field vector b is located, and whose other coefficients must be determined in such fashion that the matrix

$$P=\frac{1}{2}K+\frac{1}{2}K^T-N$$

is positively definite or semi-definite; with

$$N=ARA^T$$

$$R=\frac{1}{2}\begin{pmatrix} 0 & \hat{H}_z(I_y-I_x) & \hat{H}_y(I_x-I_z) \\ \hat{H}_z(I_y-I_x) & 0 & \hat{H}_x(I_z-I_y) \\ \hat{H}_y(I_x-I_z) & \hat{H}_x(I_z-I_y) & 0 \end{pmatrix}$$

wherein $I_{x,y,z}$ represent diagonal components of inertia matrix I;

continuously checking calculated values $\hat{H}$ and current measured values of said normalized magnetic field vector b to determine whether an inequality

$$(Ib\times b)^T\hat{H}\geq 0$$

is satisfied;

if said inequality is not satisfied, said torque generating system applying a torque $M=(M_x,M_y,M_z)^T$ to said object for time intervals Δt_x, Δt_y, Δt_z, to cause a change in angular momentum $\Delta\hat{H}=(\hat{M}_i\Delta t_i)^T$ whereby said inequality is satisfied; and

performing successive integrations until such integrations no longer result in a change in $|\hat{H}|$, whereby the calculated value of $\hat{H}$ is equal to an actual angular momentum vector H of said object.

5,702,068

SEEKER HEAD PARTICULARLY FOR AUTOMATIC TARGET TRACKING

Alfred Stoll, Überlingen-Nussdorf; Wolfgang Gulitz, Überlingen; Hans Tessari, Überlingen, and Reiner Eckhardt, Überlingen, all of Germany, assignors to Bodenseewerk Gerätetechnik GmbH, Uberlingen, Germany

Filed Sep. 25, 1979, Ser. No. 79,479

Claims priority, application Germany, Sep. 29, 1978, 28 41 748.3

Int. Cl.⁶ F41G *7/26*

U.S. Cl. 244—3.16 **8 Claims**

1. A system comprising:

(a) a carrier,

(b) a seeker head movably mounted on the carrier to "look" towards a target,

(c) field of view scanning means associated with the seeker head for periodically scanning a field of view observed by the seeker head,

(d) a gyro assembly associated with the seeker head,

(e) image storing means for storing the results of scans, and

(f) a coordinate transformer circuit receiving signals generated by the gyro assembly and controlled thereby to reference and compare the images of two consecutive scans to a common coordinate system.

5,702,069

UNLOCKABLE CONNECTION DEVICE

Freddy Geyer, Tanneron; Gérard Vezain, Mandelieu, and Christian Roux, Grasse, all of France, assignors to Aerospatiale Societe Nationale Industrielle, France

Filed Aug. 30, 1995, Ser. No. 520,848

Claims priority, application France, Aug. 30, 1994, 94 10423

Int. Cl.⁶ B64D *1/12;* **B64G** *1/64*

U.S. Cl. 244—161 **10 Claims**

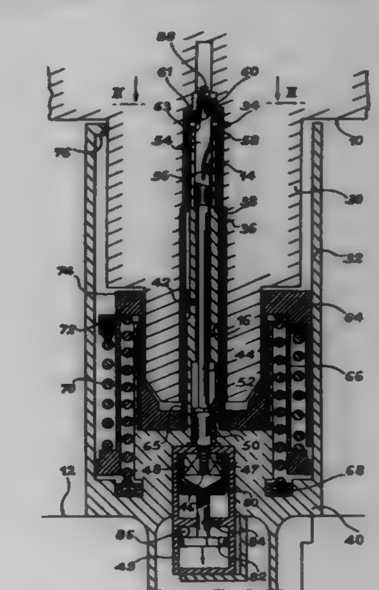

1. An unlockable connection device to connect a first object and a second object, comprising:

a tube member secured to the first object;

a rod member having a longitudinal axis;
an unlockable blocking means adapted to immobilize a first end of the rod member with respect to the second object;
unlocking initiating means adapted to control unlocking of the blocking means;
resilient means adapted to move the rod member in a direction along its longitudinal axis, away from the second object, upon unlocking of the blocking means;
a rotary key system carried by a second end of the rod member and engaging an end wall of the tube member; and
means for controlling a rotation of said key system about the longitudinal axis of the rod member, when the rod member moves in said direction, thereby to free the key system from said end wall whereby the attitude and velocity of the second object are controlled upon release from the first object.

5,702,070
APPARATUS AND METHOD USING RELATIVE GPS POSITIONING FOR AIRCRAFT PRECISION APPROACH AND LANDING
James D. Waid, Grove City, Ohio, assignor to E-Systems, Inc., Dallas, Tex.
Filed Sep. 20, 1995, Ser. No. 531,133
Int. Cl.^{6} G01S *13/86;* **G08G** *5/02*
U.S. Cl. 244—183 **21 Claims**

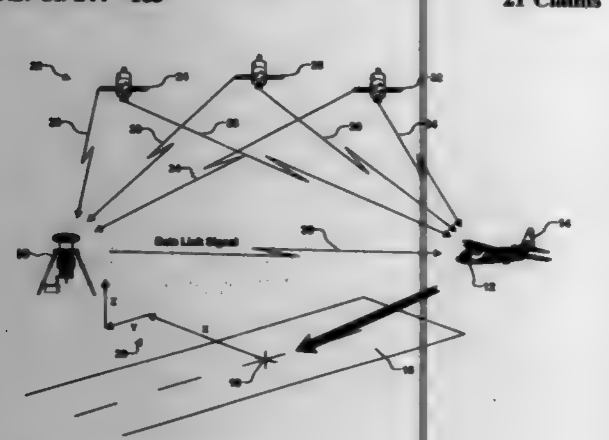

1. A navigation system for an aircraft, comprising:
a ground station comprising:
a first navigation receiver coupled to an antenna to receive satellite navigation signals transmitted from a plurality of satellites, said first navigation receiver generating pseudorange data corresponding to each of said plurality of satellites;
a ground station processor for processing the pseudorange data and offset data identifying the location of the ground station relative to an aircraft runway touchdown position, said processor generating a ground station data message;
a data input interface for inputting the offset data to the ground station processor;
an encoder for encoding the ground station data message;
a datalink transmitter coupled to said encoder and to a datalink antenna for transmitting the encoded ground station data message over a datalink; and
an airborne station aboard the aircraft comprising:
a second navigation receiver coupled to an antenna to receive satellite navigation signals transmitted from a plurality of satellites;
a datalink receiver coupled to an antenna for receiving the encoded ground station data message over the datalink;
a decoder for decoding the encoded ground station data message received via the datalink; and
an airborne station processor coupled to said decoder for calculating a relative position of the ground station using the decoded ground station data message and a relative position of the aircraft using the satellite navigation signals received by the second navigation receiver, said airborne station processor generating a relative position vector corresponding to the position of the aircraft relative to a reference point, said airborne station processor generating the relative position vector from the offset data and from the relative positions of the ground station and the aircraft, and said airborne station processor computing guidance information from the relative position vector.

5,702,071
DEPLOYABLE VORTEX TURBINE FOR DISSIPATING OR EXTRACTING ENERGY FROM A LIFT INDUCED VORTEX EMANATING FROM AN AIRCRAFT
William B. Kroll, Roscoe, and Patrick D. Curran, Rockford, both of Ill., assignors to Sundstrand Corporation, Rockford, Ill.
Filed Jun. 7, 1995, Ser. No. 481,679
Int. Cl.^{6} B64C *23/06;* **B64D** *41/00*
U.S. Cl. 244—199 **24 Claims**

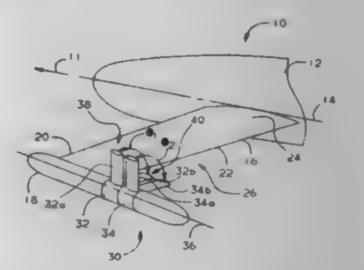

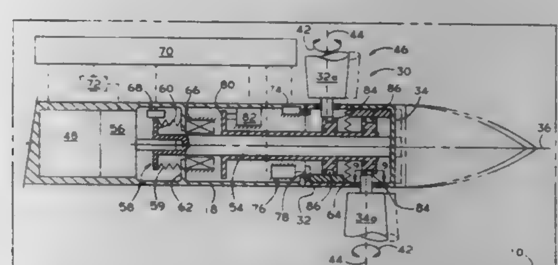

1. In an aircraft having a body defining a fore and aft axis of said aircraft and a wing extending generally horizontally from said body to a wingtip at the distal end of said wing such that said aircraft and said wing define a minimum ground clearance of said wing and said wingtip defines a maximum horizontal extension of said wing, a deployable vortex turbine disposed to intercept a lift induced vortex generated by a portion of said wing said deployable vortex turbine comprising:
a turbine including a first and second hub section disposed about an axis of rotation within the lift induced vortex, each of said first and second hub sections having at least one blade extending generally radially therefrom with respect to said axis of rotation;
means for rotating at least one of said hub sections about said axis between a deployed position whereat said at least one blade on said rotatable hub section extends either below said minimum ground clearance or beyond said maximum horizontal extension of said wing to a stowed position at which said blade on said rotatable hub section does not extend below said minimum ground clearance or beyond said maximum horizontal extension of said wing.

5,702,072
AILERON/FLAP MIXING MECHANISM
Steve R. Nusbaum, 10419 VanderKarr Rd., Hebron, Ill. 60034
Filed Jun. 30, 1995, Ser. No. 497,103
Int. Cl.^{6} B64C *13/04*
U.S. Cl. 244—225 **14 Claims**

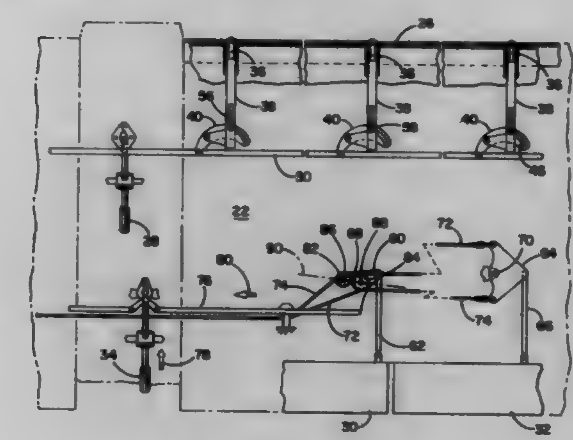

1. A system for drooping the ailerons of an aircraft when the flaps of the aircraft are lowered, said system comprising:
a pilot actuated flap control including a flap bellcrank for lowering the flaps of the aircraft;
a pilot actuated aileron control including an aileron bellcrank and a pair of aileron control cables coupled thereto for varying the positions of the ailerons to control the roll and bank of the aircraft; and
a mixing interface including a pair of pulley devices mounted for rotation on said flap bellcrank wherein said pair of control cables are threaded around and between said pulley devices and operative between said flap control and said aileron control to simultaneously droop the ailerons of the aircraft in response to pilot inputs to said flap control to lower the flaps while permitting said aileron control to vary the positions of the ailerons relative to each other thereby to maintain pilot control over aircraft bank and roll.

5,702,073
MODULAR LIQUID SKIN HEAT EXCHANGER
Kyle G. Fluegel, Greenville, Tex., assignor to E-Systems, Inc., Dallas, Tex.
Division of Ser. No. 421,262, Apr. 13, 1995, which is a continuation of Ser. No. 52,704, Apr. 27, 1993, Pat. No. 5,423,498. This application Mar. 22, 1996, Ser. No. 620,992
Int. Cl.^{6} B64D *47/00*
U.S. Cl. 244—57 **10 Claims**

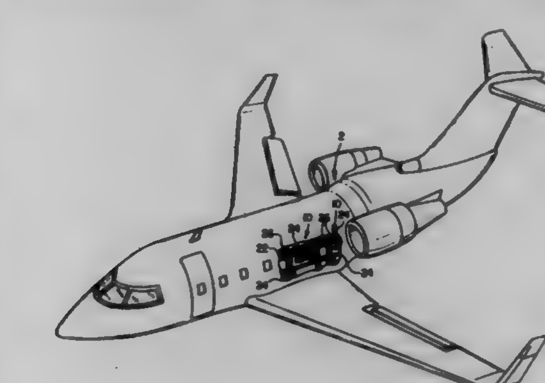

1. A method of cooling an on-board electronics system for an aircraft including an arcuate planer fuselage skin having a radius R_1, comprising the steps of:
mounting at least one heat exchange module having a flexible arcuate spreader plate where the spreader plate has a radius R_2, with $R_1>R_2$, in thermal contact with the fuselage skin of the aircraft, each heat exchange module having at least one heat exchange tube in thermal contact with the arcuate spreader plate;
coupling each heat exchange tube of the at least one heat exchange module to the on-board electronics system; and
circulating a liquid coolant through the on-board electronics system and through at least one heat exchange tube of at least one heat exchange module.

5,702,074
RAILWAY SWITCH HEATING APPARATUS
Garril J. Paterick-Smith, Orleans, and David H. Gerwing, Greely, both of Canada, assignors to Hovey Industries, Ltd., Gloucester, Canada
Filed Sep. 29, 1995, Ser. No. 536,642
Int. Cl.^{6} E01B *7/24*
U.S. Cl. 246—428 **13 Claims**

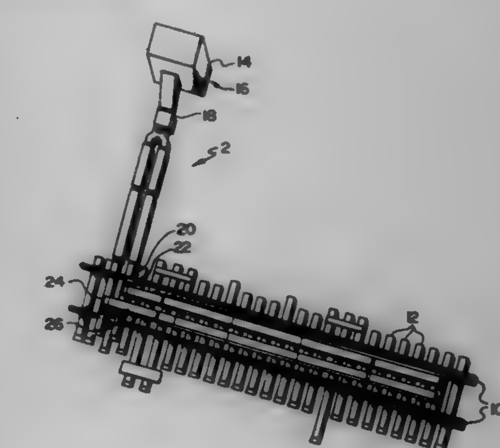

1. For use in the heating of a railway switch assembly, an apparatus comprising:
a hollow structural member adapted to replace a track supporting member in supporting a pair of rails and adapted to be connected to a source of heated air;
a flexible connection between said structural member and said source of heated air, said flexible connection permitting axial and rotational movement between said structural member and said source of heated air;
discharge means for distributing said heated air from said hollow structural member to at least one desired location on said assembly; and
an electrically insulating assembly for inserting between said hollow structural member and rails, said insulating assembly comprising an insulating pad on said hollow structural member, a steel pad resting on said insulating pad, said steel pad provided with at least one rail securing clip with a clip insulating pad deposed between said steel pad and said at least one rail securing clip, and a polyurethane pad resting interposed between said steel pad and said rails.

5,702,075
AUTOMATICALLY COLLAPSIBLE SUPPORT FOR AN ELECTRICAL CORD FOR USE WITH AN IRONING BOARD
David Lehrman, 207 Barclay Cir., Cheltenham, Pa. 19012, assignor to David Lehrman, Philadelphia, Pa.
Filed Jan. 31, 1996, Ser. No. 595,010
Int. Cl.[6] D06F *81/00;* **F16L** *3/00*
U.S. Cl. 248—51 **20 Claims**

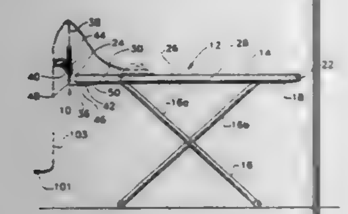

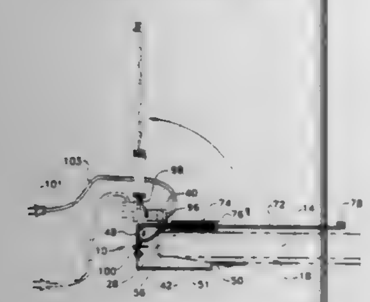

1. A cord support adapted to be carried by a structure, the cord support comprising:
- a mounting bracket having a support arm adapted to be secured to the structure, a first upstanding side wall segment, and a second upstanding side wall segment being pivotably connected to the first upstanding side wall segment for movement between a raised position wherein the first and second side wall segments are substantially coplanar with respect to each other and a collapsed position wherein the first and second side wall segments are substantially perpendicular to each other;
- a support mast carried by the second side wall segment and extending therefrom, the support mast having a cord receiving portion;
- a biasing element acting against at least the second side wall segment for biasing the second side wall segment and the support mast carried thereon towards the collapsed position; and
- a detent for retaining the second side wall segment and the support mast in the raised position.

5,702,076
INSULATOR FOR MOUNTING PIPE IN METAL WALL STUD
Jeffrey A. Humber, Memphis, Tenn., assignor to IPS Corporation, Collierville, Tenn.
Continuation of Ser. No. 298,454, Aug. 30, 1994, abandoned. This application Apr. 8, 1996, Ser. No. 629,063
Int. Cl.[6] F16L *5/00*
U.S. Cl. 248—57 **12 Claims**

1. An insulator for mounting pipe in a hole through a sheet metal stud, the insulator comprising:
- a generally cylindrical body sized to fit within a variably sized hole pre-punched in an intermediate planar portion of a sheet metal wall stud, wherein the cylindrical body is split with an axial slot, the slot having a flange end and a distal end, wherein the flange end of the axial slot is bridged by one of the pipe gripping segments, thereby preventing the cylindrical body from being opened;

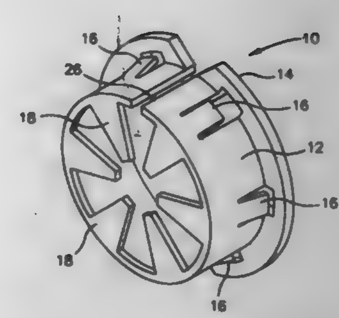

- a mounting flange extending radially from the cylindrical body for overlying a periphery of the intermediate planar portion of the sheet metal wall stud surrounding the hole;
- a plurality of mounting fingers extending from the cylindrical body and spaced from the mounting flange for holding the flange against the periphery of the intermediate planar portion of the sheet metal wall stud surrounding the hole, the mounting fingers having different spacings from the mounting flange to accommodate different thicknesses of the intermediate planar portion of the sheet metal wall stud and radially protruding a sufficient distance from the cylindrical body to accommodate the variably sized hole pre-punched in the intermediate planar portion of the sheet metal wall stud; and
- a plurality of pipe gripping segments which extend radially inwardly from the cylindrical body toward a center line of the body and are bendable a sufficient amount to permit passage of a pipe having a predetermined diameter through the center of the cylindrical body while holding the pipe rigidly in position.

5,702,077
THREADED BRACKET FOR HANGER ROD
Richard W. Heath, Yorba Linda, Calif., assignor to Tolco, Incorporated, Corona, Calif.
Filed May 9, 1995, Ser. No. 438,171
Int. Cl.[6] F16L *3/00*
U.S. Cl. 248—59 **9 Claims**

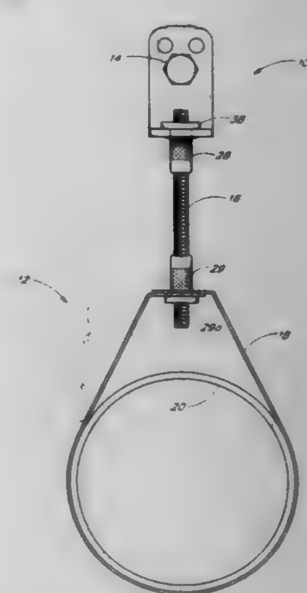

1. A pipe support assembly for suspending a pipe, comprising:
- a pipe hanger rod;
- means for receiving and supporting the pipe when attached to a lower end of said rod;
- a bracket for attachment to a raised support; and
- a barrel nut having a cylindrical portion extending through a hole in the bracket, with a flange on one end of the nut engaging an area of the bracket surrounding the hole, said nut having internal threads threadably receiving an upper threaded end of said rod, the material of said bracket forming said hole being deformed against the cylindrical portion of the nut to grip the nut and prevent movement of the nut relative to the bracket when the rod is inserted into an opposite end of the nut and rotated into threaded engagement with the internal threads.

5,702,078
HAND STABILIZING IDENTIFICATION MEMBER FOR AN INSTRUMENT PANEL
Jeffery H. Shaw, Seattle, Wash., assignor to PACCAR Inc., Bellevue, Wash.
Filed May 24, 1995, Ser. No. 448,739
Int. Cl.[6] B62D *25/14;* **F21V** *33/00*
U.S. Cl. 248—118 **17 Claims**

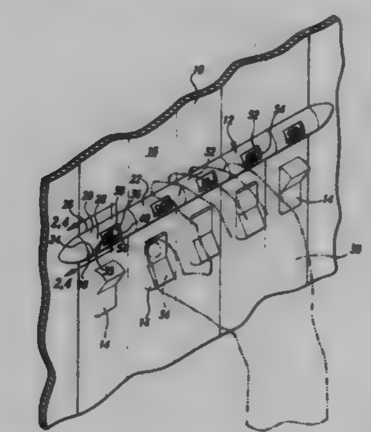

1. A vehicle instrument panel assembly, comprising:
- an instrument panel;
- a plurality of components connected to said instrument panel, one of said components having a control device that is controllable by a first portion of a hand of a user; and
- a hand stabilizing member attached to said instrument panel adjacent to said plurality of components, said hand stabilizing member extending in a first direction away from said instrument panel and extending substantially horizontally in a second direction along a portion of said instrument panel, said hand stabilizing member having a support surface extending in said first direction away from said instrument panel, said support surface being a first distance from said control device that allows a user to engage said control device with said first portion of the user's hand while a second portion of the user's hand engages said support surface and substantially stabilizes the user's hand from movement relative to said control device, said hand stabilizing member including a tactile locating member thereon, said tactile locating member being positioned substantially adjacent to one of said components to non-visually identify to the user a location of said adjacent component.

5,702,079
BAT MEDIA SUPPORT FRAME APPARATUS AND METHOD
David S. MacLaren, Gates Mills, Ohio, assignor to Jet Inc., Cleveland, Ohio
Filed Jun. 7, 1995, Ser. No. 476,696
Int. Cl.[6] A47D *19/04*
U.S. Cl. 248—127 **29 Claims**

1. An apparatus for supporting biofilm media, comprising:
- (a) a first frame comprising rigidly connected members assembled in a shape having a top, a bottom, and a plurality of sides, the plurality of sides having upper members which

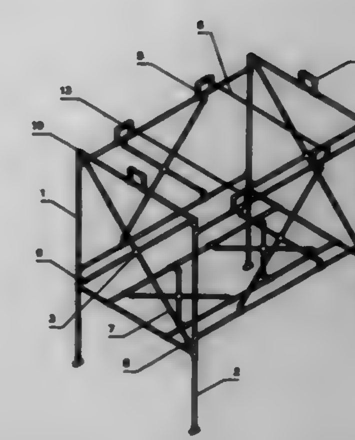

define the top of the first frame, the plurality of sides further comprise first sides and ends, the upper members of the ends being at a higher level than the upper members of the first sides;
- (b) the bottom and the plurality of sides being reinforced with cross-members so that sheet media may be introduced to the first frame and held within the first frame by the cross-members;
- (c) legs extending downward from the bottom of the first frame; and
- (d) a movable restraining device having a first end and a second end and connected to the frame at the first end.

5,702,080
COMBINATION END CAP AND CLIP FOR BIOPSY FORCEPS INSTRUMENT
John R. Whittier, Miami; Sylvestre Cordoba, Miami Springs, both of Fla., and Bruce H. Diamond, Brookline, Mass., assignors to Symbiosis Corporation, Miami, Fla.
Filed Jan. 18, 1995, Ser. No. 375,402
Int. Cl.[6] F16B *47/00*
U.S. Cl. 248—205.5 **20 Claims**

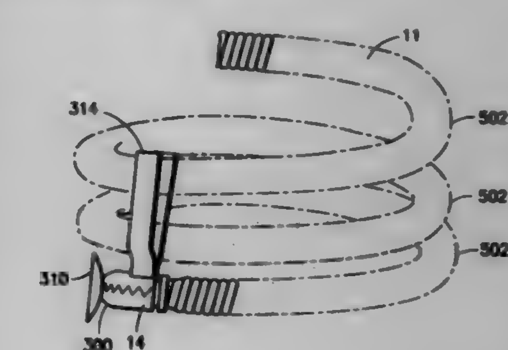

11. A combination of an end cap and a biopsy forceps instrument,
- said biopsy forceps instrument comprising a coil section and a jaw section,
- said end cap comprising a hollow cup having an open proximal end, a closed distal end, and side walls, said open proximal end removably fitting over the jaw section, and
- an affixing means for affixing said cap to a planar surface, said affixing means extending from said hollow cup.

5,702,081

BRACKET APPARATUS

William E. Gallemore, II, Colleyville, Tex., assignor to National Banner Company, Inc., Dallas, Tex.

Filed Dec. 13, 1995, Ser. No. 571,767

Int. Cl.^{6} A47B *96/06*

U.S. Cl. 248—218.4 **16 Claims**

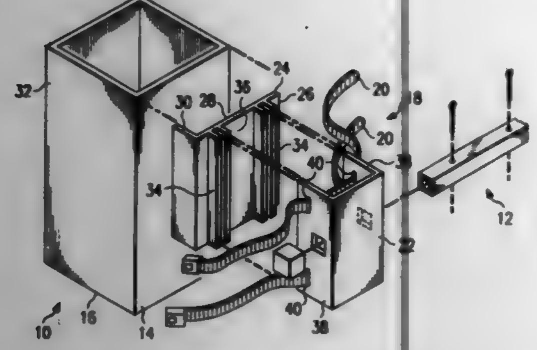

1. A bracket apparatus for mounting a cantilevered assembly to a pole, said cantilevered assembly comprising a cantilever strut, and said pole comprising a first planar surface and a second planar surface, wherein said bracket apparatus comprises:

a) a generally C-shaped bracket having opposed sidewalls, each said sidewall having a primary aperture adapted to receive said cantilevered strut, and at least one secondary aperture;

b) at least one fastening strap passing through said at least one secondary aperture in each said sidewall of said C-shaped bracket and adapted to encircle said pole;

c) a mounting bracket adapted to be sandwiched between said pole and said C-shaped bracket, comprising a first body portion and a second body portion, said first body portion of said mounting bracket having a first surface adapted to abuttingly engage said first planar surface of said pole and a second surface having means for securing said C-shaped bracket to said mounting bracket, said second body portion of said mounting bracket having a first surface adapted to abuttingly engage said second planar surface of said pole.

5,702,082

LAMP-HOLDING HOOK CLAMP

Nigel Evans; William E. Hewlett, both of Pasadena, Calif., and Richard Parker, Birmingham, United Kingdom, assignors to Light & Sound Design Ltd., Birmininghain, England

Filed May 30, 1995, Ser. No. 453,505

Int. Cl.^{6} A47B *96/06*

U.S. Cl. 248—230.1 **11 Claims**

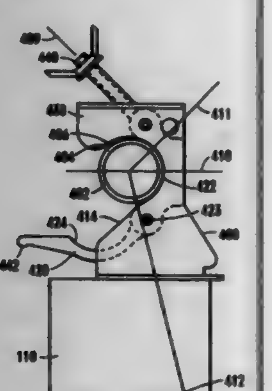

1. A support apparatus for holding a lamp comprising:

a cylindrical support having a predetermined outer size and shape; and

a clamp comprising:

a first base portion, comprising inner surfaces including a first inner surface having a shape which is substantially the same size and shape as an outer surface of said support, said base portion including at least a first hook portion which forms a cylindrically-inner shaped notch portion having inner surfaces which are substantially the same size and shape as the outer surface of said support, said hook portion hooking over the cylindrical support to form a first portion which extends below and contacts a top of the support on a first side of the support to form a hooked area, a second portion which is substantially the same size and shape as the outer surface of said support, and which extends below said top of the support on a second side of the support, and an opening,

a closable element, movable relative to said first portion between a first position where said opening is open, and a second position where said opening is closed,

a closure mechanism, connected to said first portion and to said closable element, and connectable between said first portion and said closable element when said closable element is located in said second position to close said opening, and selectively tightenable to tighten inner surfaces of said hook clamp against said opening, and

a lamp attachment portion coupled to the first base portion aligned directly below said top of the support, disposed such that substantially all the weight of said clamp is borne by said first and second portions, when said closeable element is in said first open position.

5,702,083

PNEUMATIC CYLINDER OF A PNEUMATIC LEVER-LIFT CHAIR, AND ITS ASSEMBLY PROCESS

Shiang-Hwey Lai, No. 23, Lane 1, Ta-Yuan 19 Str., Tai-Ping Hsiang, Taichung, Hsien, Taiwan

Filed Apr. 17, 1996, Ser. No. 633,317

Int. Cl.^{6} F16M *11/00*

U.S. Cl. 248—404 **2 Claims**

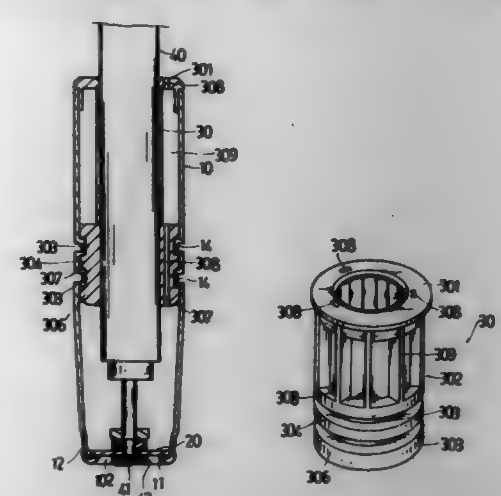

1. A pneumatic cylinder for use in a pneumatic lever-lift chair, and its assembly process, the pneumatic cylinder comprising a cylindrical casing having a top opening, a bottom opening, and an inward bottom flange projecting into said bottom opening, a stop plate mounted within said cylindrical casing and fixedly secured to the inward bottom flange of said cylindrical casing, and an inner barrel mounted inside said cylindrical casing, wherein:

said stop plate has a plurality of raised portions at a bottom side respectively welded to the inward bottom flange of said cylindrical casing;

said cylindrical casing comprises a dent formed around the periphery and stopped above said stop plate, and a plurality of inside annular flanges vertically spaced around the periphery above said dent;

said inner barrel comprises a hollow cylindrical body, an outward top flange stopped above the top opening of said cylindrical casing, a plurality of longitudinal ribs equiangularly spaced around an upper part of said cylindrical body on the outside, a plurality of outside annular grooves vertically spaced around a lower part of said cylindrical body on the outside and defining a plurality of vertically spaced convex portion between each two adjacent outside annular grooves, a bottom flange, and a plurality of longitudinal exhaust holes through the outward top flange and bottom flange of said inner barrel at locations corresponding to said longitudinal ribs, the convex portions and bottom flange of said inner barrel having a respective circularly chamfered bottom edge, the annular grooves of said inner barrel being forced into engagement with the inside annular flanges of said cylindrical casing respectively.

5,702,084

HI TEC SWIVEL AND SLIDE

Garnett Carnahan, and Caroline Carnahan, both of Rte. 3, Box 18, Nixa, Mo. 65714

Filed Feb. 15, 1995, Ser. No. 388,833

Int. Cl.^{6} F16M *13/00*

U.S. Cl. 248—416 **13 Claims**

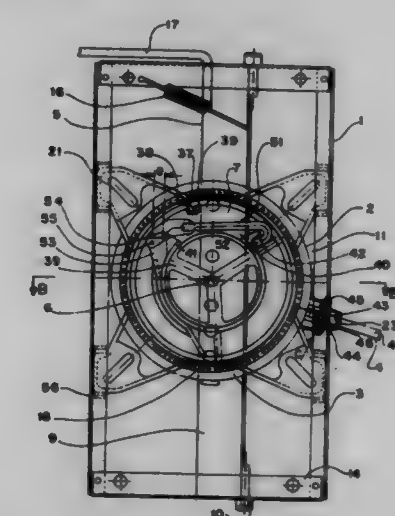

1. A swivel and slide assembly, comprising:

a slide base that includes a first longitudinal sliding component;

a first swivel base that includes a second longitudinal sliding component which is dimensioned to provide, in conjunction with said first longitudinal sliding component, guided longitudinal sliding between said first swivel base and slide base; and

a second swivel base positioned radially inward of said first swivel base, said second swivel base having a first bearing reception ring which defines one portion of a bearing reception cavity, said first bearing reception ring having a first confronting face which is angled radially outward with respect to a section of an axial center line of said first swivel base extending through said slide base, and said first swivel base having a second bearing reception ring which defines another portion of a bearing reception cavity and which includes a second confronting face which is angled in a corresponding manner as said first confronting face such that loads on said slide base and swivel bases are directed radially inward toward the axial center line of said first swivel base; and

a first locking mechanism supported by said slide base, and positioned so as to engage said second swivel base when in a locking state.

5,702,085

SUPPORT FOR BALANCING SCULPTURE

Ofer Nissim, Pound Ridge, N.Y., and Marc Goldblatt, Stamford, Conn., assignors to Ark Foundation, LLC, Norwalk, Conn.

Filed May 17, 1996, Ser. No. 649,293

Int. Cl.^{6} A47G *1/16*

U.S. Cl. 248—475.1 **6 Claims**

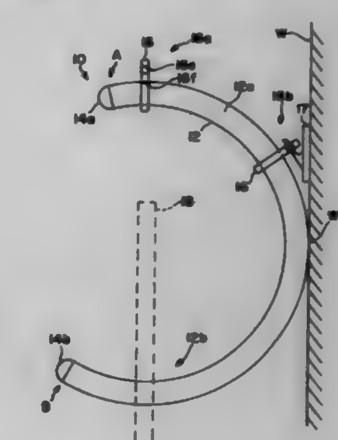

2. A support for a balancing sculpture comprising a perch member defining an arc of a circle having a lower reach for receiving and displaying a balancing sculpture, a hanger slidably mounted on the perch for movement between a first position wherein the support is suspended from a ceiling by means of a line engaging the hanger, and a second position wherein the support is mounted on a wall by means of a wall hook engaging the hanger so that the perch is maintained in the second position by the wall hook and by contact between the perch and the wall, the hanger being a plate with a top aperture for receiving said line, and a lower aperture for fitting onto the perch in sliding relation thereto.

5,702,086

PORTABLE TREE HOLDING DEVICE

Randy D. Hunt, 20780 Armstrong P.O. Box 81, Laton, Calif. 93242

Filed May 7, 1996, Ser. No. 643,832

Int. Cl.^{6} F16M *13/00*

U.S. Cl. 248—519 **10 Claims**

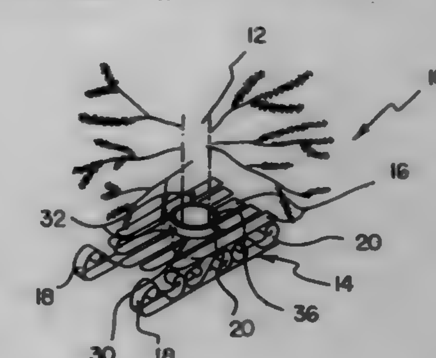

3. A portable tree holding device comprising:

a tree transport apparatus for transporting a tree along the ground, said transport apparatus comprising

a substantially planar platform;

a pair of sled runners mounted to said platform for supporting said platform in an elevated condition above the ground; and

a tree trunk mounting means for supporting a tree on said platform in a substantially vertical orientation and comprising a mounting cup removably mountable to the trunk of a tree to be transported on said transport apparatus, said mounting cup

being mounted on said platform for removability of said cup from said platform in an upwards direction without requiring removal of said mounting cup from the trunk of a tree.

5,702,087
ASEISMIC SUPPORT STRUCTURE
Takeshi Tsukamoto, Ohtsu; Hiroshi Suzuki, and Akira Suzuki, both of Ohmihachiman, all of Japan, assignors to International Business Machines Corporation, Armonk, N.Y.
Filed Dec. 12, 1995, Ser. No. 570,789
Claims priority, application Japan, Mar. 2, 1995, 7-042747
Int. Cl.[6] E04F *15/00*
U.S. Cl. 248—638 **9 Claims**

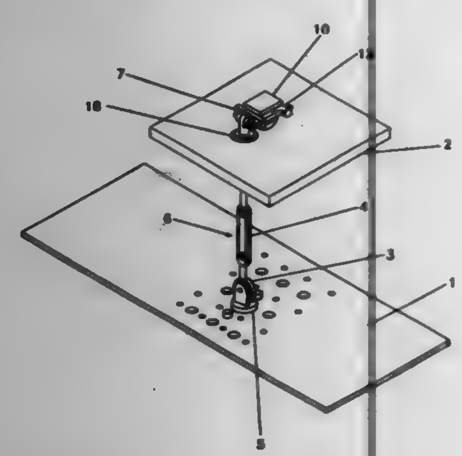

1. An aseismic support structure having a first end secured on a fixed floor and a second end connected to a subject structure placed on a floating floor, said aseismic support structure comprising:
first means having a first universal joint at its first end and a second universal joint at its second, said first and second universal joints allowing the first means to rotate horizontally around an axis perpendicular to said fixed floor and to rotate vertically around a axis parallel to said fixed floor;
second means connected to said first universal joint by said second universal joint at one end, and having a third universal joint at another end, said second means position horizontal to said fixed floor and being constrained to said floating floor; and
mounting means connected to said second means through said third universal joint, said subject structure being secured on said mounting means.

5,702,088
WINCH HANDLE
Paul Roberge, 281 Asby Rd., Ashburnham, Mass. 01430
Filed Oct. 24, 1995, Ser. No. 547,569
Int. Cl.[6] B66D *1/00*
U.S. Cl. 254—266 **4 Claims**

2. A device for attaching a ship's wheel to a halyard winch, said halyard winch having a socket, said device comprising:
a body having a first end and a second end,
said body having a plurality of spaced splines on said first end and an externally threaded portion adjacent said second end,
locking means for locking said body into said socket,
said body having a portion between said first and second ends, adapted to receive a ship's wheel, and

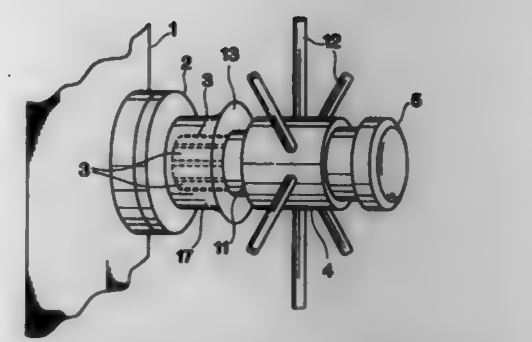

means cooperating with said externally threaded portion for holding a ship's wheel on said body.

5,702,089
LIFT JACK FOR WHEELED VEHICLE
Frederick E. Hurd, Toronto, Canada, assignor to Innovation Plus Limited, Nassau, Bahamas
Filed Mar. 6, 1996, Ser. No. 611,572
Int. Cl.[6] B66F *7/22*
U.S. Cl. 254—422 **16 Claims**

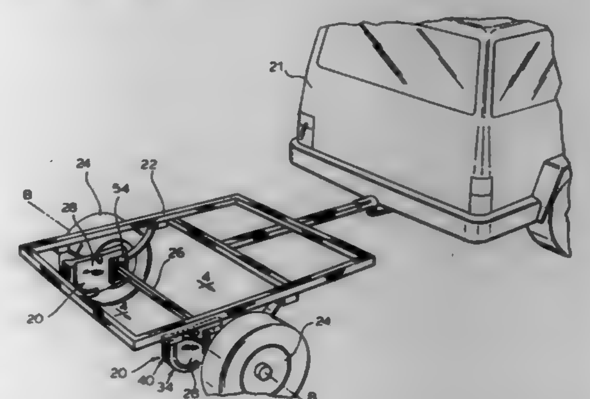

1. A lift jack for use with a vehicle having a structural member positioned on the underside of the vehicle so as to define a transverse rotational axis, said lift jack comprising:
an elongated body member having a longitudinal axis, a top end portion adjacent one end of said longitudinal axis, said top end portion having a concave arcuate surface radially aligned with said longitudinal axis and wherein the arc of said concave arcuate surface defines a central axis coalignable with said rotational axis, and a bottom end portion adjacent the opposite other end of said longitudinal axis, the longitudinal axial length of said elongated body member being greater than the height of said transverse rotational axis above the ground;
said bottom end portion having a radiused lifting surface extending along a first lateral edge of said bottom end portion displaced laterally to one side of said longitudinal axis, the origin of the radius of said radiused lifting surface being positioned on said longitudinal axis, said bottom end portion also having a generally planar foot portion intersecting and oriented substantially transverse to said longitudinal axis and extending contiguously from said radiused lifting surface, in substantially inwardly, tangential relation to said radiused lifting surface toward a second lateral edge of said bottom end portion displaced laterally to the opposite other lateral side of said longitudinal axis; and,
means attached to said top end portion for mounting the elongated body member on the vehicle, said means comprising an annular split section adaptor coupling fitted around said structural member in encircling fixed relation, said split section

adaptor coupling having an outer perimeter defining a circumferential bearing surface centred upon said transverse rotational axis, said circumferential bearing surface being dimensioned for fitment within said concave arcuate surface of said top end portion in close-fitting frictional contact therewith to facilitate sequential rotational movement of said elongated body portion around said transverse rotational axis from a stored position wherein the bottom end portion is lifted clear of the ground, through an initial deployed position wherein the radiused lifting surface is in contact with the ground, to a fully deployed position wherein said foot portion is in contact with the ground and the longitudinal axis of the elongated body member is substantially aligned with the true vertical direction, so as to lift the vehicle above the ground.

5,702,090
SNAP TOGETHER PLASTIC FENCE
Thomas J. Edgman, Farmers Branch, Tex., assignor to Vinylex Corporation, Knoxville, Tenn.
Continuation of Ser. No. 511,728, Aug. 7, 1995, abandoned. This application Jan. 9, 1997, Ser. No. 781,523
Int. Cl.[6] E04H *17/14*
U.S. Cl. 256—19 **9 Claims**

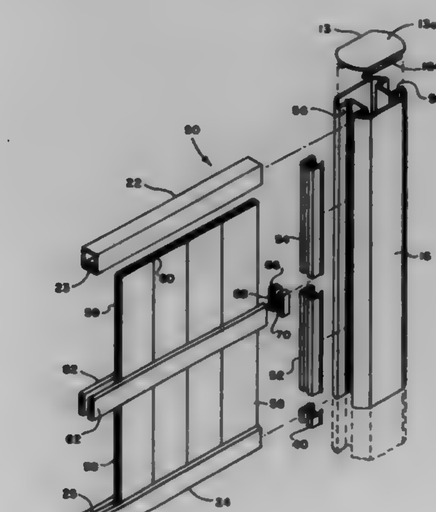

1. An exterior fence assembly for use in determining the boundaries of a parcel of land or for forming a residential privacy fence comprising:
a plurality of spaced apart, generally vertically extending post members, each of said post members being formed of an extrudable plastic and having a perimeter wall defining an interior space,
an elongated channel formed in said perimeter wall and extending over at least a portion of the length of said post member;
a spacer member insertable in said channel, said spacer member being formed of extruded plastic and comprising spaced apart, generally parallel extending tines, wall means intermediate said tines and defining a slot for receiving a side edge of a fence picket, said wall means defining said channel and said tines of said spacer member including cooperating projection and recess means for releasably locking said spacer member in said channel;
plural, side by side, elongated generally horizontally extending intermediate rail means having respective opposed ends; and
support bracket means disposable in said channel of each of adjacent ones of said post members, said support bracket means including opposed spaced apart slots for receiving respective ends of said intermediate rail means extending between adjacent ones of said post members, respectively.

5,702,091
GAS SPRING
Etienne Perrin, Pirey, and Dominique Douy, Braillans, both of France, assignors to Draftex Industries Limited, Edinburgh, Scotland
Filed Jul. 11, 1996, Ser. No. 680,228
Claims priority, application United Kingdom, Jul. 13, 1995, 9514328
Int. Cl.[6] F16F *9/02;9/32*
U.S. Cl. 267—64.12 **18 Claims**

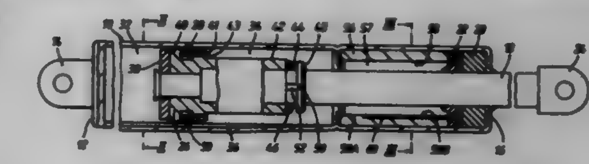

1. A gas compression spring for moving a member relative to a body from a first position corresponding to compression of the spring to a second position, comprising
a piston-cylinder arrangement with a piston rod slidingly and sealingly extending outwardly of a first one of the two ends of the cylinder and terminating in a distal end outside the cylinder;
the distal end of the piston rod and the second one of the ends of the cylinder being opted for connection between the body and the member;
the interior of the cylinder being filled with gas under pressure;
piston means carried by the piston rod and slidable within the cylinder;
first gas flow means providing a restrictive gas flow path permitting limited flow of gas from one side of the piston means to the other as the gas pressure exerted on the piston rod moves the piston rod from an piston rod position towards an outer piston rod position more outwardly from the cylinder, whereby to move the member towards the second position;
gas flow blocking means operated by the piston means when the piston rod has reached an intermediate position between the inner and outer piston rod positions to cause a block in the said gas flow path and thereby to cause a pressure build-up halting movement of the piston rod at the intermediate position;
second gas flow means operative when a change in an external force applied to the piston rod has caused the piston rod to move further outwardly of the cylinder to unblock the said gas flow path whereby to allow the piston rod to move into the said outer piston rod position;
the piston means comprising first and second pistons, the first piston dividing the interior of the cylinder into a first chamber closed by the head of the first piston and a second chamber through which the piston rod extends and in which the second piston is positioned;
means defining a third chamber in which the second piston reaches a predetermined position when the piston rod has reached the intermediate position;
the first gas flow means including first interconnection means interconnecting the third chamber and the second chamber and second interconnection means interconnecting the second and first chambers;
the gas flow blocking means comprising sealing means carried by the second piston to form a gas-tight seal which seals off the third chamber from the second chamber when the second piston reaches the predetermined position within the third chamber thereby blocking the passage of gas through the first interconnection means, whereby to produce the said pressure build-up in the third chamber and thus a corresponding force opposing the force which is produced by the gas pressure in the first and second chambers and which tends to move the piston rod to the outer piston rod position;
the third chamber having an open end comprising the first interconnection means and into and through which the piston rod extends, the third chamber having a first interior wall surface portion against which the sealing means makes gas-tight sealing contact when the second piston is in the said

predetermined position, the third chamber having a second interior wall surface portion which is spaced beyond the said predetermined position in the direction towards the first end of the cylinder, the second wall surface portion defining the said second gas flow means which provides a gas flow path by-passing the sealing means when the second piston has moved further into the third chamber beyond the predetermined position; and

pressure release means carried by the second piston and operative when the piston rod is moving inwardly of the cylinder from the outer piston rod position under the application of an externally applied force to provide a by-pass flow path by-passing the sealing means when the second piston moves into the predetermined position, whereby to prevent pressure build-up opposing such movement.

5,702,092

SUSPENSION ASSEMBLY FOR A VEHICLE

Mark S. Farris; Michael A. Harrison, both of Ketchum, Id.; John M. Loftus, Costa Mesa, Calif.; Aaron K. Taylor, Hailey, Id.; Christoph E. Mack, Georgetown, and Ross P. Collins, Norwalk, both of Conn., assignors to Cannondale Corporation, Georgetown, Conn.

Division of Ser. No. 37,949, Mar. 26, 1993, Pat. No. 5,494,302, which is a continuation-in-part of Ser. No. 713,673, Jun. 11, 1991, Pat. No. 5,320,374. This application Jan. 11, 1996, Ser. No. 584,922

Int. Cl.^{6} F16F *9/14*

U.S. Cl. 267—64.15 **22 Claims**

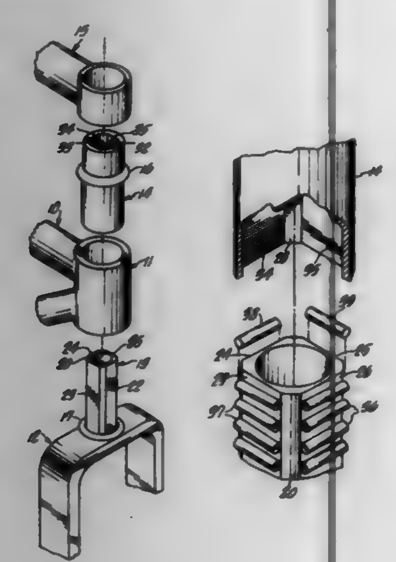

1. A suspension fork assembly for a steerable wheel, comprising an elongated inner tube;

an elongated outer tube coaxially mounted together with said inner tube, said inner tube and said outer tube being adapted to telescope with respect to each other;

a self-contained cartridge type shock absorber disposed in the inner and outer tubes such that the shock absorber is removable as a unit, the shock absorber having a first end attached to the inner tube and a second end attached to the outer tube.

5,702,093

SHOCK ABSORBING DEVICE FOR A BICYCLE SEAT

Chi-chao Liao, No. 5, Lane 2, Tungyang Rd., Fengyuan City, Taichung Hsien, Taiwan

Filed Nov. 5, 1996, Ser. No. 746,004

Int. Cl.^{6} F16F *1/00*

U.S. Cl. 267—132 **6 Claims**

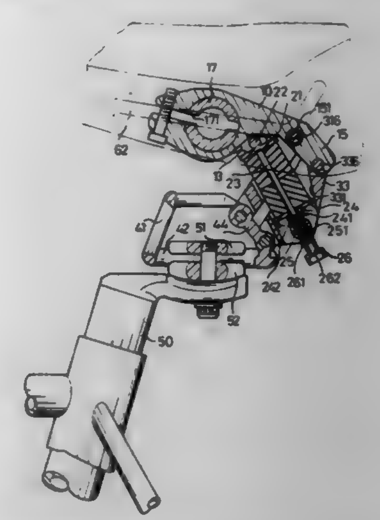

1. A shock absorbing device comprising:

a base frame having first side portion and a second side portion;

a bracket having a lower portion pivotally engaged with the second side portion of said base frame and an upper portion, said bracket having a space defined therein;

a supporting base having a first end portion, a mediate portion and a second end portion pivotally engaged with the upper portion of said bracket;

a shock absorbing block received in said space of said bracket and having an upper portion abutting on an underside of the mediate portion of said supporting base; and

an auxiliary bracket mounted between said supporting base and said bracket, said auxiliary bracket having an upper portion pivotally engaged with the second end portion of said supporting base, a lower portion pivotally engaged with the second side portion of said base frame and an opening defined in said auxiliary bracket for receiving said shock absorbing block.

5,702,094

FLUID DAMPED BUSHING WITH ENCAPSULATED WINDOW METAL

Douglas M. McLelland; Paul T. Wolfe, both of Fort Wayne, and Richard D. Hein, Wabash, all of Ind., assignors to BTR Antivibration Systems, Inc., Ft. Wayne, Ind.

Continuation-in-part of Ser. No. 289,027, Aug. 10, 1994, Pat. No. 5,496,018. This application Feb. 5, 1996, Ser. No. 597,054

Int. Cl.^{6} F16F *5/00*

U.S. Cl. 267—140.12 **10 Claims**

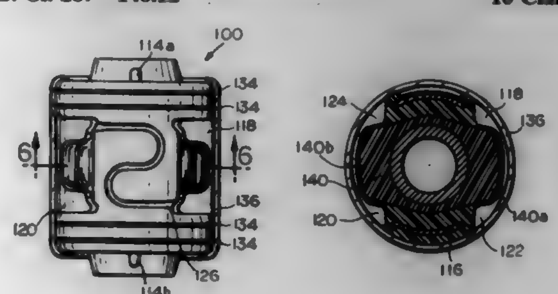

1. A fluid damped bushing comprising:

a rigid cylindrical member;

an annular elastomeric member having an inner surface, said elastomeric member engaging an outer surface of said rigid cylindrical member in surface to surface contact, said annular elastomeric member further having first and second circumferentially spaced apart recesses in an outer, generally cylindrical surface thereof;

an inertia track passage formed in an outer surface of said annular elastomeric member, said inertia track passage providing restricted fluid communication between said first and second circumferentially spaced apart recesses;

window metal means encapsulated in said annular elastomeric member, said window metal means comprising first and second rings longitudinally spaced apart at locations external to said first and second circumferentially spaced apart recesses;

an outermost sleeve circumscribing said elastomeric member, said outermost sleeve sealing a damping fluid contained in said first and second circumferentially spaced apart recesses; and

a substantially incompressible damping fluid contained in said circumferentially spaced apart recesses, said damping fluid being added by immersing a subassembly comprising said annular elastomeric member and said window metal means in damping fluid and then pressing the subassembly into said outermost sleeve;

a generally elliptical, rigid polymeric collar affixed to a central portion of said rigid cylindrical member, said collar being encapsulated within said annular elastomeric member and having;

a first diametrically opposed pair of lobes extending radially outwardly from said cylindrical member for a first distance; and

a second diametrically opposed pair of lobes extending radially outwardly from said cylindrical member for a second distance, said lobes of said second pair of lobes being interleaved with the lobes of said first pair of lobes, said second distance being less than said first distance;

said first pair of lobes being circumferentially aligned with said first and second circumferentially spaced apart recesses and serving to limit the radial deflection of said bushing beyond a predetermined amount of radial deflection.

5,702,095

TRUSS TABLE WITH INTEGRATED POSITIONING STOPS

Thomas H. Williams, Edenton, N.C., assignor to Tee-Lok Corporation, Edenton, N.C.

Filed Nov. 2, 1995, Ser. No. 552,283

Int. Cl.^{6} B30B *3/02*

U.S. Cl. 269—37 **24 Claims**

1. A table for forming trusses, comprising:

a support frame;

first and second substantially horizontally-disposed elongate steel panels, each of said panels being at least ¼ inch in thickness and having an upper surface, a lower surface, and opposing lateral edge portions, said panels being positioned so that their respective upper surfaces are substantially coplanar and so that a first of said lateral edge portions of said first panel is in adjacent, non-contacting relationship with a first of said lateral edge portions of said second panel to form a gap therebetween;

a first channel having a generally horizontal floor and opposed side walls extending upwardly therefrom, one of said side walls supporting the lower surface of said first panel, and the other of said side walls supporting said second panel, said floor being supported by said frame and positioned beneath said gap so of said second panel overhang said floor; and

a locator stop which includes s stop portion that resides above said panel upper surface, a slide portion that resides below said panel lower surface and that slides within said channel, and means for clamping said panels between said stop portion and said slide portion to prevent relative movement therebetween, said clamping means extending within said gap;

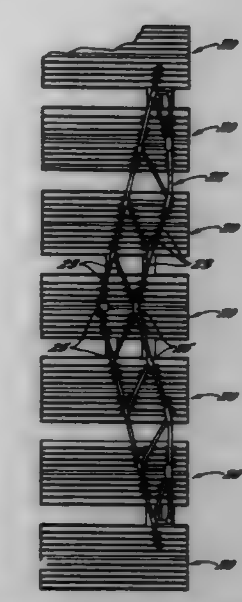

wherein said first channel further comprises positioning indicia located therewithin, and wherein said locator stop further comprises indicator means for indicating the relative position of said stop portion to said first channel.

5,702,096

PALLET WITH MULTIPLE VISES

James R. Buck, 1207 SE. 10th St., Cape Coral, Fla. 33904

Continuation-in-part of Ser. No. 447,764, May 23, 1995. This application Mar. 5, 1996, Ser. No. 610,893

Int. Cl.^{6} B25B *1/10*

U.S. Cl. 269—43 **7 Claims**

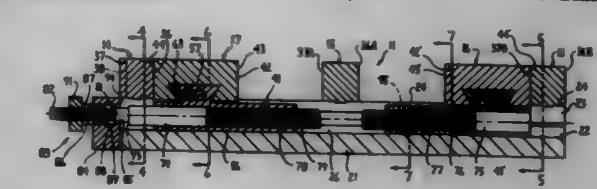

1. An apparatus for grippingly supporting a plurality of workpieces to permit machining operations to be carried out thereon, comprising:

a horizontally-enlarged support pallet defining thereon enlarged and generally parallel top and bottom surfaces, said support pallet having a height which is a small fraction of the horizontal width and length dimensions thereof;

said support pallet defining therein a plurality of horizontally elongate guide channels which open upwardly through said top surface and are disposed in generally sidewardly spaced relation;

a pair of elongate ways fixedly secured to said support pallet for association with each of said guide channels, said pair of ways being disposed on and projecting upwardly from said upper surface and being positioned on opposite sides of and extending generally parallel with the respective channel, said pair of ways being positioned so as to partially overlap said channel so that said channel and the pair of spaced ways cooperate to define a horizontally elongated inverted T-shaped guide passage;

a plurality of vise arrangements mounted on said support pallet, each said vise arrangement cooperating with a respective one of said inverted T-shaped guide passages;

said vise arrangement including at least first and second jaws which are disposed in longitudinally spaced relation along the respective guide passage, at least one of said jaws including a bottom jaw member which is of generally inverted T-shaped configuration and is slidably positioned for longitudinal dis-

placement within the respective inverted T-shaped guide passage, and a top jaw member extending transversely across said guide passage and being slidably supported on said ways, said top jaw member being releasably mounted on said bottom jaw member; and

each said vise arrangement including an actuator assembly for effecting movement of said movable jaw longitudinally along said ways, said actuator assembly including an elongate and rotatable actuator shaft extending longitudinally along said guide passage, said actuator shaft projecting downwardly at least partially into the respective guide channel, said actuator shaft having a rotatable threaded engagement with the bottom of one or both jaw members, and actuator shaft having an end part which permits engagement with a suitable tool for effecting rotation of the actuator shaft.

5,702,097
INSERT FEED MECHANISM
Andrew G. Bakoledis, Chester, Conn., assignor to GBR Systems Corporation, Chester, Conn.
Filed Aug. 28, 1996, Ser. No. 702,987
Int. Cl.⁶ B65H *39/02*
U.S. Cl. 270—58.06 **15 Claims**

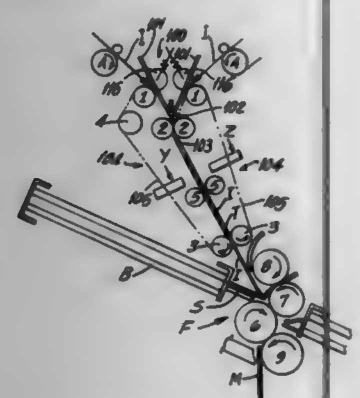

1. An insert feed mechanism comprising means for feeding an insert, a folding assembly, conveying means for transporting the insert from the feeding means to the folding assembly, means for supplying the folding assembly with an envelope sheet, said conveying means adapted to direct the insert to strike the envelope sheet at a predetermined place on the envelope sheet where the first fold is to occur, said folding mechanism being adapted to fold the envelope sheet around the insert to form a mailing envelope.

5,702,098
ENVELOPE CLOSING AND SEALING APPARATUS
Robert K. Gottlieb, Milford, Conn.; Richard A. Grossman, Cicero, Ill.; Michael R. Ifkovits, Danbury, and Philip G. Ruess, Norwalk, both of Conn., assignors to Pitney Bowes Inc., Stamford, Conn.
Filed Oct. 18, 1996, Ser. No. 733,383
Int. Cl.⁶ B65H *39/02*
U.S. Cl. 270—58.06 **6 Claims**

1. Apparatus for closing and sealing the flaps of envelopes that have passed through an inserting machine in which collations of insert material have been inserted into the envelopes, and for detecting whether or not certain envelopes cannot be properly closed and sealed and for separating such envelopes from those that are properly closed and sealed, said apparatus comprising

A. means defining a feed path along which envelopes are fed into said flap closing and sealing apparatus from an inserting machine,

B. means for feeding envelopes along said feed path with the flaps thereof lying in the plane of said envelopes in an extended positon beyond the crease line of the envelopes,

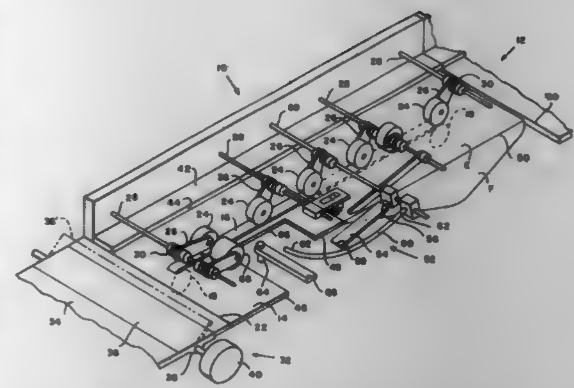

C. means disposed in said feed path for normally turning said flaps through approximately 180° along said crease line to substantially close said flaps against said rear surface of said envelopes, and for maintaining said flaps in said extended position if said flaps encounter any resistance to being turned freely about said crease line,

D. detecting means disposed in said feed path in position to detect the presence of an envelope with said flap having been maintained in said extended position, and

E. means responsive to operation of said detecting means detecting an envelope with said flap lying in said extended position for ejecting such envelope from said feed path,

whereby envelopes with improperly closed flaps are ejected from said feed path and are accessible for manual retrieval without otherwise affecting the operation of the envelope closing and sealing apparatus.

5,702,099
ARRANGEMENT FOR SEPARATING FLAT STACKED OBJECTS
Uwe Köhn, Osnabrück, Germany, assignor to Windmöller & Hölscher, Lengerich/Westf., Germany
Filed Jul. 9, 1996, Ser. No. 677,308
Claims priority, application Germany, Jul. 11, 1995, 195 25 236.5; Oct. 26, 1995, 195 39 933.1
Int. Cl.⁶ B65H *3/08*
U.S. Cl. 271—101 **6 Claims**

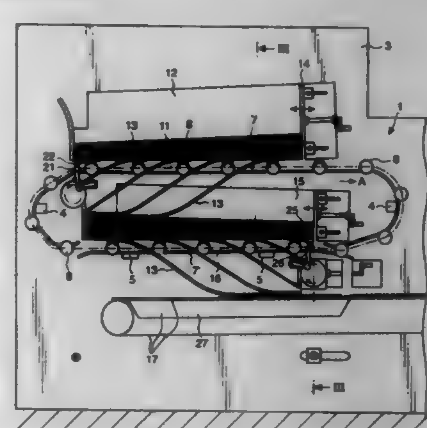

1. An arrangement for separating flat tubular pieces to be processed into bags comprising:

a stacking hopper having a base which supports a stack of the tubular pieces and is composed of rolls which pass through the hopper at intervals and roll against a respective bottommost workpiece, the rolls defining a series of rolls traveling on upper and lower belts, the rolls of which are driven in a rotating manner,

a conveyor belt for transporting material away arranged below the series of rolls, the respective bottommost workpiece being

placed onto the conveyor belt when successively peeled off the stack by each roll passage, and

suction boxes which, in sync with passage of the rolls, grip and pull down a lateral edge of the respective bottommost workpiece between two rolls in such a way that a roll arriving below the stack still supports the stack through the respective bottommost workpiece and the subsequent roll passes between the respective bottommost workpiece and a workpiece located above the respective bottommost workpiece, causing a reliable separation of the respective bottommost workpiece from the stack,

characterized in that the stacking hopper is arranged between said upper and said lower belt of the series of rolls so that the lower belt forms the base which supports the stack and the conveyor belt for transporting material away is arranged in parallel with the lower belt of the series of rolls and transports the workpieces away from the series of rolls.

5,702,100
MECHANISM FOR DIVERTING SIGNATURES BY THE ROTATION OF SURFACES
Michael Alexander Novick, New Durham, and Roger Robert Belanger, Dover, both of N.H., assignors to Heidelberg Harris, Dover, N.H., and Heidelberger Druckmaschinen AG, Heidelberg, Germany
Filed Mar. 25, 1996, Ser. No. 620,827
Int. Cl.⁶ B65H *39/10*
U.S. Cl. 271—302 **20 Claims**

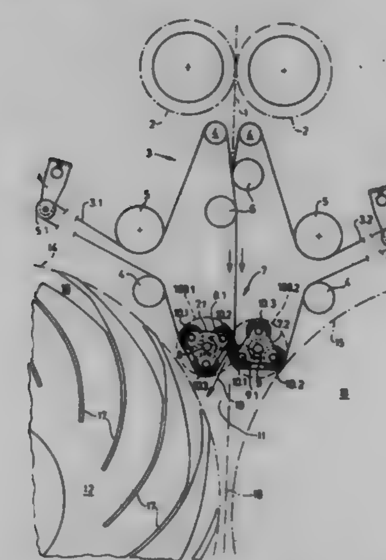

1. A diverter mechanism for signatures in a folding apparatus comprising:

a first high-speed tape and a second high-speed tape, wherein adjacent portions of the first and second high-speed tapes form a signature conveying path for conveying the signatures toward a delivery station;

a first rotating diverting element adjacent to the first high-speed tape and a second rotating diverting element adjacent to the second high-speed tape, each of the first and second diverting elements having at least two guiding surfaces mounted thereto, wherein each of the guiding surfaces is mounted for rotation about a respective guiding surface axis, and wherein each of the guiding surface axes are separated from one another,

wherein an orientation of the guiding surfaces of the first diverting element relative to an orientation of the guiding surfaces of the second diverting element defines a portion of the signature conveying path to control delivery of the signatures to a desired location within the delivery station.

5,702,101
HANDHELD GAMING BALL DISPLAY DEVICE
Douglas R. Russell, 2502 Woodside Dr., Louisville, Ky. 40207
Filed Dec. 30, 1996, Ser. No. 781,904
Int. Cl.⁶ A63F *3/06*
U.S. Cl. 273—144 B **9 Claims**

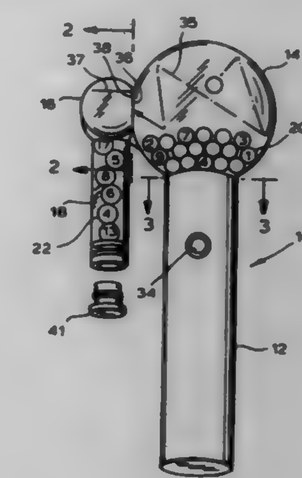

1. A handheld character selector and display device for the agitation, random selection and display of spherical objects bearing characters thereon, said device comprising:

(A) a main housing having disposed therein for random mixing through agitation a plurality of spherical objects bearing characters thereon;

(B) a sub-housing substantially smaller in volume than said main housing and in communication with said main housing for receiving from said main housing for kinetic energy dissipation a sub-plurality of said spherical objects;

(C) a transparent identification chute substantially smaller in diameter than said sub-housing and in communication with said sub-housing for receiving from said sub-housing and displaying in alignment a predetermined number of said spherical objects; and

(D) agitation means for agitating said spherical objects in said main housing and propelling a sub-plurality thereof into said sub-housing so that said predetermined number of said spherical objects are eventually received in said chute, all within predetermined time constraints;

said sub-housing being configured and dimensioned to allow said predetermined number of said spherical objects to be received therefrom by said chute even while and if said agitation means is continuously agitating and propelling.

5,702,102
SCORE BOARD FOR DART GAME
Philip R. Ballard, 26 Hamlet St., Springfield, Mass. 01104
Filed Aug. 2, 1995, Ser. No. 510,200
Int. Cl.⁶ A63B *9/00;* **G09F** *9/00;* **G06C** *27/00*
U.S. Cl. 273—148 R **5 Claims**

1. A score board for dart games utilizing a dart board having a plurality of predetermined regions thereon, the score board comprising:

(a) housing having a back and a pair of outer counterfacing sides disposed vertically the outer counterfacing sides extending outwardly from the back and defining therebetween a hollow space;

(b) a partition region disposed vertically between each of the counterfacing sides and defining, thereby, within the hollow space a pair of vertically oriented channels, each having one of the counterfacing sides as an outer wall;

(c) plurality of substantially horizontally oriented rods located between each of the counterfacing sides and the partition region, the rods being seated within each of channels;

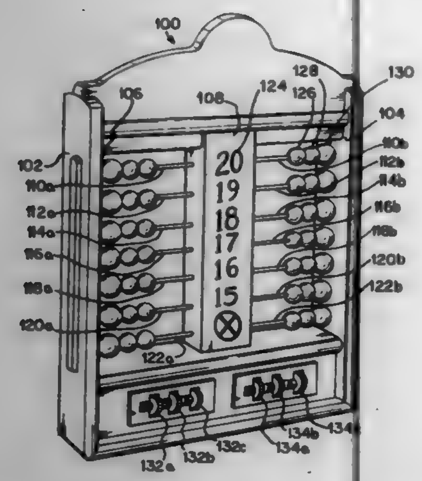

(d) indicia markings located respectively adjacent each of the rods, the indicia markings being indicative of each of the predetermined regions;

(e) a plurality of tokens located on each of the rods, the tokens being moveable between a position adjacent to one of the counterfacing walls, and a position adjacent the partition region to thereby, indicate a status of the predetermined region, each of the tokens being at least completely disposed within the channel with the counterfacing side extending outwardly from the back beyond the tokens; and

(f) a pair of adjustable point-score-keeping elements each located with respect to each of the channels, wherein each of the point-scored-keeping elements is located below a respective of the channels on a portion of the housing within the counterfacing sides, each of the point score keeping elements including a moveable indicia assembly thereon, constructed and arranged to be adjustable to set a predetermined score thereon.

5,702,103
GAME BOARD HAVING MECHANICAL CHARACTERS
Sybil Salley, P.O. Box 452, Pinehurst, Tex. 77362
Filed Oct. 10, 1995, Ser. No. 541,831
Int. Cl.[6] A63F *3/00*
U.S. Cl. 273—243 **31 Claims**

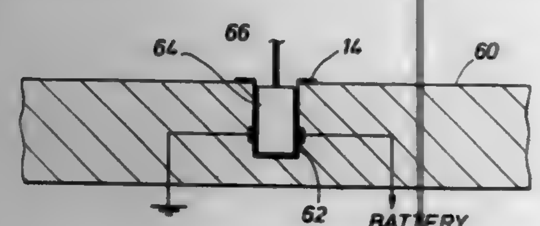

1. A game comprising:
(a) a board having a top located game playing surface;
(b) one or more game playing paths comprising left and right walls defining an elongate even width receptacle on said game playing surface wherein said path has
(i) a start position;
(ii) an end position; and
(iii) an intermediate portion connecting to said start and end positions with said elongate receptacle therebetween;
(c) a talisman for use by a player to move along said playing path and having
(i) a base suitable to rest on said path between said left and right walls;
(ii) a lamp; and
(iii) means to illuminate said lamp; and

(d) a chance determined talisman move generator operated by a player to control talisman movement.

5,702,104
METHOD AND APPARATUS FOR PLAYING MIXTURE OF TWENTY-ONE AND BACCARAT USING THREE, FOUR OR FIVE PLAYER CARDS
Mehrdad M. Malek, 1306 Daviswood Dr., McLean, Va. 22102; Thomas P. Kadlic, and Frank D. Borsenik, both of Las Vegas, Nev., assignors to Mehrdad M. Malek, McLean, Va.
Filed Sep. 25, 1996, Ser. No. 720,173
Int. Cl.[6] A63F *1/00*
U.S. Cl. 273—292 **19 Claims**

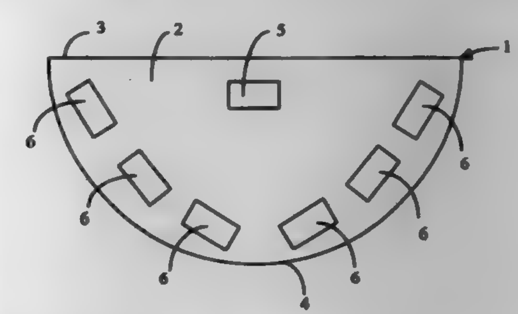

1. A method of playing a mixture of Twenty-one and Baccarat against a dealer, comprising:
dealing three cards, P1, P2 and P3, face-up to at least one player;
dealing a first set of two cards, D1 and D2, to the dealer, the D1 card face-up and the D2 card face-down;
dealing a second set of two cards, D3 and D4, to the dealer, both face down;
offering a fourth card, P4, to the player;
turning the D2 card face-up and completing the dealer's Twenty-one hand using at least the D1 and D2 cards;
offering a fifth card, P5, to the player;
turning the D3 and D4 cards face-up and completing the dealer's Baccarat hand using at least the D3 and D4 cards; and
comparing the summed total of the cards in the dealer's Twenty-one hand to the summed total of the player's P1 and P3 cards or P1, P3 and P4 cards; and
comparing the summed total of the cards in the dealer's Baccarat hand to the summed total of the player's P2 and P3 cards or P2, P3 and P5 cards.

5,702,105
THREE-DIMENSIONAL WORD CONSTRUCTION GAME OF SCRABBLE
Kevin L. Glikmann, 16607 Calneva Dr., Encino, Calif. 91436
Continuation-in-part of Ser. No. 299,579, Sep. 1, 1994. This application Feb. 15, 1996, Ser. No. 599,555
Int. Cl.[6] A63F *3/00*
U.S. Cl. 273—272 **3 Claims**

1. A three-dimensional word construction game comprising:
a. a plurality of three-dimensional game pieces with a pair of indicia wherein said indicia are letters which are used in said three dimensional word construction game to form words and numbers which represent various point values for scoring each of said words;
b. a plurality of premium connectors each of which connects at least one of said three-dimensional game pieces to another of said three-dimensional game pieces along any one of three orthogonal axes and each of which represents an integral multiplier for scoring one of said words in the same manner as the premium squares on a playing board for a two-dimensional word construction game of SCRABBLE whereby each player competes for a high score by using letters in

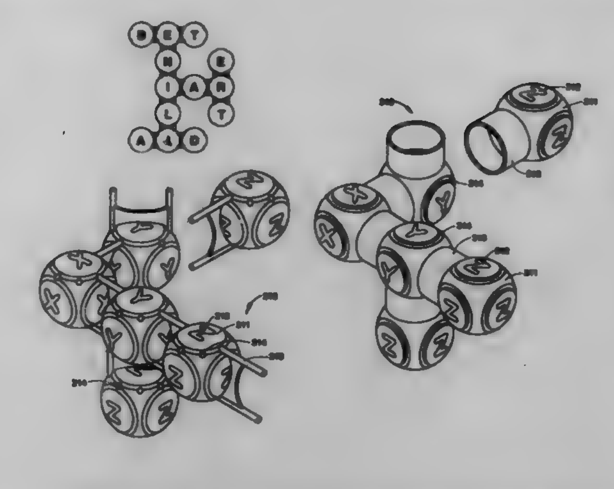

combinations and locations that best exploit said point values of said three-dimensional game pieces and said premium connectors; and
c. color-coding means coupled to each of said premium connectors for color-coding said premium connector in order to indicate the value of its said integral multiplier.

5,702,106
METHOD OF PLAYING A CASINO TYPE CARD GAME
Manuel M. Alvarez, Jr., 4611 Ellenwood Dr., Los Angeles, Calif. 90041
Filed Jul. 15, 1996, Ser. No. 680,364
Int. Cl.[6] A63F *1/00*
U.S. Cl. 273—292 **24 Claims**

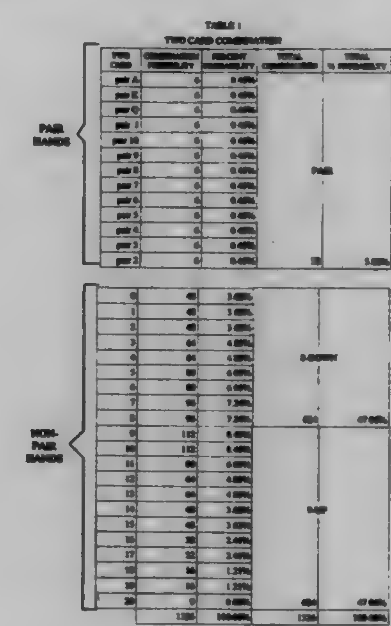

24. A method for playing a card game comprising the steps of providing one or more decks of 52 playing cards, dealing a two card hand to a player, said player making an election on the sum value of said two-card hand being either nine-up or eight-down, said player placing a wager on said election, and determining said sum value by adding the numerical face value of the two cards in any non-pair said hand, wherein all figure cards have a zero face value, nine-up being a sum value of said non-pair card hand of nine to nineteen and eight-down being a sum value of said non-pair card hand of zero to eight.

5,702,107
TOY VEHICLE GAME AND METHODS OF PLAYING THE GAME
Joseph R. Novak, Box 15, (Stone Church) Rd., Merrittstown, Pa. 15463
Filed Jan. 14, 1997, Ser. No. 782,252
Int. Cl.[6] A63B *67/00;* **A63H** *17/02*
U.S. Cl. 273—442 **18 Claims**

1. A method of playing a game have a plurality of toy vehicles each having a motor, comprising the steps of:
providing a plurality of targets at spaced locations on each vehicle;
for each vehicle, providing a plurality of normally closed switches connecting a source of power for driving the vehicle and the motor of the vehicle;
coupling said switches and said targets to one another on each vehicle such that the switches are individually opened in response to an impact on a target of the vehicle; and
moving at least one vehicle to impact all of the targets of another vehicle to open all of the switches of said another vehicle, thereby deactivating the motor thereof and stopping said another vehicle.

5,702,108
GAME BOARD
Masatoshi Todokoro, Tokyo-To, Japan, assignor to Agatsuma Co., Ltd., Tokyo-to, Japan
Filed Nov. 22, 1996, Ser. No. 753,337
Int. Cl.[6] A63F *9/00*
U.S. Cl. 273—447 **8 Claims**

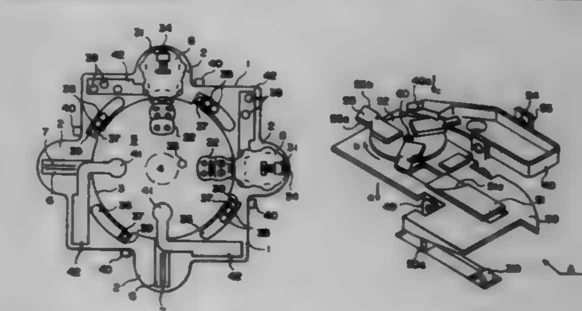

1. A game board comprising:
a table board;
a plurality of body parts made a shape of an animal's body or the like and fixedly arranged along a peripheral part of said table board;
a plurality of extrusive bodies each of which is arranged so that it may be extruded from inside a corresponding one of said body parts to a central part of said table board and formed in such a manner that a wall surface near a rear end may be continuous with an inclined surface inclining from a front end side toward a rear end side;
a plurality of pressing springs projectingly arranged so that each thereof may come into pressing contact with a part of the wall

surface of a corresponding one of said extrusive bodies within a range from a position near the front end side to a position abutting on said inclined surface during a process of each of said extrusive bodies being extruded;

a plurality of hollow catching bodies each of which is made in a shape of an animal's head pivotally mounted on the front end of a corresponding one of said extrusive bodies and has an open bottom part contacting a wall surface of said table board;

a plurality of driving plates each of which is put in a loose-fit so as to be reciprocatingly shiftable between the front end side and the rear end side of a corresponding one of said extrusive bodies;

a plurality of projections each of which works so as to push up a corresponding one of said catching bodies from said table board when a corresponding one of said driving plates is shifted from the rear end side to the front end side of said corresponding one of said extrusive bodies;

a plurality of levers each of which, one end thereof engaging with a corresponding one of said driving plates and the other end thereof projecting outside of a corresponding one of said body parts, works so that an end engaging with said corresponding one of said driving plates may push, via each of said driving plates, each of said extrusive bodies out of each of said body parts when said projecting end is pulled;

a plurality of springs each of which energizes a corresponding one of said levers so that an end of said corresponding lever engaging with a corresponding one of said driving plates may draw, via each of said driving plates, a corresponding one of said extrusive bodies up to an original position when said projecting end of each of said levers is released;

booty forwarding levers which forward booties to be caught by said catching bodies into said table board when said levers are operated; and interlocking means disposed between each of said levers and said booty forwarding levers, each interlocking means causes a corresponding one of said booty forwarding levers to be driven once every time a corresponding one of said levers is operated a plurality of times.

5,702,109
EXPANDABLE HIGH-PRESSURE FLEXIBLE-TUBE DEVICE
Daniel Mahin, Savonnieres, and Philippe Blin, Monts, both of France, assignors to Hutchinson, France
PCT No. PCT/FR94/00732, § 371 Date Dec. 13, 1995, § 102(e) Date Dec. 13, 1995, PCT Pub. No. WO95/00738, PCT Pub. Date Jan. 5, 1995
PCT Filed Jun. 17, 1994, Ser. No. 571,902
Claims priority, application France, Jun. 17, 1993, 93 07317
Int. Cl.⁶ F16J *15/46*
U.S. Cl. 277—34 **8 Claims**

1. An expandable high-pressure flexible device for sealing pip-

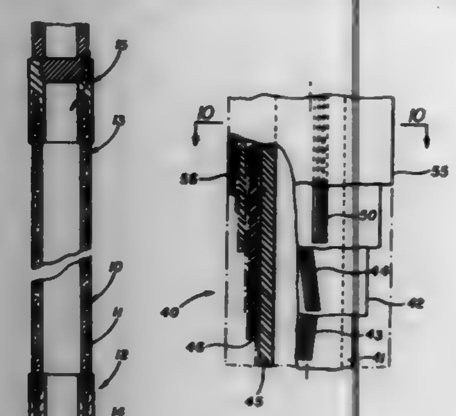

ing in gas or oil fields, the device comprising two end pieces and a tubular element interconnecting said end pieces, said tubular element having a longitudinal axis and comprising an elastomeric material and sheets of cords which are wound about said longitudinal axis at a small angle of about 10° to 15° relative to said axis and which are crossed relative to said axis, said sheets comprising strong helically wound textile cords which are mutually separated by a predetermined spacing, the said device further comprising at least one sheet having longitudinal textile cords extending over the whole length of the device, the said longitudinal cords being parallel to said axis and mutually separated by a predetermined distance, the said helical cords and the said longitudinal cords being embedded in said elastomeric material and bonded thereto.

5,702,110
FACE SEAL WITH ANGLED GROOVES AND SHALLOW ANNULAR GROOVE
Josef Sedy, Mount Prospect, Ill., assignor to Durametallic Corporation, Kalamazoo, Mich.
Continuation of Ser. No. 445,428, May 19, 1995, Pat. No. 5,556,111, which is a continuation of Ser. No. 115,153, Sep. 1, 1993, abandoned, and a continuation of Ser. No. 115,154, Sep. 1, 1993, abandoned. This application Sep. 10, 1996, Ser. No. 709,250
Int. Cl.⁶ F16J *15/34*
U.S. Cl. 277—96.1 **17 Claims**

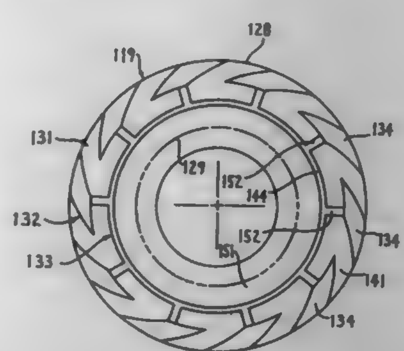

1. A fluid seal device cooperating between a housing and a rotatable shaft for creating a fluid seal between high and low pressure regions, said device comprising:

a first seal ring mounted on the shaft for rotation therewith and a second seal ring disposed adjacent the first seal ring and being non-rotatably mounted relative to the housing;

said first and second seal rings respectively defining thereon opposed first and second flat annular seal faces adapted to substantially axially abut to define an annular seal interface which extends radially between and is defined by radially spaced first and second diameters which respectively communicate with said high and low pressure regions, one of said seal rings being axially movable and normally urged axially toward the other seal ring;

a groove pattern formed in one of said seal faces and in communication with the high pressure region for causing a thin film of pressurized fluid to be interposed between said seal faces to create a small clearance therebetween;

said groove pattern including first groove means formed in said one seal face for creating a hydrodynamic fluid seal between the opposed seal faces when the first and second seal rings relatively rotate;

said groove pattern including second groove means formed in said one seal face for creating a hydrostatic fluid seal between said opposed seal faces when said first and second seal rings are stationary relative to one another;

said first groove means including a plurality of first grooves disposed in generally uniformly angularly spaced relationship around said one seal face, said first grooves being angled so as to project circumferentially and radially from said high pressure diameter toward said low pressure diameter;

said second groove means including an annular groove formed in said one seal face in radially spaced relation between said first grooves and said low pressure diameter, said annular groove communicating with inner ends of said plurality of first grooves;

said first grooves having an average longitudinally-extending depth which is greater than the depth of said annular groove, and the inner ends of said first grooves defining abrupt dam-like walls;

a plurality of communication passages disposed in angularly spaced relationship around said one seal face with each said communication passage extending radially so as to have one end thereof in communication with said annular groove and an opposite end thereof in communication with a respective one of said first grooves, each said communication passage having a transverse width as defined circumferentially in said one seal face which is a small fraction of the transverse width of said first groove as defined in said one seal face so that said communication passages function primarily to supply fluid from said first grooves to said annular groove; and

said one seal face defining thereon an annular non-grooved flat land extending radially between said low pressure diameter and said annular groove diameter.

5,702,111
SEALING APPARATUS
Henry Roy Smith, Thorney, Darbys Green, Knightwick, Worcester, England
Continuation of Ser. No. 368,962, Jan. 5, 1995, abandoned. This application Apr. 10, 1996, Ser. No. 630,207
Int. Cl.⁶ F16J *15/12*
U.S. Cl. 277—228 **15 Claims**

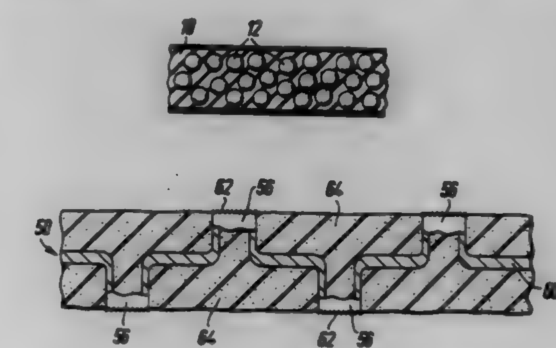

1. A sealing gasket for placement between two surfaces to provide electrical interconnection therebetween, the gasket comprising:

an electrically conductive metal sheet with front and rear surfaces and having protrusions extending generally normally away from each said surfaces, the protrusions being in the form of hollow members punched from the material of the sheet; and

a sealant consisting of a matrix of flexible material, precoated on said sheet and having embedded therein a plurality of frangible elements which are inert to the matrix material, and wherein the sealant extends over said surfaces of said sheet and into each of said hollow members;

wherein the arrangement providing that upon application of pressure to the gasket by surfaces between which the gasket is placed, the protrusions extend through the matrix material to contact and provide electrical contact between the surfaces between which the gasket is placed.

5,702,112
TOOL LOCKING APPARATUS FOR MACHINE HAMMERS
Östen Kurt Brännström, Saltsjö-Boo, and Stig Bertil Artur Fredin, Haninge, both of Sweden, assignors to Atlas Copco Berema Aktiebolag, Nacka, Sweden
PCT No. PCT/SE93/01066, § 371 Date Jun. 13, 1995, § 102(e) Date Jun. 13, 1995, PCT Pub. No. WO94/14580, PCT Pub. Date Jul. 7, 1994
PCT Filed Dec. 14, 1993, Ser. No. 454,237
Claims priority, application Sweden, Dec. 18, 1992, 9203823
Int. Cl.⁶ B25D *17/08*
U.S. Cl. 279—19 **23 Claims**

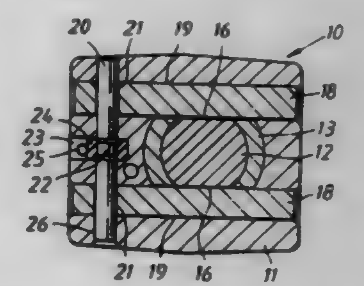

1. A tool locking apparatus for machine hammers (10) having a front head (11) with an impact delivering working tool (12) carried axially movably therein, the apparatus further comprising:

at least one wedge (18) disposed transversely in the front head (11) and insertable into form-restricted engagement with a side recess (16) in the working tool (12) in order to limit the axial movability of and lock the working tool (12) relative to the front head (11), and

a key (20) axially insertable transversely into the front head to extend across the wedge (18) and retain the wedge (18) in a position that locks the working tool (12),

wherein the key (20) is locked in the front head (11) by releasable form-bound engagement with a locking element (24) of a material having elastically form-recovering properties.

5,702,113
BRAKING DEVICE PARTICULARLY FOR SKATES
Mario Gonella, Conegliano, and Francesco Caeran, Montebelluna, both of Italy, assignors to Nordica S.p.A., Trevignano, Italy
Filed Jul. 25, 1995, Ser. No. 506,577
Claims priority, application Italy, Jul. 29, 1994, TV94A0095
Int. Cl.⁶ A63C *17/14*
U.S. Cl. 280—11.2 **12 Claims**

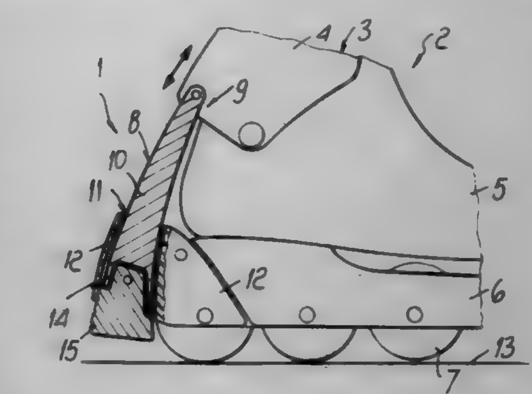

1. In a skate including a quarter articulated to a frame and a braking device arranged to engage a ground surface in response to rearward articulation of said quarter relative to said frame, the braking device comprising:

at least one rod member connected to said quarter;

a brake operatively connected to said rod member, said brake interacting with the ground surface when said quarter is rotated backwards; and

a guide mounted to the rear of and attached to and protruding from the frame, said guide defining a seat that slidingly engages said at least one rod member,

said at least one rod member having a curved shape, a first end thereof pivoted to the rear and transversely of said quarter, and a body slidingly engaging said seat,

said seat being formed axially with respect to said guide and having a slightly curved shape so as to allow, when said quarter is rotated backwards, free and guided sliding of said body downwardly towards a ground surface.

5,702,114

SHOPPING CART HAVING AN INTEGRATED DUAL CHILD SEAT

Beth M. Downing, Garland, and Jamie D. Downing, Wylie, both of Tex., assignors to Downing Investment, L.L.C., Garland, Tex.

Continuation-in-part of Ser. No. 575,907, Dec. 20, 1995, abandoned. This application Jan. 29, 1997, Ser. No. 790,515

Int. Cl.⁶ B62B *1/02;* **B62D** *39/00*

U.S. Cl. 280—47.23 **20 Claims**

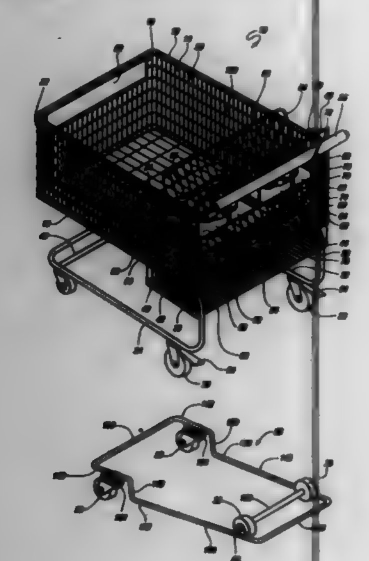

1. A shopping cart of the type having a basket with a bottom surface, a front wall, a pair of side walls and a gate pivotally mounted to serve as a rear wall movable between an operating position and a nesting position, the basket positioned above and securably attached to a frame assembly for supporting the basket the frame assembly comprising:

a pair of longitudinal frame rails having front ends generally disposed beneath the front wall of the basket and rear ends generally disposed beneath the rear wall of the basket;

a pair of transverse frame rails respectively extending between the front ends of the longitudinal frame rails and the rear ends of the longitudinal frame rails;

a pair of upwardly extending axle tabs securably disposed upon the pair of longitudinal frame rails such that one of the pair of axle tabs is proximate the front end of each of the longitudinal frame rails;

an axle extending generally between the axle tabs and above the front end of the longitudinal frame rails;

a pair of front wheels rotatably disposed on opposite ends of the axle such that the axis of rotation of the front wheels is above the front end of the longitudinal frame rails;

a pair of fully rotatable casters downwardly extending from and securably disposed beneath the pair of longitudinal frame rails such that one of the pair of fully rotatable casters is proximate the rear end of each of the longitudinal frame rails; and

a pair of rear wheels each rotatably mounted within one of the fully rotatable casters such that the axis of rotation of the rear wheels is below the rear end of the longitudinal frame rails and above the front end of the longitudinal frame rails;

whereby the weight of the frame assembly is generally below the axes of rotation of the front wheels and the rear wheels thereby providing a low center of gravity for the shopping cart and increasing the roll resistance of the shopping cart.

5,702,115

PATIENT CARE UTILITY CART

L. Frank Pool, 6319 SE. Carlton St., Portland, Oreg. 97206

Continuation of Ser. No. 371,302, Jan. 10, 1995, abandoned. This application Jan. 21, 1997, Ser. No. 786,487

Int. Cl.⁶ A47K *1/02;* **B62B** *3/00*

U.S. Cl. 280—47.35 **24 Claims**

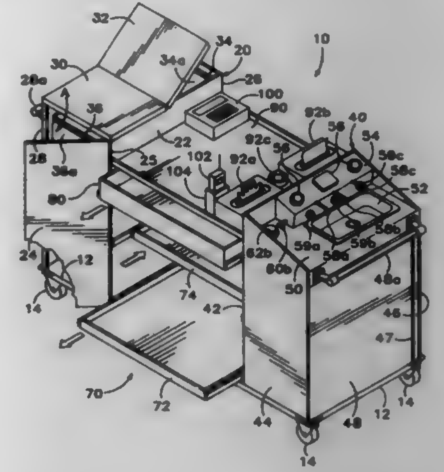

1. A utility cart for facilitating patient care and supporting patient care material comprising:

a frame mounted on a plurality of wheels;

a first vertical support member mounted to said frame, said first vertical support including first wall structure defining a first storage area for storing material;

a second vertical support member mounted to said frame, said second vertical support member being spaced from said first vertical support member and including cabinet structure defining a second storage area, a door for access to said second storage area and a top defining a substantially horizontal surface, wherein said surface includes a recess formed therein defining a sink for receiving and holding water; and

shelf structure slidably mounted to said first and said second vertical support members, said shelf structure including a first shelf that is bi-directionally extendable on either side of the cart.

5,702,116

Patent Not Issued For This Number

5,702,117

TROLLEY INTENDED FOR A MEDICAL APPARATUS AND COMPRISING WHEELS PROVIDED WITH A CABLE PUSHER

Frans E. N. Geelhoed, Eindhoven, Netherlands, assignor to U.S. Philips Corporation, New York, N.Y.

Filed Dec. 13, 1995, Ser. No. 572,218

Claims priority, application European Pat. Off., Dec. 19, 1994, 94203668

Int. Cl.⁶ B60R *19/54*

U.S. Cl. 280—160 **5 Claims**

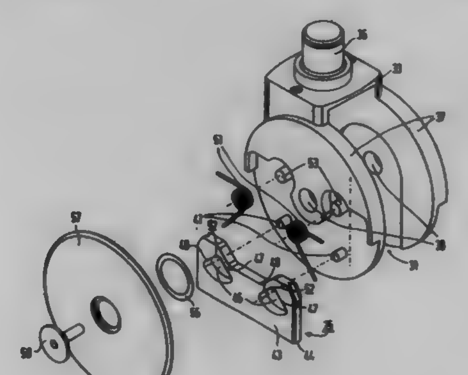

1. A trolley intended for a medical apparatus and comprising a base provided with wheels enabling displacement of the trolley on a floor surface, at least one of the wheels being provided with a cable pusher having a pushing edge situated a predetermined distance above the floor surface, characterized in that:

a) the cable pusher comprises a cut-out surface which extends perpendicularly to the shaft of the associated wheel and a boundary of which constitutes the pushing

b) in said cut-out surface there are provided cut-outs which receive a respective cam which is rigidly arranged relative to the wheel shaft, said cams being offset relative to one another, parallel to the floor surface,

c) each of said cut-outs comprises two boundaries which extend towards the floor surface,

d) the boundaries meet at the area of an equilibrium suspension point,

e) and resilient means are provided which press the cut-out surface with the cams in the equilibrium suspension points.

5,702,118

STEP BUMPER HITCH WITH INTEGRAL RECEIVER BOX

Marvin L. Hanson, Vandalia, Mich.; Richard McCoy, Granger, Ind., and Jon L. Krager, Cassopolis, Mich., assignors to Reese Products, Inc., Elkhart, Ind.

Filed Sep. 13, 1995, Ser. No. 528,387

Int. Cl.⁶ B60D *1/07*

U.S. Cl. 280—491.5 **24 Claims**

1. A step bumper hitch, comprising:

a body including a facing, a means for receiving a draw bar in said facing and a means for supporting a hitch ball;

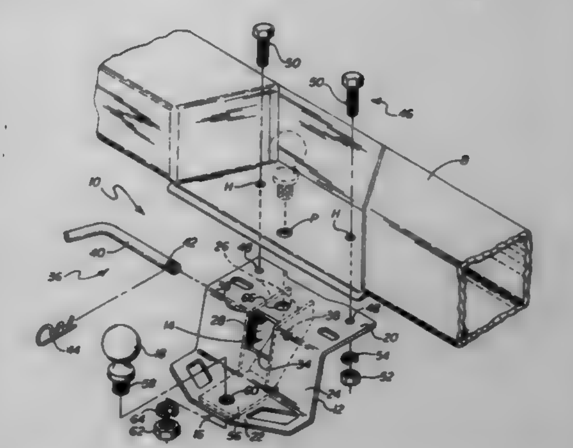

means for mounting said body to a step bumper of a vehicle; and means for securing said draw bar in said body.

5,702,119

BOOT AND RETENTION ELEMENT ASSEMBLY ADAPTED FOR SKIING

Christian Challande, Cruseilles; Pierre Desarmaux, Evires, and Pascal Thomas, Chambery, all of France, assignors to Salomon S.A., Metz-Tessy, France

Filed Jul. 13, 1995, Ser. No. 501,797

Claims priority, application France, Jul. 13, 1994, 94 08943

Int. Cl.⁶ A63C *9/085*

U.S. Cl. 280—625 **26 Claims**

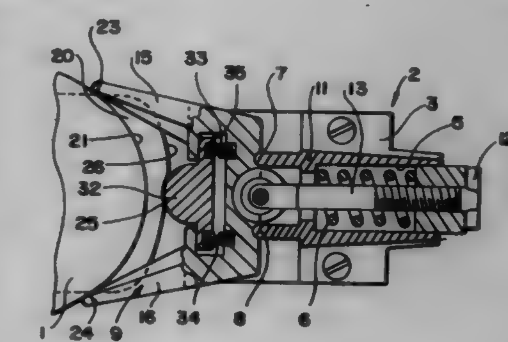

1. An assembly of a boot and a retention device for a boot on a gliding board, said assembly comprising:

a boot comprising an end having a tip extending on each side of a longitudinal vertical median plane of said boot, said tip having a local asymmetrical portion;

a retention device adapted to be affixed to the gliding board, said retention device comprising:

a retention jaw having a construction adapted to engage said tip of said boot in a retention position in alignment with a longitudinal vertical median plane of said retention device;

a return spring operatively connected to said retention jaw to bias said jaw to said retention position, said jaw being supported for movement from said retention position against a return force of said return spring in response to movement of said tip of said boot laterally in a direction toward one or the other side of said longitudinal vertical median plane of said retention device from said retention position of said jaw to a release position upon a force exerted by said tip of said boot equal to or greater than a release threshold force;

a symmetric elastic retention mechanism adapted to cooperate with said local asymmetric portion of said boot for causing said release threshold force to have an increased magnitude for release of said boot upon lateral movement in a direction toward said one side of said longitudinal vertical

median plane of said retention device with respect to a direction toward said other side of said longitudinal vertical median plane of said retention device.

5,702,120

ROLLABLE CHILD CARRIER STRUCTURE

Adam G. Malofsky, Huntington; Bernard M. Malofsky, Bloomfield, both of Conn., and Paul R. Glassberg, Chester, N.J., assignors to Piccolino, LLC, Huntington, Conn.

Filed Aug. 9, 1995, Ser. No. 501,505

Int. Cl.⁶ A63C *9/00*

U.S. Cl. 280—642 18 Claims

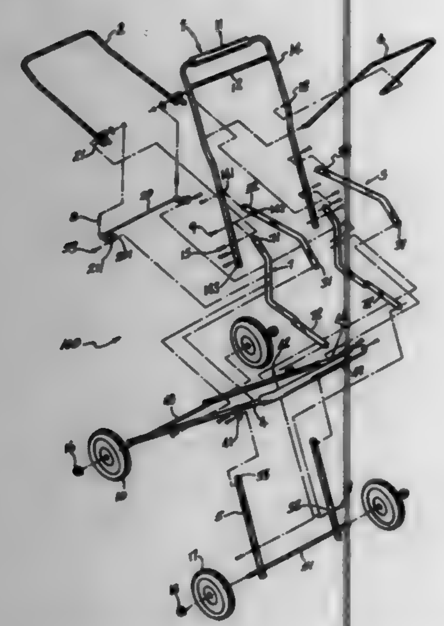

1. A rollable child carrier structure comprising a rollable base and a multi-side enclosing frame, wherein said frame comprises tubing sections made of lightweight, high modulus fiber-reinforced plastic matrix composite tubing having a weight of 0.35 pounds or less per lineal foot, a tubing diameter of 0.2 to 1.5 inches, a tubing thickness of 0.03 to 0.15 inches, a single fiber angle of 20° to 50°, and fabricated from a single tow or at least one sheet of fibers and wherein said plastic matrix is a thermoplastic resin or thermoset plastic resin with a minimum modulus of 250,000 psi; a minimum tensile strength of 6,000 psi; and a glass transition temperature of at least 50° C. and wherein said high modulus fiber reinforcement is selected from the group consisting of carbon fibers, aramid fibers, glass fibers, polyolefin fibers, boron fibers, and mixtures thereof.

5,702,121

STRUCTURE FOR CONNECTING A STABLIZER BAR AND LOWER CONTROL ARM TO EACH OTHER

Jae Myong Song, Kyungsangnam-do, Rep. of Korea, assignor to Hyundai Motor Company, Rep. of Korea

Filed May 15, 1996, Ser. No. 647,828

Claims priority, application Rep. of Korea, Dec. 15, 1995, 95-50581

Int. Cl.⁶ B60G *21/00*

U.S. Cl. 280—689 6 Claims

1. A structure for connecting a stabilizer bar and a lower control arm to each other, the structure comprising:

a connecting member for connecting the stabilizer bar and the lower control arm to each other, the connecting member including a supporter, an upper fixture and a lower fixture, and being molded into one body with plastic materials;

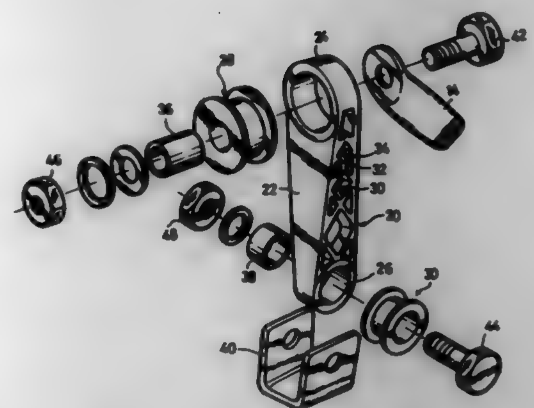

the upper and lower fixtures having axial spaces respectively, the fixtures being respectively formed on upper and lower ends of the supporter and the spaces crossing at right angles each other with a predetermined distance;

elastic members which are inserted on the inside of the upper and lower fixtures;

bolts and nuts for clamping both ends of the connecting member with the stabilizer bar and the lower control arm respectively.

5,702,122

REAR SUSPENSION OF VEHICLE

Masaharu Satou, Tokyo; Tamiyoshi Kasahara; Takuya Murakami, both of Fujisawa; Kenji Kawagoe, Yokosuka; Takaaki Uno, Atsugi; Hideo Aimoto, Zama, and Tamaki Horiuchi, Yokohama, all of Japan, assignors to Nissan Motor Co., Ltd., Yokohama, Japan

Filed Oct. 6, 1995, Ser. No. 540,393

Claims priority, application Japan, Oct. 7, 1994, 6-243982

Int. Cl.⁶ B60G *3/00*

U.S. Cl. 280—691 11 Claims

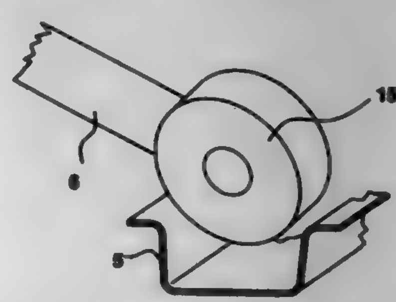

1. A rear suspension of a vehicle having a vehicle body, comprising:

a suspension member adapted to be resiliently supported to the floor of said vehicle body through at least a first and a second resilient bushing;

a vertically-oscillatable lower link system including,

a curved forward lower link member extending along a widthwise direction with respect to said vehicle body, said curved forward lower link member having a channel region, said forward link member having a first end adapted to be connected to said axle supporting member by a third resilient bushing, said forward lower link member having a second end adapted to be connected to said suspension member by a fourth resilient bushing; and

a radius rod having a first end adapted to be seated in the channel region adjacent to the first end of said forward lower link member, said radius rod having a second end adapted to be connected to said suspension member by a fifth resilient bushing;

a vertically-oscillatable upper link system coupled to said suspension member by at least a sixth and a seventh resilient bushing, said vertically-oscillatable upper link system cooperating with said vertically-oscillatable lower link system and adapted to suspend the rear wheel to said vehicle body; and

a suspension spring adapted to extend between said vertically-oscillatable lower link system and said vehicle body, said suspension spring adapted to seat in the channel region in a central region between the first and second ends of said forward lower link member.

5,702,123

AIR BAG APPARATUS FOR PASSENGER SEAT

Hiroyuki Takahashi; Makoto Hamada; Hiromichi Fujishima; Masaaki Naito, all of Aichi-ken; Kazuya Sasaki; Jiro Tsuchiya, both of Shizuoka-ken, and Tomoharu Maeda, Aichi-ken, all of Japan, assignors to Toyota Jidosha Kabushiki Kaisha, Toyota, Japan

Filed Mar. 7, 1996, Ser. No. 613,378

Claims priority, application Japan, Mar. 31, 1995, 7-076135

Int. Cl.⁶ B60R *21/32*

U.S. Cl. 280—735 22 Claims

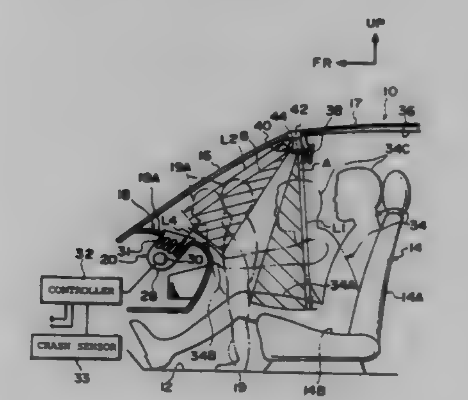

1. An air bag apparatus for a passenger seat, comprising:

a first sensor for detecting an occupant seated in a passenger seat;

a second sensor for detecting a state in which the occupant is approaching an instrument panel excluding a state in which the occupant puts out his or her hand(s) on the instrument panel; and

a deployment controller for changing the control of deployment of an air bag when the occupant is detected by said first sensor and the state in which the occupant is approaching the instrument panel is detected by said second sensor.

5,702,124

METHOD AND APPARATUS FOR SENSING A VEHICLE CRASH USING A DISPLACEMENT VELOCITY METRIC

Chek-Peng Foo, Ann Arbor; Huahn-Fern Yeh, Novi; Timothy Chester Wright, and Anne Marie Shields, both of Ann Arbor, all of Mich., assignors to TRW Inc., Lyndhurst, Ohio

Filed Apr. 22, 1996, Ser. No. 635,698

Int. Cl.⁶ B60R *21/32*

U.S. Cl. 280—735 10 Claims

1. An apparatus for sensing a vehicle crash comprising:

means for determining a crash velocity value;

means for determining a crash displacement value;

threshold determining means for determining a displacement threshold value functionally related to said crash velocity value; and

control means operatively connected to said displacement determining means and said displacement threshold determining means for providing a signal indicative of a vehicle crash

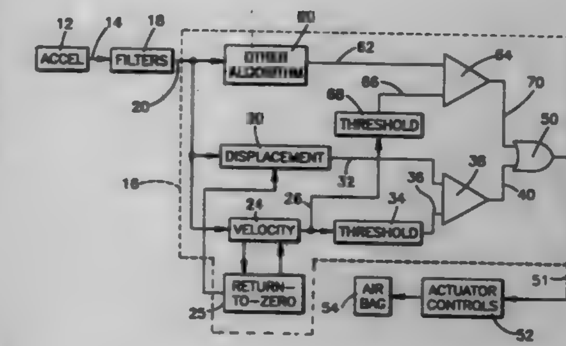

when the crash displacement value is greater than said displacement threshold value.

5,702,125

ARRANGEMENT OF DISPOSITION OF CANISTER IN VEHICLE

Takeaki Nakajima, and Kazumi Yamazaki, both of Saitama, Japan, assignors to Honda Giken Kogyo Kabushiki Kaisha, Tokyo, Japan

Filed Aug. 21, 1995, Ser. No. 517,335

Claims priority, application Japan, Aug. 17, 1994, 6-193208

Int. Cl.⁶ B60K *15/07*

U.S. Cl. 280—834 20 Claims

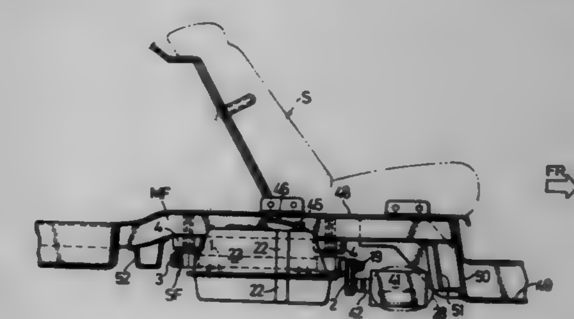

1. An arrangement of disposition of a canister in a vehicle, the arrangement comprising a canister, a rear floor panel connected to a rear portion of a front floor panel through an upwardly rising connecting wall, and a fuel tank supported below said rear floor panel, wherein said canister is disposed between a rear surface of said connecting wall and a front surface of said fuel tank.

5,702,126

MAGNETIC BOOK AND METHOD OF FORMING SAME

Peter H. Engel, 144 N. Robertson Blvd., Los Angeles, Calif. 90048-3102

Filed Jul. 11, 1995, Ser. No. 500,537

Int. Cl.⁶ B42D *1/00;3/00;* B42F *11/03*

U.S. Cl. 281—29 12 Claims

1. A book construction comprising:

a sheet of readily foldable material for defining a cover jacket,

an adhesive coating formed on a planar surface of said sheet of material,

a planar permanent magnet sized to define a cover adhesively secured to a portion of said coated surface of said sheet of material,

a cover blank sized to define an opposite cover adhesively secured to said coated sheet of material opposite said permanent magnet and spaced therefrom,

said cover blank and planar permanent magnet, each having outer edges,

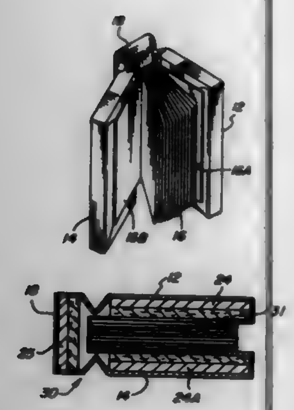

said sheet of material having a length and width greater than the combined length of said cover blank and magnet and the width of said cover and magnet, and said sheet of material having marginal flaps circumscribing said outer edges of said cover blank and planar permanent magnet adhesively secured to said sheet of material,

said marginal flaps being reversely folded about said outer edges of said cover blank and planar permanent magnet to form an integral hingedly connected front and rear cover,

and a series of bound pages disposed between said front and rear covers, said series of pages being bounded together along one edge thereof,

said bound pages including opposed end most pages,

said end most pages being adhesively secured to the adjacent front and rear covers for supporting said bound pages between said covers.

5,702,127

FORM WITH SELECTIVELY SPACED APPLIANCE LABELS

Joseph Korondi, Jr., Peoria, Ill., assignor to Uarco Incorporated, Barrington, Ill.

Filed Sep. 11, 1995, Ser. No. 526,756

Int. Cl.⁶ B42D *15/00;* **B32B** *3/10*

U.S. Cl. 283—81 **11 Claims**

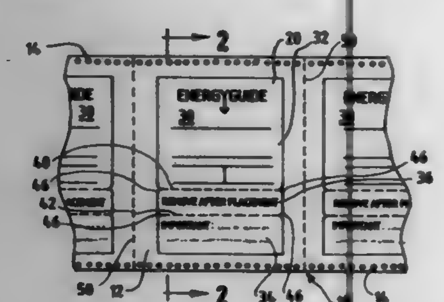

1. A label form providing multiple appliance labels for application to an appliance requiring specific spacing between labels, comprising:

a release liner;

a label ply having a pair of substantially parallel perforations spaced apart a selected distance, said label ply between said perforations defining a strip with first and Second information labels attached to opposite sides of the strip at the perforations; and

a layer of adhesive between the release liner and the label ply, said adhesive on the strip being deadened.

5,702,128

RADIOGRAPHIC MARKER SYSTEM AND METHOD OF MAKING SAME

Rosemary S. Maxim, Farmington, and Hermann K. Kasper, Plantsville, both of Conn., assignors to Beekley Corporation, Bristol, Conn.

Filed Jul. 18, 1996, Ser. No. 683,175

Int. Cl.⁶ B42D *15/00*

U.S. Cl. 283—81 **22 Claims**

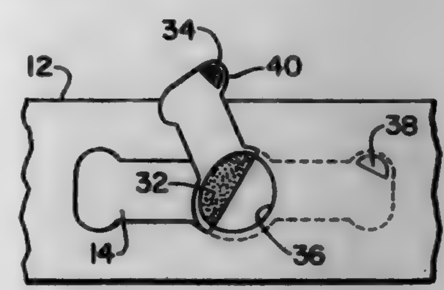

1. A radiographic marker system, comprising:

a radiopaque marker,

a label having a front side for supporting the radiopaque marker and an opposite adhesive side, the label including a central portion and an extension portion extending outwardly from the central portion, and

a base tape adhered to the adhesive side of the label, the base tape having a first cut-out portion underlying the central portion, the first cut-out portion being separable from the remainder of the base tape and being configured to remain adhered to the label when the label is removed from the base tape.

5,702,129

RISER ASSEMBLY FOR UNDERGROUND PIPE CONNECTIONS

Donald Weber Harrington, Lynchburg, Va., assignor to Donald Harrington, Lynchburg, Va.

Filed Jan. 29, 1996, Ser. No. 593,367

Int. Cl.⁶ F16L *35/00;41/00*

U.S. Cl. 285—45 **14 Claims**

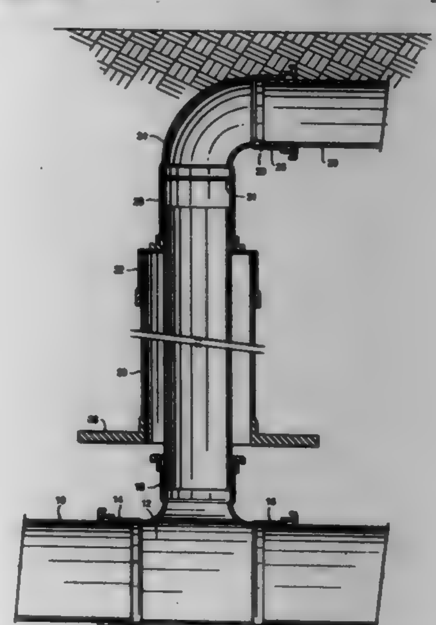

1. A riser assembly for underground pipe connections between a lateral pipe disposed above a generally horizontally extending main pipe and having a riser pipe extending generally vertically from a main fitting on the main pipe comprising:

a casing pipe for surrounding and axial movement relative to the riser pipe;

a casing cap connected to the casing pipe at its upper end; and

an elbow having a horizontally extending portion for connection with the lateral pipe and a vertical extending portion for slidably receiving an upper end of the riser, said vertical portion engaging said casing cap, said casing pipe having a casing shoe adjacent a lower end thereof for distributing loading on the casing pipe, casing cap and elbow to surrounding bedding without loading the riser or main fitting.

5,702,130

FLUID FLOW CONNECTOR

Erstad Jostein, Bergen, Norway, assignor to Framo Engineering AS, Nesttun, Norway

Filed Nov. 16, 1995, Ser. No. 558,449

Claims priority, application United Kingdom, Nov. 1, 1995, 9522325

Int. Cl.⁶ F16L *17/035*

U.S. Cl. 285—96 **10 Claims**

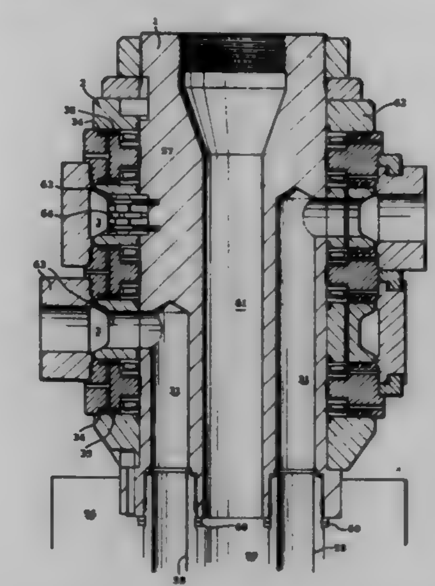

1. In an outdoor air conditioning condensing unit having a wraparound condenser and a top mounted fan to draw ambient air through the condenser in combination with an externally mounted evaporative cooling system to spray water on the condenser to increase the rate of heat transfer, said evaporative cooling system comprising a tubular manifold encircling the base of the condensing unit coextensive with the wraparound condenser, said manifold having an inlet connected to a source of water pressure, a plurality of vertically extending pipes in fluid communication with said manifold and spaced along the manifold to overlie the condenser for its peripheral extent, each vertical pipe being provided with at least one spray nozzle, said vertical pipes being divided into a number of spray stages with each spray stage comprising at least one vertical pipe, an electrically controlled solenoid valve mounted in fluid control relationship in said manifold at the inlet of each said spray stages, a plurality of thermal switches arranged around the condenser internally of the condensing unit at locations to sense the temperature of the air leaving the condenser at the respective spray stage locations, each thermal switch being set at a different but increasing temperature setting, each thermal switch being electrically connected with a manifold solenoid valve associated with its respective spray stage whereby a modulated spray pattern is generated across said condenser as a function of condenser discharge air temperature.

5,702,131

OUTLET FITTING FOR A PORTABLE TURBINE

Joseph W. Kieffer, Rogers, Minn., assignor to Wagner Spray Tech Corporation, Minneapolis, Minn.

Filed Mar. 1, 1996, Ser. No. 596,875

Int. Cl.⁶ F16L *5/00*

U.S. Cl. 285—139.3 **15 Claims**

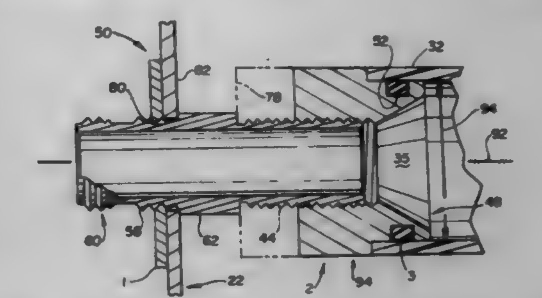

1. An outlet fitting combination with a portable turbine carried in an enclosure, the turbine having an exhaust tube of fixed internal diameter, the outlet fitting in combination with the turbine and enclosure, the outlet fitting comprising:

a) an annular reducer member having a bore therethrough carrying internal threads and having an external diameter at a first end thereof closely interfitting the internal diameter of the exhaust tube of the portable turbine; and

b) an exhaust pipe having a first set of external threads thereon at a first end thereof to matingly engage the internal threads of the annular reducer and wherein the exhaust pipe further has mounting means securing the exhaust pipe to the enclosure of the turbine.

5,702,132

PIVOTAL LINK

Hans-Werner Friederich, Winsen, and Günter Kupczik, Wittenbergener Weg 18, DE 22559 Hamburg, both of Germany, assignors to Günter Kupczik, and Phoenix Aktiengesellschaft, both of Hamburg, Germany

PCT No. PCT/DE94/00428, § 371 Date Dec. 12, 1994, § 102(e) Date Dec. 12, 1994, PCT Pub. No. WO94/25784, PCT Pub. Date Nov. 10, 1994

PCT Filed Apr. 20, 1994, Ser. No. 356,291

Claims priority, application Germany, Apr. 24, 1993, 43 13 501.3

Int. Cl.⁶ F16L *21/00*

U.S. Cl. 285—235 **18 Claims**

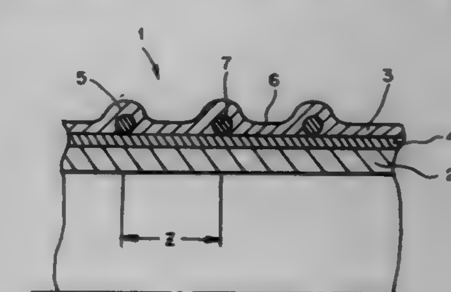

1. Pivotal link having an axial direction X and a radial direction Y as a connection piece between two construction parts, with at least one construction part having means for being supported rotatable around its horizontal axis,

said pivotal link comprising a hose having a hose core and a hose cover, and made of elastomeric material; said pivotal link having means for being supported rotatably around its horizontal axis;

an embedded strength carrier located between the hose core and the hose cover, said carrier including threads forming at least one layer and extending at an angle α relative to the axial

direction X of the pivotal link, said angle α ranging between zero degrees and ±5 degrees, only insignificantly deviating from zero degrees, with a crossed, arrangement of the threads;

wherein the threads extending in the axial direction X of the pivotal link consist of an extensible material;

wherein the threads extending in the axial direction X are additionally provided with threads extending at an angle β relative to the radial direction Y of the pivotal link, said angle β ranging between zero degrees and ±5 degrees with the threads extending at said angle β ranging from crossed to uncrossed; and

rings for the pivotal link engaging the hose and being arranged in the radial direction; and

wherein the rings are arranged across the total length of the pivotal link and, in this connection, have approximately the same spacing Z relative to each other.

5,702,133
UNIVERSAL SNAP-IN METAL PLUG
Carol P. Pavur, Warren; Dennis Harper, Romulus; Steven W. Bonnell, Macomb Township, all of Mich.; James F. Norkus, Waterbury; William F. Hartery, Watertown, both of Conn., and Lawrence W. Galloway, Elgin, Ill., assignors to Chrysler Corporation, Auburn Hills, Mich.
Filed Mar. 18, 1996, Ser. No. 617,250
Int. Cl.⁶ E05C *19/06*
U.S. Cl. 292—80 **1 Claim**

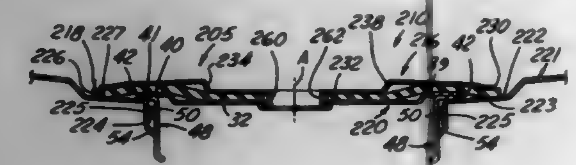

1. A composite snap-in plug adapted for closing either a panel flat circular opening or a panel flanged circular opening wherein the openings have the same diameter, and wherein the panel flange is downstanding from an exterior to an interior panel surface defining an interior cylindrical wall terminating in a circular under-edge, the composite plug comprising:

a circular elastomeric seal pad concentrically positioned between an exterior surface of an annular plug and an annular pressure plate, said plug formed with a circular edge interspersed with a plurality of tongue portions extending radially from the plug axis, each said tongue portion extending radially outward to a terminus defined by a fold line formed by a reversely folded ply, wherein said fold line is located at least slightly beyond said circular edge, each said ply having a radially inner terminus defined by a bend juncture terminating in a downstanding finger defining opposite vertically disposed side edges, each finger side edge having a resilient upper tang protruding radially outward and upward therefrom defining an upper tang free end, whereby said plug is locked in the panel flat opening upon each upper tang free end being positioned, in a snap-in manner, juxtaposed to the panel interior surface;

each said finger having a resilient lower tang protruding radially outward and upward therefrom defining an upper free end, each said finger lower tang symmetrically disposed about a radial plane of symmetry which includes its associated tongue center line, whereby said plug is locked in the panel flanged opening upon each said finger having its upper tangs urged into resiliently biased contact with the circular flange opening interior cylindrical wall, and whereby each said lower tang upper free end is positioned, in a snap-in manner, juxtaposed the circular under-edge of the flanged opening;

said plate being shaped with a concentric depressed wheel formed with a central hub portion securing said plate to said plug, after being passed through a pad central aperture and an aligned aperture in said plug, whereby said hub is deformed for engaging an interior surface of said plug;

said plate wheel terminating in an upstanding rim, a plurality of uniformly spaced resilient plate portions extending radially outwardly and downwardly from an upper circular edge of said rim, whereby each said plate portion retains a portion of said pad in sealing contact with a portion of said panel exterior surface surrounding said plug;

wherein certain of said plate portions are in the form of a generally T-shaped leafs symmetrically disposed about a radial line of symmetry intersecting said axis, each said T-shaped leaf defining a radial stem with its inner end joined to said rim upper edge and an outer end terminating in a semi-circular arm, whereby each said arm has an outer arcuate edge defining a portion of said plate peripheral edge;

wherein each said semi-circular arm subtends a predetermined radial angle between its radially disposed free arm ends, and wherein adjacent semi-circular arms define a radial gap area between their opposed arm ends;

wherein each said T-shaped leaf, together with a next adjacent T-shaped, leaf define therebetween a fan-shaped space, each said fan-shaped space following, in matching spaced relation, the profile of a fan-shaped pedal having an inner concentric free edge joined to said rim upper edge and an outer concentric free edge adapted to engage an intermediate portion of said pad, and wherein each said fan-shaped pedal and its associated fan-shaped space are symmetrically disposed about a radial line of symmetry which bisects an associated radial gap area; and

wherein each said T-shaped leaf and fan-shaped pedal is sloped downwardly and outwardly from said rim upper edge, wherein said pressure plate defines a generally frusto-conical shaped surface.

5,702,134
DOOR LOCK SYSTEM
Chun-Kun Hsieh, Taipei Hsien, Taiwan, assignor to Ming Wei Industrial Co., Ltd., Taipei Hsien, Taiwan
Filed Oct. 3, 1996, Ser. No. 724,760
Int. Cl.⁶ E05B *65/10*
U.S. Cl. 292—92 **4 Claims**

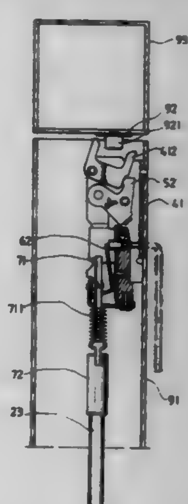

1. A door lock system comprising:

a control mechanism transversely mounted in a door in the middle, said control mechanism comprising an elongated casing fixedly mounted on said door in a horizontal position, a movable pressure plate coupled to said casing, and a linking mechanism mounted inside said casing and coupled to said movable pressure plate;

a transmission mechanism mounted in one hollow stile at one lateral side of said door and coupled to the linking mechanism of said control mechanism at one end at right angles, said transmission mechanism comprising a top transmission rod and a bottom transmission rod vertically disposed in reversed directions;

a bottom latch assembly mounted in said hollow stile near the bottom, said bottom latch assembly comprising a first shell fixedly fastened to said hollow stile on the inside near the bottom, and a bolt inserted through the first shell of said bottom latch assembly and coupled to the bottom transmission rod of said transmission mechanism; and

a top latch assembly mounted in said hollow stile near the top and coupled to the top transmission rod of said transmission mechanism;

wherein said top latch assembly comprises:

a second shell mounted inside said hollow stile and having at least one mounting hole adapted for fastening to a respective mounting hole in said hollow stile;

a movable latch bolt pivoted to the second shell of said top latch assembly and adapted for engaging a retainer rod in a catch plate in a door frame to secure said door to said door frame;

a frame mounted in the second shell of said top latch assembly, said frame comprising a pivot transversely disposed at a top side thereof, a mounting notch, a bottom opening, a plurality of screw holes vertically spaced at a rear side thereof and adapted for fastening to said hollow stile, and a fine adjustment hole spaced between the screw holes of said frame;

a push member having one end pivoted to the second shell of said top latch assembly, and an opposite end pivoted to the pivot of the frame of said top latch assembly;

a locating device mounted in the frame of said top latch assembly, said locating device comprised of a first locating plate, and a second locating plate, said first locating plate comprising a vertical section inserted into the mounting notch of the frame of said top latch assembly, a coupling slot in the vertical section of said first locating plate, a horizontal section extending from a bottom side of the vertical section of said first locating plate at right angles, a through hole and a screw hole spaced in the horizontal section, the screw hole of the horizontal section of said first locating plate being fixedly secured to the frame of said top latch assembly by a screw, said second locating plate comprising a vertical section inserted into the bottom opening of the frame of said top latch assembly, an upright extension strip extending from a top side of the vertical section of said second locating plate the top, a horizontal section extending from a bottom side of the vertical section of said second locating plate at right angles and inserted into the coupling slot of said first locating plate, and a through hole aligned with the through hole of said first locating plate;

an actuating device, said adjustment device comprising a socket coupled to said top transmission rod of said transmission mechanism, a movable rod having one end pivoted to said socket and an opposite end inserted through the through hole of said first locating plate and the through hole of said second locating plate;

a fine adjustment device mounted in the fine adjustment hole of the frame of said top latch assembly, and adapted for stopping against the upright extension strip of said second locating plate of said locating device for securing the movable rod of said actuating device to said locating device;

said latch bolt of said top latch assembly is driven by said transmission mechanism to turn downward from said catch plate when the pressure plate of said control mechanism is depressed to move said link, permitting said fine adjustment device to be adjusted for letting the movable rod of said adjustment device be moved vertically to the desired position and then fixed in the adjusted position by fastening tight said fine adjustment device again.

5,702,135
CARTON CLOSURE APPARATUS
Paul J. Burress, 2 Valerie Ann Ct., Bloomington, Ill. 61704
Filed Dec. 30, 1996, Ser. No. 777,458
Int. Cl.⁶ E05C *1/04;* **B65B** *51/08*
U.S. Cl. 292—145 **11 Claims**

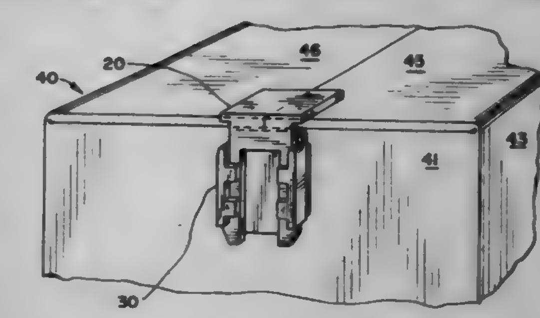

1. A carton closure apparatus for releasably and securely closing a carton having a rectangular bottom, two shorter side walls having a top edge and a bottom edge, two longer side walls having a top edge and a bottom edge, two minor top flaps connected respectively to the shorter side walls along their top edges, and two major top flaps connected respectively to the longer side walls along their top edges, the carton closure apparatus comprising:

(a) an insert having a rigid planar surface with a straight-edged side and also having a latching member extending away from and at a right angle to the straight-edged side, the latching member having an identical front and back; and

(b) a socket having a planar surface and also having a fastener for attaching one side of the planar surface flush against a side wall of a carton, the other side of the planar surface having a receiving member for releasably and securely engaging the latching member of insert;

such that, when the socket is attached to one of the shorter side walls of a carton at a point along the top edge and equidistant from the adjoining longer side walls, and when the two major top flaps are folded over the two minor top flaps, and when the insert is latched into the socket with the insert's planar surface extending over a portion of each of the major top flaps, then the carton is releasably and securely closed: and such that the insert can also be latched into the socket with the insert's planar surface extending away from the major top flaps so the carton can be opened and loaded or unloaded as if the carton closure apparatus were not present.

5,702,136
MOTOR-VEHICLE DOOR LATCH WITH CHILD-SAFETY LOCKOUT
Bernhard Funk, Essen, and Gerhard Menz, Heiligenhaus, both of Germany, assignors to Kiekert AG, Heiligenhaus, Germany
Filed Apr. 3, 1996, Ser. No. 627,184
Claims priority, application Germany, Apr. 4, 1995, 195 12 573.8
Int. Cl.⁶ E05B *3/00*
U.S. Cl. 292—336.3 **6 Claims**

1. A motor-vehicle door latch comprising;

a latch housing adapted to be mounted in a motor-vehicle door having an inner wall;

means including an opening lever displaceable into an actuated position for unlatching the door;

an inside door handle;

a child-safety housing mountable on the inner door wall and provided with a button linearly displaceable in the child-safety housing between an actuated position and an unactuated position;

a child-safety lever on the latch housing displaceable between a child-safety on position and a child-safety off position;

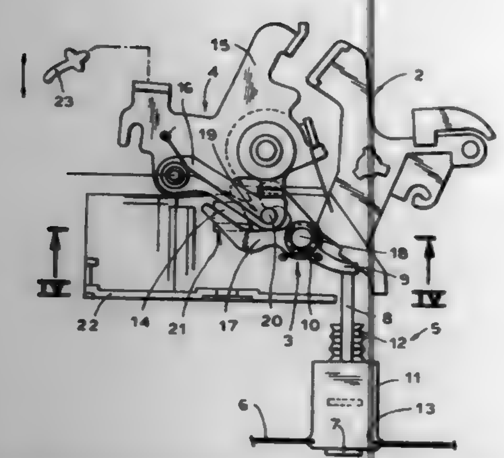

means connected to the child-safety lever for biasing it continuously into one of its positions;

a child-safety actuating element extending out of the child-safety housing, connected to the button and engaging the child-safety lever, and displaceable by the button on displacement of the button between its actuated and unactuated positions between a pair of end positions corresponding to the on and off positions of the child-safety lever; and

actuating means connected to the child-safety actuating element and connected between the inside door handle and the opening lever for displacing the opening lever into the actuated position on operation of the inside door handle when the child-safety lever is in its off position and for decoupling the inside handle from the opening lever when the child-safety lever is in its on position.

5,702,137

STAFF OR STICK FOR RECOLLECTING ORGANIC WASTE FROM DOMESTIC ANIMALS SUCH AS DOGS AND CATS

José Núñez Gutierrez, Bosques del Rayo No. 19, Col. La Herradura, 53920 Naucalpan, Edo de México, Mexico

Filed Jul. 31, 1996, Ser. No. 690,679

Claims priority, application Mexico, Jul. 31, 1995, 95 234

Int. Cl.^{6} A01K *29/00;* **E01H** *1/12*

U.S. Cl. 294—1.4 **2 Claims**

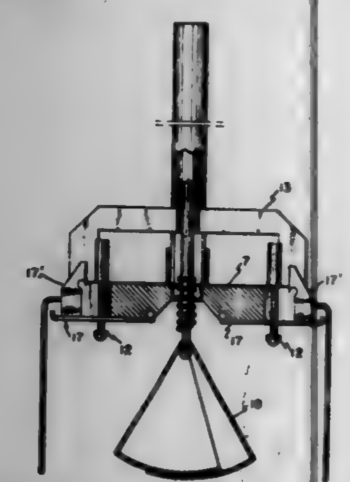

1. A staff assembly for collecting the waste of domestic animals in a container, said staff assembly comprising:

an external tubular socket;

an internal tube positioned within the external tubular socket;

a base positioned at a lower portion of said tubular socket;

a central rod positioned within the internal tube, said central rod having a central bolt and a spring at an end thereof, said central rod and spring extending through a hole in said base;

a crank for activating the central bolt and spring;

handle and spring means coordinated with said tubular socket; and

a plurality of hinges releasably fastened to an underside of said base via respective side bolts; wherein said hinges, side bolts and central bolt are structured and arranged such that a container for collecting waste is held in an opened condition thereby, said tubular socket being coordinated with said handle and spring means and with said plurality of hinges such that upon activation of said handle and spring means the hinges are released, thereby closing the container on the waste; said central rod and spring being coordinated with said crank such that upon activation of said crank said central rod and spring release said container from said staff.

5,702,138

COLLECTOR/CARRIER FOR ANIMAL EXCREMENT

Jules Elkind, 4387 Jasmine, Culver City, Calif. 90232

Filed Mar. 24, 1997, Ser. No. 823,802

Int. Cl.^{6} A01K *29/00;* **E01H** *1/12*

U.S. Cl. 294—1.4 **5 Claims**

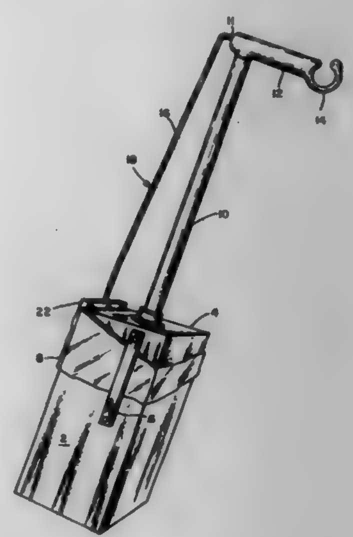

1. An animal refuse collecting and carrying device comprising

a shovel having a first portion adapted to be a collecting scoop and a second portion adapted to be grasped by an operator;

an elongated rectangular container, having flat sides and a slanted open end with a leading edge thereof to define a collection receptacle, said container being sized to receive a disposable plastic bag positionable therein;

a container cover, said cover being sized to completely close said open end of said container, providing an aperture space for said collecting scoop to be inserted inside said open end and be supported by said container;

means for hinging said cover to said container, permitting said cover to be swung fully open without obstructing said collection receptacle; and

a rigid carrier handle, having a first portion defined as a grip for grasping by an operator, a second portion being an elongated rigid tubular member, said tubular member being attached at its top to one end of said grip at an angle of approximately 90 degrees to the longitudinal axis of said grip, and attachment means at the bottom end of said tubular member for affixing said tubular member perpendicular to the center top surface of said container cover, said tubular member being affixed in an orientation such that said grip projects backwards from said tubular member away from the front leading edge of said container to alleviate hand carrying fatigue.

5,702,139

BACK-UP POWER TONGS

David A. Buck, 1348 Sawmill Hwy., Breaux Bridge, La. 70517

Continuation-in-part of Ser. No. 542,780, Oct. 13, 1995, Pat. No. 5,671,961. This application Oct. 11, 1996, Ser. No. 728,773

Int. Cl.^{6} B23P *19/04;* **B25J** *15/00*

U.S. Cl. 294—88 **20 Claims**

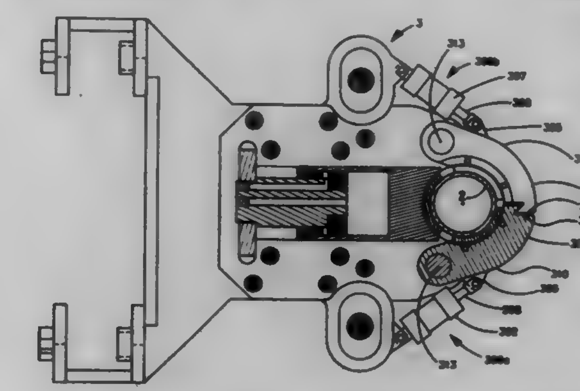

1. A system for making up or breaking apart a threaded joint on a tubular member comprising:

a. a power tong gripping a first section of said tubular member on one side of said threaded joint in order to apply torque to said first section; and

b. a back-up tong gripping a second section of said tubular member on an opposite side of said threaded joint in order to hold said second section against rotation, said back-up tong comprising:

i. a body having a front end formed by first and second pivoting jaws which both grip said tubular member when in the closed position;

ii. a linear actuator attached between said body and said first and second pivoting jaws which provides a closing force on the tubular member; and

iii. a third jaw positioned on said body such that said first and second pivoting jaws and said third jaw substantially enclose the tubular member such that said closing force of said linear actuators is sufficient to prevent rotation of the tubular member about a longitudinal axis of the tubular member.

5,702,140

CARRIER FOR HOCKEY ARTICLES AND EQUIPMENT

Thomas S. Radja, 10717 Meadow La., Palos Hills, Ill. 60465

Filed Feb. 23, 1996, Ser. No. 606,059

Int. Cl.^{6} A45F *5/00*

U.S. Cl. 294—146 **22 Claims**

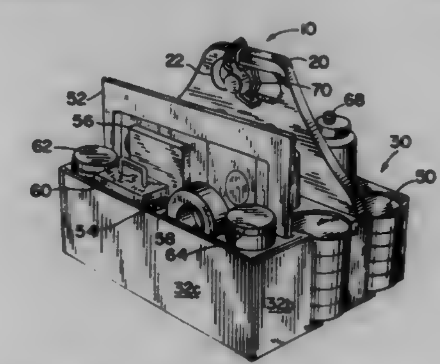

1. A carrier, which comprises:

a base having a plurality of compartments configured to carry articles and equipment at least one of the compartments being adapted to carry a container, at least one of the compartments being adapted to carry hockey pucks or balls, the at least one compartment adapted to carry hockey pucks or balls including at least one substantially vertical opening providing access to the hockey pucks or balls; and

a handle coupled to the base;

wherein at least one of the plurality of compartments has at least one aperture adapted to allow fluid drainage from the base.

5,702,141

POLYBLOCK RAILWAY WHEEL

Jacques Broucke, Coudekerque, and Francois DeMilly, Dunkerque, both of France, assignors to Valdunes, Puteaux, France

Filed May 24, 1996, Ser. No. 653,587

Claims priority, application France, May 30, 1995, 95 06330

Int. Cl.^{6} B60B *17/00*

U.S. Cl. 295—7 **7 Claims**

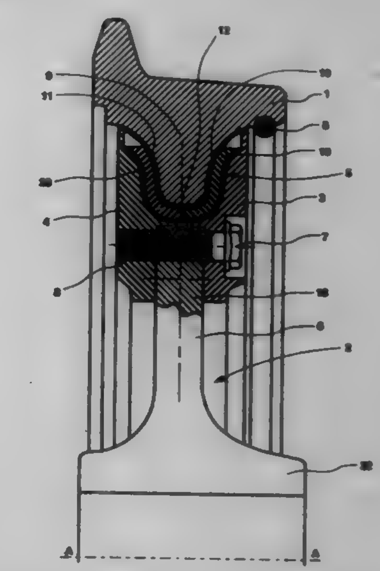

1. Polyblock railway wheel comprising:

a rim having an inner portion including two connecting fillets on opposite sides of a plane of symmetry of said wheel and an annular generally flat strip portion interconnecting said two connecting fillets in an innermost part of said two connecting fillets;

a centre part including a hub and web;

at least one flange member;

means for fixing said at least one flange member against said web; and

weight of under 110 Kg, a radial dynamic rigidity between 6×10^8 and 16×10^8 N/m, and an axial dynamic rigidity between 3×10^8 and 8×10^8 N/m.

5,702,142

TRAUMA UNIT FOR VEHICLE

Arthur E. Newell, 500 Danbury La., Topeka, Kans. 66606

Filed Nov. 9, 1995, Ser. No. 556,223

Int. Cl.^{6} A61G *3/00*

U.S. Cl. 296—19 **23 Claims**

1. A trauma unit for mounting on a vehicle including front and back ends, a driver/passenger area located in proximity to the front end, and a bed extending between the driver/passenger area and the vehicle back end, wherein said trauma unit comprises:

(a) a frame adapted to overlie the bed and having front and back ends and opposite driver and passenger sides;

(b) said frame having a patient-immobilizing-panel support portion located along a respective said side of the frame;

(c) at least one hook on said frame positioned to engage a rear portion of said vehicle; and

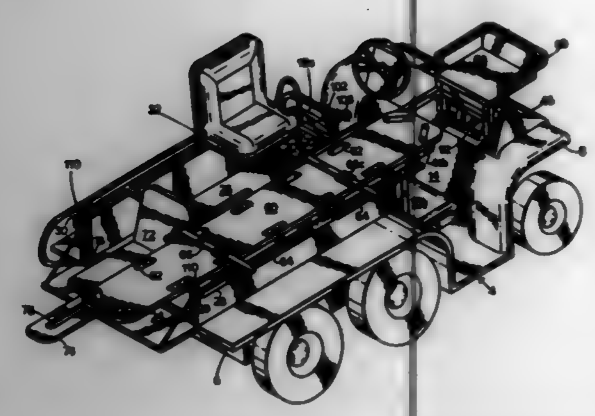

(d) at least one pin engageable with said frame and removably engageable with a sleeve attached to said vehicle when said hook is engaged with said vehicle rear portion.

5,702,143
ARRANGEMENT FOR ANCHORING A GUARD NET IN AUTOMOBILE
Mitsuo Shimazaki, Akishima, Japan, assignor to Tachi-S Co., Ltd., Tokyo, Japan
Filed Mar. 15, 1996, Ser. No. 616,582
Int. Cl.⁶ B60R *5/04*
U.S. Cl. 296—24.1 **19 Claims**

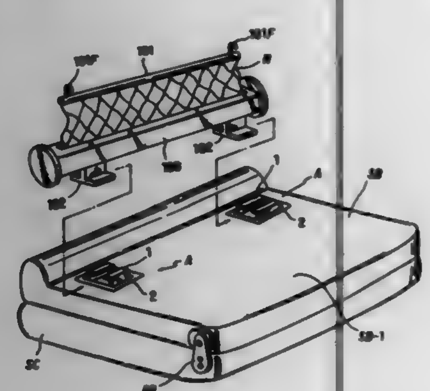

1. An arrangement for anchoring a net means to a foldable type of automotive seat, in which the automotive seat has a seat cushion and a seat back foldable onto the seat cushion and the net means may be drawn downwards from a ceiling of an automobile and anchored, via an anchor member thereof, to a rear side of the seat back folded onto the seat cushion so as to partition an interior of the automobile into a front cabin section and a rear cabin section, with the rear side of the seat back serving as a load-carrying platform in the rear cabin section, said arrangement comprising:

a tray-like storage means embedded in said rear side of said seat back, said tray-like storage member having a storage space opened from said rear side of said seat back; and

a reversible anchor engagement means which is rotatably provided for permitting its reversal in said storage space of said tray-like storage means such as to present a selected one of an enagement side and a flat side, wherein said anchor member of said net means is to be engaged with said engagement side to anchor said net means to said rear side of said seat back, and wherein said flat side provides a flat plane generally flush with said rear side of said seat back.

5,702,144
ARTICLE STORAGE STRUCTURE FOR MOTOR VEHICLE
Tatsuo Matsuura, and Atsushi Inoue, both of Wako, Japan, assignors to Honda Giken Kogyo Kabushiki Kaisha, Tokyo, Japan
Filed Sep. 30, 1996, Ser. No. 722,929
Claims priority, application Japan, Oct. 6, 1995, 7-259945
Int. Cl.⁶ B60R *7/00*
U.S. Cl. 296—37.13 **5 Claims**

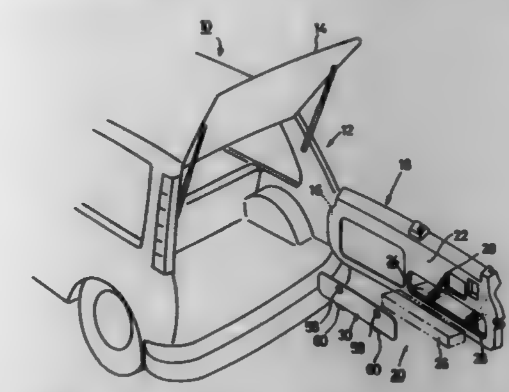

1. An article storage structure comprising:

a wall defining a cavity in an inner lining of a motor vehicle tailgate;

a belt for fastening an article stored in said cavity;

fastening means, connected to said opposite ends of said belt, for tightening said belt; and

fastener means for fastening a folded portion of said belt to an inner surface of said wall, said fastener means comprising:

an eyelet inserted in a hole defined in said folded portion of said belt; and

a fastening element inserted through said eyelet to connect said belt to said inner surface of said wall.

5,702,145
FOLDING SECOND SEAT WITH SEAT TRACK RELEASE LATCH MECHANISM
Thomas J. Fowler, Allen Park, and Livia Rus, Troy, both of Mich., assignors to Lear Seating Corporation, Southfield, Mich.
Continuation-in-part of Ser. No. 267,977, Jun. 29, 1994, abandoned. This application Sep. 27, 1996, Ser. No. 636,279
Int. Cl.⁶ B60N *2/36*
U.S. Cl. 296—66 **8 Claims**

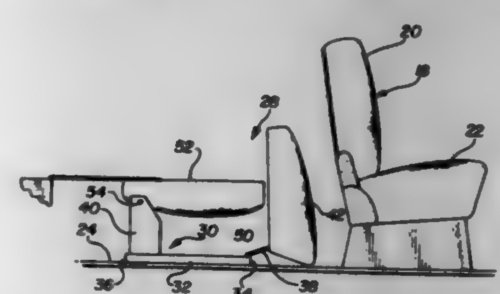

1. A vehicular seat assembly (28) for attachment to a floor (24) of a vehicle (10), said vehicular seat assembly (28) comprising:

seat back (50) and a seat cushion (42) supported for pivotal movement into and out of a seat forming position;

seat track means (32) supporting said seat assembly (28) for rectilinear fore and aft movement, said seat track means (32) including seat adjustment means (53) selectively operable between a locked position for preventing said rectilinear fore and aft movement of said seat cushion (42) and a release position for adjusting said rectilinear fore and aft position of said seat cushion (42).

safety locking means (58) for preventing said fore and aft adjustment of said seat cushion (42) in response to pivotal movement of said seat cushion (42) out of said seat forming position,

said safety locking means (58) including camming means (61) for engaging said seat back (50) and moving said seat adjustment means (52) out of said lock position and into said release position in response to said seat back (50) pivoting out of said seat forming position while said seat cushion is maintained in said seat forming position and a disengaging lever (60) engageble with said seat cushion (42) for disengaging said camming means (61) from said seat back (50) in response to said seat cushion moving out of said seat forming position to maintain said seat adjustment means (52) in said locked position and prevent fore and aft movement of said seat assembly (28).

5,702,146
FASTENER ASSEMBLY FOR SECURING A WINDSHIELD ON A VEHICLE BODY
Goro Asami, Tochigi-ken, Japan, assignor to Nifco, Inc., Japan
Continuation of Ser. No. 333,452, Nov. 2, 1994, abandoned.
This application Aug. 21, 1996, Ser. No. 701,033
Claims priority, application Japan, Dec. 10, 1993, 5-071912; Dec. 28, 1993, 5-075193
Int. Cl.⁶ B60J *1/02*
U.S. Cl. 296—96.21 **2 Claims**

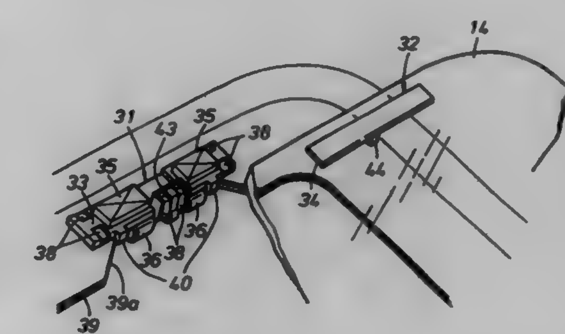

2. A fastener assembly for temporarily securing a windshield when mounting the windshield on a vehicle body, comprising:

a first fastener half having first attaching means on one surface thereof for securely attaching said first fastener half to an upper edge of an internal flange of a windshield frame of the vehicle body, and first engagement means on another surface thereof; and

a second fastener half having second attaching means on one surface thereof for securely attaching said second fastener half to an upper peripheral edge of the windshield, and a second engagement means provided on another surface thereof and adapted to be readily engaged and disengaged with and from said first engagement means;

said first fastener half being provided with locating means for preventing lateral movement of said first fastener half along a peripheral edge of the internal flange;

wherein said fastener halves includes means for preventing downward shifting of said second fastener half with respect to first fastener half when said first and second engagement means are engaged; and

wherein said locating means includes a notch in the internal flange and a pair of projections on said first fastener half for preventing lateral movement of said first fastener half relative to the peripheral edge of the internal flange.

5,702,147
TAILGATE SEALING ARRANGEMENT
Richard C. Essig, Loveland, Colo., assignor to Bestop, Inc., Broomfield, Colo.
Filed May 9, 1995, Ser. No. 437,322
Int. Cl.⁶ B60J *7/08; 10/10*
U.S. Cl. 296—106 **18 Claims**

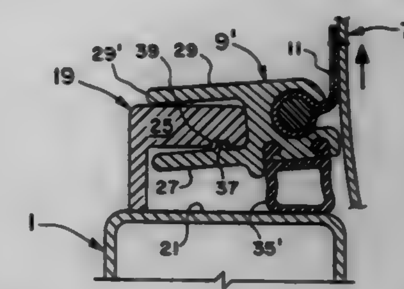

1. A vehicle having a tailgate and a flexible top with a downwardly extending rear portion, said vehicle including means for mounting said tailgate for movement independently of said flexible top between an open position providing access to the interior of the vehicle through a tailgate opening in the rear of the vehicle and a closed position preventing access to the interior through said tailgate opening, said rear portion of said flexible top having a lower section extending substantially horizontally and said tailgate having an upper, substantially flat surface with said flat surface extending substantially horizontally in said closed position and

an arrangement for sealingly engaging the lower section of the rear portion of said flexible top and the substantially flat, upper surface of said tailgate in said closed position, said arrangement including a substantially rigid, elongated member attached to the lower section of the rear portion of said flexible top, said rigid member having end portions spaced from each other, said arrangement further including a flexible seal mounted to said rigid member and extending therealong substantially between the end portions of said rigid member and means for removably mounting said rigid member to said vehicle in a first position extending across the tailgate opening with said flexible seal extending downwardly and substantially across said tailgate opening and sealingly engaging the horizontally extending, flat, upper surface of said tailgate in said closed position whereby said tailgate can be moved between said closed and opened positions independently of said flexible top without removing said rigid member from said first position mounted across said tailgate opening with the lower section of the rear portion of said flexible top attached thereto.

5,702,148
EXTERIOR DECORATIVE SURROUND MOLDING MODULE
Robert A. Vaughan, Dearborn; Willard C. Christian, Lambertville; John P. Zimmer, Canton, and James E. Mistopoulos, Saline, all of Mich., assignors to The Standard Products Company, Cleveland, Ohio
Filed Feb. 29, 1996, Ser. No. 608,607
Int. Cl.⁶ B60J *10/02*
U.S. Cl. 296—146.9 **24 Claims**

1. A decorative surround molding module for a vehicle having a window aperture for a translational glass pane, said window aperture having a perimeter, said module comprising:

a one-piece surround molding generally defining said perimeter of said window aperture, said surround molding having a belt line portion;

a glass run channel secured to said surround molding, said glass run channel guiding and supporting said translational glass pane;

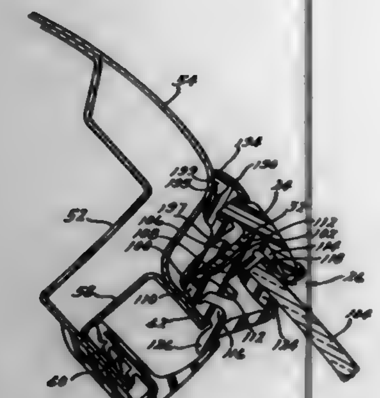

means for fastening said surround molding, wherein said fastening means attach said surround molding to a flange on said vehicle; and

wherein said glass run channel is secured to said surround molding, said surround molding being secured to said flange on said vehicle.

5,702,149

APPARATUS FOR THE DEFLECTING OF WIND

Daniel F. Sweeney, 39439 E. Archer, Harrison Township, Mich. 48045

Filed Mar. 11, 1996, Ser. No. 613,513

Int. Cl.[6] B60J *1/20*

U.S. Cl. 296—152 19 Claims

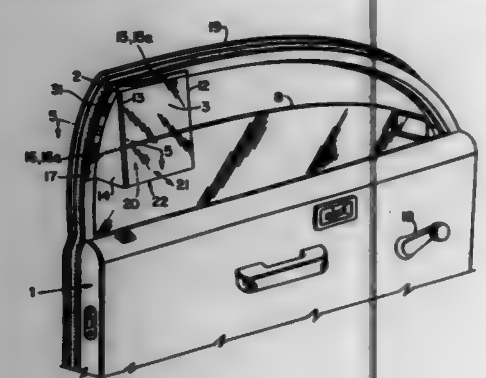

1. A wind deflector for a side window of a vehicle, said side window including a side window frame, said side window frame including an upper, generally horizontal portion and an upper rear, generally vertical portion, said wind deflector comprising:

a) a generally flat, generally quadrilateral, transparent sheet which forms a main structural member of said wind deflector;
b) said generally flat, generally quadrilateral, transparent sheet having a height and a width;
c) a generally flat, generally flexible end piece;
d) said generally flat, generally flexible end piece substantially forming a right triangle in shape, with a height edge substantially equal to said height of said generally flat, generally quadrilateral sheet;
e) a seam bonding said height edge of said generally flat, generally flexible end piece to a height edge of said generally flat, generally quadrilateral, transparent sheet;
f) one part of a first two-part fastener bonded to a top width edge of said generally flat, generally quadrilateral, transparent sheet;
g) one part of a second two-part fastener bonded to a generally hypotenuse edge of said generally flat, generally flexible end piece;
h) another part of said first two-part fastener attached to an upper rear, generally horizontal portion of said upper, generally horizontal portion of said side window frame of said vehicle; and
i) another part of said second two-part fastener attached to the upper rear, generally vertical portion of said side window frame of said vehicle;
j) wherein when each of said one fastener parts are fastened to each of said other fastener parts, respectively, said wind deflector is installed forming a pocket between said side window and said generally flat, generally quadrilateral, transparent sheet;
k) said two-part fasteners being separable whereby said wind deflector can be installed or removed as desired.

5,702,150

WIND DEFLECTING DEVICE FOR A CONVERTIBLE

Dieter Reuter, Ehningen, and Jens Quittenbaum, Wiernsheim, both of Germany, assignors to Dr. Ing. h.c.F. Porsche AG, Weissach, Germany

Filed Sep. 9, 1996, Ser. No. 709,676

Claims priority, application Germany, Sep. 9, 1995, 195 34 584.3

Int. Cl.[6] B62D *35/00*

U.S. Cl. 296—180.1 22 Claims

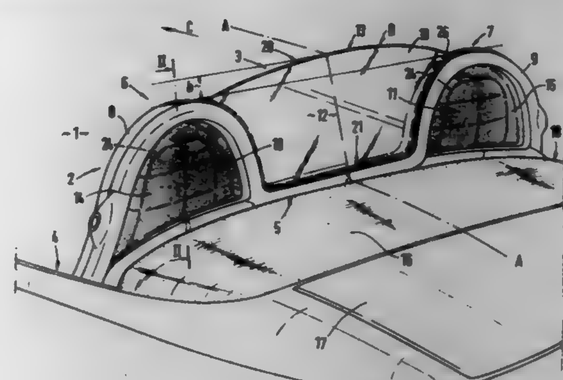

1. Wind deflecting device for a convertible having a stationary rollover bar, the wind deflecting device in its upright operating position being fixable on the rollover bar, wherein the rollover bar comprises a tube section which extends approximately at a of the convertible belt line level, and in the transverse direction of the convertible, and upwardly projecting bar sections in laterally exterior areas leading away from the tube section, and

wherein the wind deflecting device is composed of a center part and two lateral parts, the lateral parts being inserted into openings of the bar sections and the center part being inserted into a cutout of the rollover bar which is bounded by the bar sections and the transversely extending tube section.

5,702,151

VEHICLE BODY INCLUDING LEAKPROOF DAMAGE RESISTANT WALL CONSTRUCTION

Philip B. Grote, Encinitas, Calif., and Robbie J. Sjostedt, Oregon, Wis., assignors to Stoughton Composites, Inc., Brodhead, Wis.

Filed Mar. 23, 1995, Ser. No. 409,183

Int. Cl.[6] B62D *33/04*

U.S. Cl. 296—187 17 Claims

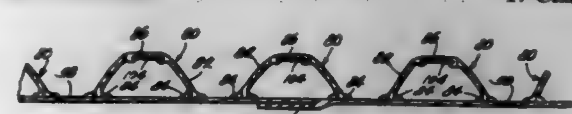

1. A vehicle body comprising

top, bottom, and opposite side walls interconnected to form a box-like structure, said side walls including a plurality of skin members, each of said plurality of skin members having edges, said skin members being arranged in edge to edge relation and being respectively adhesively bonded to one another to form a sheet-like side wall panel; and

a plurality of stiffeners for reinforcing said sheet-like side wall panel, each of said plurality of stiffeners having a rib member including a side portion being adhesively bonded to one of said skin members and having a crown portion spaced from said skin member, said side portion of each of said rib members being relatively deflectable and said crown portion of each of said rib members being relatively stiff, and each of said stiffeners being made of a nonmetallic material.

9. A vehicle body comprising

top, bottom, and opposite side walls interconnected to form a box-like structure, said side walls including a plurality of skin members, each of said plurality of skin members having edges, said skin members being arranged in edge to edge relation and being respectively adhesively bonded to one another to form a sheet-like side wall panel; and

a plurality of stiffeners for reinforcing said sheet-like side wall panel, said stiffeners being adhesively bonded to said skin members, and each of said stiffeners being made of a nonmetallic material, wherein each of said stiffeners has a parabolically shaped outer surface.

5,702,152

CONVERTIBLE ROCKER

Donald Shaw, 170 Commander Blvd., Agincourt, Ontario, Canada, M1S 3C8

Filed Mar. 14, 1996, Ser. No. 615,946

Int. Cl.[6] A47C *3/02*

U.S. Cl. 297—133 15 Claims

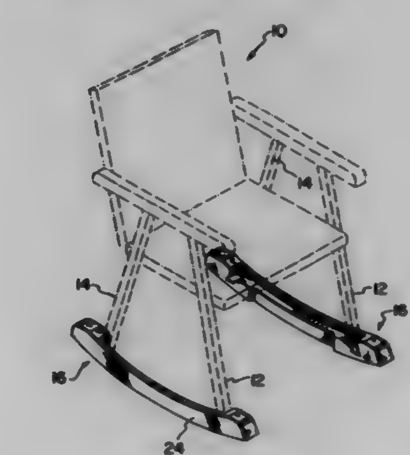

1. Rocking members for releasable mounting on a chair having front legs and rear legs each leg having a foot portion, said rocking members each comprising:

a top wall and an arcuate bottom wall in spaced relation and an inside wall and an outside wall in spaced relation, each rocking member having first channel means for releasably receiving at least a portion of a front foot of a chair;

second channel means in spaced relation to said first channel means for receiving at least a portion of a rear foot of said chair;

said channel means extending within said inside wall and said top wall, said channel means terminating short of said outside wall;

abutment means in each channel means for preventing lateral movement of a respective foot portion adjacent said abutment means;

first lock means for releasably locking at least a portion of each said foot in said channel means, said first lock means being independent of said abutment means;

second lock means for releasably locking a portion of said foot different from said first lock means, said second lock means being independent of said abutment means and said first lock means; and

third lock means for releasably locking a portion of said foot different from said first lock means and said second lock means, said third lock means being independent of said abutment means and said first lock means.

5,702,153

TAIL BONE CUSHION

Lee Pliska, 76 Rochampton Avenue, Apt. 202, St. Catharines, Ontario, Canada, L2M 7W5

Filed Jul. 11, 1996, Ser. No. 678,782

Int. Cl.[6] A47C *7/02*

U.S. Cl. 297—256.16 4 Claims

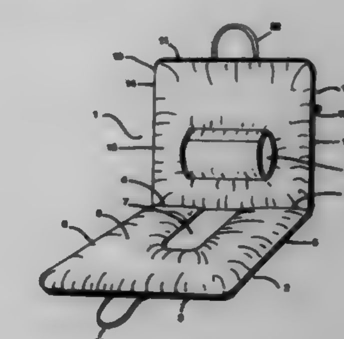

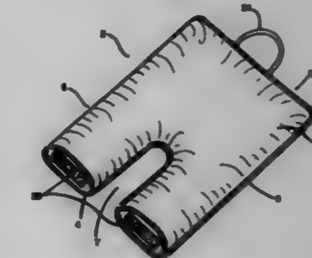

1. A tailbone cushion to eliminate discomfort of elderly or infirm patients afflicted with hemorrhoids, fissure, damaged coccyges (tailbone) or the like associated with sitting on hard surfaces for long periods, said tailbone cushion consisting of a cushion section having front, rear and side edges and tapered in thickness and firmness from the rear edge to the front edge, a cutout centrally disposed in the rear edge of said cushion section providing said cushion section with a U-shaped configuration; said cutout being sized and located to eliminate contact between the patient's tailbone and the cushion and the surface underneath the cushion, wherein said cushion section is formed from a waterproof and non-allergenic casing that will not cause sweating when in contact with a patient's skin, said casing filled with a layered odorless, non-allergenic, and resilient bonded polyester material that has low compression under a patient's body weight yet soft enough to permit sitting for extended periods with minimal discomfort, said tailbone cushion further including a back support hingedly connected to the said cushion section, whereby the tailbone cushion can be folded flat for storage and transport, said back support including a sleeve or pouch located on the front surface thereof, said sleeve or pouch adapted to removably retain a lower lumbar support or a hot or cold pack.

5,702,154
AIRLINE PASSENGER SEATS
Frank-Heinrich Schönenberg, Schwäbisch Hall Sulzdorf, Germany, assignor to Keiper Recaro GmbH & Co., Remscheid, Germany
Filed Sep. 10, 1996, Ser. No. 711,156
Claims priority, application Germany, Nov. 29, 1995, 195 44 486.8
Int. Cl.⁶ A47C *15/00*
U.S. Cl. 297—257 5 Claims

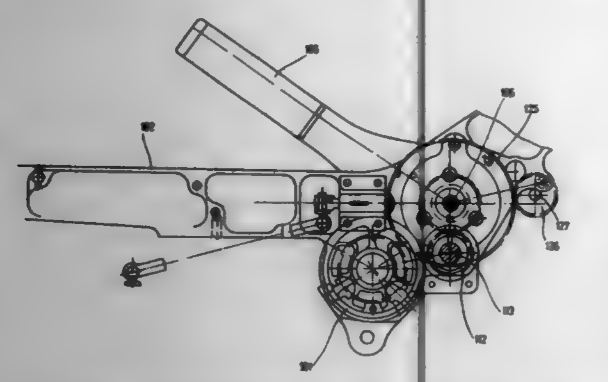

1. A series of passenger seats which have a seat frame common to all seats where at least one seat can be pushed lengthwise in relation to a neighboring seat between two positions in which the series of seats displays a maximum and minimum width and, in these positions, can be locked connected to a seat frame, comprising:

a lever movable in different swinging positions located at one end of seat dividers which separate individual seats, for locking or releasing said seats when the series of seats is adjusted to its minimal or maximum width;

an elongated shaft having a first section with a spline bore hub, and a second section which can shift axially in relation to the first section, said second section including a spline which meshes with said spline bore hub when connected;

a coupling device which connects the lever with said shaft; and whereby in the case of a transformation of three seats of normal width into two seats of enlarged width and vice versa, the side parts of seat backs of a middle seat can be connected alternatively with a middle part or with the seat backs of both outside seats.

5,702,155
POWER RECLINNING DEVICE FOR A SEAT
Sadao Ito, Anjyo, Japan, assignor to Aisin Seiki Kabushiki Kaisha, Japan
Filed Jul. 27, 1995, Ser. No. 508,337
Claims priority, application Japan, Jul. 29, 1994, 6-178251
Int. Cl.⁶ B60N *2/02*
U.S. Cl. 297—362.11 6 Claims

6. A power reclining device for use in a seat comprising:

a lower arm secured to a side rear portion of a seat cushion frame, said lower arm having a sub-bracket secured thereto;

an upper arm secured to a side lower portion of a seat back frame;

a reclining mechanism for tilting the upper arm with respect to the lower arm, the reclining mechanism having a rotatable shaft having eccentric and concentric portions, which passes through both arms, the rotatable shaft having a first end and a first axis, includes an internal gear provided on one of the upper arm and the sub-bracket and journalled on the eccentric portion of the rotatable shaft, and an external gear provided on the other of the upper arm and the sub-bracket and adapted for partially meshing engagement with the internal gear, the external gear being journalled on the concentric portion of the rotatable shaft;

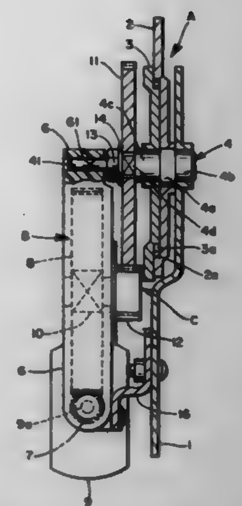

a pre-assembled driving mechanism for operating the reclining mechanism including an electric motor, reduction gearing connected to the electric motor, an intermediate shaft connected to the reduction gearing and having a second end and a second axis, and a single support member having a first hole to support the first end of the rotatable shaft and a second hole to support the second end of the intermediate shaft;

a pinion gear secured to the intermediate shaft; and

an input gear secured to the rotatable shaft and meshing with the pinion gear;

wherein a predetermined distance between the first axis of the rotatable shaft and the second axis of the intermediate shaft is defined by the support member so as to mesh precisely the input gear with the pinion gear.

5,702,156
RECLINING DEVICE
Genjiro Takagi, Akishima, Japan, assignor to Tachi-S Co., Ltd., Tokyo, Japan
Filed Feb. 17, 1995, Ser. No. 389,943
Int. Cl.⁶ B60N *2/02*
U.S. Cl. 297—367 18 Claims

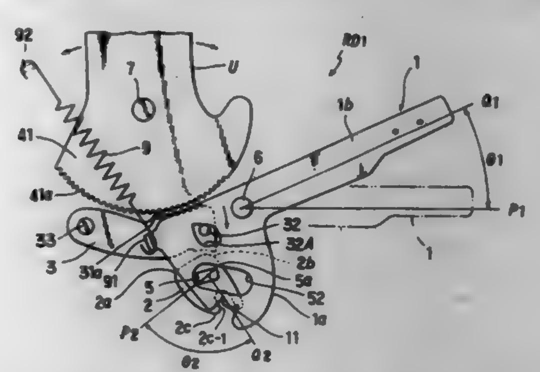

1. A reclining device for a seat, which includes an upper arm adapted to be fixed to a seat back of the seat and a lower arm adapted to be fixed to a seat cushion of the seat, said upper arm being rotatable with respect to said lower arm, said upper arm having a gear section at a lower end thereof, said reclining device comprising:

a lock gear means rotatable downward or upward on said lower arm to respectively permit meshed engagement or disengagement from said gear section, said lock gear means having a contact edge defined at a lower side thereof;

a cam means rotatably mounted on said lower arm adjacent to said lock gear means,

said cam means having a first center of rotation defined therein, and a first end portion and a second end portion, wherein said second end portion includes at least two different cam surfaces, each having a contact area upon which said contact edge of said lock gear means can be stably engaged;

said at least two different cam surfaces including a first cam surface spaced from said first center of rotation which rotates said lock gear means upwardly for the meshed engagement with said gear section and a second cam surface spaced from said first center of rotation to permit said lock gear means to be rotated downwardly for disengagement from said gear section;

an operation lever means rotatably provided on said lower arm, said operation lever means having a second center of rotation, a generally rectilinear section defined at a first end thereof and a downwardly expanding section defined at a second end thereof opposite to said first end, such that the second center of rotation is defined between said generally rectilinear section and said downwordly expanding section and is spaced from said first center of rotation;

said downwardly expanding section substantially overlapping said cam means; and

connecting means on said downwardly expanding section and said cam means for slidable and continuous engagement between said operation lever means and said cam means to rotate said cam means into meshed engagement or disengagement, whereby rotation of the operation lever means causes said lock gear means to be rotated upwardly and downwardly by rotation of said cam means so as to effect meshed engagement or disengagement between said lock gear means and said gear section;

wherein a guide means is provided between said lock gear means and said downwardly expanding section of said operation lever means in order to assist in downward rotation of said lock gear means for the disengagement from said gear section.

5,702,157
ADJUSTABLE ARMREST MECHANISM
John M. Hurite, West Bloomfield, Mich., assignor to Tachi-S Engineering, U.S.A., Inc., Farmington Hills, Mich.
Filed Aug. 23, 1996, Ser. No. 704,215
Int. Cl.⁶ A47C *7/54*
U.S. Cl. 297—411.38 1 Claim

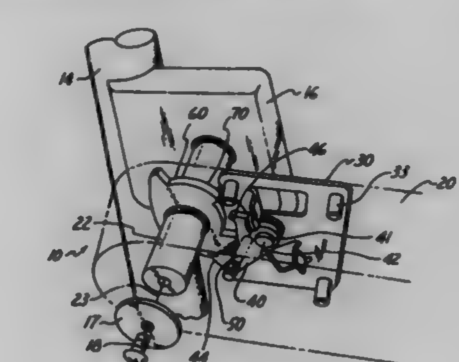

1. An adjustable armrest mechanism for use with a vehicle seatback, the adjustable armrest mechanism having a non-use position and a plurality of in-use positions, the mechanism comprising:

an armrest member being rotatably connected to a mounting feature for rotation about a first axis;

a pawl member being rotatably connected to the armrest member for rotation about a second axis between a first rotative position and a second rotative position, the pawl member having a first pawl projection at one end and a second pawl projection at a second end thereof;

a first stop fixed relative to the armrest member and engaged by the pawl member in the second rotative position;

a ratchet member being fixed to the mounting feature, the ratchet member having a camming surface for cooperative engagement with the pawl member;

the camming surface including:

a plurality of serrated teeth at a first end of the camming surface, engagement between the first pawl projection in the first position and the serrated teeth defining said plurality of in-use armrest member positions,

a second stop at a second end of the camming surface engaged by the second pawl projection in the second rotative position when the armrest mechanism is in the second position,

a first arcuate portion disposed between the first and second ends of the camming surface adjacent the second stop;

a second arcuate portion between the first arcuate portion and the serrated teeth having;

a recessed portion that is configured to provide clearance for the second pawl projection during rotation of the pawl from the second rotative position to the first rotative position and

a shoulder at an end of the recessed portion adjacent to the serrated teeth which engage the second pawl projection and causes the pawl to rotate to the first rotative position during relative rotation from the non-use position into any of the in-use positions and

a disengagement projection defining a step from the recessed portion to the first arcuate portion which engages the second pawl projection of the pawl member and causes the pawl to rotate to the second rotative position during relative rotation from any of the in-use positions into the non-use position; and

a spring member disposed between the pawl member and the armrest member rotatively biasing the pawl member to the first rotative position when the pawl is in the first rotative position;

wherein simultaneous engagement of the pawl member with the first stop and the second stop prevent further rotation of the pawl member thereby preventing rotation of the armrest member beyond the non-use position.

5,702,158
ARRANGEMENT IN STRUCTURAL ELEMENTS, FOR EXAMPLE FOR USE IN FURNITURE
Hans Chr. Mengshoel, Prinsesseallée 7, N-0275 Oslo, and Oddvin Rykken, Sven Bruns gate 3, N-0166 Oslo, both of Norway
PCT No. PCT/NO94/00138, § 371 Date Aug. 19, 1996, § 102(e) Date Aug. 19, 1996, PCT Pub. No. WO95/07641, PCT Pub. Date Mar. 23, 1995
PCT Filed Aug. 26, 1994, Ser. No. 615,260
Claims priority, application Norway, Sep. 16, 1993, 93.3308
Int. Cl.⁶ A47C *1/00;7/36*
U.S. Cl. 297—445.1 18 Claims

18. A furniture arrangement, comprising:

a base engageable with a supporting surface;

a support member extending from the base, wherein the support member includes a substantially continuous slit extending throughout at least a portion of the length of the support member, wherein the support member defines a pair of oppositely facing sides onto which the slit opens;

a user surface;

a first user surface supporting member to which the user surface is connected; and

a second user surface supporting member engaged with the first user surface supporting member through the slit, wherein the first user surface supporting member engages the support member adjacent a first one of the support member sides and the second user surface supporting member engages the support member adjacent a second one of the support member sides for supporting the user surface in a desired position on the support member.

5,702,159

CUSHION BODY STRUCTURE OF A CAR SEAT

Chikara Matsuoka, 33-15, Wada 3-chome, Tamano City, Okayama Prefecture 706; Takeshi Watadani, 564-A302, Kojima-Hiedacho, Kurashiki City, Okayama Prefecture 711; Kunihisa Wakimoto, 919-4, Kawairi, Okayama City, Okayama Prefecture 701-01, and Yukihiro Kinoshita, 4021-1, Tamashima-Michiguchi, Kurashiki City, Okayama Prefecture 713, all of Japan

PCT No. PCT/JP94/00684, § 371 Date Jun. 9, 1995, § 102(e) Date Jun. 9, 1995, PCT Pub. No. WO95/08507, PCT Pub. Date Mar. 30, 1995

PCT Filed Apr. 25, 1994, Ser. No. 446,596

Claims priority, application Japan, Sep. 19, 1993, 5-254797

Int. Cl.^{6} A47C *7/02*

U.S. Cl. 297—452.48 **8 Claims**

1. A vehicular seat cushion comprising, a cushioning material having a seating surface with a center portion and rising side portions to either side of said center portion, said center portion of said seating surface having a three-dimensional curved surface, a fastener body having an under surface affixed to said center portion of said seating surface and an upper surface duplicating said three-dimensional curved surface of said center portion of said seating surface, said upper surface of said fastener body having a plurality of fasteners disposed thereon, and a surface material covering said cushioning material and attached to said plurality of fasteners, whereby said surface material assumes said three-dimensional curved surface of said seating surface.

5,702,160

TOOL FOR CRUSHING HARD MATERIAL

Igor Anatolyevich Levankovskii, Leningradskii pr-t, d. 27, kv. 42, Moscow 125040; Yurii Alexandrovich Grinevitskii, ul. Fonivisina, d. 13, kv. 12, Moscow 127322; Victor Danilovich Shults, ul. Krasnii Mayak, d. 15, korp. 2, kv. 107, Moscow 113570, and Yurii Victorovich Alexandrov, poselok VUGI, d. 24, kv. 18, Miscovskaya oblast g. Luberzy 140004, all of Russian Federation

PCT No. PCT/RU95/00025, § 371 Date Aug. 16, 1996, § 102(e) Date Aug. 16, 1996, PCT Pub. No. WO96/25585, PCT Pub. Date Aug. 22, 1996

PCT Filed Feb. 16, 1995, Ser. No. 693,294

Int. Cl.^{6} F21C *35/183*

U.S. Cl. 299—111 **20 Claims**

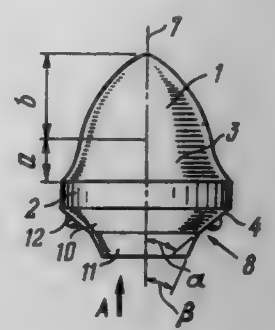

1. A tool for crushing hard material, comprising a housing and a hard-alloy insert mounted on the housing and having a head portion, a base with a thrust face for interaction with a supporting surface of the housing and an intermediate portion interposed between the head portion and the base and formed by a body of revolution with an outer lateral surface of concave shape, characterized in that the head portion of the insert is formed by a body of revolution with an outer lateral surface of convex shape, and the lateral side of said head portion of the insert is smoothly located adjacent to the lateral surface of its intermediate portion, the length of the intermediate portion of the insert about its longitudinal axis not exceeding the length of the head portion of the insert about the same axis.

5,702,161

MACHINE FOR REMOVAL OF MATERIALS FROM A SURFACE

Randal D. Finney, 7700 Hillview Ct., Tracy, Calif. 95378, and Robert D. Adamson, 351 Ewing Dr., Pleasanton, Calif. 94566

Filed Dec. 11, 1995, Ser. No. 570,725

Int. Cl.^{6} B32B *31/18;* **E21C** *47/00*

U.S. Cl. 299—37.1 **24 Claims**

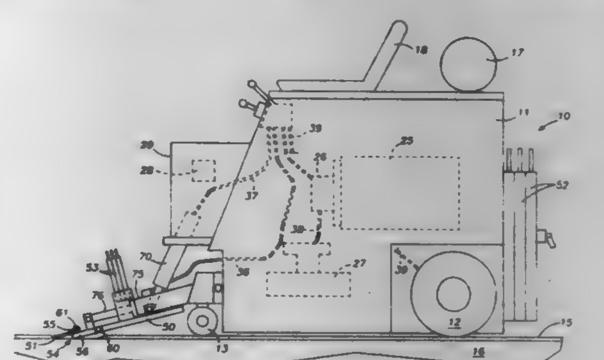

20. A machine for removing a material mounted to an underlying surface from said underlying surface, said machine comprising:

a frame body;

means for propelling said frame body relative to said surface;

a blade assembly carried by said frame body, said blade assembly being movable between a deployed position, for removal of said material from said surface, and a stored position, said blade assembly including a removal blade for removing said material from said surface;

at least one blade actuator mounted to said frame body and said blade assembly for adjusting the position of said blade assembly and securing said blade assembly in a selected position during oration of said machine:

a misting system carried by said frame body for spraying said material with a fluid prior to removal of said material from said surface.

5,702,162

LIVE SPINDLE FOUR WHEEL DRIVE MOTOR VEHICLE WHEEL END ASSEMBLY

John E. Pressler, Roanoke, Ind., assignor to Dana Corporation, Toledo, Ohio

Filed Mar. 30, 1995, Ser. No. 413,498

Int. Cl.^{6} B60B *27/00*

U.S. Cl. 301—105.1 **4 Claims**

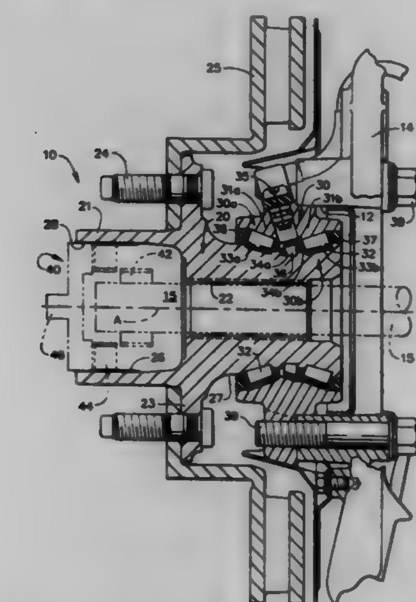

1. A live spindle four wheel drive motor vehicle wheel end assembly, comprising:

a live spindle having an outwardly extending barrel capable of receiving a hub lock mechanism, said live spindle includes an outer surface and is supported for rotation in a mounting member by a bearing assembly including a first row of tapered bearings and a second row of tapered bearings wherein said first row of tapered bearings and said second row of tapered bearings are circumferentially spaced about the outer surface of said live spindle;

said first row of tapered bearings and said second row of tapered bearings are positioned directly between an outer bearing race and said outer surface of said live spindle such that said live spindle acts as an inner bearing race for said first row of tapered bearings and said second row of tapered bearings of said bearing assembly; and

said live spindle includes a first circumferential groove on said outer surface of said live spindle which acts as said inner bearing race for said first row of tapered roller bearings and said live spindle includes a second circumferential groove on said outer surface of said live spindle which acts as said inner bearings race for said second row of tapered roller bearings and the cross-sectional configuration of said first circumferential groove and said second circumferential groove formed on said outer surface of said live spindle each include a flat bottom portion and two upstanding wall portions which are substantially perpendicular to said bottom portion.

5,702,163

METHOD AND APPARATUS FOR CONTROLLING A BRAKE SYSTEM OF A VEHICLE

Werner Stumpe, Stuttgart, Germany, assignor to Robert Bosch GmbH, Stuttgart, Germany

PCT No. PCT/DE95/01097, § 371 Date Feb. 13, 1996, § 102(e) Date Feb. 13, 1996, PCT Pub. No. WO96/08397, PCT Pub. Date Mar. 21, 1996

PCT Filed Aug. 19, 1995, Ser. No. 596,307

Claims priority, application Germany, Sep. 14, 1994, 44 32 642.4

Int. Cl.^{6} B60T *13/00*

U.S. Cl. 303—9.62 **10 Claims**

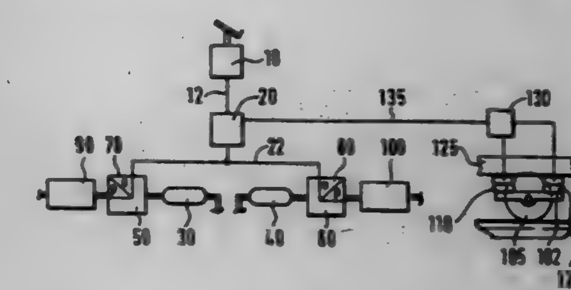

1. Method for controlling a brake system of a motor vehicle having a body which reacts to a braking action, said vehicle further comprising at least one axle which is mounted to said body by spring means, and wheels having brakes on each said at least one axle, said method comprising

determining a nominal value of a variable representing braking action at at least one wheel as a function of a command from the driver,

controlling the braking action at said at least one wheel on the basis of said nominal value,

measuring the reaction of the vehicle body to said braking action,

determining the onset of braking action at said at least one wheel based on the reaction of the vehicle body to said braking action,

detecting the value of said varisable when the onset of braking action is determined, and

correcting said nominal value at each said at least one wheel as a function of the value of said variable when the onset of braking is determined.

5,702,164

TRACTION CONTROL THROUGH CROSS-AXES OSCILLATION CONTROL

Minh N. Tran, and Davorin D. Hrovat, both of Dearborn, Mich., assignors to Ford Global Technologies, Inc., Dearborn, Mich.

Filed Mar. 5, 1996, Ser. No. 610,199

Int. Cl.^{6} B60T *8/58*

U.S. Cl. 303—139 **1 Claim**

1. A traction control system for a vehicle having an engine, brakes and a powertrain, said system providing additional traction by providing control of the brakes by alternately braking the driving wheels a different amount in a manner so as to reduce the total amount of wheel slip, comprising the steps of:

determining if a first driving wheel is spinning;

increasing braking of said first driving wheel;

determining if a second driving wheel is spinning above a predetermined amount;

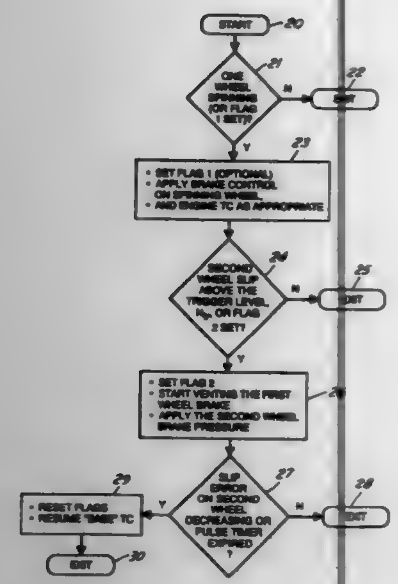

if yes, increasing braking of said second driving wheel for a predetermined pulse duration and completely reducing braking of said first driving wheel;
setting a predetermined second wheel slip trigger level;
setting a first flag if one wheel is spinning;
setting a second flag if the second wheel slip is above the trigger level;
determining if a slip error in the second wheel, expressed as a difference between the second wheel speed and a reference wheel speed, is decreasing below a predetermined level or if the predetermined pulse duration for increased braking of the second driving wheel has expired; and
resetting said first and second flags.

5,702,165
BEHAVIOR CONTROL SYSTEM OF VEHICLE DISTINCTIVE OF OVERSTEERED AND UNDERSTEERED CONDITIONS
Ken Koibuchi, Susono, Japan, assignor to Toyota Jidosha Kabushiki Kaisha, Aichi-ken, Japan
Filed Apr. 23, 1996, Ser. No. 634,695
Claims priority, application Japan, May 17, 1995, 7-142475; May 17, 1995, 7-142475
Int. Cl.⁶ B60K *28/16;* **B60T** *8/32*
U.S. Cl. 303—146 **12 Claims**

1. A behavior control system of a vehicle having wheels and a brake system for selectively braking each of said wheels, comprising:
means for detecting a behavior of the vehicle, said behavior including a yaw moment and a longitudinal force of the vehicle;
means for determining a target behavior of the vehicle, said target behavior including a target yaw moment and a target longitudinal force;
means for controlling said brake system so as to approach the behavior of the vehicle to said target behavior including approaching the yaw moment of the vehicle to said target yaw moment and approaching the longitudinal force of the vehicle to the target longitudinal force;
wherein said behavior control system further comprises:
means for judging whether the behavior of the vehicle is in an oversteered condition or an understeered condition, and
means for changing between the target yaw moment and the target longitudinal force as a controlling target behavior according to whether the behavior of the vehicle judged by said vehicle behavior judgment means is in the oversteered condition or the understeered condition.

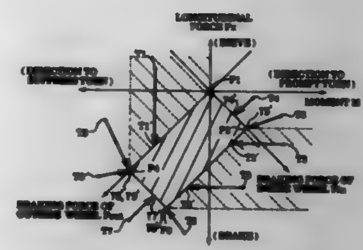

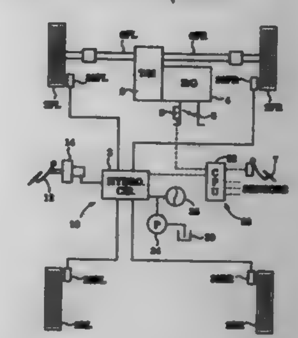

2. A behavior control system according to claim 1, wherein said vehicle behavior detecting means detects vehicle speed, lateral acceleration and yaw rate of the vehicle, and said controlling target behavior change means controls said target behavior determining means so as to determine the target yaw moment substantially based upon a slip angle of the vehicle deduced by calculating a change rate of the lateral acceleration as a difference between the lateral acceleration detected by said vehicle behavior detecting means and a product of the vehicle speed and the yaw rate both detected by said vehicle behavior detecting means, calculating a lateral slip velocity by integrating on time basis the lateral acceleration change rate, and calculating the slip angle as a ratio of the lateral slip velocity to the vehicle speed, when the behavior of the vehicle is judged as being in the oversteered condition.

5. A behavior control system according to claim 1, wherein said vehicle behavior detecting means detects vehicle speed, steering angle and yaw rate of the vehicle, and said target behavior determining means determines the target longitudinal force substantially based upon a deviation of a yaw rate calculated by a time based integration of a parameter proportional to a product of the vehicle speed and the steering angle both detected by said behavior detecting means from the yaw rate detected by said behavior detecting means, when the behavior of the vehicle is judged as being in the understeered condition.

5,702,166
INFORMATION KIOSKS
James Michael Lee, Windermere, Fla., assignor to Lockheed Martin Corporation, Bethesda, Md.
Filed Jun. 9, 1995, Ser. No. 489,315
Int. Cl.⁶ A47B *87/00*
U.S. Cl. 312—107 **15 Claims**

1. Apparatus comprising:
a cabinet structure including a first side wall, a second side wall, a door, a hinge for mounting the door to the first side wall near a front edge of the first side wall so that the door can swing between a closed position and a fully open position, and a lock for releasably securing the door in the closed position; and
a cart including a frame, a first shelf mounted on the frame, and means, attached to a base of the frame, for facilitating horizontal translation of the cart along a floor, a bottom portion of said cart being enclosed in, and an upper portion of said cart not being within, an interior space defined by the door when closed, and the first and second side walls, and being dimensioned such that the bottom portion can pass between the front

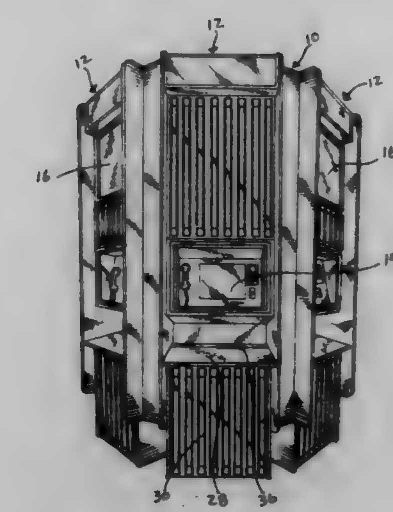

edges of the first and second side walls when the door is in the fully open position.

5,702,167
DRAWER LOCKING MEANS FOR DRAWERS ARRANGED ONE ABOVE THE OTHER
Hans Friedrich Müller, Ruppichteroth, Germany, assignor to Huwil-Werke GmbH, Ruppichteroth, Germany
Filed Aug. 8, 1995, Ser. No. 512,383
Claims priority, application Germany, Dec. 20, 1994, 94 20 359 U
Int. Cl.⁶ E05B *65/46*
U.S. Cl. 312—221 **10 Claims**

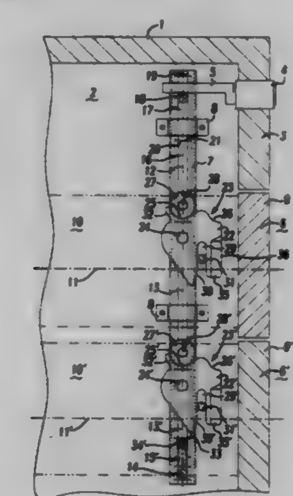

1. A drawer locking apparatus used with at least two drawers arranged one above the other in a body of a piece of furniture including a front panel, two side walls, a rear wall and, a base, the combination comprising:
locking slides on one side wall of the body, said locking slides transversely positioned with respect to sliding planes of the drawers, said locking slides are linearly adjustable along a setting axis in a guide, said guide having a front side and back side, said front side facing the front panel;
setting elements associated with said locking slides, said setting elements are fixed to the associated locking slide so as to be pivotable to a limited extent between an open position and a locking position around a pivot axis extending perpendicularly to the setting axis, said setting elements each including a setting slot extending parallel to the setting axis and said slots positioned between the drawer front panel and the front side of the guide in a pushed-in condition of the drawers;
a setting contour on each said setting element is in contact with setting stops of the adjoining locking slide, said setting contours include a first engagement region for holding the setting elements in the pushed-in position of the drawers and a second engagement region for holding the setting element of the operated drawer in a pivoted locking position to an open position of the operated drawer;
a control pin for actuating said setting elements, arranged at each of the side walls of the drawers positioned opposite the one side wall of the body, said control pin, when operating one of the drawers, is loadable for the purpose of adjusting a setting element;
stops for limiting the adjustment path of the locking slides, said locking slides are jointly loaded by a spring so as to be in contact with one of the stops; and
said control pin carried by each drawer, said control pins, in the pushed-in condition of the drawers, engage the setting slots of the setting elements, said locking slides of the drawers adjoining the locking slide of the operated drawer in the direction of the spring being displaced against a stop.

5,702,168
APPARATUS FOR DAMPING A DOOR OF REFRIGERATOR BEING OPEN AND/OR CLOSED
Jun-Chul Shin, Incheon, Rep. of Korea, assignor to Daewoo Electronics Co., Ltd., Seoul, Rep. of Korea
Filed Sep. 18, 1996, Ser. No. 715,242
Claims priority, application Rep. of Korea, Sep. 18, 1995, 95-30515
Int. Cl.⁶ A47B *96/04*
U.S. Cl. 312—405 **7 Claims**

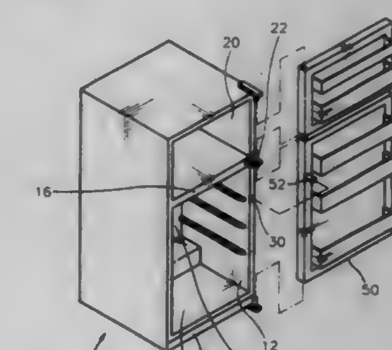

1. A damping apparatus for a refrigerator comprising:
a cabinet having side walls, a base plate, an upper plate, and a rear plate so as to form at least one compartment, a front of which is open, wherein an interior of said cabinet is filled with an insulating material, first and second spaces are formed in the interior of one of the side walls, a stopping protrusion is formed between the first and second spaces, and a slit which extends from an inner surface of the second space to a front surface of the side wall is formed so that the first and second space are in communicating relation with each other;
a door pivotally mounted on said cabinet so as to be closed or opened, wherein a protrusion for closing the first space is formed; and
damping means which is slidably and expandably mounted so as to dampen a reactive force generated by air between the compartment and said door when said door is opened and so as to dampen a negative pressure generated by the cooling of air in the compartment when said door is opened, wherein said damping means comprises a first damping member slidably mounted in the first space, wherein both ends thereof are open, a first end thereof is closed when the protrusion of said door is closed, an exhausting protrusion which slides in the first space and which is stopped by the stopping protrusion is formed and a first exhausting hole for exhausting the air of the interior thereof is formed in the exhausting protrusion, and a

second damping member slidably mounted in the second space and connected to a second end of the first damping member, wherein a second exhausting hole for exhausting the air in the interior thereof is formed.

5,702,169
FILM VIEWER FOR FILM HAVING MAGNETIC LAYER

Toru Nishimura, Asaka, Japan, assignor to Fuji Photo Film Co., Ltd., Kanagawa, Japan

Filed Nov. 17, 1995, Ser. No. 560,291

Claims priority, application Japan, Nov. 18, 1994, 6-285058

Int. Cl.⁶ G03B *21/43*

U.S. Cl. 353—25 **8 Claims**

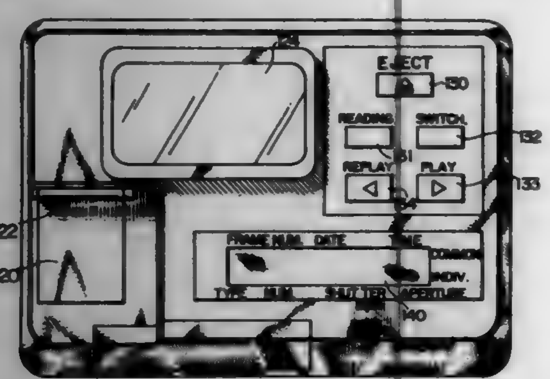

1. A film viewer for a film having a plurality of frames and a magnetic layer, the film viewer comprising:

a storage part for storing a film cartridge;

film supplying means, including a rotational axis engaged with a spool of the film cartridge and rotated by a motor for supplying the film;

film winding means, including a winding axis rotated by a motor, for winding the film;

a window used to observe an image of a frame of the film positioned between the film supplying means and the film winding means;

frame detection means for detecting a frame of the film and for generating a detection signal;

reading means for reading out magnetic information recorded in the magnetic layer of the film;

display means for displaying the read-out magnetic information; and

control means for controlling at least one of the film supplying means and the film winding means to transport the film such that an image of a detected frame is observed through the window in accordance with the detection signal of the frame detection means, and for controlling the display means to display the magnetic information corresponding to the film image to be observed through the window.

5,702,170
FIBER OPTICS CHRISTMAS TREE

James H. Broderick, 5701 Seifert Ave., San Jose, Calif. 95118

Filed May 28, 1996, Ser. No. 654,086

Int. Cl.⁶ F21V *8/00;* **F21P** *3/00*

U.S. Cl. 362—32 **1 Claim**

1. A fiber optics Christmas tree comprising:

a) a hollowed out artificial Christmas tree frame comprising a one piece hollow trunk, a plurality of hollow limbs extending from said hollow trunk, a plurality of hollow branches extending from each said hollow limb, a plurality of hollow twigs extending from each said hollow branch, a plurality of stems extending from said hollow limbs, branches, add twigs, and a plurality of fake evergreen needles extending about each said stem;

b) means for supporting said trunk in an upright position comprising a stand connected to a lower end of said hollow trunk;

c) means for transmitting light through said hollowed out artificial Christmas tree frame comprising a fiber optics bundle extending within said trunk with light carrying fibers from said bundle extending into and through said limbs, branches, twigs, and stems terminating outside of said limbs, branches, twigs and stems throughout said tree so that points of light can be seen at the distal ends of said fibers throughout said tree, said bundle terminating within said tree trunk above said stand forming a space below said bundle and above said stand;

d) means for supplying light to said light transmitting means comprising an illumination assembly within said tree trunk below said fiber optics bundle including a light socket, a high intensity light bulb carried in said light socket, means for supplying electricity to said light bulb, and first switch means mounted on the outside of said hollow tree trunk for turning on and off and dimming the light emitted by said light bulb; and

e) means for causing a color lighting effect comprising a rotatively mounted wheel located between said light bulb and said fiber optics bundle within said hollow tree trunk, said wheel having transparent color windows radially arranged, and means for rotating said wheel including a plurality of spaced apart legs extending downwards from the perimeter of said wheel, a ring affixed to lower ends of said legs with said ring centrally positioned about said light socket, and electric motor means having a drive shaft rotatively mounted to said ring to rotate said ring and wheel, including second switch means located on the outside of said hollow tree trunk for controlling the operation and speed of rotation of said wheel for changing the colors being delivered by said fiber optics bundle to and viewed at the distal ends of said fibers.

5,702,171
DEVICE FOR ILLUMINATING A SET OF EQUIPMENT ITEMS WHICH ARE MOUNTED ON A COMMON SUPPORT

Serge Claude Lenzi, Marseilles, France, assignor to Eurocopter France, Marseille-Provence, France

Filed Dec. 12, 1995, Ser. No. 571,240

Claims priority, application France, Dec. 12, 1994, 94 14908

Int. Cl.⁶ G01D *11/28*

U.S. Cl. 362—29 **13 Claims**

1. A device for illuminating a set (1) of equipment items (3) which are mounted on an outer face (2E) of a common support (2), which includes:

an electroluminescent plate (5) having an illuminating face and having a non-illuminating face, and being positioned so that said illuminating face (5I) of the electroluminescent plate (5)

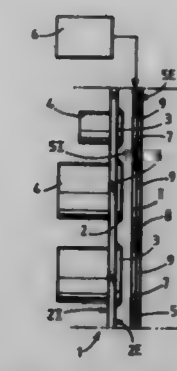

face said outer face (2E) of said common support (2), said electroluminescent plate occupying a fixed position, spaced away from said outer face, and said electroluminescent plate (5) being provided with a plurality of apertures (7), each of said plurality of apertures (7) having a periphery and each of said equipment items (3) being arranged so that it is aligned with one of said plurality of apertures (7) of said electroluminescent plate (5), each of said plurality of apertures (7) being approximately of equal size as the equipment item (3) to which it is aligned, and said electroluminescent plate (5) consisting of at least two electroluminescent panels (5A, 5B), imbricated so that each of said two electroluminescent panels (5A, 5B) can illuminate said equipment items (3) and wherein the periphery of each of said apertures (7) of said electroluminescent plate consists of consecutive portions (7A, 7B) belonging to said at least two electroluminescent panels (5A, 5B);

a facing (8), arranged on the non-illuminating face (5E) of said electroluminescent plate (5), opposite of said outer face (2E) of said common support (2), and also provided with a plurality of apertures (9), each of said plurality of apertures (9) of said facing (8) being approximately of equal size as the aperture (7) of said electroluminescent plate (5) to which it is adjacent; and

electrical power supply means (6) for said electroluminescent plate (5).

5,702,172
LIGHT EMITTING BICYCLE PEDAL

Robert Kilburn, 711 S. Montezuma, Apt. #3, Prescott, Ariz. 86303

Filed Feb. 22, 1994, Ser. No. 200,187

Int. Cl.⁶ B62J *6/00*

U.S. Cl. 362—72 **6 Claims**

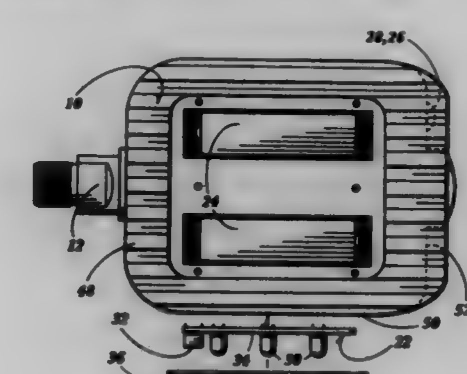

1. A light emitting bicycle pedal comprising: a one piece pedal body rotatably journaled on a pedal carrying shaft attached to a bicycle, said pedal body having an upper surface portion for supporting a foot of a cyclist and a rear surface portion comprising a portion of the pedal body which is parallel to the main axis of the pedal carrying shaft and faces toward the rear of the bicycle, said pedal body further having an outer surface portion which is perpendicular to the main axis of the pedal carrying shaft and located at the distal end of said pedal carrying shaft; said rear surface portion further housing a light emitting diode circuit comprising a plurality of light emitting diodes and a controllable electron valve connected to a circuit board, said light emitting diode circuit being attached to a first recessed cavity within said rear surface portion of said pedal body; said upper surface portion of said pedal body further having a second recessed cavity for housing an electric power source which is electrically connected to said light emitting diode circuit to supply electrical power to said light emitting diode circuit; said outer surface portion of said pedal body further having an electric switching means attached to a void on said outer surface portion of said pedal body, said electric switching means electrically connected to said light emitting diode circuit and said electric power source to control the supply of electrical power to said light emitting diode circuit, wherein said electron valve comprises an oscillating circuit such that the light emitting diodes flash when said light emitting diode circuit is energized.

5,702,173
VEHICULAR LAMP HAVING SIMPLIFIED STRUCTURE AND REDUCED CONDENSATION

Naoshi Kawamura, Shizuoka, Japan, assignor to Koito Manufacturing Co., Ltd., Tokyo, Japan

Filed Mar. 7, 1995, Ser. No. 399,637

Claims priority, application Japan, Mar. 9, 1994, 6-064411

Int. Cl.⁶ B60Q *1/04*

U.S. Cl. 362—80 **5 Claims**

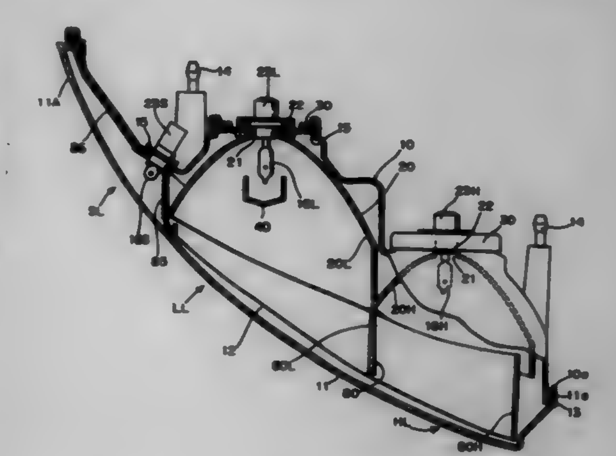

1. In a vehicular lamp in which a plurality of lamps and reflectors for each of said lamps are provided in a lamp body, and a lens is mounted on an opening of the lamp body and in which said lamps include at least one front lamp and a side lamp for illuminating a side portion of the vehicle, a far-most side portion of said side lamp extending substantially rearwardly of a bulb for said side lamp, the improvement wherein a reflector associated with said side lamp includes a non-planar reflecting portion disposed forwardly of said lamp for reflecting light emitted from said bulb towards said far-most side portion to thereby illuminate said side portion of said vehicle and supply heat to an associated far-most side portion of said lens.

5,702,174
ILLUMINATION DEVICE ARRANGED IN FRONT PART OF VEHICLE

Karl-Otto Dobler, Reutlingen, Germany, assignor to Robert Bosch GmbH, Stuttgart, Germany
Filed Dec. 15, 1995, Ser. No. 573,248
Claims priority, application Germany, Dec. 20, 1994, 44 45 772.1
Int. Cl.⁶ B60Q *1/04*
U.S. Cl. 362—80 **6 Claims**

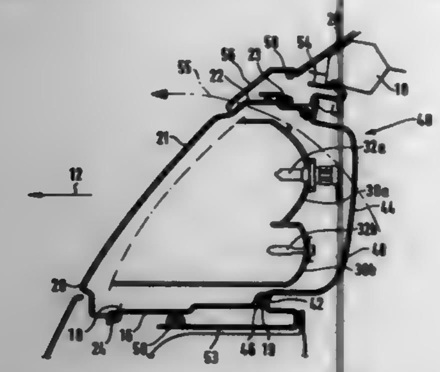

1. An illumination device assembly mounted on a vehicle, comprising a vehicle front part having a front part portion; and an illumination device including at least one reflector, at least one light source, a housing part at least partially surrounding said at least one reflector and said at least one light source and having a front side with a light outlet opening, and a light permeable cover disc connecting to said front side and closing said light outlet opening, said housing part being frame-shaped and having a rear side located opposite to said disc and being open, and said open rear side of said housing part having a circumferential edge which, when said housing part is mounted on said front part portion, comes to abutment against said front part portion of the vehicle, said front part portion provided with a wall located inside said circumferential edge of said housing part, and a closed chamber is formed by said housing part, said cover disc and said wall, and no additional closing part is needed to close said open rear side of said housing part, said at least one reflector and said at least one light source being arranged in said chamber.

5,702,175
MOVABLE LAMP DEVICE

Jenn-Hwang Chen, 58, Ma Yuan West St., Taichung, Taiwan
Filed Jul. 15, 1996, Ser. No. 679,790
Int. Cl.⁶ F21L *15/20*
U.S. Cl. 362—191 **1 Claim**

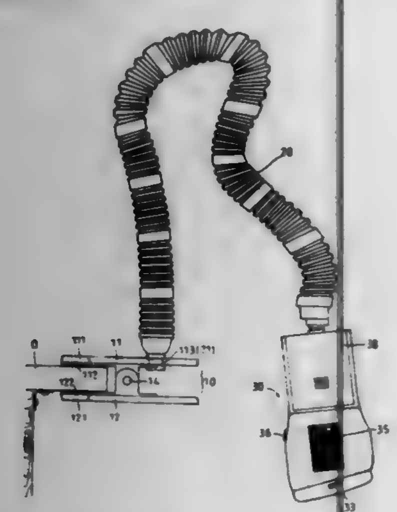

1. A movable lamp device comprising:

a clamp device, a lamp casing, and a flexible tube connecting said clamp device and said lamp casing;
said clamp device having a first clamp and a second clamp disposed under said first clamp;
said first clamp and said second clamp fastened pivotally to each other;
a threaded through hole formed on said first clamp;
two lower lobes disposed on two opposite sides of said first clamp;
an upper clamp portion disposed in a front of said first clamp;
two lower clips disposed beneath said upper clamp portion of said first clamp;
two upper lobes disposed on two opposite sides of said second clamp;
a lower clamp portion disposed in a front of said second clamp;
two upper clips disposed on said lower clamp portion of said second clamp;
a torsion spring disposed between two upper lobes;
a pin passing through said lower lobes, said torsion spring and said upper lobes;
said lamp casing having a first half housing and a second half housing coupling with said first half housing;
a main lamp disposed in a front of said lamp casing;
a flash lamp and a cell chamber disposed on a first side of said lamp casing;
a hook device disposed on a second side of said lamp casing;
a cell cover covering said cell chamber;
a switch disposed on a top portion of said lamp casing;
a threaded recess hole formed in a rear portion of said lamp casing;
a first threaded post disposed on a first end of said flexible tube;
a second threaded post disposed on a second end of said flexible tube;
said first threaded post inserted in said threaded through hole; and
said second threaded post inserted in said threaded recess hole.

5,702,176
MODULAR CONNECTOR DEVICE

Joseph D. Engle, Naperville, Ill., assignor to JJI Lighting Group, Inc., Greenwich, Conn.
Continuation-in-part of Ser. No. 516,208, Aug. 17, 1995, which is a continuation of Ser. No. 353,902, Dec. 12, 1994, abandoned. This application Feb. 26, 1996, Ser. No. 607,170
Int. Cl.⁶ F21S *3/14*
U.S. Cl. 362—219 **8 Claims**

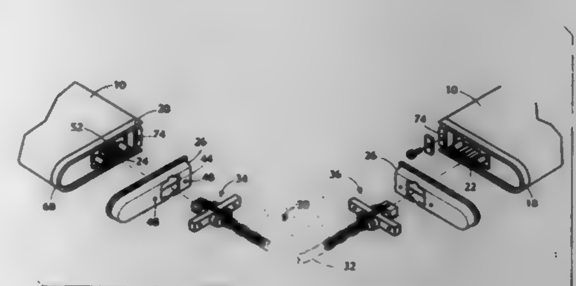

1. A connector device for electrically connecting at least two modular light units respectively having free ends including male and female double insulated electrical connector plug means mounted therein for electrically connecting said units directly together, said connector device comprising an electrical cable having opposed ends, male and female double insulated electrical connector plug means respectively mounted on the opposed ends of the cable, said connector plug means on the cable each having a connector portion, a body portion rearward of the connector portion and mounted on the cable end, and a pair of opposed laterally extending arms formed on the body portion rearward of said connector portion, a removable cover for the ends of said modular light units, including means for removably connecting the covers to the modular light units and said covers having knockout portions removably secured in the covers, said knockout portions being configured to define an opening in said cover for receiving one of the plug means on said cable, and means for removably securing the arms of the plug means to said cover.

5,702,177
ORBITAL LAMP

Ching-Yuan Lin, No. 8, Lane 30, Su Wei Road, Wu Ku Hsiang, Taipei Hsien, Taiwan
Filed Mar. 25, 1996, Ser. No. 620,552
Int. Cl.⁶ H01R *25/14*
U.S. Cl. 362—226 **3 Claims**

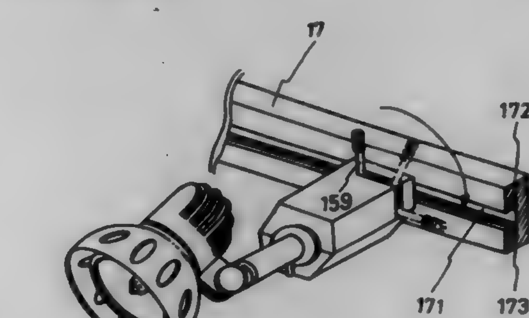

1. An orbital lamp comprising:

a top lid, a movable pivot, a bottom lid, a lamp fixture, a lamp body, and an orbital strip, wherein said lamp body includes contact terminals that are received in internal receptacles of said lamp fixture, said orbital strip includes a slot in a central area thereof, said slot includes a pair of electrically conductive strips therein;
said top lid includes a semi-circular opening on a rear side thereof which corresponds in location to a semi-circular opening on a rear side of said bottom lid, said top lid further includes an opening to receive a moving rod of said movable pivot, said top lid further includes a protrusion block with a through hole therein, and said top lid includes openings to receive protruding poles of said bottom lid, said bottom lid includes a supporting plate with a semi-circular opening on a top side thereof;
said movable pivot has a pair of electrically conductive slices and a pair of fastening plates, said movable pivot includes two protrusion rings spaced so as to fix said movable pivot in position on said supporting plate, said moving rod is affixed to said movable pivot, said movable pivot further includes an inlaid fastening plate on a rear end of said movable pivot, said inlaid fastening plate is inserted into said slot on said orbital strip, said movable pivot is rotated by said moving rod to affix said inlaid fastening plate in said slot of said orbital strip.

5,702,178
LAMP ASSEMBLY COMPRISING A VENTILATION PASSAGE

Alan Keith Smith, Staffordshire; John Frederick Monk, Birmingham, and Robert Frank Tolley, Staffordshire, all of Great Britain, assignors to Magneti Marelli UK Limited, Cannock, United Kingdom
PCT No. PCT/GB94/01483, § 371 Date Apr. 8, 1996, § 102(e) Date Apr. 8, 1996, PCT Pub. No. WO95/02783, PCT Pub. Date Jan. 26, 1995
PCT Filed Jul. 8, 1994, Ser. No. 583,112
Claims priority, application United Kingdom, Jul. 13, 1993, 9314465
Int. Cl.⁶ F21V *29/00*
U.S. Cl. 362—294 **10 Claims**

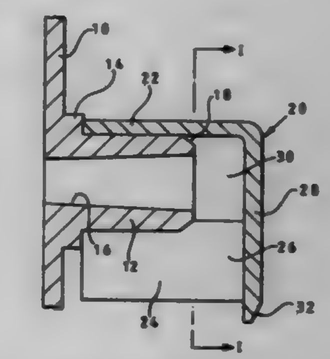

1. A lamp assembly comprising a housing for a light source having a light transmitting cover, and means defining a ventilating passage providing communication between an interior and an exterior of said housing, said means defining a ventilation passage comprising (i) a tubular portion which extends from said housing and which has a continuous side wall with a top end, and (ii) a cap which is mounted on said tubular portion and which has an end wall and spaced lateral walls, each lateral wall having a lower edge; wherein said cap is mounted on said tubular portion so that said end wall of said cap is spaced outward and apart from said top end of said tubular portion and is joined with said lateral walls of said cap so as to define a downwardly opening slot and wherein said end wall of said cap projects downwardly beyond said lower edges of said lateral walls of said cap and has a lower edge region which is chamfered on at least one surface of said end wall.

5,702,179
DISCHARGE LAMP HAVING LIGHT-TRANSMISSIVE CONDUCTIVE COATING FOR RF CONTAINMENT AND HEATING

Steven C. Sidwell, Hopkinton, N.H.; George J. English, Reading, Mass.; Robert L. Garrison, Henniker, and Ralph J. Johnson, Bedford, both of N.H., assignors to Osram Sylvania, Inc., Danvers, Mass.
Filed Oct. 2, 1995, Ser. No. 537,513
Int. Cl.⁶ F21V *9/00*
U.S. Cl. 362—255 **34 Claims**

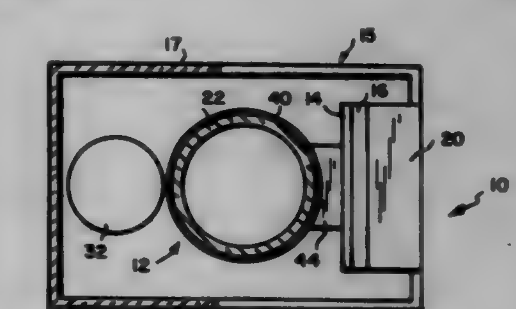

17. A discharge lamp comprising:

an elongated tubular lamp envelope containing a fill material for supporting a light-emitting discharge and electrodes mounted at opposite ends of said lamp envelope;
a substantially continuous, light-transmissive conductive coating on said lamp envelope for substantially attenuating emission of radio frequency energy during operation; and
a low impedance conductive strip on said lamp envelope along a substantial portion of its length, said conductive strip being in electrical contact with said light-transmissive conductive coating for coupling said conductive coating to a reference potential.

5,702,180
TABLE LAMP
Chih-Sung Huang, 19, Lane 111, Hoping Road, Louchou, Taipei, Taiwan
Filed Mar. 4, 1997, Ser. No. 805,908
Int. Cl.⁶ F21S *1/12*
U.S. Cl. 362—410 **2 Claims**

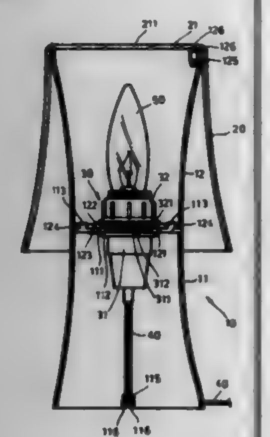

1. A table lamp, comprising:
a lamp stand comprising a pair of identical truncated cones, wherein one of the truncated cone is oppositely engaged with the other truncated cone and a peripheral surface of each of the truncated cones is curved which extends from a top of the truncated cone slightly outwardly to a bottom, and the top of each of the truncated cones is a junction surface, wherein a center of each of the junction surfaces is a central hole, and a plurality of raised portions and recessed portions formed on each of the junction surfaces respectively, when the truncated cones engage each other oppositely, the plurality of raised portions and recessed portions of the junction surface of one truncated cone firmly secure to the corresponding raised portions and raised portions of the junction surface of the other truncated cone;
a bulb socket assembly comprising a socket, a ring and a light bulb, wherein a predetermined length of power cable extends from a bottom of the socket through a hole of the truncated cone and secured there by two buckles of the truncated cone, and connects to an external power source, a switch provided on the power cable for turning on/off the table lamp, a circumferential flange is located on an outer surface of the socket, a mate screw thread is provided from the circumferential flange to the top of the outer surface of the socket, the ring has a corresponding circumferential flange formed on a bottom thereof and a female screw thread formed on the inner surface thereof, the socket is inserted through the central hole of the junction surface of the lower truncated cone and the central hole of the junction surface of the upper truncated cone and then the female screw thread of the ring cooperates with the male screw thread of the socket for threadly securing the socket, lower truncated cone, and upper truncated cone; and
a truncated cone shaped lamp shade, wherein a peripheral surface of the lamp shade is curved which expands from a top of the shade slightly outwardly to a bottom of the shade and a diameter of the top of the lamp shade substantially conforms to a diameter of the top of each of the truncated cones of the lamp stand, a surface formed on the top of the lamp shade thereby causes the lamp shade fitted onto the lamp stand.

5,702,181
PUG MILL WATER FLOW CONTROL SYSTEM
Ernest H. Wright, 78433 Prestwood La., Mooresville, N.C. 28115
Filed Oct. 13, 1995, Ser. No. 542,721
Int. Cl.⁶ B28C *7/12*
U.S. Cl. 366—40 **52 Claims**

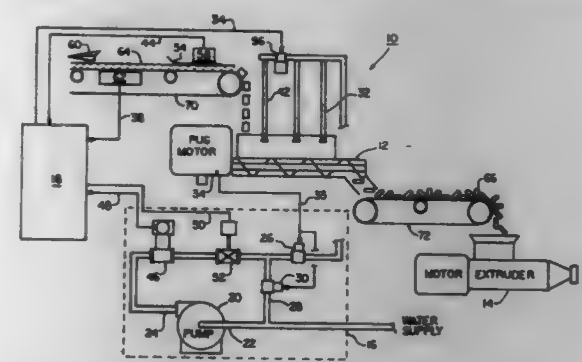

1. An apparatus for controlling the flow of water to a pug mill, said apparatus comprising:
(a) a pug mill for mixing water with a stream of clay feed material;
(b) a water supply system connected to said pug mill, said water supply system including a supply of water and a first control valve for controlling the flow of water to said pug mill;
(c) a moisture sensor for measuring the moisture content of said feed material upstream of said pug mill; and
(d) a controller connected between said moisture sensor and said first control valve for receiving a signal representative of a moisture content of said feed material and providing a control signal to said first control valve to control the flow of water to said pug mill;
wherein said water supply system further includes an inlet line connected to a supply of water; a pump connected to said inlet line; an outlet line connected between said pump and said pug mill; a return loop connected between said outlet line and said inlet line; and a flow bypass for selectively controlling the flow of water between said pug mill and said return loop.

5,702,182
APPARATUS FOR MIXING SELECTED VOLUMES OF LIQUIDS
Ulises R. Alvarado, King of Prussia, Pa., assignor to Instrumentation Technology Associates, Inc., Exton, Pa.
Filed Jul. 24, 1996, Ser. No. 685,567
Int. Cl.⁶ B01F *5/12*
U.S. Cl. 366—130 **9 Claims**

1. An apparatus for mixing selected volumes of liquids comprising:
a rigid tube having a cylindrical inner wall;
front piston means and rear piston means located within the tube in spaced relation to each other and in sealing relationship with the inner wall of the tube, each of said front and rear piston means preventing fluid communication from the space within the tube on each side thereof to the space within the tube on the other side thereof;
dividing means fixed within the tube at a location spaced from the front and rear pistons, for dividing the space within the interior of the tube between the front and rear pistons into at

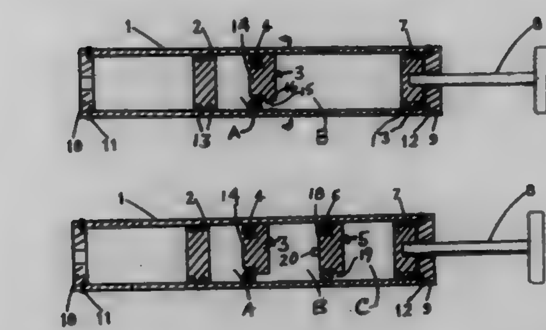

least two separate chambers, the dividing means including initially closed valve means, opening in response to a pressure differential across said dividing means, for allowing liquid to flow, past the dividing means, from one of said chambers into another when the rear piston is moved toward the dividing means; and
actuating means for causing the rear piston to move toward the dividing means.

5,702,183
DISCHARGE APPARATUS HAVING ORBITALLY MOVING DISCHARGE RING
Seppo Rasimus, and Heikki Tolvanen, both of Savonlinna, Finland, assignors to Saimatec Engineering Oy, Finland
Filed Apr. 11, 1995, Ser. No. 420,085
Claims priority, application Finland, Apr. 15, 1994, 941755
Int. Cl.⁶ B01F *15/02*
U.S. Cl. 366—195 **20 Claims**

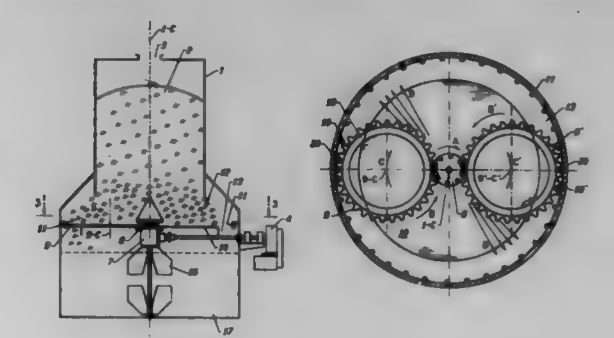

1. An apparatus for discharging material from a silo-like container having walls and an interior bottom member that defines an annular-opening between said interior bottom member and said walls, the apparatus comprising:
a rotatable discharge ring having an outer periphery and being disposed above said interior bottom member within said walled container, said discharge ring able to rotate about a first axis through its own center and to simultaneously orbit about a second axis;
at least one retaining member disposed within said walled container above said discharge ring adjacent a radially outermost orbit thereof for contact with said outer periphery of said discharge ring;
said at least one retaining member and said discharge ring cooperating such that rotation of said discharge ring about said first axis is promoted;
wherein motion of said discharge ring urges said material within said walled container radially outward toward said annular opening for discharge therethrough.

5,702,184
DEVICE FOR THERMALLY TESTING A TEMPERATURE CONTROL ELEMENT
Su-Fen Chang, P.O. Box 90, Tainan, 704, Taiwan
Filed Jul. 9, 1996, Ser. No. 677,388
Int. Cl.⁶ G01K *15/00*
U.S. Cl. 374—1 **5 Claims**

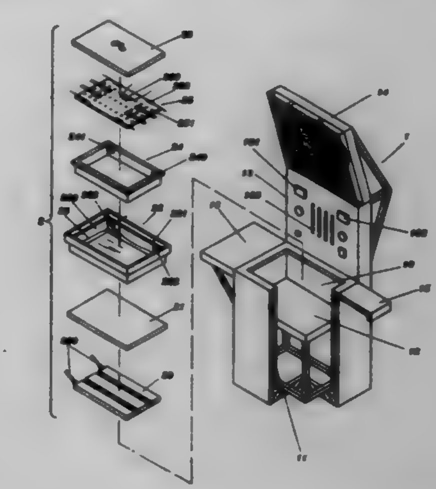

1. A temperature control element testing assembly comprising:
a table having an open upper side and an inner hollow surrounded by a bottom wall and four side walls;
a testing device situated in said inner hollow of said table, the testing device including:
a heater having a flat shape;
a heat conductive plate placed on said heater;
a lower case having an open upper side, a bottom wall and four side walls, and an inner hollow defined by said bottom wall and said four side walls, said bottom wall of said lower case contacting an upper surface of said heat conductive plate;
a heat transmitting fluid contained in said inner hollow of said lower case;
an upper case having an open upper side, an open bottom side, and four side walls, said upper case being placed on an upper section of said lower case;
a testing plate having a flat shape, said testing plate being welded to lower ends of said four side walls of said lower case, wherein a bottom of said testing plate is immersed in said heat transmitting fluid; and
an upper lid for closing said open upper side of said upper case; and,
wherein said heater is arranged heated to be heated by electricity, said heat conductive plate is heated by said heater and transmits heat in an even and balanced manner to said heat transmitting fluid contained in said lower case, and said heat transmitting fluid transmits heat in an even and balanced manner to said testing plate, so that at least one temperature control element located on said testing plate is heated to a preset lowest limit and highest limit of temperature so as to the test temperature control characteristics of said temperature control element in an accurate and speedy way.

5,702,185
HEAT FLOW TRANSDUCER
Morgan Heikal, Brighton, United Kingdom, assignor to P. A. Hilton Limited, Hampshire, United Kingdom
Filed Aug. 9, 1994, Ser. No. 287,815
Int. Cl.⁶ G01K *7/02;17/00*
U.S. Cl. 374—29 **15 Claims**

1. A heat flow transducer in combination with a specimen material for measuring thermal conductivity of the specimen mate-

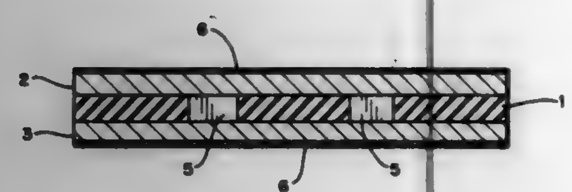

rial, said transducer being located thermally in series with said specimen material, said transducer comprising:
- a core of heat resistive material having opposed faces, comprising a first heat flow path;
- two heat conductive plates in thermal contact with the opposed faces;
- at least one thermoelectric cooler set into a corresponding aperture in the core comprising at least one thermal resistance comprising a second heat flow path between the conductive plates in parallel with the first heat flow path; and
- electrical interconnections to said at least one thermoelectric cooler to derive an electrical response to a thermal flux through the transducer from one plate to the other, said heat resistive material having a selected thermal conductivity, said selected thermal conductivity comprising a means for adjusting the heat flow sensitivity of said transducer.

5,702,186

JOURNAL BEARING WITH LEADING EDGE GROOVE VENT

Louis F. Hackstie, Lake Mary, and Peter J. Clayton, Casselberry, both of Fla., assignors to Westinghouse Electric Corporation, Pittsburgh, Pa.

Filed Aug. 2, 1996, Ser. No. 691,728
Int. Cl.⁶ F16C *17/03*
U.S. Cl. 384—117 **18 Claims**

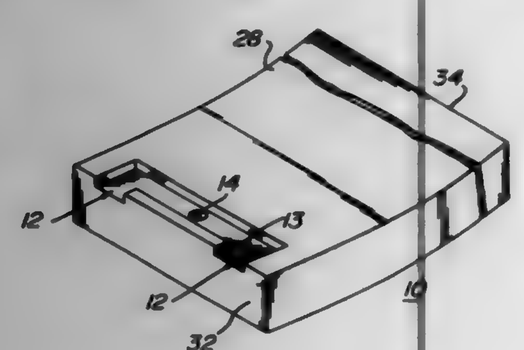

1. A shoe segment for a journal bearing comprising:
- a leading edge;
- a bearing surface for supporting a rotating shaft;
- a supply groove recessed into the bearing surface; and,
- at least one bleed vent extending from said supply groove to the leading edge of the shoe segment such that oil entering the supply groove can bleed through the leading edge in a circumferential path substantially perpendicular to the leading edge and perpendicular to the axis of rotation of the rotating shaft.

5,702,187

GUIDE RING FOR ROLLER BEARING

Michael Weigand, Elferehausen; Werner Ganss, Schweinfurt, and Martin Grehn, Dittelbrunn, all of Germany, assignors to FAG OEM und Handel AG, Germany

Filed Jan. 23, 1997, Ser. No. 789,305
Claims priority, application Germany, Jan. 24, 1996, 196 02 372.6
Int. Cl.⁶ F16C *33/58*
U.S. Cl. 384—551 **17 Claims**

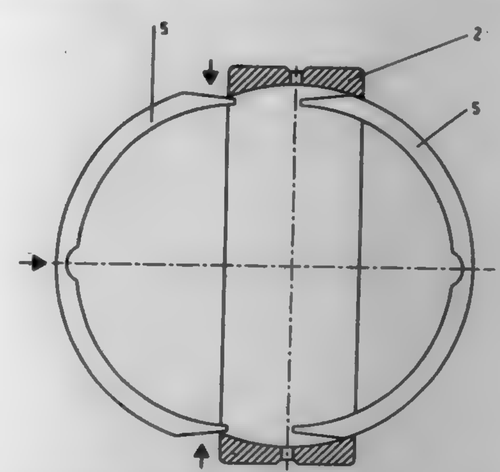

1. An antifriction bearing comprising:
- an inner ring, an outer ring, the rings having opposing races;
- at least one row of rolling bodies between the rings and shaped for engaging and rolling along the races;
- a separator in the space between the races and separating the rolling bodies;
- at least one guide ring in the space between the inner and outer races and shaped to be guided on one of the ring races for guiding at least one of the rows of rolling bodies and the separator;
- the guide ring comprising at least two ring segments, each ring segment being of a length less than the entire circumference of the bearing and the segments being positioned in the bearing so as to not be entirely overlapping circumferentially; the ring segments being arranged loosely along at least one lateral side of the rolling bodies in the at least one row, and the ring segments being shaped and sized to be held in form locked manner to the surface of the one ring race.

5,702,188

THERMAL HEAD AND HEAD DRIVE CIRCUIT THEREFOR

Toshiya Watanabe; Masatoshi Noguchi; Takeshi Toyosawa, and Minoru Morita, all of Yokohama, Japan, assignors to Graphtec Corporation, Yokohama, Japan

Filed Jul. 11, 1996, Ser. No. 678,677
Claims priority, application Japan, Jul. 18, 1995, 7-203898; Sep. 13, 1995, 7-260841; Sep. 13, 1995, 7-260842
Int. Cl.⁶ B41J *2/355*
U.S. Cl. 400—120.05 **3 Claims**

1. A thermal head which has a thermal resistance member formed in a straight form, comprising:
- a first lead conductor group having a plurality of first lead conductors which are connected to said thermal resistance member;
- a second lead conductor group having a plurality of second lead conductors which are connected to said thermal resistance member, said first lead conductors and said second lead conductors being alternately arranged at a given interval;
- a third lead conductor group connected to said thermal resistance member between said first and second lead conductor groups; and

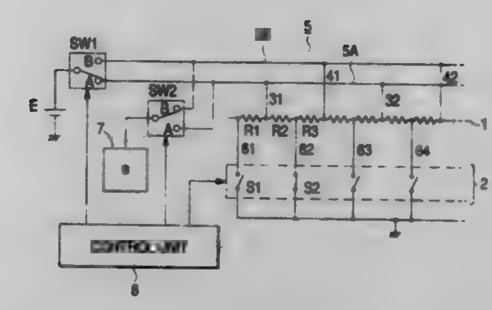

- selecting means having a first selecting mode for selecting said first lead conductor group and a second selecting mode for selecting said second lead conductor group;
- wherein when said selecting means selects said first selecting mode, a region of said thermal resistance member sandwiched by said first lead conductor group and said third lead conductor group is operated, and when said selecting means selects said second selecting mode, a region of said thermal resistance member sandwiched by said second lead conductor group and said third lead conductor group is operated;
- wherein said selecting means includes a power source for applying a driving potential "E" to said first lead conductor group during the first selecting mode, and for applying a driving potential "E" to said second lead conductor group during the second selecting mode;
- wherein said selecting means includes potential applying means for applying a potential other than 0 to said second lead conductor group during the first selecting mode, and for applying a potential other than 0 to the first lead conductor group during the second selecting mode; and
- wherein said potential applying means feeds back said potential given to said second lead conductor group to set said potential to a predetermined value "e" during the first selecting mode, and feeds back said potential given to said first lead conductor group to set said potential to a predetermined value "e" during the second selecting mode.

5,702,189

RACK AND PINION CLEANING MECHANISM IN A SERIAL PRINTER

Minoru Mizutani; Kunihara Hayashi, and Koji Aida, all of Tokyo, Japan, assignors to Oki Electric Industry Co., Ltd., Tokyo, Japan

Filed Dec. 15, 1994, Ser. No. 356,818
Claims priority, application Japan, Dec. 24, 1993, 5-327368
Int. Cl.⁶ B41J *19/20*
U.S. Cl. 400—328 **18 Claims**

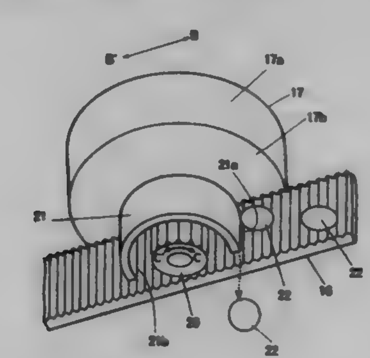

1. A serial printer, comprising
- a carriage on which a print head is mounted, and which is capable of translation movement;
- pull tractors for feeding sprocket paper past the printing head;
- a pinion rotatably mounted to the carriage;
- a rack meshing with the pinion at a meshing region therebetween, the rack having teeth with peaks; and
- a dislodging member having an edge proximate to the peaks of the teeth of the rack and provided adjacent to the pinion, the edge of the dislodging member and the peaks of the teeth of the rack defining a gap therebetween, whereby said dislodging member serves to remove, by means of said edge, chads released from said sprocket paper, attached to the rack, and approaching the meshing region between the rack and the pinion, the gap between the edge of the dislodging member and the peaks of the teeth of the rack being set to permit engagement of the edge of the dislodging member with the chad, when the chad projects away from the surface of the rack, to thereby enable removal of the chad by said engagement of said edge of the dislodging member with the chad.

5,702,190

DOT-MATRIX LINE PRINTER

Osamu Shimizu, Kawasaki; Kazuya Harada, Kakogawa; Shinichi Wada, Kawasaki; Tetsuya Fujimoto, Kato-gun, and Takanari Inui, Kawasaki, all of Japan, assignors to Fujitsu Limited, Kawasaki, Japan

Filed Jul. 22, 1996, Ser. No. 684,624
Claims priority, application Japan, Jan. 8, 1996, 8-000866
Int. Cl.⁶ B41J *19/08*
U.S. Cl. 400—341 **4 Claims**

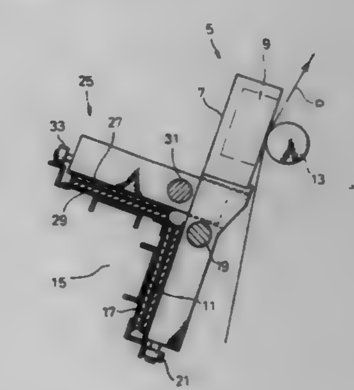

1. A dot-matrix line printer comprising:
- a printing shuttle which reciprocally moves to carry out a printing operation, and a balancing shuttle which moves in a direction opposite to the direction of the movement of the printing shuttle, wherein a cross section of the printing shuttle perpendicular to the direction of movement is elongated in a first direction and a cross section of the balancing shuttle perpendicular to the direction of movement is elongated in a second direction, different from said first direction, and
- wherein the balancing shuttle is at least partly inserted in the second direction into the printing shuttle so as not to interfere with the latter upon printing, so that the center of gravity of the balancing shuttle is located as close to the center of gravity of the printing shuttle as possible.

5,702,191

SHEET FEEDING FORCE CONTROL IN A MULTIPLE INPUT PATH SHEET FEEDING APPARATUS

Masaaki Kakizaki, Kawasaki; Hirofumi Hirano, Yokohama, and Toshihiko Bekki, Kawasaki, all of Japan, assignors to Canon Kabushiki Kaisha, Tokyo, Japan

Continuation of Ser. No. 39,688, Mar. 29, 1993, abandoned, which is a continuation of Ser. No. 645,483, Jan. 24, 1991, abandoned. This application Dec. 2, 1994, Ser. No. 353,392
Claims priority, application Japan, Jan. 30, 1990, 2-020150; Jan. 30, 1990, 2-020151
Int. Cl.⁶ B41J *11/50*
U.S. Cl. 400—582 **53 Claims**

1. A sheet feeding apparatus comprising:

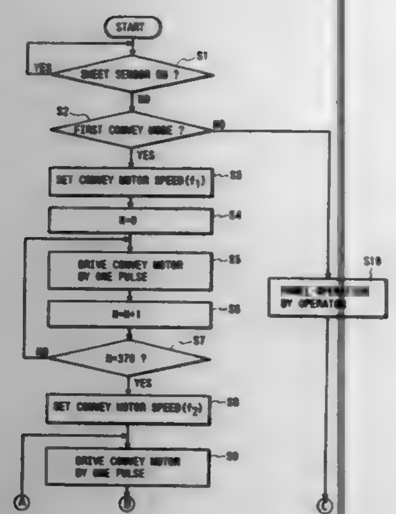

conveying means having a convey roller for applying a conveying force to a sheet;
first guide means for guiding the sheet to which the conveying force is applied by said conveying means;
second guide means against which a tip end of the sheet guided by said first guide means abuts, for guiding the sheet in a direction changing an advancing direction of the sheet, and forming a first path together with said first guide means, wherein in the first path the sheet is conveyed by said conveying means;
third guide means, forming a second path joining to the first path at a position downstream of said first guide means and upstream of said second guide means, for guiding a sheet to said second guide means; and
control means for controlling said conveying means so that the conveying force of said conveying means is increased from an initial value when a tip end of the sheet that is being guided by said first guide means reaches a first predetermined position upstream of said second guide means without interrupting sheet conveyance, and is returned to the initial value when the tip end of the sheet that is being guided by said second guide means reaches a second predetermined position downstream of an abut position where the sheet abuts said second guide means, thereby feeding the sheet to a third predetermined position under the initial conveying force.

5,702,192
TAPE CARTRIDGES
Kunihiko Matsuhashi; Hideo Sodeyama, and Daisuke Inakoshi, all of Suwa, Japan, assignors to Seiko Epson Corporation, and King Jim Co., Ltd., both of Tokyo, Japan
Filed Aug. 9, 1995, Ser. No. 513,139
Claims priority, application Japan, Aug. 9, 1994, 6-209172
Int. Cl.^{6} **B41J** *11/58*
U.S. Cl. 400—613 **12 Claims**

1. A set of tape cartridges including at least two types of tape

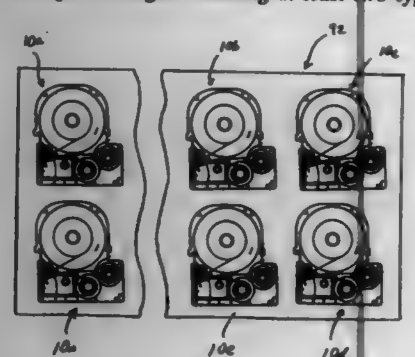

cartridges which can be mounted in and removed from a printing apparatus having a printing head, and which accommodate printing tapes having at least two different types of hardness, with each of said tape cartridges comprising:
a printing tape having a particular hardness selected from at least two different types of said hardness; and
a platen for nipping said printing tape in cooperation with said printing head in such a manner that printing can be conducted on said printing tape when said tape cartridge is mounted in said printing apparatus, with said platen having rubber disposed on a surface thereof,
the hardness of said platen rubber for a particular cartridge of the set being determined such that the platen rubber provided in the tape cartridge for accommodating the printing tape is softer than the platen rubber provided in a tape cartridge which accommodates a softer printing tape.

5,702,193
SIDE KNOCK TYPE MECHANICAL PENCIL
Hidehei Kageyama; Tomiji Ueki, and Yoshihide Mitsuya, all of Kawagoe, Japan, assignors to Kotobuki & Co.,Ltd., Kyoto, Japan
Division of Ser. No. 327,549, Oct. 24, 1994, abandoned. This application Dec. 31, 1996, Ser. No. 775,167
Claims priority, application Japan, Jul. 22, 1994, 6-191293; Sep. 27, 1994, 6-267965
Int. Cl.^{6} **B43K** *21/00*
U.S. Cl. 401—65 **12 Claims**

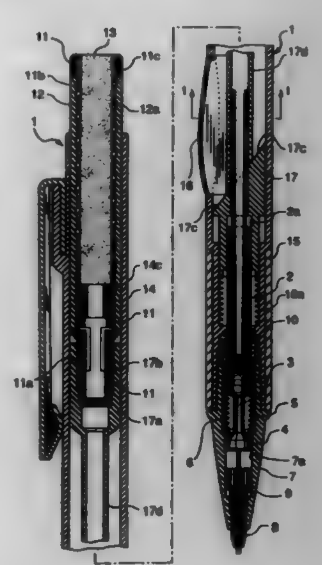

1. A side-knock mechanical pencil comprising:
a generally cylindrical, hollow shell extending from approximately the front end of the pencil to the rear end of the pencil;
chuck means disposed within said cylindrical shell near the front end thereof to advance a pencil lead out of the front end of the pencil upon side-knock operation;
a generally elongated slide member disposed within said shell and connected at a front end thereof to said chuck means, said slide member being axially movable within said shell relative to said shell and formed as a one-piece molded member, said slide member comprising a slanted portion having a surface that is angled relative to a longitudinal axis of said slide member, a lead passageway extending through said slanted portion, and a large-diameter portion at a rear end of said slide member, said large-diameter portion having an outer diameter substantially equal to the inner diameter of said shell;
means for preventing rotational movement of said slide member relative to said shell;
a first biasing member disposed within said cylindrical shell to bias an assembly comprising said chuck means and said slide member backward; and

a knock lever disposed within a side of said shell in position to abut said angled surface of said slide member so that when said knock lever is pressed, side-knock operation is effected against the biasing action of said first biasing member.

5,702,194
CLEANER
Shih Hsiung Hsu, P.O. Box 90, Tainan 704, Taiwan
Filed Jul. 8, 1996, Ser. No. 677,685
Int. Cl.^{6} **A46B** *11/06*
U.S. Cl. 401—136 **2 Claims**

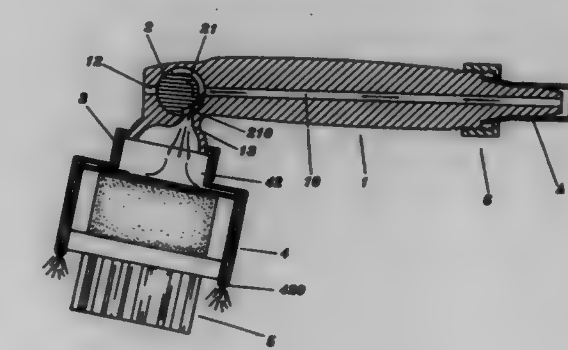

1. A cleaner comprising:
a) a main body including a front end, a longitudinal water passageway extending therethrough, a straight outlet in the front end, a guide recess, a spray outlet in a lower wall below the guide recess, an annular contact flange below the spray outlet, and a rear end for engagement with a water supply tube;
b) a flow guide disposed within the guide recess, the flow guide including an L-shaped flow groove on a peripheral surface thereof, the flow guide being rotatable within the guide recess for selective disposition between any one of three different water flow positions, including terminating water flow, permitting water flow through the straight outlet and permitting water flow through the spray outlet;
c) a rectangular-shaped cover including four side walls and an upper wall defining an inner chamber having an open bottom side, the walls each including an outer layer spaced from an inner layer, the spaces between the inner and outer layers collectively defining an inner annular space terminating in a plurality of outlet holes around a lower circumferential edge of the side walls, a threaded annular projection extending from the upper wall for receiving water flow from the main body and directing same through the inner annular space and out the outlet holes;
d) a threaded fixing ring disposed in an engagement with the annular contact flange of the main body and in threaded engagement with the threaded annular projection of the cover for securing the main body to the cover and permitting the cover to be rotated relative to the main body;
e) a cleaning block disposed within the inner chamber of the cover, the block including an engaging member for detachably securing the block to the inner chamber, a brush and a sponge extending from opposite sides of the engaging member and the block being invertible for selectively disposing the brush or the sponge in a downwardly facing position of use; and
f) a constriction ring engageable with the rear end of the main body for securing a water supply tube thereto.

5,702,195
WASHING BRUSH
Jeffrey Alan Rittenbaum, Atlanta, Ga., assignor to Max Rittenbaum, Inc., Atlanta, Ga.
Filed Feb. 15, 1996, Ser. No. 601,869
Int. Cl.^{6} **A46B** *11/06*
U.S. Cl. 401—289 **13 Claims**

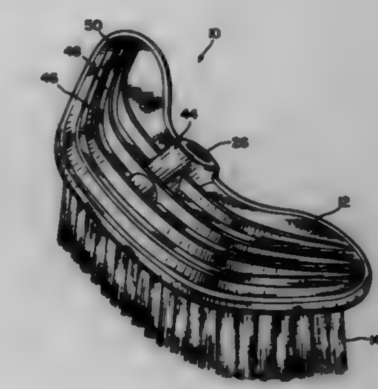

1. A washing brush comprising:
a brush body,
a washing body secured to a bottom of said brush body,
said brush body including a central portion and two wing portions located on opposite sides of said central portion and extending away from said central portion from a common edge of said central portion,
said two wing portions with said central portion forming a collection pocket for collecting water and funnelling the water in a direction of movement of said brush body,
a water inlet to said brush body located at said edge of said central portion, said water inlet being located on and said two wing portions extending away from a same side of said central portion, and
an upper surface of said brush body including a plurality of ridges following a contour of said central portion and said two wing portions.

5,702,196
TURNBUCKLE-TYPE ADJUSTABLE LINK
Douglas W. Petercsak, Fillmore, Calif., assignor to Teleflex, Incorporated, Plymouth Meeting, Pa.
Filed Jun. 21, 1996, Ser. No. 667,426
Int. Cl.^{6} **F16B** *7/06*
U.S. Cl. 403—46 **18 Claims**

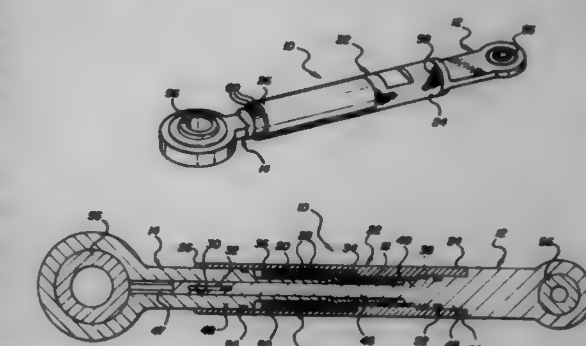

1. An adjustable link assembly (10) comprising:
first and second axially aligned rods (12 and 14);
a turnbuckle (16) having a first end (18) threadedly engaging said first rod (12) and a second end (20) threadedly engaging second rod (14) for axially adjusting said rods (12 and 14) relative to one another upon rotation of said turnbuckle (16);

an adjustment sleeve (22) having first and second ends (24 and 26) and in sliding and non-rotatable relationship with said turnbuckle (16);

said assembly characterized by said sleeve (22) being in sliding engagement with said first rod (12); said first end (24) of said sleeve (22) and said first rod (12) including a mechanical lock for movement between a locked position in which said sleeve (22) is prevented from rotating relative to said first rod (12) and an unlocked adjustment position in which said sleeve (22) is free to rotate relative to said first and second rods (12 and 14) while remaining in said non-rotatable relationship, and in contact, with said turnbuckle (16) to rotate said turnbuckle (16) relative to said first and second rods (12 and 14) and axially adjust said rods (12 and 14) when in said adjustment position and so that said turnbuckle (16) is prevented from rotating relative to said first rod (12) to prevent said axial adjustment when said sleeve (22) is in said locked position.

5,702,197

STRUCTURE OF PIVOT JOINT

Guei-Rung Chen, Hsin Chuang, Taiwan, assignor to Chih Ching Industry Ltd., Hsin Chuang, Taiwan

Filed Jul. 1, 1996, Ser. No. 673,090

Int. Cl.⁶ F16B *7/10;* **F17C** *11/00;* **H05K** *7/00*

U.S. Cl. 403—166 **4 Claims**

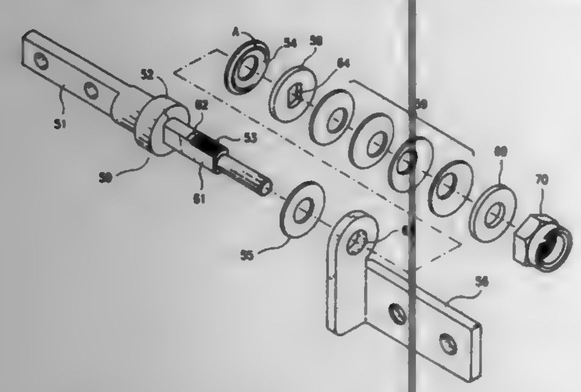

1. A pivot joint comprising a pivot bolt having an elongated flat mounting rod section at one end, a screw rod section at an opposite end, said screw rod section having two longitudinal planes at two opposite sides, and a collar between said flat mounting rod section and said screw rod section, a mounting frame rotatable about said screw rod section, a lock nut in threaded engagement with said screw rod section, a first packing ring mounted around said screw rod section and disposed between said collar and said mounting frame, a second packing ring mounted around said screw rod section and disposed between said mounting frame and said lock nut, a locating ring mounted around said screw rod section and disposed between said second packing ring and said lock nut and rotatable by said pivot bolt relative to said mounting frame, a plurality of spring members mounted around said screw rod section and disposed between said locating ring and said lock nut, and a washer mounted around said screw rod section and disposed between said spring members and said lock nut, said second packing ring having a curved flange at one side abutting said locating ring, said locating ring having a rectangular through hole engaged with said longitudinal planes of said screw rod section.

5,702,198

UMBRELLA ROD STRUCTURE OF MULTIPLE TUBES

Chin Song Kuo, No. 27-1, Lane 188, Chin Mar Road, Sec. 3, Chang Hua, Taiwan

Filed Apr. 18, 1996, Ser. No. 634,607

Int. Cl.⁶ A45B *19/00;* **F16B** *7/10*

U.S. Cl. 403—377 **1 Claim**

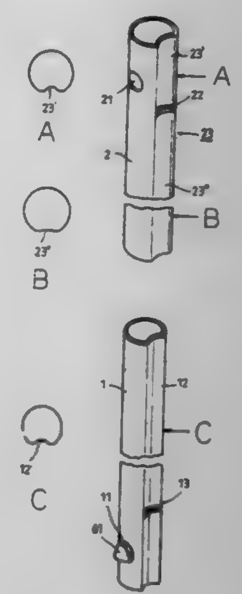

1. An umbrella rod structure formed by multiple tubes, comprising:

a longitudinally extended outer tube having a first hole formed through a wall thereof and a first arched groove formed longitudinally therein, said first arched groove being separated into respective upper and lower groove portions by a step, said upper groove portion being dimensioned larger than said lower groove portion;

a longitudinally extended inner tube slidingly disposed within said outer tube and having a second hole formed through a wall thereof and alignable with said first hole, said inner tube having a second arched groove formed longitudinally therein and disposed in corresponding relationship with said first arched groove, said second arched groove having dimensions substantially equal to said upper groove portion of said first arched groove, said second arched groove having a step formed therein; and,

a V-shaped stopper disposed in said inner tube, said stopper having a projection extending therefrom for passing through said aligned first and second holes to secure a position of said outer tube relative to said inner tube.

5,702,199

PLASTIC ASPHALT PAVING MATERIAL AND METHOD OF MAKING SAME

Gary M. Fishback, Coyote, N. Mex.; Dennis M. Egan, and Hilary Stelmar, both of El Cajon, Calif., assignors to Plasphalt Project Ltd. Co., Coyote, N. Mex.

Filed Nov. 9, 1995, Ser. No. 555,527

Int. Cl.⁶ C08L *95/00;* **E01C** *11/00*

U.S. Cl. 404—17 **30 Claims**

9. A roadway comprising:

a base layer comprised substantially of gravel; and

an asphaltic layer overlying the base layer and formed of an asphalt binder and aggregate;

the aggregate including at least five percent by volume of particles of plastic aggregate, the particles of plastic aggregate having treated activated surfaces at which the particles of plastic aggregate bond to the asphalt binder, the particles of plastic aggregate having a substantial portion thereof which is

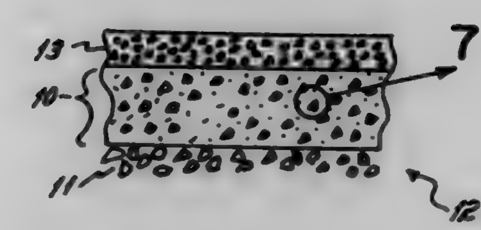

of a plastic material of a composition corresponding to one or more of PCCS classes 3 through 7; and

the particles of plastic aggregate being made according to the process comprising the steps of:

mechanically reducing the size of at least portions of plastic material to granules thereof of a given size; and

treating the surfaces of the granules with an activating vapor at a temperature sufficiently low and for a time sufficiently short to avoid substantial melting, burning or other perceptible change to the surface of a major portion of the granules, the treating step utilizing a vapor sufficiently active to activate the surfaces of the granules so as to enhance the bonding thereof to the asphaltic binder.

5,702,200

MANHOLE COVER FRAMES

David John Drake Hawkins, Claremont, South Africa, assignor to CSR Limited, Sydney, Australia

Division of Ser. No. 307,310, Sep. 16, 1994, Pat. No. 5,549,411. This application May 8, 1996, Ser. No. 646,474

Claims priority, application South Africa, Sep. 24, 1993, 93/7067; Australia, Aug. 23, 1994, PM7622

Int. Cl.⁶ E02D *29/14*

U.S. Cl. 404—25 **4 Claims**

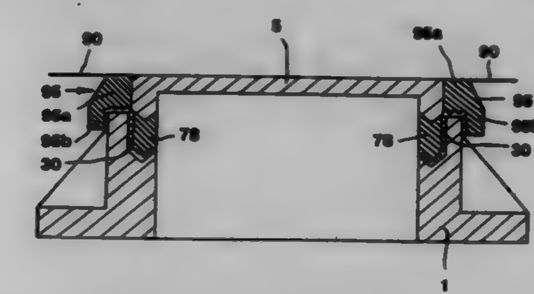

1. A spacer arrangement for a manhole cover frame, said manhole cover frame having substantially straight line edges, said manhole cover frame having corners at an intersection of each adjacent pair of said edges, said manhole cover frame being provided with manhole cover support steps at or adjacent said corners, said manhole cover frame having an upper side rim and an outer surface, said manhole cover frame being adapted to support a manhole cover, said spacer arrangement comprising:

at least one spacer element adapted to rest on each of said manhole cover support steps and adapted to support said manhole cover, and a cap with substantially straight line edges having a main body portion adapted to be seated on said upper side rim of said manhole cover frame and including an outwardly and downwardly extending lip portion which engages with and about said outer surface of said manhole cover frame, said main body portion having a top surface when seated on said upper side rim of said manhole cover frame,

said manhole cover fitting within said cap, said manhole cover having a top surface when placed within said cap, when resting on said at least one spacer element, when said main body portion of said cap is seated on said upper side rim of said manhole cover frame, and when said at least one spacer element rests on each of said manhole cover support steps, said top surface of said manhole cover being substantially level with said top surface of said main body portion.

5,702,201

METHOD FOR COMPENSATING DIFFERENTIAL COMPACTION IN AN ASPHALT PAVING MAT

Charles G. Macku, Cedar Rapids, Iowa, and Alan W. Boyles, Grand Junction, Colo., assignors to Cedarapids, Inc., Cedar Rapids, Iowa

Continuation of Ser. No. 529,147, Sep. 15, 1995, Pat. No. 5,599,134. This application Jul. 11, 1996, Ser. No. 679,695

Int. Cl.⁶ E01C *19/48*

U.S. Cl. 404—75 **17 Claims**

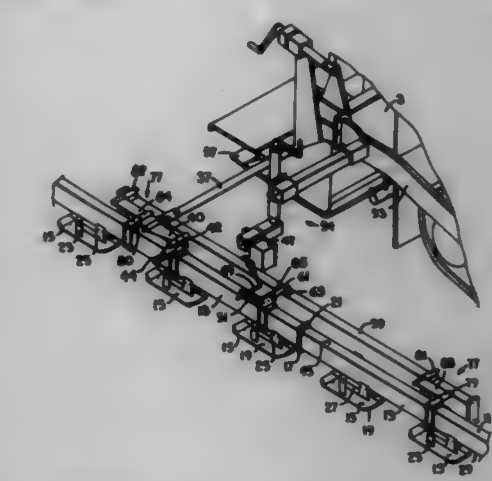

2. A method for placing a mat of asphalt material on a subgrade having localized longitudinal deviations with an asphalt paver and a screed having an adjustable pull point, said method comprising the steps of:

(a) establishing a nominal surface profile of the mat of asphalt material to be placed by the paver after compaction of the mat;

(b) detecting the localized longitudinal deviations of the subgrade; and

(c) adjusting the pull point of the screed in response to the detecting of the localized longitudinal deviations of the subgrade in order to modify the thickness of the mat of asphalt material placed by the paver such that the mat will have the nominal surface profile after compaction of the mat.

5,702,202

LAYING BEAM FOR A ROAD FINISHER

Burkhard Schleiter, Lütjensee, Germany, assignor to Svedala Strassenfertiger GmbH, Wardenburg, Germany

Filed Jan. 17, 1996, Ser. No. 587,518

Claims priority, application Germany, Jan. 17, 1995, 195 01 254.2

Int. Cl.⁶ E01C *19/22*

U.S. Cl. 404—118 **21 Claims**

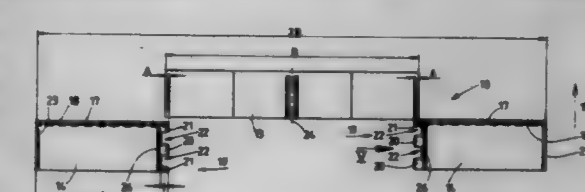

1. A laying beam (10) for a road finisher (11), said beam (10) having a main beam (13), arranged on the road finisher (11), and

two shifting beams (14) which can be shifted with respect to the main beam (13) transversely to a longitudinal working direction (12) of the road finisher (11), characterized in that the two shifting beams (14) have confronting end faces (19) which have respective projections (20, 21), and in that each projection (20, 21) of one of said two shifting beams (14) is offset with respect to a corresponding projection (20, 21) of the other shifting beam (14).

5,702,203
FLOATING "V" SHAPED BREAKWATER
Donald T. Resio; Michael J. Briggs; Jimmy E. Fowler, and Dennis G. Markle, all of Vicksburg, Miss., assignors to U.S. Army Corps of Engineers as represented by the Secretary of the Army, Washington, D.C.
Filed May 18, 1995, Ser. No. 444,348
Int. Cl.[6] E02B *3/00*
U.S. Cl. 405—26 **16 Claims**

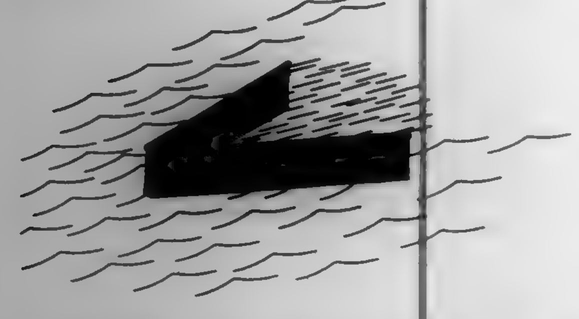

1. A floating V-type breakwater structure comprising essentially of at least one floating curtain breakwater (FC) unit with two straight-line stationary leg elements of a "V" formed unit with a means for mooring to the sea bottom,

the two legs are composed of two structural members where:

a first member provides a means for i) floating the structure and ii) sufficient freeboard for the structure to minimize wave overtopping;

a second member provides a means for ballasting the structure; and

a curtain member connecting the first and second members that extends through a water column between the first and second members, the curtain deflects incident wave front energy;

whereby the structure spreads and deflects incident wave front energy using principles of refraction and diffraction thereby providing a sheltered area in a lee side of the structure.

5,702,204
APPARATUS FOR CONNECTING AND ALIGNING FRAME MEMBER SECTIONS OF A TRENCH
Charles E. Gunter, Mooresville, N.C., assignor to ABT, Inc., Troutman, N.C.
Filed Mar. 22, 1996, Ser. No. 620,871
Int. Cl.[6] E02B *5/00*
U.S. Cl. 405—119 **46 Claims**

1. A trench forming system for forming a trench of predetermined shape comprising:

a pair of opposed frame members defining a support surface for supporting a trench cover, said frame members comprising a plurality of elongate frame member sections arranged in an end-to-end relationship and having at least one outwardly extending protrusion adjacent to at least one of the ends thereof;

an elongate form body substantially defining said predetermined shape of said trench and comprising opposed side surfaces, each of said pair of frame members being engaged with a different one of said opposed side surfaces; and

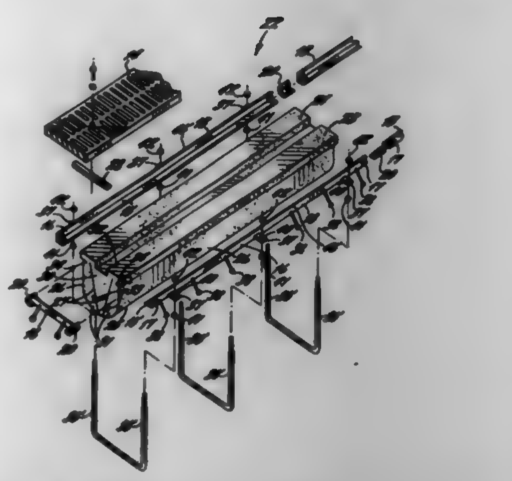

a connector for connecting the adjacent ends of said frame member sections, said connector comprising at least one panel section having opposed end portions and defining an opening within each respective end portion for engaging the respective protrusion of an adjacent frame member section such that said frame member sections are securely interconnected in an end-to-end relationship,

wherein each end portion of said connector comprises a peripheral edge portion for at least partially defining the respective opening, said peripheral edge portion defining a gap which divides said peripheral edge portion and which opens into the respective opening, said peripheral edge portion defining a guide surface adjacent to the gap and extending outwardly in a direction away from said frame member section for guiding the protrusion through said gap and into said opening,

wherein said connector is sufficiently resilient to deflect outwardly from an initial position as the protrusion of the respective frame member section is moved along the guide surface and through the gap, and wherein said connector is sufficiently resilient to substantially return to the initial position once the respective protrusion is received within the opening such that said connector receives and securely holds the protrusion within the opening of said connector without any substantial permanent deformation of said connector.

5,702,205
STEEL CATENARY RISER SYSTEM FOR MARINE PLATFORM
William C. Mahone, Plano; Bruce D. Chandler, Houston; Joseph P. Killeen, Carrollton, and David L. Garrett, Dallas, all of Tex., assignors to Mobil Oil Corporation, Fairfax, Va.
Filed Dec. 4, 1995, Ser. No. 566,807
Int. Cl.[6] F16L *19/00;23/00;23/02;23/12*
U.S. Cl. 405—169 **8 Claims**

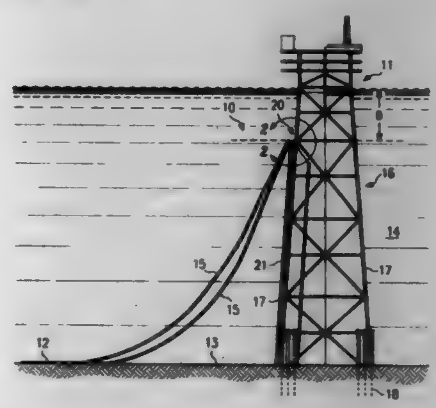

1. A marine riser system comprising:

a platform jacket positioned onto the marine bottom of a body of water;

a tie-in structure mounted on said jacket and lying at a depth below the turbulence zone of said body of water but at a depth which is substantially above said marine bottom, wherein said tie-in structure comprises:

a frame attached to said jacket at said depth;

a receptacle on said frame, said receptacle comprising:

a plate having a slot therein;

at least one flowline on said marine bottom having one end curving upward through a catenary from the marine bottom to said tie-in structure; and wherein said one end of said at least one flowline includes:

a tapered joint forming the terminus of said one end of said at least one flowline;

a connecting flange on the end of said tapered joint; and

an anchor flange on said tapered joint positioned below said connecting flange; and

means for structurally connecting said one end of said at least one flowline within said slot in said plate of said tie-in structure.

5,702,206
OFFSHORE SUPPORT STRUCTURE METHOD AND APPARATUS
Gary O. Quenan, Houston, and Tommy Lee Hull, Sugar Land, both of Tex., assignors to OPE, Inc., Houston, Tex.
Filed Mar. 14, 1996, Ser. No. 615,873
Int. Cl.[6] E01B *17/00;* **E02D** *31/00*
U.S. Cl. 405—227 **20 Claims**

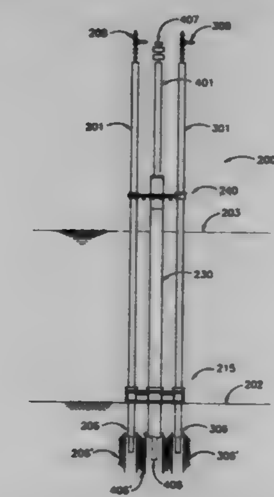

1. A method for providing and supporting at least two wells in the ground beneath a body of water, comprising the steps of:

(a) installing a first conductor, having an upper and a lower end, in the ground, with the first conductor extending from below the ground to above the body of water;

(b) drilling a first well through the first conductor to provide the first well;

(c) installing a subsea template on the ground adjacent the lower end of the first conductor;

(d) installing a caisson, having an upper and a lower end, in the ground, the caisson extending from the ground, through the subsea template, to above the body of water;

(e) attaching a guide frame to the caisson and the first conductor, proximate the upper ends of the caisson and the first conductor, the guide frame including at least one conductor guide;

(f) installing a second conductor, having an upper end and a lower end, in the ground, by passing the second conductor through the at least one conductor guide and the subsea template, with the second conductor extending from the ground to above the body of water;

(g) drilling a second well through the second conductor to provide the second well; and

(h) maintaining the at least two wells in the body of water for a period of time, with the at least two wells being supported without any piles or brace members, and being supported solely by the first and second conductors, the caisson, and the guide frame.

5,702,207
PROCESS FOR REINFORCING SLOPES
Jürgen Hoffmann, Menzelstr. 22, D-12157 Berlin, Germany
Filed Jul. 7, 1995, Ser. No. 499,733
Claims priority, application Germany, Jul. 9, 1994, 44 24 212.3
Int. Cl.[6] E02D *17/20*
U.S. Cl. 405—258 **4 Claims**

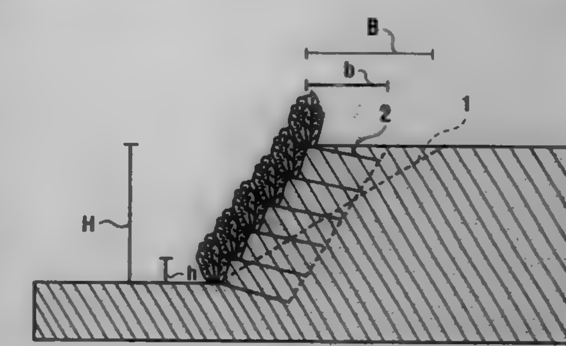

1. A process for reinforcing slopes with at least one of live plants and plant parts forming adventitious roots, the process comprising the steps of:

making soil mechanics calculations based on a known slope height, the specific gravity of the material of the slope, an apparent cohesion of the slope, a natural incline of the slope and the internal stability of the slope to determine a potential slope strength; and

reinforcing the slope to achieve said potential slope strength by determining a minimum diameter of said at least one of live plants and plant parts based on said step of making soil mechanics calculations,

determining a minimum depth of introduction of said at least one of live plants and plant parts based on said step of making soil mechanics calculations, and

determining a modular dimension of said at least one of live plants and plant parts based on said step of making soil mechanics calculations defining a plurality of planting retreats and introducing said at least one of live plants and plant parts into said slope, at said planting retreats, of a diameter at least bigger than said minimum diameter, at a depth at least greater than said minimum depth and with substantially said modular dimension.

5,702,208
GRID-LOCKED BLOCK PANEL SYSTEM
William K. Hilfiker, 3718 Lakeridge Dr., Grapevine, Tex. 76051, and Thomas P. Taylor, 2500 Cranberry La., Euless, Tex. 76039
Continuation-in-part of Ser. No. 252,738, Jun. 2, 1994, Pat. No. 5,484,235. This application Jan. 16, 1996, Ser. No. 585,568
Int. Cl.[6] E02B *3/12*
U.S. Cl. 405—258 **55 Claims**

1. A block for use in combination with a gridwork of intersecting elements which are engageable with the block to secure like blocks together in the construction of panels, said block comprising:

a) a body having at least one open cell extending therethrough from top to bottom; and

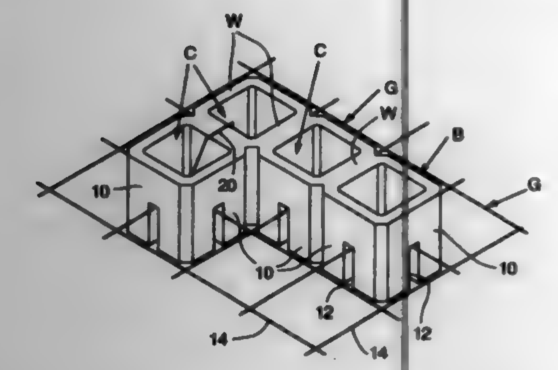

b) grooves formed in the bottom of said body and extending upwardly into the block, said grooves intersecting the open cell of the block and being proportioned for receipt of the intersecting elements whereby the elements may extend across and intersect within the open cell of the block.

5,702,209
POWDER FEED DEVICE, ESPECIALLY FOR POWDER COATING MATERIAL

Felix Mauchle, Abtwil, Switzerland, assignor to Gema Volstatic AG, St. Gallen, Switzerland

Filed Jul. 26, 1994, Ser. No. 280,870

Claims priority, application Germany, Jul. 26, 1993, P4325044.0

Int. Cl.^{6} B65G *53/14*

U.S. Cl. 406—12 **20 Claims**

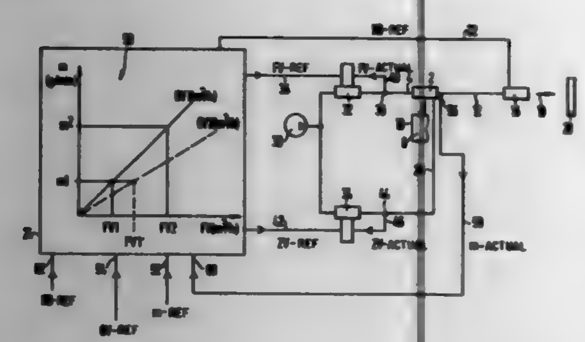

1. A powder feed system for powder coating material, comprising:
a feed air line for conducting a feed air stream;
a container for containing powder coating material;
an injector operatively connected to said container and said feed air line such that as said feed air stream is conducted through said injector, said powder coating material disposed within said container is withdrawn from said container and entrained within said feed air stream;
an additional air line for conducting an additional air stream into said feed air stream;
a feed air regulator for regulating said feed air stream;
an additional air regulator for regulating said additional air stream;
a computer having a memory; and
calibration diagram means stored within said computer memory for correlating a plurality of feed air rates, a plurality of powder feed rates, and a plurality of total air rates comprising feed air rates and additional air rates, wherein a feed air rate, required in connection with a predetermined total air rate, can be derived from said calibration diagram means as a function of a predetermined powder feed rate.

5,702,210
CUTTING TOOL WITH REPLACEABLE CUTTING INSERT

Gideon Bolanjlu, Kfar Havradim, Israel, assignor to Iscar Ltd., Tefen, Israel

Continuation of Ser. No. 341,616, Nov. 17, 1994, abandoned. This application Oct. 16, 1996, Ser. No. 734,368

Claims priority, application Israel, Dec. 30, 1992, 104273

Int. Cl.^{6} B23B *27/16*

U.S. Cl. 407—100 **13 Claims**

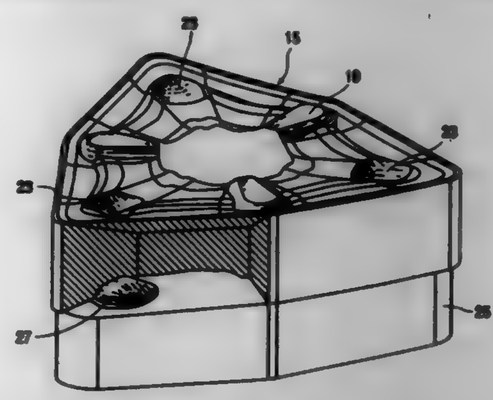

9. A cutting tool assembly comprising:
(a) an indexable double-sided cutting insert having a substantially prismatic shape, said insert comprising an upper and a lower insert surface having respective upper and lower rake surfaces and respective upper and lower beating surfaces; side relief surfaces between said upper and lower insert surfaces; upper and lower cutting edges defined respectively between said side relief surfaces and respective said upper and lower rake surfaces; insert corners defined between pairs of adjacent side relief surfaces and said upper and lower cutting edges adjacent to said pairs, said insert corners being indexable into an operative position presenting thereby an adjacent pair of operative upper cutting edges and an adjacent pair of inoperative lower cutting edges; chip forming grooves respectively formed in said upper and lower rake surfaces adjacent said cutting edges; and insert support recesses formed respectively on said upper and lower rake surfaces and being relatively disposed adjacent to said insert corners, each insert support recess being located inwardly of an adjacent deflection wall of said chip forming groove so as to ensure that generated chips are deflected from the insert support recess;
(b) a tool holder formed with a cutting insert retaining pocket having an insert supporting surface, and an insert supporting projection formed on said insert supporting surface, said insert supporting projection adapted to fit contactingly into any one of said insert support recesses, and
(c) clamping means for retaining said cutting insert in said cutting insert retaining pocket with said cutting insert being firmly clamped at a first side portion thereof remote from said pair of operative cutting edges against said pocket side wall, said insert supporting surface in clamping contact with the adjacent insert bearing surface, and with said insert supporting projection locally supporting the cutting insert at its operative insert corner, and said adjacent pair of inoperative lower cutting edges being spaced from said insert supporting surface.

5,702,211
CUTTING TOOL COOLANT DEVICE

David J. Roemer, 7481 Zurich Rd., Lyons, N.Y. 14489, and Scott Johnson, 1819 Eddy Rd., Walworth, N.Y. 14568

Filed Jun. 3, 1996, Ser. No. 657,325

Int. Cl.^{6} B23B *51/06*

U.S. Cl. 408—56 **2 Claims**

1. A tool holder including a body with an axial through passage having a central internal threaded section, and a coolant coupling

device, said coolant coupling device including: a threaded body section to engage said internal threaded section of said tool holder, and a nose section of smaller diameter than said body section; said body and nose sections together defining a coolant passage therethrough, said passage including a counterbore at the end thereof in said nose section and a chamfer at the end thereof in said body section; a sealing ring disposed in said counterbore; and a slot at the base of said chamfer for engagement with a tool to turn said coolant coupling device for axial movement thereof within said tool holder.

5,702,212
DRILLING DEVICE FOR PRODUCING DRILLED HOLES WITH AN UNDERCUT

Herbert Erath, Kesselweg 11, D-72178 Waldachtal, and Armin Blaese, Krokusstr. 12, D-72160 Horb-Altheim, both of Germany

Filed Apr. 16, 1996, Ser. No. 632,963

Claims priority, application Germany, Apr. 19, 1995, 195 14 379.5

Int. Cl.^{6} B23B *41/00*

U.S. Cl. 408—153 **7 Claims**

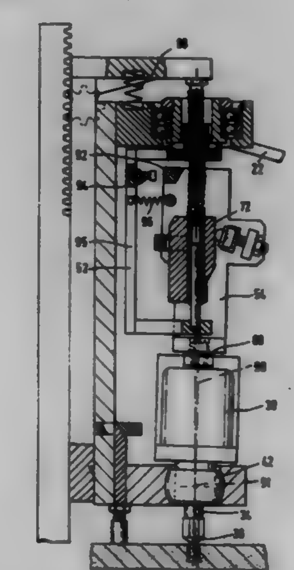

1. A drilling device for producing drilled holes with an undercut, comprising feed means for providing a feed movement of the device; drive means for driving a drilling tool; an outward displacement means for outwardly displacing the drilling tool, said outward displacement means for laterally outwardly displacing the drilling tool and including a swivel unit and a lead screw gear unit having a coarse thread pitch and including a lead screw and a lead screw nut which form two screw elements, said swivel unit having a flexing-resistant connection to a chuck for the drilling tool and being mounted so as to swivel about a pivot point, one of said screw elements of said lead screw gear unit being displaceable in direction of a longitudinal center line and upon a forward feed displacement said swivel unit being swiveled from its central position by said outward displacement means, so that said one of said screw elements is caused to rotate by the displacement of the other of said screw elements and is joined to said swivel unit so that they rotate together, and the displacement after the full outward displacement has been reached amounts to at least one thread pitch.

5,702,213
RETRACTABLE REGISTRATION PIN APPARATUS

Richard Polacek, Santa Barbara, and Dan Popovich, Adelanto, both of Calif., assignors to Excellon Automation Company, Torrance, Calif.

Filed May 24, 1996, Ser. No. 653,208

Int. Cl.^{6} B23Q *3/02;3/18*

U.S. Cl. 409—218 **12 Claims**

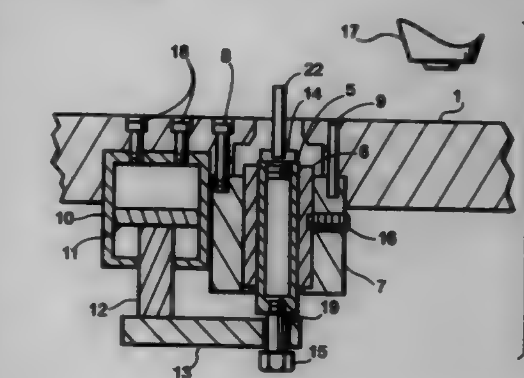

1. A registration apparatus for use with a machine tool having at least one spindle comprising:
a. a tooling plate having an access hole,
b. a guide mounted in a fixed position relative to said tooling plate,
c. a shaft slideably received by said guide adapted for longitudinal movement within said guide,
d. a collar adapted for removable attachment to one end of said shaft, having a hole in the top thereof,
e. a registration pin received by said hole in said collar adapted for extending above the surface of said tooling plate on movement of said shaft, and
f. a linear motion device having a rod, mounted on said tooling plate operatively coupled to said shaft.

5,702,214
NON-REMOVABLE STRUCTURAL FASTENER ASSEMBLY

John A. Duran, Glendora, Calif., assignor to Avibank Mfg., Inc., Burbank, Calif.

Filed Nov. 7, 1996, Ser. No. 746,235

Int. Cl.^{6} F16B *31/00;13/04*

U.S. Cl. 411—5 **46 Claims**

1. A fastener assembly for permanently securing together a pair of mating panels having aligned apertures therethrough comprising:
a bolt having an enlarged head at one end, a threaded shaft portion at the other end and an integral main body portion interconnecting the head and the shaft portion;
a split ring bushing encircling said integral main body portion of said bolt;

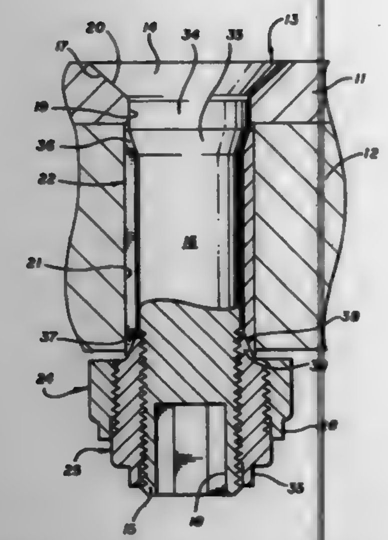

a first nut having a main body portion with a threaded throughbore threadably mounted on said threaded shaft portion of said bolt, said first nut having thread deforming means associated with said nut disposed adjacent the threads of said threaded shaft portion when said first nut is threadably mounted on said threaded shaft portion, said first nut also being threaded on the exterior of the main body portion thereof;

a second nut having a main body portion with a threaded throughbore threadably mounted on said threaded exterior of said first nut, said second nut having thread deforming means associated with said second nut disposed adjacent the threads of said threaded exterior of said first nut when said second nut is threadably mounted on the threaded exterior of said first nut; and

cooperating means on said first nut and said bushing for expanding said bushing radially outwardly away from said shaft portion thereby filling the aperture in said panel on which said bushing is disposed when said first nut is threaded on said shaft portion.

5,702,215
RETRACTABLE FIXATION DEVICE
Lehmann K. Li, Milford, Conn., assignor to Li Medical Technologies, Inc., Shelton, Conn.
Filed Jun. 5, 1995, Ser. No. 461,713
Int. Cl.⁶ F16B *13/04*
U.S. Cl. 411—21 **21 Claims**

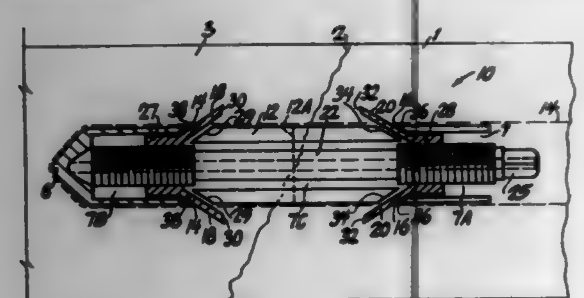

1. A fastener for securing two members together through an aligned bore in the two members, the fastener comprising:

a longitudinally extending body having at least one opening adjacent each of respective ends thereof, the body having a central bore hole, a threaded shaft concentrically disposed in said central bore hole and having opposite threads at each end, with a rotation applying member at an accessible end;

a nut provided on each of said opposite threads in threaded engagement with the respective thread, at least one longitudinally extending deformable engaging finger coupled to each of said nuts and disposed adjacent a respective one of said openings; and

the at least one finger being adapted to extend through the respective opening when said shaft is turned in a first direction to cause the nuts to move toward each other, thereby causing the fingers to engage, when the openings at each end are disposed in the aligned bore adjacent different ones of said two members to be secured together, with respective ones of said two members, thereby securing the two members together, said fingers each being deformable when extending radially through a respective one of the openings and adapted to penetrate into a respective one of said two members, each opening having a cam surface for engagement by the respective engaging fingers, the engaging fingers being directed along the cam surface at an angle away from the longitudinally extending body through the opening as the nuts move toward each other.

5,702,216
EXPANDING WALL PLUG
Ming-Hsin Wu, 14 Fl., No. 494, Sec. 2, Hsin-Chin Rd., Hsin Ying City, Tainan Hsien, Taiwan
Filed Aug. 27, 1996, Ser. No. 703,886
Int. Cl.⁶ F16B *13/04;13/06*
U.S. Cl. 411—32 **4 Claims**

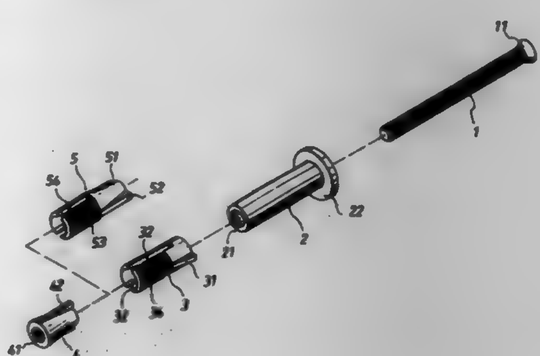

1. An expanding wall plug comprising:

an anchoring socket made from metal and adapted for mounting in a hole in a wall, the socket having an outward flange raised around one end thereof, and a longitudinal through hole, said longitudinal through hole having a tapered outer end gradually increasing toward the outside;

a screw inserted through said anchoring socket, the screw having a head received in the tapered outer end of the longitudinal through hole of said anchoring socket;

a locating expansion shell sleeved onto said screw and abutted against one end of said anchoring socket, said expansion shell comprising two wedge blocks symmetrically raised from the periphery at one end, a plurality of circumferential ribs at an opposite end, and two opposite longitudinal slots cut through the ribs and extending to one end, the wedge blocks and longitudinal slots of said expansion shell being equiangularly spaced around the periphery; and

a conical tightening up device mounted around said screw rod and forced forwards to squeeze said locating expansion shell against said anchoring socket axially upon rotary motion of said screw rod, said conical tightening up device having a screw bole threaded onto said screw rod, and two wedge blocks symmetrically raised from the periphery and respectively forced into the longitudinal slots of said locating expansion shell.

5,702,217
BRAKING NUTS OR SCREWS AND MOUNTINGS OBTAINED WITH SAME DEVICES
Jean-Louis Charbonnel, Boissise le Roi; Michel Franchet, Cesson, and Jacky Serge Naudet, Bondoufle, all of France, assignors to Societe Nationale d'Etude et de Construction de Moteurs d'Aviation "Snecma", Paris, France
Filed Jun. 15, 1995, Ser. No. 490,611
Claims priority, application France, Jun. 22, 1994, 94 07625
Int. Cl.⁶ F16B *39/12;39/36*
U.S. Cl. 411—909 **1 Claim**

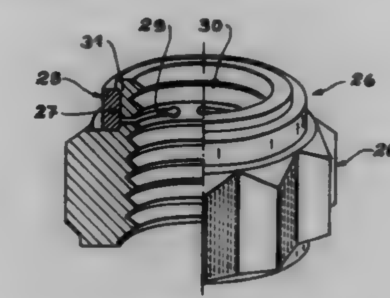

1. An assembly comprising:

a nut and a ring having a width parallel to the diameter of the ring and a height perpendicular to the diameter of the ring, the nut comprising a circular throat positioned near an axial end of the nut, the nut further comprising at least one arc which defines a circle-shaped notch in the throat, the ring being inserted in the throat and being made of a shape-memory material, wherein the ring undergoes only an increase of height so as to widen the notch on a temperature change from a mounting state to a working state.

5,702,218
FASTENER
Daniel Onofrio, 109 Scantic Rd., East Windsor, Conn. 06088
Filed Dec. 13, 1995, Ser. No. 571,764
Int. Cl.⁶ F16B *21/00*
U.S. Cl. 411—552 **27 Claims**

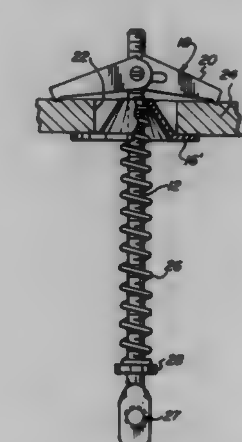

1. A fastener comprising:

a threaded bolt having first and second end portions;

a spring disposed over said bolt, said spring having first and second end portions;

means for suspending a framework for an acoustical ceiling including an aperture located at said first end portion of said bolt;

a stop collar located adjacent said first end portion of said bolt, above said means for suspending, for limiting the movement of said first end portion of said spring toward said first end portion of said bolt;

a firestop element disposed over said bolt, said firestop element being in contact with said second end portion of said spring;

a spring-loaded wing toggle biased to be normally open whereby wings of said wing toggle are non-parallel to said bolt threaded onto said second end portion of said bolt such that said firestop element lies between said toggle and said second end portion of said spring; said bolt being axially movable to clamp a panel between said wing toggle and said firestop element to permit tightening of said toggle fastener by rotation of said bolt relative to said wing toggle and to adjust a position of said aperture of said means for suspending a framework for an acoustical ceiling by rotating said bolt relative to said wing toggle, causing the interengaged threaded bolt and threaded wing toggle to raise or lower said position of said aperture.

5,702,219
APPARATUS FOR AND PROCESS OF BOOKBINDING
Katsuyoshi Hattori, Takatsuki, Japan, assignor to Kabushiki Kaisha Kanpuri, Takatsuki, Japan
Filed Feb. 26, 1996, Ser. No. 607,343
Int. Cl.⁶ B42B *5/08*
U.S. Cl. 412—6 **20 Claims**

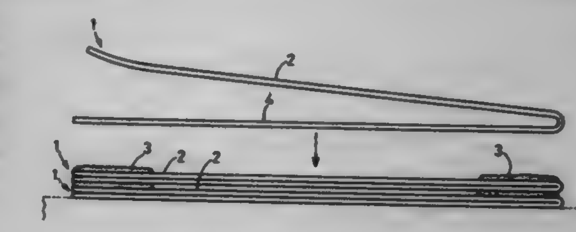

1. An bookbinding apparatus for back-bonding by folding in half a plurality of paper sheets, each paper sheet of said plurality of paper sheets having a first side, which bears characters thereon, and a second opposed side, which does not bear any characters thereon, said second opposed side of each paper sheet of said plurality of sheets being an outer side such that said second opposed sides of said plurality of paper sheets, after being folded, are bonded together, said apparatus comprising:

folding means for folding each paper sheet of said plurality of paper sheets in half with said second opposed sides of each paper sheet of said plurality of paper sheets being said outer side;

stacking means for stacking each paper sheet of said plurality of paper sheets, after each sheet of said plurality of paper sheets has been folded, while successively feeding each sheet of said plurality of paper sheets to a predetermined position on a plate-shaped member; and

adhesive applying means for applying adhesive material to said second opposed sides of each sheet of said plurality of paper sheets fed to said predetermined position, wherein each paper sheet of said plurality of paper sheets is successively bonded together on said second opposed side as each paper sheet of said plurality of paper sheets are fed to said plate-shaped member.

5,702,220
METHOD AND APPARATUS FOR ELIMINATION OF ADHESIVE STRINGERS DURING PERFECT BINDING
Jeff Combs, 179 Country Aire, Greenwood, Ind. 46143
Continuation of Ser. No. 429,629, Apr. 27, 1995, abandoned. This application Feb. 7, 1997, Ser. No. 796,953
Int. Cl.⁶ B42C *9/00*
U.S. Cl. 412—8 **20 Claims**

19. A method for perfect binding a book, comprising the steps of:

(a) melting a quantity of adhesive;

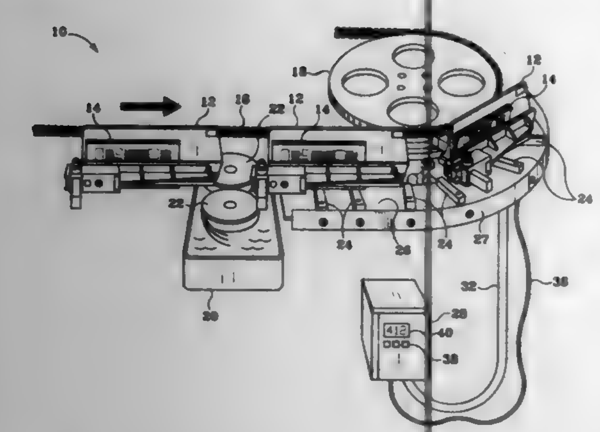

(b) moving the book through the adhesive such that adhesive adheres to an end of the book; and

(c) causing stringers that descend from the adhesive on the book to impact a solid heater having a heater surface maintained at a heater temperature which is greater than a melting point of the adhesive, thereby melting and separating the stringers from the book.

5,702,221

MATERIALS HANDLING SYSTEM

Sidney Sridhar, Richmond, Canada, assignor to Seabulk Systems Inc., Richmond, Canada

Continuation of Ser. No. 414,027, Mar. 31, 1995, abandoned. This application Dec. 4, 1996, Ser. No. 759,931

Int. Cl.^{6} B63B *27/22*

U.S. Cl. 414—142.3 **15 Claims**

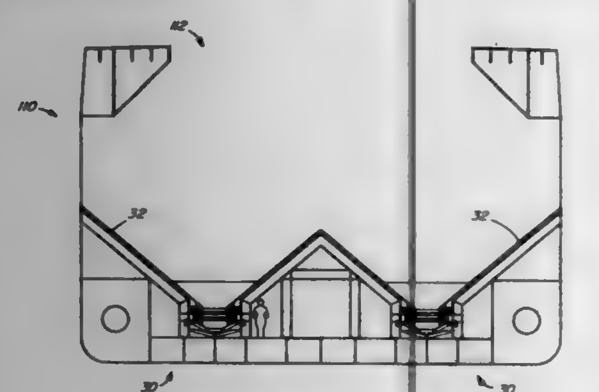

1. A materials handling system for controlling the gravity discharge of material through a discharge opening onto a conveyor, which discharge opening has a width dimension in a horizontal direction, the system comprising:
a gate extending across said discharge opening and having at least one outlet opening, of a smaller dimension than said discharge opening, therein for the through flow of material from the discharge opening through the gate;
a feeder deck below the gate having a surface for receiving material discharged from the discharge opening through the gate, said feeder deck surface being mounted for translational movement transversely of said gate for controlling the flow of material through said gate and for discharging the material onto said conveyor.

5,702,222

ELECTRICALLY DRIVEN CAR LIFT APPARATUS FOR HOME USE

Arnold M. Rosen, Roslyn, N.Y., assignor to Park Plus Corporation, Hauppauge, N.Y.

Filed Aug. 14, 1996, Ser. No. 696,391

Int. Cl.^{6} B66F *7/14*

U.S. Cl. 414—228 **10 Claims**

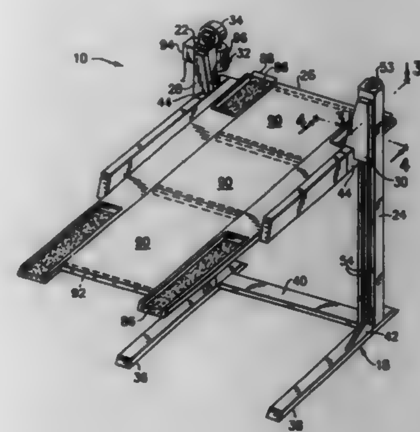

1. An electrically driven car lift apparatus for raising an automobile, said car lift apparatus comprising:
a base;
a pair of spaced apart upstanding stanchions rigidly connected to said base and aligned to be substantially parallel, each said stanchion being formed to define several elongated channels extending the length of said stanchions, each said channel being at least partially defined by an elongated planar base and at least one pair of elongated side walls, said side walls being disposed intermediate a plane defined by said planar base and the center of said respective stanchion;
a first threaded screw rotatably disposed within one said stanchion extending from said base substantially the length of said one said stanchion, said screw having two opposed ends with a first sprocket mounted to said end disposed within said base;
a second threaded screw rotatably disposed within the other said stanchion extending from said base substantially the length of said other said stanchion, said screw having two opposed ends with a second sprocket mounted to said end disposed within said base, wherein said sprockets are substantially coplanar;
a continuous chain disposed in said base and in meshing engagement about said first and said second sprockets;
a pair of lifting assemblies, each said lifting assembly corresponding to a single said stanchion, each said lifting assembly having a body, a portion of said body being disposed within said corresponding stanchion such that said portion of said body at least partially encircles said screw disposed in said corresponding stanchion, at least one lifting nut threadedly engaged to said screw disposed within said corresponding stanchion, said at least one lifting nut being non-rotatably disposed within said portion of said body, and a plurality of rollers rotatably mounted to said portion of said body, each said roller being at least partially disposed within a single said channel such that said roller is in rolling engagement with said side walls which partially define respective said channel;
a substantially planar platform formed to accommodate the automobile and supported by said lifting assemblies so as to be aligned substantially perpendicular with said stanchions; and
an electric driving means for rotating said first screw and said first sprocket, wherein rotation of said first sprocket engages said chain and causes rotation of said second sprocket and said second screw, and wherein rotation of said screws causes said lifting nuts to translate along the length of said screws, the lifting assemblies and the platform translating therewith.

5,702,223

VEHICLE RESTRAINT

Norbert Hahn, Franklin, and Brian Bender, Racine, both of Wis., assignors to Rite-Hite Corporation, Milwaukee, Wis.

Continuation of Ser. No. 173,411, Dec. 23, 1993, abandoned. This application May 24, 1996, Ser. No. 652,995

Int. Cl.^{6} B65G *67/02*

U.S. Cl. 414—401 **5 Claims**

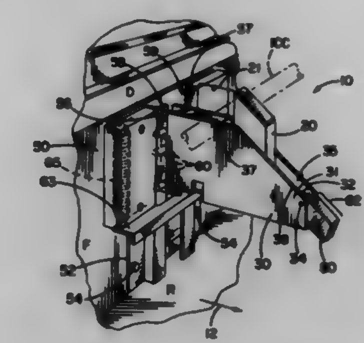

1. A vehicle restraint for securing a vehicle parked on a roadway adjacent a loading structure, comprising in combination:
a carriage mounted for substantially vertical movement relative to the loading structure, and including a horizontal top surface, the carriage being biased to yieldably assume an elevated position, and movable downwardly from the elevated position by an external force being exerted on the carriage;
a barrier mounted within the carriage for movement between an inoperative vehicle-release position wherein the barrier is disposed within the carriage, and an operative vehicle-restraining position wherein at least a portion of the barrier extends above the horizontal top surface of the carriage to thereby restrain the vehicle from moving away from the loading structure;
a sensor member mounted adjacent the horizontal top surface of the carriage, and mounted for reciprocating movement with respect thereto between a depressed position and an extended position wherein at least the upper surface of the sensor extends above the horizontal top surface of the carriage, the sensor member being disposed such that contact of the vehicle with the sensor member moves the sensor member to the depressed position;
a contact switch coupled to the sensor member for movement therewith; and
a switch-engaging member on the barrier, and disposed to contact the contact switch when the sensor member is in the depressed position and the barrier is extended to the operative vehicle-release position, such contact generating a signal.

5,702,224

GRAVITATIONAL IC PACKAGE TRANSFER MECHANISM

Toshihiro Kubota, Honjo, Japan, assignor to Hitachi Electronics Engineering Co., Ltd., Tokyo, Japan

Filed Aug. 19, 1996, Ser. No. 699,341

Claims priority, application Japan, Dec. 22, 1995, 7-349566

Int. Cl.^{6} B65B *69/00*

U.S. Cl. 414—403 **7 Claims**

1. An IC package transfer mechanism for transferring molded IC device packages to and from a flat tray with a large number of IC holder nests in an array on an upper side thereof and an IC magazine adapted to accommodate a large number of the IC packages in a row within a tubular housing to be turned into a tilted position in loading and unloading operations to let the IC packages slide into or out of the cylindrical housing automatically by gravity, said IC package transfer mechanism comprising:
an IC package transfer block movably supported for displacement between a horizontal position and a tilted position, and internally provided with a slide channel with stopper means

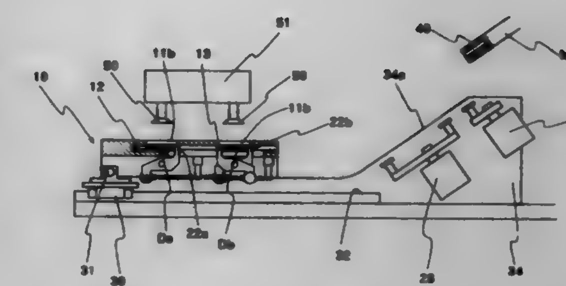

for holding one or a plural number of the IC packages in predetermined IC stop positions, said slide channel having an open entrance at an end to be turned into said tilted position and connected to an outlet end of a tubular IC magazine set in a similarly tilted position at a loading terminal for transferring the IC packages to said IC transfer block automatically by gravitational sliding movements of individual IC packages, along with top openings bored in a top wall over said IC stop positions to permit access to the IC packages in said slide channel from above by a handling means when said transfer block is in said horizontal position.

5,702,225

BOOMLESS AUTOMATED SIDE LOADER FOR REFUSE COLLECTION VEHICLE HAVING LIFT ARM WITH NON-EXTENDABLE UPPER END

Jose A. Ghibaudo, Alta Loma, Calif., assignor to Amrep, Inc., Ontario, Calif.

Filed Jun. 5, 1996, Ser. No. 658,325

Int. Cl.^{6} B66F *3/04*

U.S. Cl. 414—408 **20 Claims**

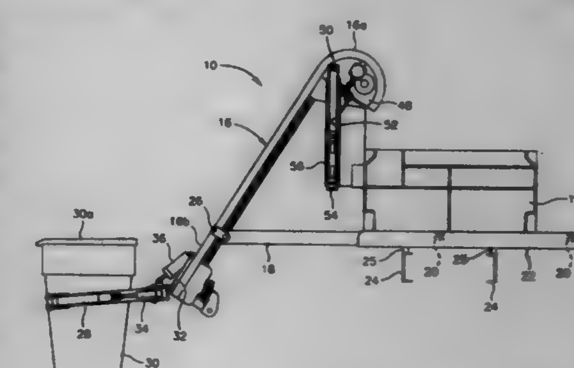

11. An apparatus for mounting on the side of a vehicle for collecting refuse from containers positioned along a roadside, comprising:
a lift arm having a curved upper portion;
at least one support rail;
a frame element configured to receive and guide the support rail for horizontal extension and retraction along a transverse direction;
a first pivotal connection between an outer end of the support rail and the lift arm located between an upper end of the lift arm and a lower end of the lift arm;
a power mechanism connected between the vehicle and the lift arm to extend and retract the lift arm;
a second pivotal connection between the curved upper portion of the lift arm and the vehicle body adjacent a hopper section thereof so that the upper end of the lift arm does not move away from the vehicle body when the support rail is extended and the lower end of the lift arm is moved adjacent a refuse container positioned along a roadside;
a container gripping mechanism;
a carriage supporting the container gripping mechanism and capable of translational movement between the lower end of

the lift arm and a dump position along the curved upper portion of the lift arm; and

a motor drive mechanism that moves the carriage between the lower end of the lift arm and the dump position along the curved upper portion of the lift arm.

5,702,226
TIRE DOLLY
David Pickle, 602 S. Jules, Cleveland, Okla. 74020
Filed Aug. 22, 1996, Ser. No. 701,323
Int. Cl.⁶ B62B *1/10*
U.S. Cl. 414—426 **1 Claim**

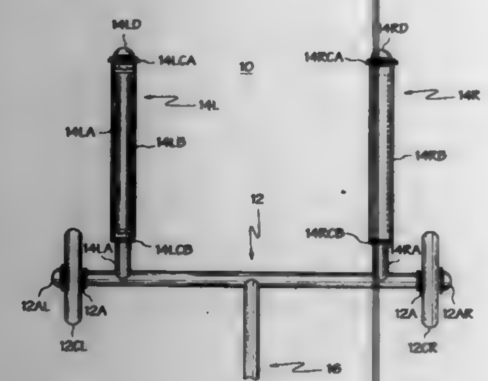

1. A tire dolly comprising:

A) a cross member assembly comprising:

i) a cross member axle having left and right outer ends, a left tire rotatably mounted over the left outer end of the cross member axle and secured in place by a left cross member axle cap, and a right tire rotatably mounted over the right outer end of the cross member axle and secured in place with a right cross member axle cap;

B) a left fork assembly comprising:

i) a left fork shaft having inner and outer ends, the inner end rigidly attached to the cross member axle adjacent to its left outer end and extending in a first direction;

ii) a left fork roller having inner and outer ends, and being rotatably mounted and longitudinally disposed over the left fork shaft;

iii) a left fork outer washer mounted on the left fork shaft adjacent the outer end of the left fork roller and a left fork inner washer mounted on the left fork shaft adjacent the inner end of the left fork roller, the left fork outer washer having a diameter greater than the diameter of the left fork roller to support the left fork roller a distance above a supporting surface; and

iv) a left fork cap secured to the outer end of the left fork shaft for retaining the left fork roller and the left fork outer washer thereto;

C) a right fork assembly comprising:

i) a right fork shaft having inner end and outer ends, the inner end rigidly attached to the cross member axle adjacent to its right outer end and extending in a direction parallel to the first direction;

ii) a right fork roller having inner and outer ends, and being rotatably mounted and longitudinally disposed over the right fork shaft;

iii) a right fork outer washer mounted on the right fork shaft adjacent the outer end of the right fork roller and a right fork inner washer mounted on the right fork shaft adjacent the inner end of the right fork roller, the right fork outer washer having a diameter greater than the diameter of the right fork roller to support the right fork roller a distance above the supporting surface; and

iv) a right fork cap secured to the outer end of the right fork shaft for retaining the right fork roller and the right fork outer washer thereto; and

D) a handle assembly comprising:

i) an inner handle member having inner and outer ends, the inner end rigidly attached to the cross member axle and extending in a direction opposite to the first direction;

ii) an outer handle member having inner and outer ends,

iii) a handle joiner attaching the outer end of the inner handle member to the inner end of the outer handle member for pivoting folding movements of the outer handle member with respect to the inner handle member.

5,702,227
EJECTOR BUCKET
Ronald Berg, R.R. 1, Box 190-A, Pelican Rapids, Minn. 56572
Filed May 13, 1996, Ser. No. 645,102
Int. Cl.⁶ E02F *3/70*
U.S. Cl. 414—704 **10 Claims**

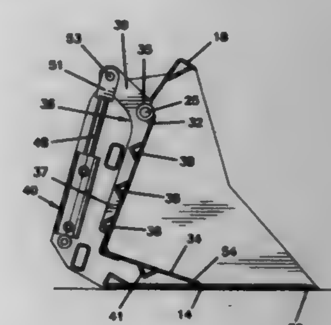

1. An ejector bucket for loading and ejecting material, comprising:

a bucket frame, the bucket frame including opposing side walls and a bottom wall extending between the side walls;

an ejector plate located within the bucket frame, the ejector plate being movable between a first position where the ejector plate and the bucket frame together form a bucket for holding material and a second position where the ejector plate has pushed substantially all of the material out of the bucket;

an ejector bracket attached to the ejector plate and pivotably connected to the frame, said ejector bracket comprising a collar which is pivotably mounted to the frame, a mounting arm attached to the ejector plate and having an end attached to the collar, and a lever arm having a first end and a second end, the second end of the lever arm being attached to the collar; and

an actuating cylinder connected to the bucket frame and to the first end of the lever arm, the actuating cylinder comprising a casing having a cylindrical side wall and opposing end walls, a piston movably disposed within the casing, and an actuating rod having a first end attached to the piston and a second end extending out of the casing through an opening in one of the end walls;

wherein said actuating cylinder is operable in a push mode wherein the actuating rod is pushed out of the casing, and is operable in a pull mode wherein the actuating rod is drawn into the casing; and

wherein operation of the actuating cylinder in the pull mode causes the ejector bracket to pivot so as to cause the ejector plate to move from the first position to the second position, and operation of the actuating cylinder in the push mode causes the ejector bracket to pivot so as to cause the ejector plate to move from the second position to the first position.

5,702,228
ROBOTIC ARM SUPPORTING AN OBJECT BY INTERACTIVE MECHANISM
Tadamoto Tamai, Fujisawa, and Toshitaka Yamamoto, Hoya, both of Japan, assignors to Sumitomo Heavy Industries, Ltd., Tokyo, Japan
Filed Jul. 17, 1996, Ser. No. 682,100
Claims priority, application Japan, Jul. 31, 1995, HEI 7-195228
Int. Cl.⁶ B25J *15/00*
U.S. Cl. 414—744.5 **8 Claims**

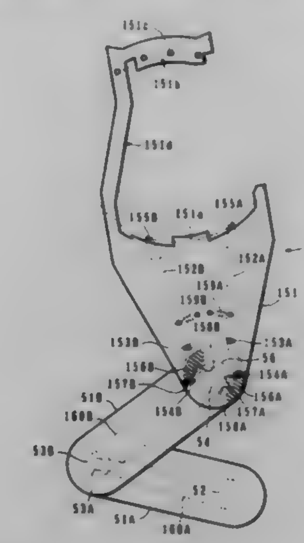

1. A robotic arm comprising:

a rotary shaft;

an articulated arm member fixed to said rotary shaft and having a folding expansion/contraction mechanism;

a support member rotatively supported by a distal end of said arm member, said folding mechanism being connected between said shaft and said support member for providing a constant relationship between said rotary shaft and said support member;

an auxiliary support member supported by a support shaft fixed to said support member for supporting a workpiece in cooperation with said support member, said auxiliary support member being swingable an association with a folding expansion/contraction motion of said arm member and

a cam mechanism provided at portions where said auxiliary support member and said arm member are coupled with each other for swinging said auxiliary support member in association with said folding expansion/contraction motion of said arm member.

5,702,229
REGENERATIVE FUEL PUMP
Glenn A. Moss, Cass City, and Edward J. Talaski, Caro, both of Mich., assignors to Walbro Corporation, Cass City, Mich.
Filed Oct. 8, 1996, Ser. No. 728,270
Int. Cl.⁶ F04D *5/00*
U.S. Cl. 415—55.4 **23 Claims**

1. An electric-motor fluid pump that comprises:

a housing including a liquid inlet and a fluid outlet,

an electric-motor including a rotor and means for applying electrical energy to said motor to rotate said rotor within said housing; and

pump means including an impeller coupled to said motor for co-rotation therewith and having a periphery with a circumferential array of blades arranged in radially outer and inner circular rows concentric with the rotational axis of said impeller,

and means forming an arcuate pumping channel surrounding at least a portion of said impeller periphery and communicating

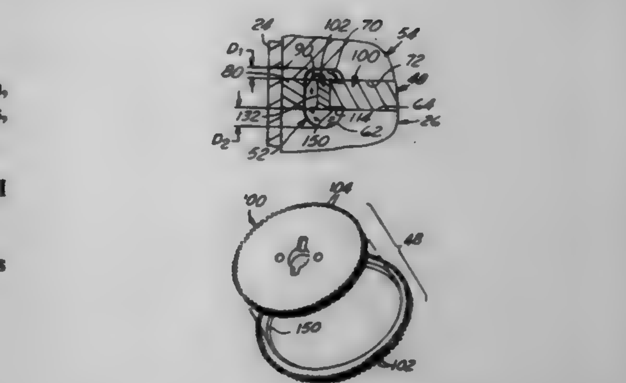

at circumferentially opposite first and second ends respectively with said housing inlet and outlet,

said pumping channel means including first and second channel section arcuate grooves in said channel means oriented in mutually facing, axially opposed relationship to one another and in side-flanking relationship to said portion of said impeller periphery, said channel grooves extending radially of said impeller co-extensively with said blade rows and communicating axially therewith to define therewith a toroidal fluid flow path extending circumferentially of said impeller between said ends of said pumping channel.

5,702,230
ACTIVELY CONTROLLED ACOUSTIC TREATMENT PANEL
Robert E. Kraft, Cincinnati, and Asif A. Syed, Loveland, both of Ohio, assignors to General Electric Company, Cincinnati, Ohio
Filed Jan. 29, 1996, Ser. No. 603,850
Int. Cl.⁶ F01D *25/04*
U.S. Cl. 415—119 **12 Claims**

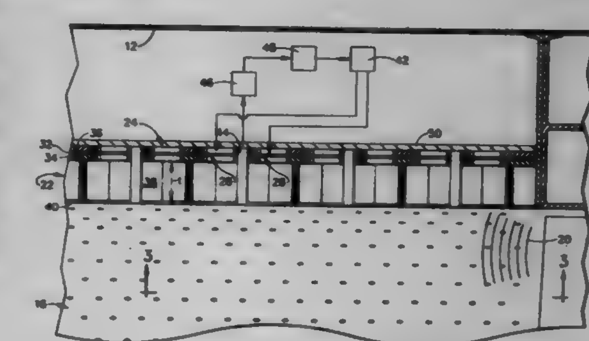

1. An actively controlled acoustic treatment panel for suppressing noise in a gas turbine engine nacelle, comprising:

(a) a piezoelectric membrane;

(b) a plurality of interconnected honeycomb members having a first end positioned adjacent a radially inner surface of said piezoelectric membrane and a second end spaced from said first end to form a cavity between said piezoelectric membrane and said second honeycomb member end, wherein a circumferential matrix of adjacent individually controllable elements is formed within the boundary of each honeycomb member;

(c) a facesheet bonded to said second end of said interconnected honeycomb members;

(d) a plurality of sensors positioned within said acoustic treatment panel for sensing acoustic pressure of said noise propagated against said facesheet;

(e) means for electrically driving each of said individually controllable elements to effect displacement in a direction substantially perpendicular to said facesheet; and

(f) means operatively connected to said pressure sensors and said driving means for controlling velocity magnitude and phase of said individually controllable elements during displacement, wherein a resulting acoustic impedance at said facesheet achieves a desired acoustic impedance boundary condition at said nacelle.

5,702,231

APPARATUS AND METHOD FOR REDUCING NOISE EMISSIONS FROM A GAS TURBINE ENGINE INLET

Robert P. Dougherty, Bellevue, Wash., assignor to The Boeing Company, Seattle, Wash.

Filed Aug. 9, 1996, Ser. No. 694,967

Int. Cl.[6] F01D 25/00; F01N 7/00

U.S. Cl. 415—119 7 Claims

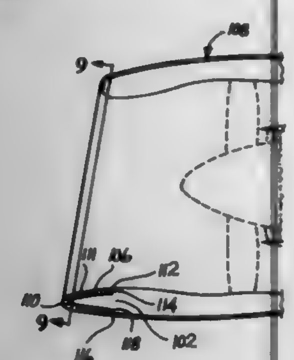

5. A method for reducing noise emissions from an inlet of a turbofan engine, the method comprising the steps of:

a. installing noise attenuating material at a lower portion of the inlet having a lower leading edge;

b. installing the noise attenuating material in a manner that it extends from the lower leading edge in a direction rearward along an inner surface of the lower inlet portion to a throat portion of the inlet; and

c. installing the noise attentuating material in a manner that it extends from the lower leading edge in a direction rearward along an outer surface of the lower inlet portion to a location which is below the throat portion of the inlet.

5,702,232

COOLED AIRFOILS FOR A GAS TURBINE ENGINE

Robert P. Moore, Tequesta, Fla., assignor to United Technologies Corporation, Hartford, Conn.

Filed Dec. 13, 1994, Ser. No. 354,299

Int. Cl.[6] F01D 5/18

U.S. Cl. 416—95 4 Claims

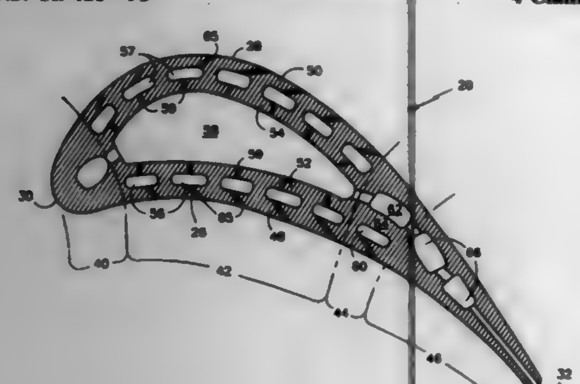

1. An airfoil for a gas turbine engine having a suction side wall on a suction side and a pressure side wall on a pressure side, said pressure side wall and said suction side wall extending from a leading edge to a trailing edge in a chordwise direction, said airfoil having a leading edge region, a mid-chord region, and a trailing edge region, said regions sequentially situated in said chordwise direction from said leading edge to said trailing edge, said mid-chord region having at least one suction side feed passage and at least one pressure side feed passage, said suction side feed passage being disposed on said suction side and bound by said suction side wall and a first inner wall, said pressure side feed passage being disposed between said pressure side wall and a second inner wall, a feed chamber being defined between said first inner wall and said second inner wall, said trailing edge region having at least one trailing edge passage disposed between said pressure side wall and said suction side wall, said airfoil characterized by:

a transition region disposed between said mid-chord region and said trailing edge region, said transition region having a transition feed passage and a transition chamber, said transition feed passage and said transition chamber being separated by said first inner wall extending from said mid-chord region into said transition region in said chordwise direction and bound by said suction side wall and said pressure side wall.

5,702,233

BLADE OPENING FILLER

David A. Ouellette, Farmington, Conn., assignor to United Technologies Corporation, Windsor Locks, Conn.

Filed Apr. 26, 1996, Ser. No. 638,475

Int. Cl.[6] F04D 29/18

U.S. Cl. 416—245 R 20 Claims

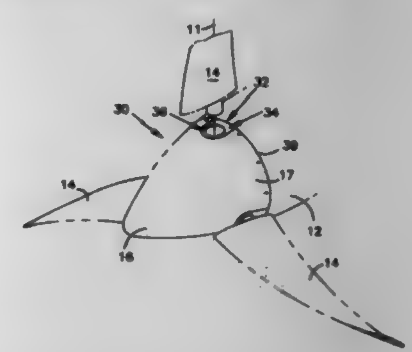

1. In a propeller system having a contoured spinner with a blade opening therethrough, and a propeller blade which is rotatable about a longitudinal axis of the propeller blade, having a blade shank which extends through the blade opening, said spinner releasably attached to a bulkhead, a blade opening filler comprising:

(a) a spinner insert for generally filling a first portion of the blade opening between the spinner and the blade shank of the propeller blade; and

(b) a bulkhead insert for generally filling a second portion of the blade opening between the bulkhead and the blade shank of the propeller blade, wherein said bulkhead insert is directly releasably attached to the bulkhead to secure said bulkhead insert in said second portion of the blade opening, wherein said bulkhead insert cooperating with said spinner insert for releasably mounting within the blade opening, wherein said bulkhead insert and said spinner insert form a continuation of an exterior surface of the contoured spinner for all degrees of rotation of the propeller blade about the longitudinal axis of the propeller blade.

5,702,234

FLUID PUMP WITH BEARING SET HAVING LUBRICATION PATH

Ferdinandus A. Pieters, Camas, Wash., assignor to Micropump, Inc., Vancouver, Wash.

Filed Dec. 1, 1995, Ser. No. 566,300

Int. Cl.[6] F04B 17/00; F04C 2/18; 15/00

U.S. Cl. 417—53 8 Claims

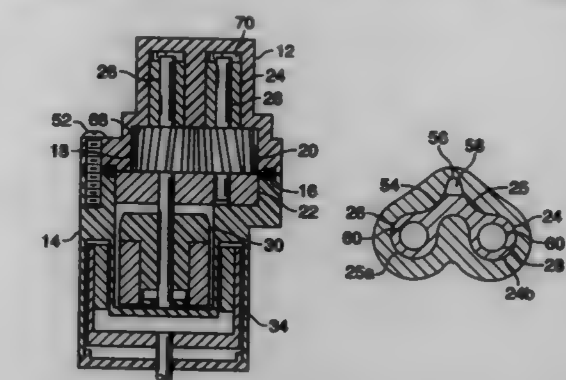

1. A method of lubricating bearings in a gear pump, comprising the steps:

(a) casting a housing having a gear cavity and a bearing receptacle, the housing further having a fluid inlet recess and a fluid outlet recess;

(b) casting bearings having cylindrical portions coupled by an interconnecting bridge and installing the bearings into the bearing receptacle, wherein the bearings do not completely fill the bearing receptacle thus defining a fluid path that originates at the fluid outlet recess and extends between the bearings and the bearing receptacle and terminates at the fluid inlet recess;

(c) installing gears into the gear cavity, the gears including axles that extend through the gears and are rotatably supported by the bearings;

(d) installing the housing with bearings and gears onto a manifold having a fluid inlet port and a fluid outlet port that are in fluid communication with the respective fluid inlet recess and fluid outlet recess; and

(e) driving the gears so as to create a pressure differential, wherein the pressure differential causes fluid to flow through the fluid path.

5,702,235

CAPACITY CONTROL DEVICE FOR VALIABLE-CAPACITY COMPRESSOR

Hisatoshi Hirota, and Naoyuki Ito, both of Tokyo, Japan, assignors to TGK Company, Ltd., Tokyo, Japan

Filed Apr. 9, 1996, Ser. No. 629,606

Claims priority, application Japan, Oct. 31, 1995, 7-283140; European Pat. Off., Mar. 7, 1996, 96103572

Int. Cl.[6] F04B 1/26

U.S. Cl. 417—222.2 15 Claims

1. A capacity control device for a variable-capacity compressor, said variable-capacity compressor having 1) a rocking member with an inclination angle that is variable with respect to a rotating shaft in an airtight crank case, the rocking member being driven by rotational motion of said rotating shaft for rocking motion, and 2) a piston, connected to said rocking member, for discharging a refrigerant into a discharge chamber after sucking the refrigerant from a suction chamber into a cylinder for compression by reciprocating, said capacity control device controlling the capacity of said variable-capacity compressor by varying the difference between a pressure in said crank case and a pressure in said suction chamber to vary the inclination angle of said rocking member and hence to change the discharge amount of refrigerant, said control device comprising:

a high-pressure valve portion for opening or closing a fluid communication path between said discharge chamber and said crank case, said high-pressure valve portion having an effective pressure-receiving area;

a low-pressure valve portion for opening or closing a fluid communication path between said suction chamber and said crank case;

a valve operating member coupled to said high-pressure valve portion and to said low-pressure valve portion and operable to reverse an open-close relationship between said high-pressure valve portion and said low-pressure valve portion by advancing or retreating;

a pressurising chamber for applying pressure to said valve operating member in a direction that opens said high-pressure valve portion, said pressurizing chamber having an effective pressure-receiving area that is larger than the effective pressure-receiving area of said high-pressure valve portion;

and a pilot valve portion having an effective pressure-receiving area that is smaller than said effective pressure-receiving area of said high-pressure valve portion; and

an electromagnetic solenoid that drives said pilot valve portion to open or close a fluid communication path between said discharge chamber and said pressurising chamber.

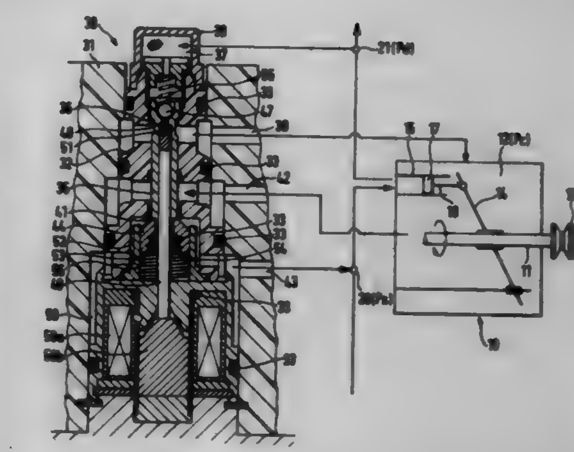

5,702,236

RECIPROCATING PISTON TYPE COMPRESSOR HAVING A DISCHARGE CHAMBER WITH A PLURALITY OF PULSATION ATTENUATING SUBCHAMBERS

Hayato Ikeda, Kariya, Japan, assignor to Kabushiki Kaisha Toyoda Jidoshokki Seisakusho, Kariya, Japan

Filed Feb. 21, 1995, Ser. No. 391,439

Claims priority, application Japan, Feb. 23, 1994, 6-025331

Int. Cl.[6] F04B 1/12

U.S. Cl. 417—269 4 Claims

4. A reciprocating piston type compressor including:

a cylinder block provided with a plurality of parallel cylinder bores formed therein and arranged around an axial drive shaft for driving reciprocating pistons in the cylinder bores;

a valve assembly arranged at an axial end of said cylinder block and provided with suction and discharge ports respectively communicating with said plurality of cylinder bores; and

a housing means sealingly attached to the same axial end of said cylinder block via said valve assembly and defining therein a suction chamber receiving a refrigerant gas before compression and a discharge chamber receiving therein a compressed refrigerant gas, said suction chamber fluidly communicating with said suction ports of said valve assembly and said discharge chamber fluidly communicating with said discharge ports of said valve assembly,

wherein said discharge chamber is isolated from said suction chamber by a wall, extending annularly so as to surround said suction chamber; and

wherein said discharge chamber comprises a plurality of subchambers communicating, respectively, with said plurality of

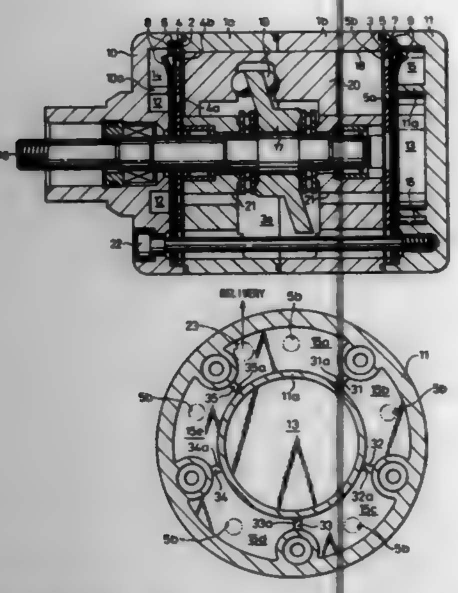

discharge ports of said valve assembly so as to attenuate pulsative components of discharge pressure of said compressed gas discharging from said respective cylinder bores, said sub-chambers being sectioned by radial ribs extending from an end face of said housing means toward said valve assembly, said respective radial ribs defining fluid passageways in the form of a flow choke, arranged between ends of said ribs and said valve assembly so as to provide a fluid communication among said plurality of sub-chambers; said radial ribs extending from an inner end face of said housing means, which is perpendicular to an axis of the axial drive shaft, toward the valve assembly, said ribs being integral with the inner end face of said housing means; and

wherein said discharge chamber further comprises one additional sub-chamber having no direct communication with any one of said discharge ports of said valve assembly, and having direct fluid communication with a delivery port delivering said compressed refrigerant gas toward a refrigerating circuit which incorporates therein said reciprocating piston type compressor, said additional sub-chamber being sectioned from neighboring ones of said sub-chambers by ribs which are arranged so as to extend from said end face of said housing means to define fluid passageways in the form of a fluid choke, and are arranged adjacent to said valve assembly, said fluid passageways providing communication between said additional sub-chamber and said neighboring sub-chambers.

5,702,237

IN TANK FUEL PUMP FILTER

Gerald A. Hill, Cass City, Mich., assignor to Walbro Corporation, Cass City, Mich.

Filed Nov. 3, 1995, Ser. No. 552,799

Int. Cl.⁶ F04B *23/00*

U.S. Cl. 417—313 **13 Claims**

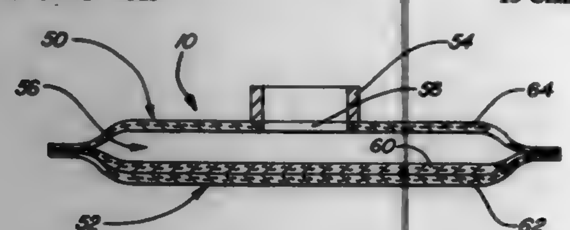

1. A fuel delivery system for an internal combustion engine comprising; a fuel pump constructed and arranged to be disposed in a fuel tank with a pump inlet disposed at a lower portion of the tank for drawing fuel therefrom and a pump outlet for delivering fuel under pressure to the engine, and a fuel filter immediately adjacent the bottom of the tank through which fuel from the fuel tank is drawn into said fuel pump, said fuel filter having spaced apart upper and lower wall portions at least in part defining an interior cavity between them communicating with the pump inlet and each constructed of a material with a plurality of openings and having an average opening size not greater than about 100 microns and the lower wall portion has at least one of an average opening size not greater than about 60 microns or an average thickness of the lower wall portion which is at least 1.5 of the average thickness of the upper wall portions and in assembly in the fuel tank the lower wall with said lower wall portion located immediately adjacent the bottom of the fuel tank, the upper wall portion spaced above it, and the lower wall portion providing a finer filtration and a greater resistance to fuel flow than the upper wall portion so that in operation of the fuel pump, a greater proportion of cleaner fuel from the tank flows through the upper wall portion of the filter and the dirtier fuel flowing through the lower wall portion of the filter is more finely and completely filtered than the fuel flowing through the upper wall portion.

5,702,238

DIRECT DRIVE GAS COMPRESSOR WITH VENTED DISTANCE PIECE

Daniel Cecil Simmons, Box 402, Pouce Coupe, B.C., Canada, V0C 2C0; Walter James Forsyth, 9021 Elwood Drive, Dawson Creek, B.C., Canada, V1G 3M8, and Reggald Emory Isley, Grande Prairie, Canada, assignors to Daniel Cecil Simmons, Pouce Coupe, and Walter James Forsyth, Dawson Creek, both of Canada

Filed Feb. 6, 1996, Ser. No. 595,880

Int. Cl.⁶ F04B *17/05*

U.S. Cl. 417—380 **8 Claims**

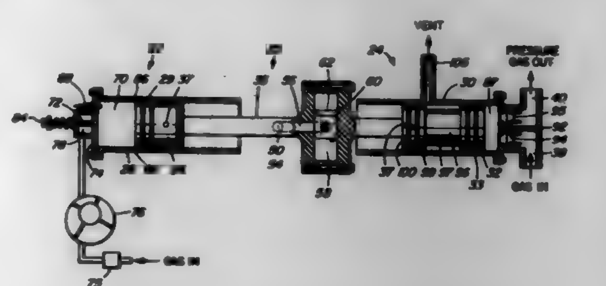

1. A gas compressor comprising:

(a) an engine cylinder (28) having a longitudinal axis;

(b) an engine piston (26) slidably and sealingly mounted in said engine cylinder (28);

(c) a compressor cylinder (30) coaxial with said engine cylinder (28);

(d) a compressor piston (32) slidably and sealingly mounted in said compressor cylinder (30);

(e) a rigid link (35) connecting said engine piston (26) and said compressor piston (32); and

(f) a crankshaft (50) having a journal (54) extending through, and slidable along, a transversely extending aperture (58) in said rigid link (35)

wherein said compressor piston comprises head and skirt portions each sealingly slidable in said compressor cylinder and a rigid distance piece connecting said head and skirt portions and wherein a cavity between said distance piece and an inner wall of said compressor cylinder is vented.

5,702,239

AIR PUMP WITH DUAL AIR INTAKES

Hsi-Kung Yang, No. 20, Lane 164, Yang-Ming Street, Pan-Chiao, Taipei Hsien, Taiwan

Filed Jan. 6, 1997, Ser. No. 779,122

Int. Cl.⁶ F04R *1/00*

U.S. Cl. 417—512 **2 Claims**

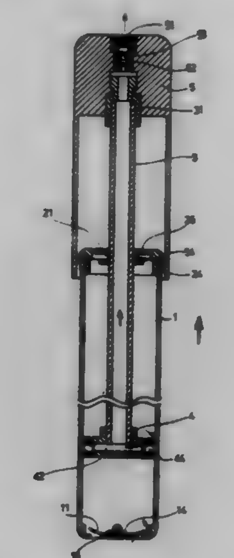

1. An air pump having dual air intakes, comprising:

a pump body having an enclosed end with a securing point at the center of an inner side thereof and an open end provided with inner threads, said enclosed end having a plurality of air inlets defined therethrough;

a cover having outer threads at its periphery, said cover connecting to said open end of said pump body, said cover having a securing point at its inner side and being provided with a plurality of air inlets, said cover further having a central hole defined therethrough;

two diaphragms, one of which has a diameter slightly smaller than the inner diameter of said pump body and is connected to the inner side of said enclosed end of said pump body to be retained by said securing point of said enclosed end, the other of which has a diameter slightly smaller than the inner diameter of said cover and is connected to the inner side of said cover to be retained by said securing point of said cover, both of said diaphragms covering said air inlets;

a piston rod, said piston rod being a hollow tube having one end passing through said central hole of said cover into said pump body;

a piston connecting to an inner end of said piston rod, said piston being placed inside said pump body and having an annular groove at its periphery, said annular groove being provided with a plurality of through holes communicating with said piston rod;

an annular gasket received in said annular groove of said piston, said annular gasket displacing with said piston to locate at a position opposite to that of the direction of displacement;

a pump head connecting to a projected end of said piston rod, said pump head having a passage in the middle and not covering said air inlets of said cover;

an air outlet in communicating with an outer side of said passage of said pump head; and

a check valve connected to an inner side of said passage of said pump head and communicating with said piston rod, whereby

when said pump head is worked to cause said piston to reciprocate within said pump body, said piston displaces away from said cover so that said diaphragm of said cover is opened, drawing air in via said air inlets of said cover, with said diaphragm of said pump body being closed, air at that part then travels via said piston and said piston rod to escape through said air outlet and said piston displaces near said cover so that said diaphragm of said pump body is opened, drawing air in via said air inlets of said pump body, with said diaphragm of said cover being closed, air at that part then travels via said piston and said piston rod to escape through said air outlet, thus accomplishing cycles of continuous air intake by said air inlet of said cover and said air inlet of said pump/body alternately, while accomplishing cycles of continuous air discharge by said air outlet of said piston rod.

5,702,240

ROTARY POSITIVE DISPLACEMENT BLOWER HAVING A DIVERGING OUTLET PART

Alan D. O'Neal, Willard; Michael D. Stone, Rogersville, and Carl R. Coles, Springfield, all of Mo., assignors to Tuthill Corporation, Chicago, Ill.

Filed May 5, 1995, Ser. No. 437,147

Int. Cl.⁶ F04C *18/18*

U.S. Cl. 418—9 **13 Claims**

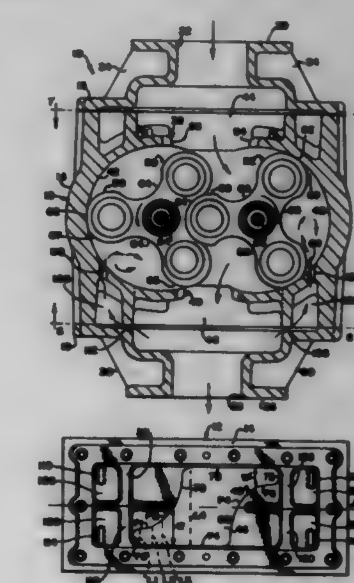

1. A rotary positive displacement blower for producing a flow of fluid, said blower including:

a housing having a rotor chamber, an inlet port and an outlet port, said outlet port having a width dimension and a length dimension

a first rotor located in said rotor chamber, said first rotor having a plurality of lobes and being rotatable about a first axis in a first direction of rotation,said first rotor forming a plurality of first pockets, each said first rotor, each said first pocket adapted to rotate into fluid communication with said inlet port to receive fluid through said inlet port and to rotate into fluid communication with said outlet port to deliver fluid through said outlet port as said first rotor rotates; and

a second rotor located in said rotor chamber, said second rotor having a plurality of lobes and being rotatable about a second axis in a second direction of rotation, which is opposite to said first direction of rotation, said second rotor forming a plurality of second pockets, each said second pocket being located between adjacent lobes of said second rotor, each said second pocket adapted to rotate into fluid communication with said inlet port to receive fluid through said inlet port and to rotate into fluid communication with said outlet port to deliver fluid through said outlet port as said second rotor rotates;

said outlet port of said housing having a first end located generally adjacent said first rotor and a second end located generally adjacent said second rotor a first edge extending from adjacent said first end in a first plane which is generally perpendicular to said first and second axes of said rotors second edge extending from adjacent said second end in a second plane which is generally perpendicular to said first and second axes of said rotors and generally parallel to and spaced

apart from said first plane a third edge which extends from adjacent said first end to said second edge and a fourth edge which extends from adjacent said second end to said first edge said third and fourth edges each being generally convexly curved.

whereby the area of said outlet port which becomes exposed to said pocket of said first rotor increases as said first rotor rotates.

5,702,241

SCROLL-TYPE FLUID DISPLACEMENT APPARATUS HAVING SEALING MEANS FOR CENTRAL PORTIONS OF THE WRAPS

Takayuki Matsumoto; Yasuomi Matsumoto, and Hiroshi Fujita, all of Isesaki, Japan, assignors to Sanden Corporation, Gunma, Japan

Filed Apr. 17, 1996, Ser. No. 633,441

Claims priority, application Japan, Apr. 19, 1995, 7-119225

Int. Cl.[6] F01C *1/04; 19/08*

U.S. Cl. 418—55.4 6 Claims

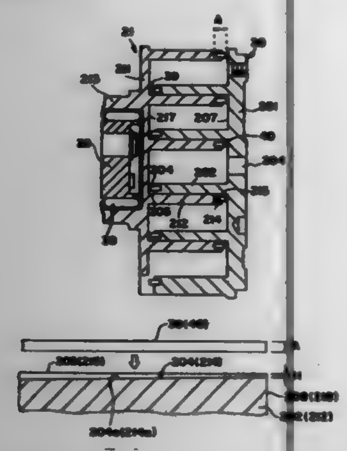

1. A scroll-type fluid displacement apparatus comprising:

a pair of scrolls each having an end plate and a spiral wrap extending from a side of said end plate, said spiral wraps interfitting at an angular and radial offset to form a plurality of line contacts which define at least one pair of fluid pockets;

a driving mechanism operatively connected to a first scroll of said scrolls to orbit said first scroll relative to a second scroll of said scrolls, while preventing rotation of said second scroll, to thereby change a volume of said at least one pair of fluid pockets; and

sealing means disposed in at least one axial end of said spiral wraps for sealing said at least one pair of fluid pocket when defined by a central portion of said spiral wraps, said sealing means including a protruding portion protruding from said at least one axial end of said spiral wraps, wherein a height of said protruding portion increases towards a radial inner end of said spiral wraps.

5,702,242

VANE PUMP

Thomas Nied-Menninger; Randolf Körtge, both of Usingen, and Bernd Dexfeld, Bad Homburg, all of Germany, assignors to Luk Fahrzeug-Hydraulik GmbH & Co., Bad Homburg, Germany

Filed Apr. 26, 1995, Ser. No. 429,417

Claims priority, application Germany, Apr. 26, 1994, 44 15 214.0; Feb. 14, 1995, 195 04 773.7

Int. Cl.[6] F04C *2/00*

U.S. Cl. 418—150 3 Claims

1. A vane pump, comprising:

a housing;

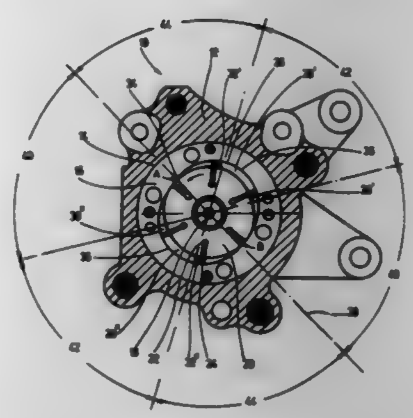

a cam ring located in the housing and having an inner double-symmetrical contour defining two diametrically opposite pump chambers;

a rotor arranged within the inner contour of the cam ring; and

Six radially displaceable vanes supported on the rotor, spaced from each other by 60°, and displaceable along the inner contour of the cam ring during rotation of the rotor;

wherein the inner contour in a region of each pump chamber is divided in three sections, with a first section forming a suction region, a second section forming a pressure region, and a third section forming a separation region between the suction and pressure regions, and with each section occupying an angular region of 60°,

wherein radial acceleration of a vane in the separation region is zero,

wherein the inner contour of the cam ring has two smooth regions defining chamber separation regions between the pressure region of one of the pump chambers and the suction region of another of the pump chambers, and the pressure region of the another of the pump chambers and the suction region of the one of the pump chambers, whereby no discontinuous change in a radial speed characteristic of a vane displacement, which is influenced by the inner contour of the cam ring, takes place, and

wherein the inner contour of the cam ring has no arcuate regions in the chamber separation regions, and a radial speed of a vane increases continuously in the chamber separation region from a maximum negative speed to a maximum positive speed.

5,702,243

HYDRAULIC MOTOR WITH PRESSURE COMPENSATED END PLATES

C. Richard Gerlach, Pleasanton, Tex., assignor to RHI Joint Venture, Corpus Christi, Tex.

Filed Aug. 7, 1996, Ser. No. 689,322

Int. Cl.[6] F03C *2/22*

U.S. Cl. 418—132 7 Claims

1. A hydraulic motor comprising:

a rotor having two ends;

a stator having two ends;

first and second seal plates having interior and exterior ends, the interior ends of the seal plates adjacent to the ends of the stator and the ends of the rotor;

an intake annulus defined by an interior end of a first housing and the exterior end of the first seal plate, for injecting high pressure hydraulic fluid into a radial space defined by the rotor and the stator;

an exhaust annulus defined by an interior end of a second housing and the exterior end of the second seal plate, for exhausting low pressure hydraulic fluid from the radial space defined by the rotor and the stator; and

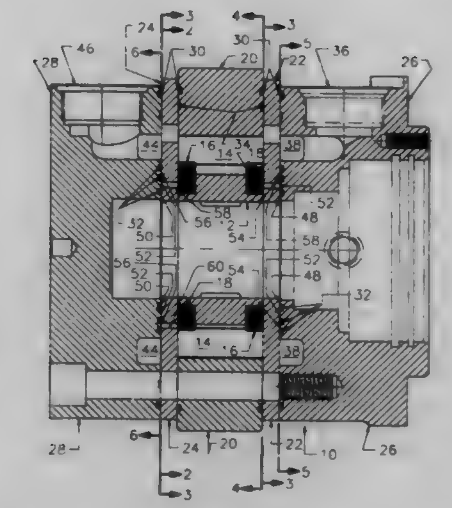

means for asymmetrically and hydraulically compensating for different hydraulic pressures exerted on the exterior of the seal plates from the intake and exhaust annuli.

5,702,244

APPARATUS AND METHOD FOR REDUCING PARTICULATE EMISSIONS FROM COMBUSTION PROCESSES

David B. Goodson, Mill Creek, and Robert N. McRuer, Seattle, both of Wash., assignors to Thermal Energy Systems, Incorporated, Woodinville, Wash.

Continuation-in-part of Ser. No. 260,096, Jun. 15, 1994, abandoned. This application Jun. 15, 1995, Ser. No. 490,597

Int. Cl.[6] F23B *7/00;* F24C *1/14*

U.S. Cl. 431—2 17 Claims

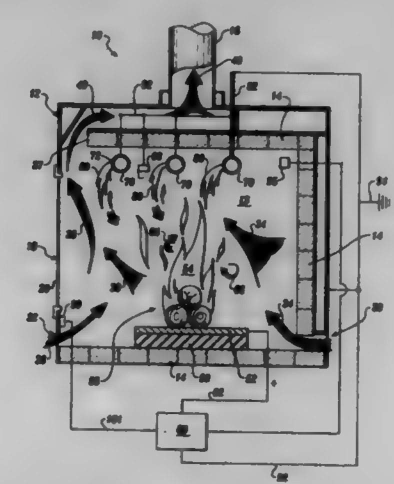

1. A method of reducing particle emissions from a combustion process, the method comprising:

(a) combusting a fuel source with primary and secondary air to produce a combustion flame within a combustion zone;

(b) applying a high voltage electrical field between a pair of electrodes through the combustion zone to reduce the amount of particles leaving the combustion zone, wherein one of the pair of electrodes is a hollow electrode located in touching relationship to flames of said zone; and

(c) supplying the secondary air through perforations in the hollow electrode to the combustion zone.

5,702,245

CONVEYOR FOR PROCESSING EQUIPMENT HAVING GAS FLOW COMPENSATION

Eugene J. London, Sandusky, Ohio, assignor to Stein, Inc., Toledo, Ohio

Filed Mar. 20, 1996, Ser. No. 618,552

Int. Cl.[6] A47J *37/00;* A21B *1/00;* F24C *15/32;* F24D *1/00*

U.S. Cl. 432—14 25 Claims

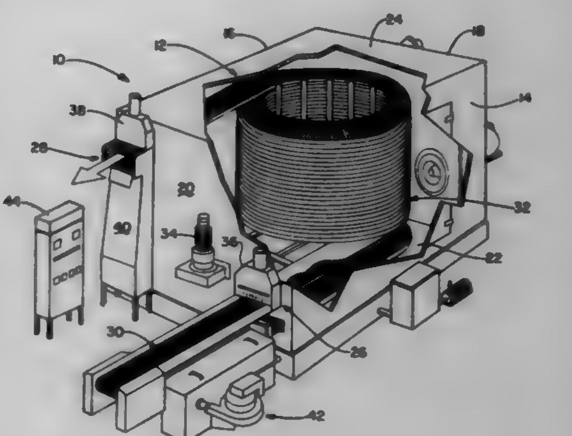

1. A processing apparatus for processing products using a gaseous processing media, said apparatus comprising:

an enclosed processing chamber containing a gaseous processing media, said enclosed processing chamber having an inlet opening and an outlet opening;

an endless conveyor including at least one interior and exterior link member, and having a plurality of support members extending between said interior and exterior link members with a pervious products support surface extending between adjacent support members on which products are placed for processing within said chamber, said conveyor transporting said products from outside said chamber through said inlet opening, through a generally helical path within said chamber to expose the products to the gaseous processing media in said chamber and out of said outlet opening, said conveyor having an exterior and interior portions when traveling in said generally helical path; and

a plurality of gas flow compensation members positioned intermediate said support members to deflect a portion of the gaseous processing media from said exterior portion of said conveyor toward said interior portion of said conveyor.

5,702,246

SHAFT FURNACE FOR DIRECT REDUCTION OF OXIDES

Oscar G. Dam, Puerto Ordaz, Venezuela, assignor to Xera Technologies Ltd., Grand Cayman, Cayman Islands

Filed Feb. 22, 1996, Ser. No. 603,922

Int. Cl.[6] F27D *1/08*

U.S. Cl. 432—95 14 Claims

1. A shaft furnace for the reduction of oxides, comprising:

shaft means having wall means defining an oxide inlet, a pre-heating and pre-reducing zone downstream of said oxide inlet, a reducing zone downstream of said pre-heating and pre-reducing zone, a transition zone downstream of said reducing zone, and a discharge zone downstream of said transition zone;

an annular gas reforming zone within said wall means, said annular gas reforming zone having an internal surface, said internal surface having a catalyst thereon for reforming a methane-containing gas into a reformed gas in said annular gas reforming zone; and

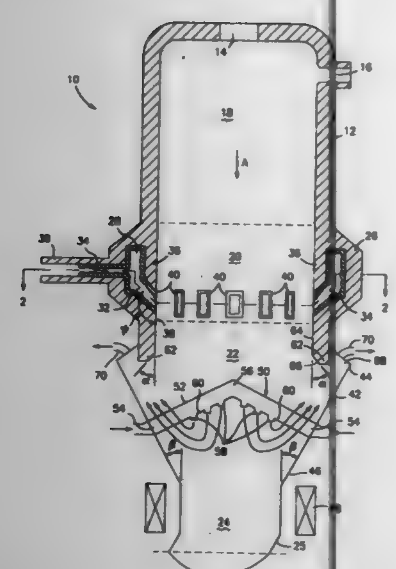

passage means for communicating said reformed gas in said reforming zone with said reducing zone whereby oxides in said reducing zone are reduced by said reformed gas.

5,702,247
KILN LINING AND METHOD
William H. Schoof, Peach Springs, Ariz., assignor to Chemical Lime Company, Fort Worth, Tex.
Filed Jun. 6, 1996, Ser. No. 659,443
Int. Cl.⁶ F27B *7/28*
U.S. Cl. 432—103 **14 Claims**

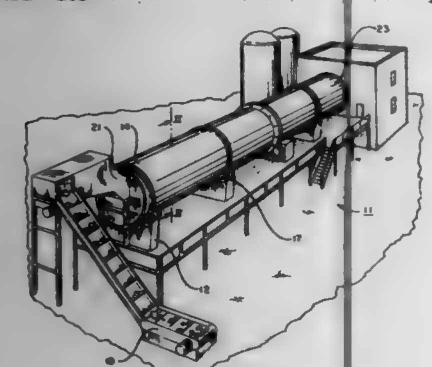

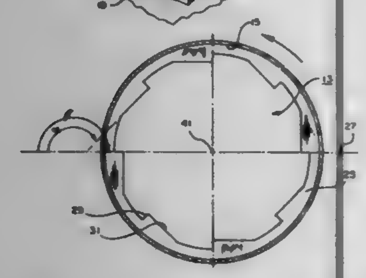

1. In a rotary reactor having a substantially cylindrical, horizontally-oriented, elongate chamber for burning materials therein, the chamber having an interior surface and having means for rotating the chamber, the improvement comprising:
a plurality of lifter sections extending along the interior surface of the chamber for lifting material from a lower portion of the chamber to an upper portion thereof as the chamber rotates and for gradually dumping the material being lifted thereby from the upper portion of the chamber, each lifter section being formed as a monolithic casting of a refractory material having a polygonal cross section including a series of blunt faces alternating with a series of slanted faces, and wherein the slanted faces are aligned with a direction of rotation of the reactor such that the lifter sections only undergo compression from the material being lifted during rotation of the chamber with the slanted faces of the refractory material first contacting the material being lifted; and wherein
the means for rotating the chamber rotates the chamber in said given direction.

5,702,248

Patent Not Issued For This Number

5,702,249
MODULAR INTRA-ORAL IMAGING SYSTEM VIDEO CAMERA
David H. Cooper, 13668 Ronnie Way, Saratoga, Calif. 95070
Filed May 19, 1995, Ser. No. 445,011
Int. Cl.⁶ A61C *3/00*
U.S. Cl. 433—29 **31 Claims**

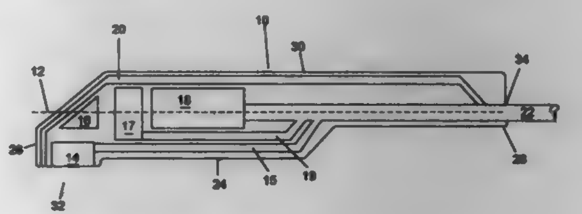

1. A dental video camera for use in displaying images from inside a patient's mouth onto a monitor, comprising:
a. a housing, having defined therein
i. a handle portion, and
ii. a distal end, which includes a view port;
b. a sensor assembly, mounted in said distal end of the housing and optically aligned substantially along a longitudinal axis through said housing, for converting to data signals images which have entered the camera through said view port;
c. a reflector located in the optical path to said sensor assembly and suitable for directing images from at least 90 degrees away from said longitudinal axis into said sensor assembly; and
d. utility conveying means for conveying power and control signals into and data signals out of the camera.

5,702,250
COMPACT DENTAL IMPRESSION TRAY FOR PHOTOCURABLE IMPRESSION MATERIAL
Cary A. Kipke, Woodbury, Minn., assignor to Minnesota Mining and Manufacturing Co., St Paul, Minn.
Filed Jul. 19, 1996, Ser. No. 684,522
Int. Cl.⁶ A61C *1/00;3/00*
U.S. Cl. 433—37 **27 Claims**

1. A dental impression tray comprising:
a body having a channel for receiving a quantity of photocurable dental impression material, said body having a lingual side and a buccolabial side;
at least one solid state light emitter coupled to said body for directing light into said channel; and
at least one battery electrically connected to said at least one light emitter and coupled to said body, said at least one battery

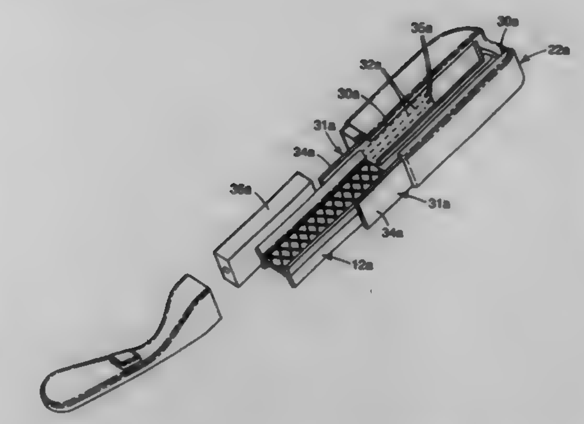

extending along at least one of said lingual side and said buccolabial side of said body.

5,702,251
APPLICATOR FOR APPLYING A BLEACHING AGENT TO TEETH AND METHOD THEREFOR
Robert A. McClintock, II, Playa Del Rey, 6525 Esplanade St., Calif. 90293
Continuation of Ser. No. 327,977, Oct. 24, 1994, Pat. No. 5,573,399. This application May 31, 1996, Ser. No. 656,522
Int. Cl.⁶ A61C *17/02;5/00;9/00*
U.S. Cl. 433—80 **24 Claims**

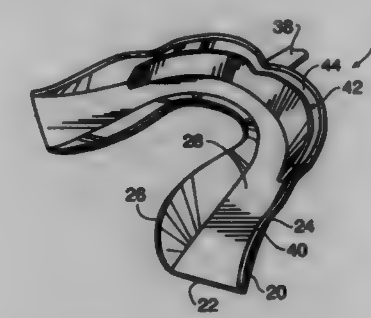

1. A bleaching tray for applying a bleaching composition to the teeth of a user, said tray comprising:
a) an arch-shaped outer wall adapted to extend around the exterior surface of the teeth of a user in the arch of the user;
b) an arch-shaped inner wall connected to said outer wall and adapted to extend around and substantially engage the interior surface of the teeth in the arch of the user; and
c) said inner and outer walls being sized and shaped to form a recess which receives the arch of the user when in use, the interior surface of said outer wall being slightly spaced from the exterior surface of the teeth in the frontal portion of the arch; and
d) an insert removably located in said recess and which has an upstanding insert wall spaced apart from an inner surface of the outer wall by a small distance to define a bleaching agent receiving reservoir when removed, said insert being present in said recess when the tray is fitted to a user and removed thereafter so that when used on a user with a bleaching agent the interior surface of the outer wall is spaced from the exterior surface of the teeth in the frontal portion of the arch, such that the bleaching agent receiving reservoir around the front of the teeth allows the bleaching agent introduced into the reservoir to be in contact with the teeth.

5,702,252
THERMALLY STABILIZED CASTING CORE
Dan Paul Rogers, Royal Palm Beach, Fla., and Edward Freer Smith, III, Madison, Conn., assignors to Implant Innovations, Inc., Palm Beach Gardens, Fla.
Filed Mar. 1, 1995, Ser. No. 396,758
Int. Cl.⁶ A61C *8/00*
U.S. Cl. 433—173 **40 Claims**

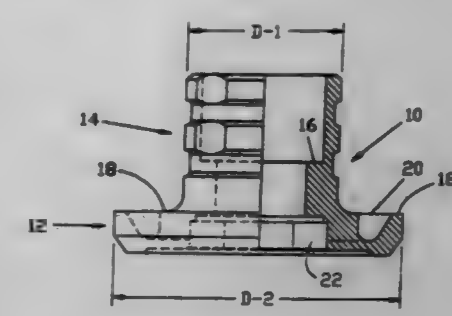

1. A unitary core having a generally annular base part and a generally tubular mounting part arrayed endwise with a common passage through them, said core intended to support a body formed on its exterior from molten metal, said passage terminating in a recessed socket within said base part for connecting said core anti-rotationally to an implant, said base part having a larger external diameter than said mounting part, providing a substantially annular shelf extending radially outward relative to said mounting part in the vicinity of the junction betwen said two parts, and distortion relief means in said base part for minimizing shape distortion of said recessed socket resulting from contact with said molten metal.

5,702,253
PERSONALITY TESTING APPARATUS AND METHOD
Nathan K. Bryce, P.O. Box 15935, Phoenix, Ariz. 85060, and Russell R. Kesterson, 3801 E. Lincoln Dr., Paradise Valley, Ariz. 85253
Filed Jul. 10, 1995, Ser. No. 416,084
Int. Cl.⁶ G09B *19/00*
U.S. Cl. 434—236 **10 Claims**

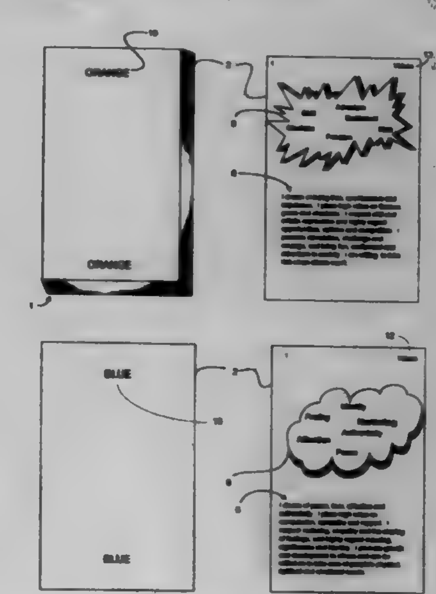

1. An apparatus for personality testing, said apparatus comprising:
a card deck having a plurality of testing cards, each of said cards having a top face upon which is located a written statement of

a personality characteristic and wherein each card also has a bottom surface having an identifier that identifies the card as being from one of four different color groups, said top and bottom surfaces being opposed to each other such that a person being tested cannot see the color identifier when viewing the top surface thereby avoiding any prejudicial effect; and

a plurality of labeling cards, wherein each of said labeling cards is used to label an area upon which said testing cards may be placed and wherein each labeling card includes a first indicia that describes a degree of strength of agreement a user may have with the written statements provided on the testing cards, and wherein all of the labeling cards have different first indicia, said labeling cards also having a second indicia that describes a numerical point value that should be given to any of said testing cards that are placed into an area associated with said labeling card and wherein all of said labeling cards have different second indicia such that after a numerical value is given to each card the value of cards of the same color can be added and compared to the numerical total of other color groups.

5,702,254

COMBINATION RECEPTACLE FOR INTERCHANGEABLE LAMPS IN CIRCUIT BOARDS

Duane Eugene Whitson, Amboy; Michael Joseph O'Connor, and Curtis Allen Stapert, both of Kokomo, all of Ind., assignors to Delco Electronics Corporation, Kokomo, Ind.

Filed Jan. 13, 1997, Ser. No. 783,839

Int. Cl.^{6} H01R *9/09*

U.S. Cl. 439—57 **8 Claims**

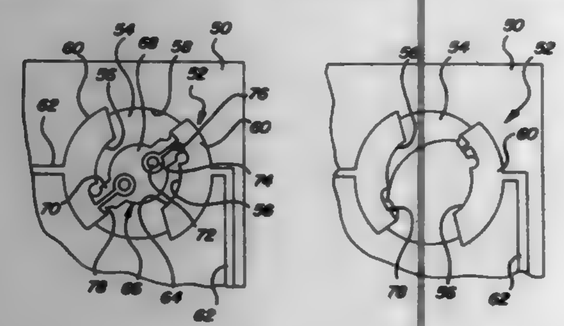

1. A combination lamp receptacle which permits initial installation of a first type of lamp and replacement by another type of lamp in a circuit board comprising:

a first receptacle concentrically positioned within a second receptacle so that the first receptacle interferes with the second receptacle until the first receptacle is removed;

the first receptacle being supported within the second receptacle by circuit board bridge means, the bridge means being subject to breaking for removal of the first receptacle;

each receptacle having conductive contacts coupled to conductors on the circuit board.

5,702,255

BALL GRID ARRAY SOCKET ASSEMBLY

James V. Murphy, Warwick; Michael J. Murphy, East Greenwich; Burton Fisher, and Robert Taylor, both of Coventry, all of R.I., assignors to Advanced Interconnections Corporation, West Warwick, R.I.

Filed Nov. 3, 1995, Ser. No. 552,602

Int. Cl.^{6} H01R *9/09*

U.S. Cl. 439—71 **8 Claims**

1. A ball grid array socket assembly comprising:

an electrically insulative socket body having upper and lower surfaces and a plurality of vias extending through said socket

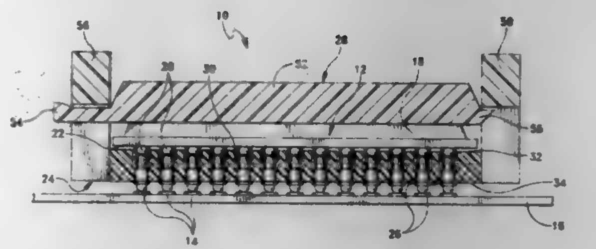

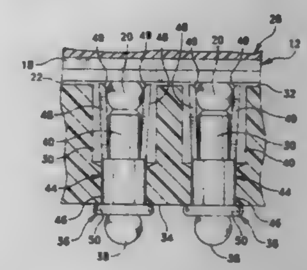

body between said upper and lower surfaces, said plurality of vias being arranged in a predetermined footprint corresponding to an array of a ball contacts on a bottom surface of a ball grid array package;

a plurality of electrically conductive contact assemblies respectively disposed within corresponding vias, each of said contact assemblies comprising a pin member including an upper end which is disposed within the via, and further including a lower terminal end which projects downwardly from the lower surface of the socket body for engaging another contact,

said contact assembly further comprising a contact member having a generally tubular body portion received in close-fitting contact around the upper end of the pin member, and a tubular contact portion which extends upwardly from the body portion past the upper end of the pin member, said tubular contact portion engaging side portions of the ball contacts when a ball grid array package is seated on the upper surface of the socket body; and

and retention means for releasably retaining said ball grid array package in assembles relation with said socket body.

5,702,256

LAND GRID ARRAY SOCKET FOR USE WITH INTEGRATED CIRCUIT MODULES OF DIFFERENT SIZES INCLUDING MODULES WHICH ARE LARGER THAN THE SOCKET

E. Thomas Severn, El Dorado Hills, Calif., assignor to Intel Corporation, Santa Clara, Calif.

Filed Dec. 28, 1995, Ser. No. 579,796

Int. Cl.^{6} H05K *1/00*

U.S. Cl. 439—71 **8 Claims**

1. A socket for coupling a land grid array (LGA) module to a circuit board, the LGA module having a first set of land pads for coupling a first integrated circuit device on the LGA module to a circuit board, the socket comprising:

a non-conductive base for seating the LGA module in the socket;

a first set of contacts extending through the base for electrically coupling the socket to the circuit board; and

an alignment feature configured on the base around the first set of contacts for aligning the LGA module in the socket such that the first set of land pads is aligned with the first set of contacts, the alignment feature having an opening providing

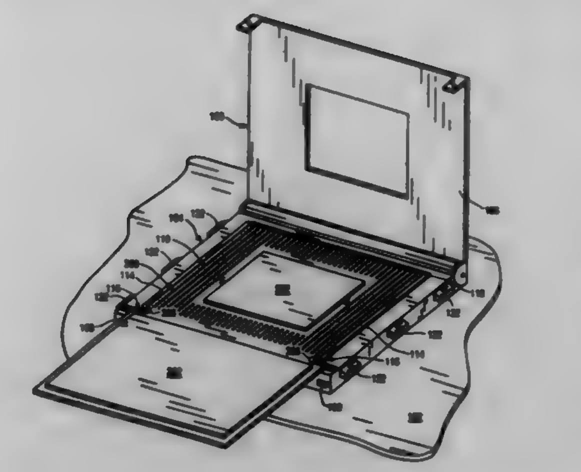

for at least one side of the LGA module to extend outside of the socket boundary.

5,702,257

ELECTRICAL CONNECTOR AND TERMINAL THEREFOR

Wayne Leroy Millhimes, Hershey, Pa., assignor to The Whitaker Corporation, Wilmington, Del.

Filed Feb. 29, 1996, Ser. No. 610,099

Int. Cl.^{6} H01R *9/09*

U.S. Cl. 439—79 **5 Claims**

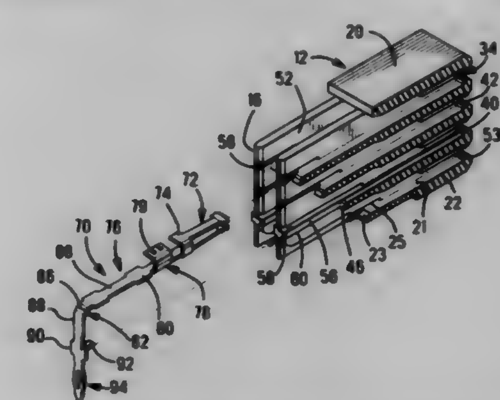

1. An improved right angle electrical connector for mounting to a circuit board and including a housing and a plurality of right angled terminals, each disposed in a respective terminal receiving passageway of said housing, said terminals including first and second connecting portions extending respectively from intermediate horizontal and vertical body portions joined at the right angle, the second connecting portions having compliant sections for insertion into respective through-holes of a circuit board when pushing force is applied to the connector, and said horizontal body portion including a first push surface adapted to cooperate with a push surface along a wall of a respective said passageway when said connector is mounted to said circuit board, the improvement comprising:

said vertical body portion of at least one of said plurality of terminals includes a second push surface proximate said second connecting section and facing away from the circuit board, and

at least one wall of said housing having a board-facing surface that defines a second terminal body engaging push surface and is defined as a lower surface of a guide rail, and associated with said second push surface of each said at least one terminal,

whereby, when said connector is mounted to said board by applying force to a top of said housing, said housing walls push against both said body portions to urge said second connecting portions into force fit relationship within corresponding apertures of said circuit board, thereby pushing said at least one terminal at two spaced locations and keeping said terminals stabilized and in axial alignment as said connector is mounted to the board.

5,702,258

ELECTRICAL CONNECTOR ASSEMBLED FROM WAFERS

Daniel B. Provencher, Weare, N.H.; Philip T. Stokoe, Attleboro, and Mark W. Gailus, Somerville, both of Mass., assignors to Teradyne, Inc., Boston, Mass.

Filed Mar. 28, 1996, Ser. No. 623,582

Int. Cl.^{6} H01R *9/09*

U.S. Cl. 439—79 **21 Claims**

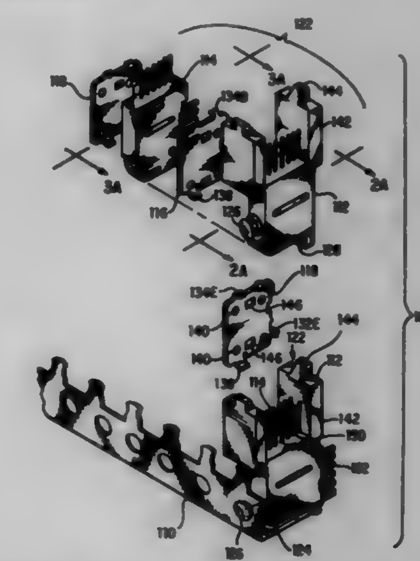

1. A modular electrical connector comprising:

a) a metal stiffener; and

b) a plurality of signal contact modules attached to the metal stiffener without use of an intermediate insulative housing to hold the modules, each signal contact module comprising:

i) an insulative housing having a first and a second insulative shroud portions integrally formed therewith,

ii) a plurality of contact elements extending through the insulative housing, each contact element having a tail portion extending from the insulative housing and a contact portion extending from the insulative housing between the first and second shroud portions.

5,702,259

SAFETY SOCKET AND PLUG ARRANGEMENT

Chiu-Shan Lee, No. 4, Alley 14, Lane 53, Hung-Tao St., Hsi-Chih Town, Taipei County, Taiwan

Filed Aug. 12, 1996, Ser. No. 695,594

Int. Cl.^{6} H01R *13/453*

U.S. Cl. 439—137 **10 Claims**

1. A safety socket and plug arrangement comprising a socket unit for the connection of an electric plug, and a plug unit for connection to an electric socket, said socket unit comprising a plurality of slots in a front side thereof adapted for receiving the metal contact blades of an electric plug, and a plurality of electric terminals disposed in said slots, wherein: said socket unit comprises a baffle holder having a horizontal sliding rod and two recessed portions equally spaced from said horizontal sliding rod at two opposite sides, a safety baffle plate turned about and moved along said horizontal sliding rod, and two spring elements bilaterally connected between said baffle holder and said safety baffle plate to impart a forward pressure to said safety baffle plate, said safety baffle plate comprising a center axle hole which receives said horizontal sliding rod, two first top slopes disposed at two

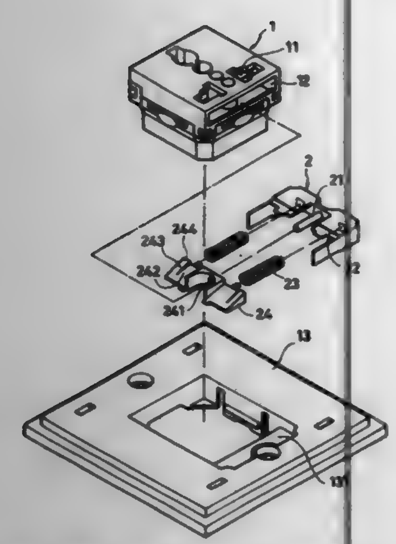

opposite sides, two second top slopes disposed at two opposite sides between said center axle hole and said first top slopes at a lower elevation than said first top slopes, each of said first top slopes having a top end terminating in a top flange, said safety baffle plate being forced forwards by said spring elements to block up said electric terminals from the slots of said socket unit, or moved backwards to compress said spring elements upon the insertion of the metal contact blades of an electric plug into the slots of said socket unit, for permitting the metal contact blades of the inserted electric plug to make contact with the electric terminals of said socket unit, said safety baffle plate being tilted to force the top flange of one of said first top slopes into engagement with one recessed portion of said baffle holder and prohibited from backward movement when a rod member is inserted through one slot of said socket unit and pressed on one of said top slopes.

5,702,260
ROTARY CONNECTOR

Hironori Kato, Sendai; Masanori Nakao, Furukawa, and Yuichi Ida, Miyagi-ken, all of Japan, assignors to Alps Electric Co., Ltd., Tokyo, Japan

Division of Ser. No. 401,598, Mar. 9, 1995, Pat. No. 5,562,466. This application Apr. 16, 1996, Ser. No. 632,943

Claims priority, application Japan, Mar. 9, 1994, 6-38346; May 20, 1994, 6-106839

The portion of the term of this patent subsequent to Jan. 31, 2015, has been disclaimed.

Int. Cl.^{6} H01R *35/04*

U.S. Cl. 439—164 **3 Claims**

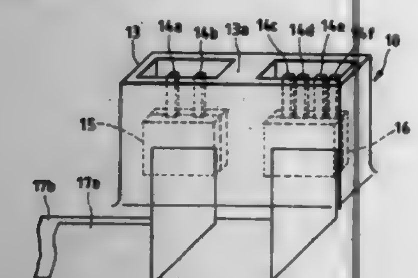

1. A rotary connector comprising:
a first housing;
a second housing rotatably coupled to the first housing, the first and second housings defining an annular space therebetween; and
first and second pluralities of conductors wound in the annular space, first and second ends of each of the first and second pluralities of conductors being electrically connected to an exterior of the first and second housings, at least one of said first and second ends of each of said first and second pluralities of conductors being connected to a corresponding terminal of a direct connector provided on one of said first and second housings,
wherein said direct connector has a partitioning wall for separating a first set of said terminals connected to said first pluralities of conductors from a second set of said terminals connected to said second pluralities of conductors.

5,702,261
AUTO-TERMINATION NETWORK CABLE CONNECTOR

Tsan-Chi Wang, Hsin-Tien, Taiwan, assignor to Insert Enterprise Co., Ltd., Hsin-Tien, Taiwan

Filed Apr. 10, 1996, Ser. No. 630,575

Int. Cl.^{6} H01R *29/00*

U.S. Cl. 439—188 **2 Claims**

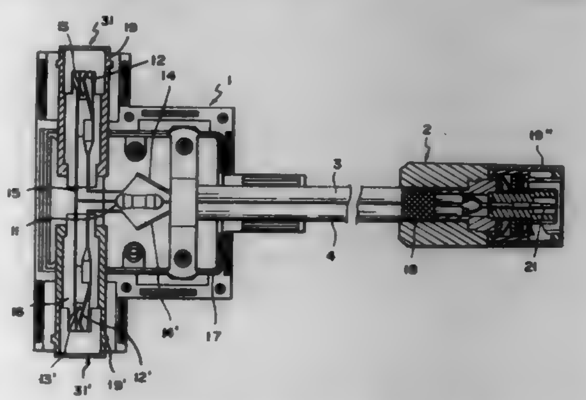

1. An auto-termination network cable connector for a computer network system, comprising an auxiliary connector for connection to a network cable of a computer network system, a main connector having a central pin and a tubular side terminal around said central pin for connection to a workstation computer, and a plurality of coaxial cables connected between said auxiliary connector and said main connector, wherein: said auxiliary connector comprises a first BNC jack and a second BNC jack at opposite ends of the auxiliary connector for connection to the network cable of the computer network system, each of said BNC jacks comprising a central terminal, a tubular side terminal around said central terminal, and a metal spring plate connected to the central conductor of one of said coaxial cables and having a lug disposed in contact with said central terminal, said metal spring plate being connected to the central pin of said main connector, permitting an electric signal to be transmitted from the metal spring plate of said first BNC jack through the central pin of said main connector to the metal spring plate of said second BNC jack, the central terminal of said first BNC jack being the central terminal of said second BNC jack and connected to the outer conductors of each of said coaxial cables through a resistor, permitting the tubular side terminals of said first BNC jack and second BNC jack and said main connector to be electrically connected to said central terminal through said resistor; said auxiliary connector comprising an external metal shield surrounding said resistor, the central conductors of said coaxial cables, and said central terminal to protect these elements from electromagnetic interference.

5,702,262
CONNECTOR ASSEMBLY

Gregory S. Brown, Ventura; Frank Quach, Northridge, and Jose Silva, Reseda, all of Calif., assignors to Trompeter Electronics, Inc., Westlake Village, Calif.

Filed Oct. 4, 1996, Ser. No. 725,849

Int. Cl.^{6} H01R *29/00*

U.S. Cl. 439—188 **35 Claims**

1. In combination,
a first connector having a first electrically conductive probe and a first shield casing, the first probe being disposed in a coaxial and insulated relationship with the first shield casing,

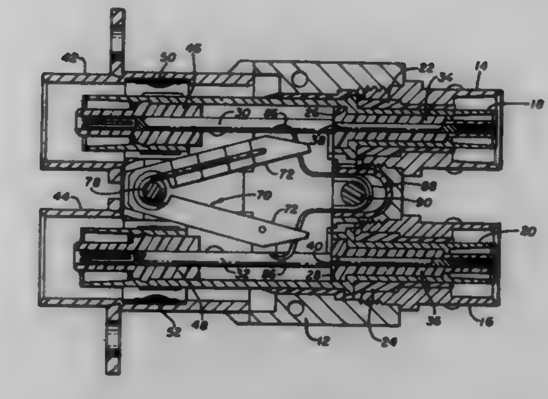

a second connector having a second electrically conductive probe and a second shield casing, the second probe being disposed in a coaxial and insulated relationship with the second shield casing,
the first and second shield casings being disposed in a spaced and insulated relationship to each other,
first means having first and second spring arms made from an electrically insulating material and biased toward an engaged relationship with associated ones of the first and second probes,
first resilient means made from an electrically conductive material and extending between the ends of the first and second spring arms in one operative relationship to establish electrical contacts with the first and second probes in the one operative relationship,
second resilient means made from an electrically conductive material and extending between the ends of the first and second spring arms to establish electrical continuity with the first and second shield casings in the one operative relationship, and
the individual ones of the first and second spring arms being respectively movable into a displaced relationship of the first resilient means relative to the associated ones of the first and second probes and into a displaced relationship of the second resilient means relative to the associated ones of the first and second shield casings to disestablish electrical continuity between the resilient member and the associated ones of the probes and the shield casings.

5,702,263
SELF LOCKING CONNECTOR BACKSHELL

Frederick B.B. Baumann, Claremont, and Louis E. Spears, Rancho Cucamonga, both of Calif., assignors to HiRel Connectors Inc., Claremont, Calif.

Filed Mar. 12, 1996, Ser. No. 614,465

Int. Cl.^{6} H01R *4/38*

U.S. Cl. 439—321 **26 Claims**

1. A self-locking connector backshell for a connector assembly, a circular toothed accessory ring axially projecting from the connector assembly, the connector backshell comprising:
(a) a backshell body for receiving conductor elements;
(b) a circular toothed backshell ring axially projecting on an accessory pitch circle from the backshell body about a backshell axis for engaging the accessory ring at respective first and second accessory ramp angles θ1 and θ2, the ramp angles θ1 and θ2 reflecting axial movement of the backshell body within a distance ξ away from the accessory ring in response to rotation of the backshell body about the backshell axis relative to the accessory ring in opposite directions from seated engagement with the accessory ring;
(c) a threaded clamping ring rotatably coaxially supported on the backshell body, the clamping ring being threadingly engageable with the connector assembly in respective clamping and unclamping directions of rotation therewith for holding the backshell body in axial engagement with the accessory ring, the angle θ1 corresponding to rotation of the backshell body in the clamping direction relative to the accessory ring;

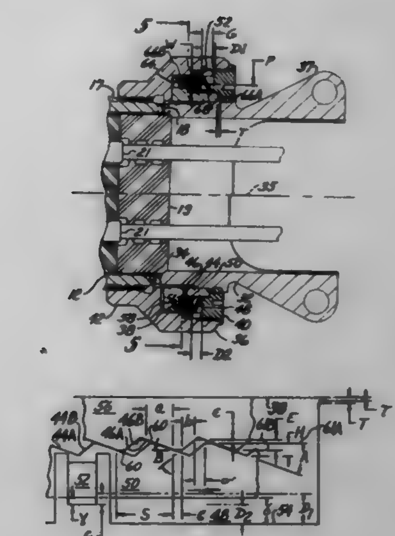

(d) a multiplicity of first detent members supportively coaxially located in a fixed angular relation to the clamping ring;
(e) a multiplicity of second detent members supportively coaxially located in a fixed angular relation to the backshell body, the first and second detent members being simultaneously engagable on a detent pitch circle, wherein the first and second detent members engage at a first contact angle A between a tangent of the pitch circle and a first surface of contact between each first detent member and a contacting second detent member during rotation of the clamping ring in the clamping direction relative to the backshell body, the first and second detent members also engaging at a second contact angle B between a tangent of the pitch circle and a second surface of contact between each first detent member and a contacting second detent member during rotation of the clamping ring in the unclamping direction relative to the backshell body; and
(f) biasing means for axially holding the first and second detent members in facing engagement, the angle A being sufficiently less than the angle θ1 and the angle B being sufficiently less than the angle θ2 for permitting rotation of the clamping ring to effect seated engagement and disengagement between the backshell body and the connector assembly without producing jamming from the backshell body being driven axially away from the accessory ring by sliding engagement between the backshell ring and the accessory ring when the clamping ring is rotated.

5,702,264
CONNECTOR FOR ELECTRIC CAR

Takayoshi Endo; Kazuhisa Ishizaki; Satoshi Yamada, and Takeyuki Hamaguchi, all of Shizuoka, Japan, assignors to Yazaki Corporation, Tokyo, Japan

Filed May 22, 1996, Ser. No. 651,583

Claims priority, application Japan, May 24, 1995, HEI. 7-125192

Int. Cl.^{6} H01R *4/50*

U.S. Cl. 439—346 **5 Claims**

1. A connector, comprising:
a housing;
a female terminal including an electrical contact portion for receiving an electrical contact portion of a male terminal, said female terminal mounted in said housing, said contact portion of said female terminal having an exposed portion which is exposed out of said housing;
tapered holes formed in said exposed portion;
ball bearings received respectively in said tapered holes;
a slide cover slidably mounted on an outer periphery of said housing, said slide cover having projected portions formed on

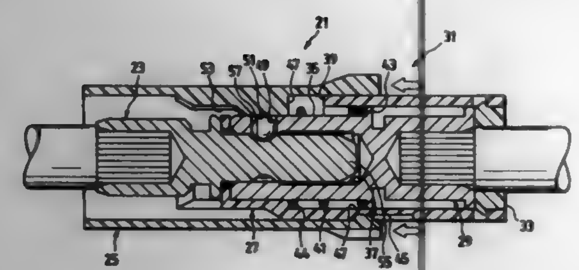

an inner surface thereof so as to limit outward movements of said ball bearings from said tapered holes when said projected portions are over said tapered holes, and said slide cover having retraction grooves for receiving said ball bearings released by said projected portions when said slide cover slides; and

a groove formed around said contact portion of said male terminal, said groove receiving said ball bearings projected to an inside of said contact portion of said female terminal when said male terminal is inserted into said female terminal.

5,702,265

CONNECTOR STRUCTURE

Noboru Yamaguchi, Shizuoka, Japan, assignor to Yazaki Corporation, Tokyo, Japan

Filed Dec. 19, 1996, Ser. No. 770,157

Claims priority, application Japan, Dec. 27, 1995, HEI. 7-341197

Int. Cl.^{6} H01R *13/54*

U.S. Cl. 439—352 **3 Claims**

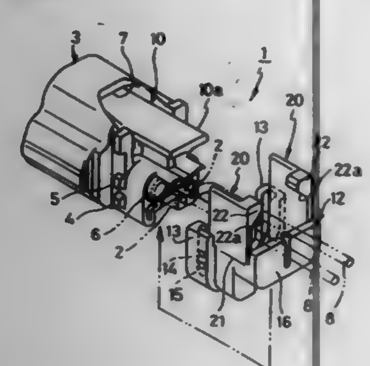

1. A connector structure comprising:
a housing having a rear end portion;
a locking arm which is integral with said housing, and is engaged with a mating connector, said locking arm being elastically deformed to disengage from said mating housing;
a rear holder including at least one locking groove which is coupled to a locking protrusion of the rear end portion of said housing, and regulates movement of terminals accommodated in said housing; and
flexible operating walls with unlock portions herein, which are able to be pressed towards each other and said locking arm to engage with both side edges of said locking arm, thereby to elastically deform said locking arm downwardly;
wherein said operating walls are formed on said rear holder; and
wherein said operating walls are bendable with lower ends thereof as fulcrums which are located below a center of said housing, wherein the rear holder may be made of optionally selected material different from the housing.

5,702,266

ELECTRICAL CONNECTOR LATCHING SYSTEM

Dennis Boyd Jones, Tustin, Calif., assignor to Molex Incorporated, Lisle, Ill.

Filed May 3, 1996, Ser. No. 646,733

Int. Cl.^{6} H01R *13/627*

U.S. Cl. 439—357 **14 Claims**

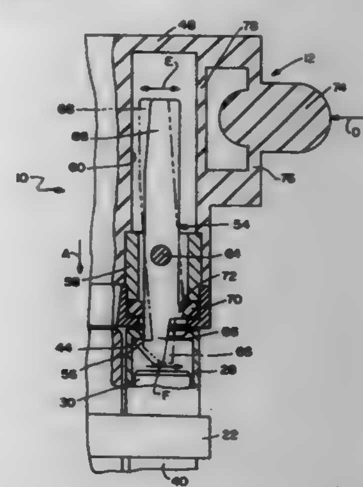

1. An electrical connector, comprising:
a shell having a forward connecting section for connection with a complementary connector in a mating direction;
a latch member extending in said mating direction and including a latch end pivotable between a latch position in latching engagement with a latching surface on the complementary connector and a release position disconnected from the complementary connector, and an actuator end for moving the latch end; and
a housing of resilient dielectric material overmolded about portions of the shell and the latch member and including an integrally molded actuator portion disengaged from the actuator end of the latch member when the latch end is in the latch position, said actuator portion for engaging and moving the actuator end of the latch member and, in turn, moving the latch end of the latch member to its release position.

5,702,267

STRUCTURE OF LAMP SOCKET

Ming-Hsiung Chen, 16, Alley 3, Lane 227, Nung-An St., Taipei City, Taiwan

Filed Oct. 23, 1995, Ser. No. 546,820

Int. Cl.^{6} H01R *4/24*

U.S. Cl. 439—419 **3 Claims**

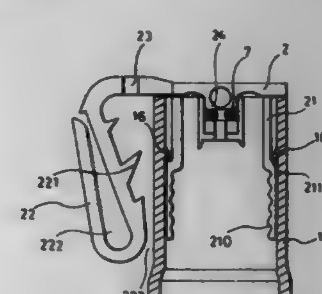

1. A lamp socket comprising a socket body to hold a lamp bulb, an electric wire fastened to a top transverse wire groove on said socket body, a center metal contact plate and a side metal contact plate respectively fastened to a first through hole and a second through hole on said socket body, and a socket cap fastened to said socket body to hold down said electric wire, causing said center metal contact plate and said side metal contact plate to make electrical contact with a respective conductor of said electric wire,

wherein: said center metal contact plate has a flanged transverse head at one end fastened to a retaining groove inside said first through hole, a pointed upright tip adjacent to said flanged transverse head for piercing the electric wire to make electrical contact with one conductor thereof, and a springy tail at an opposite end disposed inside said socket body and supported on at least one first inside projecting bearing portion inside said socket body for contact with the tip contact of the lamp bulb in said socket body; said lamp cap including a bottom pressure block pressed against said electrical wire, two downward plugs at two opposite sides respectively inserted into a respective plug hole on said socket body, and a curved clamping plate raised from the periphery of the socket body, each downward plug having a step at an outer side engaged with a respective projecting block inside said socket body and a threaded portion at an inner side for engaging the ring contact of the lamp bulb, said curved clamping plate including a plurality of toothed portions, which face the periphery of said socket body, a second clamping portion defined on an inner side for fastening to a tree twig, a bigger tree branch or eaves, etc., and a first clamping portion defined outside the socket body between said curved clamping plate and said socket body for fastening to a tree branch, a gutter, etc., and a keyhole-like slot at one side for fastening to the wall by a nail.

5,702,268

CHRISTMAS LAMP SOCKET

Tzung-Min Lien, and Tzung-Shih Lien, both of Chu Nan Chen, Taiwan, assignors to Chen Yn Enterprise Co., Ltd., Miao Li Hsien, Taiwan

Filed Jun. 4, 1996, Ser. No. 657,561

Int. Cl.^{6} H01R *4/24*

U.S. Cl. 439—419 **3 Claims**

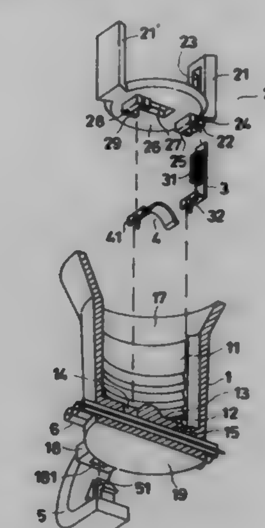

1. A Christmas lamp socket comprising:
a first conductor having an elastic touching part projecting on an upper portion thereof and a piercing part protruding from a bent lower end thereof;
a second conductor having an arcuately curved mediate portion and a piercing part projecting from a bent end adjacent to said curved mediate portion;
an affixing part having a bottom portion, a first and a second erection parts arranged opposite to each other adjacent to said bottom portion;
said bottom portion having a through hole, the curved mediate portion of the second conductor being inserted through said through hole of said bottom portion;
said first erection part having a holding chamber, said first conductor being inserted into and secured inside the holding chamber; an elogate opening being provided on the first erection part adjacent to the holding chamber; the elastic touching part projecting from the elongate opening after said insertion of the first conductor;
a first shaped block on the bottom portion, the first shaped block holding said bent lower end of said first conductor therein and having apertures to secure the piercing part of the first conductor in position after said insertion of the first conductor;
a second shaped block on the bottom portion, said second shaped block holding said bent end of the second conductor therein and having apertures to secure the piercing part of the second conductor after said insertion of the second conductor;
a housing member having an inner circumference defining a central hollow thereof, an opening on an upper part thereof, a bottom and a mediate portion defining a lower end of said central hollow; said opening being provided for a bulb to be inserted therethrough into said central hollow;
said inner circumference having a pair of opposing elongate trenches to detain a respective one of said first and second erection parts therein upon insertion of said affixing part into said central hollow;
said housing member being made with a plurality of cords being simultaneously held between said bottom and said mediate portion thereof;
said mediate portion having two through holes communicating with said cords held between said bottom and said mediate portion, said piercing parts of the first and second conductors being passed through a respective one of said through holes of said mediate portion in order for said piercing parts to penetrate insulation covers of said cords and connect with inner conducting wires of said cords upon said insertion of said affixing part.

5,702,269

ELECTRICAL CONNECTOR

Masaki Uchida, 2-52-9-306, Higashi-Tokorozawa, Tokorozawa, Saitama, Japan, 359; Takaki Naito, 6-11-6-802, Koyodai, Inagi, Tokyo, Japan, 206; Hiroshi Shirai, 3-32-15-205, Higashitokorozawa, Tokorozawa, Tokyo, Japan, 359; Koichi Iino, 1119-111, Ida, Nakahara-ku, Kawasaki, Kanagawa, Japan, 211, and Hiroyuki Okazaki, 6-8-15, Yokodai, Sagamihara, Kanagawa, Japan, 229

Filed Oct. 25, 1996, Ser. No. 738,138

Claims priority, application Japan, Oct. 31, 1995, 7-306564

Int. Cl.^{6} H01R *13/04*

U.S. Cl. 439—496 **3 Claims**

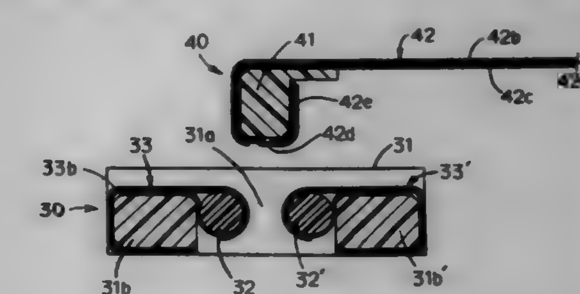

1. An electrical connector for interconnecting a flexible printed circuit with a printed circuit board, the electrical connector comprising:
a plug connector including a plug housing having an end portion of the flexible printed circuit fastened thereon; and
a socket connector including a socket housing which defines a cavity open through a top of the socket housing and dimensioned to receive the plug connector therein, a flexible film which carries a plurality of conductors and is wrapped around so as to be in direct contact with a substantial portion of an elastomer, the elastomer being disposed in the cavity with the conductors being arrayed for mating engagement with respective circuit paths on the flexible printed circuit, and the flexible film being fastened to a bridge part of the socket housing adjacent to the cavity.

5,702,270
SURGICAL HANDPIECE HOLDER
Peter D. Casica, San Juan Capistrano, and James Y. Chon, Chino Hills, both of Calif., assignors to Alcon Laboratories, Inc., Fort Worth, Tex.
Filed Dec. 14, 1995, Ser. No. 572,486
Int. Cl.⁶ H01R *13/60*
U.S. Cl. 439—528 **15 Claims**

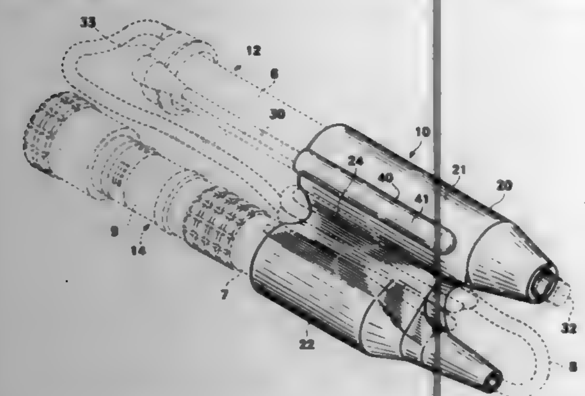

1. A surgical handpiece holder comprising:
(a) a scabbard having a first longitudinal bore, the first longitudinal bore being sized and shaped to receive a surgical handpiece;
(b) an electrical connector housing having a second longitudinal bore, the second longitudinal bore having at least one annular groove; and
(c) a bridge, generally concave in transverse cross-section shorter in length than the scabbard and the electrical connector housing and being longitudinally disposed between the scabbard and the housing.

5,702,271
ULTRA LOW PROFILE BOARD-MOUNTED MODULAR JACK
Joseph Richard Steinman, Flower Mound, Tex., assignor to The Whitaker Corporation, Wilmington, Del.
Filed Aug. 30, 1996, Ser. No. 697,798
Int. Cl.⁶ H01R *23/02*
U.S. Cl. 439—676 **6 Claims**

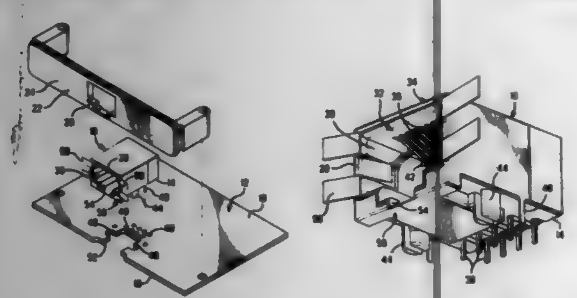

1. An arrangement of a modular jack and a circuit board, comprising:
a modular jack including at least an insulative housing having board-mounting sections and a plurality of contact members retained therein and having board-connecting sections extending from said housing, and a circuit board having a top surface and an edge and a plurality of conductive sites corresponding to respective said board-connecting sections of said contact members, and further having mounting apertures cooperable with said board-mounting sections of said housing, said board-mounting sections of said housing and said board-connecting sections of said contact members depending below a board-mounting face of said housing abuttable against said top surface of said circuit board;
said modular jack defining a plug-receiving cavity extending inwardly from a mating face, and said contact members including respective contact sections extending into said plug-receiving cavity to be engaged by corresponding contacts of a mating plug connector received into said plug-receiving cavity, and said modular jack further including a bottom section defining at least a latch arm channel adjoining said plug-receiving cavity and extending rearwardly from said mating face at least to rearwardly facing latch surfaces;
said bottom section of said housing extending below said board-mounting face thereof forwardly of said board-connecting sections of said contact members, and said circuit board defining a recess extending inwardly from said edge complementary to said bottom section of said housing, to receive thereinto at least said bottom section of said housing,
whereby the height of a top surface of said modular jack above said top surface of said circuit board is minimized.

5,702,272
CONNECTING TERMINAL AND METHOD OR MANUFACTURING THE SAME
Yukihumi Machida, Tokyo, Japan, assignor to Ryosei Electro-Circuit Systems, Ltd., Tokyo, Japan
PCT No. PCT/JP94/01638, § 371 Date May 30, 1995, § 102(e) Date May 30, 1995, PCT Pub. No. WO95/10128, PCT Pub. Date Apr. 13, 1995
PCT Filed Sep. 30, 1994, Ser. No. 446,718
Claims priority, application Japan, Jan. 10, 1993, 5-269969; Jan. 10, 1993, 5-269970
Int. Cl.⁶ H01R *15/10*
U.S. Cl. 439—843 **2 Claims**

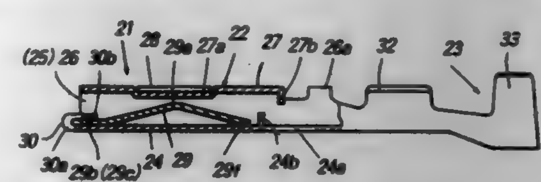

2. A connecting terminal comprising a front portion and a rear portion, a connecting portion provided at said front portion, and a clamping portion provided at said rear portion for clamping a wire, said connecting portion including a movable contact strip that is electrically connected to a cooperating connecting terminal, said movable contact strip having an upper contact portion and a front portion with engaging projections, said connecting portion is surrounded by a bottom plate, side plates extending upwardly from sides of said bottom plate and a top plate which is bent horizontally from at least one of said side plates, said bottom plate including a clamping strip with a T-shaped extension, said movable contact strip is arranged on said bottom plate with said engaging projections of said front portion directed toward said top plate, and said clamping strip is bent over backwards to sandwich said front portions of said movable contact strip between bent and unbent portion of said clamping strip, with said engaging projections of said movable contact strip engaging said T-shaped extension of said clamping strip.

5,702,273
MARINE PROPULSION SYSTEM FOR UNDERWATER VEHICLES
Chahee Peter Cho, and William P. Krol, Jr., both of Portsmouth, R.I., assignors to The United States of America as represented by the Secretary of the Navy, Washington, D.C.
Filed May 19, 1996, Ser. No. 649,971
Int. Cl.⁶ B63H *21/17*
U.S. Cl. 440—6 **5 Claims**

1. A marine propulsion system for underwater vehicles, said propulsion system comprising:

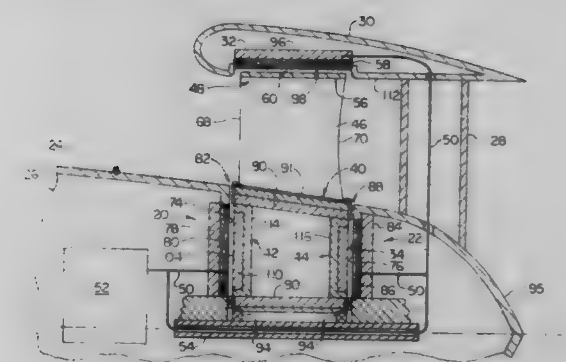

motor inner stator assemblies disposed in hull portions of said vehicle;
fixed stator blades extending outwardly from an after one of said hull portions wherein said fixed stator blades are hollow;
a shroud fixed to outer ends of said fixed stator blades and encircling said hull portions wherein said shroud is hollow;
a motor outer stator assembly disposed in said shroud;
a rotor hub disposed in an annular recess formed by said hull portions, said hub having permanent magnet assemblies therein respectively adjacent said motor inner stator assemblies, and having rotor blades mounted thereon and extending outwardly therefrom and comprising permanent magnets, outer ends of said rotor blades being adjacent said motor outer stator assembly; and
electrical conductor means extending from a power source in one of said hull portions to said motor inner stator assemblies, and through said stator blades and said shroud to said motor outer stator assembly;
whereby activation of said stator assemblies induces movement in said permanent magnet assemblies and said rotor blades to cause said rotor hub and rotor blades to rotate, said rotation of said rotor blades serving to provide propulsive thrust to said vehicle.

5,702,274
FLOTATATION DEVICE PROPELLED BY HUMAN-POWERED SKI MACHINE
Robert D. White, P.O. Box 334, Newton, Ill. 62448-0334
Continuation-in-part of Ser. No. 498,930, Jul. 6, 1995, Pat. No. 5,547,406. This application Dec. 28, 1995, Ser. No. 580,148
Int. Cl.⁶ B63H *16/00*
U.S. Cl. 440—21 **23 Claims**

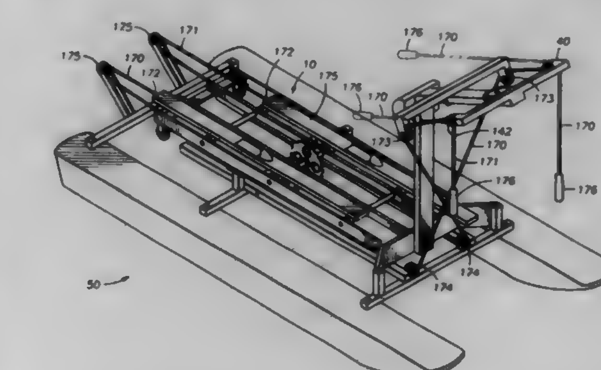

1. A human-powered floatation device for use with a ski machine having a flywheel, front support collars, and a base having two sides, said flotation device comprising:
(a) floatation means having sufficient buoyancy and stability to allow the ski machine and a human to maintain their balance on a surface of water; the flotation means comprising pontoons connected by a plurality of crossbars comprising forward and rear crossbars:
(b) means for firmly disconnectably connecting the ski machine to the floatation means comprising pegs attached to the front crossbar, spaced and sized to cooperate with front support collars of the ski machine; and support pads attached to the rear crossbar, spaced and sized to receive the two sides of the base of the ski machine;
(c) a drive pulley fixedly mounted on the floatation means for frictional engagement with the flywheel, wherein the drive pulley receives rotational forces from the flywheel;
(d) a propeller drive assembly having a propeller, the propeller drive assembly coupled to the drive pulley for communicating the rotational force to the propeller; and
(e) a steering mechanism having a rudder;
wherein the support pads are positioned at an appropriate elevation for the flywheel to firmly engage the drive pulley.

5,702,275
STEERING MECHANISM
James M. Hundertmark, 296 19th St., Fond du Lac, Wis. 54935
Filed Sep. 1, 1995, Ser. No. 523,113
Int. Cl.⁶ B63H *25/42*
U.S. Cl. 440—61 **5 Claims**

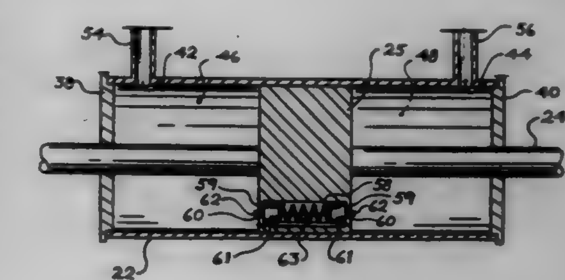

1. In a steering mechanism operably connected to the steering unit of a boat, which comprises
(a) a hydraulic cylinder having opposed stop means,
(b) a support rod extending along the longitudinally axis of said cylinder
(c) a piston affixed to said support rod and mounted in said cylinder, and
(d) fluid passageways opening to said cylinder and longitudinally spaced to each side of said piston to form opposed chambers in said cylinder, the improvement comprising:
(i) said piston adapted for reciprocal movement from a center position the full length of said cylinder and having a longitudinal bore extending substantially parallel to the longitudinal axis of said cylinder, said bore establishing fluid communication between said opposed chambers;
(ii) valve means disposed in said bore;
(iii) means to bias said valve means to a normally closed position; and
(iv) means to open said valve means when said piston is brought into abutting relationship with a stop means thereby establishing fluid communication between said opposed chambers, said valve means and said fluid passageways to allow for the flow of hydraulic fluid in one direction only.

5,702,276
WATERCRAFT CATALYTIC EXHAUST SYSTEM

Ryoichi Nakase; Shigeyuki Ozawn; Hiroaki Fujimoto, and Takehisa Suzuki, all of Hamamatsu, Japan, assignors to Sanshin Kogyo Kabushiki Kaisha, Hamamatsu, Japan

Filed Feb. 27, 1996, Ser. No. 607,800
Claims priority, application Japan, Feb. 27, 1995, 7-038150; Aug. 16, 1995, 7-208731
Int. Cl.⁶ B63H *21/32*
U.S. Cl. 440—89 **24 Claims**

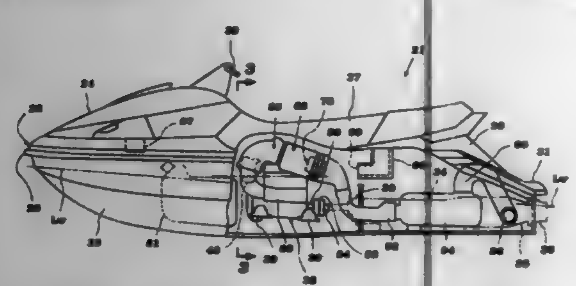

1. A personal watercraft comprising a hull defining a rider's area sized to accommodate at least one rider, said hull defining an engine compartment containing an internal combustion engine having at least one exhaust port and an output shaft, a propulsion device carried by said hull and driven by said engine output shaft, an exhaust system communicating with said engine exhaust port and delivering exhaust gases to the atmosphere, a cooling jacket juxtaposing at least a portion of said exhaust system and communicating with a cooling system of said engine such that coolant flows between said engine cooling system and said cooling jacket, and a catalyzer in said exhaust system having a catalyst bed which treats the exhaust gases before discharge to the atmosphere, said cooling jacket communicating with a first outlet port positioned upstream of said catalyzer such that at least a portion of coolant flow through said cooling jacket flows through said first outlet port.

5,702,277
HIGH PERFORMANCE SWIM FIN

John Lee Wagner, 6185 Kimberly Dr., La Mesa, Calif. 91942

Continuation-in-part of Ser. No. 291,685, Aug. 17, 1994, abandoned, which is a continuation-in-part of Ser. No. 88,515, Jul. 7, 1993, Pat. No. 5,387,145. This application Apr. 10, 1996, Ser. No. 630,200
Int. Cl.⁶ A63B *31/08*
U.S. Cl. 441—64 **11 Claims**

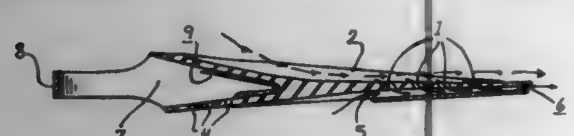

1. A foot-mounted swimming aid comprising:
a a hollow foot chamber open at the heel having an exterior surface of flexible material of sufficient size to accommodate a human foot and having a ventral lining of soft flexible material and having a series of elongated holes to vent the chamber;
b a blade portion of flexible material which can be relatively stiffer than the flexible material of said foot chamber and connects to said foot chamber and extends past the foot chamber and broadens and tapers outward toward the end forming a flexible triangular shaped web having thickened support areas along the sides and in the center to add support and tapering downwards towards the end and in between said thickened support areas hollowed-out sections in the shape of curved, elongated slots set at two different angles in the triangular web;
c a thin layer of flexible material extending from the beginning of the blade portion across the top of the blade generally to the end of the blade and connected to the blade at the thickened support areas creating openings between the side and center support areas and in between said thin layer that goes across the top of the blade portion thereby directing water to the elongated curved slots; and
d a thin strip of added flexible material extending outwardly from each side of the thickened support areas, beginning adjacent to said foot chamber and continuing down each side of said thickened support areas towards the end of said triangular shaped web and can be angled toward the ventral side of said triangular web or toward the dorsal side of said triangular web.

5,702,278
TOWABLE WATERCRAFT

Erin Boucher, 21 Hemlock Hill Rd., Amherst, N.H. 03031

Filed Nov. 13, 1996, Ser. No. 747,645
Int. Cl.⁶ B63B *1/00*
U.S. Cl. 441—66 **16 Claims**

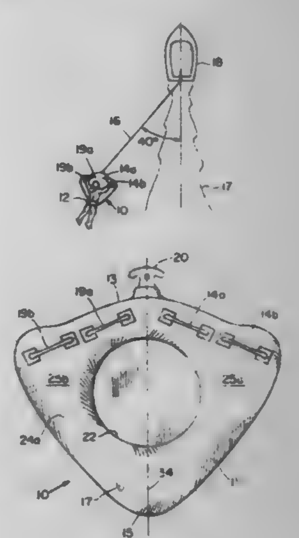

1. A towable watercraft comprising:
a watercraft body having top and bottom surfaces which are located on opposite sides of the body, the body also including front and rear ends, a central axis extending from the front end to the rear end bisecting the body into first and second sections, the body in use having a roughly v-shaped bottom;
a towing fixture affixed to the front end of the body;
a first steering fin positioned on the bottom surface of the first section;
a second steering fin positioned on the bottom surface of the second section, said v-shaped bottom allowing the first and second fins to be alternately engagable in water for turning;
a first handle unit positioned on the top surface at the front end of the first section; and
a second handle unit positioned on the top surface at the front end of the second section.

5,702,279
INFLATABLE SWIMMER'S SAFETY BELT, LIFE PRESERVER/LIFE VEST

Dennis Brown, 1358 Hooper Ave., Ste. 240, Toms River, N.J. 08753

Filed Sep. 3, 1996, Ser. No. 699,723
Int. Cl.⁶ B63C *9/16*
U.S. Cl. 441—108 **19 Claims**

1. An inflatable swimmer's safety belt, life preserver/life vest comprising:

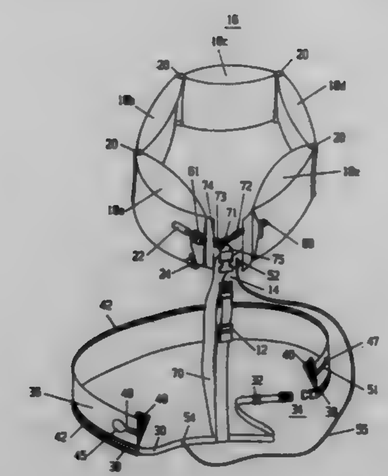

a first, substantially hollow belt, closable to fit the waist of a wearer;
a compressed gas cartridge coupled with said first belt;
a pin, moveable to puncture said cartridge so as to allow said cartridge to fill said first belt with compressed gas;
means, moveable between first and second positions, and connected to said pin, for moving said pin to puncture said cartridge when moved to said second position;
wherein a portion of said first belt fitting the waist of a wearer is temporarily secured in folded, overlapping relationship so as to unfold and expand outwardly under action of the compressed gas which fills it when said means is moved to said second position to puncture said cartridge, thereby inflating said first belt and increasing the length of said first belt in forming a tube to ride upwardly towards the arm level of the wearer;
a second belt, underlying said first belt, and also closable to fit about the waist of a wearer;
wherein each of said first and said second belts are closable by clasps to fit the waist of a wearer;
a tether connected between said first and said second belts;
and wherein means are provided on said first belt for maintaining the configuration of said tube formed by inflating said first belt, even when said clasp of said first belt is thereafter opened;
and wherein said last mentioned means include releasable couplings respectively provided adjacent opposite ends of said first belt.

5,702,280
COLOR SELECTING ELECTRODE MOUNTING FRAME FOR CRT AND PROCESS FOR PRODUCTION OF SAME

Yoshiro Horiuchi, Tokyo, Japan, assignor to Sony Corporation, Japan

Division of Ser. No. 307,005, Sep. 16, 1994, Pat. No. 5,532,546. This application Sep. 15, 1995, Ser. No. 529,212
Claims priority, application Japan, Sep. 27, 1993, 5-240177
Int. Cl.⁶ H01J *9/00*
U.S. Cl. 445—23 **6 Claims**

1. A process for the production of a color selecting electrode mounting frame for a CRT comprising the steps of Forming a pair of long members, wherein each of said long members is produced by the following steps:
blanking a plate of a fixed width into an arc of a predetermined curvature to form an arc-shaped member,
forming the arc-shaped member into an L-sectional shape having a top edge portion and having a curvature which matches a panel glass surface of the CRT and forming on the top edge portion a curved surface on which one of two opposing sides of a color selecting electrode is attached; and

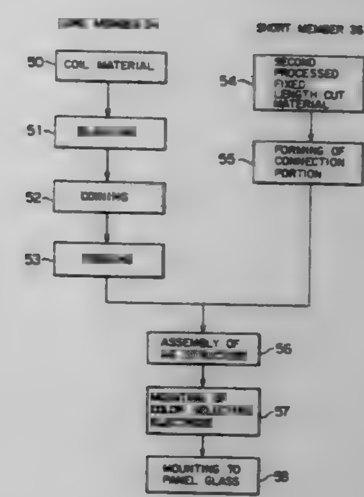

arranging said pair of said long members in parallel and joining a respective pair of short members to the bottoms of the two ends of each of said long members so as to bridge the ends of said long members.

5,702,281
FABRICATION OF TWO-PART EMITTER FOR GATED FIELD EMISSION DEVICE

Jammy Chin-Ming Huang, Taipei, and David Nan-Chou Liu, Fong-Yuani, both of Taiwan, assignors to Industrial Technology Research Institute, Hsinchu, Taiwan

Filed Apr. 20, 1995, Ser. No. 425,461
Int. Cl.⁶ H01J *9/00;9/04;* **H01L** *29/86;29/12*
U.S. Cl. 445—50 **10 Claims**

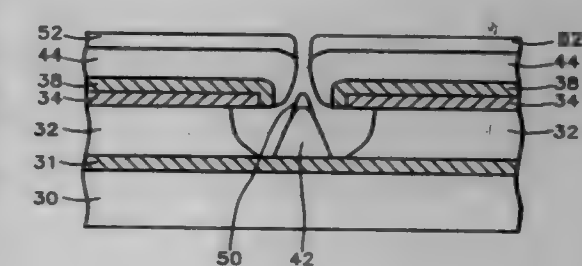

1. A method of fabricating a field emitter structure, comprising the steps of:
providing a substrate having a first conductive layer thereon, a first insulating layer over said first conductive layer, a second conductive layer over said first insulating layer, and an opening formed in said first insulating and second conductive layers;
forming a sacrificial layer over said second conductive layer;
forming a bottom portion of said field emitter structure is said opening, by vertical deposition of a conductive material, whereby a third conductive layer, having a collimated channel over said bottom portion, is formed over said sacrificial layer;
completing the formation of said field emitter structure by non-directional deposition, through said collimated channel, of a tip material on to the top of said bottom portion of said field emitter structure, whereby a top conductive layer is formed over said third conductive layer and only partially over said collimated channel, whereby the tip of said field emitter structure is formed with a rounded point; and
removing said sacrificial layer, said third conductive layer, and said top conductive layer.

5,702,282
TOY FEEDING BOTTLE ASSEMBLY
Ralph A. Beckman; Stephen A. Schwartz, both of Providence, R.I.; Roseann Radosevich, New Bedford, Mass., and Michele P. Trammell, Williamsburg, Ohio, assignors to Hasbro, Inc., Pawtucket, R.I.
Filed Jul. 31, 1996, Ser. No. 690,656
Int. Cl.[6] A63H *3/52;33/22;* **A63G** *31/00*
U.S. Cl. 446—267 **8 Claims**

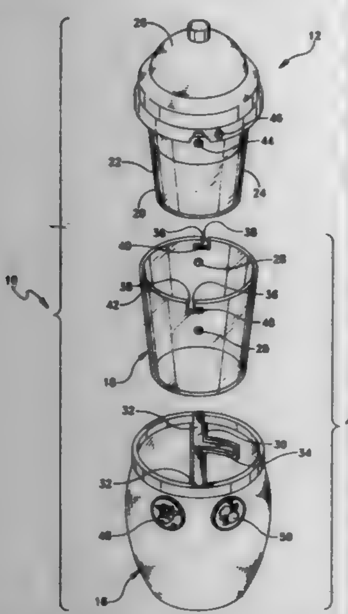

1. A toy feeding bottle assembly comprising:
a bottle including a transparent bottle portion having a liquid received therein, a cap portion received on the bottle portion and a post extending outwardly from an outer surface of the bottle portion; and
a transparent sleeve which is selectively receivable on an outer surface of said bottle portion, said sleeve being colored so as to impart a different color to the liquid when the sleeve is received on the bottle, said sleeve having a slot formed therein which is adapted and positioned for receiving said post therein, said post being slidably and rotatably engaged with said slot.

5,702,283
REAL SOUNDS TOY ENGINE
Daniel M. Watson, Jr., Moorestown, N.J.; Melvin Mednick, New City, N.Y., and Thomas M. McKeon, Mt. Laurel, N.J., assignors to Larami Limited, Mount Holly, N.J.
Filed May 31, 1996, Ser. No. 657,780
Int. Cl.[6] A63H *5/00*
U.S. Cl. 446—397 **20 Claims**

1. A real sound-producing toy engine, which comprises:
(a) a main housing having a simulated automobile engine exterior;
(b) a plurality of activation sites located at said main housing for activating a plurality of different real sounding motor-related sounds;
(c) a plurality of switches, there being at least one for each of said activation sites which is connected thereto, each of said switches having an off-position and an on-position, each of said switches being also connected to at least one sound-producing means and being connected to a power source;
(d) an engine start-up activation site being one of said plurality of activation sites and an engine start-up switch connected to said engine start-up activation site, said engine start-up switch being connected to an engine start-up sound-producing means capable of producing an engine start-up sound, including a running engine sound which simulates a turning over of an engine followed by an idling engine, said engine start-up sound-producing means being one of said at least one sound-producing means; and,
(e) at least one power source operably connected to said plurality of switches so as to activate a corresponding one of said plurality of activation sites to operate a corresponding one of said at least one of sound-producing means when said plurality of switches are in their on-positions, wherein said at least one power source is said power source when a number of said at least one power source is one.

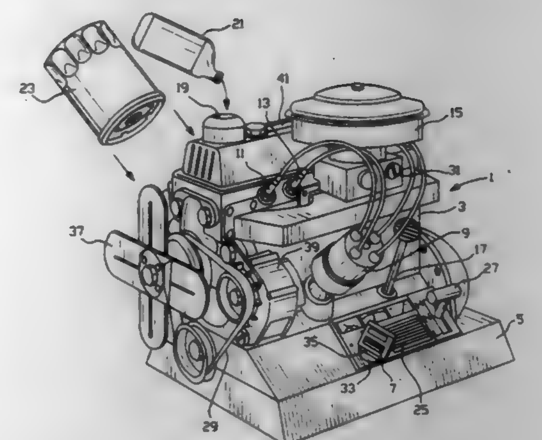

5,702,284
PARTY WHEEL
Carlos R. Gallegos, 18125 Antonio Ave., Cerritos, Calif. 90703
Filed Mar. 19, 1996, Ser. No. 617,644
Int. Cl.[6] A63H *33/30;* **G09F** *11/18*
U.S. Cl. 446—475 **3 Claims**

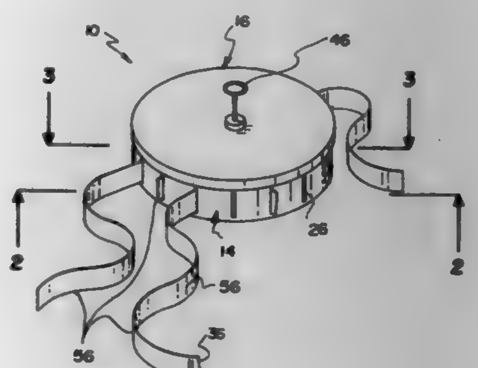

1. A new and improved party wheel for holding and dispensing decorative streamers comprising in combination:
a generally cylindrical housing having a streamer receptacle and a lid, the streamer receptacle having a bottom member and a top edge with a peripheral wall therebetween, the peripheral wall being interconnected to the bottom member, the peripheral wall being rigid and having a threaded top portion adjacent the top edge;
a plurality of rectangular slots being proportionally spaced along the peripheral wall, each slot being in a vertical orientation with respect to the bottom member and top edge of the streamer receptacle, each slot extending vertically between the bottom member and the threaded top portion of the streamer receptacle;
a plurality of spindles being interconnected to an interior surface of the bottom member of the streamer receptacle, each spindle being generally cylindrical and having a height greater than a length of each slot of the peripheral wall, each spindle being spaced from a corresponding slot of the peripheral wall of the streamer receptacle, each spindle being capable of receiving a streamer roll rotatably positioned thereon, one end of each streamer roll being threadable through the slot corresponding to the spindle supporting the streamer roll, each streamer roll capable of being spun about the spindle when the one end of the streamer roll being pulled through and away from the corresponding slot;
the lid having an upper portion with a threaded projecting flange therearound, the flange of the lid being capable of engaging the threaded portion of the peripheral wall of the streamer receptacle, the lid being capable of enclosing the plurality of spindles and the streamer of each within the housing; and
a swivel hanger being coupled to the upper portion of the lid with a coupler, the coupler being positioned through an axial bore of the lid, the swivel hanger having an eyelet being capable of allowing the housing with the rolls therein to suspend from a ceiling, the swivel hanger being capable of allowing the housing to rotate 360 degrees thereabout for release of streamers from the streamer rolls contained therein, each streamer of the streamer rolls capable of being located across the room where the housing being suspended therein.

5,702,285
ONE CUP POST-CONVALESCENT BRASSIERE
Jacqueline Orlando, 1636 NW. 51st Ter., Gainesville, Fla. 32605
Filed Jun. 27, 1996, Ser. No. 672,085
Int. Cl.[6] A41C *3/00*
U.S. Cl. 450—1 **1 Claim**

1. A garment for post-convalescent wear by women who have undergone removal of a breast and have a single remaining breast, said garment comprising:
(a) a bra cup of a generally convex shape and size adapted for receiving said remaining breast, said bra cup being provided with a support member for lending support to said remaining breast;
(b) a non-cupped flat panel of flexible material mechanically coupled to said bra cup and positioned to overlie at least a portion of the area of the chest wall of the wearer from which the removed breast has been removed when said garment is worn;
(c) a back strap mechanically coupled to said panel and to said bra cup;
(d) a first shoulder strap non-detachably connecting said bra cup to said back strap; and
(e) a second shoulder strap non-detachably connecting said panel to said back strap.

5,702,286
PRENATAL CRADLE
Christine L. Seering, 6659 Poplar, Box 443, Hamburg, Mich. 48139, and Mona E. Seering, 1818 Blue Gill Ave., Clare, Mich. 48617-9751
Continuation of Ser. No. 410,272, Mar. 24, 1995. This application Apr. 25, 1997, Ser. No. 845,579
Int. Cl.[6] A41C *1/08*
U.S. Cl. 450—155 **10 Claims**

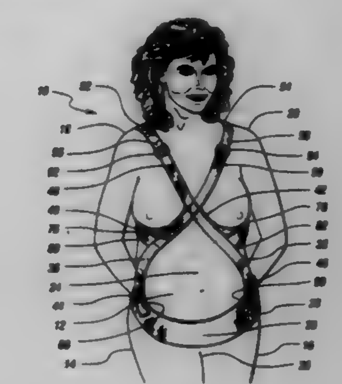

1. A prenatal cradle for supporting forward weight of pregnancy in a pregnant woman's uterus by redistributing around the hips and shoulders downward and forward pressures exerted by the baby and relieving strain on the woman's lower back, abdomen, and groin area, the prenatal cradle comprising:
a womb band for supporting the uterus, the womb band having:
a front portion which is positioned so as to allow unlimited growth of the uterus, and
an elongate rear portion, including a center section, the womb band encircling the woman below the uterus and extending upwardly over the hips and the lower back to provide support which is distributed across the uterus and lower back when the woman is standing or ambulatory;
a pair of torso bands for redistributing uterine weight across the torso, each band having:
an elongate front portion including a lower end and an upper end, the lower end of the front portion being secured to the womb band proximate the associated hip, the front portion of each torso band being affixed to each other at the intersection thereof between the woman's breasts and extending diagonally and crossing between the breasts to distribute uterine weight without interfering with the breasts,
an elongate shoulder portion, including a front section and a back section, the front section being connected to the upper end of the front portion of the associated torso band, and
an elongate back portion including an upper section and a lower section, the upper section of the back portion being connected to the back section of the associated shoulder portion;
a pair of side members to distribute the uterine weight around the trunk of the woman, the lower section of each elongate back portion being secured to a rearward end of an associated side member spaced apart from the center section of the rear portion of the womb band, the side members separating the torso bands and exposing the abdomen to avoid an inward movement of each torso band toward the neck of the wearer;
a forward end secured to the lower end of the front portion of the associated torso band, and
a rearward end secured to the center section of the rear portion of the womb band to help relieve back pain and to encourage correct posture, allowing free movement of the arms and legs.

5,702,287

SANDER WITH ORBITING PLATEN AND ABRASIVE

Donald E. Haney, 11376 Ramsey Rd., Gold Hill, Oreg. 97525

Continuation of Ser. No. 260,360, Jun. 15, 1994, Pat. No. 5,443,414, which is a continuation of Ser. No. 6,379, Jan. 19, 1993, Pat. No. 5,321,913, which is a continuation of Ser. No. 787,897, Nov. 5, 1991, Pat. No. 5,181,342, which is a division of Ser. No. 568,902, Aug. 17, 1990, Pat. No. 5,081,794. This application Jun. 7, 1995, Ser. No. 477,069

Int. Cl.^{6} B24B *7/06;7/0?*

U.S. Cl. 451—28 **13 Claims**

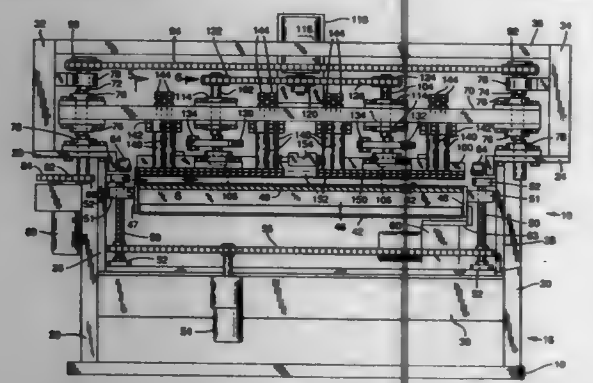

1. A method of sanding a generally planar surface of an article of wood, the method comprising:

providing a sanding machine including a conveyor having a feed direction, and an elongate platen structure carrying a sheet of sandpaper, the platen structure being disposed in a spaced-apart relationship with the conveyor to extend substantially across the conveyor generally crosswise to the feed direction;

placing the article on the conveyor;

transporting the article on the conveyor continuously in the feed direction past the platen structure while contacting the sandpaper with the generally planar surface to be sanded;

translating the platen structure in a first circular translational orbital path of a predetermined diameter at a first frequency of at least three thousand cycles per minute in a plane parallel to the planar surface of the article as the article is transported past; and

during the step of translating, imparting a cyclic second translational motion to the platen structure at a second frequency lower than the first frequency, the cyclic second motion being in the same plane as the first circular translational orbital path and driving the platen structure reciprocally in a direction transverse to the feed direction to prevent the formation of extended linear series of swirls on the generally planar surface of the article in a direction parallel to the feed direction by motion of the platen structure in the first circular translational orbital path over the article as the article is transported past the platen structure by the conveyor, where the cyclic second translational motion has a cyclic displacement with a range of displacement greater than the magnitude of the predetermined diameter of the first circular translational orbital path.

5,702,288

METHOD OF REMOVING EXCESS OVERLAY COATING FROM WITHIN COOLING HOLES OF ALUMINIDE COATED GAS TURBINE ENGINE COMPONENTS

William R. Liebke, Vernon; David R. Dawson, East Hartford; Mark A. Fredette, Windsor, and Mark B. Goodstein, Windsor Locks, all of Conn., assignors to United Technologies Corporation, Hartford, Conn.

Filed Aug. 30, 1995, Ser. No. 521,199

Int. Cl.^{6} B24B *1/00*

U.S. Cl. 451—36 **3 Claims**

1. A gas turbine engine component repaired by providing a gas turbine engine component having an internal surface, an outer surface and a root end, the component also having at least one

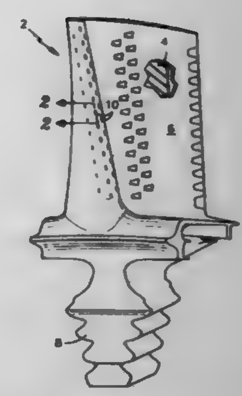

cooling hole extending from the internal surface to the outer surface, wherein the internal surface of the component is coated with an aluminide coating, the component further including a MCrAlY overlay coating on the outer surface and inside a portion of the cooling hole; and

forcing an abrasive slurry of semi-solid plastic flowable material comprising abrasive grits into the gas turbine engine component from the outer surface of the component to the internal surface of the component, through the cooling hole, wherein the slurry flows through the cooling hole and removes at least a portion of the overlay coating located inside the cooling hole without adversely affecting the aluminide coating on the internal surface of the component such that airflow through the component is within +/−12.5 percent of a target nominal airflow level, the slurry subsequently, exiting the repaired component through the root end.

5,702,289

ANTI-GRAVITY BLAST CLEANING

Jack M. Champaigne, South Bend, Ind., assignor to Electronics, Incorporated, Mishawaka, Ind.

Continuation-in-part of Ser. No. 309,932, Sep. 20, 1994, abandoned. This application Mar. 28, 1996, Ser. No. 623,609

Int. Cl.^{6} B24B *1/00*

U.S. Cl. 451—38 **13 Claims**

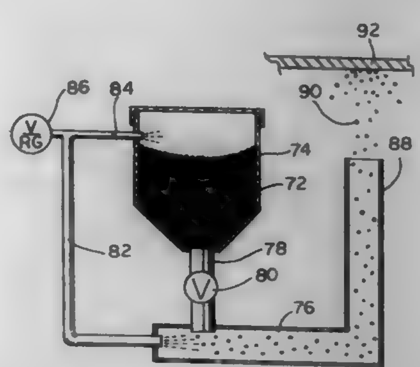

1. Shot peening method comprising the steps of conveying media into a transport hose at a predetermined mass flow rate, supplying gas under pressure to said hose through an inlet opening for accelerating said media to a conveyance velocity sufficient to convey the media through the hose, aiming said hose at a target workpiece, and discharging said media from a terminal end of said hose toward the target workpiece, orienting said terminal end of the transport hose upwardly to discharge said media upwardly against the force of gravity to form a fountain of media rising toward an apex in which the velocity of said media is a maximum as it is discharged from the terminal end of the hose and decreases until the velocity of the media is zero at the apex, and positioning said workpiece in said fountain at a point where the velocity of the media is no greater than the conveyance velocity.

5,702,290

BLOCK FOR POLISHING A WAFER DURING MENUFACTURE OF INTEGRATED CIRCUITS

Michael A. Leach, 345 Sheridan #204, Palo Alto, Calif. 94306

Division of Ser. No. 287,639, Aug. 8, 1994, Pat. No. 5,607,341. This application Apr. 8, 1996, Ser. No. 631,289

Int. Cl.^{6} B24B *1/00;7/19;7/30*

U.S. Cl. 451—41 **17 Claims**

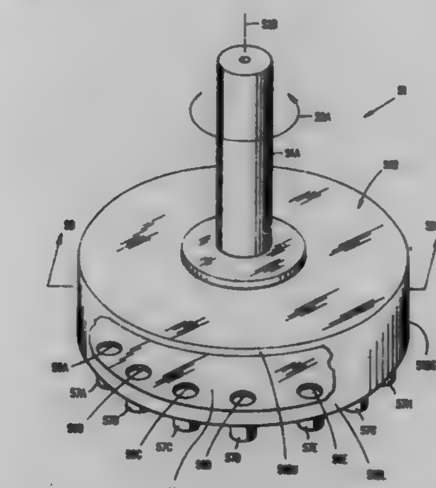

1. A block for removing a portion of a wafer using relative motion between said block and said wafer, said wafer having a plurality of photolithographic images, each of said photolithographic images comprising a plurality of protrusions, and said block has an eroding surface for eroding said portion of said wafer, wherein:

said eroding surface has a modulus of elasticity between approximately 10 million psi and approximately 500,000 psi at each point of said eroding surface, and

said eroding surface has an area between a maximum area and a minimum area, said minimum area being larger than an area of said photolithographic image and said maximum area being the largest possible area for said eroding surface to remain in contact with all protrusions of said wafer covered by said eroding surface prior to said relative motion.

5,702,291

WAFER POLISHING METHOD AND WAFER POLISHING APPARATUS

Akira Isobe, Tokyo, Japan, assignor to NEC Corporation, Tokyo, Japan

Filed Oct. 21, 1996, Ser. No. 734,554

Claims priority, application Japan, Oct. 19, 1995, 7-294946

Int. Cl.^{6} B24B *1/00*

U.S. Cl. 451—41 **6 Claims**

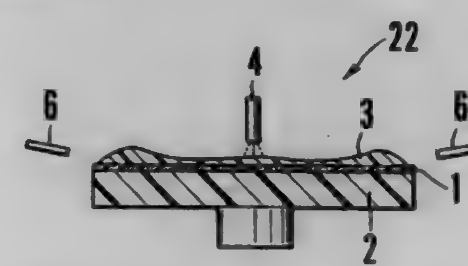

1. A polishing method of polishing a surface of the wafer by pressing a wafer, which is rotating in the same direction as a polishing table, against said polishing table while continuously flowing a polishing agent onto said polishing table, comprising suppressing run-off of said polishing agent by continuously blowing air from an outside of said polishing table toward said polishing table.

5,702,292

APPARATUS AND METHOD FOR LOADING AND UNLOADING SUBSTRATES TO A CHEMICAL-MECHANICAL PLANARIZATION MACHINE

Thad Brunelli, Boise; Gina Garrison, Meridian, and Wade Van Buren, Boise, all of Id., assignors to Micron Technology, Inc., Boise, Id.

Filed Oct. 31, 1996, Ser. No. 741,818

Int. Cl.^{6} B24B *1/00:7/19;7/30*

U.S. Cl. 451—41 **18 Claims**

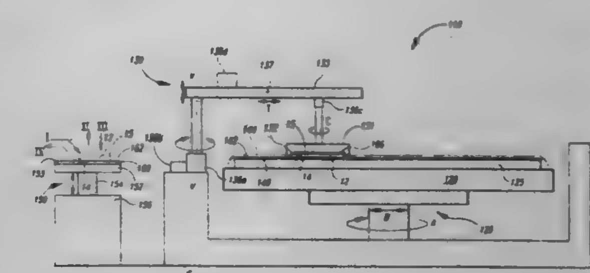

1. A planarizing machine for removing material from a substrate having a backside and a front face, comprising:

a platen mounted to a support structure;

a polishing pad positioned on the platen, the polishing pad having a polishing surface facing away from the platen;

a substrate carrier assembly having a chuck with mounting cavity, the backside of the substrate being removably attachable to the chuck in the mounting cavity, and the chuck being movable to position the substrate over the polishing pad and engage the front face of the substrate with the polishing surface of the polishing pad, wherein at least one of the platen and the chuck moves with respect to the other to impart relative motion between the substrate and the polishing pad;

a substrate loading/unloading pedestal positioned proximate to the substrate carrier assembly and having an upwardly facing mounting surface; and

a particle barrier film positioned on at least one of the substrate pedestal and the mounting cavity, the barrier film having a substantially non-porous top surface from which residual particles may be readily removed by a wash fluid.

5,702,293

HOLDING FIXTURE FOR METALLOGRAPHIC MOUNT POLISHING

Clyde H. Barth, Ballston Lake, and Charles E. Cramer, Schenectady, both of N.Y., assignors to The United States of America as represented by the United States Department of Energy, Washington, D.C.

Filed Oct. 30, 1996, Ser. No. 740,513

Int. Cl.^{6} B24B *41/06*

U.S. Cl. 451—364 **6 Claims**

1. A fixture for holding a specimen for polishing comprising:

(a) an arm;

(b) a body attached to an end of said arm, said body having a first opening of sufficient dimensions to allow insertion of a specimen for polishing therein and to hold said specimen stable and in place, a second opening axially parallel to said first opening; and

(c) a pressure means applying pressure against said specimen to hold said specimen in contact with a polishing surface, said

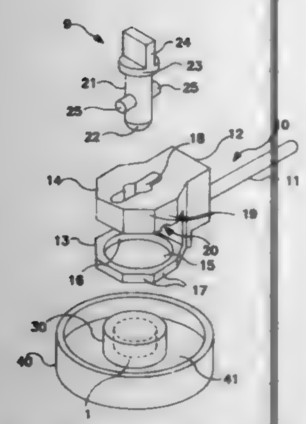

pressure means capable of being lockingly engaged within said second opening.

5,702,294
GRINDING BIT HAVING A NOVEL GRINDING GRIP

Lawrence C. Baltazar, Schenectady, and John O. Naumann, Watervliet, both of N.Y., assignors to Constant Velocity Systems, Inc., Ballston Spa, N.Y.

Continuation-in-part of Ser. No. 971,328, Nov. 4, 1992, Pat. No. 5,363,601, and Ser. No. 283,217, Jul. 27, 1994, Pat. No. 5,447,467, which is a continuation-in-part of Ser. No. 971,402, Sep. 4, 1992, Pat. No. 5,359,814, which is a continuation-in-part of Ser. No. 658,178, Feb. 20, 1991, Pat. No. 5,197,228, which is a continuation-in-part of Ser. No. 367,890, Jun. 19, 1989, abandoned. This application Sep. 1, 1995, Ser. No. 522,566

Int. Cl.⁶ B23F *21/03;* **B24B** *33/02*

U.S. Cl. 451—541 **11 Claims**

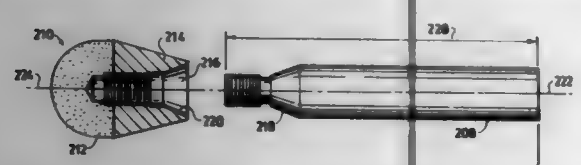

1. A grinding bit for regrinding a component of a constant velocity universal joint, wherein said grinding bit has a length of from about 2.0 to about 4.75 inches and is comprised of a grinding tip, an arbor, and means for removably attaching said grinding tip to said arbor, and wherein:

(a) said arbor has a length of from about 2.0 to about 4.3 inches, said grinding tip has a length of from about 0.7 to about 1.9 inches, and the length of said arbor exceeds the length of said grinding tip by at least about 1.0 inch;

(b) said grinding tip has a maximum cross-sectional dimension of from about 0.2 to about 1.3 inches, said arbor has a maximum cross-sectional dimension of from about 0.2 to about 0.8 inches, and the maximum cross-sectional dimension of said grinding tip exceeds the maximum cross-sectional dimension of said arbor by at least about 0.1 inches;

(c) said grinding tip is comprised of a lead portion with a substantially arcuate shape;

(d) said grinding tip is comprised of a substrate coated with a first abrasive material, wherein:

1. at least 95 weight percent of said grinding tip is comprised of a second material which has a tensile strength of at least 60,000 pounds per square inch,
2. said abrasive material has a hardness of at least about 9 Mohs,
3. said coating of said first abrasive material has a thickness of less than about 0.02 inches; and

(e) said arbor is comprised of at least about 95 weight percent of a third material with a Young's modulus of at least about 31,000,000 pounds per square inch and a coefficient of thermal expansion of from about 2.5 to about 3.9×10^{-6} inches/inch-degree Fahrenheit, wherein the coefficient of thermal expansion of said third material is from about 0.8 to about 1.8 times as great as the coefficient of thermal expansion of said second material.

5,702,295
DEVICE FOR POSITIONING FISH

Dieter Ketels, Kühsen, Germany, assignor to Nordischer Maschinenbau Rud. Baader Gmbh & Co KG, Lubeck, Germany

Filed Jun. 18, 1996, Ser. No. 665,412
Claims priority, application Germany, Jun. 20, 1995, 195 22 238.5

Int. Cl.⁶ A22C *25/08*

U.S. Cl. 452—180 **5 Claims**

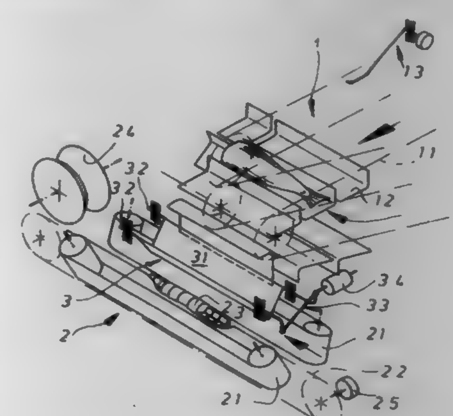

1. An apparatus for automatically positioning decapitated fish and for the periodic transfer of said fish to a fish processing machine, in which the fish are processed in an upright position with the decapitation face leading, the apparatus comprising first conveying means with which the fish are advanced with their decapitation faces in alignment, second conveying means, arranged below said first conveying means for receiving fish delivered by said first conveying means and having an endless support conveyor with support elements arranged in spaced relationship thereon, and means for holding down fish engaged by said support conveyor, wherein

a) the apparatus includes means associated with said first conveying means for determining at least one fish measurement value;

b) said apparatus further comprises fish holding means arranged between said first conveying means and said second conveying means and directly above the latter for temporarily holding fish released from said first conveying means; and

c) said holding means is associated with actuation means, which are arranged and controlled to activate said holding means so as to release fish in accordance with said determined fish measurement value.

5,702,296
PORTABLE VENTILATION SYSTEM

Lars Grano, Mora, Sweden, assignor to Grano Maleri & Dekor AB, Mora, Sweden

Filed Oct. 30, 1996, Ser. No. 739,195
Claims priority, application Sweden, Oct. 31, 1995, 9503840

Int. Cl.⁶ F24F *7/013*

U.S. Cl. 454—200 **5 Claims**

1. A portable ventilation system, which comprises a suction fan (11) for sucking-in fresh air from the outdoor atmosphere and blowing said fresh air into a room, an extraction fan (12) for extracting foul air from said room and causing the foul air to be blown into the outdoor atmosphere; and a flexible air conduit (13)

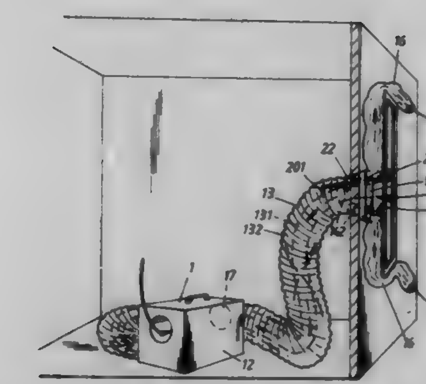

intended to be mounted in a gap defined by a partially opened window and which has two mutually separate passageways (131, 132) arranged for the transfer of heat between said passageways through the medium of a wall of one passageway (132), wherein one end of one passageway (131) being connectable to the input side of the fan (11) through which fresh air is sucked-in and the other end of the passageway (132) is connectable to the output side of the foul-air extraction fan (12), and wherein the remaining ends of the passageways (131, 132) are disposed for the free flow of air therethrough from/to the outdoor atmosphere outside the only partially open window.

5,702,297
SLOT VENTILATOR

John Neil Anderson, Suffolk, and Arthur Stoney, Essex, both of England, assignors to Titon Hardware Limited, Essex, England

PCT No. PCT/GB94/02130, § 371 Date Jun. 24, 1996, § 102(e) Date Jun. 24, 1996, PCT Pub. No. WO95/09333, PCT Pub. Date Apr. 6, 1995
PCT Filed Sep. 30, 1994, Ser. No. 619,482
Claims priority, application United Kingdom, Sep. 30, 1993, 9320194

Int. Cl.⁶ F24F *13/18*

U.S. Cl. 454—213 **20 Claims**

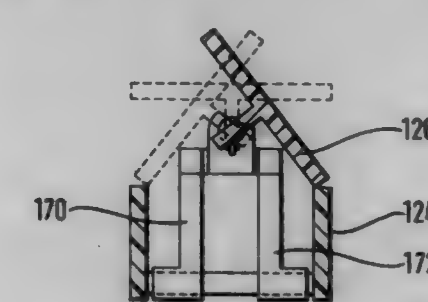

1. A slot ventilator (100, 500) comprising a slotted backing member (24, 124, 424, 524), an elongate facing strip (46, 126, 426, 526, 626) and a linking mechanism connecting the backing member and facing strip with one another, the linkage mechanism being arranged to permit generally translational forward and backward movement of the facing strip, in which the linkage mechanism restrains motion of each end of the facing strip during forward motion of the facing strip to motion along a predetermined course with the position of each end during such motion being dependent upon the position of the other end, between a closed position in which the slot is closed and an open position in which the facing strip is spaced in front of the backing member, the linkage mechanism including a hinge allowing the facing strip to rotate about a longitudinal axis to vary the angular orientation thereof.

5,702,298
UNSHEATHED CABLE ACTIVATED DAMPER CONTROL SYSTEM

Stephen J. Conkling, P.O. Box 1369, Merideth, N.H. 03253-1369

Filed Sep. 29, 1995, Ser. No. 536,549
Int. Cl.⁶ F24F *13/12*

U.S. Cl. 454—322 **17 Claims**

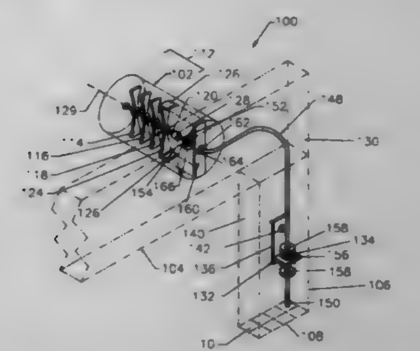

1. An unsheathed cable activated damper control system for an air processing system adjusted by a torque inducing tool, the air processing system having a damper controlled by a damper regulator, the unsheathed cable activated damper control system comprising:

a first cable bracket having a first cable bracket passage therethrough;

means for mounting said first cable bracket with respect to the air processing system;

an unsheathed flexible torque transmitting cable having a first cable end and a second cable end,

said unsheathed flexible torque transmitting cable passing through said first cable bracket passage;

means for coupling said first cable end to the torque inducing tool;

means for limiting axial motion of said unsheathed flexible torque transmitting cable with respect to said first cable bracket; and

means for grippably engaging said second cable end engaged with the damper regulator of the air processing system.

5,702,299
METHOD AND INSTALLATION FOR REMOVING SMOKE FROM A MONITORED SPACE

Göran Sundholm, Ilmari Kiannon kuja 3, FIN-04310 Tuusula, Finland

PCT No. PCT/FI94/00173, § 371 Date Nov. 3, 1995, § 102(e) Date Nov. 3, 1995, PCT Pub. No. WO94/26356, PCT Pub. Date Nov. 24, 1994
PCT Filed May 6, 1994, Ser. No. 535,294
Claims priority, application Finland, May 11, 1993, 932135

Int. Cl.⁶ F24F *6/14*

U.S. Cl. 454—342 **7 Claims**

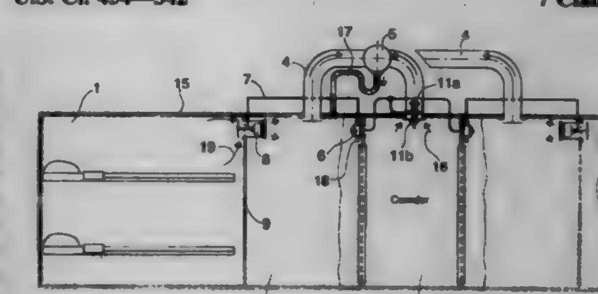

2. In a space (1) and an installation for fighting a fire in said space, and further including a shower room (3), a through-wall opening into said shower room from said space and at least one

ventilation or air-conditioning duct (5) out-going from said shower room, the improvement of said installation comprising:

at least one spray head (11*a*) for spraying liquid in the form of small droplets, like a fog, into said ventilation or air-conditioning duct (5) to produce a suction, whereby to draw smoke into said ventilation or air-conditioning duct from said space; and

a sprinkler control device (6) in said space and arranged to, upon release, to activate a further spray head (8) in said opening to produce a suction from said space past said further spray head, whereby to draw smoke into said shower room for removal by said ventilation or air-conditioning duct.

5,702,300
COMBINE ROCK DOOR OVER CENTER CLOSURE APPARATUS
Ronald E. Wilson, Lee's Summit, Mo., assignor to AGCO Corporation, Independence, Mo.
Filed Apr. 18, 1996, Ser. No. 634,450
Int. Cl.⁶ A01D *75/18*
U.S. Cl. 460—106 **15 Claims**

1. In a combine harvester equipped with a rock door, a rock door pivot which pivotably attaches the rock door to said combine harvester such that it is movable between an upper, closed position and a lower, open position, said rock door including a spring latch positioned on said rock door and a spring latch pin positioned on a latch pin arm of said rock door, said latch pin arm being pivotable between a latched position in which the pin engages said spring latch and latches said rock door in said closed position, and an unlatched position which allows said rock door to pivot to said open position, said latch pin being forced from said latched to said unlatched position by a rock striking said rock door, the improvement comprising a rock door over center closure apparatus for facilitating the closing and latching of said rock door by an operator, said apparatus comprising:

a. a first lever arm connected to rotate about said rock door pivot;

b. a linkage arm connected near a first end to said first lever arm; and

c. an over center assembly connected near a second end of said linkage arm, said over center assembly being movable between a free rotating position and an over center position, said over center assembly, when in said over center position, causing said first lever arm to hold said rock door in said closed position such that said rock door latch pin arm can be conveniently pivoted to said latched position.

5,702,301
TWO STAGE SHAKER
David Jeffrey Meester, Fresno, Calif., assignor to FMC Corporation, Chicago, Ill.
Continuation of Ser. No. 444,639, May 19, 1995, Pat. No. 5,573,459. This application Aug. 5, 1996, Ser. No. 692,210
Int. Cl.⁶ A01D *46/00*
U.S. Cl. 460—144 **17 Claims**

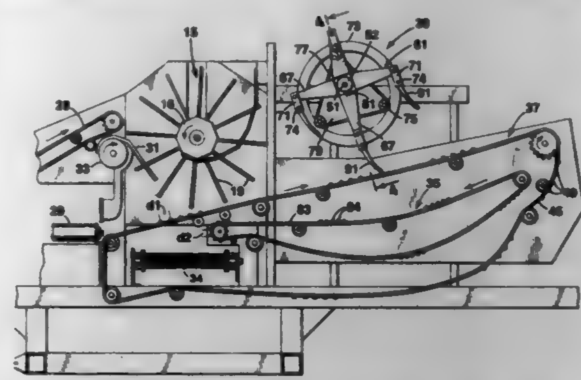

11. A harvester for harvesting and separating fruits from vines, comprising:

a main frame;

a shaker brush having a plurality of tines, and mounted on the main frame for rotation about an axis;

means for feeding fruits and vines to a feed point adjacent to the shaker brush, wherein said means for feeding is mounted to the main frame adjacent to the shaker brush;

a plurality of feeder rods mounted to the main frame, extending from locations under the feed point to locations within the shaker brush; and

means for conveying fruits and vines from the feeder rods to a position within a bottom part of the shaker brush, wherein the means for conveying, comprises:

a first endless belt extending under the shaker brush;

a second endless belt extending under the shaker brush; and

a plurality of rods extending from the first endless belt to the second endless belt, wherein the plurality of tines of the shaker brush do not reach the first endless belt, the second endless belt and the plurality of rods.

5,702,302
GAMBLING MACHINE WITH DISPLAY MEANS FOR THE DISPLAY OF SYMBOLS
Michael Gauselmann, Espelkamp, Germany, assignor to Atronic Casino Technology Distribution GmbH, Lübbecke, Germany
Filed Sep. 21, 1995, Ser. No. 531,500
Claims priority, application Germany, Sep. 23, 1994, 44 34 128.8
Int. Cl.⁶ A63F *9/24*
U.S. Cl. 463—20 **8 Claims**

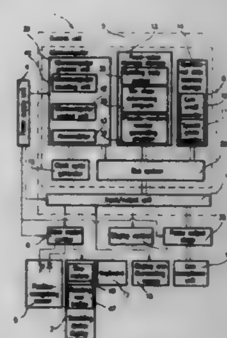

1. A method of operating a gambling machine comprising the steps:

initiating a game;

determining a certain game stop position of a displayed rotating reel;

determining a pseudo-random number with a pseudo-random number generating means for the certain game stop position;

comparing the pseudo-random number with a predetermined number within a range of pseudo-random numbers generatable for the possible game stop position;

increasing the certain game stop position by a step where the pseudo-random number does not numerically coincide with the predetermined number and determining another pseudo-random number and repeating the above steps following such determination;

displaying the symbol associated with the game stop position when the pseudo-random number numerically coincides with the predetermined number and paying out a winning amount when coordinated to the symbol displayed.

5,702,303
GAME MACHINE HAVING A PLAYING DISPLAY SCREEN
Takatoshi Takemoto, and Masayuki Tsurumi, both of Tokyo, Japan, assignors to Kabushiki Kaisha Ace Denken, Tokyo, Japan
PCT No. PCT/JP93/00296, § 371 Date Sep. 12, 1994, § 102(e) Date Sep. 12, 1994, PCT Pub. No. WO93/17766, PCT Pub. Date Sep. 16, 1993
PCT Filed Mar. 10, 1993, Ser. No. 295,910
Claims priority, application Japan, Mar. 10, 1992, 4-051873; Mar. 10, 1992, 4-051874
Int. Cl.⁶ A63F *5/04;7/02*
U.S. Cl. 463—27 **22 Claims**

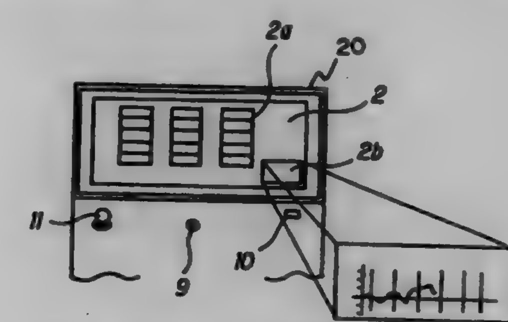

1. A game machine having a display having a game display screen and control means for paying out game play media for a winning game if a given condition is satisfied after a game is started after game play media are input, wherein the improvement comprises:

an input counter for cumulatively counting and outputting a value corresponding to the number of game play media input into the machine;

a payout counter for cumulatively counting and outputting a value corresponding to the number of game play media paid out by said control means;

computing means for finding a difference between the value output by said input counter and the value output by said payout counter and outputting the difference as a profit/loss count of game play media;

storage means for sequentially storing the profit/loss count output from said computing means together with the time at which said profit/loss count is output by said computing means;

detecting means for detecting a game start and a game end,

said control means having a processing section for, upon determination of the game start, displaying information representing change of the profit/loss count since the start of the current game, stored in said storage means, in a part of said game display screen, and upon determination of the game end, for clearing the display.

5,702,304
METHOD AND APPARATUS FOR OPERATING NETWORKED GAMING DEVICES
John F. Acres; Alec Ginsburg, and David Wiebenson, all of Corvallis, Oreg., assignors to Acres Gaming, Inc., Corvallis, Oreg.
Division of Ser. No. 322,172, Oct. 12, 1994, Pat. No. 5,655,961. This application Jun. 6, 1995, Ser. No. 467,072
Int. Cl.⁶ A63F *9/00*
U.S. Cl. 463—29 **31 Claims**

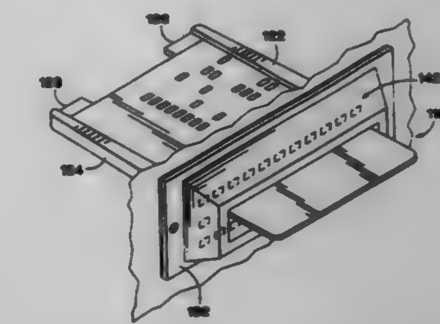

1. A method of providing feedback to a user inserting a user identification card having a unique user identification code encoded thereon into a gaming device, the method comprising:

receiving the card into a card reader opening defined by a translucent bezel having a front side and a rear side;

sensing the code on the card;

determining whether the sensed code is a valid identification code; and

lighting the bezel from the rear side about the periphery thereof with a first lighting mode if the sensed code is a valid identification code and with a second lighting mode if the sensed code is not a valid identification code.

5,702,305
ELECTRONIC GAME SYSTEM
Michael P. Norman, Chandler, and Karen E. Jachimowicz, Laveen, both of Ariz., assignors to Motorola, Schaumburg, Ill.
Filed Feb. 15, 1996, Ser. No. 601,925
Int. Cl.⁶ A63F *9/24*
U.S. Cl. 463—42 **31 Claims**

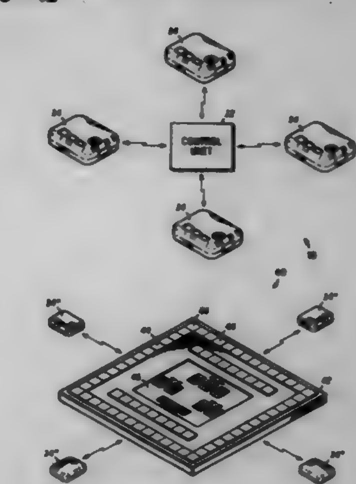

1. An electronic game system comprised of:

at least one control unit for receiving, compiling, monitoring, processing, and transmitting game data and information; and

a plurality of personal display units in omni-directional communication with the at least one control unit, each of the plurality of personal display units including a virtual image display

area for displaying as a virtual image, game data and information received from the at least one control unit.

5,702,306
PROTECTIVE DEVICE FOR TELESCOPIC SHAFTS
Wolfgang Adamek, Lohmar; Horst Kretschmer, Köln; Hubert Grosse Entrup, Lohmar; Clemens Nienhaus, Neunkirchen-Seelscheid; Paul Herchenbach, Ruppichteroth; Andreas Sarfert, Bonn; Klaus Kämpf, Lohmar, and Wilhelm Schott, Köln, all of Germany, assignors to GKN Walterscheid GmbH, Lohmar, Germany
Filed Nov. 4, 1996, Ser. No. 743,322
Claims priority, application Germany, Nov. 4, 1995, 195 41 185.2
Int. Cl.⁶ F16C *1/26*
U.S. Cl. 464—172 **5 Claims**

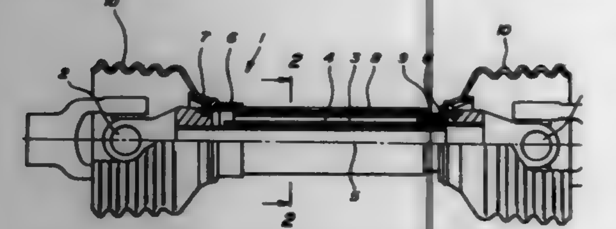

1. A protective device for telescopic, rotating shafts comprising:
an outer protective tube and an inner protective tube which are axially inserted into, and overlap, one another, said tubes are adjustable relative to one another along a longitudinal axis and are made of plastic, said outer protective tube on an inner face including at least three grooves which are open towards the longitudinal axis and which are delimited by pairs of ribs on the outer protective tube, said pairs of ribs extend parallel to the longitudinal axis and project from the inner face, said pairs of ribs are arranged so as to be distributed on a circumference of the inner face around the longitudinal axis, the inner face of said outer protective tube between the pairs of ribs further including at least one guiding web formed on and projecting from the inner face towards the longitudinal axis and said inner protective tube including guiding ribs formed on and projecting radially outwardly from the outer face, said guiding ribs of said inner protective tube corresponding in number to the pairs of ribs of the outer protective tube, said guiding ribs of said inner protective tube are arranged to project between said ribs of respective said pair of ribs, said guiding ribs of said inner protective tube engage with play, in the circumferential direction, the region between said pairs of ribs.

5,702,307
PIVOTAL, SPHERICALLY SHAPED, MOTION SIMULATOR-WITH SHIFTING MEANS FOR CONTROLLING ITS' CENTER OF GRAVITY
Kristen G. Moran, 1957 E. Andreas Rd., Palm Springs, Calif. 92262
Filed Apr. 11, 1996, Ser. No. 625,842
Int. Cl.⁶ A63G *1/12*
U.S. Cl. 472—47 **14 Claims**

1. A motion simulator in the form of a motorized skeletal sphere for physically rotating, in a controlled and deliberate manner, an occupant, 360° in a plurality of directions, in conjunction with the use of video and graphic software programs, comprising:
(a) two orbital tracks, configured perpindicular to each other to form said skeletal sphere and serve as predetermined paths,
(b) two cyclic motorized ballasts, one for each said orbital track with attachment means to and for each said track, as a shifting means for controlling the center of gravity from within said skeletal sphere,

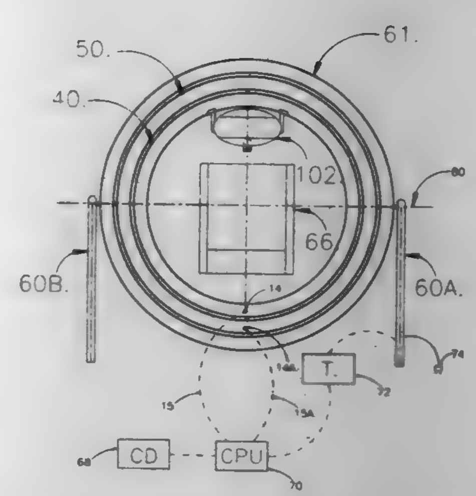

(c) a pivotal platform as a support means for allowing said skeletal sphere to rotate freely, in a plurality of directions,
(d) a variable counter-weight as adjusting means for off-setting occupants' weight and said motorized ballasts' weight from within said skeletal sphere.

5,702,308
MINIATURE BOWLING ALLEY GAME
Delbert S. Alexander, Jr., 1018½ Dodge Ave., Evanston, Ill. 60202
Filed Apr. 22, 1996, Ser. No. 635,737
Int. Cl.⁶ A63D *3/00*
U.S. Cl. 473—70 **11 Claims**

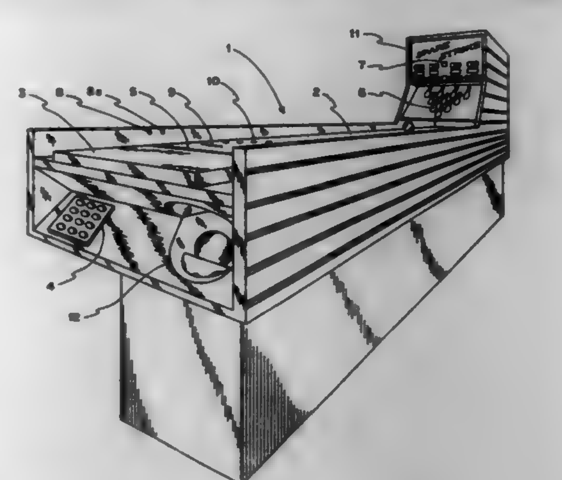

1. A miniature bowling alley game comprising:
an elongated cabinet having a front end and back end and extending side walls;
said elongated cabinet including an alley disposed within said cabinet and positioned between said front and rear ends;
said alley being defined by a first recessed gutter running along the side of said alley, and a second recessed gutter running along the opposite side of said alley, said alley further defined by the extending side walls of said cabinet, said extending side walls extending the length of said alley and being raised above said alley and said first and second recessed gutters;
means for detecting fouls affixed to said cabinet walls having the ability to send an activation signal indicating that a foul has occurred;
said rear end including means for display comprising means for displaying a simulated bowling pin arrangement having the ability to display an individual pin or a spare combination, means for displaying information on the number of bowlers,

game score and frame, and positioned above said means for displaying a simulated bowling pin arrangement;
means for sensing the position of a ball as it rolls down the alley and sending an activation signal;
said front end including means for selection having the ability to control the number of players, game mode, and practice spare combination, and further including a ball return area;
said means for displaying a simulated ten pin arrangement comprising a masked translucent panel, said masked translucent panel being angled and having a ten pin arrangement adapted to display each of said ten pins individually or in combination depicting a spare combination; and
a means for processing positioned behind said masked translucent panel and attached to said rear end, said means for processing having means for determining a first and a second ball spare combination, means for determining the speed of a ball, means for determining a sound effect, and the ability to receive said activation signal from said means for detecting fouls and said activation signal from said means for sensing.

5,702,309
GOLF TRAINING DEVICE
Alan Lee, 14F-2, No. 90, Joukung Street, Taipei, Taiwan
Filed Mar. 4, 1997, Ser. No. 807,940
Claims priority, application Taiwan, Sep. 11, 1996, 85214042
Int. Cl.⁶ A63B *69/36*
U.S. Cl. 473—235 **5 Claims**

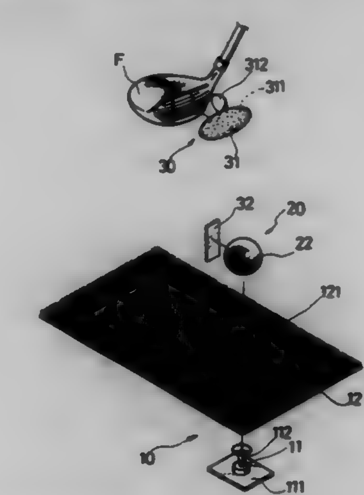

1. A golf training device comprising:
a ball support comprising a ground pad of a sufficient area, made of a resilient material and having a hole formed therein and a ball holder made of a resilient and elastically deformable material, comprising a flat base having a surface area larger than the hole of the ground pad and a tee mounted on the flat base and extending therefrom through the hole of the ground pad to have the ground pad resting on the flat base to retain the ball holder in position, the tee comprising a top end having a concave top surface;
a ball adapted to be placed on the concave surface of the tee to be hit, comprising a spherical core made of a light-weighted material and having a size and configuration similar to a golf ball with a plurality of dimples formed on a surface thereof and a cover layer made of a stretchable and elastically deformable material to completely enclose the core, the dimples formed on the surface of the core providing a relative slippery interface between the cover layer and the core when the ball is hit; and
ball grasping means comprising a releasable fastening device which comprises two mated portions of which a first portion is adapted to be fixed on a head of a golf club and a second portion is fixed on the cover layer of the ball so that when the club is swung to hit the ball, the first and second portions of the releasable fastening device engage and stick to each other and thus hold the ball on the head of the golf club.

5,702,310
GOLF CLUB WITH ADJUSTABLE MALE HOSEL AND FERRULE
Thomas A. Wozny, Mt. Prospect, Ill., assignor to Wilson Sporting Goods Co., Chicago, Ill.
Filed Sep. 11, 1996, Ser. No. 712,360
Int. Cl.⁶ A63B *53/02*
U.S. Cl. 473—308 **7 Claims**

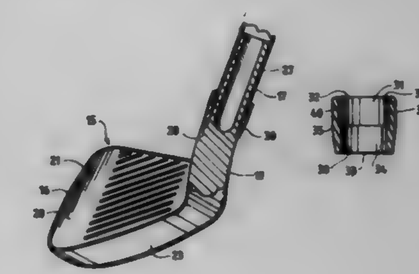

1. A golf club comprising:
a clubhead having a striking face, a toe portion, a heel portion, and a male hosel extending from the heel portion, the hosel including an attaching portion and an annular shoulder which extends outwardly from the attaching portion,
a tubular ferrule having first and second ends and an internal bore extending through the ferrule and provided by an internal surface, the internal surface having:
a first portion adjacent the first end providing a first portion of the bore which is sized to fit over the attaching portion of the hosel;
a second portion adjacent the second end of the ferrule providing a second portion of the bore which is larger than the first portion of the bore, the second portion of the internal surface being spaced outwardly from the attaching portion of the hosel, and
an abutment portion between the first and second portions,
a tubular shaft which is positioned between the attaching portion of the hosel and the second portion of the internal surface of the ferrule and which includes a lower end which abuts the abutment portion of the internal surface,
the ferrule being formed from material which is softer than the material of the hosel whereby the ferrule can deform when the loft or lie angle of the club is adjusted.

5,702,311
MULTI-PIECE SOLID GOLF BALL
Hiroshi Higuchi, and Hisashi Yamagishi, both of Chichibu, Japan, assignors to Bridgestone Sports Co., Ltd., Tokyo, Japan
Filed Apr. 25, 1996, Ser. No. 637,602
Claims priority, application Japan, May 12, 1995, 7-138552
Int. Cl.⁶ A63B *37/06;37/12*
U.S. Cl. 473—373 **14 Claims**

1. A multi-piece solid golf ball comprising; a solid core of a multilayer structure including innermost core and at least one intermediate layer enclosing the innermost core, and a cover enclosing the solid core,
said golf ball having a specific gravity of 1.0 to 1.1, a weight of 40.8 to 44.9 g and a distortion of A mm under a load of 100 kg,
said innermost core having a distortion of B mm under a load of 100 kg, wherein B/A ranges from 1.2 to 1.7, and

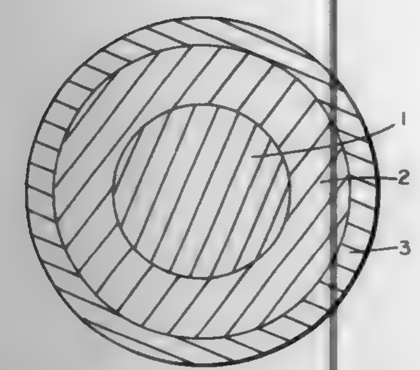

said cover having a shore D hardness of at least 50 and a greater hardness than the hardness of the innermost core.

5,702,312
SOLID GOLF BALL

Kuniyasu Horiuchi, Kobe; Seiichiro Endo, Shirakawa; Keiji Moriyama, Shirakawa, and Masatoshi Yokota, Shirakawa, all of Japan, assignors to Sumitomo Rubber Industries, Ltd., Hyogo-ken, Japan

Filed Sep. 13, 1996, Ser. No. 713,656

Claims priority, application Japan, Sep. 14, 1995, 7-236654

Int. Cl.^{6} A63B *37/06;37/12*

U.S. Cl. 473—377 4 Claims

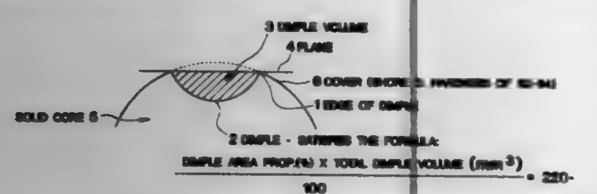

1. A solid golf ball comprising a solid core, a cover covering said core and dimples formed on the surface of the cover, wherein said cover has a Shore D hardness of 52 to 64 and said dimples satisfy the following equation:

(Dimple area proportion (%))×(Total dimple volume (mm^3))÷100=220 to 270,

wherein the dimple area proportion is within the range of 70 to 88% and the total dimple volume is within the range of 260 to 360 mm^3.

5,702,313
GAME RACKET WITH PRIMARY AND SECONDARY YOKES

Patrick G. Stennett, Springfield, Mass., assignor to Lisco, Inc., Tampa, Fla.

Filed Feb. 13, 1997, Ser. No. 799,286

Int. Cl.^{6} A63B *49/02*

U.S. Cl. 473—546 6 Claims

1. A game racquet comprising, in combination:
a handle end with a grip portion formed thereon, the handle end having a lower butt end and an upper extent;
a throat region having a lower extent coextensive with the upper extent of the handle end, and a upper extent which is wider than the lower extent;
a generally oval hitting region, the hitting region having a length, and a lower extent coextensive with the upper extent of the throat region;
an arcuate primary throat bridge forming the lower extent of the oval hitting region, the primary throat bridge having four oversized apertures formed therethrough, an oversize grom-

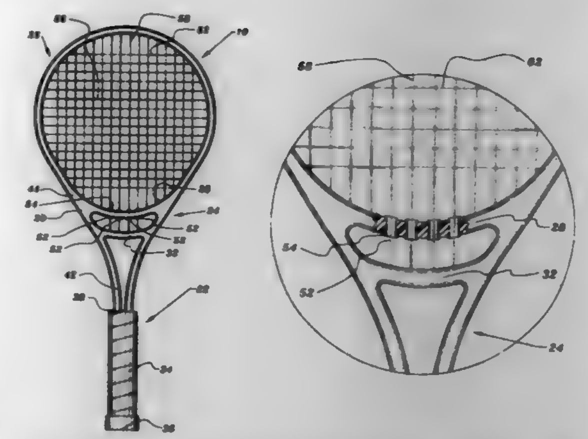

met positioned within each of the oversized apertures, each of the grommets being defined by an internal surface and a diameter;
an arcuate secondary throat bridge formed intermediate the primary throat bridge and the lower extent of the throat region;
a longitudinal string strung in longitudinal segments which extend the length of the hitting region, the longitudinal string having a diameter, four of the longitudinal segments extending through the grommets of the primary throat bridge, the grommets of the primary throat bridge having a diameter several times larger than the diameter of the longitudinal string such that each of the longitudinal segments are suspended from the internal surface of the corresponding grommet when the string is in an undisturbed state;
each of the four longitudinal segments being secured through the secondary throat bridge;
a lateral string strung in lateral segments, wherein the lateral and the longitudinal lengths are in equal tension.

5,702,314
DEVICE FOR DAMPING SPRING VIBRATIONS

Michael Schmid, Höchstadt/Aisch, Germany, assignor to Ina Wälzlager Schaeffler KG, Herzogenaurach, Germany

PCT No. PCT/EP95/01217, § 371 Date Dec. 11, 1996, § 102(e) Date Dec. 11, 1996, PCT Pub. No. WO96/03598, PCT Pub. Date Feb. 8, 1996

PCT Filed Apr. 1, 1995, Ser. No. 765,155

Claims priority, application Germany, Jul. 28, 1994, P 44 26 666.9

Int. Cl.^{6} F16D *3/12*

U.S. Cl. 474—94 7 Claims

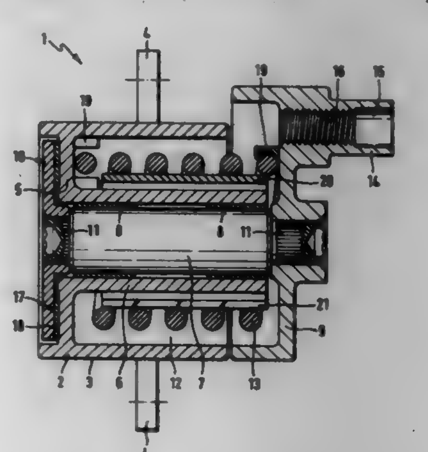

1. A tensioner for traction drives, comprising a base element and a pivoting element in the form of a tension roller support arranged partially concentric with each other; a torsion spring guided on a

bush for bracing the base element and the tension roller support against each other, said torsion spring causing a displacement of the tension roller support into an end position in which a tension roller tightens the tension drive, wherein the tension roller support is connected to a friction element for damping adjusting movements; and a tension bush (**20**) substantially corresponding in length to the tension spring (**13**) and comprising a longitudinal slot (**21**), said tension bush being inserted between the bush (**6**) and the torsion spring (**13**) so as to bear against an inner periphery of the torsion spring (**13**).

5,702,315
AUTOTENSIONER

Kouichi Sakai, Zama; Hayato Oumi, Chigasaki, and Hiroshi Suzuki, Yokohama, all of Japan, assignors to NSK, Ltd., Tokyo, Japan

Continuation of Ser. No. 574,691, Dec. 19, 1995, abandoned, which is a division of Ser. No. 284,985, Aug. 4, 1994, Pat. No. 5,518,459. This application Apr. 29, 1997, Ser. No. 848,676

Claims priority, application Japan, Aug. 4, 1993, 5-46416

Int. Cl.^{6} F16H *55/13*

U.S. Cl. 474—94 9 Claims

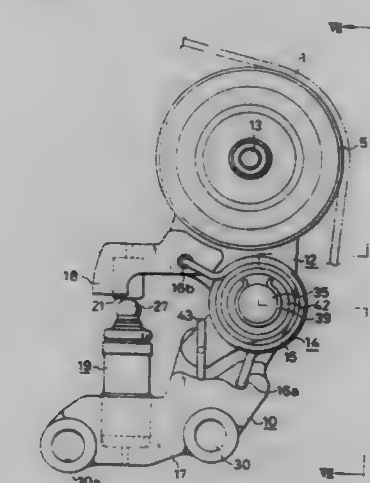

1. An autotensioner for use in applying a tension to a moving belt, comprising:
a bracket attached to an engine body at a first position,
a rocker member rockingly mounted to the bracket and having an arm,
a rocker bearing section for pivotally mounting the rocker member to the bracket, the rocker bearing section comprising a cylindrical section, formed on the bracket and having an inner peripheral surface,
a first pivot shaft having an outer peripheral surface and formed on the rocker member so as to be inserted into the cylindrical section, said first pivot shaft being formed on the rocker member at a second position displaced from said first position where the bracket is attached to the engine body,
a sliding bearing provided between the outer peripheral surface of the first pivot shaft and the inner peripheral surface of the cylindrical section,
a second pivot shaft provided in the rocker member,
a pulley rotatably mounted to the rocker member through the second pivot shaft, and
a damper device provided between the bracket and the rocker member.

5,702,316
MODULAR SPLIT SPROCKET ASSEMBLY

Daniel D. Cole, 2430 The Haul Over, John's Island, S.C. 29455-6103

Filed Nov. 21, 1995, Ser. No. 560,804

Int. Cl.^{6} F16H *55/12*

U.S. Cl. 474—96 3 Claims

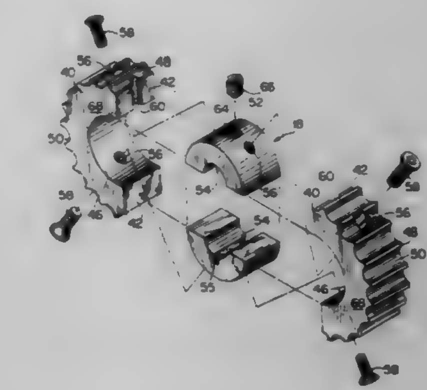

1. A split sprocket assembly mountable on a shaft comprising:
a pair of substantially semi-circular sprocket halves, each of said sprocket halves having surface faces joined at a split line between said sprocket halves and having a concentric bore, each of said sprocket halves further having a plurality of teeth provided about its periphery and a series of tooth pockets also formed about its periphery between each pair of adjacent teeth;
a hub disposed in said concentric bore, said hub having a throughhole disposed around said shaft;
said sprocket halves and said hub including two sets of diametrically opposite, aligned apertures, each of said aligned apertures extending radially inwardly from one of said tooth pockets on the periphery of said sprocket halves and into said hub; and
a fastener within each of said aligned apertures for joining said sprocket halves and said hub together to form a split sprocket assembly attachable and detachable from said shaft,
wherein said hub is formed with a passageway extending radially inwardly from the periphery of said hub and completely through said hub, and one of said sprocket halves and said hub includes a further set of aligned apertures extending radially inwardly from the periphery of said one of said sprocket halves and completely through said hub, said further set of aligned apertures being located opposite said passageway.

5,702,317
AUTOTENSIONER

Kazuki Kawashima; Sadaji Katogi, and Yoshikazu Hida, all of Iwata, Japan, assignors to NTN Corporation, Osaka, Japan

Filed Apr. 3, 1996, Ser. No. 627,095

Claims priority, application Japan, Apr. 13, 1995, 7-088327; Oct. 31, 1995, 7-283801

Int. Cl.^{6} F16H *7/08*

U.S. Cl. 474—110 7 Claims

1. An autotensioner comprising:
an eccentric ring;
a tension pulley rotatably mounted on said eccentric ring for supporting a belt, said tension pulley having an outer periphery and an axis;
a tension adjusting spring mounted on said eccentric ring for urging said eccentric ring in a first direction so as to pivot said eccentric ring; and
a hydraulic damper arranged in a side-by-side relation with said tension pulley along said axis of said tension pulley.

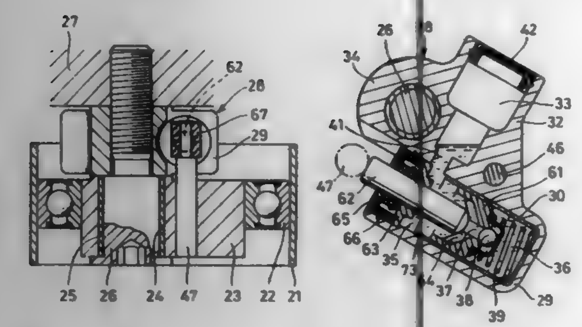

said hydraulic damper comprising a damper cylinder having a pressure chamber and a reservoir chamber, a pressure receiving member in engagement with said eccentric ring for damping rotary motion of said eccentric ring when tension in the belt increases, and a check valve provided between said pressure chamber and said reservoir chamber,

wherein said hydraulic damper is arranged within said outer periphery of said tension pulley.

5,702,318

CHAIN TENSIONING DEVICE

Hiroshi Hayafune, and Atsushi Kumakura, both of Iruma, Japan, assignors to Tsubakimoto Chain Co., Osaka, Japan

Filed Mar. 5, 1996, Ser. No. 611,005

Claims priority, application Japan, Mar. 7, 1995, 7-072524

Int. Cl.^{6} F16H *7/08*

U.S. Cl. 474—111 **1 Claim**

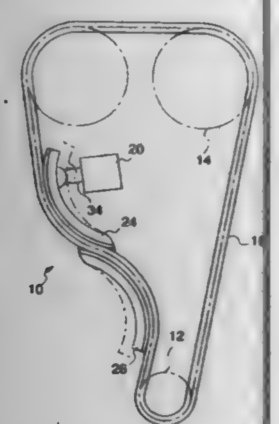

1. A chain tensioning device for use with an endless chain having an inner surface and an outer surface, comprising:

a first lever having a surface curved in a first direction so as to be engageable with said inner surface of said chain;

a second lever having a curved surface curving in a direction opposite to said first direction so as to be engageable with said outer surface of said chain;

a base having a pivot axis and being rotatable with respect thereto, wherein said first lever and said second lever being joined and fixed to each other at adjoining ends by said base; and

a tensioner attached to one end of one of said levers opposite to said adjoining ends for applying a rotational force to said levers for rotating said levers about said pivot axis of said base for tensioning said chain.

5,702,319

HYDROMECHANICAL SYSTEM FOR LIMITING DIFFERENTIAL SPEED BETWEEN DIFFERENTIALLY ROTATING MEMBERS

Ralph W. Baxter, Jr., Ft. Wayne, Ind., assignor to Dana Corporation, Toledo, Ohio

Filed Oct. 13, 1995, Ser. No. 543,173

Int. Cl.^{6} F16H *48/30*

U.S. Cl. 475—88 **20 Claims**

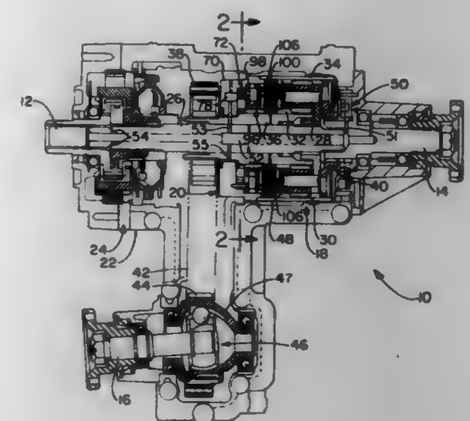

1. A hydromechanical system for limiting differentiation between a first rotating member and a second rotating member in a drivetrain subassembly, said hydromechanical system comprising:

a clutch assembly for selectively coupling said first rotating member to rotate with said second rotating member;

a hydraulically actuated piston assembly for applying force on said clutch assembly to actuate said clutch assembly in response to hydraulic pressure such that said first rotatable member is selectively coupled to rotate with said second rotatable member;

a clutch actuating pump, including a reservoir, for supplying hydraulic pressure to said piston assembly to actuate said piston assembly, wherein said clutch actuating pump communicates hydraulic fluid under pressure to said piston assembly in response to differential rotation between said first and second rotating members; and

a second pump in fluid communication with said reservoir of said clutch actuating pump for supplying hydraulic fluid to said reservoir of said clutch actuating pump.

5,702,320

PLANET GEAR CARRIER ARRANGEMENT WITH AXIAL SUPPORT

Zoltan Brassai; Bjoern Schneider, both of Cologne, and Vladimir Premiski, Zuelpich-Buervenich, all of Germany, assignors to Ford Global Technologies, Inc., Dearborn, Mich.

Filed Sep. 20, 1996, Ser. No. 717,060

Claims priority, application Germany, Sep. 20, 1995, 195 34 791.9

Int. Cl.^{6} F16H *57/08;1/28;3/44*

U.S. Cl. 475—159 **14 Claims**

1. A planet gear carrier arrangement for an automatic transmission, said carrier having axial support, comprising:

a planet gear hub member;

a plurality of planet gear pins carried by said hub member;

a plurality of planet gears rotatably carried by said pins;

an oil collecting ring carried by said hub member, said ring having formed at its inner circumference a truncated cone and said ring having a thrust surface provided on a side of said ring axially opposite said hub member, and

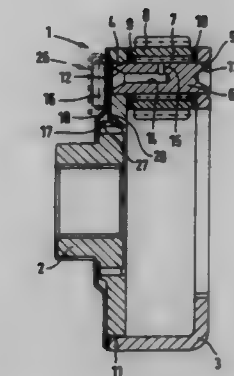

wherein said thrust surface comprises a race of a thrust bearing axially adjacent said hub member.

5,702,321

FULL-TIME TRANSFER CASE WITH SYNCHRONIZED RANGE SHIFT MECHANISM AND ON-DEMAND DIFFERENTIATION CONTROL

Richard A. Bakowski, Warners, and Richard E. Eastman, Central Square, both of N.Y., assignors to New Venture Gear, Inc., Troy, Mich.

Filed Jun. 25, 1996, Ser. No. 671,046

Int. Cl.^{6} F16H *48/02*

U.S. Cl. 475—199 **19 Claims**

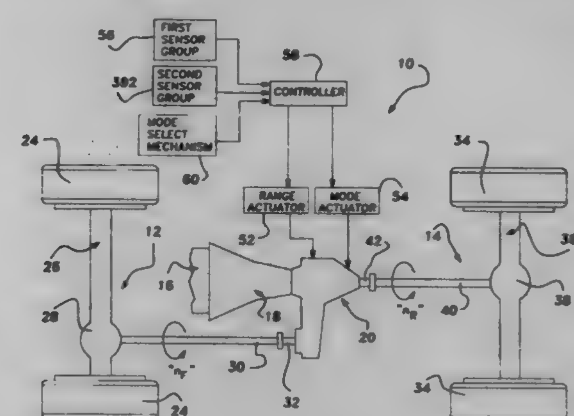

1. A power transfer system for a four-wheel drive motor vehicle having a power source and front and rear drivelines, comprising:

a transfer case including a housing; an input shaft rotatably supported in said housing and driven by the power source; a front output shaft rotatably supported in said housing and coupled to the front driveline; a rear output shaft rotatably supported in said housing and coupled to the rear driveline; a quill shaft supported on said rear output shaft for rotation relative thereto; a gear reduction unit operable for defining a high-range drive mode whereat said quill shaft is driven at a direct speed ratio relative to said input shaft and a low-range drive mode whereat said quill shaft is driven at a reduced speed ratio relative to said input shaft, said gear reduction unit including a layshaft rotatably supported in said housing and having first and second gears secured thereto, a high-range gear secured to said input shaft that is meshed with said first gear on said layshaft, and a low-range gear rotatably supported on said quill shaft that is meshed with and rotatably driven by said second gear on said layshaft; a clutch apparatus including a range sleeve supported for rotation with said quill shaft and movement between a first range position whereat said range sleeve couples said input shaft to said quill shaft for establishing said high-range drive mode and a second range position whereat said range sleeve couples said low-range gear to said quill shaft for establishing said low-range drive mode, and synchronizer means for causing speed synchronization between said input shaft and said quill shaft in response to movement of said range sleeve to said first range position, said synchronizer means further operable for causing speed synchronization between said quill shaft and said low-range gear in response to movement of said range sleeve to said second range position; a range actuator for moving said range sleeve; an interaxle differential interconnecting said quill shaft to said front and rear output shafts for permitting speed differentiation therebetween, said interaxle differential including a first sun gear fixed for rotation with said rear output shaft, a second sun gear rotatably supported on said rear output shaft and operably coupled to said front output shaft for rotation therewith, and a carrier assembly fixed for rotation with said quill shaft and having pinion gears journally supported therefrom that are meshed with said first and second sun gears; a transfer clutch operable for controlling speed differentiation between said front and rear output shafts, said transfer clutch including a set of first clutch plates supported for rotation with said front output shaft, a set of second clutch plates supported for rotation with said rear output shaft and which are alternately interleaved with said first clutch plates, a thrust mechanism movable between a first mode position whereat a minimum clutch engagement force is exerted on said clutch plates for permitting unrestricted speed differentiation between said front and rear output shafts and a second mode position whereat a maximum clutch engagement force is exerted on said clutch plates for inhibiting speed differentiation, and a biasing mechanism for normally biasing said thrust mechanism toward said first mode position; and a mode actuator for selectively moving said thrust mechanism;

sensor means for detecting dynamic and operational characteristics of the motor vehicle and generating sensor input signals indicative thereof;

a mode select mechanism for enabling a vehicle operator to select one of a full-time four-wheel high-range drive mode and apart-time four-wheel low-range drive mode and generating a mode signal indicative of the particular mode selected; and

a controller for controlling actuation of said range and mode actuators in response to said mode signal and said sensor input signals, said controller causing said range actuator to move said range sleeve to said first range position and said mode actuator to move said thrust mechanism between said first and second mode positions as a function of said sensor input signals for automatically controlling speed differentiation between said front and rear output shafts when said mode signal indicates selection of said full-time four-wheel high-range drive mode, and said controller causing said range actuator to move said range sleeve to said second range position and said mode actuator to move said thrust mechanism to said second mode position when said mode signal indicates selection of said part-time four-wheel low-range drive mode.

5,702,322

HYDRAULIC PRESSURE CONTROL SYSTEM FOR HYDRAULICALLY OPERATED VEHICLE TRANSMISSION

Satoru Sunada, and Shoichi Tanizawa, both of Wako, Japan, assignors to Honda Giken Kogyo Kabushiki Kaisha, Tokyo, Japan

Filed Feb. 29, 1996, Ser. No. 610,139

Claims priority, application Japan, Mar. 2, 1995, 7-068753

Int. Cl.^{6} F16H *59/48;61/06*

U.S. Cl. 477—120 **9 Claims**

1. A system for controlling hydraulic pressure of a hydraulically operated vehicle transmission, comprising:

vehicle operating condition detecting means for detecting parameters indicative of operating conditions of the vehicle;

3682 OFFICIAL GAZETTE

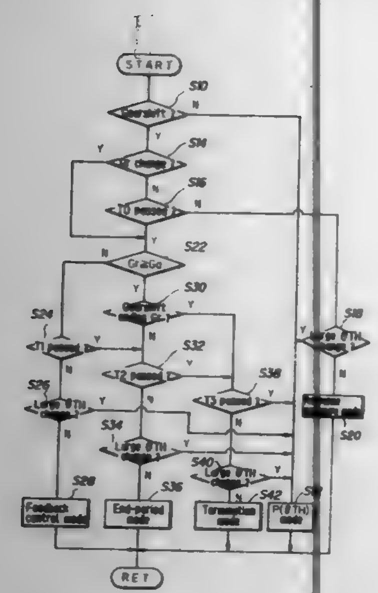

gearshift command output means for determining a gear ratio to be shifted to based on the detected parameters, to output a gearshift command;
a plurality of frictional engaging elements for selectively establishing one gear stage in the transmission;
speed detecting means for detecting a rotational speed of at least one of a plurality of rotational members of the transmission which changes at a time of gearshift;
desired rotational speed change rate determining means for determining a desired rotational speed change rate of the one rotational member based on at least one of the detected parameters; and
hydraulic pressure control means for controlling a supply of hydraulic pressure to at least one of the frictional engaging elements in response to the gearshift command such that the determined gear ratio is established to transmit engine power to a vehicle wheel, said hydraulic pressure control means operating to control the supply of hydraulic pressure to the frictional engaging element such that a change of the rotational speed of the one rotational member concurs with the desired rotational speed change rate;
wherein said hydraulic pressure control means includes:
parameter fluctuation discriminating means for discriminating whether the at least one of the parameters fluctuates; and
said hydraulic pressure control means discontinues the operation when said parameter fluctuation discriminating means discriminates that the parameter fluctuates, wherein said parameter fluctuation discriminating means discriminates fluctuation of at least one of the parameters by calculating a difference in values of the at least one of the parameters detected at different times.

5,702,323
ELECTRONIC EXERCISE ENHANCER
Craig K. Poulton, 2232 Melodie Ann Way, Salt Lake City, Utah 84124
Filed Jul. 26, 1995, Ser. No. 507,550
U.S. Cl. 482—8 **25 Claims**

1. An apparatus for training a user, the apparatus comprising:
an actuation device for presenting to a user a stimulus sensible by a user;
a controller operably connected to the actuation device and comprising a processor for processing data, a memory device for storing data, an input device for receiving feedback data corresponding to a condition of a user, and an output device for sending control signals for controlling the actuation device;
a tracking device operably connected to communicate the feedback data to the input device of the controller and including a sensor for detecting a condition of a user;

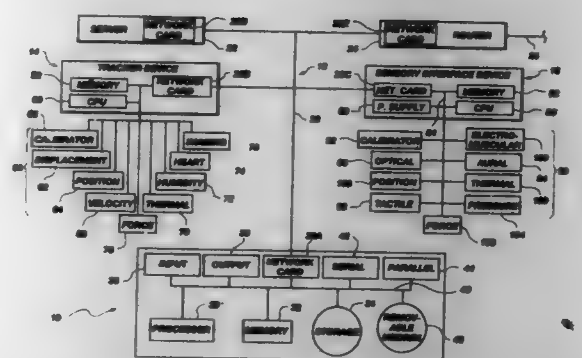

the controller further programmed to operate on input data provided independently from the user by a program executable by the processor, user data corresponding to inputs selected by a user, and feedback data corresponding to a user's condition and provided from the tracking device; and
the actuation device operably connected to the controller and tracking device for providing stimuli directly to a user according to a control signal corresponding to the feedback data, user data, and input data.

5,702,324
WRIST EXTENSOR EXERCISE DEVICE
Patricia A. Wendel, and Lawrence D. Wendel, both of 3020 Barnwood Crossing, Duluth, Ga. 30155
Filed Oct. 4, 1996, Ser. No. 726,388
Int. Cl.^{6} A63B *23/14*
U.S. Cl. 482—46 **10 Claims**

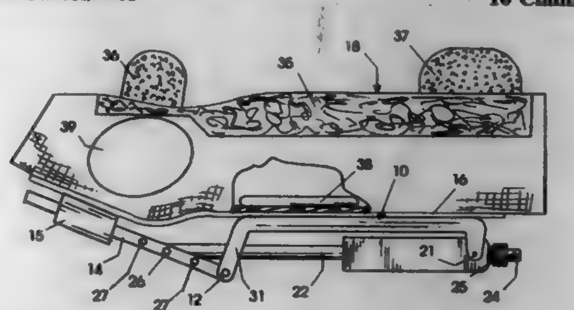

1. An exercise device for exercising the extensor muscles of the wrist, said exercising device comprising a rigid member adaptable to be fixed to the palmer side of a user's wrist, a hinged arm pivotal with respect to said rigid member and extending adjacent to the palm of said user's hand, means for fixing said hinged arm to said user's hand, and resistance means for resiliently resisting motion of said hinged arm when said user's hand is moved to exercise the extensor muscles, and including a flexible arm support fixed to said rigid member and to said hinged arm, said flexible arm support constituting a means for fixing said rigid member to a user's wrist and said means for fixing said hinged arm to said user's hand.

5,702,325
CABINET TREADMILL WITH HANDLE
Scott R. Watterson; William T. Dalebout, and Frank Troy Miller, all of Logan, Utah, assignors to ICON Health & Fitness, Inc., Logan, Utah
Filed Jan. 30, 1996, Ser. No. 593,794
Int. Cl.^{6} A63B *22/02*
U.S. Cl. 482—54 **18 Claims**

1. A treadmill comprising:
a freestanding housing having surface engaging means for engaging a support surface, and enclosure structure extending upwardly from said surface engaging means;

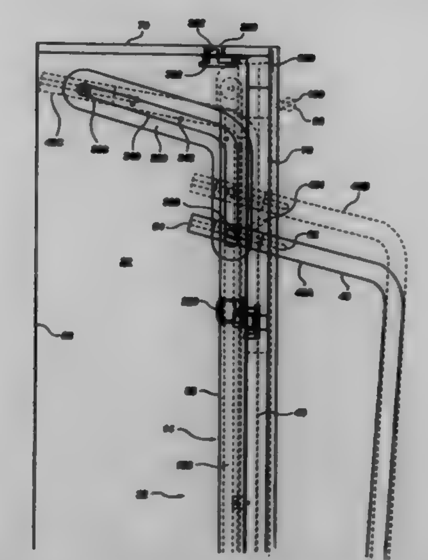

a tread base having a left side and a right side with an endless belt positioned thereinbetween, said tread base being movably attached to said freestanding housing to be orientable between a first position in which said tread base extends away from said freestanding housing with said endless belt positioned to support a user performing exercises thereon and a second position in which said tread base is positioned into said freestanding housing;
handle means connected at a lower end to said tread base and at an upper end to said freestanding housing, said handle means being positioned for grasping by a user positioned on said endless belt with said tread base in said first position; and
wherein said enclosure structure includes a first side and race structure having a first race attached to said first side and wherein said handle means includes a handle with an upper end attached by structure that moves in said first race and a lower end rotatably attached to one of said left side and said right side of said tread base.

5,702,326
WALKING ASSISTANCE DEVICE
William Renteria, Lakewood, Colo., assignor to Versatex Inc., Lakewood, Colo.
Filed May 21, 1996, Ser. No. 651,872
Int. Cl.^{6} A63B *22/20*
U.S. Cl. 482—68 **14 Claims**

1. A walking assistance device for use in indoor areas as well as

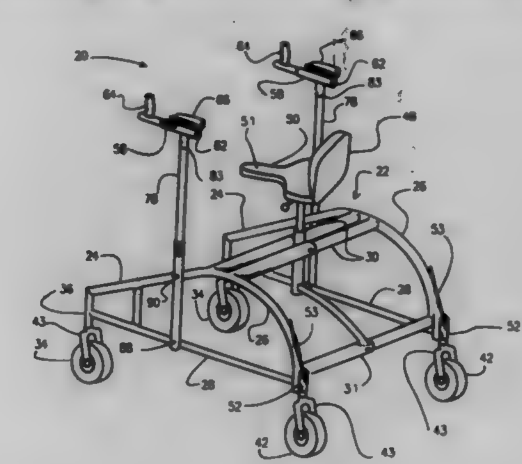

in outdoor areas, the walking assistance device comprising:
frame means having:
a pair of spaced apart sides;
a pair of front wheels mounted to said frame means on means for allowing rotation of each of the front wheels about a vertical axis;
seat support means mounted between said spaced apart sides;
at least one rear wheel attached to said frame means on means for allowing rotation of the rear wheel about a vertical axis;
straddleable seat means mounted on the seat support means of said frame means; and
means for selectively preventing the rotation of the rear wheel about a vertical axis, said means for selectively preventing the rotation of the rear wheel about a vertical axis comprising a slideable collar having means for engaging the means for allowing rotation of the rear wheel, the slideable collar being slideable between a first position where the means for allowing rotation of the rear wheel is prevented from allowing rotation of the rear wheel and a second position where the means for allowing rotation of the rear wheel allows rotation of the rear wheel, so that a person's body weight may be at least partially supported by said straddleable seat and said rear wheel allowed to rotate about a vertical axis as a person walks in an indoor area, and so that a person's body weight may be at least partially supported by said straddleable seat and said rear wheel prevented from rotating about a vertical axis as a person walks in an outdoor area.

5,702,327
APPARATUS AND METHOD FOR MARTIAL ARTS TRAINING
Marshall Fullbright, 106 Blair Mill Rd., Belton, S.C. 29627
Filed Mar. 18, 1996, Ser. No. 618,042
Int. Cl.^{6} A63B *64/20*
U.S. Cl. 482—83 **24 Claims**

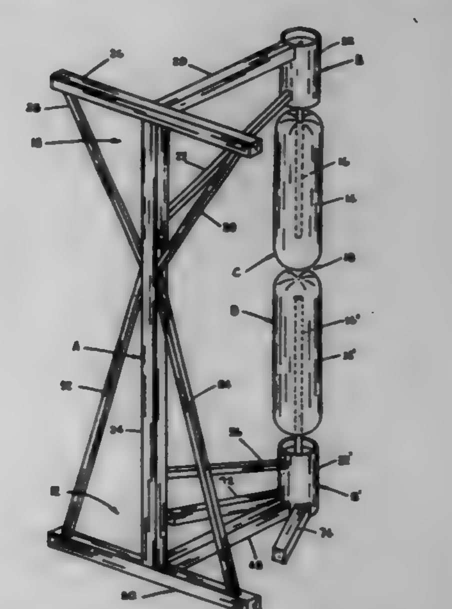

1. A training apparatus for the martial arts comprising:
an upright rigid stand having an upper overhead frame portion and a lower base frame portion which is supported on a floor surface;
an upper padded dummy carried by said overhead frame portion;
an upper, rigid elongated core connected to said upper padded dummy;
an upper pivot joint assembly carried by said overhead frame portion of said upright stand, and said upper elongated core being affixed to said upper pivot joint assembly providing omni-directional movement of said upper padded dummy relative to said overhead frame portion;
a lower padded dummy carried by said base frame portion of said upright stand;

a lower, rigid elongated core connected to said lower padded dummy;
a lower pivot joint assembly carried by said base frame portion of said stand, said lower core element being affixed to said lower pivot joint assembly providing omni-directional movement of said lower padded dummy relative to said base frame portion independent of said movement of said upper padded dummy; and
said upper dummy and said lower dummy being in a substantial superposed alignment so as to be capable of being struck in various combinations of quick successive kicks and/or punches.

5,702,328
EXERCISING DEVICE
Michael Joachim Mansvelt, 11 Jameson Circle Vanes Estate, Uitenhage, South Africa, 6230
Filed Dec. 18, 1995, Ser. No. 574,146
Claims priority, application South Africa, Dec. 20, 1994, 94/10110
Int. Cl.[6] **A63B** *21/068*
U.S. Cl. 482—96 **2 Claims**

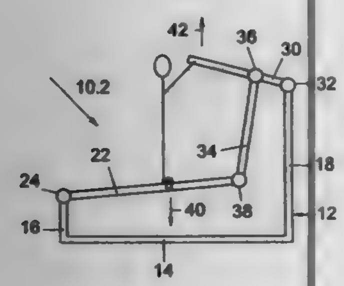

1. An exercise device, comprising;
a) a base part;
b) a first upwardly extending part extending upwardly from the base part;
c) a second upwardly extending part spaced from the first upwardly extending part and extending upwardly from the base part;
d) a lever frame for supporting a person thereon;
e) pivotation means for pivotally supporting the lever frame relative to the first upwardly extending part such that the lever frame is located substantially between the first and second upwardly extending parts; and
f) engagement means, associated with the second upwardly extending part, for acting on the second upwardly extending part at a position higher than the lever frame so as to permit a person supported on the lever frame to engage with the engagement means to pivot the lever frame upwardly by way of the pivotation means against the force of the person's weight acting on the lever frame and to thereby lift the person supported on the lever frame, the engagement means including a first link pivotally connected at one end to the second upwardly extending part and having a free end; a second link pivotally connected at one end to the lever frame remote from the pivotation means and pivotally connected at its opposite end to the first link between said one end of the first link and said free end of the first link; and a gripping means associated with said free end of the first link for allowing a person to grip said gripping means to exert an upwardly directed pulling force to cause pivoting of the first link and to thereby lift the second link, to pivot the lever frame about the pivotation means and to thus lift a person supported on the lever frame.

5,702,329
EXERCISE APPARATUS
Larry Koenig, Williamsburg, Iowa, assignor to Jam'n Fitness Corp., Williamsburg, Iowa
Continuation of Ser. No. 475,355, Jun. 7, 1995, Pat. No. 5,529,558. This application Mar. 21, 1996, Ser. No. 621,291
Int. Cl.[6] **A63B** *21/06*
U.S. Cl. 482—97 **20 Claims**

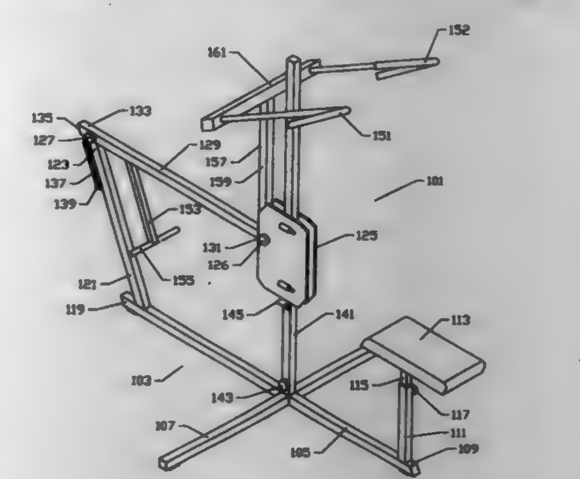

1. Exercise apparatus comprising
a base having a first end and a second end,
an upstanding bar mounted upon the second end of said base,
an upwardly extending mast pivotably mounted to the base between said first and second ends thereof,
the upstanding bar having an elongate pivot arm pivotably mounted thereto,
the pivot arm pivotable in a vertical plane,
said pivot arm having a free end opposing its attachment to said upstanding bar,
said free end of said pivot arm provided with a head member engaged with said mast and movable therealong,
user engagement means mounted to said head member,
said pivot arm having an elongate arm mounted thereto and depending therebeneath,
means for suspending weights from said elongate arm,
seat means associated with said base.

5,702,330
MALE EXERCISE DEVICE AND METHOD
Michael A. De Monbrun; Dianne L. De Monbrun, both of 3086 Horizon Dr., Santa Ynez, Calif. 93460; Jammie Sant, and David M. Sant, both of 4723 Don Pio Dr., Woodland Hills, Calif. 91364
Continuation-in-part of Ser. No. 59,957, Sep. 18, 1996. This application Oct. 25, 1996, Ser. No. 740,234
Int. Cl.[6] **A63B** *21/065*
U.S. Cl. 482—105 **16 Claims**

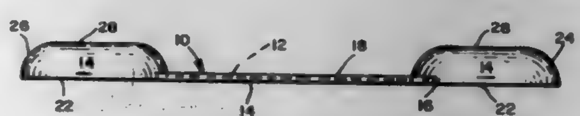

1. An exercise device for strengthening the pubococcygeus muscle of a male person comprising:
a flexible elongate member having weighted end portions of substantially equal weight, said elongate member including said weighted end portions being of rubber, said weighted end portions respectively include supplemental weights embedded therein, said supplemental weights having a density different than the density of said rubber, said elongate member adapted for being flexurally retained on an erect penis of the male person transversely of the penis with said weighted end portions respectively dependent from opposite sides of the penis while Kegel exercises are performed by the male person.

5,702,331
NON-GRIPPING HAND/FOOT RESISTANCE PRODUCING AQUATIC EXERCISE APPARATUS AND METHOD OF USE
Christine M. Perham, 4600 N. Kain #40, Tucson, Ariz. 85705
Filed Sep. 26, 1996, Ser. No. 721,607
Int. Cl.[6] **A63B** *21/008*
U.S. Cl. 482—111 **15 Claims**

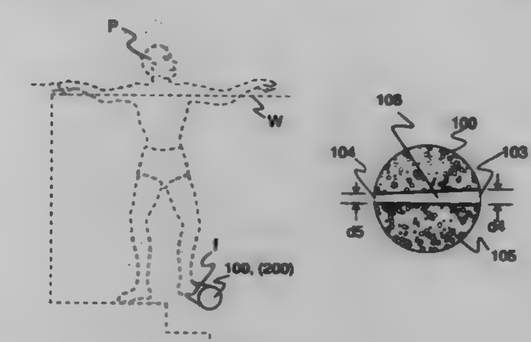

1. A resistance producing aquatic exercise apparatus, said apparatus comprising:
a geometrically shaped, buoyant body; and
a port for receiving a terminal part of a human's limb, said port being centrally positioned on said buoyant body, said port defining a cavity sized for receiving the said terminal part and facilitating a non-gripping securement of said buoyant body by an exerciser to enable a grip-free, resisted manipulation of said buoyant body in a water exercising environment, said geometrically shaped, buoyant body comprising a substantially short, flexible, columnar, buoyant body constructed from polyethylene expanded foam material, said columnar, buoyant body being sized larger when the terminal part is a foot than when the terminal part is a hand, and said cavity comprises a rectangular shaped, tapered through-hole sized such that a height dimension associated with an entry side is larger than a height dimension associated with an exit side of said through-hole.

14. A method of producing resistance by an exerciser exercising in an aquatic environment using aquatic exercise equipment without exerting a gripping force on said aquatic exercise equipment, said method comprising the steps of:
(a) providing at least one, resistance producing aquatic exercise apparatus, said apparatus comprising:
a geometrically shaped, buoyant body; and
a port for receiving a terminal part of the exerciser's limb, said port being centrally positioned on said buoyant body, said port defining a cavity sized for receiving the terminal part and facilitating a non-gripping securement of said buoyant body by said exerciser to enable a grip-free, resisted manipulation of said buoyant body in a water exercising environment, said cavity being a rectangular shaped, tapered through-hole sized such that a height dimension associated with an entry side is larger than a height dimension associated with an exit side of said through-hole;
(b) the exerciser selecting said provided aquatic exercise apparatus and preparing to exercise in said aquatic environment;
(c) the exerciser selecting an exerciser's foot for inserting into said port;
(d) inserting the exerciser's foot into said cavity; and
(e) producing resistance by manipulating said buoyant body in said aquatic environment without said inserted terminal part having to exert a gripping force on said aquatic exercise equipment.

5,702,332
DUAL EXERCISE APPARATUS WITH RESISTANCE ADJUSTMENT AND INTERCONNECTION ARRANGEMENT FOR USER MOVABLE ELEMENTS
Yi Fong Hsieh, Succasunna, N.J., assignor to LifeGear, Inc., Rockaway Township, N.J.
Filed Mar. 22, 1996, Ser. No. 621,293
Int. Cl.[6] **A63B** *21/04*
U.S. Cl. 482—130 **9 Claims**

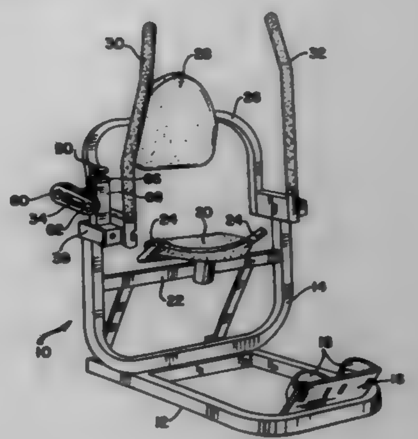

1. Exercise apparatus including:
a fixed support;
a pair of movable elements each adapted for user manipulation in a respective direction during a respective one of a pair of independent exercises;
an elastic resistance element; and
an arrangement for coupling together the fixed support, the pair of movable elements and the resistance element, the arrangement comprising:
a pair of intermeshed circular gears mounted to said fixed support for rotation in opposite angular directions each about a respective one of a pair of parallel axes;
means for securing a first of said movable elements to a first of said gears for rotation therewith;
means for securing the second of said movable elements to the second of said gears for rotation therewith;
first holding means secured to one of said movable elements for holding a first end of said resistance element; and
second holding means secured to said fixed support for holding the second end of said resistance element;
wherein one of said first and second holding means includes means for selectively varying the position of the respective end of said resistance element relative to the respective one of said movable elements and said fixed support to provide a desired pre-tension to said elastic resistance element, whereby the amount of resistance provided by said resistance element is adjustable.

5,702,333
METHOD OF SAFELY STRETCHING AND STRENGTHENING THE LUMBAR SPINE AND LUMBAR MUSCLES
David W. Waldron, 221 Anderson Pl., Buffalo, N.Y. 14222, and Richard J. Waldron, 257 Ethel, Mill Valley, Calif. 94941
Division of Ser. No. 412,446, Mar. 29, 1995. This application Feb. 9, 1996, Ser. No. 599,172
Int. Cl.[6] **A63B** *23/02*
U.S. Cl. 482—131 **17 Claims**

1. A method of beneficially and safely affecting the lumbar spine of a human, comprising the steps of:
(a) providing a substantially rigid device having a concavely curved top surface her or and a curved bottom surface, supported by a support surface, which allows rocking action in a dimension extending from the front to the rear of the device,

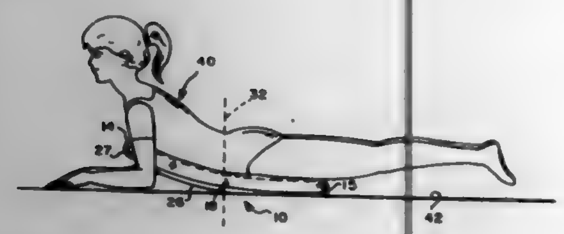

the length of the device between the front and the rear ranges from about 18 inches to less than six feet whereby the top surface is configured and dimensioned so as to allow the human to safely passively extend his or her spine when the human lays with his or her stomach on the top surface;

(b) a human occasionally laying with her or his stomach on the top surface, with at last part of her or his chest and thighs supported by the top surface and her or his face extending past the front of the device, so that the lumbar spine is in a safely passively extended position allowing lumbar muscles to become thicker and stronger; and

(c) the human occasionally contracting her or his lumbar muscles and rocking her or his body toward and away from the front of the device to effect rocking action of the device, which assists in strengthening of her or his lumbar musculature promoting stability of her or his back.

5,702,334

ABDOMEN FITNESS EQUIPMENT

Chi-Jung Lee, No. 61, May Chou II Rd., I Lan City, I Lan Hsien, Taiwan

Filed Sep. 23, 1996, Ser. No. 716,735

Int. Cl.^{6} A63B *23/02*

U.S. Cl. 482—140 **1 Claim**

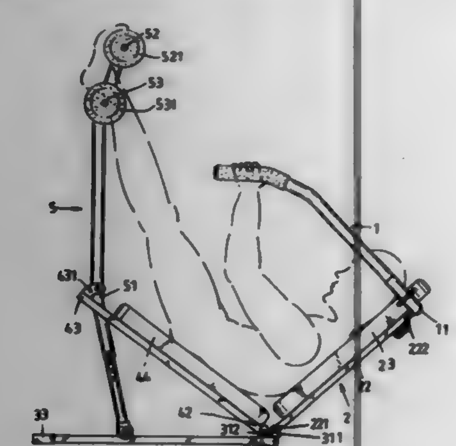

1. An abdomen fitness equipment comprising a front base frame unit carrying a cushion, a substantially U-shaped handle having a middle section fixedly fastened to one end of said front base frame unit, a rear base frame unit pivoted to said front base frame unit, a rear movable frame unit pivoted to one end of said rear base frame unit and carrying a seat, and a movable leg frame unit pivoted to said rear base frame unit and capable of being pulled by a user's legs to lift said movable frame unit from said rear base frame unit, wherein:

said rear base frame unit comprises a transverse front end rod, a transverse rear end rod, a longitudinal rod connected between said transverse front end rod and said transverse rear end rod, a first pair of U-frames fixedly and bilaterally mounted on said transverse front end rod at a front side for pivotally connecting said front base frame unit, and a second pair of U-frames fixedly and bilaterally mounted on said transverse front end rod at a rear side for pivoted-connecting one end of said rear movable frame unit;

said rear movable frame unit comprises a substantially U-shaped frame rod having two opposite ends respectively pivoted to the second pair of U-frames of said rear base frame unit, two lugs fixedly secured to a middle section of said U-shaped frame rod for bilaterally pivoted connecting said movable leg frame unit;

said movable leg frame unit comprises a base frame rod, and an extension frame rod, the base frame rod of said rear movable leg frame unit being inserted through a gap defined between the seat of said movable frame unit and the middle section of said rear movable frame unit said base frame rod and pivotably connected between the lugs of said movable frame unit, having a locating hole at a bottom end and connected to said extension frame rod by a fastening device, said extension frame rod comprising a longitudinal series of locating holes at one end adapted for fastening to the locating hole of said base frame rod by said fastening device, and a pulley at an opposite end for moving along the longitudinal rod of said rear base frame unit, said pulley having two locating plates at two opposite sides adapted for guiding the movement of said pulley along the longitudinal rod of said rear base frame unit.

5,702,335

REMOTE DRILL BIT LOADER

James A. Dokos, Idaho Falls, Id., assignor to United States Department of Energy, Washington, D.C.

Filed Mar. 13, 1996, Ser. No. 614,871

Int. Cl.^{6} B23Q *3/157*

U.S. Cl. 483—1 **8 Claims**

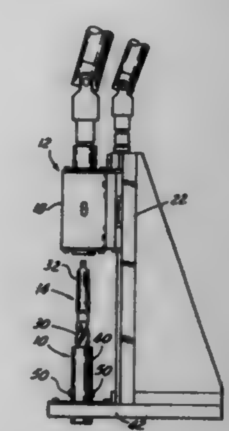

2. A method of loading a tapered shank of an elongated drill bit into a similarly tapered elongated recess in the end of an axially movable and rotatable drill spindle, wherein the recess has an inner end within the spindle, the spindle has a transverse slot at the inner end of the recess, and the tapered shank has an end provided with a transverse tang adapted to engage in said slot when said tang is aligned with said slot, said method comprising:

providing an elongated cylinder having an open outer end and adapted to receive the drill bit axially therewithin with the tapered shank of the drill bit projecting out of the outer end of the cylinder and the transverse tang disposed outwardly beyond said outer end of the cylinder,

mounting the cylinder with its outer end adjacent to the spindle and in alignment with the spindle recess,

axially moving the spindle toward the cylinder so that the shank of the drill bit will enter the recess in the spindle,

rotating the spindle to align the tang and slot,

retaining the drill bit from rotation when the spindle is rotated,

and applying spring pressure on the drill bit during its entry into the recess to resiliently drive said tang into the slot in said spindle when the tang and slot aligned.

5,702,336

TOOL MAGAZINE HAVING GRIPS CAPABLE OF MAINTAINING TOOL GRIPPING FORCE REGARDLESS OF ORIENTATION OF MAGAZINE DISK

Fumio Kameyama, Nagoya, Japan, assignor to Brother Kogyo Kabushiki Kaisha, Aichi-ken, Japan

Filed Jun. 7, 1996, Ser. No. 659,253

Claims priority, application Japan, Jun. 23, 1995, 7-157421

Int. Cl.^{6} B23Q *3/157*

U.S. Cl. 483—56 **14 Claims**

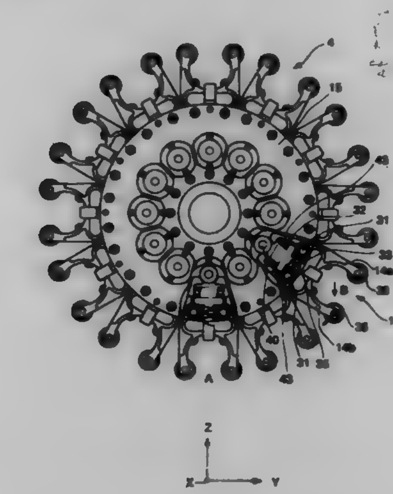

1. A tool magazine for accommodating a plurality of tools and transferring a selected one of the tools with respect to a spindle of a machine tool, the tool magazine comprising:

a magazine disk rotatable about a horizontal axis;

at least one grip comprising a pair of first and second arm members pivotally supported on the magazine disk and extending in a radial direction of the magazine disk, the first and second arm members having tool gripping portions movable toward and away from each other for gripping and releasing the tool by the pivotal movement of the arm members;

a biasing member provided between the pair of first and second arm members for normally urging the first and second arm members to their tool gripping positions; and

interlocking means provided at the first and second arm members for pivotally and symmetrically moving one of the first and second arm members interlockingly with pivotal movement of the remaining one of the second and first arm members.

5,702,337

ROLL ARRANGEMENT

Sandra Renn, and Wolf Gunter Stotz, both of Ravensburg, Germany, assignors to Voith Sulzer Papiermaschinen GmbH, Heidenheim, Germany

Filed Jun. 21, 1995, Ser. No. 493,879

Claims priority, application Germany, Jul. 1, 1994, 44 23 212.8

Int. Cl.^{6} B23P *15/00*

U.S. Cl. 492—7 **34 Claims**

1. A roll arrangement comprising a rotatable roll jacket, in particular an elastic roll jacket, a rotationally fixed carrier and at least one support arrangement disposed between the roll jacket and the carrier, the support arrangement having a foot associated with the carrier and a sliding shoe mounted on the foot and movable in the radial direction relative to the roll jacket, the sliding shoe having a support surface associated with the roll jacket, wherein the foot is displaceably supported at the carrier and the support arrangement is of at least two-part construction and contains a

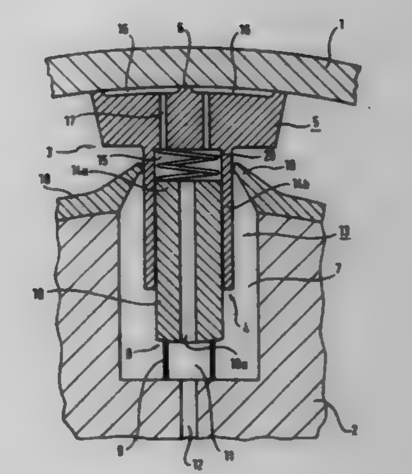

tilting support which permits a tilting of the sliding shoe relative to the carrier.

5,702,338

HEAT TREATING, ANNEALING AND TUNNEL FURNACE ROLLS

Jorge A. Morando, 34210 James J. Pompo Dr., Fraser, Mich. 48026

Continuation of Ser. No. 287,647, Aug. 9, 1994, abandoned, which is a continuation-in-part of Ser. No. 36,328, Mar. 24, 1993, Pat. No. 5,338,280. This application Oct. 11, 1995, Ser. No. 540,800

Int. Cl.^{6} B23P *15/00*

U.S. Cl. 492—30 **20 Claims**

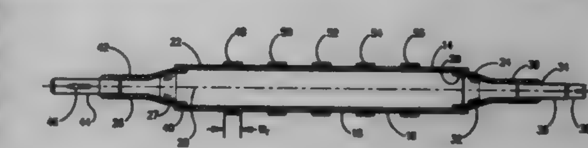

1. A roll for transporting a heated, metal strip material comprising:

an elongated roll body; and

a plurality of generally circumferential wear rings encircling said roll body,

wherein each of said wear rings has a radius extending greater than the radial dimension of said roll,

said wear rings having an outer surface adapted for contacting and supporting said metal strip material during transport thereof,

and wherein said outer surface is composed of a metal or metal alloy whose constituent metals have low coefficients of adhesion in compression with respect to said strip material being transported and supported by said rolls.

5,702,339

METHOD FOR MAKING A HEAVY DUTY BAG HAVING AN EASY OPENING SPOUT

Gregory B. Smiley, Tyler, Tex., assignor to Bonar Packaging, Inc., Tyler, Tex.

Division of Ser. No. 407,979, Mar. 22, 1995, Pat. No. 5,636,925. This application Jan. 31, 1997, Ser. No. 790,719

Int. Cl.^{6} B31B *1/20*

U.S. Cl. 493—196 **14 Claims**

8. A method for making a plastic, heavy duty bag, adapted to be filled with a desired product, comprising the steps of:

(a) forming a tubular shaped member of low density polyethylene plastic having a thickness of approximately 4 to 8 mils;

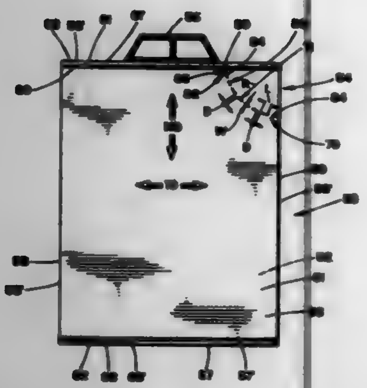

(b) flattening the tubular shaped member to form a front wall, having first and second ends and first and second side edges, and a rear wall having first and second ends and first and second side edges;
(c) forming a perforation in the front and rear walls extending from a first location adjacent the first ends of the front and rear walls to the second side edges, the perforation being substantially radially disposed from a second location where the first ends and second side edges intersect;
(d) forming a slit in the first ends of the front and rear walls only extending from the first location to the first ends of the front and rear walls, the slit disposed in alignment with a portion of the perforation disposed adjacent the first location;
(e) joining the front and rear walls to each other adjacent their first ends by heat sealing together a portion of the front wall to the rear wall to provide an integral heat sealing strip disposed substantially parallel to, and spaced from, the first ends of the front and rear walls, and providing a skirt portion of each of the first ends of the front and rear walls extending above the heat sealing strip, the slits being disposed in the skirt portions, whereby upon pulling the skirt portions adjacent the slit, the heat sealing strip may be tom through, and further pulling separates the perforation to provide a pouring spout in the bag.

5,702,340
METHOD OF MANUFACTURE OF A GLUED BOTTOM BULK CONTAINER
Norwin C. Derby, Dallas, Tex., assignor to Super Sack Mfg. Corp., Dallas, Tex.
Continuation-in-part of Ser. No. 160,229, Dec. 2, 1993, Pat. No. 5,490,828. This application Dec. 1, 1995, Ser. No. 566,076
Int. Cl.⁶ B31B *47/00;1/62;49/04*
U.S. Cl. 493—220 **9 Claims**

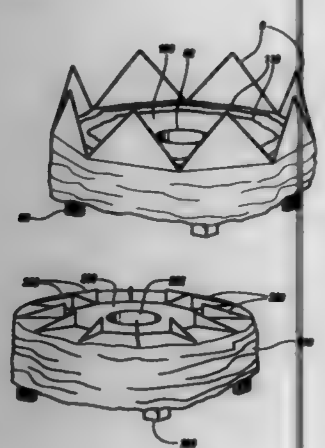

1. A method of manufacturing a flexible bulk container having a sidewall and bottom wall, said method comprising the steps of:
(a) supplying a sidewall blank having a substantially hollow tubular configuration, said sidewall blank having an upper portion and a lower portion and an inside and an outside, said upper portion being cut in a sawtooth configuration including a plurality of adjacent triangular shaped flaps;
(b) supplying a bottom wall of octagonal horizontal cross-sectional shape;
(c) placing the bottom wail on a raised work area;
(d) applying adhesive to the bottom wall;
(e) positioning the sidewall blank over the raised work area and lowering the sidewall blank such that the lower portion of the sidewall blank is located below the work area and the upper portion is located above the work area; and
(f) subsequent to steps (a) through (e), securing the sidewall blank to the bottom wall by folding the upper portion of the sidewall blank over the bottom wail, such that the inside of the blank contacts the adhesive located on the bottom wall.

5,702,341
FOLDER FOR SELECTIVELY PRODUCING ONCE OR TWICE CROSS-FOLDED PRODUCTS
Theo Keilhau, Neusiss, Germany, assignor to MAN Roland Druckmaschinen AG, Offenbach am Main, Germany
Filed Apr. 22, 1996, Ser. No. 635,695
Claims priority, application Germany, Apr. 26, 1995, 195 15 268.9
Int. Cl.⁶ B65H *45/16*
U.S. Cl. 493—426 **9 Claims**

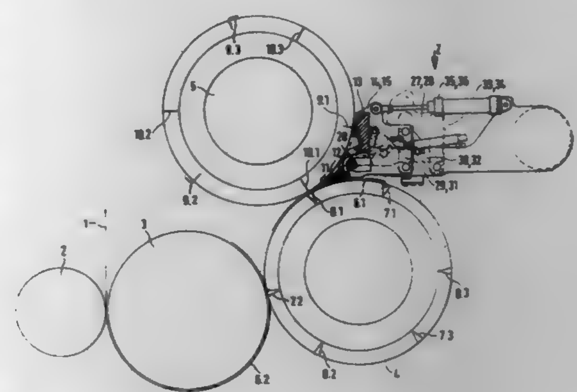

1. A folder for selectively producing once or twice cross-folded product, comprising:
a jaw cylinder having a first perimeter with at least two folding jaws arranged thereon with a perimeter spacing that corresponds to the spacing between the first and the second cross-folds of the product;
a gripper/folding knife cylinder having a second perimeter arranged adjacent to the jaw cylinder so as to define a runout gap between the first and second perimeters;
a tongue member configured to guide a sheet in the runout gap, the tongue member having a guide area approximately concentric relative to the jaw cylinder such that the guide area is complementary to the first perimeter of the jaw cylinder when the tongue member is positioned in the runout gap;
a tongue bar arranged behind the tongue member and having a guide surface approximately concentric relative to the gripper/folding knife cylinder such that the guide surface is complementary to the second perimeter of the gripper/folding knife cylinder;
means for moving the tongue member into and out of the runout gap such that when the tongue member is positioned in the runout gap a product is directed between the jaw cylinder first perimeter and said tongue member guide area of the tongue member for the production of products with one cross-fold and

when the tongue is out of the runout gap a product is directed between said gripper/folding knife cylinder and said tongue bar guide surface for the production of products with two cross-folds; and
a guide device having a substantially arc-shaped contour directed toward the runout gap and arranged behind the tongue member so that when the moving means moves the tongue member out of the runout gap the guide device faces the runout gap to guide a product for the production of products with two cross-folds.

5,702,342
DIRECTIONALLY-CONTROLLABLE MOUNTING APPARATUS
Michael Eugene Metzler, St. Louis, and Louis Richard Saller, Imperial, both of Mo., assignors to Otologics LLC., St. Louis, Mo.
Division of Ser. No. 137,317, Oct. 14, 1993. This application Jun. 7, 1995, Ser. No. 471,891
Int. Cl.⁶ H04R *25/00*
U.S. Cl. 600—25 **22 Claims**

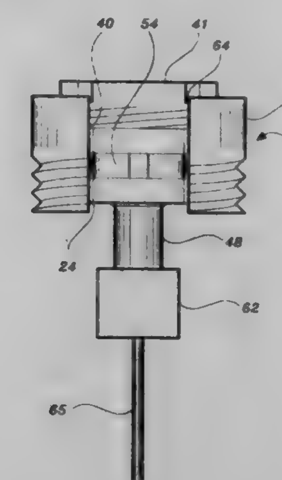

1. An implantable hearing aid system comprising:
a primary casing having a first end portion and a second end portion, said primary casing comprising a side wall having an interior surface and an exterior surface, said primary casing further comprising a shoulder extending from said interior surface of said side wall at said first end portion of said primary casing, said shoulder having an interior surface, said interior surface of said shoulder and said interior surface of said side wall defining an interior space within said primary casing, said shoulder defining an aperture through said primary casing whereby said interior space is in communication with an external environment of said primary casing;
a first washer disposed within said interior space defined within said primary casing, said first washer having a first surface abutting said interior surface of said shoulder and a second surface opposite said first surface, said first washer defining an aperture therethrough;
a mounting post having a first end portion and a second end portion, said mounting post having a frictional retention member mounted thereon, said first end portion of said mounting post passing through said aperture defined through said first washer and through said aperture defined by said shoulder, said frictional retention member abutting said second surface of said first washer;
a second washer having a first surface and a second surface, said first surface of said second washer abutting said frictional retention member, said second washer being disposed within said interior space defined within said primary casing, said second washer defining an aperture therethrough; and
a lock ring secured to said primary casing, said lock ring abutting said second surface of said second washer, whereby said lock ring urges said second washer into abutment with said frictional retention member and urges said frictional retention member into abutment said first washer when said lock ring is secured to said primary casing, and whereby said frictional retention member is frictionally retained between said first washer and said second washer when said lock ring is secured to said primary casing; and
a transducer mounted on said first end portion of said mounting post, said transducer being adapted to be coupled to a portion of a human auditory system.

5,702,343
CARDIAC REINFORCEMENT DEVICE
Clifton A. Alferness, Redmond, Wash., assignor to Acorn Medical, Inc., Minnetonka, Minn.
Filed Oct. 2, 1996, Ser. No. 720,556
Int. Cl.⁶ A61F *13/00*
U.S. Cl. 600—37 **14 Claims**

1. A cardiac reinforcement device, said device comprising:
a jacket of a biomedical material which can be applied to the epicardial surface of the heart and which expands to a predetermined size, said predetermined size selected to surround the epicardial surface of the heart and circumferentially constrain cardiac expansion beyond a predetermined limit, said jacket comprising:
(i) a base end, said base end having an opening for applying said jacket to the epicardial surface of the heart by passing said jacket over the epicardial surface of the heart such that when applied to said epicardial surface, said base end of said jacket is oriented toward the base of the heart; and (ii) a slot for selectively adjusting said predetermined size of said jacket, said slot having opposing lateral edges which decrease said predetermined size of said jacket by moving said opposing lateral edges together.

5,702,344
SAFE ENDOSCOPIC ACCESSORY
Fred E. Silverstein, Seattle, Wash., assignor to University of Washington, Seattle, Wash.
Filed May 30, 1995, Ser. No. 454,543
Int. Cl.⁶ A61B *1/00*
U.S. Cl. 600—104 **26 Claims**

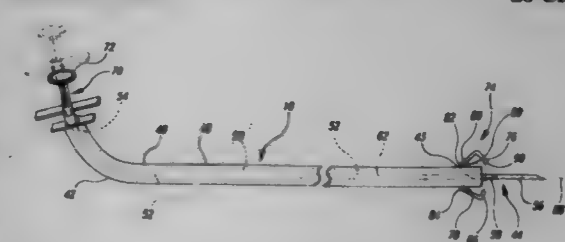

1. An endoscopic accessory and tubular member combination, comprising:

a tubular member having first axial walls defining a channel;
a catheter movably positioned in said channel, said catheter having an open distal end and second axial walls defining an interior area;
an endoscopic tool positioned within said interior area, said endoscopic tool being movable relative to the catheter between a protected position with a first end of said endoscopic tool within said interior area and an exposed position with said first end of said endoscopic tool exposed through said open distal end; and
a retaining member connected to said catheter adjacent to said open distal end, said retaining member selectively retaining said endoscopic tool in said protected position, said retaining member being movable between a first position with said endoscopic tool being prevented from moving toward said exposed position and a second position with said retaining member being positioned to allow said endoscopic tool to move relative to said catheter toward said exposed position, said retaining member being sized to fit within said channel when said endoscopic tool is in said protected position, said first axial walls of said tubular member blocking said retaining member from moving to said second position.

5,702,345
VIDEO LAPAROSCOPE WITH SEALED VIDEO PROCESSOR MODULE AND ILLUMINATION UNIT
Robert J. Wood, Syracuse; Michael J. Pileski, Skaneateles, and Gregory E. Pasik, Auburn, all of N.Y., assignors to Welch Allyn, Inc., Skaneateles Falls, N.Y.
Continuation of Ser. No. 944,221, Sep. 11, 1992, Pat. No. 5,441,043. This application Jul. 28, 1995, Ser. No. 508,672
Int. Cl.⁶ A61B *1/04*
U.S. Cl. 600—109 **9 Claims**

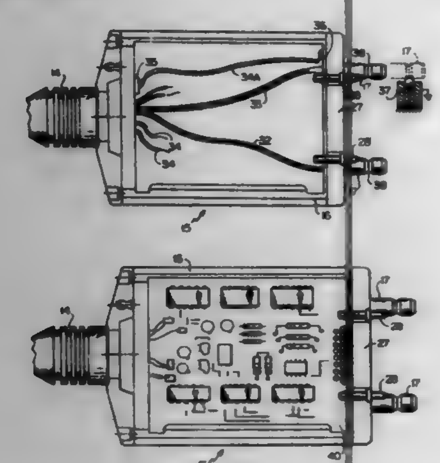

1. A video laparoscope which comprises an elongated insertion tube which includes a lens assembly for focussing light which enters a distal end of the insertion tube onto a miniature video imager which produces an image signal that represents a target located distally of the insertion tube; a plug-in video processor module connected by an umbilical to said insertion tube and including a sealed housing, video processing circuitry receiving power from terminals of an electrical connector on said housing and providing control and synchronizing signals to said video imager and processing the image signal therefrom to furnish to output terminals of said electrical connector a standard format video signal suitable for a video monitor to produce a picture of said target; a fiber optic bundle having a proximal end extending from a proximal end of the module, and extending through said umbilical and said insertion tube to a distal end thereof from which light carried by the bundle is incident upon said target to illuminate same; and a light and power unit including a cabinet which has a socket into which said video processor module is removably inserted, a power supply in said cabinet providing electrical power at a suitable level to a mating electrical connector in said socket which contacts the electrical connector of said processor module, and a light source within said cabinet providing illumination onto the proximal end of the said fiber optic bundle when said processor module is fully inserted into said socket; wherein said processor module housing includes a threaded pressure test aperture therethrough, and a threaded plug sealably fitted therein, and wherein said processor module is filled with a dry inert gas under a suitable pressure exceeding one atmosphere.

5,702,346
DENTAL IMPLANT FIXTURE FOR ANCHORAGE IN CORTCAL BONE
Richard J. Lazzara, 1814 N. "R" St., Lake Worth, Fla. 33460, and Keith D. Beaty, 245 Miramar Way, West Palm Beach, Fla. 33405
Continuation of Ser. No. 222,928, Apr. 5, 1994, abandoned, which is a continuation of Ser. No. 845,138, Mar. 3, 1992, Pat. No. 5,364,268. This application Feb. 14, 1996, Ser. No. 601,453
Int. Cl.⁶ A61C *8/00*
U.S. Cl. 433—173 **150 Claims**

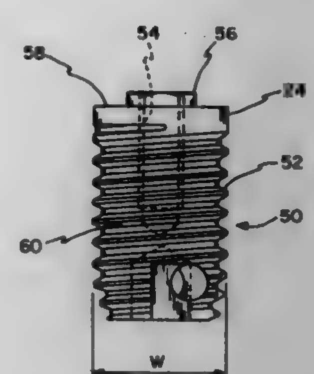

1. A dental implant for installation in a living human jawbone, said human jawbone having cancellous bone tissue internally and cortical bone tissue externally, said cortical bone tissue including lingual and buccal cortical plates joined by a superior cortical bone, said lingual and buccal cortical plates bounding said cancellous bone tissue of said jawbone and being separated by a buccal-to-lingual thickness, said implant comprising:
an implant body having a gingival end to be located near said superior cortical bone and an apical end to be located within said jawbone a length dimension L from said gingival end, said implant body having a thread making multiple turns around said body and suitable for engaging at least one of said lingual and buccal plates, said implant body further having a width dimension W that is at least about 5.0 mm and substantially constant for a substantial portion of the distance between said apical and gingival ends; and
stop means at said gingival end for stopping penetration of said gingival end beyond said superior cortical bone, said stop means including a flange with a maximum diameter that is approximately no larger than a peak-to-peak diameter of said thread on said implant body.

5,702,347
ENDOSCOPE SYSTEM INCLUDING ENDOSCOPE AND DISPOSABLE PROTECTION COVER
Hisao Yabe, Hachioji; Yoshihiro Iida, Tama; Akira Suzuki; Hideo Ito, both of Hachioji; Yoshio Tashiro, Hiro; Minoru Yamazaki; Osamu Tamada, both of Hachioji; Masaaki Nakazawa, Hino, and Koji Yamaya, Hachioji, all of Japan, assignors to Olympus Optical Co., Ltd., Tokyo, Japan
Division of Ser. No. 36,890, Mar. 25, 1993. This application Apr. 12, 1996, Ser. No. 631,133
Claims priority, application Japan, Jan. 27, 1993, 5-001786; Jan. 28, 1993, 5-001901; Jan. 28, 1993, 5-001902; Jan. 29, 1993, 5-002051
Int. Cl.⁶ A61B *1/04*
U.S. Cl. 600—121 **6 Claims**

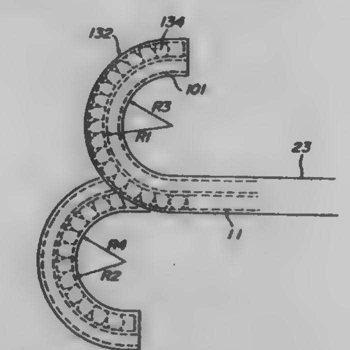

1. An endoscope system comprising:
an endoscope having an insertion section for inserting into a cavity under inspection and an operation section to which a proximal end of the insertion section is connected; and
a protection cover having an insertion section cover for covering said insertion section of the endoscope and conduit channels extending within said insertion section cover, wherein said endoscope comprises a bending portion which has a first radius of curvature of bending movement in a first direction, which is opposite to a second direction in which said conduit channels are arranged viewed in a radial direction of said endoscope, said first radius of curvature being smaller than a second radius of curvature of bending movement of the bending portion in said second direction, wherein when the insertion section and the insertion section cover are assembled together, the resultant assembly has a radius of curvature in said first direction which is substantially equal to the radius of curvature of the resultant assembly in said second direction.

5,702,348
DISPOSABLE ENDOSCOPIC SHEATH SUPPORT AND POSITIONING ASSEMBLY
E. Paul Harhen, Duxbury, Mass., assignor to Vision-Sciences, Inc., Natick, Mass.
Filed Jul. 24, 1996, Ser. No. 685,704
Int. Cl.⁶ A61B *1/04*
U.S. Cl. 600—124 **20 Claims**

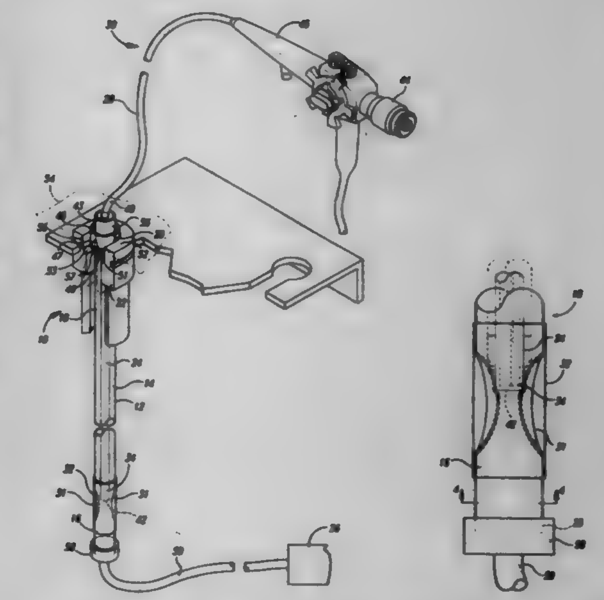

1. A sheath support assembly for use with an endoscopic sheath, the sheath having first proximal and distal ends, the support assembly being releasably connectable to a vacuum source, comprising:
a support tube having an interior area extending between second proximal and distal ends, the interior area being sized to contain a portion of the sheath therein, the support tube being connectable to the vacuum source to create a partial vacuum in the support tube, the partial vacuum being sufficient to expand the portion of the sheath in the interior area to an expanded position; and
a sheath engaging member attached to the support tube adjacent the distal end of the sheath when a sheath is inserted in the support tube, the sheath engaging member being movable by the partial vacuum between a released position and a retaining position, the sheath engaging member being moved from the released position to the retaining position when the partial vacuum is generated to retain the distal end of the sheath in a substantially fixed position relative to the support tube.

5,702,349
ENDOSCOPE WITH ACUTELY ANGLED HANDLE AND ASSOCIATED FOCUS ADJUSTMENT MECHANISM
Masaaki Morizumi, Omiya, Japan, assignor to Fuji Photo Optical Co., Ltd., Saitama, Japan
Filed Jun. 2, 1995, Ser. No. 458,768
Claims priority, application Japan, Jul. 7, 1994, 6-156043
Int. Cl.⁶ A61B *1/00*
U.S. Cl. 600—131 **9 Claims**

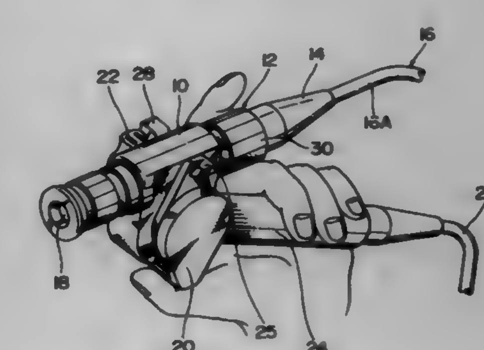

1. An endoscope, comprising:
a body section;
a rotatable operating section having a longitudinal axis, a first end mounted to the body section and a second end;
an insertion element comprising an insertion cable, a wire extending through the insertion cable and a lens system connected to the wire and mounted in a distal end of the insertion cable, the insertion element mounted at a proximal end to the rotatable operating section and extending from the second end thereof;
a grip section having a longitudinal axis and mounted to the body section and extending toward the insertion element such that the longitudinal axis of the rotatable operating section and the longitudinal axis of the grip section intersect at an acute angle; and
focus adjustment means in the rotatable operating section for translating a rotation of the rotatable operating section into a longitudinal movement of the wire, wherein the rotatable

operating section is disposed adjacent to an intersection between the body section and the grip member.

5,702,350
ADAPTER FOR CONNECTING A STEREOSCOPIC ENDOSCOPE TO ELECTRONIC DOCUMENTATION DEVICES

Uwe Vry, Aalen; Ottmar Sager, Heidenheim; Fritz Strähle, Heubach-Lautern, and Martin Poxleitner, Königsbronn, all of Germany, assignors to Carl-Zeiss-Stiftung, Heidenheim, Germany

Continuation of Ser. No. 184,678, Jan. 21, 1994, abandoned, which is a continuation-in-part of Ser. No. 100,276, Aug. 2, 1993, abandoned. This application Sep. 20, 1995, Ser. No. 531,333

Claims priority, application Germany, Aug. 1, 1992, 42 25 507.4; Jan. 21, 1993, 43 01 466.6; Jun. 9, 1993, 9308618 U

Int. Cl.⁶ A61B *1/00*

U.S. Cl. 600—166 **13 Claims**

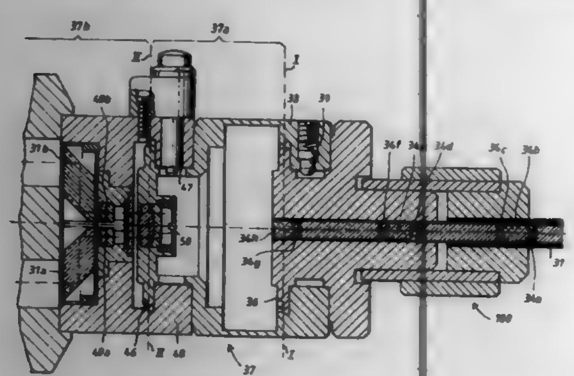

1. A stereoscopic endoscope for transmitting an intermediate image of an object, the stereoscopic endoscope comprising:
two electronic documentation devices for receiving said intermediate image;
a stereoscopic endoscope optical system defining an optical axis;
said stereoscopic endoscope optical system including common optical stereoscopic means mounted along and on said axis for transmitting unseparated intertwined stereo beam paths from the object in the direction of said axis and for providing said intermediate image;
said stereoscopic endoscope optical system further including an objective downstream of said common optical stereoscopic means for imaging said intermediate image at infinity along said unseparated intertwined stereo beam paths;
said objective having a clear diameter;
an adapter for connecting said stereoscopic endoscopic optical system to said electronic documentation devices;
said adapter having a first end facing toward said objective and a second end facing toward said electronic documentation devices;
said adapter including optical separating means between said first and second ends for completely separating said intertwined stereo beam paths from each other within said adapter and for transmitting the separated stereo beam paths to respective ones of said electronic documentation devices;
a releasable connector for connecting said first end of said adapter to said stereoscopic endoscope optical system at a location along said optical axis in front of said optical separating means where said stereo beam paths entering said adapter are and remain intertwined and unseparated;
said optical separating means being mounted in a fixed geometrical relationship with respect to said electronic documentation devices within said adapter;
two component objectives arranged in corresponding ones of said two beam paths downstream of said optical separating means when viewed in the direction of said beam paths from the object;
said two component objectives defining respective optical axes separated from each other by a spacing greater than said clear diameter; and,
at least one deflecting element disposed in one of said beam paths downstream of the corresponding component objective so as to permit the light transmitted along said beam paths to impinge upon said documentation devices.

5,702,351
LARYNGOSCOPE AND DISPOSABLE BLADE THEREFOR

David Bar-Or, 900 E. Oxford La., Englewood, Colo. 80110; James S. Kimmel, 2566 E. Geddes Pl., Littleton, Colo. 80122, and Francis A. Roth, 10945 W. 66th Ave., Arvada, Colo. 80004

Filed Nov. 15, 1995, Ser. No. 559,427

Int. Cl.⁶ A61B *1/26*

U.S. Cl. 600—190 **22 Claims**

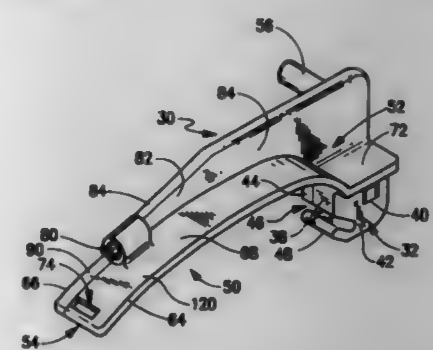

1. A laryngoscope blade adapted for connection to a handle and a vacuum source for insertion into the throat of a patient and operative to facilitate endotracheal intubation of the patient, comprising:
(a) a base portion sized and configured for attachment to a handle; and
(b) an elongated blade portion having a proximal end connected to said base portion and projecting in a longitudinal direction therefrom to terminate in a distal tip, said blade portion having a passageway formed therein with said blade portion including an upper wall and a lower wall that are flat in a direction transverse to the longitudinal direction and that are in generally parallel spaced relationship to one another, said upper wall and said lower wall joined together along lateral side edges thereof to form a section of the passageway that is generally rectangular in cross-section, an inlet port in fluid communication with said passageway and located proximately to the distal tip and an outlet port in fluid communication with said passageway and located proximately to the proximal end, said outlet portion including a connector structure configured to connect to a vacuum source whereby suction may be provided at the distal tip to remove fluids from the patient through said blade portion.

5,702,352
TOOLS AND METHOD FOR MANIPULATING ORGANS IN HUMAN BODY

Shuichi Kimura, Hino, and Tsuyoshi Tsukagoshi, Fuchu, both of Japan, assignors to Olympus Optical Co., Ltd., Tokyo, Japan

Filed Sep. 15, 1995, Ser. No. 528,954

Claims priority, application Japan, Sep. 26, 1994, 6-229293; Jun. 14, 1995, 7-147391

Int. Cl.⁶ A61B *17/00*

U.S. Cl. 600—201 **28 Claims**

1. A tool for manipulating tissue comprising:

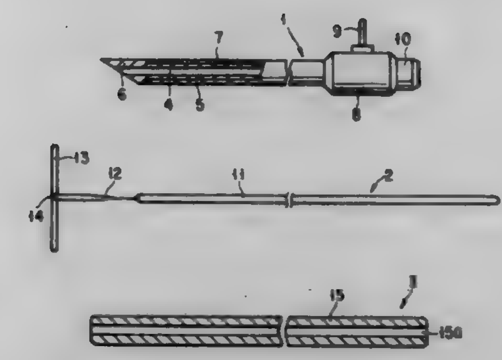

a penetration needle having a hollow portion, said penetration needle being adapted to be stuck into a body cavity of a patient;
a pulling member insertable into the hollow portion of the penetration needle so as to be positioned in the body cavity of the patient, said pulling member comprising:
a rigid manipulating rod formed in a substantially straight line shape; and
a stopper member pivotally connected to a front end of said manipulating rod, said stopper member being movable between positions that are aligned with or transverse to said straight line shape;
said pulling member being adapted to pull tissue in the body cavity; and
a manipulator having a hollow portion through which the pulling member can be passed, said manipulator being adapted to be guided over said manipulating rod to be inserted into the body cavity of the patient after the penetration needle is removed therefrom, while said stopper member is left in the body cavity,
wherein said manipulator is adapted to be positionally fixed relative to the pulling member and to be operable together with said pulling member to move the pulled tissue in a desired direction and to hold the pulled tissue at a desired position.

5,702,353
HYDROMASSAGE BATHTUB WITH WIDE-BEAM ULTRASOUND EMISSION DEVICES

Virgilio Guzzini, Recanati; Enrico Montangero, Milan, and Roberto Onori, Fermo, all of Italy, assignors to Teuco Guzzini S.r.L., Italy

Filed Apr. 8, 1996, Ser. No. 630,971

Claims priority, application Italy, Apr. 14, 1995, MI95A0778

Int. Cl.⁶ A61H *1/00*

U.S. Cl. 601—2 **15 Claims**

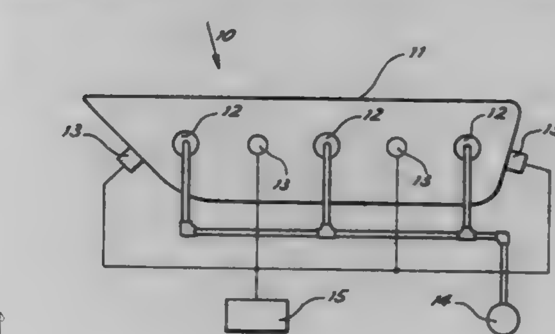

1. A hydromassage bathtub with an ultrasonic micromassage system comprising a plurality of ultrasound emitting devices distributed over the wall of the bathtub, and wherein each of the ultrasound emitting devices comprises orienting means for producing an ultrasonic beam which is at least 10 cm. wide at a distance of 20 cm. from the bathtub wall.

5,702,354
TOE JOINT MOBILIZATION APPARATUS

Julianne M. DeSpain, Westminster, Colo.; Lawrence D. Oleff, Los Altos, and Theodore W. Rogers, Palo Alto, both of Calif., assignors to Active Motion Systems, LLC, Palo Alto, Calif.

Continuation-in-part of Ser. No. 161,118, Dec. 2, 1993, abandoned. This application Sep. 18, 1995, Ser. No. 529,630

Int. Cl.⁶ A61H *1/00*

U.S. Cl. 601—27 **24 Claims**

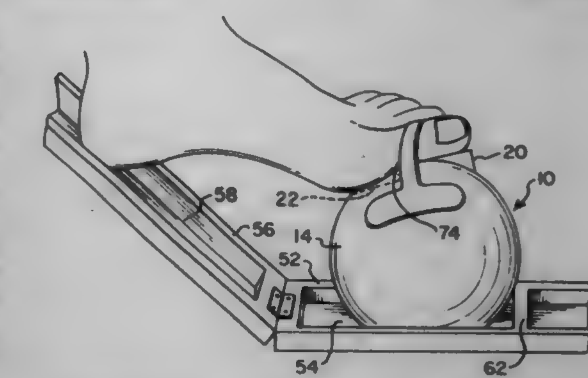

22. An apparatus for mobilizing a metatarsophalangeal (MTP) joint of a human foot, comprising:
a member having a first curved surface for facilitating the rolling of said member along a selected axis, and a second surface adapted to receive the plantar portion of a human foot including at least a portion of the ball of the foot and at least one toe;
a retainer attachable to said member for securing a single to-be-treated toe to said second surface;
a track adapted to receive said curved surface of said member for guiding said member to ensure that said member moves along said axis, said track having a first end and a second end; and
an elongated heel guide having a first end and a second end, said second end of said elongated heel guide attached at an angle to said first end of said track said heel guide having a longitudinal groove formed therein for receiving and guiding the heel of the foot of a user as said member is rolled in a backward direction; whereby, as said member is rolled in a forward direction along said selected axis, the secured to-be-treated single toe is pulled downward due to the curvature of said first and second surfaces of said member to thereby impart plantarflexion motion to the MTP joint of the secured to-be-treated single toe, and as said member is rolled in a backward direction the secured to-be-treated single toe is pushed upward due to the curvature of said first and second surfaces of said member to impart dorsiflexion motion to the MTP joint of the secured single toe.

5,702,355
PORTABLE ADJUSTABLE TRACTION APPLIANCE TO TREAT CARPAL TUNNEL SYNDROME AND OTHER PROBLEMS OF THE WRIST

Ronald M. Repice, 640 Georgetown Rd.; Ronald M. Repice, II, 299 Stanton Ct., both of Glen Mills, Pa. 19342, and Harold E. Clupper, West Chester, Pa., assignors to Ronald M. Repice, and Ronald M. Repice, II, both of Glen Mills, Pa.

Filed Jan. 14, 1997, Ser. No. 783,632

Int. Cl.⁶ A61F *5/04*

U.S. Cl. 602—21 **28 Claims**

1. A portable appliance for treating carpal tunnel syndrome and/or other problems of the wrist of a person, the person having a

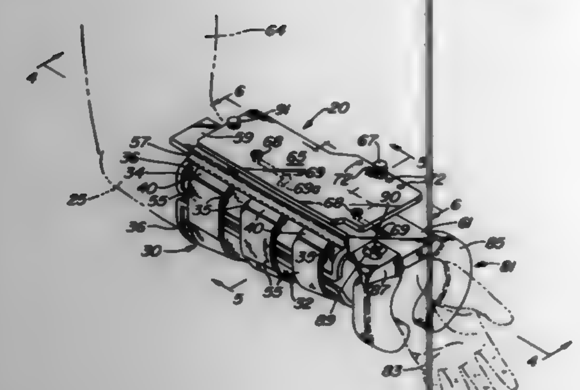

forearm and a hand which are joined at the wrist, the forearm having a longitudinal axis, said appliance comprising:
- a. releasably securable sleeve means arranged for releasable securement to the forearm of the person;
- b. a stationary member fixedly positioned on said sleeve means;
- c. a moveable member having an end portion and being slidably coupled to said stationary member for linear movement along a path parallel to the longitudinal axis;
- d. cuff means secured to the end portion of said moveable member and being arranged to securely engage a portion of the person's hand adjacent the person's wrist;
- e. bias means coupled between said stationary member and said moveable member, said bias means being provided for urging said moveable member to slide from a retracted position wherein said cuff means is located closer to said sleeve means to an extended position, wherein said cuff means is located further from said sleeve means to cause said cuff means to securely engage a portion of the person's hand adjacent the person's wrist, whereupon a predetermined tensile load is applied to the person's wrist in a direction parallel to the longitudinal axis of the forearm; and,
- f. latching means coupled between said stationary member and said moveable member for retaining said moveable member in said retracted position.

5,702,356
DISPOSABLE WOUND DRESSING PERMITTING NON-INVASIVE EXAMINATION
Johnnie L. Hathman, 5020 Shenandoah Ave., Los Angeles, Calif. 90056
PCT No. PCT/US93/12577, § 371 Date May 17, 1996, § 102(e) Date May 17, 1996, PCT Pub. No. WO95/17146, PCT Pub. Date Jun. 29, 1995
PCT Filed Dec. 23, 1993, Ser. No. 648,024
Int. Cl.^{6} A61F *5/00*
U.S. Cl. 602—41 **8 Claims**

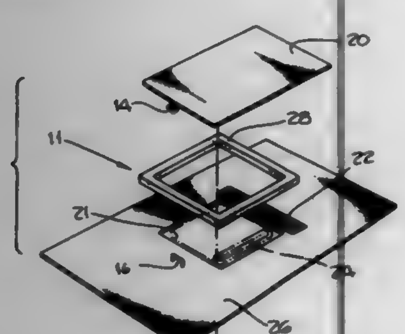

1. A disposable wound dressing permitting non-invasive examination of and access to a wound under treatment, comprising;
- an epidermal adhesive tape strip base member for adhering the dressing to the skin of a user of the dressing, said epidermal adhesive tape strip base member having a wound circumscribing aperture;
- a sealing cover member;
- a stepped standoff member adhesively secured to said epidermal adhesive tape strip base member and in circumscribing registry with said wound circumscribing member and interposed between said epidermal adhesive tape strip base member and said sealing cover member, said stepped standoff member comprising:
- a first stepped member; and
- a second stepped member;
- a top circumscribing member adhesively secured to said sealing cover member and so disposed as to fit about said first stepped member of said stepped standoff member and in abutment registry with said second stepped member of said stepped standoff member;
- means for securing said sealing cover member at one end to said epidermal adhesive tape strip base member; and
- means for sealably closing said sealing cover member to said epidermal adhesive tape strip base member so as to maintain and secure said top circumscribing member about said first stepped member of said stepped standoff member and in abutment registry with said second stepped member of said stepped standoff member and so as to cover said wound circumscribing aperture.

5,702,357
EXTRACORPOREAL BLOOD PROCESSING METHODS AND APPARATUS
Marlene Adele Bainbridge, Littleton, and Brian M. Holmes, Evergreen, both of Colo., assignors to Cobe Laboratories, Inc., Arvada, Colo.
Filed Jun. 7, 1995, Ser. No. 480,617
Int. Cl.^{6} A01M *37/00*
U.S. Cl. 604—4 **14 Claims**

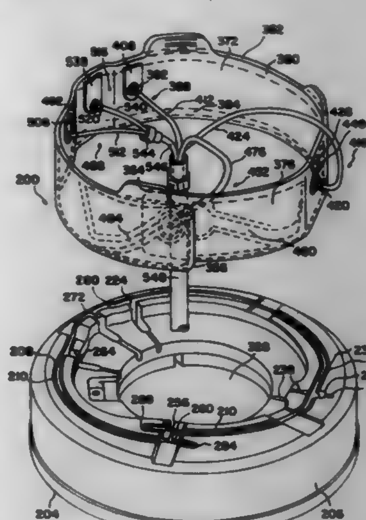

1. A blood primable blood processing channel assembly for an apheresis system comprising a centrifuge rotor, said channel assembly comprising:
- a channel housing interconnectable with said centrifuge rotor and comprising a blood processing channel, said channel comprising a first cell separation stage and wherein a remainder of said channel comprises at least one other stage, said channel further comprising a blood inlet and a red blood cell outlet fluidly interconnected with said first cell separation stage, wherein blood provided to said channel through said blood inlet has a first hematocrit and a fluid containing red blood cells removed from said channel through said red blood cell outlet has a second hematocrit, wherein a ratio of a volume of said remainder of said channel to a volume of said first cell separation stage is less than one-half of one less than a ratio of the second hematocrit to the first hematocrit.

5,702,358
CARDIOPLEGIA DELIVERY APPARATUS AND METHOD OF USE
Leland Witherspoon, Chino Hills; Gerald D. Buckberg, Los Angeles, and Paul Akopian, Glendale, all of Calif., assignors to Sorin Biomedical Inc., Irvine, Calif.
Filed Feb. 23, 1995, Ser. No. 393,317
Int. Cl.^{6} A61M *35/00*
U.S. Cl. 604—4 **9 Claims**

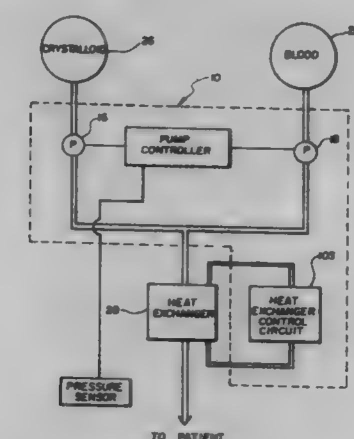

1. A variable ratio delivery device for delivering blood from a blood source and cardioplegia solution from a cardioplegia solution source, the blood and cardioplegia solution being combined in a selected ratio for delivery to a patient, the device comprising:
- a first pump having an inlet connected to the cardioplegia solution source to cause cardioplegia solution to flow through the first pump and having an outlet connected to a cardioplegia solution supply line;
- a second pump having an inlet connected to the blood source to cause blood to flow through the second pump and having an outlet connected to a blood supply line;
- a delivery line connected to receive cardioplegia solution from the cardioplegia solution supply line and blood from the blood supply line; and
- a pump controller for adjusting the rate of flow of cardioplegia solution through the first pump and the rate of flow of blood through the second pump until the selected ratio of blood and cardioplegia solution is supplied to the delivery line.

5,702,359
NEEDLE ELECTRODES FOR MEDIATED DELIVERY OF DRUGS AND GENES
Gunter A. Hofmann, San Diego, Calif.; Richard A. Gilbert, Tampa, Fla.; Yasuhiko Hayakawa, Ichikawa, Japan; Richard Heller, Brandon, and Mark J. Jaroszeski, Tampa, both of Fla., assignors to Genetronics, Inc., San Diego, Calif.
Continuation-in-part of Ser. No. 42,039, Apr. 1, 1993, Pat. No. 5,439,440. This application Jun. 6, 1995, Ser. No. 467,566
Int. Cl.^{6} A61N *1/30*
U.S. Cl. 604—20 **18 Claims**

1. An electrode apparatus for the application of electric fields to a selected portion of a living body, comprising:
- support means;
- an array of multiple opposed pairs of electrodes mounted on said support means in spaced relation to one another, at least one of said pairs of electrodes having a needle configuration for penetrating tissue for in vivo electroporation of cells of the tissue; and

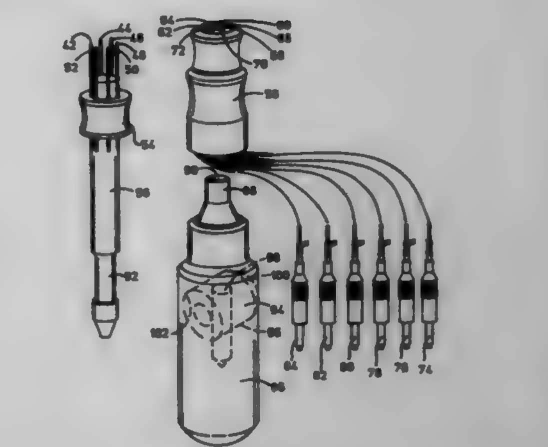

- an electric pulse generator for applying pulses of high amplitude electric signals to selected opposed pairs of said electrodes proportionate to the distance between said electrodes for electroporation of cells between said electrodes.

5,702,360
ULTRASONIC SURGICAL KNIFE
Francis Dieras, Bordeaux, and Jean-Luc Billard, Tresses, both of France, assignors to Satelec S.A., Merignac, France
PCT No. PCT/FR94/00853, § 371 Date Jan. 3, 1996, § 102(e) Date Jan. 3, 1996, PCT Pub. No. WO95/01754, PCT Pub. Date Jan. 19, 1995
PCT Filed Jul. 8, 1994, Ser. No. 571,989
Claims priority, application France, Jul. 8, 1993, 93 08419
Int. Cl.^{6} A61B *17/32*
U.S. Cl. 604—22 **8 Claims**

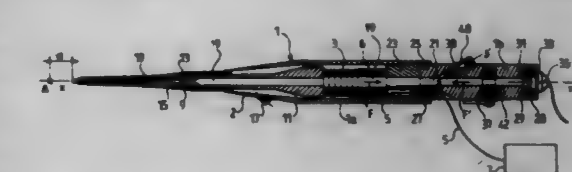

1. Surgical instrument having a forward portion, a rearward portion, and comprising ultrasonic generator means adapted to subject a sonotrode, disposed at a forward end of said surgical instrument, to an ultrasonic vibratory movement, the surgical instrument being traversed by at least one axial suction channel connecting the forward portion to the rearward portion, means for guiding laser radiation to a forward end of the sonotrode, focusing means for directing said laser radiation through the axial suction channel, and for focusing said laser radiation at a focal point located in front of the forward end of the sonotrode, and a secondary suction channel opening in the axial suction channel, adjacent said focusing means and creating a suction flow (F), and means for supplying a gaseous flow in the axial suction channel, which opens into said axial suction channel intermediate the secondary suction channel and the focusing means, and which creates a gas flow (F') opposite the flow of suction.

5,702,361
METHOD FOR EMBOLIZING BLOOD VESSELS
Scott Evans, Santa Ana, Calif.; John Perl, II, Cleveland Heights, Ohio, and Richard Greff, St. Petersburg, Fla., assignors to Micro Therapeutics, Inc., San Clemente, Calif.
Filed Jan. 31, 1996, Ser. No. 594,574
Int. Cl.^{6} A61M *1/00*
U.S. Cl. 604—53 **16 Claims**

1. A method for embolizing a vascular site in a patient's blood vessel which method comprises

(a) introducing, via a catheter, at the vascular site to be embolized a non-particulate agent or a plurality of said agents;
(b) delivering, via a catheter, to said vascular site a polymer composition comprising a biocompatible polymer, a biocompatible solvent and a contrast agent

wherein said delivery is conducted under conditions wherein a polymer precipitate forms in situ at said vascular site thereby embolizing the blood vessel and further wherein said non-particulate agent is encapsulated within said precipitate.

5,702,362
NASAL APPLICATOR

Heiko Herold, Neuss; Axel Wollenschläger, Bergisch Gladbach, and Alfred von Schuckmann, Kevelaer, all of Germany, assignors to Bayer Aktiengesellschaft, Leverkusen, Germany

Filed May 21, 1996, Ser. No. 646,828

Claims priority, application Germany, May 26, 1995, 195 18 810.1

Int. Cl.⁶ A61M *13/00*

U.S. Cl. 604—58 **8 Claims**

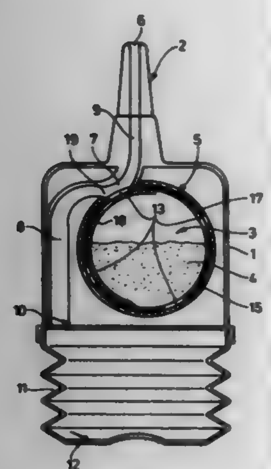

1. A powdered medication inhaler comprising a manually actuated air source, an inflow channel (8) having two ends, an outflow channel (9) having two ends and a metering channel (7) having two ends, said manually actuated air source being connected to one end of said inflow channel (8), one end of said metering channel (7) being connected to the other end of said inflow channel (8) and the other end of metering channel (7) being connected to one end of said outflow channel (9), the other end of outflow channel (9) comprising an opening for discharging powder out of the inhaler; a metering drum (5), the interior of which comprises a powder storage container (3) and having portioning chambers (13) for metering predetermined quantities of powder from said powder storage container (3) to said metering channel (7) whereby, in operation, the rotation of metering drum (5) causes portioning chamber (13) to remove a predetermined quantity of powder from powder storage container (3) and place it in metering channel (7), and air introduced into inflow channel (8) by said manually actuated air source flows from inflow channel (8) into metering channel (7), entrains said predetermined quantity of powder placed in metering channel (7) by said portioning chamber (13), and carries it through outflow channel (9) and out of the inhaler.

5,702,363
SEPTUMLESS IMPLANTABLE TREATMENT MATERIAL DEVICE

J. Christopher Flaherty, 242 Ipswich Rd., Topsfield, Mass. 01983

Filed Jun. 7, 1995, Ser. No. 475,773

Int. Cl.⁶ A61M *11/00*

U.S. Cl. 604—93 **18 Claims**

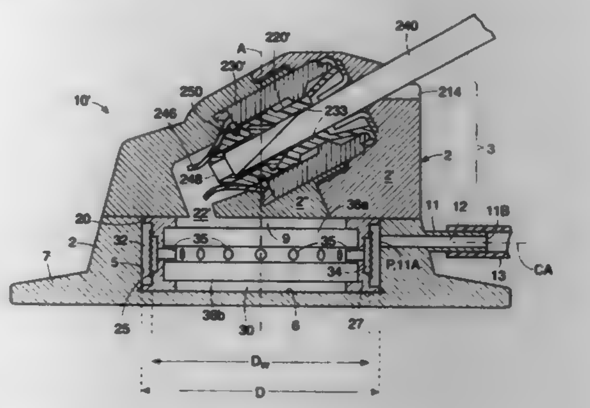

1. An implantable access device comprising:
A. a biocompatible housing having at least one entry port and at least one aperture with a passageway extending therebetween, said entry port being adapted to receive a filament for passage into said passageway, said housing further including and disposed in said passageway a valve assembly comprising a valve and a sealing element, said valve assembly adapted to be activated by said filament after passage of said filament through said entry port whereupon a seal, independent of activation of said valve, is created by said sealing element about said filament before said valve opens to allow access through said passageway, said aperture communicating with an internal substantially cylindrical reservoir in the housing, said reservoir being defined by a lateral surface extending about a central axis and a bottom surface;
B. an outlet extending through said housing along an outlet channel axis from a point on said lateral surface of said reservoir, and
C. a filter assembly disposed in said reservoir, said filter assembly including a substantially cylindrical fluid permeable first wall interior to and spaced apart from said lateral surface of said reservoir, said first wall establishing a first annular chamber between said first wall and said lateral surface and a first reservoir chamber interior to said first wall, said first annular chamber and said first reservoir chamber being in fluid communication only through said first wall, and said outlet being in direct fluid communication with said first annular chamber.

5,702,364
FIXED-WIRE DILATATION BALLOON CATHETER

Charles L. Euteneuer, 1951 Lander Ave. NE., St. Michael, Minn. 55376; Richard C. Mattison, 6417 Elm St., Corcoran, Minn. 55340; Daniel O. Adams, 2459 Cloud Dr., Blaine, Minn. 55434; Thomas R. Hektner, 2401 Byrnes Rd., Minnetonka, Minn. 55343, and Peter T. Keith, 4701 Dunberry La., Edina, Minn. 55435

Continuation of Ser. No. 433,711, Nov. 13, 1989, abandoned, which is a continuation-in-part of Ser. No. 162,004, Feb. 29, 1988, Pat. No. 4,943,278. This application Nov. 22, 1991, Ser. No. 796,901

Int. Cl.⁶ A61M *29/00*

U.S. Cl. 604—96 **27 Claims**

1. A catheter for use in angioplasty, the catheter comprising:
an elongate flexible tubular member having an interior passage extending from a proximal end to a distal end;

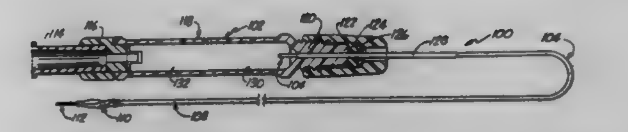

a core member having a smaller outer diameter than the tubular member and having a proximal end and a distal end, the core member having its proximal end bonded to the tubular member at a first bonding region adjacent the distal end of the tubular member, with the core member extending distally beyond the distal end of the tubular member;
an elongate flexible waist tube sealably connected to the tubular member at a second bonding region spaced proximally from the first bonding region, the waist tube extending distally beyond the distal end of the tubular member about the core member to define a distal interior passage in fluid communication with the interior passage of the tubular member, with the distal end of the waist tube terminating proximally of the distal end of the core member; and
an inflatable balloon member having a proximal end sealably connected to the distal end of the waist tube and having a distal end sealably connected to the core member, with the balloon member extending around a portion of the core member and having an interior in fluid communication with the distal interior passage of the waist tube.

5,702,365
DAUL-LUMEN CATHETER

Toby St. John King, 28B Cavendish Avenue, Cambridge CB1 4US, United Kingdom

Continuation of Ser. No. 387,810, Feb. 27, 1995, abandoned. This application Jul. 3, 1996, Ser. No. 674,964

Claims priority, application United Kingdom, Sep. 8, 1992, 9218994

Int. Cl.⁶ A61M *25/00*

U.S. Cl. 604—105 **12 Claims**

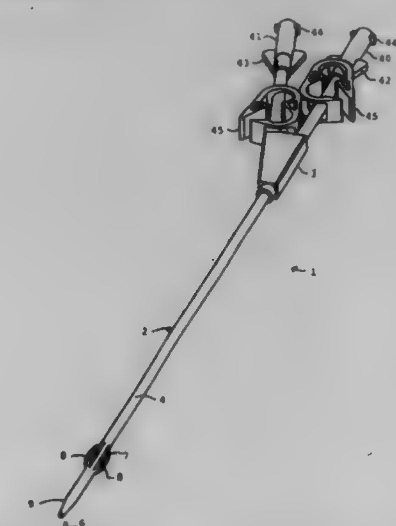

1. A blood treatment catheter for insertion into a blood vessel of a patient comprising:
an inner tube defining a lumen therewithin, an outer tube disposed in surrounding spaced relationship to said inner tube to define an annular channel between said inner and outer tubes for blood flow therethrough, each of said tubes including a proximal end for connection to blood treatment apparatus and a distal end for insertion into a blood vessel, said distal ends of said inner and outer tubes being directly connected in fixed coaxial relationship to one another to form a tapered tip portion, said inner tube being open at the distal end thereof for permitting blood to flow in a first axial direction from said proximal end of the inner tube through said lumen and out through the open distal end of said inner tube, said outer tube including a flexible expandable portion immediately adjacent to said tip portion at the distal end of the outer tube, means connected to said inner and outer tubes adjacent said proximal end for expanding said expandable portion of the outer tube to prevent collapse of a surrounding blood vessel when the inner tube is moved axially relative to said outer tube towards said proximal end, said expandable portion when in expanded position providing opening means through said outer tube, said opening means including an outer end portion proximate the distal end of said outer tube and an inner end portion spaced from said outer end portion in a direction toward the proximal end of said outer tube, said opening means permitting blood to flow through said opening means into the annular channel between said inner and outer tubes in a direction opposite to said first direction and towards said proximal end of the outer tube, and said tapered tip portion including means for blocking said annular channel adjacent said outer end portion of said opening means for preventing infection or clotting of blood.

5,702,366
SAFETY FLUID COLLECTOR

Edward Lichtenberg, 2401 Pennsylvania Ave., Apt. 18 B27, Philadelphia, Pa. 19130

Filed Jan. 3, 1997, Ser. No. 775,950

Int. Cl.⁶ A61M *5/00*

U.S. Cl. 604—110 **17 Claims**

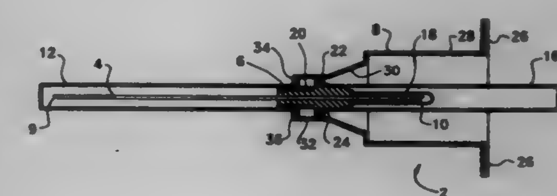

1. A body fluid collector system comprising:
(a) a needle holder with a needle;
(b) a cylinder;
(c) an O-ring seated within said cylinder and in contact with said needle holder to frictionally hold said needle holder, with said needle, in place when the fluid is extracted from the body;
(d) a bushing slidingly fitted onto said needle holder;
(e) means for releasing the frictional hold on said needle holder by said O-ring; and
(f) a discard container for temporary storage of, and disposal of used needles.

5,702,367
RETRACTABLE-NEEDLE CANNULA INSERTION SET WITH REFINEMENTS TO BETTER CONTROL LEAKAGE, RETRACTION SPEED, AND REUSE

Walter E. Cover, Mission Viejo, and Alan A. Davidner, Claremont, both of Calif., assignors to Becton Dickinson and Company, Franklin Lakes, N.J.

Continuation of Ser. No. 422,662, Apr. 10, 1995, Pat. No. 5,575,777, which is a continuation of Ser. No. 152,401, Nov. 15, 1993, abandoned. This application Jul. 29, 1996, Ser. No. 681,644

Int. Cl.⁶ A61M *5/50*

U.S. Cl. 604—110 **5 Claims**

1. An introducer needle assembly, comprising:
a hollow needle having a proximal end and a sharp distal end;
a hollow handle having a proximal end and a distal end;

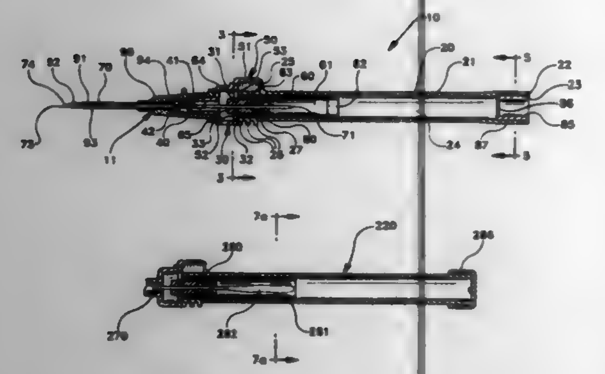

a needle hub connected to the proximal end of the hollow needle and slidably disposed in the hollow handle;
a spring operably connected to the needle hub;
a latch operably engaging the needle hub selectively to maintain the needle hub adjacent to the distal end of the hollow handle against the bias of the spring; and
a flashback chamber fixedly connected to the hollow handle so the needle and the needle hub are movable with respect to the flashback chamber and the flashback chamber is in fluid communication with the hollow needle for receiving blood from within the hollow needle and wherein the flashback chamber does not move with respect to the hollow handle when the needle hub is moved proximally in the hollow handle.

5,702,368
SYSTEM FOR CARDIAC PROCEDURES
John H. Stevens, Palo Alto; Wesley D. Sterman, San Francisco; Hanson S. Gifford, III, Woodside, and Timothy R. Machold, Moss Beach, all of Calif., assignors to Heartport, Inc., Redwood City, Calif.
Division of Ser. No. 282,192, Jul. 28, 1994, Pat. No. 5,584,803, which is a continuation-in-part of Ser. No. 162,742, Dec. 3, 1993, abandoned, which is a continuation-in-part of Ser. No. 123,411, Sep. 17, 1993, abandoned, which is a continuation-in-part of Ser. No. 991,188, Dec. 15, 1992, abandoned, which is a continuation-in-part of Ser. No. 730,559, Jul. 16, 1991, Pat. No. 5,370,685. This application May 30, 1995, Ser. No. 453,333
Int. Cl.⁶ A61M *5/00;37/00*
U.S. Cl. 604—171 **8 Claims**

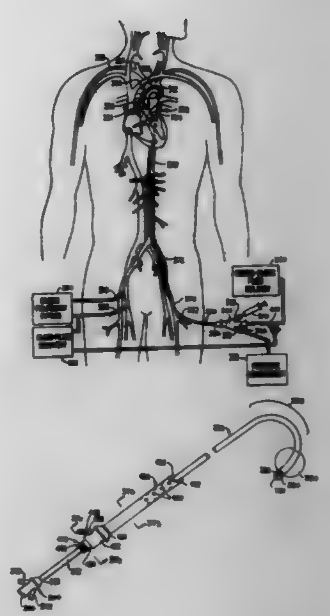

1. In an endovascular system comprising: an occluding member for partitioning a patient's ascending aorta between the coronary ostia and the brachiocephalic artery, a lumen coupled to a source of cardioplegic fluid for infusing cardioplegic fluid into the patient's ascending aorta, a blood flow lumen, and an outflow port at a distal end in fluid communication with the blood flow lumen for infusing oxygenated blood into the patient's arterial system, the blood flow lumen being coupled to a source of oxygenated blood, the lumen and occluding member being slidably and separably coupled to the blood flow lumen so that the lumen and occluding member may be removed and replaced when the outflow port is positioned in a patient's artery, the lumen being carried by a catheter and the blood flow lumen being carried by a bypass cannula, the bypass cannula having a proximal end and a hemostasis valve, the distal end of the bypass cannula being configured for introduction into an artery of a patient, the catheter passing through the hemostasis valve and the blood flow lumen and being slidably and separably coupled to the bypass cannula, the catheter having a distal end, a proximal end, and an outlet fluidly coupled to the inner lumen, the occluding member being positioned proximal to the outlet.

5,702,369
EXTENDABLE DEVICE FOR ENCLOSING CUTTING SURFACES OF SURGICAL INSTRUMENTS
Steven Frank Mercereau, 4911 W. Lake Dr., Conyers, Ga. 30208
Filed Jun. 6, 1995, Ser. No. 469,075
Int. Cl.⁶ A61M *5/32;5/00*
U.S. Cl. 604—192 **6 Claims**

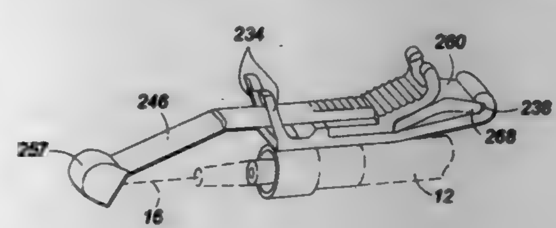

1. A sampling syringe with a closure device for capping a needle attached to the syringe, comprising:
an elongated barrel open on a first end and a needle attached by a hub at a second end for communication with the barrel;
a plunger rod with a plunger body attached at a first end slidably insertable into the open first end of the barrel;
a unitary closing device comprising:
a ring sized for being engaged to a tubular portion of the hub;
a lever hingedly attached to the ring;
a link member hingedly connected to the lever intermediate the ring and a distal end of the lever;
an arm connected by a flexible hinge to the link and having a dish-shaped cap member at a distal end,
the arm pivotable to a position in substantial parallel alignment with the needle whereby the cap member is outwardly of the tip of the needle and the cap member being brought into engagement with the tip of the needle by moving the lever towards the open end of the barrel.

5,702,370
SELF-SEALING GUIDEWIRE AND CATHETER INTRODUCER
John T. Sylvanowicz, Andover, and George W. Bourne, IV, N. Chelmsford, both of Mass., assignors to C. R. Bard, Inc., Murray Hill, N.J.
Continuation of Ser. No. 817,941, Jan. 2, 1992, Pat. No. 5,304,156, which is a continuation of Ser. No. 674,707, Mar. 25, 1991, abandoned, which is a continuation of Ser. No. 550,454, Jul. 10, 1990, abandoned, which is a continuation of Ser. No. 397,761, Aug. 23, 1989, abandoned, which is a continuation of Ser. No. 201,538, Jun. 2, 1988, abandoned. This application Apr. 18, 1994, Ser. No. 228,666
Int. Cl.⁶ A61M *5/00*
U.S. Cl. 604—256 **22 Claims**

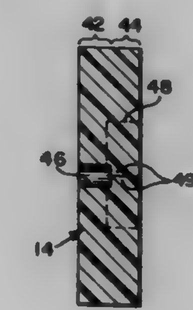

1. An introducer adapted to be inserted into a patient's blood vessel comprising:
a housing having an introducer sheath extending from an end of the housing, the sheath being adapted to be inserted into a patient's blood vessel, the housing having an opening at its other end;
a self-sealing, one piece gasket having a thickness and inwardly and outwardly facing surfaces, the gasket being mounted in the housing with at least part of its outwardly facing surface being exposed at the opening;
the gasket having a central aperture in its outwardly facing surface extending a predetermined depth into the gasket, the aperture being defined by a circumferential wall and bottom wall;
the inwardly facing surface of the gasket being formed with a plurality of radially extending slits, the depth of the slits being such that the slits extend into the bottom wall and the circumferential wall, the central region of the slits overlapping the central aperture, the depths of each of the aperture and the slits being less than the thickness of the gasket;
the central aperture and the slits being dimensioned to seal a wide range of diameters of devices including both guidewires and catheters extended through the aperture, the radius of the aperture being less than the radial length defined by the slits.

5,702,371
TUBE FITTING ANCHORING SYSTEM
Steven F. Bierman, Del Mar, Calif., assignor to Venetec International, Inc., Mission Viejo, Calif.
Continuation-in-part of Ser. No. 223,948, Apr. 6, 1994, Pat. No. 5,578,013, which is a continuation-in-part of Ser. No. 121,942, Sep. 15, 1993, Pat. No. 5,456,671, which is a continuation-in-part of Ser. No. 34,340, Mar. 19, 1993, Pat. No. 5,354,282, which is a continuation-in-part of Ser. No. 695,549, May 3, 1991, Pat. No. 5,314,411, which is a continuation-in-part of Ser. No. 518,964, May 4, 1990, Pat. No. 5,192,273, which is a continuation-in-part of Ser. No. 384,326, Jul. 24, 1989, abandoned. This application Apr. 27, 1995, Ser. No. 429,625
Int. Cl.⁶ A61M *5/32*
U.S. Cl. 604—180 **34 Claims**

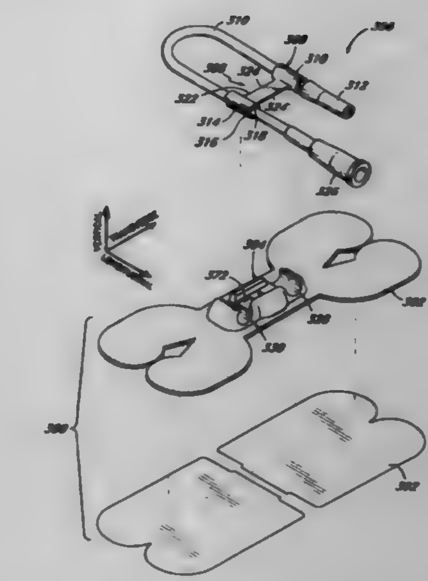

1. An anchoring device for securing a tube fitting to a patient, the tube fitting including at least first and second generally tubular segments interconnected by a transverse member, said anchoring system comprising a retainer which includes at least first and second channels, each channel being formed at least in part by two arcuate walls at least one of which deflects to receive one of the generally tubular segments of the tube fitting within said channel and returns to a generally undeflected state to hold the tube fitting tubular segment in said channel, and a transverse channel which intersects and extends through one of said walls of each of said channels, said transverse channel being configured to receive the transverse member of the tube fitting with said first and second channels receiving the first and second generally tubular segments of the tube fitting.

5,702,372
LINED INFUSION CATHETER
Timothy S. Nelson, Elk River, Minn., assignor to Medtronic, Inc., Minneapolis, Minn.
Filed Feb. 8, 1995, Ser. No. 385,498
Int. Cl.⁶ A61M *25/00*
U.S. Cl. 604—264 **15 Claims**

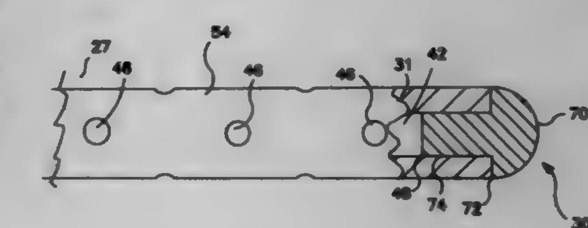

1. A catheter for delivering, to a selected site within an organism, agents, drugs or other fluids that exhibit some detrimental sensitivity to material used to make the catheter or that may diffuse through material used to make the catheter, the catheter comprising:
a jacket having a proximal and a distal end;
an inner liner forming a lumen, the inner liner having a proximal end and a distal end, the inner liner disposed inside the jacket and made of a material that is non-reactive with the agent, drug or fluid to be delivered through the inner liner, the proximal end of the inner liner adapted to be in fluid communication with a source of fluid;
a tip, attached to the distal end of and in fluid communication with the lumen of the inner liner, the tip made of the same material as the inner liner, the tip extending distally beyond the distal end of the jacket, the tip having at least one orifice

for delivering fluid from the lumen of the inner liner to outside the catheter at the distal end of the catheter through the orifice;

a radiographic marker attached to the distal end of the catheter, the radiographic marker comprising a semispherical portion with a cylindrical nipple emanating away therefrom, the cylindrical nipple being sized to fit snugly within the lumen and held in place by a biocompatible adhesive, the radiographic marker being made of a material opaque to x-rays;

whereby the jacket is isolated from fluid flowing in lumen, and whereby the fluid flowing through the lumen contacts only the material of the inner tubular lumen and tip as the fluid flows through the lumen and out the orifice.

5,702,373

COMPOSITE SUPER-ELASTIC ALLOY BRAID REINFORCED CATHETER

Gene Samson, Milpitas, Calif., assignor to Target Therapeutics, Inc., Fremont, Calif.

Filed Aug. 31, 1995, Ser. No. 521,671

Int. Cl.⁶ A61M *25/00*

U.S. Cl. 604—282 **20 Claims**

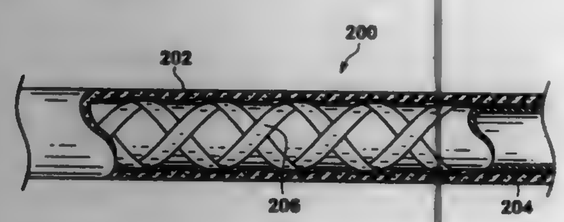

1. A catheter assembly comprising:

an elongate tubular member having a proximal end and a distal end and a passageway defining an inner lumen extending between those ends, comprising

a.) a relatively more flexible and more distal segment, comprising

i.) a braid member woven of a plurality of ribbons, at least a majority of which ribbons comprise a superelastic alloy, and having inner and outer surfaces,

ii.) at least one inner lining member interior to said braid member, and

iii.) at least one outer covering member exterior to said braid member wherein the relatively more distal segment has a critical bend diameter of no more than 3.0 mm, and

b.) a relatively more rigid and more proximal tubular segment comprising a comparatively high flexural modulus material.

5,702,374

MALE LUER CONNECTOR ASSEMBLY

Robert H. Johnson, Fountain Green, Utah, assignor to Abbott Laboratories, Abbott Park, Ill.

Filed Nov. 14, 1995, Ser. No. 557,214

Int. Cl.⁶ A61M *25/00*

U.S. Cl. 604—283 **5 Claims**

1. An improved male luer connector assembly comprising:

an elongated male luer connector having a fluid path extending therethrough;

a locking ring having a proximal face, said locking ring being disposed on said male luer connector near the proximal end thereof; and

a lock nut rotatably mounted on said male luer connector and overlying said ring, said lock nut having threads along the interior surface thereof for engaging complementary threads on a female luer connector, said ring having a plurality of teeth on said proximal face, and said lock nut including a ratchet on an inner distal face thereof for engaging said plurality of teeth of said ring.

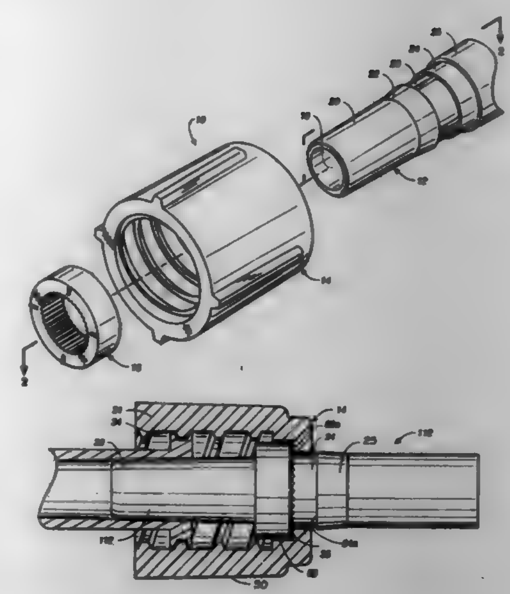

whereby to enable the connection of said male luer connector assembly to the complementary threaded female luer connector,, said male luer connector is inserted into the threaded female luer connector, the threads of said lock nut engage the complementary threads of the female luer connector and the lock nut is rotated to drive the male luer connector into the female luer connector, while drawing the engaging teeth on the proximal face of the ring into engagement with the ratchet on the inner face of the lock nut, to assure a locking fluid-tight connection between said male luer connector assembly and the female luer connector.

5,702,375

ABSORBENT PAD AND THERMAL PACK

Stephen P. Angelillo, 2922 Cocovia Way, Leesburg, Fla. 32749, and Richard E. Sweeting, Ocala, Fla., assignors to Stephen P. Angelillo

Continuation of Ser. No. 254,490, Jun. 6, 1994, abandoned, which is a continuation of Ser. No. 78,867, Jun. 18, 1993, abandoned, which is a continuation of Ser. No. 822,887, Jan. 21, 1992, Pat. No. 5,277,180, which is a continuation of Ser. No. 487,856, Mar. 5, 1990, Pat. No. 5,178,139. This application Jun. 22, 1995, Ser. No. 493,527

Int. Cl.⁶ A61F *13/15;7/00*

U.S. Cl. 604—358 **15 Claims**

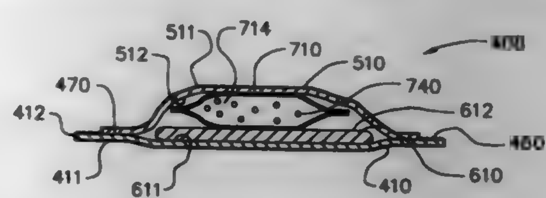

15. An improved absorbent pad and thermal pack for absorbing a liquid discharged from a patient, comprising in combination:

an outer sheet portion and an inner sheet portion;

said outer sheet portion having an outer surface and an inner surface;

said inner sheet portion having an outer surface and an inner surface with said inner sheet portion being made of a liquid permeable material;

said inner sheet portion providing a moderate thermal barrier;

an absorbent sheet having an inner surface and an outer surface;

said absorbent sheet being greater in thickness than said inner sheet portion for providing a substantial thermal barrier which is substantially greater than the moderate thermal barrier of said inner sheet portion;

a thermal pack comprising a flexible liquid impermeable container containing a chemical mixture which undergoes a thermal reaction upon activation of the chemical mixture;

said outer sheet portion being connected to said inner sheet portion for enclosing said thermal pack and said absorbent sheet with said thermal pack being interposed between said absorbent sheet and said inner sheet portion;

said inner sheet portion enabling said thermal pack to cool said patient and with said liquid permeable material of said inner sheet portion enabling any liquid from the patient to permeate through said inner sheet portion to be absorbed by said absorbent sheet;

said absorbent sheet establishing a substantial thermal insulator between said thermal pack and a temperature of ambient air and with said inner sheet portion establishing a moderate thermal insulator between said thermal pack and the patient for providing a preferential flow of heat between the patient and said thermal pack relative to the flow of heat between the ambient air and the thermal pack; and

said inner sheet portion being substantially thinner than said absorbent sheet and being the sole sheet interposed between said thermal pack and the patient for allowing the liquid discharged from the patient to migrate through said inner sheet portion to said absorbent sheet wherein the majority of the liquid discharged from the patient is absorbed by said absorbent sheet.

5,702,376

TOILET TRAINING AID PROVIDING A TEMPERATURE AND DIMENSIONAL CHANGE SENSATION

Frank Steven Glaug; Michael Scott Brunner; Faith Elleen Cochrane; Debra Hartley Durrance, all of Appleton; Christopher Peter Olson, Neenah; Robert Joseph Schleinz, and Richard Harry Thiessen, both of Appleton, all of Wis., assignors to Kimberly-Clark Worldwide, Inc., Neenah, Wis.

Continuation of Ser. No. 431,813, May 1, 1995, abandoned, which is a division of Ser. No. 362,291, Dec. 22, 1994, Pat. No. 5,649,914. This application Apr. 4, 1997, Ser. No. 833,313

Int. Cl.⁶ A61F *7/00;13/15*

U.S. Cl. 604—361 **12 Claims**

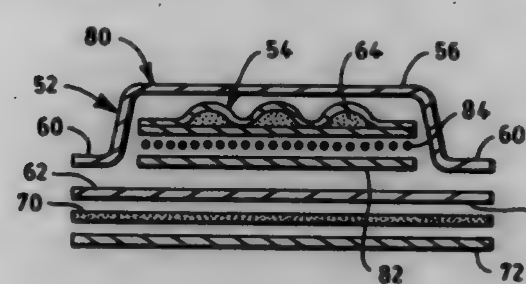

1. A toilet training aid for use with a garment, comprising: a pad comprising:

a casing;

a liquid permeable temperature change member within the casing, the temperature change member containing a temperature change substance;

a dimensional change member having a dry height dimension, the dimensional change member being adapted to expand to at least about 5 times the dry height dimension or contract to less than about one-fifth of the dry height dimension;

an adhesive layer bonded to the casing; and

a release strip releasably attached to the adhesive layer; the pad being adapted to provide a surface temperature change when wet of from about 5 to about 25 degrees Fahrenheit.

5,702,377

WET LINER FOR CHILD TOILET TRAINING AID

Leslie Warren Collier, IV; Ali Yahiaoui; Eric Mitchell Johns, all of Roswell, Ga., and Debra Hartley Durrance, Appleton, Wis., assignors to Kimberly-Clark Worldwide, Inc., Neenah, Wis.

Continuation of Ser. No. 268,697, Sep. 1, 1994, abandoned. This application Mar. 7, 1995, Ser. No. 400,627

Int. Cl.⁶ A61F *13/15;13/20*

U.S. Cl. 604—361 **9 Claims**

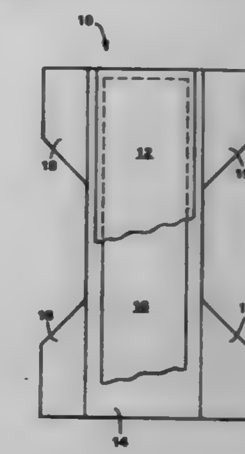

1. A personal care absorbent article comprising a liquid permeable body side liner, an outer cover and an absorbent core disposed between said body side liner and said outer cover to form said article,

said body side liner being sealed to said outer cover to encapsulate said absorbent core and comprising a nonwoven web having a plurality of fibers, said web including a wetness indicator treatment comprising a mixture of sorbitan monooleate and polyethoxylated hydrogenated castor oil,

said article having a relative surface moisture value of 60 percent or greater at approximately 1 minute and a relative surface moisture value of 55 percent or less at approximately 10 minutes.

5,702,378

RESILIENT MATERIAL AND DISPOSABLE, ABSORBENT ARTICLE COMPRISING SUCH A MATERIAL

Urban Widlund, Mölnlycke, and Roy Hansson, Mölndal, both of Sweden, assignors to Mölnlycke AB, Göteborg, Sweden

Division of Ser. No. 781,141, Dec. 27, 1991, Pat. No. 5,486,273. This application May 24, 1995, Ser. No. 447,531

Claims priority, application Sweden, Jul. 6, 1989, 8902457

Int. Cl.⁶ A61F *13/15*

U.S. Cl. 604—373 **3 Claims**

1. A disposable, absorbent article such as a diaper or an incon-

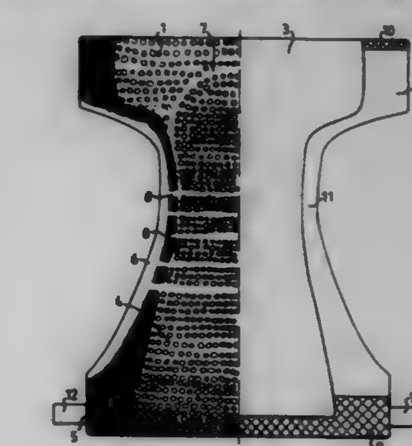

tinence guard, which comprises an outer casing layer, an inner

casing layer, and an absorbent pad enclosed between said inner and outer casing layers, at least one of the casing layers being manufactured from a thin elastic material which includes areas from which material has been removed while leaving coherent material parts in order to give different parts of the elastic material different elastic properties upon stretching thereof, the location of said areas on the article being chosen so as to give the article mutually different elastic properties in different parts thereof, said at least one of the inner and outer casing layers of elastic material including through holes and blind holes.

5,702,379
DISPOSABLE SANITARY ARTICLES
Shoshana Preiss, 7 Twineham Green, London N12 7ER, England
Continuation-in-part of Ser. No. 141,138, Oct. 22, 1993, abandoned. This application Mar. 30, 1995, Ser. No. 414,655
Claims priority, application United Kingdom, Oct. 22, 1992, 9222159
Int. Cl.⁶ A61F *13/15;13/20*
U.S. Cl. 604—385.1 **8 Claims**

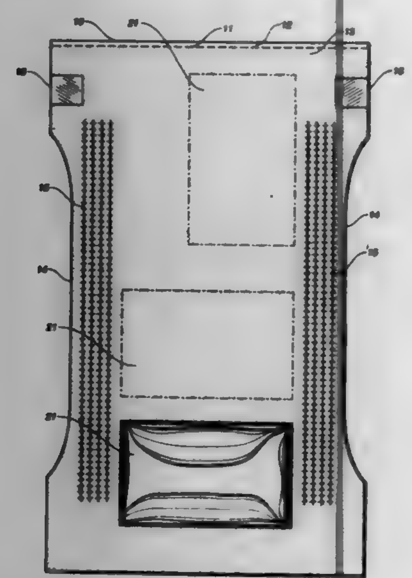

1. A disposable sanitary article comprising:
a first member comprising a pad of absorbent material;
a second member of an impervious material in a form of a bag having an internal surface and an external surface;
releasable attachment means for releasably attaching said first member to said external surface of said bag, said bag being detachable from said first member so as to receive therewithin a soiled first member of a previously used like disposable sanitary article;
a cleaning item;
a third member of an impervious material which sealingly encloses said cleaning item, said third member being enclosed by said second member; and
frangible attachment means comprising tearable perforations formed between said second member and said third member, said frangible attachment means for attaching said third member integrally to said second member such as to be unitary therewith but frangibly separable therefrom by breaking said tearable perforations of said frangible attachment means.

5,702,380
SANITARY NAPKIN
Rosemary Walker, 112 E. North St., Clayton, N.J. 08312
Filed Feb. 23, 1996, Ser. No. 606,064
Int. Cl.⁶ A61F *13/15*
U.S. Cl. 604—385.1 **2 Claims**

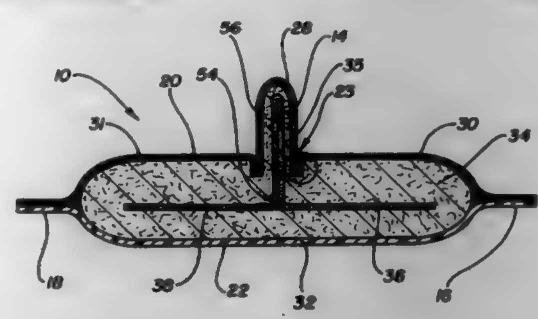

1. A sanitary napkin comprising:
(a) an elongate liquid-absorbent main pad body comprising:
(i) a longitudinal axis,
(ii) a transverse axis with a transverse width adapted for placement between a woman's thighs without folding,
(iii) a top surface, and
(iv) a bottom surface,
(b) first cover means covering the top surface of the main pad body to promote transfer of liquid coming into contact with said first cover means means to the main pad body,
(c) second cover means on bottom surface of the main pad body to prevent transfer of liquid out the bottom surface of the main pad body,
(d) a raised elongate pad section attached to the main pad body and aligned along the longitudinal axis of the main pad body, said pad section comprising:
(i) an upper convex arcuate edge, and
(ii) a height above the top surface of the main pad body sufficiently high to extend between the labia of a woman, when said top surface is held against the labia, but sufficiently low so as not to extend into the woman's vagina, and
(e) wicking means extending from the raised elongate pad section to the main pad body to promote liquid flow from the raised elongate pad section to the main pad body comprising:
(i) a sheet body having a vertical lateral cross-sectional shape of an inverted "T",
(ii) an elongate vertical section of the sheet body extending upwardly centrally into the raised elongate pad section from a proximately centrally located line extending longitudinally within the main pad body, and
(iii) an elongate horizontal section of the sheet body extending laterally outwardly from a lower end of said vertical section proximately centrally located within the main pad body.

5,702,381
MALE INCONTINENCE DEVICE
Alan M. Cottenden, Brickhill, England, assignor to McNeil-PPC, Inc., Skillman, N.J.
Continuation of Ser. No. 315,380, Sep. 30, 1994, abandoned. This application Nov. 15, 1996, Ser. No. 751,037
Claims priority, application United Kingdom, Aug. 19, 1994, 9416876
Int. Cl.⁶ A61F *13/15*
U.S. Cl. 604—385.1 **21 Claims**

21. An absorbent product useful as a male incontinence device comprising: a liquid-permeable, body-facing surface; a liquid-impermeable surface; and a thin, pleated absorbent structure therebetween having a tensile strength of at least about 0.01 lbs/inch width and an absorbent capacity of less than about 100 mL of urine; wherein (1) the product has an essentially triangular periphery and an interior, (2) the body-facing surface and the liquid-

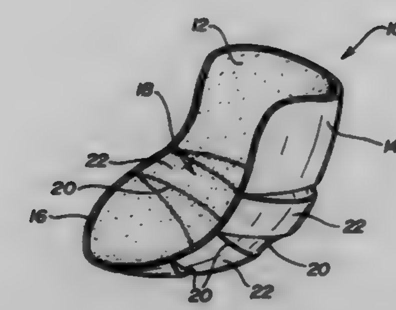

impermeable surface substantially enclose the absorbent structure, (3) the product has at least one pleat located in the interior of the product to allow the interior to be expanded from a folded configuration to an expanded configuration, (4) the periphery of the product is arranged and configured to resist substantial perimetric expansion whereby the product is capable of being articulated between a substantially planar structure and a three-dimensional, cup-like structure for use, and (5) the thin absorbent structure essentially completely fills the product when articulated into the three-dimensional structure.

5,702,382
EXTENSIBLE ABSORBENT ARTICLES
Thomas W. Osborn, III, Cincinnati, Ohio; Kazuko Sugahara, Osaka, Japan, and Letha M. Hines, Cincinnati, Ohio, assignors to The Procter & Gamble Company, Cincinnati, Ohio
Division of Ser. No. 315,315, Sep. 29, 1994, abandoned, which is a continuation of Ser. No. 915,284, Jul. 23, 1992, abandoned, which is a continuation-in-part of Ser. No. 539,779, Sep. 12, 1990, abandoned, Ser. No. 605,583, Oct. 29, 1990, Pat. No. 5,324,278, Ser. No. 630,451, Dec. 19, 1990, abandoned, Ser. No. 637,090, Jan. 3, 1991, Pat. No. 5,304,161, Ser. No. 637,571, Jan. 3, 1991, Pat. No. 5,300,054, Ser. No. 769,891, Oct. 1, 1991, Pat. No. 5,389,094, Ser. No. 769,607, Oct. 1, 1991, Pat. No. 5,354,400, Ser. No. 734,392, Jul. 23, 1991, Pat. No. 5,281,208, Ser. No. 734,404, Jul. 23, 1991, Pat. No. 5,356,405, Ser. No. 734,405, Jul. 23, 1991, Pat. No. 5,334,176, Ser. No. 794,745, Nov. 19, 1991, abandoned, Ser. No. 810,774, Dec. 17, 1991, abandoned, Ser. No. 823,797, Jan. 22, 1992, abandoned, Ser. No. 827,555, Jan. 28, 1992, abandoned, Ser. No. 832,246, Feb. 7, 1992, Pat. No. 5,344,416, Ser. No. 874,872, Apr. 28, 1992, abandoned, Ser. No. 882,738, May 14, 1992, abandoned, and Ser. No. 892,398, May 28, 1992, abandoned. This application Jun. 6, 1995, Ser. No. 470,285
Int. Cl.⁶ A61F *13/15*
U.S. Cl. 604—385.2 **9 Claims**

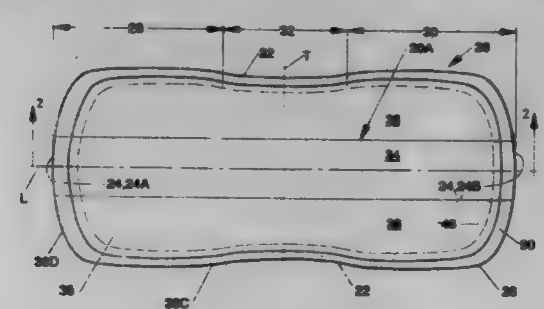

1. An extensible absorbent article for wearing in the crotch region of an undergarment, said absorbent article having a longitudinal centerline, a transverse centerline, a liquid-pervious side, a liquid impervious side, and an absorbent component positioned between said liquid pervious side and said liquid impervious side, wherein:
(a) a 1.0 inch wide strip having an initial length is cut from a longitudinal section of a first sample absorbent article that is centered about said longitudinal centerline is capable of extension of greater than or equal to about 110% of its initial length when subjected to a force of less than or equal to about 500 grams; and
(b) a 1.0 inch wide strip having an initial length is cut from a transverse section that runs parallel to the transverse centerline of a second absorbent article of the same type as the first absorbent article is capable of extension of greater than or equal to about 110% of its initial length when subjected to a force of less than or equal to about 400 grams.

5,702,383
BLOOD COMPONENT COLLECTION SYSTEMS AND METHODS USING AN INTEGRAL SAMPLING DEVICE
Richard Giesler, Deerfield; Ulrich C. Geissler, Barrington Hills; Margaret E. Stanford, Winnetka, all of Ill., and William E. Johnson, Gainsville, Mo., assignors to Baxter International Inc., Deerfield, Ill.
Division of Ser. No. 269,932, Jul. 1, 1994, abandoned. This application Jun. 17, 1996, Ser. No. 664,806
Int. Cl.⁶ A61B *19/00*
U.S. Cl. 604—409 **5 Claims**

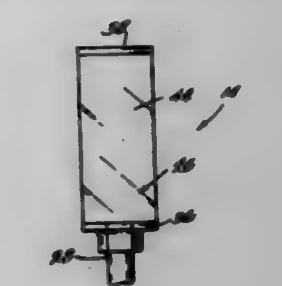

1. A method of collecting a blood sample comprising the steps of collecting blood in a container,
opening communication between the container and an external sample pouch through intermediate tubing, the external sample pouch comprising pouch walls made of a material having resilience to normally maintain the pouch walls in a spaced apart condition containing residual air,
with communication open through the intermediate tubing, applying an external squeezing force to move the pouch walls together against the resilience of the material into an essentially collapsed condition and thereby displace the residual air from the sample pouch through the intermediate tubing into the container,
closing the intermediate tubing to close communication between the container and the external sample pouch and retain the sample pouch in the essentially collapsed condition against the resilience of the material,
with the intermediate tubing closed, orienting the sample pouch in the essentially collapsed condition to receive blood from the container, and
with the sample pouch oriented in the essentially collapsed condition to receive blood from the container, opening the intermediate tubing to open communication between the container and the sample pouch through the intermediate tubing, the pouch walls returning, when the intermediate tubing is opened, from the essentially collapsed condition to the spaced apart condition solely in response to the resilience of the material to create a vacuum in the intermediate tubing that draws by suction a sample of the blood from the container into the sample pouch.

5,702,384

APPARATUS FOR GENE THERAPY

Koichi Umeyama, Kasukabe; Tadahiko Ogasawara, Tokyo; Kenji Yoshino, Tokyo; Katsushi Watanabe, Tokyo, and Koji Koda, Tokyo, all of Japan, assignors to Olympus Optical Co., Ltd., Tokyo, Japan

Division of Ser. No. 291,737, Aug. 17, 1994, abandoned, which is a continuation of Ser. No. 20,318, Feb. 19, 1993, abandoned. This application Jun. 2, 1995, Ser. No. 458,910

Claims priority, application Japan, Feb. 28, 1992, 4-43773; Nov. 27, 1992, 4-318656

Int. Cl.^{6} A61K *9/22*; C12N *15/00*

U.S. Cl. 604—892.1 — 8 Claims

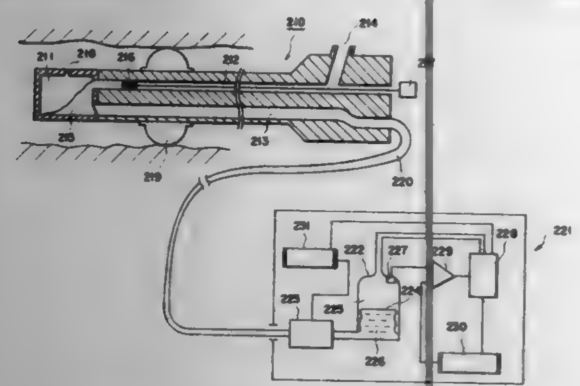

1. An apparatus for gene therapy, comprising:
a probe which is insertable into a body cavity;
supply means provided in said probe for supplying a gene or a gene-packaging particle onto a surface of a human living cell located at a target portion in the body cavity; and
a plurality of small needles in said probe and capable of protruding from a distal end of said probe for mechanically forming a plurality of pores in a cell membrane of the human living cell in order to transfer the gene or gene-packaging particle into the cell through the plurality of pores.

5,702,385

Patent Not Issued For This Number

5,702,386

NON-LINEAR CONTROL SYSTEMS AND METHODS FOR HEATING AND ABLATING BODY TISSUE

Roger A. Stern, Cupertino; Dorin Panescu, Sunnyvale, and David K. Swanson, Mountain View, all of Calif., assignors to EP Technologies, Inc., San Jose, Calif.

Continuation of Ser. No. 266,023, Jun. 27, 1994, abandoned, and Ser. No. 267,154, Jun. 28, 1994, abandoned, which is a continuation-in-part of Ser. No. 976,691, Nov. 13, 1992, Pat. No. 5,383,874, and Ser. No. 72,322, Jun. 3, 1993, abandoned, which is a division of Ser. No. 37,740, Mar. 26, 1993, abandoned, which is a continuation of Ser. No. 790,578, Nov. 8, 1991, abandoned. This application Jun. 28, 1996, Ser. No. 670,985

Int. Cl.^{6} A61B *17/36*

U.S. Cl. 606—34 — 23 Claims

1. An apparatus for supplying energy to an electrode for ablating tissue comprising
a generator adapted to be electrically coupled to an electrode to supply energy to the electrode for ablating tissue, and
a controller coupled to the generator to adjust power to the generator and thereby adjust energy supplied to the electrode, the controller comprising
a sampling element to monitor a selected operating condition resulting from supplying energy to the electrode and derive from it an operating value (V_D).

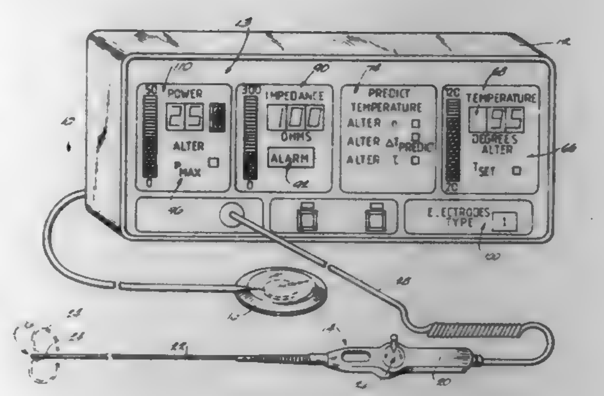

a processing element coupled to the sampling element to compare the derived operating value V_D to a preselected value (V_S) for the operating condition to establish an error signal (Δ), where:

$$\Delta = V_S - V_D$$

an output element coupled to the processing element to incrementally adjust power to the generator according to the following expression:

$$\Delta P = f(S_{SCALE} \times \Delta)$$

where:
ΔP is the incremental power adjustment;
f is a mathematical function; and
S_{SCALE} is a nonlinear scaling factor that equals a first value (X) when $\Delta > Z$ and equals a second value (Y), different than X, when $\Delta < Z$, where Z is a desired Δ.

5,702,387

COATED ELECTROSURGICAL ELECTRODE

Gene H. Arts, Berthoud; Jan E. Carr, Denver; Karen T. Kuk-Nagle, Boulder; Michael D. Lontine, Westminster, all of Colo., and Brian A. Millberg, St. Paul, Minn., assignors to Valleylab Inc, Boulder, Colo.

Filed Sep. 27, 1995, Ser. No. 534,353

Int. Cl.^{6} A61B *17/39*

U.S. Cl. 606—45 — 8 Claims

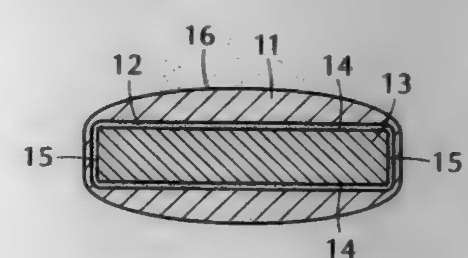

1. An electrode for an electrosurgical tool to be used for surgery on the tissue of a patient, the electrode comprising:
an elongate metallic shaft having a proximal end and a distal end, wherein the proximal end is shaped for insertion into the electrosurgical tool for conducting electrosurgical energy;
a patient end portion at the distal end for manipulation of the tissue of the patient;
a top coating on the patient end portion, the top coating comprising a polydiorganosiloxane elastomer, wherein the top coating is of non-uniform thickness over the patient end portion.

5,702,388

ORTHOPAEDIC RETAINER ATTACHABLE TO AN ELONGATE MEMBER

Kenneth S. Jackson, Warsaw; Charles D. Persons, Columbia City; Robert D. Krebs, Warsaw; Gregory G. Price, Warsaw, and Joel P. Bales, Warsaw, all of Ind., assignors to Zimmer, Inc., Warsaw, Ind.

Filed Feb. 20, 1996, Ser. No. 603,818

Int. Cl.^{6} A61B *17/56*

U.S. Cl. 606—54 — 25 Claims

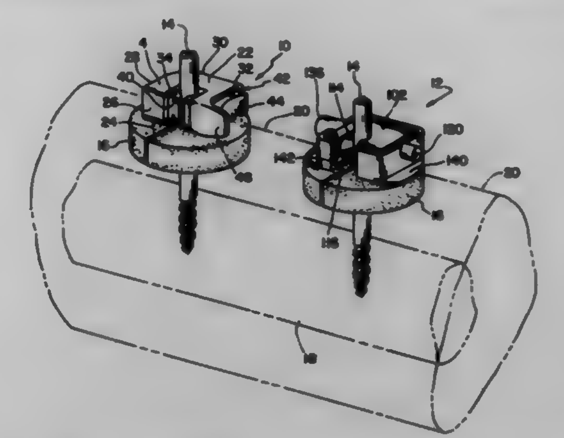

1. A retainer for securing a wound site dressing at the point of entry for an orthopaedic elongate member, said retainer being removably attachable to the elongate member adjacent the dressing said retainer comprising:
a body including a bottom and a side, said side disposed adjacent said bottom, and wherein said body further includes a top oppositely located from said bottom with said side positioned therebetween, said body further including an opening extending through said side and said bottom and said top, said opening configured for receiving the elongate member therein, whereby the elongate member is able to be received laterally in a side loading manner through said opening in the side, top, and bottom of said body;
a clamp movably attached to the body and engageable with the elongate member for retaining the elongate member within said opening; and
a resilient member for biasing said clamp into engagement with the elongate member.

5,702,389

ORTHOPAEDIC FIXATION DEVICE

Harold S. Taylor, and J. Charles Taylor, both of Memphis, Tenn., assignors to Smith & Nephew Richards, Inc., Memphis, Tenn.

Continuation of Ser. No. 396,624, Mar. 1, 1995, abandoned. This application Jan. 13, 1997, Ser. No. 782,731

Int. Cl.^{6} A61B *17/60*

U.S. Cl. 606—54 — 30 Claims

1. An orthopedic fixator for positioning a first element relative to

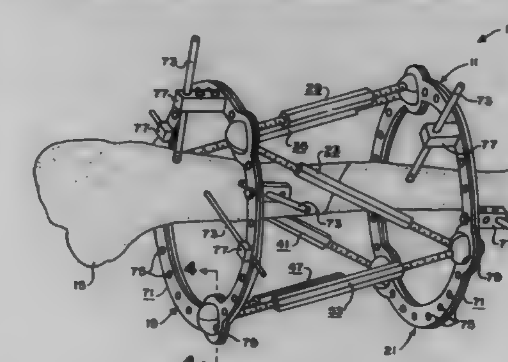

a second element, said fixator comprising:
(a) a first base member for mounting to said first element;
(b) a second base member for mounting to said second element;
(c) an adjustable effective length first strut having a first end and a second end;
(d) an adjustable effective length second strut having a first end and a second end;
(e) an adjustable effective length third strut having a first end and a second end;
(f) an adjustable effective length fourth strut having a first end and a second end;
(g) an adjustable effective length fifth strut having a first end and a second end;
(h) an adjustable effective length sixth strut having a first end and a second end;
(i) first connector for rotatably attaching said first ends of said first and second struts relative to one another and relative to said first base member;
(j) second connector for rotatably attaching said first ends of said third and fourth struts relative to one another and relative to said first base member;
(k) third connector for rotatably attaching said first ends of said fifth and sixth struts relative to one another and relative to said first base member;
(l) fourth connector for rotatably attaching said second ends of said first and sixth struts relative to one another and relative to said second base member;
(m) fifth connector for rotatably attaching said second ends of said second and third struts relative to one another and relative to said second base member; (n) sixth connector for rotatably attaching said second ends of said fourth and fifth struts relative to one another and relative to said second base member.

5,702,390

BIOPLAR CUTTING AND COAGULATION INSTRUMENT

Charles E. Austin; Kenneth R. Dufforn, both of Mason, Ohio, and Jay J. McElhenney, Barrington, R.I., assignors to Ethicon Endo-Surgery, Inc., Cincinnati, Ohio

Filed Mar. 12, 1996, Ser. No. 614,117

Int. Cl.^{6} A61B *17/39*

U.S. Cl. 606—48 — 2 Claims

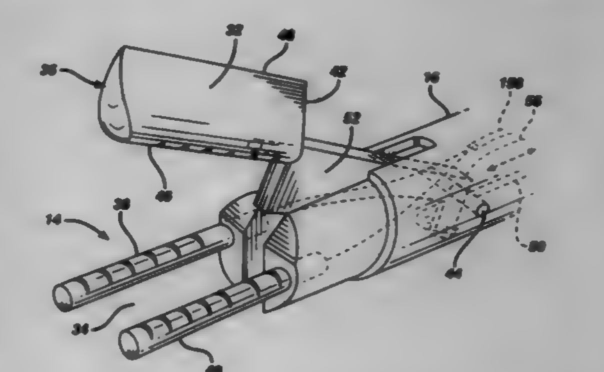

1. A bipolar electrosurgical instrument, wherein said instrument comprises:
a handle including first and second grip members;
an end effector comprising:
a first triangular shaped electrode pivotable about a first axis between an open position and a closed position, wherein said first electrode is further pivotable around a second axis which is substantially perpendicular to said first axis;
a coagulating surface on a first side of said first electrode;
a cutting edge on a second side of said first electrode;
second and third electrodes arranged substantially perpendicular to said first axis wherein said second and third elec-

trodes are substantially parallel to said second axis when said end effector is in said closed position;
an elongated hollow tube including a mechanism connecting said first grip member to said first electrode.

5,702,391
INTERVERTEBRAL FUSION DEVICE
Chih-I Lin, 14292 Spring Vista La., Chino Hills, Calif. 91709
Filed May 16, 1995, Ser. No. 442,095
Int. Cl.⁶ A61B *17/70*
U.S. Cl. 606—61 **4 Claims**

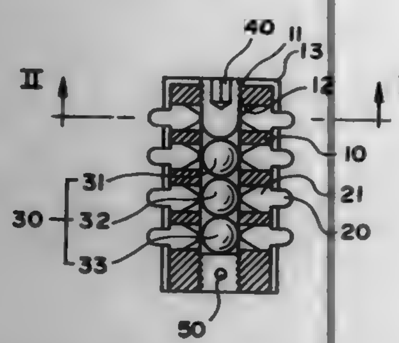

1. An intervertebral fusion device comprising:
a cylindrical body of a hollow construction and having at a top thereof an opening and further having axially a hollow interior, said cylindrical body provided peripherally with a plurality of through holes communicating the outside of said cylindrical body with said hollow interior of said cylindrical body;
a plurality of stretching elements disposed respectively and movably in said through holes of said cylindrical body such that said stretching elements can be caused to jut out of said through holes; said stretching elements provided respectively with a holding means capable of preventing said stretching elements from becoming disengaged from the cylindrical body;
an adjustment element disposed in said hollow interior of said cylindrical body such that inner ends of said stretching elements are urged by said adjustment element wherein said adjustment element comprises a plurality of separate and discrete members in contact with each other; and
an urging element inserted into said hollow interior of said cylindrical body via said opening located at the top of said cylindrical body such that said adjustment element can be actuated by a rotational motion of said urging element so as to force said stretching elements to extend out of said through holes of said cylindrical body to bring about an increase in diameter of said cylindrical body;
wherein one of said hollow cylindrical body and said adjustment element is provided with a retaining means engageable securely with said holding means of said stretching elements for preventing said stretching elements from becoming disengaged from said cylindrical body via said through holes.

5,702,392
COUPLING PLATE FOR SPINAL CORRECTION AND A CORRECTION DEVICE OF USING THE SAME
Shing-sheng Wu, 2nd Fl., No. 38-2, Sec. 3, Tingchou Rd., and Po-quang Chen, 1st Fl., No. 40-1, Lane 23, Yungkang St., both of Taipei, Taiwan
Filed Sep. 25, 1995, Ser. No. 533,101
Int. Cl.⁶ A61B *17/70*
U.S. Cl. 606—61 **4 Claims**

1. An assembly for spinal correction comprising:
a central rod;
a clamping tube having a truncated conical head sized to receive the central rod, an integrally formed step, and a threaded inner

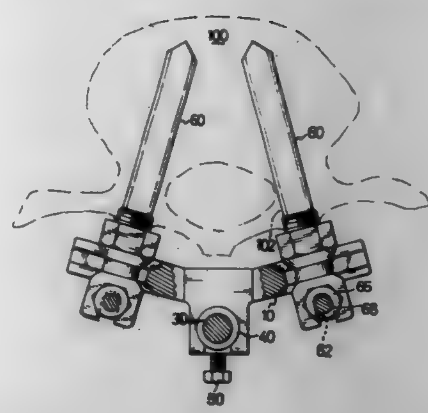

periphery defining a hole for a screw to extend therethrough and clamp the central rod;
a plate having two slots each extending from a distal end toward a center portion of the plate with grooved edges on inner walls of the slots and a channel perpendicular to an interconnection axis of the slots with an opening for receiving the step of the clamping tube;
a plurality of transpedicle screw assemblies each comprising a transpedicle screw with a hole defining in a head of the screw, two recesses being radially oppositely formed on a shank of the screw adjacent to the head thereof for engaging with the slot of the plate and a threaded portion being formed next to the recesses, and a cap nut for engaging with the threaded portion of the screw and mounting the transpedicle screw onto the plate;
two threaded shafts, one extending through the hole in the head of one of the transpedicle screw assemblies on one side of the central rod and the other extending through the hole in the head of another of the transpedicle screw assemblies on the other side of the central rod; and
a first nut and a second nut respectively threaded on each of the threaded shafts abutting the two ends of the hole in the head of each transpedicle screw so that a spinal correction is executed by turning the first and the second nuts.

5,702,393
ASSEMBLY DEVICE FOR ELONGATE COMPONENTS OF OSTEOSYNTHESIS, ESPECIALLY SPINAL, EQUIPMENT
Patrick Pfaifer, Lyons, France, assignor to Groupe Lepine, Lyons, France
Filed Dec. 2, 1996, Ser. No. 758,669
Claims priority, application France, Dec. 7, 1995, 95 14735
Int. Cl.⁶ A61B *17/56;* **A61F** *2/44*
U.S. Cl. 606—61 **8 Claims**

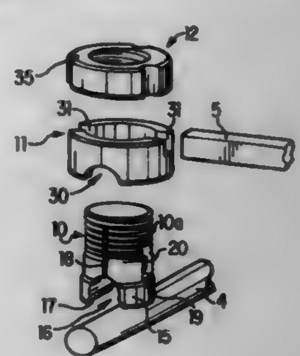

1. An assembly device for connecting elongate components, said assembly device comprising:
a body, said body having a threaded upper portion and two legs extending from said threaded upper portion with said two legs

delimiting between them a channel for accommodating a first one of said elongate components, said legs being capable of deflection relative to one another with such deflection changing the dimensions of said channel from a securing position of said legs for securing said first one of said elongate components within said channel to a releasing position of said legs for releasing said first one of said elongate components from said channel,
a portion of an outer periphery of said body defining a bearing surface,
a transverse portion of said body defining a transverse aperture through said body with said transverse aperture being dimensioned for allowing passage of a second one of said elongate components;
a ring fitting around said body and resting against said bearing surface when said legs are deflected to said securing position; and
a nut being threadedly engaged with said threaded upper portion and exerting an axial force against said ring for retaining said second one of said elongate components within said transverse aperture and pressing said ring against said bearing surface.

5,702,394
ASSEMBLY PIECE FOR AN OSTEOSYNTHESIS DEVICE
Patrick Henry; Philippe Lapreale, both of Neuilly-sur-Seine, and Gilles Missenard, Paris, all of France, assignors to Stryker Corporation, Kalamazoo, Mich.
PCT No. PCT/FR94/00437, § 371 Date Oct. 19, 1995, § 102(e) Date Oct. 19, 1995, PCT Pub. No. WO94/23661, PCT Pub. Date Oct. 27, 1994
PCT Filed Apr. 19, 1994, Ser. No. 535,278
Claims priority, application France, Apr. 20, 1993, 93 04625
Int. Cl.⁶ A61B *17/70*
U.S. Cl. 606—61 **12 Claims**

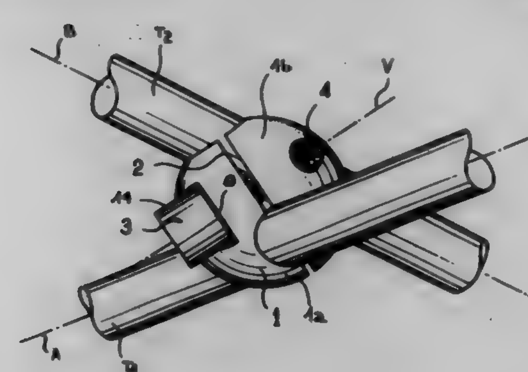

1. An assembly piece for assembling together two rods of an osteosynthesis device, comprising:
a body of biologically compatible material and of generally rounded shape, said body having a slot separating said body into two portions and having two bores on transverse axes passing obliquely through said slot, each of said bores being adapted to receive a respective rod to be assembled; and
a clamping screw interconnecting said portions so that tightening said screw locks the two rods in place by clamping them between said portions.

5,702,395
SPINE OSTEOSYNTHESIS INSTRUMENTATION FOR AN ANTERIOR APPROACH
Christoph Hopf, Mainz, Germany, assignor to Sofamor S.N.C., Rangdu Fliers, France
PCT No. PCT/US93/10908, § 371 Date May 10, 1995, § 102(e) Date May 10, 1995, PCT Pub. No. WO94/10927, PCT Pub. Date May 26, 1994
PCT Filed Nov. 10, 1993, Ser. No. 433,500
Claims priority, application France, Nov. 10, 1992, 92 13538
Int. Cl.⁶ A61B *17/70*
U.S. Cl. 606—61 **40 Claims**

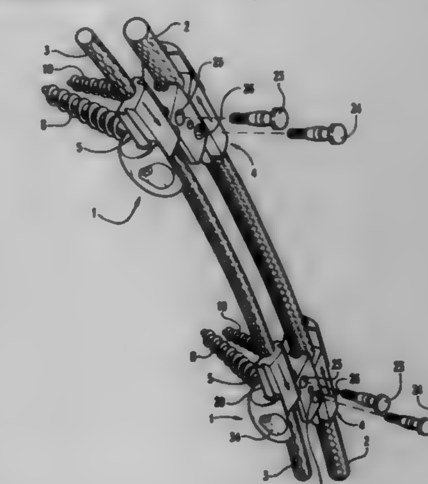

33. Spinal osteosynthesis instrumentation for an anterior approach, comprising:
a first elongated rod;
a second elongated rod having a diameter less than the diameter of said first elongated rod;
a block for transversely connecting said first and second rods adjacent the spine, said block defining a first elongated recess configured to receive said first rod therein and a second elongated recess configured to receive said second rod therein; and
means for clamping said first and second rod within said first and second recess, respectively, against rotation and translation relative to said block.

5,702,396
OSTEOSYNTHESIS PLATE
Johannes Franz Hoenig, Nikolausbergerweg 3 A, 37073 Goettingen, Germany, and Kevin Thomas Stone, 2940 E. Patterson Rd., Warsaw, Ind. 46580
Continuation of Ser. No. 622,162, Mar. 27, 1996. This application Jul. 31, 1996, Ser. No. 688,737
Claims priority, application Germany, Mar. 27, 1995, 195 11 268.7
Int. Cl.⁶ A61B *17/58*
U.S. Cl. 606—69 **7 Claims**

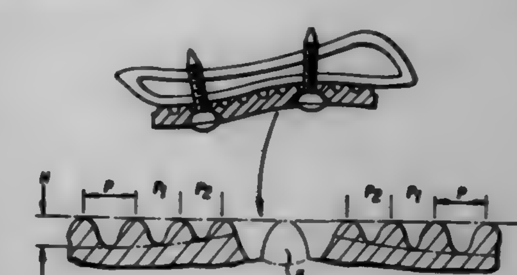

1. An osteosynthesis plate for anatomical reduction of bone fragments after fractures and osteotomies, for stabilization of bone

fragments in surgical treatment of cranio-facial anomalies, malocclusions and reconstructions after tumor resections, comprising a surface of the osteosynthesis plate facing the bone having a knob profile comprising a plurality of knobs, each having a height and each separated by a distance,

the height of the knobs in the knob profile, in a section along successive knobs, is between 0.4 and 2.5 millimeters, measured between the deepest profile point and the peak of the knobs, and the distance between successive knobs is between 0.8 and 3.5 millimeters, measured between the highest points of two successive knobs, wherein the height of the knobs and the distance between the highest points of the knobs are of precisely variable design so that essentially equal strength properties are maintained over the entire plate surface, and wherein

the knob dimensions including the height of the knobs and the distance between the highest points of two adjacent knobs, are designed smaller in the area of screw holes than in the remaining surface area.

5,702,397
LIGAMENT BONE ANCHOR AND METHOD FOR ITS USE
E. Marlowe Goble; David P. Luman; Alan Chervitz, all of Logan; C. Brad Story, Liberty, and Ramarao Gundlapalli, Logan, all of Utah, assignors to MedicineLodge, Inc., Logan, Utah
Filed Feb. 20, 1996, Ser. No. 603,119
Int. Cl.⁶ A61B *17/84*
U.S. Cl. 606—72 **18 Claims**

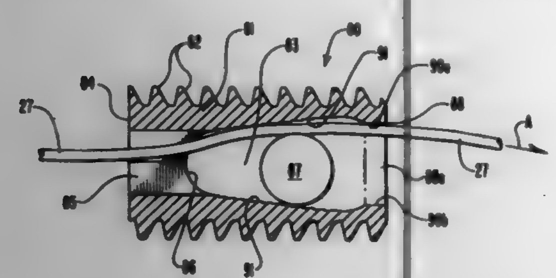

1. A bone anchor comprising a body that includes means for securing said body in a tunnel section formed in a bone mass and includes an axial opening with an end of said opening formed to receive an insertion tool and is configured to receive a clamping means fitted therein; a clamping means formed to fit within and be axially movable within said body axial opening so as to move a clamping surface or surfaces towards a surface of said body axial opening and said clamping means is to engage a surface of a suture or shaft means fitted in a said axial opening to clamp said suture or shaft means surface against said surface of said body axial opening; means for maintaining said clamping means to be movable in said axial opening; and at least one said suture or shaft means for fitting in said body to pass between said surface or surfaces of said clamping means and said surface of said body axial opening.

5,702,398
TENSION SCREW
Sam Tarabishy, 11339 Cortez Blvd., Suite 106, Brooksville, Fla. 34613-5494
Filed Feb. 21, 1997, Ser. No. 803,574
Int. Cl.⁶ A61B *17/00*
U.S. Cl. 606—72 **11 Claims**

1. A tension screw of the type primarily intended for anchoring one end of a ligament graft to a bone during surgery to repair a ligament, said tension screw comprising: a cannulated screw having a head and a shaft extending distally from said head, said

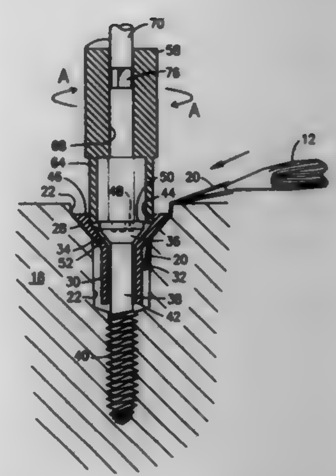

cannulated screw further comprising a hook-type projection extending radially from a segment of said shaft, whereby an end of the ligament graft may be attached to said projection; and a bone screw dimensioned and configured to extend through said cannulated screw, said bone screw comprising a bone screw head, a body extending distally from said bone screw head, and a threaded shaft extending distally from said body, said threaded shaft extending longitudinally beyond a distal end of said cannulated screw shaft, whereby said bone screw may be attached to the bone.

5,702,399
SURGICAL CABLE SCREW CONNECTOR
Thomas S. Kilpela; George J. Iwanski; Matthew N. Songer, all of Marquette, Mich., and Robert J. Songer, Northbrook, Ill., assignors to Pioneer Laboratories, Inc., Marquette, Mich.
Filed May 16, 1996, Ser. No. 648,685
Int. Cl.⁶ A61B *17/58*
U.S. Cl. 606—72 **10 Claims**

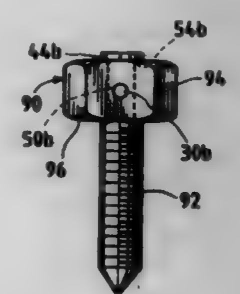

1. A screw-type cable connector which comprises a screw-threaded body and a screw head carried on said body; a cable receiving bore defined in said head, said head comprising a transverse, screw-threaded hole intersecting and extending beyond said bore; a malleable sleeve of greater length than its width occupying said bore and extending across said hole in bridging relation; and a retention screw rotatably mounted in said hole, whereby a cable extending through said sleeve in said bore may be bent with said sleeve by the advancing retention screw into a cable-retaining, clamped condition.

5,702,400
INTRAOCULAR LENS FOLDER
Kyle Brown, Fort Worth; Stephen J. Van Noy, Arlington; Yi-Ren Woo, Flower Mound, and Lars D. Jensen, Arlington, all of Tex., assignors to Alcon Laboratories, Inc., Fort Worth, Tex.
Filed Dec. 11, 1996, Ser. No. 766,539
Int. Cl.⁶ A61F *9/00*
U.S. Cl. 606—107 **8 Claims**

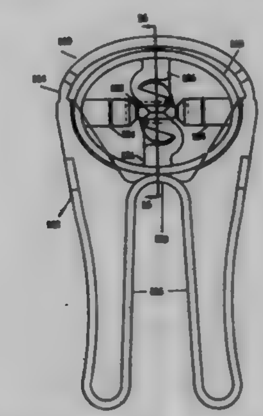

1. An intraocular lens folder for allowing a lens' haptics pivot downward during folding, said intraocular lens folder comprising:
a) a first handle and a second handle, both handles having upper portions;
b) a hinge connecting the first handle to the second handle at the upper portions of the first and second handles;
c) a deformable rim generally arcuate in shape extending between the upper portion of the first handle and the upper portion of the second handle thereby defining a half ring-like head with a hollow center;
d) a first serpentine jaw located on the rim generally opposite the hinge and projecting into the hollow center; and
e) a second serpentine jaw located at the hinge and projecting into the hollow center generally toward the first serpentine jaw.

5,702,401
INTRA-ARTICULAR MEASURING DEVICE
Benjamin Shaffer, 2111 Wisconsin Ave. NW., Apt. 305, Washington, D.C. 20007
Division of Ser. No. 83,753, Jun. 28, 1993, abandoned. This application Dec. 30, 1994, Ser. No. 366,514
Int. Cl.⁶ A61B *17/56*
U.S. Cl. 606—102 **4 Claims**

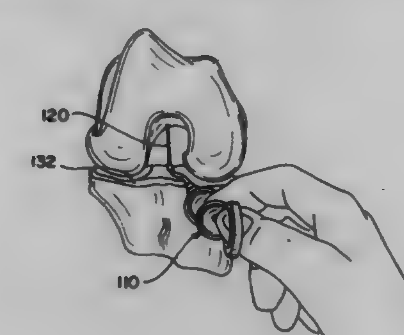

1. A method of measuring distance between a first bone and a second, different bone in a patient, said method comprising:
forming a portal in soft tissue of the patient to access the first bone and the second bone;
providing an intra-articular measuring device including:
a hollow handle having a distal end and a proximal end and defining a first passageway therebetween;
a hollow tube having a distal end, a proximal end, and a second passageway extending therebetween, said tube proximal end being connected to said handle distal end;
said hollow tube carrying a projection near said tube distal end for seating on a first selected region of the first bone;
a probe slidably disposed within said first and second passageways, and having a distal end and a proximal end, said hollow tube having a curvature sufficient to direct said distal end of said probe to a second selected region on the second, different bone to enable measurement of the distance between said first selected region and said second selected region when said distal probe end is advanced distally beyond said tube distal end to said second selected region;
inserting said tube distal end through the portal;
placing said projection on said first selected region;
advancing said probe distally beyond said tube distal end until said probe reaches said second selected region; and
observing the distance between said first and second regions based on an amount by which said probe has been advanced to reach said second selected region.

5,702,402
METHOD AND APPARATUS FOR FOLDING OF INTRAOCULAR LENS
Daniel G. Brady, Mission Viejo, Calif., assignor to Allergal, Waco, Tex.
Filed Apr. 29, 1994, Ser. No. 235,444
Int. Cl.⁶ A61F *9/00*
U.S. Cl. 606—107 **21 Claims**

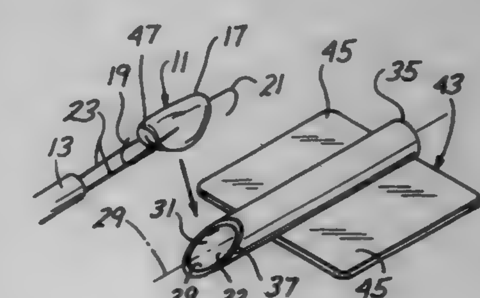

1. A method of inserting a foldable intraocular lens into the eye of a patient comprising:
holding a foldable intraocular lens in a first folded condition using a holder with the intraocular lens having at least one fold in said first folded condition;
folding the intraocular lens into a second folded condition using the holder and a tubular member with the intraocular lens having at least said first fold and a second fold in said second folded condition;
retaining the intraocular lens in said second folded condition in the tubular member; and
transferring the intraocular lens substantially in said second folded condition from the tubular member to the eye of the patient.

5,702,403
EPILATING APPLIANCE
Hans-Eberhard Heintke, Wächtersbach, and Achim Flesser, Königstein, both of Germany, assignors to Braun Aktiengesellschaft, Frankfurt, Germany
PCT No. PCT/EP94/00653, § 371 Date Nov. 17, 1994, § 102(e) Date Nov. 17, 1994, PCT Pub. No. WO94/21151, PCT Pub. Date Sep. 29, 1994
PCT Filed Mar. 4, 1994, Ser. No. 338,568
Claims priority, application Germany, Mar. 24, 1993, 43 09 406.6
Int. Cl.^{6} A45D *26/00*
U.S. Cl. 606—133 **16 Claims**

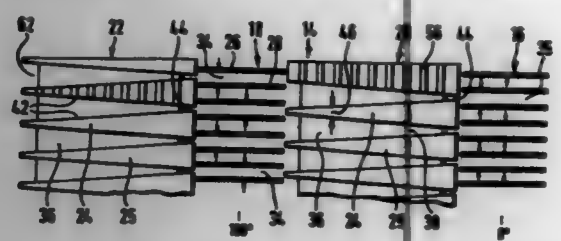

1. An epilating appliance for the removal of body hairs, comprising:
a cylinder having a central axis about which the cylinder rotates, an outer surface of the cylinder including a pair of relatively fixed blades and a pair of relatively movable gripping elements,
the pair of fixed blades defining a funnel-shaped groove therebetween having a first end section of relatively increased width and a second end section of relatively reduced width, the groove being oriented along a direction of rotation of the cylinder,
the pair of gripping elements defining a gripping aperture therebetween of substantially constant width oriented along the direction of rotation of the cylinder, the gripping aperture being circumferentially aligned with the groove, the pair of gripping elements being adapted to approach each other and recede form each other such that movement of the pair of gripping elements closes and opens the gripping aperture.

5,702,404
STOOL EXTRACTOR
Suzan E. Willingham, 1204 J.J. Flewellen, Waco, Tex. 76704
Filed Jun. 3, 1996, Ser. No. 656,764
Int. Cl.^{6} A61B *17/42*
U.S. Cl. 606—122 **7 Claims**

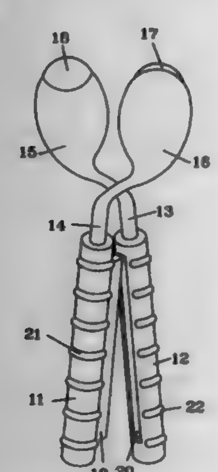

1. A surgical instrument for removing fecal impaction having an insertion end and a handle end, comprising:
a first handle;
a first curved member attached to the first handle;
a first spoon shaped portion, having a first rounded and thickened end at an insertion end, and a second end attached to the first handle by the first curved member;
a second handle;
a second curved member attached to the second handle;
a second spoon shaped portion, having a first rounded and thickened end at an insertion end, and a second end attached to the second handle by the second curved member;
a tongue and groove arrangement extending the length of the first and second handles, with the tongue extending from one of said first and second handles, and said groove extending into a different one of said first and second handles.

5,702,405
STEREOTACTIC AUXILIARY ATTACHMENT FOR A TOMOGRAPHY APPARATUS FOR TOMOGRAM GUIDED IMPLEMENTATION OF A BIOPSY
Sylvia Heywang-Koebrunner, Engelsdorf, Germany, assignor to Siemens Aktiengesellschaft, Munich, Germany
Filed Nov. 29, 1995, Ser. No. 564,645
Claims priority, application Germany, Nov. 30, 1994, 44 42 609.7
Int. Cl.^{6} A61B *19/00*
U.S. Cl. 606—130 **5 Claims**

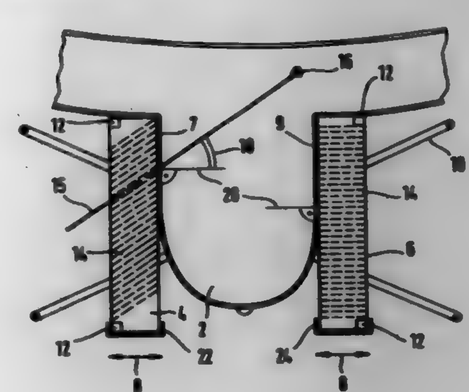

1. A stereotactic auxiliary attachment for a tomography apparatus for conducting a tomogram-guided biopsy of a female breast, said attachment comprising:
first and second compression plates adapted for receiving a female breast therebetween;
means for moving said compression plates toward and away from each other for fixing a position of a breast therebetween;
each compression plate having a plurality of through-holes therein arranged to provide a plurality of substantially arbitrary access paths, each hole adapted to receive a biopsy needle therethrough for providing a guided access of said biopsy needle into a breast; between said compression plates; and
each compression plate having a pressing surface and said through-holes in at least one of said compression plates being oriented obliquely, relative to a surface normal, toward a chest wall of a subject of said compressing surface and forming means for accessing a site in a breast adjacent a chest wall.

5,702,406
DEVICE FOR NONINVASIVE STEREOTACTIC IMMOBILIZATION IN REPRODUCIBLE POSITION
Stefan Vilsmeier, Poing; Stefan Lippstreu, Markt Schwaben, and Michael Bertram, Heimstetten, all of Germany, assignors to BrainLAB Med. Computersysteme GmbB, Germany
Filed Sep. 11, 1995, Ser. No. 526,626
Claims priority, application Germany, Sep. 15, 1994, P 44 32 891.5
Int. Cl.^{6} A61B *19/00*
U.S. Cl. 606—130 **10 Claims**

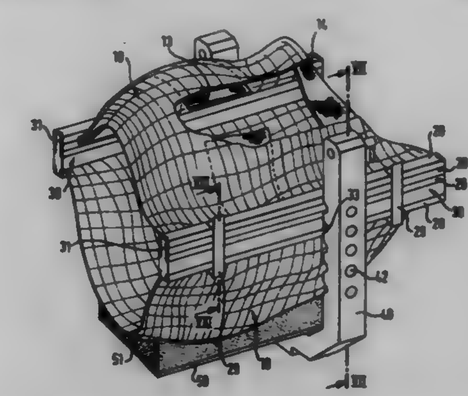

1. For noninvasive, stereotactic immobilization of a head in reproducible position in a firm reference system, said reference system comprising a head ring having a pair of support legs, said legs, adapted to be positioned at opposite sides of the head of a specific patient,
a mask comprising a plurality of separate parts capable of assuming a given conformation, a first of said parts being adapted to be conformed to and to cover the anatomical contours of a first area of the specific patient's head, a second of said parts being adapted to be conformed to and to cover the anatomical contours of a second area of the specific patient's head which is not covered by the first of said parts, and
means for connecting the mask parts with one another, said connection means also connecting the connected mask parts to the reference system, wherein
said connection means comprises a pair of support strips for each mask part, said support strips adapted to be adjustably mounted on the pair of support legs to position the first of said parts to overlie the first area of the patient's head and to position the second of said parts to overlie the second area of the patient's head, and a pair of connecting strips mounting said support strips for adjusting the position of the mask parts relative to one another, and adjusting the position of the position of the mask parts relative to said reference system to thereby separately adjust the pressures applied to the first and second areas by said first and second mask parts.

5,702,407
LIGATING APPARATUS
Kunihide Kaji, Koganei, Japan, assignor to Olympus Optical Co., Ltd., Tokyo, Japan
Filed Nov. 27, 1995, Ser. No. 563,049
Claims priority, application Japan, Nov. 29, 1994, 6-294989; Apr. 10, 1995, 7-084221; May 19, 1995, 7-121856
Int. Cl.^{6} A61B *17/10*
U.S. Cl. 606—139 **24 Claims**

1. A ligating apparatus comprising:
a first ligating member having an insertion portion to be inserted into a living body, and a holding member with a substantially C-shaped, unclosed loop portion having a constant gap section therein, said loop portion being capable of holding at least one of a ligation thread for forming a knot and a needle; and

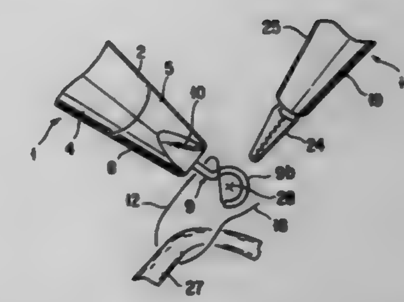

a second ligating member having a manipulating device capable of holding at least one of the needle and an end portion of the ligation thread, and capable of being passed through said loop portion,
whereby when said loop portion holds the ligation thread and said manipulating device holds the end portion of the ligation thread, said second ligating member is cooperable with said first ligating member to form a knot in the ligation thread by passing the manipulating device through a knot forming loop defined by the ligation thread and said loop portion.

5,702,408
ARTICULATING SURGICAL INSTRUMENT
Kenneth S. Wales, Mason; Joseph F. Paraschac, Dayton, and David Stefanchik, Mason, all of Ohio, assignors to Ethicon Endo-Surgery, Inc., Cincinnati, Ohio
Filed Jul. 17, 1996, Ser. No. 684,282
Int. Cl.^{6} A61B *17/10*
U.S. Cl. 606—139 **8 Claims**

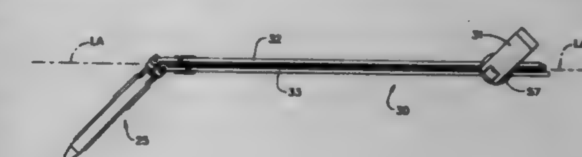

1. An articulation assembly adapted for use with a surgical instrument wherein said instrument has a longitudinal axis, said articulation assembly comprising a four-bar linkage which includes:
a) a first link in the form of an actuation lever operatively connected to said instrument for movement transverse to the longitudinal axis thereof;
b) second and third links operatively connected to said first link for reciprocating movement by a driver assembly mounted to said instrument, said second and third links being generally parallel to each other and the longitudinal axis, and said second and third links being movable inwardly towards each other from a spaced-apart position to an adjacent position;
c) a fourth link in the form of an end effector for said instrument attached to said second and third links for movement transverse to the longitudinal axis;
wherein when said first link is pivotally rotated in a first direction from an unactuated position generally parallel to the longitudinal axis to an actuated position:
i) said driver assembly causes said second and third links to move in tandem generally parallel to the longitudinal axis in opposite directions;
ii) said second and third links move inwardly towards each other from said spaced-apart position to said adjacent position; and
iii) said fourth link rotates in said first direction from an unarticulated position to an articulated position.

5,702,409
DEVICE AND METHOD FOR REINFORCING SURGICAL STAPLES
Gary L. Rayburn, Moore, Okla.; Rob G. Riffle, Flagstaff, Ariz.; Frederick J. Walburn, Flagstaff, Ariz., and Benjamin G. Williams, Flagstaff, Ariz., assignors to W. L. Gore & Associates, Inc., Newark, Del.
Filed Jul. 21, 1995, Ser. No. 505,728
Int. Cl.^{6} A61B *17/00*
U.S. Cl. 606—151 **23 Claims**

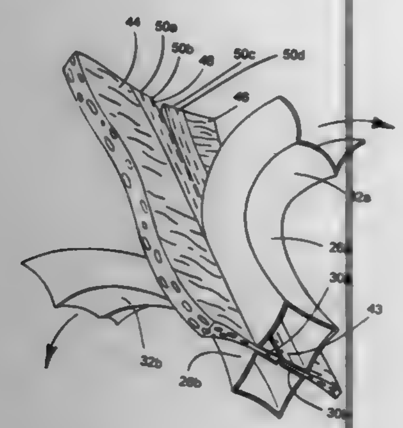

1. A surgical staple line reinforcement device that comprises bio-implantable material having at least one operative face proportioned to reinforce surgical staples at a surgical site, and walls extending from either side of the operative face, the face and the walls comprising the same material;
wherein the face and walls form a tube having a generally rectangular cross sectional shape; and
wherein the device is proportioned to be held on a stapler arm through friction of the face and walls against the stapler arm.

5,702,410
BALLOON CATHETER WITH BALLOON PROTECTION SHEATH
Rento Willem Klunder, Groningen, and Gerda Hendrika Maria Van Werven-Franssen, Roden, both of Netherlands, assignors to Cordis Corporation, Miami Lakes, Fla.
Filed May 21, 1996, Ser. No. 651,926
Claims priority, application Netherlands, May 22, 1995, 1000413
Int. Cl.^{6} A61M *29/00*
U.S. Cl. 606—194 **7 Claims**

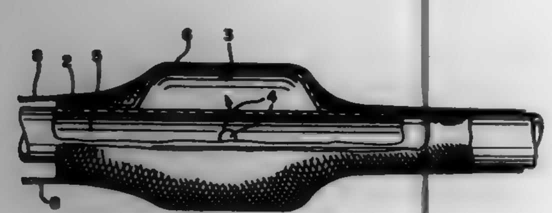

1. A catheter comprising a basic tubular body having a distal end and a proximal end, a balloon member which is arranged on the distal end, an elongate, elastic balloon protection sheath which is arranged on or in the basic tubular body close to the balloon member and at least one pull thread connected to the end of the sheath facing toward the balloon member, the at least one pull thread extending to the proximal end of the basic tubular body for being pulled to pull the sheath over the balloon member.

5,702,411
CLAMPING RING FOR A SURGICAL CLIP
Lothar Back, Inzighofen; Gebhard Herrmann, Irndorf; Markus Nesper, Tuttlingen, and Dieter Weisshaupt, Immendingen, all of Germany, assignors to Aesculap AG, Tuttlingen, Germany
Filed Aug. 20, 1996, Ser. No. 700,009
Claims priority, application Germany, Sep. 15, 1995, 195 34 323.9
Int. Cl.^{6} A61B *17/08*
U.S. Cl. 606—157 **27 Claims**

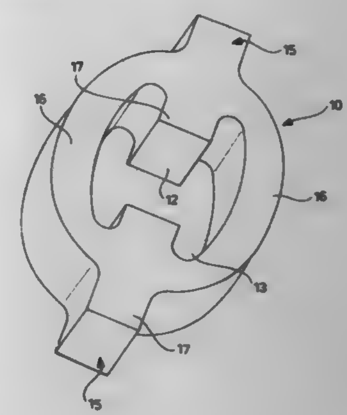

26. A clamping ring for a surgical clip, said clip comprising two arms which extend in a longitudinal direction and which are elastically pivotable towards each other and each have one clamping jaw, an end section in which said arms meet, and a tensioning section located between said clamping jaws and said end section, said clamping ring surrounding said arms and being displaceable along said tensioning region in the longitudinal direction, said clamping ring comprising:
diametrically opposed projections formed in one piece with said clamping ring and protruding inwardly toward one another into an area surrounded by said clamping ring to engage between said arms; and
diametrically opposed projections integrally formed on said clamping ring and protruding outwardly.

5,702,412
METHOD AND DEVICES FOR PERFORMING VASCULAR ANASTOMOSIS
Alexander Popov, Los Angeles, Calif., and Peter Barath, Hinsdale, Ill., assignors to Cedars-Sinai Medical Center, Los Angeles, Calif.
Filed Oct. 3, 1995, Ser. No. 538,575
Int. Cl.^{6} A61B *17/32*
U.S. Cl. 606—159 **35 Claims**

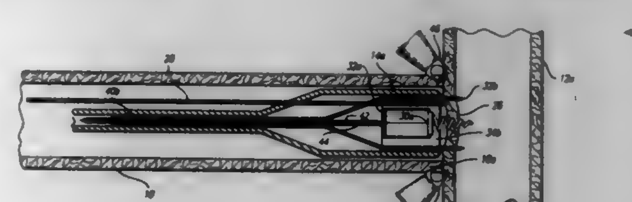

1. A catheter for performing an end-to-side anastomosis between a severed end of a first hollow organ and a side-wall of a second hollow organ of a patient, comprising:
an elongated body having proximal and distal ends and adapted for introduction into and through the first hollow organ; and
a selectively operable cutter disposed within the body and having a cutting surface at the distal end which is configured to remove a portion of a side-wall of the second hollow organ.

5,702,413
CURVED BRISTLE ATHERECTOMY DEVICE AND METHOD
Daniel M. Lafontaine, Plymouth, Minn., assignor to Scimed Life Systems, Inc., Maple Grove, Minn.
Filed Jan. 11, 1996, Ser. No. 584,474
Int. Cl.^{6} A61B *17/22;* **A61M** *29/00*
U.S. Cl. 606—159 **13 Claims**

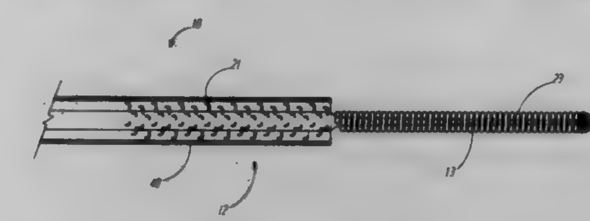

1. A medical device for removing occlusive material and the like from a patient's vasculature or body cavities, the device comprising:
an elongate flexible shaft having a proximal end and a distal end, the
distal end being insertable into the vasculature; and
a plurality of flexible bristles disposed on the distal end of the elongate shaft, wherein the bristles comprise a shape memory material that reversibly changes shape when subjected to a change in temperature beyond a transition temperature and the bristles are adapted to capture occlusive material.

5,702,414
METHOD OF IMPLANTING AN INTRAOCULAR IMPLANT
Jacob Richter; Gregory Pinchasik, both of Ramat Hasharon, and Ira Yaron, Har Adar, all of Israel, assignors to Optonol Ltd, Tel Aviv, Israel
Division of Ser. No. 623,238, Mar. 27, 1996. This application Sep. 5, 1996, Ser. No. 711,377
Claims priority, application Israel, May 14, 1995, 113723
Int. Cl.^{6} A61B *17/00*
U.S. Cl. 606—166 **17 Claims**

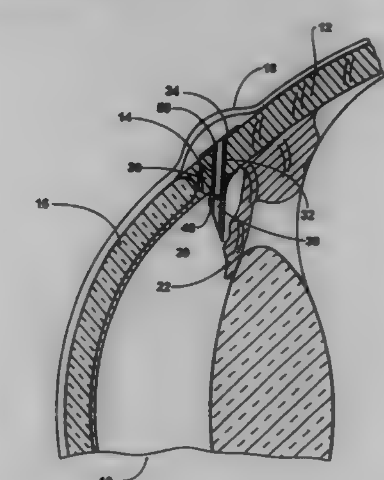

1. A method of implanting an intraocular implant into an eyeball comprising the steps of:
attaching the implant to a delivery device;
cutting a slit in a portion of the conjunctiva of the eyeball which normally lies at a distance away from an intended implantation site;
placing the implant by the delivery device through the slit in the conjunctiva;
directing the implant by the delivery device to the implantation site;
inserting the implant through the sclera at the implantation site;
withdrawing the delivery device; and
allowing the slit in the conjunctiva to lie at the distance away from the implantation site.

5,702,415
CHUCK AND BLADE FOR POWERED MEDICAL HANDPIECE
John T. Matthai, and Richard F. Huyser, both of Kalamazoo, Mich., assignors to Stryker Corporation, Kalamazoo, Mich.
Division of Ser. No. 326,043, Oct. 19, 1994, Pat. No. 5,468,247, which is a continuation of Ser. No. 67,740, May 26, 1993, abandoned. This application Sep. 8, 1995, Ser. No. 526,054
Int. Cl.^{6} A61B *17/14*
U.S. Cl. 606—178 **13 Claims**

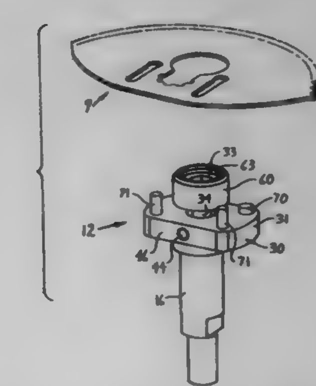

12. A chuck for mounting on and oscillatory driving by a powered medical handpiece for oscillatory driving of blades, including cast cutter blades, said chuck comprising:
a platform for mounting on and oscillatory driving by a medical handpiece;
threaded clamp means for continuously maintaining threaded engagement with said platform throughout installation and removal of a blade with respect to said platform, said clamp means being captively located on and threaded with respect to said platform, said clamp means compressing a radially enlarged head means threadably adjustable toward said platform for clamping a blade fixedly to said platform and threadedly adjustable away from said platform for unclamping a blade from said platform;
keeper means capturing said clamp means for limiting spacing of said head means from said platform between a captive tight position clamping a blade to said platform and a captive loose position allowing sliding of a blade along said platform laterally out of range of clamping engagement by said head means despite continued engagement by said clamp means with said platform;
drive means fixed with respect to and upstanding from a top face of said platform at a location radially offset from said clamp means and moveable through an arc upon oscillatory driving of said chuck by a powered medical handpiece, said upstanding drive means being engageable with a blade for oscillating same in response to oscillatory driving by a medical handpiece.

5,702,416

APPARATUS FOR DEVELOPING AN ANATOMIC SPACE FOR LAPAROSCOPIC HERNIA REPAIR AND PATCH FOR USE THEREWITH

Maciej J. Kieturakis, San Carlos; Kenneth H. Mollenauer, Santa Clara; Michelle Y. Monfort, Los Gatos, and Helmut L. Kayan, Redwood City, all of Calif., assignors to Genral Surgical Innovations, Inc., Cupertino, Calif.

Division of Ser. No. 124,283, Sep. 20, 1993, which is a continuation-in-part of Ser. No. 893,988, Jun. 2, 1992. This application Jun. 7, 1995, Ser. No. 480,660

Int. Cl.⁶ A61M *29/00*

U.S. Cl. 606—193 **12 Claims**

1. A balloon assembly for use with a tunneling member comprising:

a first sheet and a second sheet of a material which is substantially inelastic within a predetermined range of inflation pressures, said first and second sheets each having outer margins, said outer margins being bonded together to form a balloon having an enclosed space;

a sleeve on said balloon for receiving the tunneling member; and

a tubular member extending into said ballon for introducing a balloon inflation medium into said enclosed space to inflate said balloon to a predetermined size and shape, as determined by said substantially inelastic material.

5,702,417

BALLOON LOADED DISSECTING INSTRUMENTS

George D. Hermann, Los Gatos, Calif., assignor to General Surgical Innovations, Inc., Cupertino, Calif.

Filed May 22, 1995, Ser. No. 447,124

Int. Cl.⁶ A61M *29/00*

U.S. Cl. 606—194 **5 Claims**

1. A method of dissecting layers of tissue to create a working space between the tissue layers, said method comprising:

providing an elongate balloon tube and a substantially rigid pushing member disposed within the balloon tube, the pushing member being coupled to the balloon tube;

inserting the balloon tube between the layers of tissue;

pushing the balloon tube by pushing the pushing member along a path to be dissected between the layers of tissues; and

inflating the balloon tube before the balloon tube is inserted between the tissue layers to cause the balloon tube to expand and create the working space between the layers of tissue.

5,702,418

STENT DELIVERY SYSTEM

Adrian C. Ravenscroft, Lower Mills, Mass., assignor to Boston Scientific Corporation, Natick, Mass.

Filed Sep. 12, 1995, Ser. No. 526,968

Int. Cl.⁶ A61B *17/00*

U.S. Cl. 606—198 **23 Claims**

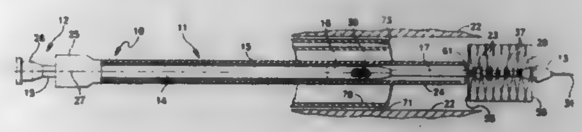

1. A stent delivery system for transporting and deploying an expansible stent, said stent delivery system comprising:

A) delivery means for positioning the stent at a selected position in the patient's body, said delivery means including a sheath normally overlying the stent in its compact transport form and an inner core having a surface normally underlying the stent in its compact transport form, and

B) deployment means for selectively deploying and retracting the stent relative to said sheath, said deployment means including a ring attached to and extending radially from the surface of said inner core to be intermediate the inner core and the stent for engaging the stent in its compact condition.

5,702,419

EXPANDABLE, INTRALUMINAL STENTS

Joel L. Berry; Carlos M. Ferrario; Richard H. Dean, and Virginia S. Newman, all of Winston-Salem, N.C., assignors to Wake Forest University, Winston-Salem, N.C.

Filed Sep. 21, 1994, Ser. No. 309,359

Int. Cl.⁶ A61M *29/00*

U.S. Cl. 606—198 **68 Claims**

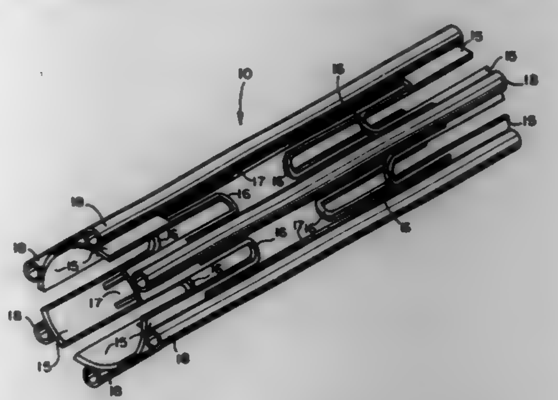

41. An expandable intraluminal stent comprising a generally thin-walled tubular structure having first and second ends and a central lumen, the tubular structure having a thin-walled lattice frame with openings in the frame, each of the openings extending longitudinally at least half the length of the tubular structure, the tubular structure being deformable from a first smaller diameter into a second enlarged diameter, the tubular structure including rigid components and deformable components interconnecting the rigid components, the deformable components deforming to enable the tubular structure to expand from the first smaller diameter into the second larger diameter, the rigid components including a plurality of rigid end supports disposed in a ring at each end of the tubular stent, the end supports in each ring being generally uniformly spaced apart around each respective ring, wherein the rigid components include a plurality of rigid struts for connecting the ring of end supports at one end of the stent with the ring of end supports at the other end of the stent to inhibit relative longitudinal displacement between the rings of end supports at opposite ends of the stent.

5,702,420

MOTORIZED SUCTION PUNCH FORCEPS

Anthony P. Sterling, Wolcott, and Albert Palmero, Middlefield, both of Conn., assignors to Anthony R. Sterling and Tri-tech, Inc., Waterbury, Conn.

Continuation of Ser. No. 259,448, Jun. 14, 1994, abandoned. This application Jan. 26, 1996, Ser. No. 592,623

Int. Cl.⁶ A61B *17/28*

U.S. Cl. 606—205 **3 Claims**

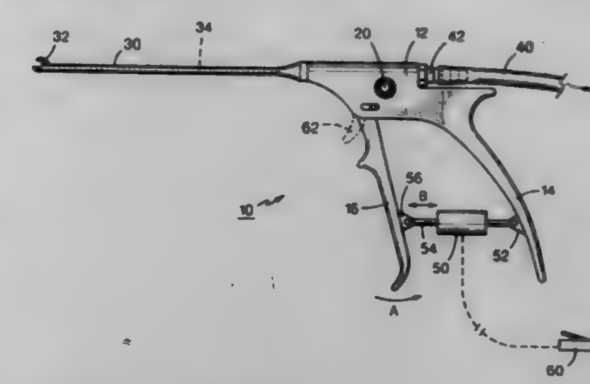

1. A suction punch forceps, comprising:

(a) a body;

(b) a hollow tube attached to said body at a proximal end of said hollow tube and extending from said body;

(c) a drive shaft disposed within said hollow tube for axial back-and-forth movement therein;

(d) an electric motor attached to said drive shaft to drive said drive shaft in back-and-forth movement;

(e) means for rotatably attaching a punch member to said distal end of said hollow tube and attached to said drive shaft such that each back-and-forth movement cycle of said shaft will cause said punch member to make a cutting motion to cut tissue which is in contact with said punch member;

(f) a first handle fixedly attached to said body and extending therefrom;

(g) a second handle rotatably attached to said body and extending therefrom, a distal end of said second handle being rotatable toward and away from said first handle and means for operatively attaching said second handle to said drive shaft to cause said back-and-forth movement thereof when said second handle is rotated toward and away from said first handle; and

(h) said electric motor is attached between said first and second handles to cause said rotation of said second handle toward and away from said first handle.

5,702,421

CLOSURE DEVICE FOR CLOSING A VASCULAR OPENING, SUCH AS PATENT DUCTUS ARTERIOSUS

Bernhard Schneidt, Johanniter Strasse 14, 63571 Gelnhausen, Germany

Filed Jan. 11, 1996, Ser. No. 585,114

Claims priority, application Germany, Jan. 11, 1995, 295 00 381.2 U; European Pat. Off., Aug. 24, 1995, 95113341.2

Int. Cl.⁶ A61B *17/08*

U.S. Cl. 606—213 **12 Claims**

12. A closure device (10, 42) for closing an anatomical anomaly in the form of a vascular opening (80), such as patent ductus arteriosus, atrial septal defect, foramen ovale or ventricular septal defect, a closure body (14, 94, 168, 184) for extending at least within the vascular opening, and wirelike, elastic locking means (30, 32, 34) extending outside the vascular opening, which locking means are provided with spherical or lentiform elements (40) on their free ends characterized in that:

the locking means (30, 32, 34) being positionally fixed with the closure body (94, 168) on the face end by suturing or extend entirely or nearly entirely within the closure body (202);

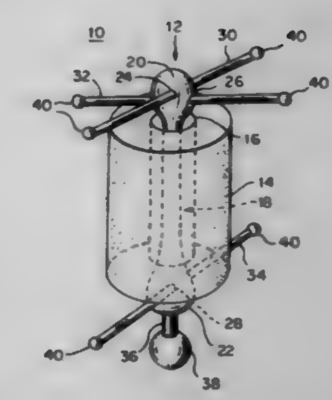

the locking means (30, 32, 34) being joined via a middle part (18, 46, 148, 150, 182, 194), which extends in the axial direction of the closure body (40, 46, 94, 96, 168) and in its axial length has a formed-on feature (38, 58, 158, 186) that upon implantation of the closure device (10, 42, 180, 188, 200) can be grasped by guide tongs (74) extending inside a catheter (72); and

wherein the middle part (18, 46, 148, 150, 194), on its end regions is provided with reinforcement means (20, 22, 48, 50, 152, 158, 196, 198) to which the locking means (30, 32, 34) are fastened.

5,702,422

ANTERIOR CRUCIATE LIGAMENT REPAIR METHOD

Kevin R. Stone, 1 Throckmorton La., Mill Valley, Calif. 94941

Filed Dec. 6, 1995, Ser. No. 567,895

Int. Cl.⁶ A61B *17/00*

U.S. Cl. 606—232 **15 Claims**

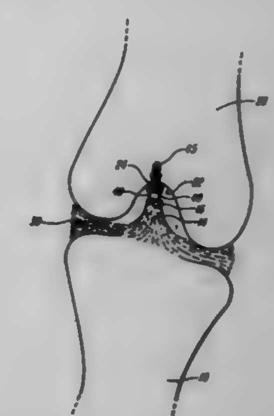

1. A method of repairing a rupture in an anterior cruciate ligament of a knee, said ruptured ligament having a tibial portion extending from an insertion site on the tibia of said knee to a tibial distal tip, and said ligament further having a femoral portion extending from an insertion site on the femoral intercondylar notch of said knee to a femoral distal tip, comprising steps of:

A. establishing an access portal in said knee to expose said ligament and said notch,

B. creating a bleeding bed within cancellous bone located in a portion of said notch corresponding substantially to said insertion site thereon,

C. passing one or more sutures through a region of said tibial portion near said tibial distal tip,

D. affixing a suture anchor to said notch at said bleeding bed, and

E. attaching said sutures to said suture anchor, wherein said tibial distal tip is operatively coupled to said insertion site of said notch.

5,702,423

TESTING DEVICE IN A LOW-VOLTAGE, LOW-FREQUENCY BEAUTIFYING APPARATUS FOR DETECTING LEAD CORD DISCONTINUITIES

Kumiko Hajimaki, Kitakatsushika-gun, Japan, assignor to Mesotes Co. Ltd., Chiba, Japan

PCT No. PCT/JP95/01869, § 371 Date Jun. 3, 1996, § 102(e) Date Jun. 3, 1996, PCT Pub. No. WO96/10438, PCT Pub. Date Apr. 11, 1996

PCT Filed Sep. 20, 1995, Ser. No. 652,539

Claims priority, application Japan, Oct. 3, 1994, 6-013298 U

Int. Cl.^{6} A61N *1/00*

U.S. Cl. 607—2 **16 Claims**

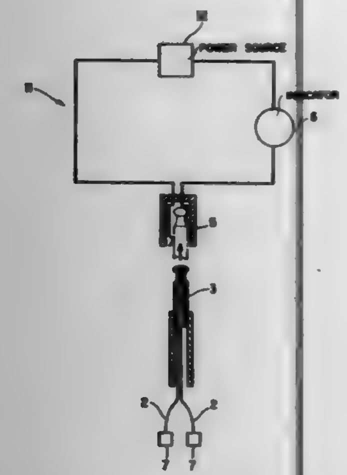

1. A disconnection checker of lead cords in low-voltage output type low-frequency beautifying apparatuses which carry out beautification by attaching two leads to a human body, which leads are connected to a lead cord, and passing low-voltage and low-frequency current through the leads, said disconnection checker comprising:

a terminal for checking disconnection arranged in a main body of said low-voltage output type low-frequency beautifying apparatus;

a power source for supplying power to said terminal; and

indicator means connected to said terminal for indicating disconnection, wherein whether the lead cord is disconnected or not is known from indication of said indicator means when a jack of said lead cord is inserted into said terminal for checking disconnection and said two leads connected to said lead cord are short-circuited.

5,702,424

METHOD AND APPARATUS FOR CONTROLLING THE CHANGE OF AN ESCAPE INTERVAL IN AN ACTIVE IMPLANTABLE MEDICAL DEVICE

Thierry Legay, Fontenay Les Brils; Jean-Luc Bonnet, Vanves, and Laurence Geroux, Plessis Robinson, all of France, assignors to ELA Medical S.A., Montrouge, France

Filed May 31, 1996, Ser. No. 657,802

Claims priority, application France, May 31, 1995, 95 06476

Int. Cl.^{6} A61N *1/362*

U.S. Cl. 607—9 **40 Claims**

1. An active implantable medical device to be borne by a patient comprising:

means for detecting an instantaneous cardiac rhythm of the patient,

means for delivering stimulation pulses having an escape interval (EIn) between successive delivered stimulation pulses, and

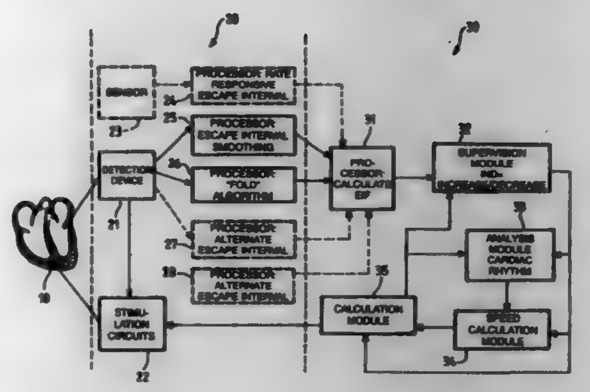

means for gradually increasing said escape interval comprising means for memorizing information corresponding to a plurality of successive detected instantaneous cardiac rhythms, wherein the gradually increasing means is operated to increase a given escape interval by a variable amount that is a first function of previously memorized information of the detected cardiac rhythm.

5,702,425

APPARATUS AND METHOD OF NOISE CLASSIFICATION IN AN IMPLANTABLE CARDIAC DEVICE

Peter John Wickham, Fivedock, Australia, assignor to Pacesetter, Inc., Sylmar, Calif.

Filed Aug. 13, 1996, Ser. No. 700,730

Int. Cl.^{6} A61N *1/362*

U.S. Cl. 607—9 **11 Claims**

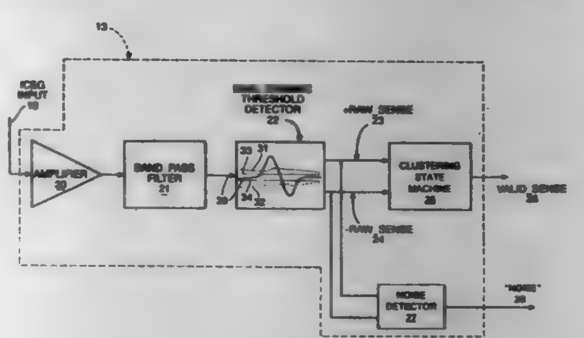

1. An implantable cardiac device comprising:

means for sensing cardiac activity from a patient's heart to generate an input signal;

means for generating pacing signals for said heart;

means for defining a range for said input signal, said means for defining said range including means for changing said range dynamically in response to changes in the magnitude of said input signal;

means for processing said input signal to generate raw sense signals indicative excursions of said input outside said range;

means for generating a noise indication signal based on said raw sense signals to indicate that said input signal has a large noise component; and

means for controlling said means for generating said pacing signals based on said noise signal.

5,702,426

AUTOMATIC ADJUSTMENT OF ELECTRICAL SIGNAL PARAMETERS

Pascal Pons, Fontaine, and Renzo Dal Molin, Chatillon, both of France, assignors to ELA Medical S.A., Montrouge, France

Filed Nov. 16, 1995, Ser. No. 558,435

Claims priority, application France, Nov. 16, 1994, 94 13696

Int. Cl.^{6} A61N *1/02*

U.S. Cl. 607—27 **26 Claims**

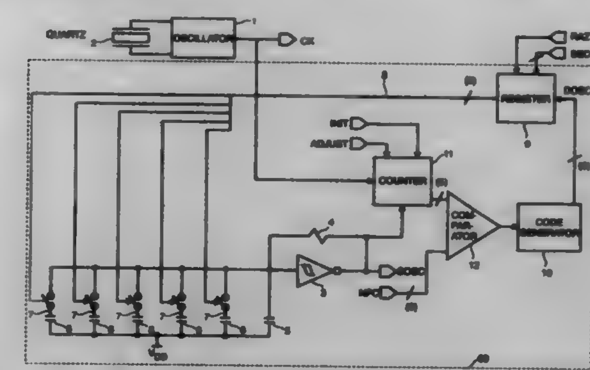

1. A process for adjusting an electrical parameter of an active implantable medical device having a memory register, at least one adjustable component and a plurality of additional components, comprising:

(a) (i) providing a first digital value, selected from between a minimum digital value and a maximum digital value (ii) preserving said first digital value in the memory register of said active implantable medical device;

(b) (i) selecting at least one of said plurality of additional components as a function of said preserved first digital value, (ii) commuting said at least one selected additional component to said at least one adjustable component;

(c) producing an oscillation having a period that is a function of a value of the at least one adjustable component commuted to said at least one selected additional component;

(d) measuring a relationship between the oscillation period produced at step (c) and a period of a predetermined reference value;

(e) determining a difference between the relationship measured at step (d) and a predetermined control value;

(f) modifying the first digital value preserved in the memory register between the minimum digital value and the maximum digital value and repeating steps (b)–(f) until determining in step (e) a minimum difference value; and

(g) latching the memory register to the modified first digital value preserved in the memory register in response to determining said minimum difference value, thereby adjusting said electrical parameter.

5,702,427

VERIFICATION OF CAPTURE USING PRESSURE WAVES TRANSMITTED THROUGH A PACING LEAD

Robert M. Ecker, Anoka; Lawrence C. McClure, Maple Grove, and John D. Wahlstrand, Shoreview, all of Minn., assignors to Medtronic, Inc., Minneapolis, Minn.

Filed Mar. 28, 1996, Ser. No. 623,443

Int. Cl.^{6} A61N *1/375; 1/365*

U.S. Cl. 607—28 **18 Claims**

1. In a cardiac pacemaker, a system for verifying capture of the heart following delivery of a pacing pulse comprising:

a pacing lead comprising:

an elongated lead body extending between a proximal connector end and a distal end adapted to be placed in association with the heart such that a pressure wave in the heart caused by the depolarization of the heart is transmitted through said lead body to said proximal connector end;

a pace/sense electrode at the distal end of said lead body; and

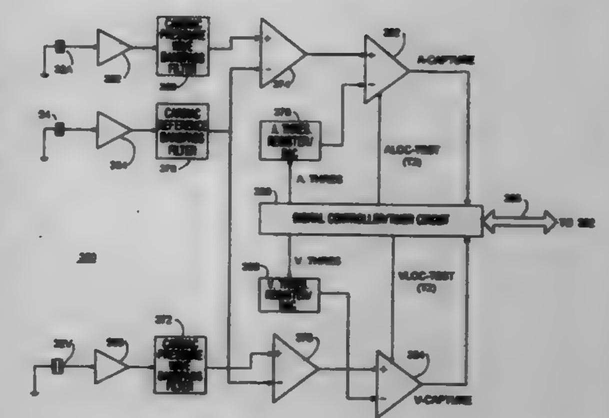

a pacing lead conductor extending between said proximal connector end and said pace/sense electrode for conducting pacing pulses from said proximal connector end to said pace/sense electrode; and

a cardiac pacemaker pulse generator comprising:

a connector assembly for attachment with said proximal connector end, said connector assembly having a pressure wave detection transducer mounted therein in relation to said proximal connector end for detecting said pressure wave and providing a heart pressure wave signal representative thereof;

pulse generator means for generating and delivering a pacing pulse through said connector assembly and said proximal connector end connected thereto to said pacing electrode;

means for timing a capture detection time window following generation of a pacing pulse; and

means coupled to said pressure wave detection transducer for determining capture of the heart by a delivered pacing pulse in response to a heart pressure signal provided by said pressure wave detection transducer within said capture detection time window.

5,702,428

ELECTRICAL STIMULATION FOR TREATMENT OF INCONTINENCE AND OTHER NEURO-MUSCULAR DISORDERS

Keith Edward Tippey, Knaresborough, United Kingdom, and Jens Axelgaard, Fallbrook, Calif., assignors to Axelgaard Manufacturing Company, Ltd., Fallbrook, Calif.

Division of Ser. No. 335,750, Nov. 8, 1994, Pat. No. 5,562,717. This application Aug. 1, 1996, Ser. No. 694,458

Claims priority, application United Kingdom, May 23, 1992, 9211085

Int. Cl.^{6} A61N *1/32*

U.S. Cl. 607—41 **3 Claims**

1. A sacral surface electrode for application of electrical stimulation to patients suffering from incontinence, said sacral electrode comprising:

a conductive material;

means, defining a shape of said conductive material, for fitting said sacral electrode to a surface sacral region of said patients for stimulating nerves in the sacral region wherein said conductive material has a shape of a generally truncated triangle and wherein the conductive material includes an apex plateau region and means, defining a dipped portion, for facilitating finger placement of the sacral surface electrode over the sacral region; and

means for connecting said conductive material to a source of electrical stimulation pulses.

5,702,429
NEURAL STIMULATION TECHNIQUES WITH FEEDBACK
Gary William King, Fridley, Minn., assignor to Medtronic, Inc., Minneapolis, Minn.
Filed Apr. 4, 1996, Ser. No. 628,020
Int. Cl.⁶ A61N *1/18; 1/05*
U.S. Cl. 607—46 **15 Claims**

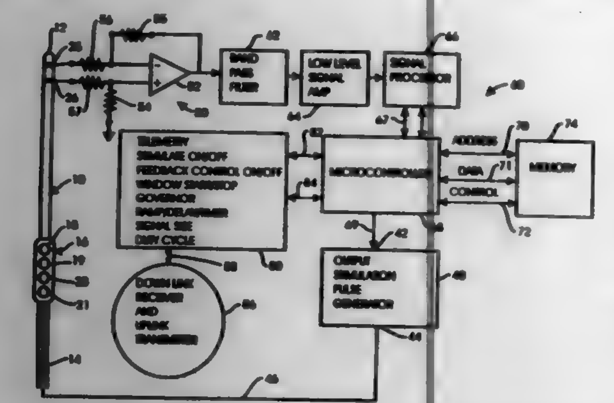

1. Apparatus for automatically adjusting action potentials generated in electrically excitable tissue of a living organism by electrical stimulation of said tissue, said apparatus comprising:

a stimulation driver for generating in response to a control signal a stimulation pulse having a pulse period and an amplitude;
stimulation electrode means for coupling said stimulation pulse to said tissue, wherein at least one of said pulse period and said amplitude determines said action potentials generated in said tissue;
recording electrode means displaced from said stimulation electrode means by a predetermined distance for receiving said action potentials transmitted by said tissue;
an amplifier for generating a processing signal responsive to said action potentials received by said recording electrode means; and
a controller for generating said control signal in response to said processing signal, said control signal being adapted for use by said stimulation driver to adjust at least one of said pulse period and said amplitude to maintain said action potentials generated in said tissue at substantially a predetermined action potential level that results in reduced pain experienced by said living organism uniformly with time, wherein said controller comprises means for integrating said processing signal over a predetermined time period beginning at a predetermined time in generating said control signal.

5,702,430
SURGICALLY IMPLANTABLE POWER SUPPLY
Carl O. Larson, Jr., Stonington; James S. Smith, Old Lyme; John H. Chapman, Groton; Scot A. Slimon, Mystic; Trahan D. John, No. Stonington, all of Conn.; J. Brozek Robert, Bridgewater, N.J.; Alberto Franco, Hazlet, N.J.; John J. McGarvey; Marvin E. Rosen, both of Elizabeth, N.J., and Michael K. Pasque, St. Louis, Mo., assignors to Electric Boat Corporation, Groton, Conn.
Division of Ser. No. 201,806, Feb. 25, 1994, Pat. No. 5,676,651, which is a continuation-in-part of Ser. No. 35,788, Mar. 23, 1993, Pat. No. 5,290,227, which is a continuation-in-part of Ser. No. 926,779, Aug. 6, 1992, abandoned. This application Jun. 7, 1995, Ser. No. 477,907
Int. Cl.⁶ A61N *1/05*
U.S. Cl. 607—1 **2 Claims**

1. A surgically implantable power supply comprising battery means for providing a source of power, charging means for charging the battery means, enclosure means isolating the battery means from the human body, gas holding means within the enclosure means for holding gas generated by the battery means during

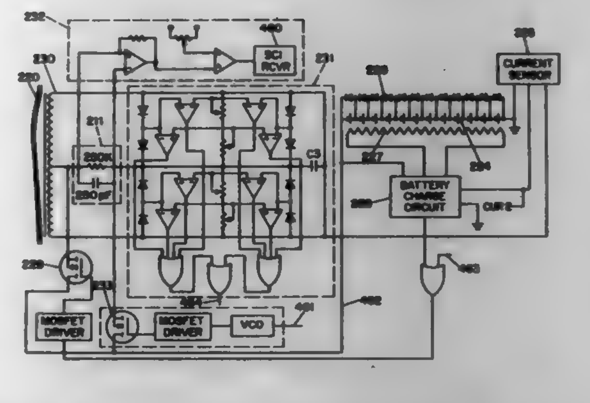

charging, seal means in the enclosure means arranged to rapture when the internal gas pressure exceeds a certain value and inflatable gas container means outside the enclosure means to receive gas from within the enclosure means when the seal means has been ruptured.

5,702,431
ENHANCED TRANSCUTANEOUS RECHARGING SYSTEM FOR BATTERY POWERED IMPLANTABLE MEDICAL DEVICE
Xintao Wang, Houston, Tex., and Jennifer L. Hay, Knoxville, Tenn., assignors to Sulzer Intermedics Inc., Angleton, Tex.
Continuation-in-part of Ser. No. 482,786, Jun. 7, 1995. This application Sep. 17, 1996, Ser. No. 710,449
Int. Cl.⁶ A61N *1/02*
U.S. Cl. 607—61 **5 Claims**

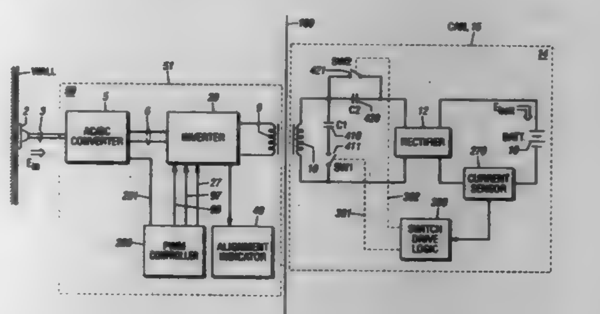

1. A transcutaneous energy transmission system for transmitting electrical energy from an external charging device to an implantable medical device for providing power to said implantable medical device to charge a battery in said implantable medical device, said transcutaneous energy transfer system comprising:

an external charging device containing:
a primary coil in said external charger for transmitting said power transcutaneously to said medical implantable device;
a capacitor in said external charger coupled to said primary coil, said primary coil and said capacitor forming a resonant circuit;
a controller for controlling the power provided to said resonant circuit;
an implantable medical device containing:
a secondary coil in said implantable medical device;
a first capacitor connected in series to a first switch, the combination of the first capacitor and first switch connected in parallel across said secondary coil;
a second capacitor connected to said secondary coil;
a second switch connected in parallel across said second capacitor, and
a battery wherein the battery connects to said second capacitor and said second switch.

5,702,432
INTRACORPOREAL LIGHT TREATMENT OF BLOOD
James C. Chen, Bellevue, Wash., and Brent Wiscombe, Mesa, Ariz., assignors to Light Sciences Limited Partnership, Redmond, Wash.
Filed Oct. 3, 1996, Ser. No. 725,578
Int. Cl.⁶ A61N *00/00*
U.S. Cl. 607—88 **26 Claims**

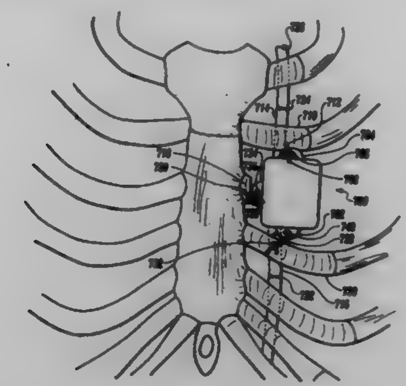

1. Apparatus for administering intracorporeal photopheresis to blood flowing in a patient's body to destroy or affect an undesirable component in the blood, where the undesirable component has absorbed a photoreactive agent having a characteristic light absorption waveband, said apparatus comprising:

(a) an implantable housing adapted to be transcutaneously placed at a site within a patient's body, said implantable housing comprising a biocompatible material and having an inlet port and an outlet port adapted to couple to a patient's circulatory system to convey the blood circulated thereby into and out of the housing;
(b) a light source coupled to the housing, said light source emitting light within a waveband substantially equal to the absorption waveband of the photoreactive agent;
(c) a power source for supplying an electrical current to energize said light source; and
(d) a fluid path disposed within the housing adjacent to the light source and in fluid communication with said inlet port and said outlet port, at least a portion of said fluid path being optically transparent, so that blood circulating through the fluid path is irradiated with the light emitted by said light source to effect the light treatment, said blood circulating through the fluid path sufficiently fast to avoid heat build up that might otherwise harm the blood.

5,702,433
KINK-RESISTANT STEERABLE CATHETER ASSEMBLY FOR MICROWAVE ABLATION
Kevin Taylor, Reading; Philip F. Latzgo, Etters, and Timothy J. Lenihan, Reading, all of Pa., assignors to Arrow International Investment Corp., Wilmington, Del.
Continuation-in-part of Ser. No. 495,356, Jun. 27, 1995, abandoned. This application Sep. 27, 1995, Ser. No. 534,345
Int. Cl.⁶ A61F *2/00*
U.S. Cl. 607—101 **11 Claims**

1. A kink-resistant steerable catheter assembly comprising:
(A) a handle;
(B) a catheter having (a) a flexible, torque-transmitting and axially incompressible proximal or body portion terminating in a proximal end attached to said handle, and (b) a flexible and axially compressible distal or tip portion terminating in a distal end;
(a) said proximal portion of said catheter including:
(i) an outer extrusion formed of a thin-walled, resilient tubing,
(ii) torque-transmitting means for transmitting torque along said catheter proximal portion,

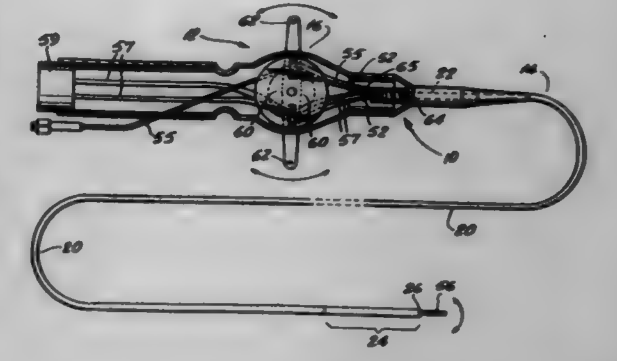

(iii) axially incompressible means for precluding both compression and kinking of said catheter proximal portion,
(iv) a large aperture extending through said catheter proximal portion,
(v) at least a pair of relatively small flexible shafts, each said small shaft extending through said large aperture and defining a relatively small lumen,
(vi) a coaxial cable disposed in and extending through said large aperture, and
(vii) a pair of steering wires, each of said steering wires extending through a respective one of said small lumens, and having a proximal end exiting a proximal end of said respective small lumen and entering said handle; and
(b) said distal portion of said catheter including:
(i) an outer extrusion extension formed of a resilient tubing,
(ii) stiffly resilient biasing means for biasing said catheter distal portion to its home orientation and resisting kinking of said catheter distal portion,
(iii) a large lumen through said catheter distal portion defined by said stiff biasing means,
(iv) at least a pair of relatively small lumen extensions defined by said outer extrusion extension,
(v) a coaxial cable extension generally centrally disposed in, and substantially filling, and snugly extending through said large lumen, and
(vi) a pair of steering wire extensions, each of said steering wire extensions extending through a respective one of said small lumen extensions, and having a distal end attached to said cable extension adjacent a distal end thereof; and
(C) controller means, disposed in and actuatable from said handle, for placing tension on one of said steering wires while relaxing tension on the other of said steering wires, thereby to bend said distal end of said coaxial cable toward said tensed one of said steering wires.

5,702,434

Patent Not Issued For This Number

5,702,435
FAST CHANGING HEATING-COOLING DEVICE AND METHOD
Ben-Zion Maytal, Atlit, Israel, assignor to State Of Israel Ministry Of Defense, Rafael-Armaments, Israel
Continuation of Ser. No. 178,510, Jan. 7, 1994, Pat. No. 5,522,870. This application Feb. 9, 1996, Ser. No. 599,630
Claims priority, application Israel, Jan. 25, 1993, 104506
Int. Cl.⁶ A61F *7/00*
U.S. Cl. 607—104 **36 Claims**

1. A surgical probe having a surface to be brought into contact with cells and/or tissue of a living organism, said surface being capable of being cooled and/or heated and being capable of undergoing fast temperature changes, the fast-changing temperature

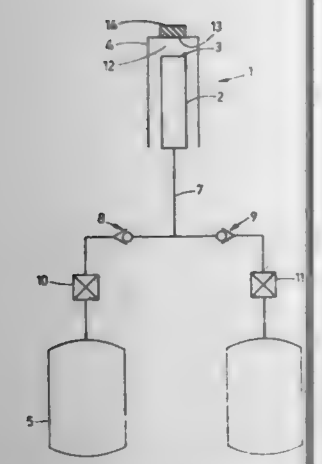

changing from above room temperature to below about −50° C. and vice versa, and the fast-changing temperature changing from above to below about 0° C. and vice versa at a sub-minute speed, said probe comprising:
a heat exchanger coupled to an orifice, the orifice opening into a jacket;
the jacket being in contact with the surface that is heated and/or cooled, the jacket forming a reservoir capable of housing a fluid in contact with the surface that is heated and/or cooled;
two gas sources providing two gases, a first and a second gas, each of the two gas sources being independently connected to the heat exchanger, the first gas liquifying when expanding through the orifice, the second gas having an inversion temperature lower than a temperature obtained by liquification of the first gas; and
means for allowing and stopping a flow of each of the two gases through the orifice.

5,702,436

Patent Not Issued For This Number

5,702,437
IMPLANTABLE LEAD WITH WIRES CARRIED BY BODY
Michael D. Baudino, Coon Rapids, Minn., assignor to Medtronic Inc., Minneapolis, Minn.
Filed Apr. 10, 1996, Ser. No. 630,442
Int. Cl.⁶ A61N *1/05*
U.S. Cl. 607—116 **19 Claims**

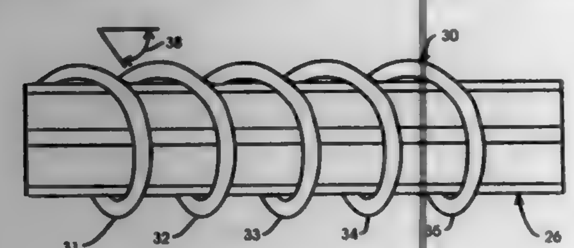

1. An implantable lead comprising:
a body defining an uneven outer surface;
wire carried by said outer surface to form convolutions arranged so that portions of each convolution are displaced from said outer surface; and
an outer covering located around said body and wire, whereby said body provides sufficient stiffness for implantation so that said wire can be selected for improved flex fatigue life.

5,702,438
EXPANDABLE RECORDING AND ABLATION CATHETER SYSTEM
Boaz Avitall, 4868 N. Ardmore Ave., Milwaukee, Wis. 53217
Filed Jun. 8, 1995, Ser. No. 482,675
Int. Cl.⁶ A61N *1/00*
U.S. Cl. 607—122 **26 Claims**

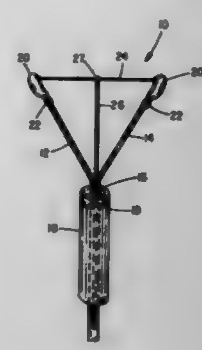

1. An expandable electroded system for recording and ablation designed to traverse a lumen of an elongated outer catheter or sheath and expand upon emergence from an opening in the distal end thereof comprising a pair of proximally constrained diverging spines, said spines being sufficiently rigid to maintain a predisposed shape but adapted to be deflected by the walls of a chamber in which they are deployed, having distal tips free to separate as independent elements, the spines separating to form the shape of a "V" upon expansion and at least one ablation electrode, located on the distal tip of each spine, said system further comprising at least one resilient spine connecting member joining said pair of spines stabilizing and limiting the separation thereof.

5,702,439
BALLOON CATHETER WITH DISTAL GUIDE WIRE LUMEN
Peter T. Keith, Fridley, and Charles L. Euteneuer, St. Michael, both of Minn., assignors to SciMed Life Systems, Inc., Maple Grove, Minn.
Continuation of Ser. No. 521,460, Aug. 30, 1995, Pat. No. 5,522,818, which is a continuation of Ser. No. 344,931, Nov. 23, 1994, abandoned, which is a continuation of Ser. No. 35,254, Mar. 22, 1993, Pat. No. 5,395,334, which is a continuation of Ser. No. 792,786, Nov. 15, 1991, Pat. No. 5,217,482, which is a continuation of Ser. No. 574,265, Aug. 28, 1990, Pat. No. 5,156,594. This application May 30, 1996, Ser. No. 657,013
Int. Cl.⁶ A61M *29/00*
U.S. Cl. 604—96 **20 Claims**

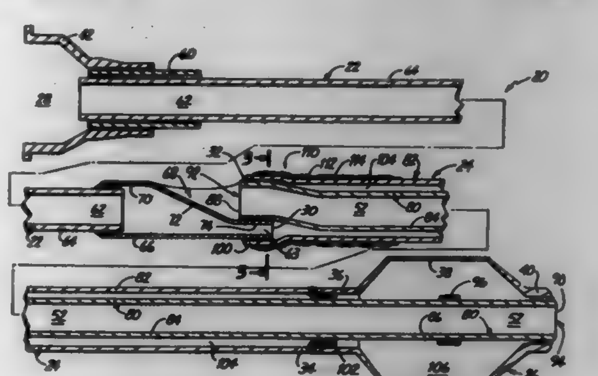

1. A balloon catheter, comprising:
a shaft having a proximal end and a distal end, the shaft including a first tube having a proximal end and a distal end, and further having a first lumen extending longitudinally

therethrough, the shaft including a second tube having a proximal end and a distal end, the second tube extending distally from the first tube, with the second tube being more flexible than the first tube, the second tube having a second lumen extending longitudinally therethrough and in fluid communication with the first lumen, the first and second lumens defining an inflation lumen;
a dilatation balloon disposed proximate the distal end of the shaft, the dilatation balloon being in fluid communication with the inflation lumen such that inflation pressure may be provided to the balloon therethrough;
a guidewire tube defining a guidewire lumen, shorter than the inflation lumen, and extending from a proximal lumen opening proximal to the balloon to a distal lumen opening distal to the balloon; and
a strain relief member having a proximal end and a distal end, the strain relief member extending from the first tube to the second tube, wherein the proximal end of the strain relief member is connected to the first tube proximate the distal end of the first tube and extends into the proximal end of the second tube.

5,702,440
MULTIFOCAL OPHTHALMIC LENS FOR DIM-LIGHTING CONDITIONS
Valdemar Portney, Irvine, Calif., assignor to Allergan, Waco, Tex.
Filed Jan. 26, 1996, Ser. No. 592,752
Int. Cl.⁶ A61F *2/14;2/16*
U.S. Cl. 623—5 **20 Claims**

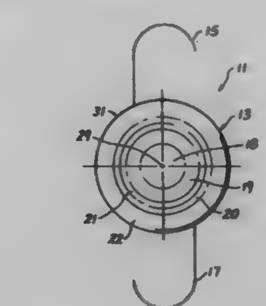

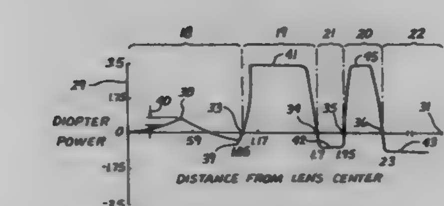

1. A multifocal ophthalmic lens for providing vision correction powers, the multifocal ophthalmic lens being adapted to be implanted in an eye or to be disposed in a cornea and having a baseline diopter power for far vision correction, the multifocal ophthalmic lens comprising:
a central zone having a vision correction power approximately equal to or greater than the baseline diopter power, the central zone having a progressive power region in which the vision correction powers vary progressively;
a first outer zone located radially outwardly of the central zone and having a vision correction power greater than the baseline diopter power; and
a second outer zone located radially outwardly of the first outer zone and having a substantially constant diopter power, which is less than the baseline diopter power.

5,702,441
METHOD FOR RAPID IMPLANTATION OF SHAPE TRANSFORMABLE OPTICAL LENSES
Stephen Q. Zhou, Hacienda Heights, Calif., assignor to Kabi Pharmacia Ophthalmics, Inc., Monrovia, Calif.
Continuation of Ser. No. 194,079, Feb. 9, 1994, abandoned. This application Feb. 28, 1996, Ser. No. 607,417
Int. Cl.⁶ A61F *2/16*
U.S. Cl. 623—6 **26 Claims**

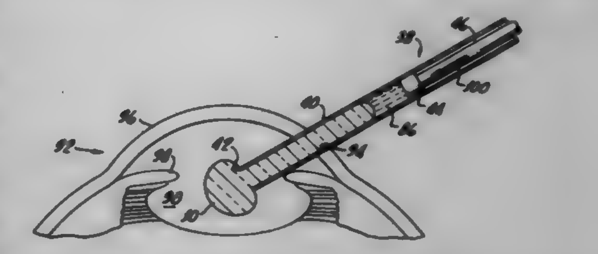

1. A method for performing lens replacement in an eye, the method comprising the steps of:
providing a shape-transformable optical lens capable of substantial recoverable deformation in all dimensions and formed of an optically transparent material having a tensile strength of less than about 70 MPa, an elastic modulus of less than 3,000 MPa, an elongation at break of greater than 100%, and a Durometer Shore A hardness of less than about 100;
loading said shape-transformable lens into a lens ejector having a small-diameter, elongate, generally tubular outlet configured to receive said shape-transformable optical lens in sliding sealing engagement;
inserting said small-diameter, elongate, generally tubular outlet into the eye;
positioning said small-diameter, elongate, generally tubular outlet at a target site within the eye; and
ejecting said shape-transformable optical lens through said small-diameter, elongate, generally tubular outlet at the target site within the eye.

5,702,442

Patent Not Issued For This Number

5,702,443
ANCHORING ELEMENT FOR IMPLANTATION IN TISSUE, FOR HOLDING PROSTHESES, ARTIFICIAL JOINT COMPONENTS OR THE LIKE
Per-Ingvar Brånemark, Molndal, Sweden, assignor to Medevelop AB, Gothenburg, Sweden
Division of Ser. No. 233,311, Apr. 26, 1994, abandoned. This application Jun. 5, 1995, Ser. No. 463,976
Claims priority, application Sweden, Apr. 27, 1993, 9301407
Int. Cl.⁶ A61F *2/02*
U.S. Cl. 623—11 **9 Claims**

1. An anchoring element formed of a tissue compatible material

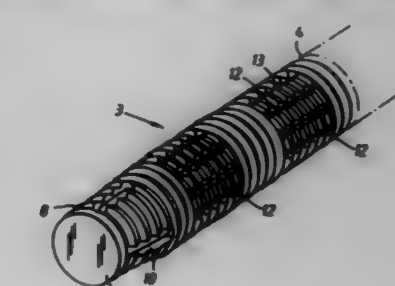

for extended prosthetic implantation in tissue comprising:

a body of a generally rotationally symmetrical form having a central axis, the anchoring element having an outer peripheral surface provided with a screw thread having a thread crest, the thread crest being rounded in profile, and wherein a notch is formed across at least one turn of the screw thread for tissue growth into the notch when the anchoring element is implanted in the tissue, said notch dividing the thread into thread sections having lengths, the notch forming a key to inhibit rotation of the anchoring element in the tissue, the notch extending parallel with the axis of the anchoring element, and the width of the notch in the direction of the thread being substantially smaller than the length of each thread section.

5,702,444
IMPLANTABLE ARTIFICIAL ENDOCRINE PANCREAS
Ralph C. Struthers, Saugus, Calif., and Devendra V. Mehta, Bloomfield Hills, Mich., assignors to Struthers, Mehta and Maxwell
Filed Sep. 11, 1995, Ser. No. 526,075
Int. Cl.^{6} C12N *11/10*
U.S. Cl. 623—11 **10 Claims**

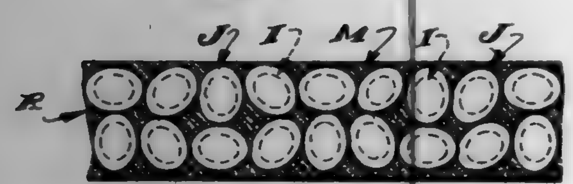

1. An implantable artificial endocrine pancreas device including a multiplicity of endocrine islets, a jacket of biocompatible, soft, plastic, hydratable porous material about each islet, the jackets about adjacent islets are in bridging contact with each other and support the islets in predetermined spaced relationship with each other, a matrix body of biocompatible, plastic, porous, hydratable material is formed about and between the jacketed islets and supports the jacketed islets in fixed position, a biocompatible barrier membrane structure is positioned in supporting engagement with exterior surfaces of the matrix and includes microporous material that excludes free diffusion and movement of materials the molecular size of which, is greater than 60,000 Daltons.

5,702,445
ANCHORING ELEMENT FOR IMPLANTATION IN TISSUE, FOR HOLDING PROSTHESES, ARTIFICIAL JOINT COMPONENTS OR THE LIKE
Per-Ingvar Brånemark, Molndal, Sweden, assignor to Medevelop AB, Gothenburg, Sweden
Continuation of Ser. No. 233,311, Apr. 26, 1994, abandoned. This application Dec. 21, 1995, Ser. No. 576,847
Claims priority, application Sweden, Apr. 27, 1993, 9301407
Int. Cl.^{6} A61F *2/02*
U.S. Cl. 623—11 **16 Claims**

1. A substantially cylindric anchoring element of tissue compatible material for extended prosthetic implantation in tissue, said element comprising:

a cylindrical portion having an axis and an outer cylindrical peripheral surface;

a spiral screw thread having a plurality of turns and projecting radially outward from said cylindrical peripheral surface for

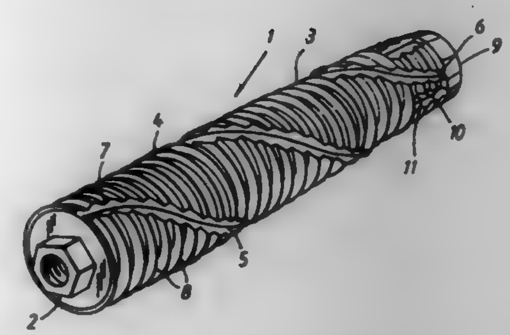

screwing insertion into a bore in tissue where said element is to be implanted, each of said turns being formed between an outer crest and a root disposed radially inward of said crest and coinciding with said cylindrical peripheral surface, the thread crests being rounded in profile, said thread having a thread-depth measured from said crest to said root; and

a rotation-inhibiting groove for receiving in-growing tissue in an implanted state of said element, said rotation-inhibiting groove having substantial axial extension along said cylindrical peripheral surface and intersecting at least one of said plurality of turns of said thread to form at least one notch such that the tissue grows into said notch forming a key to inhibit rotation of said anchoring element in the tissue, said notch dividing the thread into thread sections, said groove having a groove-depth equal essentially to said thread depth, the width of the groove in the direction of the thread being substantially smaller than the extension of each thread section, said groove having the form of a spiral having a first direction and said spiral screw thread having a second direction, said first direction of said spiral of said groove and said second direction of said spiral screw thread being the same.

5,702,446
BONE PROSTHESIS
Robert C. Schenck, Comfort, and C. Mauli Agrawal, San Antonio, both of Tex., assignors to Board of Regents, The University of Texas System, Austin, Tex.
Continuation of Ser. No. 973,033, Nov. 9, 1992, abandoned. This application Oct. 18, 1996, Ser. No. 734,626
Int. Cl.^{6} A61F *2/28*
U.S. Cl. 623—16 **8 Claims**

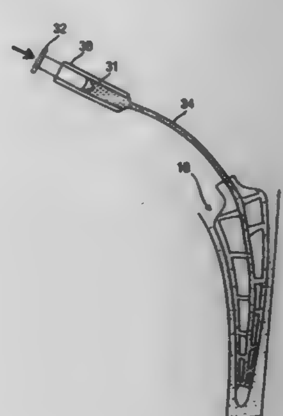

1. A bone prosthesis having a non-mating surface and a porous mesh bone-mating surface, at least one continuous hollow internal chamber, at least one branch channel extending from each chamber to the mating surface of the prosthesis, and a port hole at the non-mating surface through which fluid may be introduced into each internal chamber.

5,702,447
DEVICE FOR THE ATTACHMENT OF A GLENOID PROSTHESIS OF THE SHOULDER BLADE
Gilles Walch, Lyons, and Pascal Boileau, Nice, both of France, assignors to Tornier S.A., Saint-Ismier, France
Filed Nov. 27, 1996, Ser. No. 758,030
Claims priority, application France, Nov. 30, 1995, 95 14454
Int. Cl.^{6} A61F *2/28*
U.S. Cl. 623—16 **13 Claims**

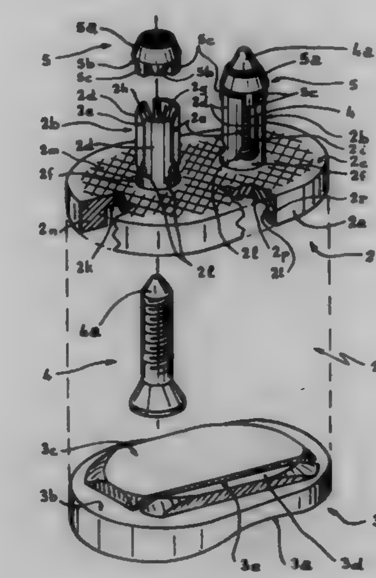

1. A device for fastening a prosthesis against the hard layer of a bone, comprising: a metal foundation including a plate and at least one anchoring pin consisting of elastically deformable wings surrounding an internal bore, at least one screw extending through said at least one anchoring pin, a nut adjustable along said at least one screw to spread said wings into a position away from a longitudinal axis of said at least one anchoring pin, said at least one anchoring pin having a cylindrical base connecting said at least one anchoring pin to said plate, said at least one anchoring pin having a circular counter-bore adjacent said base and communicating with said internal bore and being of greater diameter than said internal bore, said counter-bore making it possible to spread said wings as said nut moves relative to said at least one screw while maintaining rigidity of said wings over their length.

5,702,448
PROSTHESIS WITH BIOLOGICALLY INERT WEAR RESISTANT SURFACE
Frederick F. Buechel, 61 First St., South Orange, N.J. 07079, and Michael J. Pappas, 61 Gould Pl., Caldwell, N.J. 07006
Continuation of Ser. No. 161,982, Dec. 2, 1993, abandoned, which is a continuation of Ser. No. 882,256, May 13, 1992, abandoned, which is a continuation-in-part of Ser. No. 583,459, Sep. 17, 1990, abandoned. This application Jul. 5, 1995, Ser. No. 498,112
Int. Cl.^{6} A61F *2/28*
U.S. Cl. 623—16 **21 Claims**

1. An orthopedic prosthesis formed from a metallic alloy and having at least one load bearing surface movably disposed adjacent to an opposed surface and at least one bone ingrowth surface, said prosthesis comprising a substrate formed from at least one selected metallic alloy and an abrasion resistant, biologically inert coating formed from a ceramic material harder than the substrate, said coating being ionically bonded to the substrate forming a unitary layer on portions of the prosthesis defining the load bearing surface

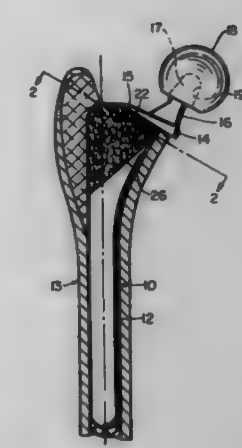

and portions of the prosthesis defining the bone ingrowth surface, said coating defining a thickness of 8–10 microns.

5,702,449
REINFORCED POROUS SPINAL IMPLANTS
William F. McKay, Memphis, Tenn., assignor to Danek Medical, Inc., Memphis, Tenn.
Filed Jun. 7, 1995, Ser. No. 485,842
Int. Cl.^{6} A61F *2/44*
U.S. Cl. 623—17 **26 Claims**

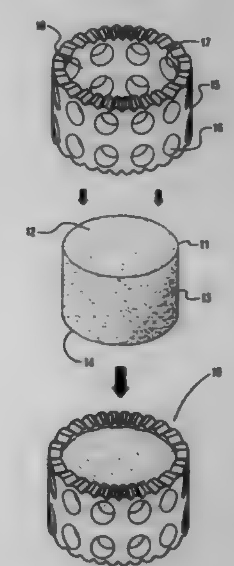

1. A spinal implant for engagement between vertebrae, comprising:

a body having two opposite faces and an outer surface disposed between said two faces, said body including a porous, biocompatible material for permitting tissue ingrowth therethrough, said body being sized and configured for engagement between two vertebrae; and

a sleeve disposed around said outer surface of said body, said sleeve including a second material relatively stronger under compressive loads than said porous, biocompatible material, wherein said sleeve has a height less than a height of said outer surface to permit contact of said opposite faces with endplates of the corresponding vertebrae when the implant is implanted between the vertebrae.

5,702,450
INTERVERTEBRAL DISK PROSTHESIS
Michel Bisserie, 54, rue du Faubourg Montmartre, Paris, France, 75009
PCT No. PCT/FR94/00774, § 371 Date Feb. 14, 1996, § 102(e) Date Feb. 14, 1996, PCT Pub. No. WO95/00082, PCT Pub. Date Jan. 5, 1995
PCT Filed Jun. 27, 1994, Ser. No. 578,675
Claims priority, application France, Jun. 28, 1993, 93 07855
Int. Cl.[6] A61F *2/44*
U.S. Cl. 623—17 **9 Claims**

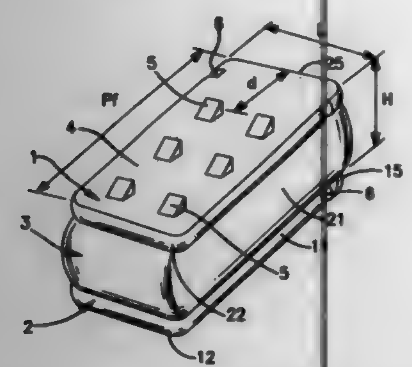

1. Intervertebral disk prosthesis designed to replace at least partially an intervertebral disk which is composed of a left half-disk and a right half-disk, each of said half-disks being sized to cover a half disk surface, said prosthesis including at least one prosthetic member, each of said at least one prosthetic member comprising a rigid upper plate, a rigid lower plate, an elastic cushion placed between the upper plate and the lower plate and containing an upper face attached to said upper plate and a lower face attached to said lower plate, and each of said at least one prosthetic member being sized to cover no more than said half-disk surface so as to replace one of said left half-disk and said right half-disk, wherein rear edges of said upper plate and said lower plate are straight and remaining edges of the upper plate and the lower plate are rounded at each side, and within their thickness.

5,702,451
SPACE HOLDER, IN PARTICULAR FOR A VERTEBRA OR AN INTERVERTEBRAL DISK
Lutz Biedermann, AM Schäfersteig 8, 78048 VS-Villingen, and Jürgen Harms, Vogesenstrasse 60, 76337 Waldbronn, both of Germany
Filed Dec. 29, 1995, Ser. No. 581,149
Claims priority, application Germany, Feb. 14, 1995, 195 04 867.9
Int. Cl.[6] A61F *2/44*
U.S. Cl. 623—17 **15 Claims**

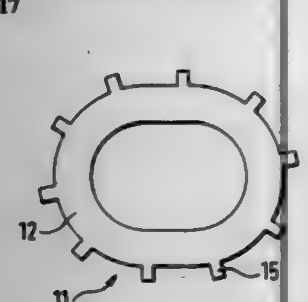

1. Space holder for use with a vertebra or an intervertebral disk, the space holder comprising
a jacket member comprising a hollow sleeve having an inner contour, an upper first edge, a lower second edge and apertures provided in said jacket,
adjacent recesses provided at said first and second edge, said recesses located along the circumference of one of said edges and extending towards an opposite edge, and
stop means comprising a stop member having an outer contour corresponding to said inner contour of said jacket member and comprising nose-shaped projections being provided at locations of said periphery corresponding to said recesses for engaging said recesses of said jacket.

5,702,452
SPINAL OSTEOSYNTHESIS DEVICE WITH MEDIAN HOOK AND VERTEBRAL ANCHORING SUPPORT
Claude Argenson; Ferdinand de Peretti, and Istvan Hovorka, all of Nice, France, assignors to Sofamor S.N.C., Paris, France
Filed Jan. 22, 1996, Ser. No. 589,849
Claims priority, application France, Jan. 23, 1995, 95 00732
Int. Cl.[6] A61F *2/44*
U.S. Cl. 623—17 **19 Claims**

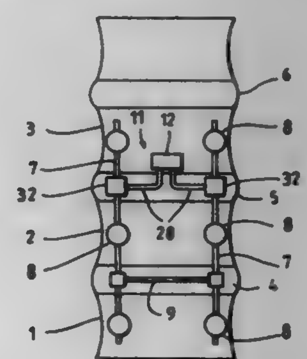

1. A spinal osteosynthesis device, comprising:
two longitudinal rods configured for fixation along opposite sides of a patient's spine;
a transverse connection means extending between said rods, said connection means being configured for placement over a vertebra of the patient's spine, said connection means including a hook and a pair of brackets engaging said rods to position said hook generally midway between said rods, said hook having a blade configured to engage a median portion of a vertebral posterior arch of the vertebra.

5,702,453
ADJUSTABLE VERTEBRAL BODY REPLACEMENT
Louis-Marie Rabbe, Mantoche, France; Lawrence M. Boyd, Memphis, Tenn.; Jean-Louis Chevalier, Merlimont-Plage, and Jean-Charles Moreau, Paris-Plage, both of France, assignors to Sofamor Danek Group, Memphis, Tenn.
Continuation of Ser. No. 353,566, Dec. 9, 1994, abandoned. This application May 13, 1996, Ser. No. 647,272
Int. Cl.[6] A61F *2/44*
U.S. Cl. 623—17 **10 Claims**

1. A vertebral replacement implant for interposition in a space left by one or more removed vertebrae between adjacent intact vertebrae, comprising:
a replacement body with opposite ends sized to span a portion of the space between the intact vertebrae, said replacement body having first threads defined thereon at each of said opposite ends;
a pair of endplates each having an end surface for contacting a respective one of the intact vertebrae when the implant is interposed in the space, each of said endplates having a cylindrical portion integrally extending from said end surface, said cylindrical portion having second threads defined thereon configured to threadedly engage the first threads on said

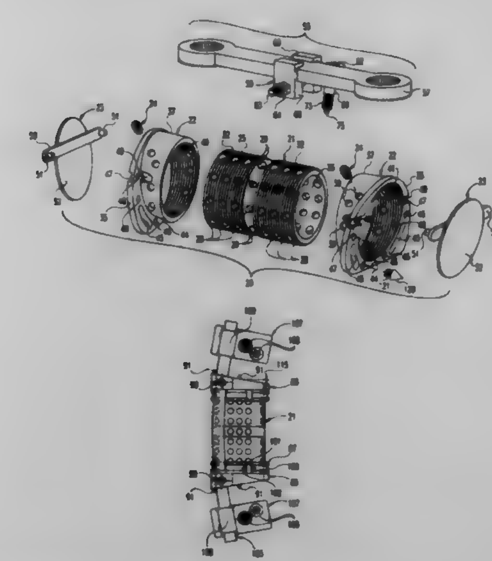

replacement body, and each of said endplates defining a bore therethrough opening at said end surface and at said cylindrical portion; and
an end cap for closing said bore of one of salad endplates at said end surface thereof, said end cap including;
a plate shaped to correspond to said bore opening in said endplate; and
a support bar attached to said plate;
wherein said endplate includes a slot defined at said end surface for receiving said support bar so that said plate of said end cap resides flush with said end surface of said endplate.

5,702,454
PROCESS FOR IMPLANTING AN INVERTEBRAL PROSTHESIS
Walter Baumgartner, Wil, Switzerland, assignor to Sulzer Orthopadie AG, Baar, Switzerland
Division of Ser. No. 223,489, Apr. 5, 1994. This application May 29, 1996, Ser. No. 657,446
Claims priority, application European Pat. Off., Apr. 21, 1993, 93810291.0
Int. Cl.[6] A61F *2/44;* **A61B** *17/56*
U.S. Cl. 623—17 **11 Claims**

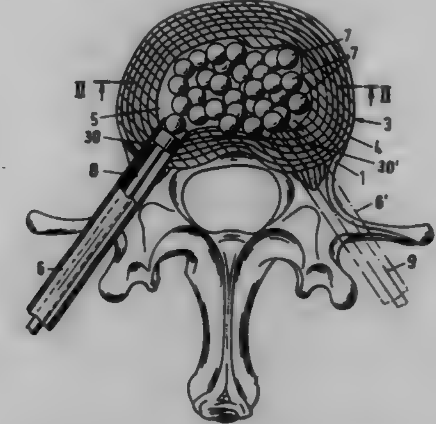

1. A method for implanting an intervertebral prosthesis comprising:
forming a cavity within an intervertebral disc;
providing at least three elastically deformable support members;
individually introducing each of the support members into the cavity of the intervertebral disc; and
individually positioning each of the support members within the cavity of the intervertebral disc.

5,702,455
EXPANDABLE PROSTHESIS FOR SPINAL FUSION
Rahul Saggar, 4 Bedford Ave., Brooklyn, N.Y. 11222
Filed Jul. 3, 1996, Ser. No. 684,770
Int. Cl.[6] A61F *2/44*
U.S. Cl. 623—17 **4 Claims**

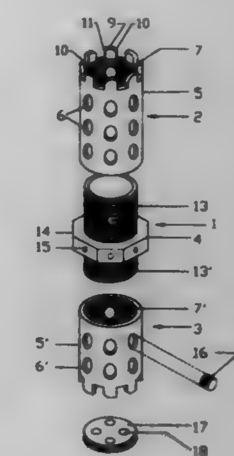

1. A spine stabilizing prosthesis for insertion between respective facing surfaces of respective vertebral portions above and below a cavity caused by removal of a portion of vertebra comprising:
first and second bearing members having respective remote, outer ends for bearing against said respective facing surfaces and respective adjacent inner ends;
jacking screw adjustment means rotatively interconnecting respective adjacent inner ends of respective bearing members for relative rotation to adjust separation of said bearing members to bridge the cavity;
said jacking screw adjustment means comprises a single tubular shaft having a medial, tool engageable portion and opposite open ends formed with respective threads which are opposite, complementary opposite threads being formed on said first and said second bearing portions; and,
said bearing members having tubular, axially extending walls perforated by a plurality of bone fragment admitting apertures forming a bone fragment receptacle so that bone can grow and fuse through said bearing members and said tubular shaft when the prosthesis is installed in the cavity.

5,702,456
IMPLANT HAVING REDUCED GENERATION OF WEAR PARTICULATES
David A. Pienkowski, Lexington, Ky., assignor to The University of Kentucky Research Foundation, Lexington, Ky.
Division of Ser. No. 276,972, Jul. 19, 1994, Pat. No. 5,515,590. This application Mar. 28, 1996, Ser. No. 623,605
Int. Cl.[6] A61F *2/30*
U.S. Cl. 623—18 **10 Claims**

1. A total joint orthopaedic implant, comprising:
a pair of matched pre-worned articulating components;
said components being matched by:
placing said total joint orthopaedic implant in a fluid bath; and
articulating said total joint orthopaedic implant in the fluid bath for a predetermined number of cycles whereby the total joint orthopaedic implant is pre-worn outside the body of a patient to remove laps, folds and other particulates and provide good surface-to-surface fit and polish so as to reduce the wear particulate burden imposed by said total

joint orthopaedic implant on surrounding tissue following implantation and thereby increase overall service life of the total joint orthopaedic implant.

5,702,457
HUMERAL PROSTHESIS INCORPORATING A SPHERE
Gilles Walch, Lyon, and Pascal Boileau, Nice, both of France, assignors to Tornier SA, Saint-Ismier, France
Filed Nov. 14, 1995, Ser. No. 557,323
Claims priority, application France, Nov. 18, 1994, 94 14052
Int. Cl.⁶ A61F *2/40*
U.S. Cl. 623—19 **22 Claims**

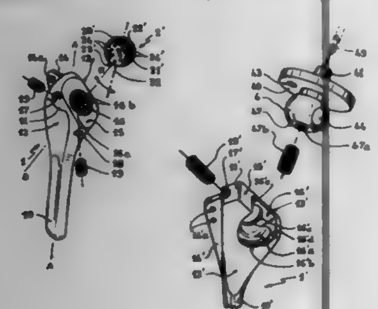

18. A prosthesis of the type for use between an upper end of a humerus having a humeral channel and the glenoid cavity of a shoulder, wherein the prosthesis comprises,

a shank having an elongated axis, said shank being adapted to anchor in the humeral channel, a cap of substantial hemispherical profile adapted to cooperate with the glenoid cavity of the shoulder, said shank having a metaphyseal part with a housing having a semi-spherical bearing surface in which is introduced a sphere to which said cap is mounted, at least one protrusion forming a portion of said bearing surface and having a predetermined profile extending outwardly into said housing, said sphere having an outer surface having a plurality of spaced cavities therein, each of said plurality of cavities having a shape which is complementary to said predetermined profile of said at least one protrusion, said sphere being selectively indexable within said housing so as to selectively align said at least one protrusion to cooperatively engage within one of said plurality of cavities in an indexed position of said sphere, and securing means extending into said housing of said metaphyseal part in a predetermined angular orientation with respect to the elongated axis of said shank for engaging said sphere to secure said sphere within said housing in said indexed position.

5,702,458
JOINT PROSTHESIS
Albert H. Burstein, Longboat Key, Fla., and Donald L. Bartel, Freeville, N.Y., assignors to New York Society for The Ruptured Crippled Maintaining The Hospital for Special Surgery, New York, N.Y.
Continuation of Ser. No. 352,898, Dec. 9, 1994, abandoned. This application Feb. 2, 1995, Ser. No. 383,757
Int. Cl.⁶ A61F *2/38*
U.S. Cl. 623—20 **5 Claims**

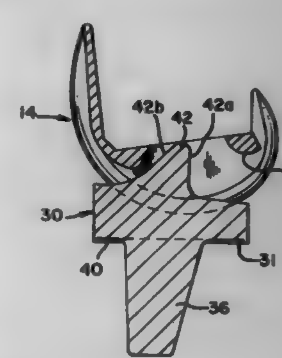

1. A joint prosthesis comprising:

a first component which includes a pair of laterally spaced apart condyles, the surface of each said condyle being defined at least in part by (a) anterior posterior radii R_{CF} and R_{CE}, wherein R_{CF} is the radius of curvature of that portion of the condyle which is weight bearing in flexion and R_{CE} represents that portion of the curvature of the condyle which is weight bearing in extension, and (b) a medial lateral radius R_{CML}; and

a second component, at least a portion of which is made of a plastic material and includes a pair of laterally spaced apart concavities, each of which is adapted to receive one of the condyles of the first component, the articulating surfaces of such concavities being defined by an anterior posterior radius R_{TAP} and a medial lateral radius R_{TML},

wherein said condyles and concavities are formed such that the ratio R_{CML}/R_{TML} is about 0.96 and the ratio R_{CE}/R_{TAP} is between 0.60 and 0.75.

5,702,459
TROCHLEA IMPLANT FOR A FEMORO-PATELLAR PROSTHESIS
Jacques Hummer, Nancy; Michel Dive, Marseilles; Michel Laurençon, Lyons, and Jacques Clauze, Baigts de Béarn, all of France, assignors to Smith & Nephew Richards France, France
Filed May 9, 1995, Ser. No. 438,005
Claims priority, application France, May 13, 1994, 94 05888
Int. Cl.⁶ A61F *2/38*
U.S. Cl. 623—20 **7 Claims**

1. A trochlea implant for a femoro-patellar prosthesis, the implant being substantially L-shaped and comprising an upper trochlea branch and a lower intercondyle branch, said upper and lower branches being at an obtuse angle to each other in a sagittal

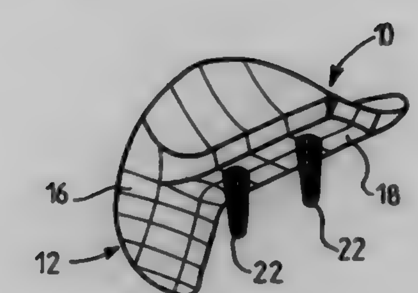

plane, the implant having a curved anterior face for receiving a patellar element and a posterior face for applying against and fixing to a distal end of a femur, the anterior face of the implant having a convex shape in said sagittal plane and a concave shape with a circular cross-section in a transverse plane perpendicular to the sagittal plane, the posterior face of the implant having a convex cross-section in the form of a circular arch in a transverse plane perpendicular to the sagittal plane, the posterior face of the upper branch of the implant further comprising a projecting longitudinal rectilinear rib adapted to be engaged in a groove of corresponding shape machined in the trochlea.

5,702,460
REVISION FEMORAL TRIAL PROSTHESIS
Thomas A. Carls; Tony Melkent, both of Memphis, Tenn.; Leo A. Whiteside, Bridgeton, Mo., and Tim Vendrely, Memphis, Tenn., assignors to Smith & Nephew, Inc., Memphis, Tenn.
Continuation-in-part of Ser. No. 482,935, Jun. 7, 1995, which is a continuation-in-part of Ser. No. 389,100, Feb. 15, 1995, Pat. No. 5,609,642. This application Aug. 16, 1995, Ser. No. 515,991
Int. Cl.⁶ A61F *2/38*
U.S. Cl. 623—20 **54 Claims**

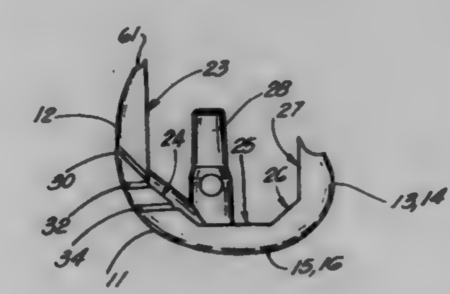

1. A trial femoral prosthesis for use in knee joint replacement surgery comprising:

a) a trim prosthesis body having an articulating surface and a non-articulating surface, said articulating surface including posterior medial and lateral condylar portions;

b) a stem member that extends from the non-articulating surface;

c) a trial insert that is connectable to the trial prosthesis body at the non-articulating surface on either the medial or lateral side of the trial prosthesis; and

d) the trial prosthesis body having cutting surfaces on the medial and lateral condylar portions for cutting the patient's distal femur during a simultaneous placement of the trial prosthesis body on the patient's distal femur.

5,702,461
PROSTHESIS FIXTURING DEVICE
Michael J. Pappas, Stuart, and Frederick F. Buechel, Naples, both of Fla., assignors to Biomedical Engineering Trust I, N.J.
Division of Ser. No. 330,196, Oct. 27, 1994. This application Jan. 18, 1996, Ser. No. 588,406
Int. Cl.⁶ A61F *2/38*
U.S. Cl. 623—20 **8 Claims**

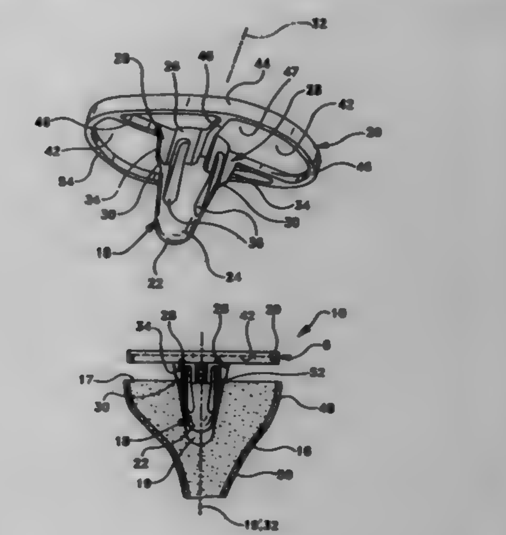

1. A prosthesis fixturing device for attaching a prosthesis component to a bone, said bone having a resected surface and a cavity, said cavity being in communication with the surface at a cavity edge, said surface and said cavity for receiving said device, said device comprising:

a tray having a first surface facing away from said bone and a second opposing surface for attachment to said resected surface of said bone; and

a stem having a proximal end rigidly joined with said second surface of said tray and a distal end remote from said tray, said stem defining a longitudinal axis, said stem including an peripheral surface extending from said proximal end to said distal end, each location on said peripheral surface defining a radial distance to said longitudinal axis, said peripheral surface being configured such that in any radial plane passing through said longitudinal axis, said radial distance of any point on said peripheral surface is not greater than the radial distance for any other of said points on said peripheral surface and in said plane at any location closer to said tray, said stem having a plurality of axially extending channels extending axially along said peripheral surface, each said channel having a bottom surface, said channel bottom surfaces intersecting said stem peripheral surface at a channel region distally of the tray, the bottom surfaces each having a radial dimension to said longitudinal axis at least as great as the radial dimension of the corresponding intersections.

5,702,462
METHOD OF MENISCAL REPAIR
Michael Oberlander, 2485 High School Ave., Ste. 208, Concord, Calif. 94520
Filed Jan. 24, 1996, Ser. No. 590,667
Int. Cl.⁶ A61F *2/38*
U.S. Cl. 623—20 **10 Claims**

1. A method of repairing a tear of a meniscus in a joint between bones of a human body comprising:

(a) providing at least tint and second anchoring members, each said anchoring member comprising a dart having a distal point and a proximal end and at least one suture attached to the dart;

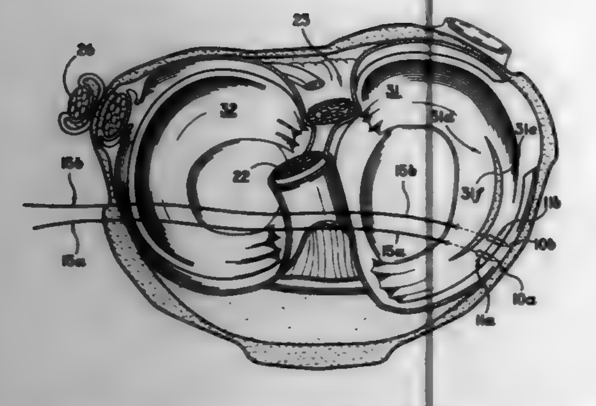

(b) inserting the first anchoring member dart within and across the interior of the joint into an interior surface of the meniscus inside the joint by traversing the inside of the joint and advancing the tint anchoring member dart at least partially across a plane of the meniscal tear and lodging the first anchoring member dart in meniscal tissue distal to the plane of the meniscal tear;
(c) inserting the second anchoring member dart within the joint into an interior surface of the meniscus inside the joint by traversing the inside of the joint, and advancing the second anchoring member dart at least partially across the plane of the tear and lodging the second anchoring member dart in meniscal tissue distal to the plane of the meniscal tear; and
(d) tying the at least one suture of the first anchoring member to the at least one suture of the second anchoring member to form a knot, and drawing the knot into contact with the surface of meniscal tissue inside the joint with sufficient tension to approximate the tear.

5,702,463
TIBIAL PROSTHESIS WITH POLYMERIC LINER AND LINER INSERTION/REMOVAL INSTRUMENT
Albert Pothier, Memphis; Gregory C. Mark, Germantown, and Derrick Givens, Memphis, all of Tenn., assignors to Smith & Nephew Inc., Memphis, Tenn.
Filed Feb. 20, 1996, Ser. No. 603,445
Int. Cl.⁶ A61F *2/38;2/30;2/00*
U.S. Cl. 623—20 **12 Claims**

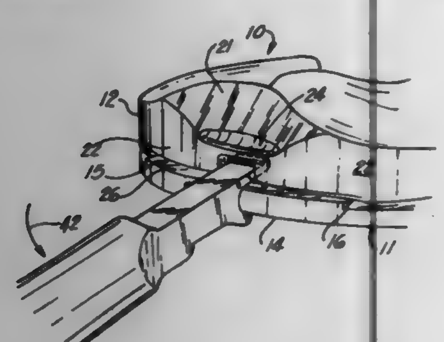

1. A tibial knee prosthesis apparatus, comprising:
a) a tibial tray component having a proximal and a distal surface, said tray being configured to be implanted in a patient's surgically prepared proximal tibia wherein the distal surface fits the tibia along a surface that defines a tibial tray plane;
b) a tibial tray liner insert having a proximal articulating surface for receiving and articulating with a patient's femoral component and an anterior portion with an inclined surface that forms an acute angle with the plane of the tibial tray;
c) a dovetail connection for connecting the liner insert and tibial tray together wherein the liner insert slides along a path during a connecting of the liner and tibial component; and
d) an instrument body that enables a user to cam the liner into engagement with the tray, said instrument body having an end portion configured for simultaneously engaging the tray and the liner at the inclined surface while the user moves the liner into engagement with the tray.

5,702,464
MODULAR TRIAL TIBIAL INSERT
Jennifer J. Lackey; Albert J. Pothier; Thomas A. Carls; Chris E. Johnson, and Scott Elliott, all of Memphis, Tenn., assignors to Smith & Nephew Inc., Memphis, Tenn.
Filed Feb. 20, 1996, Ser. No. 603,581
Int. Cl.⁶ A61F *2/30;2/38*
U.S. Cl. 623—20 **31 Claims**

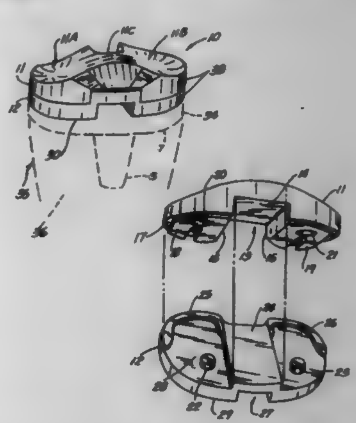

1. A tibial trial prosthesis for attachment to a patient's transversely cut proximal tibia, comprising:
a) a tibial tray having a proximal and a distal surface, the distal surface fitting against a patient's surgically prepared proximal tibia during knee joint replacement surgery;
b) a plastic liner insert that fits the tray with an interlocking connection, the liner having a distal surface and a proximal articulating surface that is receptive of a distal femoral articulating surface, the proximal articulating surface having concavely-shaped portions;
c) a plurality of spacers that can be positioned in between the plastic liner insert and the tibial tray, each having proximal and distal surfaces, at least one of said spacers having connecting portions on each of said proximal and distal surfaces for forming respective connections with the tibial tray and plastic liner;
d) the liner insert having a connecting portion on its distal surface for selectively connecting to the proximal surface of the spacer and alternatively to the proximal surface of the tray; and
e) the liner insert and spacers each having a periphery in the form of a sidewall that is an extension generally of the patient's proximal tibia.

5,702,465
PATELLA PROSTHESIS HAVING ROTATIONAL AND TRANSLATIONAL FREEDOM
Brian D. Burkinshaw, Pflugerville, Tex., assignor to Sulzer Orthopedics Inc., Austin, Tex.
Filed May 13, 1996, Ser. No. 648,222
Int. Cl.⁶ A61F *2/38*
U.S. Cl. 623—20 **10 Claims**

1. An implantable patellar prosthesis for replacing the natural articulation surface of a patella, comprising:
a base component having a fixation surface for fixation to patellar bone;
an articulation component having a prosthetic articulation surface; and

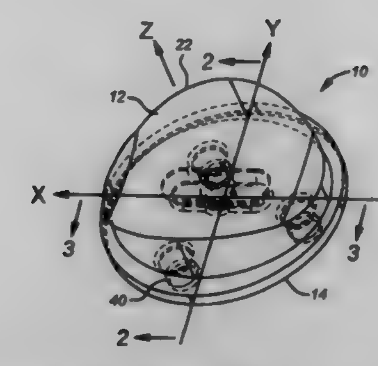

means for connecting said articulation component to said base component to permit motion of said articulation component relative to said base component while limiting said relative motion to one rotational degree of freedom and two translational degrees of freedom.

5,702,466
ROTATIONAL AND TRANSLATIONAL BEARING COMBINATION IN BIOLOGICAL JOINT REPLACEMENT
Michael J. Pappas, Caldwell, and Frederick F. Buechel, South Orange, both of N.J., assignors to Biomedical Engineering Trust I, South Orange, N.J.
Continuation of Ser. No. 203,657, Feb. 25, 1994, which is a continuation of Ser. No. 872,954, Apr. 23, 1992, abandoned. This application May 16, 1996, Ser. No. 648,627
Int. Cl.⁶ A61F *2/38*
U.S. Cl. 623—20 **28 Claims**

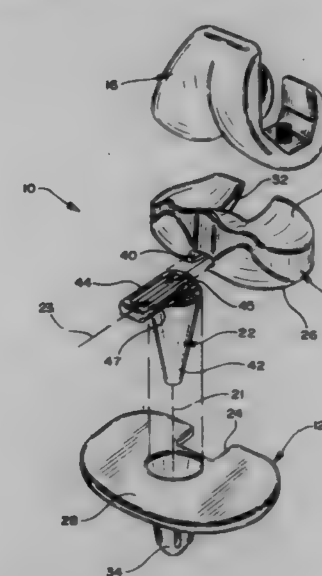

1. An improved prosthetic joint for accommodating articulation between a first bone and a second bone, said joint comprising:
a first element for attachment to a first bone, said first element having a surface facing generally away from said first bone;
a second element for attachment to a second bone, said second element having a surface facing generally away from said second bone;
bearing means disposed between said first and second elements, said bearing means having a first bearing surface in contact with said surface of said first element, and a second bearing surface in contact with said surface of said second element; and
intermediate means disposed wholly between said first element and said bearing means for selectively permitting translation of said bearing means, said intermediate means being movable with respect to both said first element and said bearing means, and wherein said bearing means is slidable to permit longitudinal translation with respect to said intermediate means and further including means for preventing transverse translation of said bearing means with respect to said intermediate means.

5,702,467
PATELLAR RESURFACING COMPONENT
Stefan M. Gabriel, Lakeville, and David G. Sheehan, Carver, both of Mass., assignors to Johnson & Johnson Professional, Inc., Raynham, Mass.
Filed Jun. 12, 1996, Ser. No. 660,970
Int. Cl.⁶ A61F *2/30;2/38*
U.S. Cl. 623—20 **4 Claims**

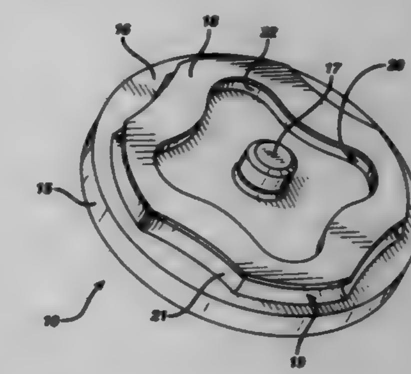

1. A patellar prosthesis comprising:
a body having:
a convexly shaped articular surface for articulating with a femoral prosthesis; and
an inferior surface for interfacing with a patella bone to couple said patellar prosthesis to a prepared patella bone, said inferior surface comprising:
a central axis extending from said articular surface through said inferior surface;
a raised portion comprising a first undercut surface, said first undercut surface facing away from said axis; and
a second undercut surface, said second undercut surface facing toward said axis; wherein said first undercut surface is a first radial distance from said axis and said second undercut surface is a second radial distance from said axis; and
wherein said first distance is greater than said second distance.

5,702,468
CARPAL BONE BIAXIALLY RESTRAINED PROSTHESIS
Robert Goldberg, Campbell, Calif., assignor to Uresil Corporation, Skokie, Ill.
Filed Mar. 9, 1995, Ser. No. 401,448
Int. Cl.⁶ A61F *2/28*
U.S. Cl. 623—21 **67 Claims**

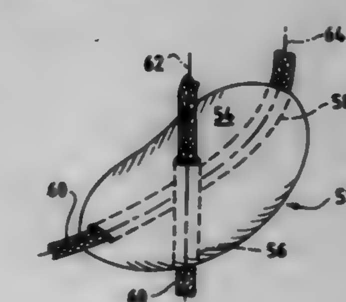

1. A surgically implantable carpal bone prosthesis comprising:
a biocompatible, medically inert body member contoured to resemble the shape of the carpal bone which it is to replace; and
means for restraining said body member along crisscrossing axes which pass through the body member, the body member including at least two independent channels passing therethrough along the independent axes and the restraining means comprising ligamentous means passing through the channels.

5,702,469
THUMB JOINT PROSTHESIS AND RELATED METHOD OF IMPLANTATION
Terry L. Whipple, Richmond, Va., and Glynnis E. Stone, Mill Valley, Calif., assignors to Kinetikos Medical, Inc., San Diego, Calif.
Filed Jan. 18, 1996, Ser. No. 58[illegible],432
Int. Cl.[6] A61F *2/42*
U.S. Cl. 623—21 **10 Claims**

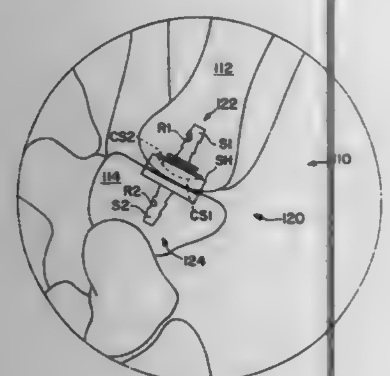

1. A trapezio-metacarpal thumb joint prosthesis adapted for implantation into a metacarpal bone and a trapezium bone of a trapezio-metacarpal thumb joint a human thumb, the thumb having a radial side and the metacarpal and trapezium bones each having a longitudinal axis, said prosthesis comprising:
(a) a metacarpal component having (i) a forward end of a generally truncated hemispherical shape and having a convex surface, and (ii) a rear end having a stem, and the stem being adapted for insertion into a pre-cut void in a pre-selected thumb metacarpal bone from a direction above the radial side of the thumb substantially transverse to the longitudinal axis of the metacarpal bone; and
(b) a trapezium component having (i) a forward end of a generally cylindrical shape and having a generally concave surface, the concave surface being adapted for non-captive rotational abutment with the convex surface of the metacarpal component, and (ii) a rear end having a stem, and the stem being adapted for insertion into a pre-cut void in a pre-selected thumb trapezium bone from a direction above the radial side of the thumb substantially transverse to the longitudinal axis of the trapezium bone.

5,702,470
PROSTHETIC WRIST IMPLANT AND RELATED METHOD OF IMPLANTATION
Jay Menon, Fontana, Calif., assignor to Kinetikos Medical Incorporated, San Diego, Calif.
Filed Feb. 23, 1996, Ser. No. 605,525
Int. Cl.[6] A61F *2/42*
U.S. Cl. 623—21 **9 Claims**

1. A prosthetic wrist disposed between a patient's radius and carpal complex bones comprising:

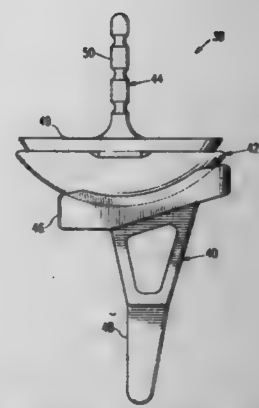

a radial implant having an elongated concave articular front surface and back surface, the radial implant also having a first post member projecting from the back surface into a cavity in the radius;
a carpal bone implant including a planar member having a front face and a generally flat rear face, said planar member having first and second openings, and a second post member projecting from the rear face into a cavity of the carpal bone complex;
a pair of screws inserted through the first and second planar member openings for securing the carpal bone implant to the carpal bone complex;
an articulating member having a flat bottom surface fastened to the front face of the planar member and an elongated convex surface slidably engaging the concave articular surface of the radius implant to permit articulation between the radial and carpal bone complex by the concave and convex articular surfaces.

5,702,471
FINGER JOINT
Hans Grundei, Lübeck; Jürgen Rudigier, Offenburg, and Christian Weber, Hohwald, all of Germany, assignors to ESKA Medical GmbH & Co., Lübeck, Germany
Filed Mar. 18, 1996, Ser. No. 617,231
Claims priority, application Germany, Apr. 6, 1995, 195 12 854.0
Int. Cl.[6] A61F *2/42*
U.S. Cl. 623—21 **8 Claims**

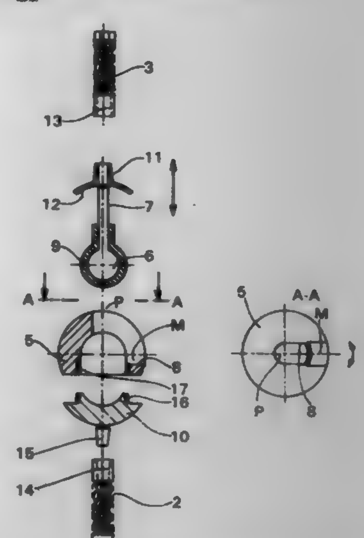

1. A prosthetic finger joint (1) comprising a first and a second hollow anchorage shaft (2, 3) configured to be implanted in tubular finger bones, and a hinge joint (4) in a form of a ball-and-socket joint arranged between the shafts (2,3), the first hollow shaft (2) being connected with a ball cage (5) of the hinge joint (4), a spherical part (6) provided with a protruding stem (7) being mounted in the ball cage, the stem (7) passing through a slit (8) in the ball cage (5) and connecting with the second hollow shaft (3), the slit (8) in the ball cage (5) continuously widening from a point (P) at which the stem (7) passes through the ball cage (5) in an extended position of the joint (4) to a point (M) at which the stem (7) passes through the ball cage (5) in a flexed position of the joint (4).

5,702,472
PHALANGEAL FINGER JOINT PROSTHESIS AND METHOD
Randall J. Huebner, 18650 SW. Hart Rd., Aloha, Oreg. 97005
Filed Dec. 26, 1996, Ser. No. 773,968
Int. Cl.[6] A61F *2/42*
U.S. Cl. 623—21 **27 Claims**

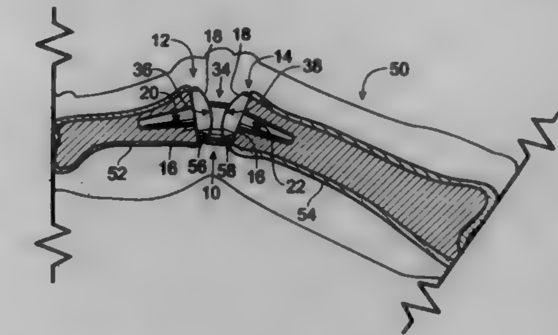

1. A phalangeal finger joint prosthesis, comprising:
a first pin having an elongate shaft for inserting into a proximal end of a phalange on a first side of a finger joint, the first pin further including a head with a lower surface mounted on the shaft and a convex cylindrically-shaped beating surface that is opposite the lower surface and defines an axis of curvature;
a second pin having an elongate shaft for inserting into a distal end of a phalange on a second side of the finger joint, the second pin further including a head with a lower surface mounted on the shaft and a convex cylindrically-shaped beating surface that is opposite the lower surface and defines with an axis of curvature; and
a spacer configured to be disposed between the heads of the first and the second pins, the spacer having opposed beating surfaces that are each configured to mate with the bearing surface of one of the heads so that the beating surfaces of the heads are generally oriented toward each other, the spacer configured to couple the first and the second pins in a spaced relationship with parallel axes of curvature to permit the prosthesis to flex and extend in a single plane while constraining abduction, adduction and rotation of the prosthesis.

5,702,473
CUP
Björn Albrektsson, Onsala; Lars Carlsson, Kullavik; Magnus Jacobsson, Göteborg; Tord Röstlund, Kullavik, and Stig Wennberg, Angered, all of Sweden, assignors to Astra Aktiebolag, Sodertalje, Sweden
PCT No. PCT/SE94/01233, § 371 Date Apr. 19, 1995, § 102(e) Date Apr. 19, 1995, PCT Pub. No. WO95/17140, PCT Pub. Date Jun. 29, 1995
PCT Filed Dec. 21, 1994, Ser. No. 416,879
Claims priority, application Sweden, Dec. 23, 1993, 9304281
Int. Cl.[6] A61B *2/32*
U.S. Cl. 623—22 **5 Claims**

1. An acetabular cup for being implanted into a cavity in the bone tissue in the acetabulum as part of a hip joint prosthesis, the cup comprising:

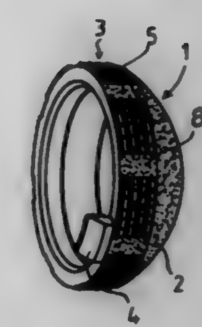

a first part having an exterior surface in the shape of a spherical segment, the first part having an edge and the spherical segment having a first diameter at said edge;
a second part adjoining the first part at the edge, the second part having a cylindrical exterior surface for engagement with said cavity, said cylindrical exterior surface having a second diameter not greater than said first diameter of the spherical segment,
the second part further having one or more circumferentially oriented beads disposed on the cylindrical exterior surface each bead having a barb-like shape presenting a forward edge which forms an acute angle with said cylindrical exterior surface and a backward edge which is substantially perpendicular to said cylindrical exterior surface; and
a roughened surface on the exterior surfaces of the first and second parts;
wherein the bead counter-acts the removal of said cup from the cavity and the toughened surface on the exterior of the first and second parts serves as a file when said cup is moved or rotated in said cavity.

5,702,474
COAXIAL LIGAMENTED HIP PROSTHESIS
Robert McCandliss, 3836 Baywood Dr., Moss Point, Miss. 39563-5006
Filed Jan. 22, 1996, Ser. No. 589,644
Int. Cl.[6] A61F *2/32*
U.S. Cl. 623—22 **11 Claims**

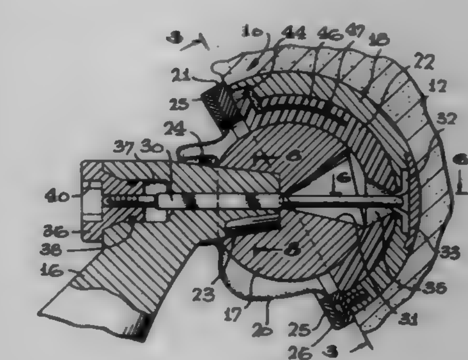

1. A hip socket prosthesis for disposal between a skeletal femur and a pelvis socket comprising:
a metal semi-spherical acetabulum base;
a spherical ball;
a plastic acetabulum liner disposed in said metal semi-spherical acetabulum for movably holding said spherical ball;
an elongated stem having a head laterally projecting into securement with said spherical ball; and
a ligament rod movably carried on said head and secured to said metal semi-spherical acetabulum base for movably holding said spherical ball.

5,702,475
MODULAR BONE IMPLANT WITH PAN AND PINS
Amir Zahedi, Birkenweg 16, D-48155, Münster, Germany
Filed Feb. 14, 1996, Ser. No. 601,170
Int. Cl.⁶ A61F *2/34*
U.S. Cl. 623—22 **6 Claims**

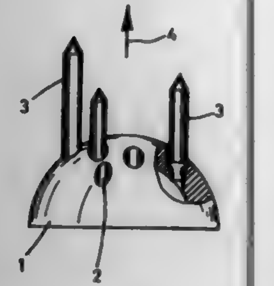

1. A bone implant comprising a pan having an outer surface configured in a form of a segment of a sphere and an inner surface configured to receive a head of a femoral prosthesis, and pin-type fastening means to anchor the pan in the pelvic bone of the patient, the pan having recesses sized to receive the fastening means, and with the recesses being designed for an axially parallel arrangement of the fastening means, characterized in that the recesses have

axially parallel bores, each said bore converging conically toward an interior of the pan, and wherein said fastening means have a conically-shaped portion for insertion into said pan, and

stop means for preventing movement of the fastening means towards the interior of the pan, said fastening means being substantially free of threads in an area that is inserted into the pelvic bone of the patient.

5,702,476
ARTIFICIAL JOINT SHELL
Urs Limacher, Hünenberg, and Stefan Lamprecht, Birchwil, both of Switzerland, assignors to Sulzer Medizinaltechnik AG, Winterthur, and Allo Pro AG, Baar, both of Switzerland
Filed Apr. 16, 1996, Ser. No. 632,978
Claims priority, application European Pat. Off., May 18, 1995, 95810329
Int. Cl.⁶ A61F *2/34;2/30*
U.S. Cl. 623—22 **18 Claims**

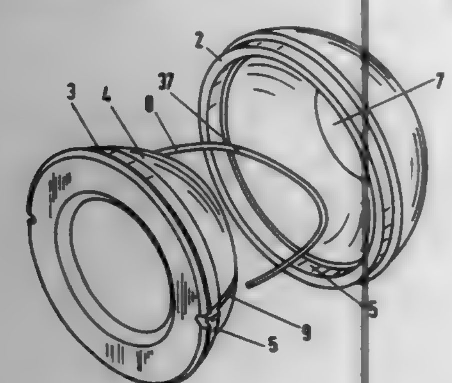

1. A replaceable acetabular joint implant comprising an outer shell having a cavity and an inner shell disposed in the cavity, the shells defining an interface between them and a releasable lock which releasably retains the inner shell in the cavity of the outer shell, the outer shell and the inner shell terminating in generally concentric end faces, and a tunnel formed along the interface extending from a first tunnel opening to a second tunnel opening, the tunnel openings being located at at least one of the end faces so that the tunnel is accessible past one of the openings from an exterior of the shells and a flexible tensioning member disposed in said tunnel such that the lock can be released by applying an inner shell releasing force thereto.

5,702,477
ACETABULAR SHELL WITH SUPPLEMENTAL SUPPORT AND METHOD
William N. Capello, Indianapolis, Ind., and Nicholas N. G. Dong, Little Falls, N.J., assignors to Osteonics Corp., Allendale, N.J.
Filed May 9, 1996, Ser. No. 647,404
Int. Cl.⁶ A61F *2/34*
U.S. Cl. 623—22 **16 Claims**

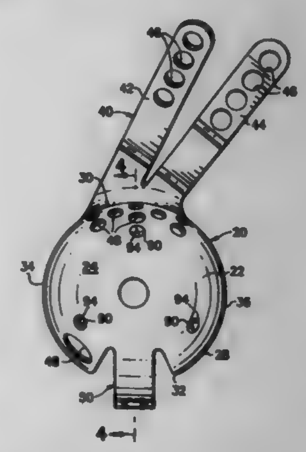

1. An acetabular shell for implant at an acetabulum in a deficient pelvis to establish an effective acetabular site with increased support in posterior and superior directions for an acetabular bearing insert to be affixed in place in the acetabular shell for the reception of a femoral head of a femoral component of a prosthetic hip implant, the acetabular shell comprising:

a domed portion having a convex outer surface for engaging the acetabulum, a concave inner surface for reception of the bearing insert, the inner surface extending along a spherical contour up to a generally hemispherical extent, and a rim between the outer and inner surfaces, the rim being placed adjacent an equatorial location along the domed portion and including a superior segment, an inferior segment longitudinally opposite the superior segment, a posterior segment and an anterior segment laterally opposite the posterior segment;

an anchoring plate integral with the domed portion adjacent the superior segment of the rim; and

a supplemental support web extending along the rim from the posterior segment to the anchoring plate at the superior segment, the support web projecting beyond the equatorial location for providing supplemental support for a bearing insert in the posterior and superior directions.

5,702,478
ACETABULAR IMPLANT INTENDED IN PARTICULAR FOR THE ILIAC JOINT SOCKET
Alain Tornier, Saint-Ismier, France, assignor to Tornier SA, Saint-Ismier, France
Filed Jun. 7, 1996, Ser. No. 657,890
Claims priority, application France, Jun. 16, 1995, 95 07448
Int. Cl.⁶ A61F *2/34*
U.S. Cl. 623—22 **17 Claims**

1. An acetabular implant for implantation in a damaged natural joint socket comprising, a hollow cage defined by a circular base and struts extending outwardly from said base and converging at a cap opposite from said base, said base and struts being strips of metal which are spaced apart to form large free spaces therebetween, said cage having projecting protuberances disposed on an

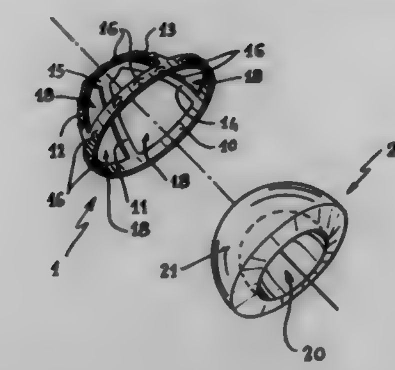

outer surface thereof to provide sole metallic contact between the implant and bone, and a plastic insert having an outer surface configured to be inserted within said cage, said insert having a partial spherical recess formed therein for receipt of a complimentary spherical ball joint, said circular base of said cage having an inner surface including a bead projecting therefrom of a size and configuration to elastically snap fit and engage within a peripheral groove formed in said outer surface of said insert, wherein at least one of said struts includes a protruding rib extending from an inner surface thereof, said rib being engageable within a groove extending in a meridian orientation in said outer surface of said insert to thereby prevent rotation of said insert with repect to said cage when said insert is assembled to said cage prior to insertion of the implant into the natural joint socket such that said outer surface of said insert not covered by said struts adheres to a layer of cement deposited in the natural joint socket.

5,702,479
SHAFT COMPONENT FOR A JOINT ENDOPROSTHESIS
Peter Schawalder, Gassackerstrasse 22, CH-3303 Wohlen bei Bern, Switzerland
PCT No. PCT/CH94/00037, § 371 Date Mar. 20, 1995, § 102(e) Date Mar. 20, 1995, PCT Pub. No. WO94/18911, PCT Pub. Date Sep. 1, 1994
PCT Filed Feb. 18, 1994, Ser. No. 318,866
Claims priority, application Switzerland, Feb. 18, 1993, 506/93-5
Int. Cl.⁶ A61F *2/30*
U.S. Cl. 623—23 **12 Claims**

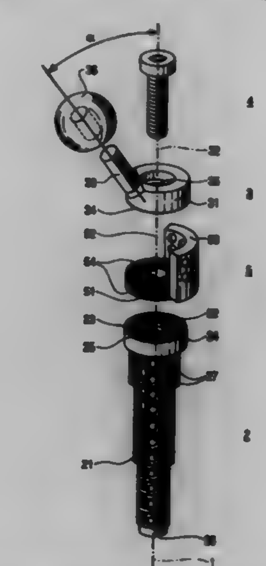

1. A shank unit for an endo joint prosthesis to be implanted in a tubular bone and comprising

a hollow, cylindrical anchoring sub-assembly (2) having a longitudinal axis (1) and being substantially rotationally symmetrical,

said anchoring sub-assembly comprising a plurality of coaxial, hollow cylindrical segments enlarging toward an upper end of said sub-assembly, said segments having perforated outer surfaces;

an articulating sub-assembly (3) detachably connectable to said upper end of said anchoring sub-assembly (2), said articulating sub-assembly including

a substantially rotationally symmetrical base element (31),

an axis of rotation (32), and

a neck extension (33) mounted eccentrically on said base element and subtending an angle of less than 90° with said axis of rotation (32) for receiving a joint ball (36);

said base element of said articulating sub-assembly being detachably mountable on said on said anchoring sub-assembly (2) with the axes of said anchoring and articulated sub-assemblies coincident and with said articulated subassembly in any selected rotational angular position relative to said anchoring subassembly such that a radial position of said neck extension can be selected to adjust anterior torsion to a desired level.

5,702,480
MODULAR HIP JOINT PROSTHESIS
Philipp Rolf Kropf, Haldenstrasse 25, 8142 Uitikon, and Albert Geisser, Stationsstrasse 33, CH-6373, Ennetbürgen, both of Switzerland
Continuation of Ser. No. 121,727, Sep. 15, 1993, abandoned.
This application Apr. 25, 1995, Ser. No. 430,126
Claims priority, application Switzerland, Oct. 13, 1992, 03193/92
Int. Cl.⁶ A61F *2/36*
U.S. Cl. 623—23 **15 Claims**

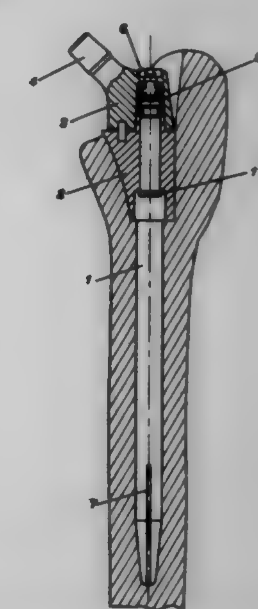

10. A modular hip joint prosthesis comprising a stem forming a distal part of said prosthesis,

a metaphysary part axially attachable to said stem from a proximal end of said stem and having a diameter increasing towards a proximal end of said metaphysary part, an outer surface of said metaphysary part providing a widening surface section of said prosthesis,

a cervical part axially attachable to said stem from said proximal end of said stem and carrying a laterally-projecting neck for receiving a ball or head of the hip joint, said cervical part alone defining the angle of projection of said laterally-projecting neck, wherein said stem extends through said metaphysary part and into said cervical part,

wherein said stem, said metaphysary part, and said cervical part are three separate modular parts.

5,702,481
BONE MARROW CAVITY FIXATION DEVICE FOR TREATING A FRACTURED BONE
Chih-I Lin, 14292 Spring Vista La., Chino Hills, Calif. 91709
Filed May 16, 1995, Ser. No. 442,111
Int. Cl.⁶ A61F *2/36*
U.S. Cl. 623—23 **4 Claims**

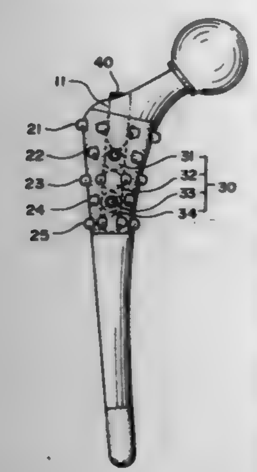

1. A bone marrow cavity fixation device for treating a fractured bone comprising:

a tubular body provided axially with a hollow interior having an open top, said tubular body further provided peripherally with a plurality of through holes in communication with said hollow interior and the outside of said tubular body;

a plurality of diameter-adjusting elements dimensioned and shaped to be received movably in said through holes of said tubular body, said diameter-adjusting elements provided respectively with a holding element capable of preventing said diameter-adjusting elements from becoming disengaged with said through holes;

an adjustment element received in said hollow interior of said tubular body such that inner ends of said diameter-adjusting elements are urged by said adjustment element wherein said adjustment element comprises a plurality of generally spherical or oval bodies in contact with one after another; and

an urging element received in said hollow interior of said tubular body via said open top such that said adjustment element can be actuated by a rotational motion of said urging element so as to cause said diameter-adjusting elements to jut out of said through holes of said tubular body;

wherein a retaining means is provided engageable with said holding element of each of said diameter-adjusting elements for preventing said diameter-adjusting elements from becoming disengaged with said through holes of said tubular body.

5,702,482
IMPLANT FIXATION STEM
Nisra Thongpreda; Roy Y. Hori, both of Warsaw, Ind., and Richard F. Kyle, Long Lake, Minn., assignors to Zimmer, Inc., Warsaw, Ind.
Continuation of Ser. No. 6,327, Jan. 21, 1993, Pat. No. 5,507,829, which is a continuation of Ser. No. 794,289, Nov. 19, 1991, abandoned. This application Oct. 31, 1995, Ser. No. 551,209
Int. Cl.⁶ A61F *2/36*
U.S. Cl. 623—23 **2 Claims**

1. A set of stemmed implants for a bone comprising a first stemmed implant and a second stemmed implant, the first stemmed implant having a stem that exhibits a predetermined deflection in response to a predetermined force, the second stemmed implant having a stem that exhibits a predetermined deflection in response to a predetermined force, the stem of the second stemmed implant being larger than the stem of the first stemmed implant, the

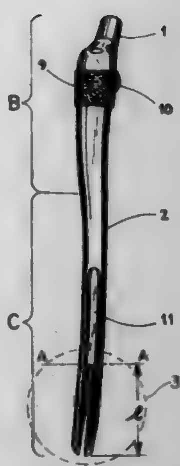

predetermined deflection in response to a predetermined force of the first stemmed implant being the same as the predetermined deflection in response to a predetermined force of the second stemmed implant.

5,702,483
DEBRIS ISOLATING PROSTHETIC HIP JOINT
Louis M. Kwong, 9675 Brighton Way, Suite 330, Beverly Hills, Calif. 90210
Continuation of Ser. No. 319,437, Oct. 6, 1994, abandoned. This application Nov. 15, 1995, Ser. No. 559,480
Int. Cl.⁶ A61F *2/36;2/32;2/30*
U.S. Cl. 623—23 **18 Claims**

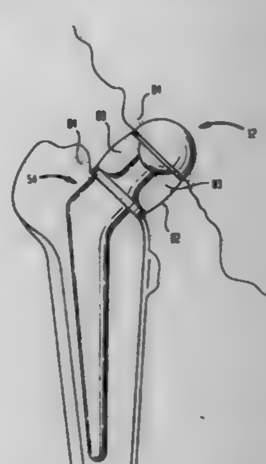

1. In a prosthetic hip assembly of the type including an acetabular component comprising a generally hemispherical exterior surface and a generally hemispherical interior surface, said interior surface defining a first articulating surface, and a continuous annular rim surface extending radially from said interior surface to said exterior surface, and a femoral component comprising an elongated stem, a neck extending from said stem, and a spherically shaped head coupled to a free end of said neck, said head defining a second articulating surface, the improvement therewith comprising:

first surface treatment means forming a portion of said continuous annular rim surface for promoting the attachment of a fibrous tissue to said acetabular component, said first surface treatment means extending entirely along said continuous annular rim surface; and

second surface treatment means for promoting the attachment of the fibrous tissue to said femoral component, said surface treatment means forming a continuous annular portion of a surface of said femoral component which is located adjacent to said neck, wherein said surface having said second surface

treatment means faces substantially toward said spherically shaped head and said first surface treatment means being in opposing relationship with said second surface treatment means when said components are implanted into selected bones of a patient, wherein the fibrous tissue attaching to said first and second means forms a sealed capsule between said components, whereby said sealed capsule substantially prevents wear debris, created within said capsule by said first and second articulating surfaces rubbing against one another, from migrating out of said sealed capsule into interfaces between said components and said selected bones and substantially prevents metal and cement debris, remaining at the interfaces between said components and said selected bones after said implantation from migrating into said sealed capsule and toward said first and second articulating surfaces.

5,702,484
ENDOPROSTHESIS
Volkmar Goymann, Essen; Emmanuel Anapliotis, and Juergen Darga, both of Berlin, all of Germany, assignors to BIOMET Deutschland GmbH, Berlin, Germany
Filed Jan. 11, 1996, Ser. No. 585,388
Claims priority, application Germany, Jan. 11, 1995, 195 01 995.4
Int. Cl.⁶ A61F *2/36*
U.S. Cl. 623—23 **22 Claims**

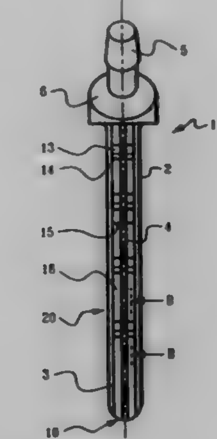

1. An endoprosthesis for a cement free anchorage in a bone having a longitudinal direction, comprising:

a prosthetic shank to be secured in the bone in the longitudinal direction of the bone and having a proximal end and a distal end, the prosthetic shank comprising three plate-like blades arranged in parallel and presenting a cross-sectional profile that has an open configuration, a first one of the blades constituting a central web and a second and third ones of the blades constituting side walls which enclose, at least partially, the central web and extend, at least partially, in parallel, in a direction of the central web, the prosthetic shank further including bridges connecting the side walls with the central web, wherein a region adjacent the distal end of the prosthetic shank is in the shape of a scoop and the blades are joined at least at the distal end to form a common cutting edge; and

a collar including a pin for receiving a ball joint attached to the proximal end of the prosthetic shank.

5,702,485
COLLARED PROSTHETIC DEVICE WITH CENTERING FINS
Dennis W. Burke, 245 Highland St., Milton, Mass. 02186; G. Kris Kumar, 41 N. Orchard Dr., Warsaw, Ind. 46580, and Steven C. Kitch, 6746 E. 250 St., Akron, Ind. 46910
Continuation-in-part of Ser. No. 452,840, May 26, 1995, Pat. No. 5,569,255, which is a division of Ser. No. 183,077, Jan. 18, 1994, Pat. No. 5,480,453, which is a continuation of Ser. No. 979,615, Nov. 20, 1992, abandoned. This application Feb. 16, 1996, Ser. No. 601,339
Int. Cl.⁶ A61F *2/36*
U.S. Cl. 623—23 **19 Claims**

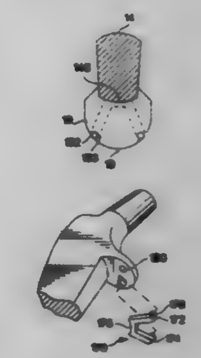

18. A prosthetic component for use in a joint replacement, said prosthetic component being adapted to be inserted into a cavity formed in a proximal end of a bone, said component comprising:

an elongated stem adapted to fit into the cavity formed in the proximal end of the bone, said stem having a proximal end and a medial surface;

a collar disposed on said proximal end of said stem and extending at least from the medial surface in a direction generally transverse of a direction of elongation of said stem, said collar having a lower surface adapted to rest in contact with a surface on the proximal end of the bone; and

a structure disposed on said lower surface of said collar, said structure being disposed only beyond said medial surface of said stem and comprising at least two fins disposed at an angle with respect to one another and extending away from said medial surface of said stem, said fins being interconnected by a web, said fins being structured to extend into a recess formed in the proximal end of the bone.

5,702,486
MODULAR HUMERAL PROSTHESIS FOR RECONSTRUCTION OF THE HUMERUS
Edward Vincent Craig, Edina; Richard Frank Kyle, Long Lake, both of Minn., and Christopher Bryan Straight, Cockeysville, Md., assignors to Kirschner Medical Corporation, Timonium, Md.
Division of Ser. No. 198,036, Feb. 22, 1994, Pat. No. 5,507,817. This application Apr. 3, 1996, Ser. No. 626,958
Int. Cl.⁶ A61F *2/36*
U.S. Cl. 623—23 **10 Claims**

1. A modular humeral prosthesis for implantation into a humerus of a patient, the humerus including a natural humeral shaft and a natural humeral head, said prosthesis comprising:

a proximal humeral component including a distal stem section and a platform disposed on an upper end of said distal stem section, said platform disposed at an angle to said distal stem section, said proximal humeral component including a tapered projection disposed on said platform;

a fracture cap, said fracture cap having a peripheral wall and an end wall defining a tapered opening within said fracture cap, said tapered opening having generally the same shape as said

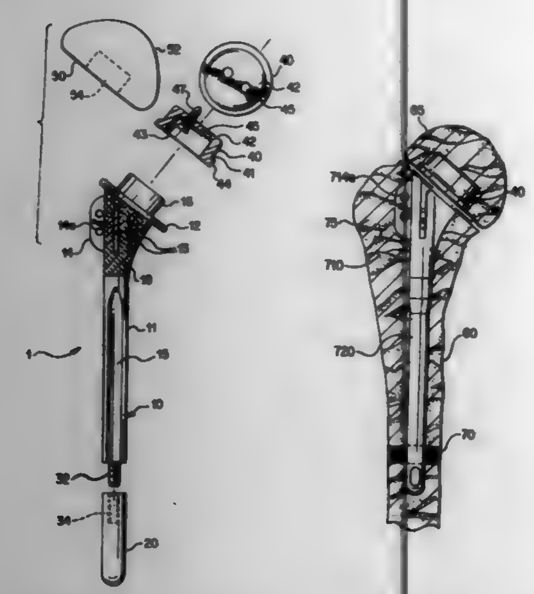

tapered projection, said fracture cap removably disposed on said proximal humeral component by fitting said projection within said opening to create a frictional taper lock; and

a bone structure attachable to said fracture cap serving to fixedly secure reassembled bone fragments of the natural humeral head to said fracture cap to reconstruct the natural humeral head.

5,702,487
PROSTHETIC DEVICE
Robert G. Averill, Ringewood; Robert C. Cohen, Rockaway Township, and Rafail Zubok, Midland Park, all of N.J., assignors to Implex Corporation, Allendale, N.J.
Continuation of Ser. No. 252,450, Jun. 1, 1994, abandoned. This application Apr. 23, 1996, Ser. No. 636,727
Int. Cl.^{6} A61F *2/32*
U.S. Cl. 623—23 **14 Claims**

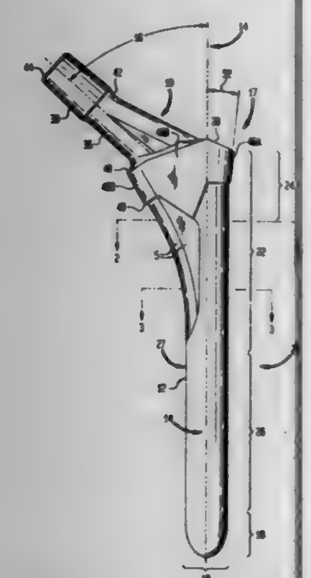

1. A hip prosthesis for implanting into a medullary canal of a femur, said prosthesis comprising:

a stem for implanting into the canal of a proximal, said stem having a proximal end and a distal end, said stem including a proximal locking zone substantially adjacent said proximal end, said proximal locking zone including an outwardly flared circumferential proximal locking surface which extends about said proximal end of said stem, said proximal locking surface circumferentially press-fits within the canal of the femur, wherein said outwardly flared circumferential proximal locking surface includes a first planar locking surface on an anterior side of said prosthesis, a second planar locking surface on a posterior side of said prosthesis, and a convex locking surface extending between and merging into said first and second planar locking surfaces on a lateral side of said prosthesis; and

a neck extending at an angle from said proximal end of said stem for receiving a femoral head prosthesis.

5,702,488
PROSTHETIC PYLON HAVING AN ENCLOSED COMPRESSIBLE VOLUME OF FLUID TO SUPPORT A PATIENT'S WEIGHT
Christopher Wood, Kingston; James G. Cairns, Jr., Bainbridge Island, and Walter D. Harris, Bremerton, all of Wash., assignors to Model & Instrument Development Corporation, Seattle, Wash.
Filed Sep. 12, 1995, Ser. No. 527,514
Int. Cl.^{6} A61F *2/60*
U.S. Cl. 623—27 **15 Claims**

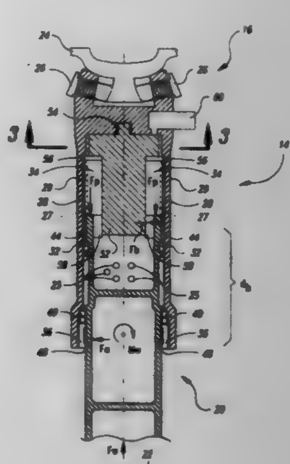

2. A pylon for supporting the weight of a patient with a leg stump on a prosthetic foot supported by the ground, the pylon comprising:

a first end portion connectable to the patient's leg stump;

a second end portion opposing the first end portion and connectable to the prosthetic foot, the second end portion being rotatable and axially movable relative to the first end portion about and along a longitudinal axis of the pylon, respectively;

an enclosed compressible volume of fluid coupling the first and second end portions and through which substantially all of the patient's weight applied through the patient's leg stump to the first end portion is supportable; and

a torsional spring coupling the first and second end portions for resisting relative rotation between the first and second end portions without supporting any substantial portion of the patient's weight applied through the patient's leg stump to the first end portion, wherein the torsional spring is contained within the enclosed compressible volume of fluid.

5,702,489
VALVE ASSEMBLY FOR A PROSTHETIC LIMB
Tracy C. Slemker, Clayton, Ohio, assignor to Materials Engineering And Development, Inc., Brookville, Ohio
Filed Aug. 18, 1995, Ser. No. 516,557
Int. Cl.^{6} A61F *2/80*
U.S. Cl. 623—34 **17 Claims**

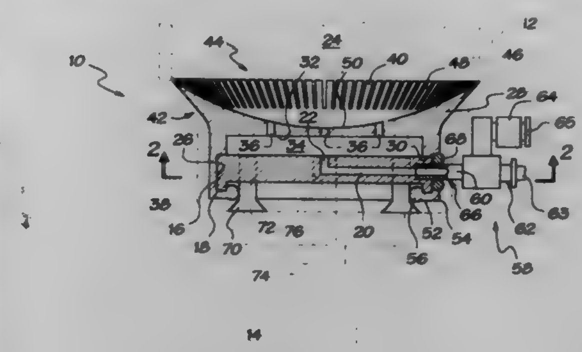

1. A prosthetic limb, comprising:

a socket for receiving a wearer's residual limb, said socket having an interior, a distal end, and an inner surface;

an upright assembly;

a baseplate having a proximate surface, positioned within said socket interior at said distal end, said baseplate including a chamber therewithin and at least one channel providing fluid communication between said chamber and said socket interior;

means for securing said baseplate in said socket;

means for coupling said upright assembly to said socket;

a duct extending through said socket, connected to said baseplate and in fluid communication with said chamber;

a valve in said duct;

an air-tight sealing member between said baseplate and said socket inner surface; and

an interface cushion carried on said baseplate and adapted to abut said wearer's residual limb, said interface cushion including at least one channel providing fluid communication between said chamber and said socket interior.

VOL 1205
ISS 5
DE 30 1997
UMI

CHEMICAL

5,702,490

WATER REPELLENT TREATMENT OF LEATHER AND SKINS WITH POLYSILOXANES FUNCTIONALIZED WITH CARBOXYL GROUPS IN A COMB-LIKE MANNER

Michael Kneip, Frankenthal, and Peter Danisch, Ludwigshafen, both of Germany, assignors to BASF Aktiengesellschaft, Ludwigshafen, Germany

PCT No. PCT/EP95/00418, § 371 Date Aug. 15, 1996, § 102(e) Date Aug. 15, 1996, PCT Pub. No. WO95/22627, PCT Pub. Date Aug. 24, 1995

PCT Filed Feb. 6, 1995, Ser. No. 687,447

Claims priority, application Germany, Feb. 16, 1994, 44 04 890.4

Int. Cl.⁶ C14C *9/00;* **C08L** *83/06*

U.S. Cl. 8—94.23 **8 Claims**

1. A process for the water repellant treatment of leather and skins, comprising contacting leather or a skin with carboxyl-containing polysiloxanes in an aqueous emulsion in the presence of emulsifiers, wherein said polysiloxanes have a polymer main chain which is functionalized with carboxyl groups, wherein the carboxyl groups are bonded to the polymer main chain in the form as teeth in a comb via spacer groups in the form of linear or branched [C_2—] C_5–C_{40}-alkylene groups optionally interrupted by up to 8 non-neighboring oxygen atoms or groups of the formula —NR^1—, —CO— or —CO—NR^1— and in addition optionally carry up to 5 carboxyl groups or carboxamido groups of the formula —CO—NR^1R^2, where R^1 and R^2 are each hydrogen or C_1–C_4-alkyl, the spacer groups being bonded to the polymer main chain via a direct bond or via an oxygen atom or a group of the formula —NR^1—, —CO—, —CO—NR^1— or —CO—O—.

5,702,491

PORTABLE HYDROGEN GENERATOR

Eugene Long, Boulder; Jeff Schmidt, Superior, and Frank Lynch, Conifer, all of Colo., assignors to Ball Corporation, Muncie, Ind.

Division of Ser. No. 476,729, Jun. 7, 1995, Pat. No. 5,593,640. This application Sep. 20, 1996, Ser. No. 716,965

Int. Cl.⁶ B01J *7/02*

U.S. Cl. 48—197 R **6 Claims**

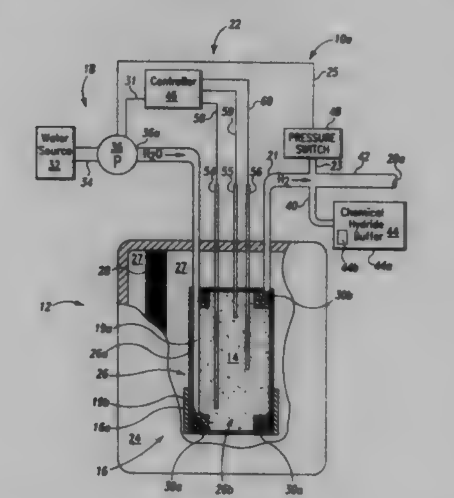

1. A method for generating hydrogen, comprising the steps of:

placing a first chemical hydride in a thermally isolated container;

heating said first chemical hydride to a predetermined temperature;

hydrolyzing said first chemical hydride only after said first chemical hydride reaches said predetermined temperature;

recovering hydrogen from said container; and

controlling an amount of hydrogen generated by said hydrogen generator.

5,702,492

SEMICONDUCTOR WAFER HUBBED SAW BLADE AND PROCESS FOR MANUFACTURE OF SEMICONDUCTOR WAFER HUBBED SAW BLADE

Charles N. Elsbree, Santa Rosa, Calif., assignor to Dynatex International, Santa Rosa, Calif.

Division of Ser. No. 357,504, Dec. 16, 1994, Pat. No. 5,588,419. This application Jun. 11, 1996, Ser. No. 660,587

Int. Cl.⁶ B28D *1/04*

U.S. Cl. 51—307 **7 Claims**

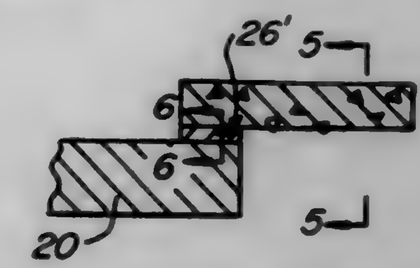

1. In a process of fabricating a cutting rim having nickel/embedded abrading particles on a circular aluminum saw blade hub, the process having the steps of:

plating zinc to the periphery of the aluminum saw blade hub;

plating copper over the zinc;

plating nickel and abrading particles over the copper to form a nickel/embedded abrading particles layer;

removing the nickel/embedded abrading particles layer and the copper from a radial edge and one side of the saw blade;

removing aluminum to expose the copper layer; and

removing the exposed copper layer to expose the abrading particles for cutting;

the improvement comprising:

plating the copper with abrading particles whereby, when the plated nickel/embedded abrading particles layer is plated, the abrading particles extend across the copper/nickel interface.

5,702,493

WELDING FUME FUNNEL WITH MAGNETIC COUPLING MEANS

Randy Roger Everetts, R.R. #2, Box 424, Tunkhannock, Pa. 18657, and Charles Clinton Everetts, R.R. #1, Box 320, Dallas, Pa. 18612

Filed Oct. 31, 1996, Ser. No. 742,210

Int. Cl.⁶ B01D *46/12*

U.S. Cl. 55—356 **9 Claims**

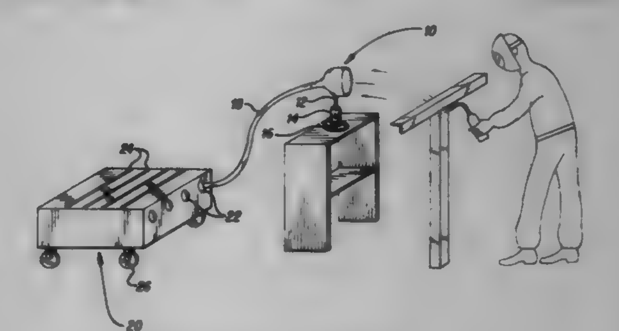

1. A smoke removal device, comprising:

a portable funnel having a wide opening and an opposing narrow opening;

a base for supporting said portable funnel;

a magnet contained within said base for removably mounting said base to a supporting metallic surface;

a lever for raising and lowering said magnet within said base;

a vacuum device including:

a housing having an inlet valve and an outlet,

a plurality of filters arranged in series within said housing between said inlet valve and said outlet, and

a motorized fan located within said outlet;

a hose connecting said narrow opening of said portable funnel to said inlet valve of said vacuum device; and
a flow control valve in said narrow opening of said portable funnel for controlling the amount of flow through said portable funnel.

5,702,494
AIRBAG FILTER ASSEMBLY AND METHOD OF ASSEMBLY THEREOF
Thomas L. Tompkins, Woodbury; Ryan C. Shirk, Mendota Heights, both of Minn.; Steven C. Schroeer, New Richmond, Wis.; Richard P. Merry, White Bear Lake, Minn.; Troy K. Ista, River Falls, and Richard L. Bloom, Woodville, both of Wis., assignors to Minnesota Mining and Manufacturing Company, St. Paul, Minn.
Continuation of Ser. No. 489,082, Jun. 9, 1995, abandoned. This application Jun. 3, 1996, Ser. No. 656,841
Int. Cl.⁶ B01D *29/23;39/20;46/24*
U.S. Cl. 55—498 **32 Claims**

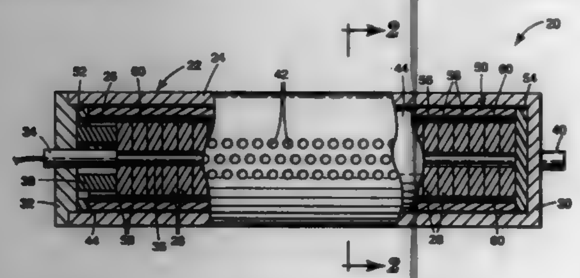

1. An airbag inflation filter comprising:
a substantially rigid support tube having gas permeable perforations therethrough;
a filtering element formed from a continuous inorganic strand that is helically wound around the support tube to form one or more layers covering the perforations through the support tube, each convolution of said strand extends at an angle in at least one layer of from about 75 degrees to about 85 degrees to the axis of the support tube; and
a diffusion layer adjacent the perforations through the support tube, the diffusion layer being formed of a metal mesh having gas permeable perforations therethrough smaller than the perforations through the support tube.

5,702,495
SILICA GLASS MEMBER FOR UV-LITHOGRAPHY, METHOD FOR SILICA GLASS PRODUCTION, AND METHOD FOR SILICA GLASS MEMBER PRODUCTION
Hiroyuki Hiraiwa, Yokohama; Kazuhiro Nakagawa, Hachioji; Hiroki Jinbo, Kawasaki; Jun Takano, and Seishi Fujiwara, both of Sagamihara, all of Japan, assignors to Nikon Corporation, Tokyo, Japan
Division of Ser. No. 193,474, Feb. 8, 1994. This application Jun. 7, 1995, Ser. No. 479,180
Claims priority, application Japan, Feb. 10, 1993, 5-22293; Feb. 10, 1993, 5-22294; Apr. 23, 1993, 5-98218; Dec. 27, 1993, 5-330740
Int. Cl.⁶ C03B *20/00*
U.S. Cl. 65—17.1 **7 Claims**

1. A method of producing a silica glass member, comprising emitting Si compound gas, oxygen gas and hydrogen gas from a burner to deposit silica soot by the direct method on a rotating target in such a manner as to form an ingot of transparent silica glass, cutting out of the ingot a silica glass body of cylindrical form with a center substantially at an axis of rotational symmetry of the ingot, and performing heat treatment of the silica glass body, wherein the heat treatment is carried out by using a furnace having a temperature distribution of central symmetry and by making a

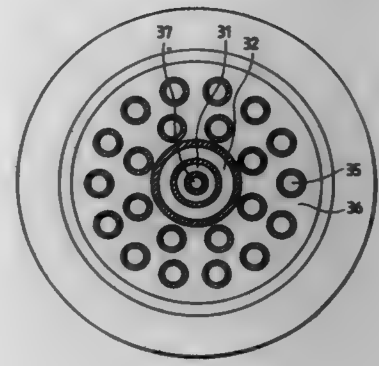

central axis of the furnace substantially coincident with a central axis of the silica glass body.

5,702,496
SHAPED GLASS SHEET AND A PROCESS FOR THE PREPARATION THERROF
Shotaro Tomozane; Hirokazu Kidou, and Yukikazu Nakabayashi, all of Toyama, Japan, assignors to Suntec Corporation, Toyama, Japan
Division of Ser. No. 123,375, Sep. 17, 1993, Pat. No. 5,589,248. This application Jul. 16, 1996, Ser. No. 680,957
Claims priority, application Japan, Sep. 18, 1992, 4-273386; Sep. 21, 1992, 4-274802; Feb. 25, 1993, 5-59342; Mar. 1, 1993, 5-62491
Int. Cl.⁶ C03B *21/00*
U.S. Cl. 65—102 **14 Claims**

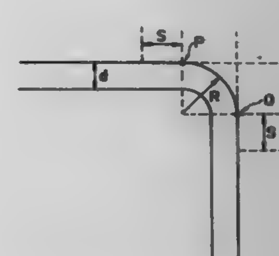

1. A process for the preparation of a shaped glass sheet having at least one linear bend and two straight sections extending from the bend, comprising the steps of:
applying an electrically conductive material to at least one surface of said glass sheet to form a linear bend line,
heating areas of the glass sheet spaced at least 3 cm from the bend line transverse to the bend line to temperatures between 200° C. and 500° C. lower than a softening point of the glass sheet,
heating areas of the glass sheet spaced less than 3 cm from the bend line transverse to the bend line to temperatures higher than said temperatures of the areas at least 3 cm from the bend line, but at least 50° C. lower than the softening point of the glass sheet,
applying an electrical potential to the electrically conductive material of the bend line to heat the glass along the bend line to at least the softening point of the glass sheet and then
bending the glass sheet along the bend line to form a shaped glass sheet having a sharp bend, wherein a radius of curvature of an outer circumference of the bend transverse to the bend is at most 4 times a thickness of the glass sheet and the straight sections of the shaped glass sheet are substantially flat.

5,702,497
METHOD OF PRODUCING AN OPTICAL FIBER PREFORM FROM A PLURALITY OF TUBES HAVING DIFFERENT THERMAL CONDUCTIVITIES
Seung-Hun Oh; Gyun-Hae Doh, and Sun-Woong Kang, all of Goomi, Rep. of Korea, assignors to SamSung Electronics Co., Ltd., Suwon, Rep. of Korea
Filed Oct. 10, 1995, Ser. No. 541,555
Claims priority, application Rep. of Korea, Oct. 7, 1994, 25705/1994
Int. Cl.⁶ C03B *37/027*
U.S. Cl. 65—412 **13 Claims**

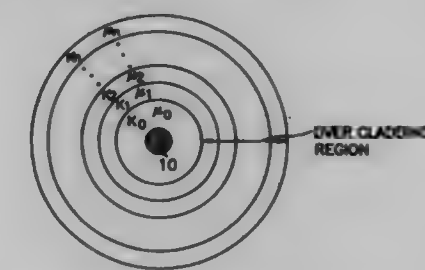

1. A method of producing an optical fiber preform, the optical fiber preform being used to form a single-mode optical fiber, said method comprising the steps of:
forming a first quartz tube having a first thermal conductivity, said first quartz tube being used as a clad;
depositing a core layer and a clad layer inside said first quartz tube;
forming a preliminary preform by heating said first quartz tube having said core layer and said clad layer deposited therein;
forming a second quartz tube having a second thermal conductivity lower than said first thermal conductivity; and
over-cladding said second quartz tube over said preliminary preform by heating to produce said optical fiber preform.

5,702,498
PROCESS FOR CARBON-COATING SILICATE GLASS FIBERS
Jianzhong Huang, Westerville, Ohio, assignor to Owens-Corning Fiberglas Technology, Inc., Summit, Ill.
Filed Aug. 9, 1995, Ser. No. 513,197
Int. Cl.⁶ C03B *37/02*
U.S. Cl. 65—453 **3 Claims**

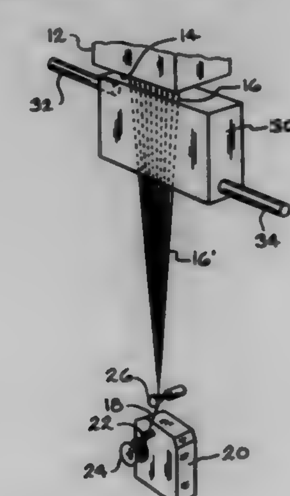

1. A method for producing reinforcement or textile glass fibers comprising:
discharging a plurality of molten silicate glass streams from a bushing;
contacting the plurality of molten glass streams with a hydrocarbon gas near the bushing;
thermally decomposing hydrocarbon gas using only heat contained in the plurality of molten glass streams; wherein the plurality of molten glass streams has a temperature ranging from 700° C. to 2000° C.;
wherein the thermal decomposing cools the plurality of molten glass streams to a plurality of continuous glass fibers and coats each glass fiber with a carbon coating;
simultaneously with the thermal decomposing, attenuating the plurality of molten glass streams into the plurality of continuous glass fibers; and
gathering the plurality of continuous glass fibers into a strand.

5,702,499
WASTE CONVERSION BY LIQUID THERMOPHILIC AEROBIC DIGESTION
Hubert J. Timmenga, Vancouver, Canada, assignor to Sim Associates, Vancouver, Canada
Continuation-in-part of Ser. No. 181,916, Jan. 18, 1994, abandoned. This application Oct. 26, 1994, Ser. No. 329,735
Int. Cl.⁶ C05F *9/04;11/08*
U.S. Cl. 71—9 **11 Claims**

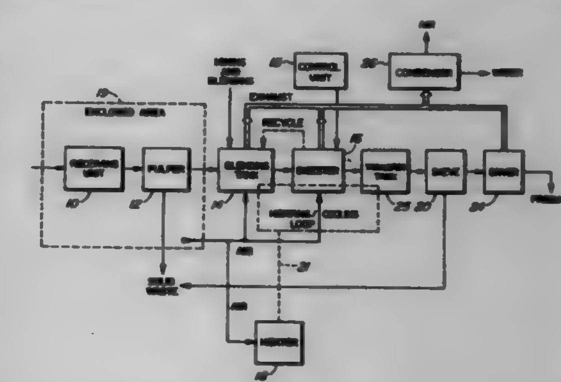

1. An aerobic batch process for the conversion of organic solid waste material by liquid thermophilic and solely aerobic digestion, comprising the steps of:
comminuting a batch of the organic solid waste material:
adjusting the moisture content of the comminuted material to at least 90% parts by weight of water;
mixing the comminuted waste material with a thermophilic aerobic micro-organism;
adjusting the pH of the mixture to 5.5–7.5;
supplying heat and oxygen to the mixture to effect thermophilic and solely aerobic digestion of the mixture;
testing the mixture during the aerobic digestion to detect when the mixture has reached a stabilized state in which available organic material and nutrients in the mixture have been consumed by the micro-organisms and in which the micro-organisms have not started to consume lignin or cellulose to any substantial extent;
the testing comprising measuring at least one of the pH level, the phosphate content, the nitrate content, the sulphate content and the carbon-to-nitrogen ratio of the mixture;
terminating the thermophilic and solely aerobic digestion process when the stabilized state is detected; and
subsequently drying the mixture.

5,702,500

INTEGRATED PROCESS FOR THE RECOVERY OF METALS AND FUSED ALUMINA FROM SPENT CATALYSTS

Zenon R. Llanos, Lake Jackson, Tex.; Guido F. Provoost, Ghent, Belgium; William G. Deering, Angleton, Tex., and Frans J. Debaene, Merelbeke, Belgium, assignors to Gulf Chemical & Metallurgical Corporation, Freeport, Tex.

Filed Nov. 2, 1995, Ser. No. 552,075

Int. Cl.[6] C22B *4/04;9/16;23/00;21/00*

U.S. Cl. 75—10.25 **16 Claims**

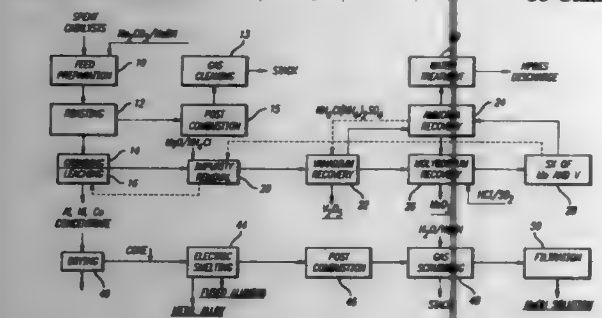

1. An integrated process for the treatment of spent catalysts containing mainly molybdenum, vanadium, nickel, cobalt, alumina and silica to produce ammonium metavanadate, vanadium pentoxide, molybdic trioxide, fused alumina and a high grade nickel/cobalt alloy essentially free of aluminum, the integrated process comprising the following steps:

roasting the spent catalysts in the presence of a sodium salt at temperatures between 650°–900 ° C.;

grinding and leaching the roasted material to obtain a Mo/V laden solution and a residue containing aluminum, nickel and cobalt;

separating the vanadium from molybdenum by selective precipitation to produce vanadium pentoxide and molybdic trioxide;

reducing the aluminum, nickel and cobalt containing residue in an electric furnace to produce a nickel/cobalt alloy, fused alumina; and

recovering sodium in a concentrated sodium hydroxide solution.

5,702,501

CLAYISH COMPOSITION FOR MOLDING SHAPED ARTICLE OF NOBLE METAL AND METHOD FOR PRODUCTION OF SINTERED ARTICLE OF NOBLE METAL

Yukio Osawa, Machida; Katsuhiko Shimamoto, Hino; Shinichi Ishigaki, Kanagawa-ken; Hitoshi Araki, Tachikawa; Yukio Nakata, Hachioji, and Atsushi Fujimaru, Fuchuu, all of Japan, assignors to Aida Chemical Industries Co., Ltd., Tokyo, Japan

Filed Sep. 10, 1996, Ser. No. 711,788

Claims priority, application Japan, Feb. 23, 1996, 8-060241

Int. Cl.[6] B22F *1/00*

U.S. Cl. 75—255 **14 Claims**

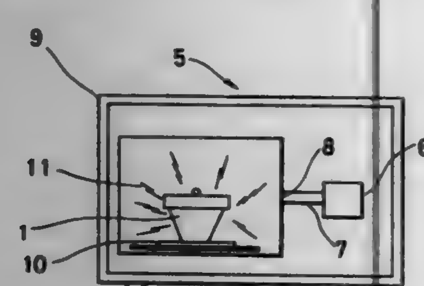

1. A clayish composition for producing a molded article of noble metal, consisting essentially of at least one noble metal powder selected from the group consisting of noble metal powders and noble metal alloy powders, starch and a water-soluble cellulose resin as organic binder and water, wherein the contents of said starch and said water-soluble cellulose resin each falls in the range of 0.02–3.0% by weight, based on the total amount of said organic binder and said noble metal powder.

5,702,502

METHOD FOR DIRECT USE OF CHROMITE ORE IN THE PRODUCTION OF STAINLESS STEEL

David M. Kundrat, Cincinnati; Allan M. Smillie, Middletown, and Richard C. Sussman, West Chester, all of Ohio, assignors to Armco Inc., Middletown, Ohio

Filed Dec. 14, 1995, Ser. No. 573,316

Int. Cl.[6] C21B *15/00;* **C21C** *7/00;* **C22B** *4/04;9/00*

U.S. Cl. 75—501 **43 Claims**

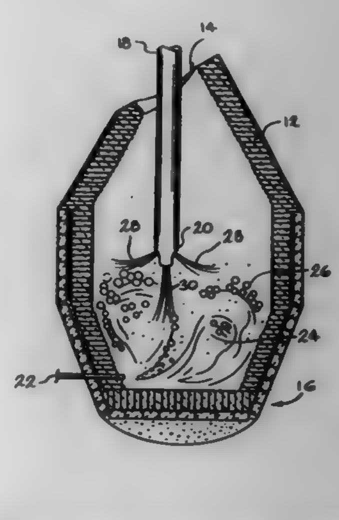

1. A method of producing stainless steel by smelting metal oxide insitu in a refining reactor, comprising the steps of:

providing an iron/slag bath mixture within the reactor,

the iron bath containing dissolved carbon,

the reactor including means for bottom-stirring the iron bath,

charging an oxygen-bound chromium metal into the iron bath,

injecting an oxygen-containing gas through the stirring means to effect decarburization and vigorously stirring the iron bath, slag, and oxygen-bound metal thereby forming a chromium alloy bath having the carbon reduced to its final specification,

charging a metalloid reductant into the reactor, and

injecting a non-oxidizing gas through the stirring means to rinse the alloy bath until dynamic equilibrium is sustained and chromium yield is maximized.

5,702,503

COMPOSITE GAS SEPARATION MEMBRANES AND MAKING THEREOF

Man-Wing Tse Tang, Alhambra, Calif., assignor to UOP, Des Plaines, Ill.

PCT No. PCT/US94/06339, § 371 Date Dec. 12, 1995, § 102(e) Date Dec. 12, 1995, PCT Pub. No. WO94/29002, PCT Pub. Date Dec. 22, 1994

PCT Filed Jun. 3, 1994, Ser. No. 557,119

Int. Cl.[6] B01D *53/22;69/12;71/64*

U.S. Cl. 95—45 **37 Claims**

1. A composite membrane comprising a porous asymmetric support having a first and a second surface area, said first surface area contacting an ultrathin polymer layer with a thickness less than 100 nm, said first surface area having an average pore diameter of about 5 nm to about 20 nm, and said second surface

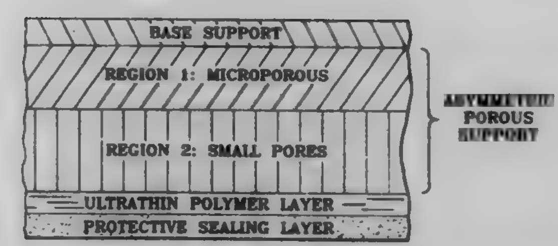

area having a pore diameter greater than that of the first surface area.

5,702,504

VACUUM PRESSURE SWING ADSORPTION PROCESS

Herbert Raymond Schaub, East Amherst, and James Smolarek, Boston, both of N.Y., assignors to Praxair Technology, Inc., Danbury, Conn.

Filed Mar. 7, 1996, Ser. No. 611,942

Int. Cl.[6] B01D *53/047*

U.S. Cl. 95—101 **12 Claims**

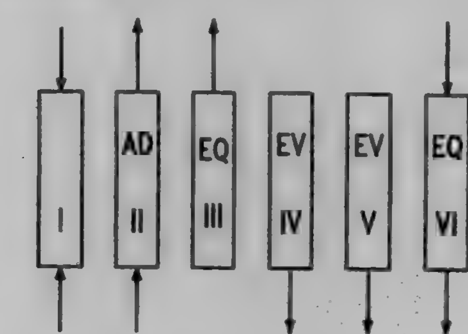

1. In a vacuum pressure swing adsorption process for the separation of a less readily adsorbable component of a feed gas mixture containing said component and a more readily adsorbable component in an adsorption system having two or more adsorbent beds containing adsorbent material capable of selectively adsorbing the more readily adsorbable component of said feed gas mixture, said process being carried out in each adsorbent bed, on a cyclic basis, and comprising the following steps:

(a) introducing a feed gas mixture to a feed end of the adsorbent bed while product gas is simultaneously added to a product end of the bed, the bed being pressurized thereby from a lower intermediate rising pressure to an intermediate pressure;

(b) passing the feed gas mixture to the feed end of the bed to increase the pressure of the bed from the intermediate pressure to an upper adsorption pressure, with recovery of less readily adsorbable component from the product end of the bed during or at the end of said increase in pressure of the bed;

(c) cocurrently depressurizing the bed from the upper adsorption pressure to an intermediate falling pressure, with passage of gas from the product end of the bed for use as pressure equalization gas in another bed in the system;

(d) countercurrently depressurizing the bed, with the evacuation of said more readily adsorbable component from the feed end thereof, thereby reducing the pressure of the bed from the intermediate falling pressure to a lower, subatmospheric desorption pressure; and

(e) discharging additional quantities of gas from the feed end of the bed, while simultaneously introducing said less readily adsorbable component to the product end of the bed, the pressure of the bed increasing from said lower, subatmospheric desorption pressure to the intermediate rising pressure, the improvement comprising:

(1) following step (c) and prior to step (d), countercurrently depressurizing the bed, with discharge of gas from the feed end thereof, while simultaneously cocurrently depressurizing the bed with passage of gas from the product end thereof for use as pressurization gas in a bed in the system undergoing repressurization, the bed pressure decreasing from the intermediate falling pressure to a lower intermediate falling pressure; and

(2) following step (d) and prior to step (e), discharging said more readily adsorbable component from the feed end of the bed, while simultaneously introducing said less readily adsorbable component as purge gas to the product end of the bed, the pressure of the bed remaining essentially at said lower, subatmospheric desorption pressure,

whereby the productive capacity of the adsorption system is increased and the efficiency of the overall process is enhanced.

5,702,505

METHOD FOR COLLECTING VOLATILE ORGANIC SUBSTANCES

Jun Izumi; Akinori Yasutake; Hiroyuki Tsutaya, all of Nagasaki; Takayuki Harada, and Kenichi Hamada, both of Shimonoseki, all of Japan, assignors to Mitsubishi Jukogyo Kabushiki Kaisha, Tokyo, Japan

Filed May 8, 1996, Ser. No. 646,488

Claims priority, application Japan, May 10, 1995, 7-112056

Int. Cl.[6] B01D *53/04;53/26*

U.S. Cl. 95—115 **6 Claims**

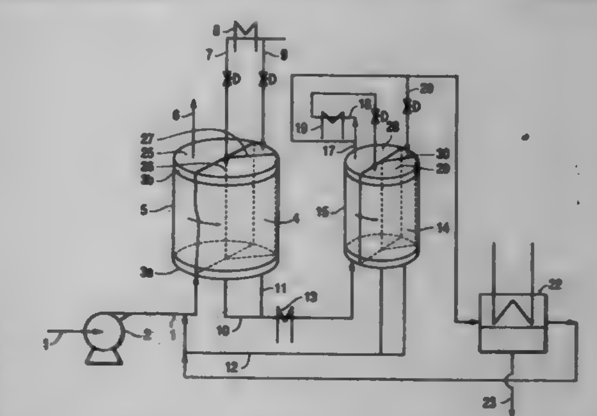

1. A method for collecting volatile organic substances by processing gas containing volatile organic substances and moisture with a moisture absorbent and another absorbent, comprising the following steps:

introducing the gas containing the volatile organic substances and the moisture into an adsorbing tower filled with said another absorbent for selectively adsorbing the volatile organic substances and being in an adsorbing process under a relatively low temperature condition to remove the volatile organic substances from the gas containing the volatile organic substances and moisture, and discharging the gas as a moisture containing gas from which the volatile organic substances are removed to outside the system;

desorbing and regenerating the adsorbents which has adsorbed the volatile organic substances by a purge gas under a relatively high temperature condition in a regenerating process;

introducing the desorbed gas containing the volatile organic substances at a high concentration discharged from the adsorbent regenerating process into a dehumidifying tower filled with the moisture absorbent for selectively adsorbing the moisture and being in the adsorbing process under a relatively low temperature condition and removing the moisture therefrom;

regenerating the moisture absorbent that has absorbed the moisture by desorbing the moisture by the purge gas under a relatively high temperature condition in a regenerating process; and

introducing the dry gas containing a high concentration of volatile organic substances discharged from the absorbing process in said dehumidifying tower into a liquefier and

cooling and/or pressuring the dry gas to be liquefied to collect the volatile organic substances.

5,702,506

METHOD AND DEVICE FOR AEROSOL SIZE-SELECTIVE SAMPLING

Tung-Sheng Shih; Wen-Yu Yeh; Chih-Chieh Chen, and Chane-Yu Lai, all of Taipei, Taiwan, assignors to Institute of Occupational Safety and Health, Council of Labor Affairs, Executive Yuan, Taipei, Taiwan

Filed Oct. 16, 1996, Ser. No. 733,081

Int. Cl.[6] B01D *46/12*

U.S. Cl. 95—287 **14 Claims**

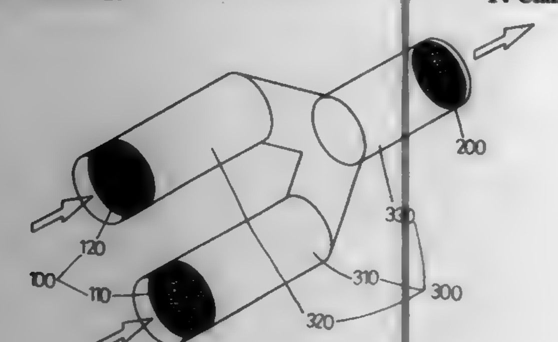

1. An aerosol size-selective sampling method comprising taking an aerosol sample from a given atmospheric air by using an aerosol size-selective sampling device comprising a pre-filter, a base housing and a collector, wherein said pre-filter comprises two or more porous filtration materials disposed in an air inlet end of said base housing in a parallel manner, and said collector disposed in an air outlet end of said base housing, and wherein said atmospheric air is passed through said two or more porous filtration materials of said pre-filter in a parallel and diverting pattern before it is allowed to pass in a converging manner through said collector located in said air outlet end of said base housing, and said pre-filter is able to attain a desired penetration rate profile as a function of an aerodynamic diameter of aerosol contained in the atmospheric air within a predetermined range of said aerodynamic diameter.

5,702,507

AUTOMATIC AIR CLEANER

Shou-Ting Wang, Taipei Hsien, Taiwan, assignor to Yih Change Enterprise Co., Ltd., Taipei Hsien, Taiwan

Filed Sep. 17, 1996, Ser. No. 718,999

Int. Cl.[6] B03C *3/155*

U.S. Cl. 96—55 **2 Claims**

1. An automatic air cleaner comprising a case having a central cavity disposed at the center and through slots at the rear and a base, wherein a liftable cover having stop blocks and an insert clasp disposed at the front and rear thereof respectively is provided to close the central cavity of said case; said case is characterised by that;

a plurality of ribs are diposed at both inner lateral walls of said central cavity, defining a number of receiving grooves therebetween for a dust collecting plate and a filter plate to be inserted therein; said dust collecting plate has a plurality of rectangular parallel dust collecting means juxtaposed thereon and a plurality of electric discharge rods extending alternatively between said dust collecting means in opposite direction; dirty air passing through the dust collecting means is then further cleaned by the filter plate provided with deodorant active carbon thereon and perfumed by an odoriferous agent disposed at the lower front of said filter plate; an ozone tube, covered with conductive electric wire outside and retained by pole holders behind the filter plate for easy replacing and withdrawing, functions with electrodes to generate

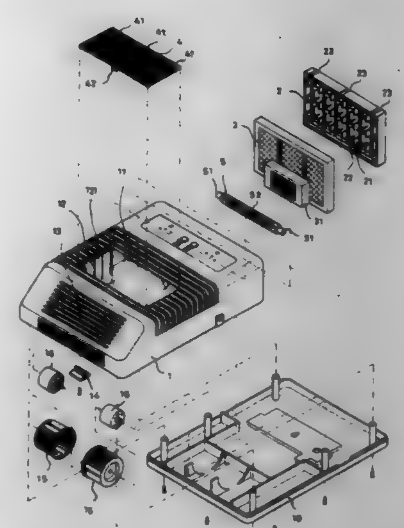

ozone so as to terminate the bacteria existing in the air passing out of the filter plate; finally anion pins adapted to electrify the dust left over in the cleaned air so that when the fresh air delivered out of the through slots by fans driven by motors disposed at both lateral sides of the rear of the case, the dust electrified will drop onto the floor.

5,702,508

CERAMIC DESICCANT DEVICE

Jose Moratalla, 3359 Lake Shore La., Clearwater, Fla. 34621

Filed Jan. 25, 1996, Ser. No. 590,391

Int. Cl.[6] B01D *53/06;53/26*

U.S. Cl. 96—118 **15 Claims**

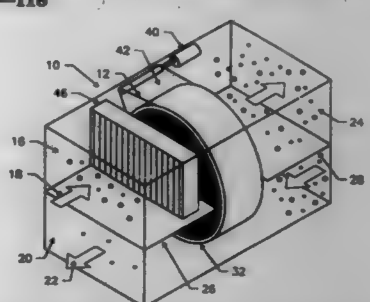

1. A new and improved ceramic rotor to be used as a media to dry gasses comprising, in combination:

a housing having an input area with a first path of travel for receiving moisture-ladened air to be dried and an output area with a second path of travel in a direction opposite from the first path of travel for removing moisture from air partially ladened with moisture with a turnaround zone to direct air from the first path of travel to the second path of travel, the turnaround zone being located in the housing remote from the input area and the output area, the housing having baffles to separate the first path of travel from the second path of travel;

a cylindrically shaped shell positioned within the housing having an axis in the plane of the baffles, a plurality of openings extending along the length of the shell, the openings providing elongated surfaces adapted to be contacted by moisture ladened air moving in the first path of travel and by air partially ladened with moisture moving in the second path of travel, such surfaces having desiccant capabilities for the extraction of moisture from air passed therethrough;

drive means to rotate the shell about its axis to sequentially move different portions of the cylindrical shell and its openings between the first path of travel and the second path of travel; and

a heater located between the shell and input area within the first path of travel.

5,702,509

MASONRY TREATMENT COMPOSITION

Mark J. Pellerite, Woodbury; Larry D. Rich, Oakdale, both of Minn., and James F. Sanders, St. Joseph Township, Wis., assignors to Minnesota Mining and Manufacturing Company, St. Paul, Minn.

Filed Dec. 22, 1995, Ser. No. 577,643

Int. Cl.[6] C09D *5/00;183/08;183/07;183/06*

U.S. Cl. 106—2 **22 Claims**

1. A self-emulsifying, liquid treatment composition for rendering substrates both water- and oil-repellent comprising the polysiloxane reaction product of (a) at least one alkoxysilane, alkoxysiloxane, or siloxane compound comprising at least one hydrophobic moiety selected from the group consisting of alkyl, aryl, aralkyl, and alkaryl moieties; (b) at least one alkoxysilane, alkoxysiloxane, or siloxane compound comprising at least one hydrophilic moiety selected from the group consisting of protonated and unprotonated azaalkyl and silyl-containing azaalkyl moieties; and/c) at least one fluorine-containing alkoxysilane compound represented by the average general formula:

$$[R_f—Z—R^5]_{h'}Si(R^2_{h''})(OR^2)_{4-h'-h''}$$

wherein each R_f is independently a perfluoroalkyl group having at least four carbon atoms and optionally containing one or more catenary ether oxygen atoms; each R^5 is independently selected from the group consisting of alkylene groups having from 2 to about 11 carbon atoms, arylene groups having from 6 to about 10 carbon atoms, and alkarylene groups having from 7 to about 16 carbon atoms; each R^2 is independently an alkyl group having from 1 to about 4 carbon atoms; h' is an integer of 1 or 2; h" is an integer of 0 or 1 ; the sum of h' and h" is less than or equal to 2; and each Z is independently a divalent moiety selected from the group consisting of a covalent bond, $—(CH_2)_nS—$, $—(CH_2)_{n+1}NR^2—$, $—(CH_2)_nSO_2NR^3—$, $—(CH_2)_nC(=O)NR^3—$, $—(CH_2)_nSO_2NR^2CH_2CH_2O(C=O)CH_2CH_2NR^3—$, and $—(CH_2)_nO—$, where n is an integer of 0 to about 5, n' is an integer of 1 to about 5, R^2 is an alkyl group having from 1 to about 4 carbon atoms, and R^3 is selected from the group consisting of hydrogen and alkyl groups having from 1 to about 4 carbon atoms with the provision that Z is not a covalent bond when R^5 is alkylene.

5,702,510

AQUEOUS INK OF PIGMENT TYPE

Satoshi Yoshida; Hideki Yanagi; Kouichi Sakai, and Masayoshi Nawa, all of Tochigi, Japan, assignors to Kao Corporation, Tokyo, Japan

PCT No. PCT/JP95/02582, § 371 Date Sep. 18, 1996, § 102(e) Date Sep. 18, 1996, PCT Pub. No. WO96/26248, PCT Pub. Date Aug. 29, 1996

PCT Filed Dec. 15, 1995, Ser. No. 704,609

Claims priority, application Japan, Feb. 20, 1995, 7-031095

Int. Cl.[6] C09D *11/02*

U.S. Cl. 106—31.6 **12 Claims**

1. An aqueous ink, comprising:

a pigment, water, a water-soluble solvent, a sulfite and a dispersant which is member selected from the group consisting of an anionic surface-active agent, a cationic surface-active agent, an amphoteric surface-active agent, a nonionic surface-active agent, protein, a natural rubber, a glucoxide, a cellulose derivative, a lignin, sulfonate, a natural polymer, a nonioinic polymer and a copolymer of a monomer (a), represented by the formula (A), and one or more monomers (b) selected from the group consisting of compounds represented by formulae (B) and (C):

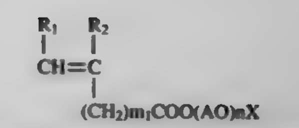
(A)

wherein R_1, and R_2, which may be the same or different, each represent a hydrogen atom or a methyl group, m_1 represents an integer of 0 to 2, AO represents an oxyalkylene group having 2 to 3 carbon atoms, n represents an integer of 110 to 300, and X represents a hydrogen atom or an alkyl group having 1 to 3 carbon atoms,

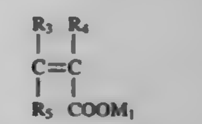
(B)

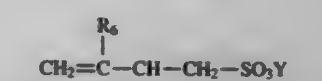
(C)

wherein R_3, R_4 and R_5, which may be the same or different, each represent a hydrogen atom or a methyl group or $(CH_2)m_2COOM_2$, R_6 represents a hydrogen atom, a methyl group, M_1, M_2 and Y, which may be the same or different, each represent a hydrogen atom, an alkali metal, an alkaline earth metal, ammonium, an alkylammonium or a substituted alkylammonium, m_2 represents an integer of 0 to 2, with the compounds represented by the general formula (B) including acid anhydrides thereof, wherein the weight ratio of pigment to sulfite ranges from 1/10 to 10/1.

5,702,511

INK COMPOSITION FOR MARKING AND AUTHENTICATING OBJECTS

Pierre de Saint-Romain, and Alain Heraud, both of Valence, France, assignors to Image S.A., Bourg-Les-Valence, France

Filed Jan. 25, 1996, Ser. No. 591,802

Claims priority, application France, Feb. 14, 1995, 95 01665

Int. Cl.[6] C09D *11/00*

U.S. Cl. 106—31.32 **12 Claims**

1. Ink composition for marking and authenticating objects, comprising at least one non-photochromic pigment or dye, a photochromic pigment or dye and a solvent, the photochromic pigment or dye changing absorption spectrum under the effect of a first light emitting in a wavelength belonging to the ultraviolet range, so that when it is then illuminated and only by a second light emitting in a wavelength belonging to the visible range, it has a colour different from that which it had, under the illumination of said second light, prior to its illumination by said first light, said colour also being different from that of the non-photochromic pigment or dye when the latter is illuminated by said second light.

5,702,512

OIL INK COMPOSITION

Masanao Yano, Yorii-machi; Takeshi Yadoiwa, Kamisadori-machi, and Chie Yanase, Kaizawa-machi, all of Japan, assignors to Mitsubishi Pencil Co., Ltd., Tokyo, Japan

Filed Feb. 26, 1996, Ser. No. 607,317

Claims priority, application Japan, Feb. 28, 1995, 7-040041

Int. Cl.[6] C09D *11/02*

U.S. Cl. 106—31.75 **8 Claims**

1. Oil ink composition comprising titanium dioxide as pigment, resin, organic solvent, a compound (A) which has at least one amide group (—CONH—) or amino group (—N<) and a compound (B) selected from the group consisting of phosphoric acid, pyrophosphoric acid, metaphosphoric acid, polyphosphoric acid, lauryl phosphate, polyoxylpropylene oleyl ether phosphate, polyoxylethylene(4) lauryl ether phosphate, and dipolyoxyethylene nonylphenyl ether phosphate.

5,702,513

CORRECTION AND MARKING MATERIALS

Brian Edward Causton, Reading, and Michael Alexiou, Twickenham, both of United Kingdom, assignors to The Gillette Company, Boston, Mass.

PCT No. PCT/US94/11018, § 371 Date Aug. 2, 1996, § 102(e) Date Aug. 2, 1996, PCT Pub. No. WO95/09205, PCT Pub. Date Apr. 6, 1995

PCT Filed Sep. 28, 1994, Ser. No. 619,714

Claims priority, application United Kingdom, Sep. 30, 1993, 9320162

Int. Cl.^{6} C09D *10/00*

U.S. Cl. 106—31.93 **23 Claims**

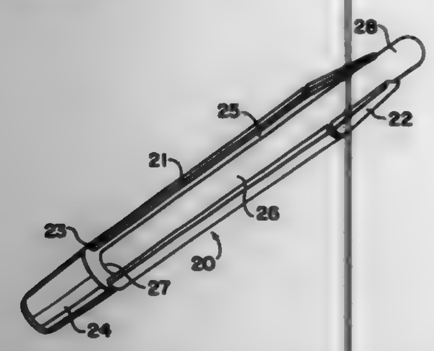

1. A correction or marking material which comprises a correction or marking agent dispersed in a solid carrier, which carrier upon working contact with a substrate becomes temporarily liquid to deposit thereon as a dry coating including said agent therein and having essentially the same composition as said correction or marking material.

5,702,514

METHOD FOR MOLDING DENTAL RESTORATIONS AND RELATED APPARATUS

Richard W. Petticrew, Odessa, Fla., assignor to TEC Ventures, Inc., Olds Mar, Fla.

Continuation-in-part of Ser. No. 250,926, May 31, 1994. This application Apr. 6, 1995, Ser. No. 417,682

Int. Cl.^{6} A01K *6/02*

U.S. Cl. 106—35 **4 Claims**

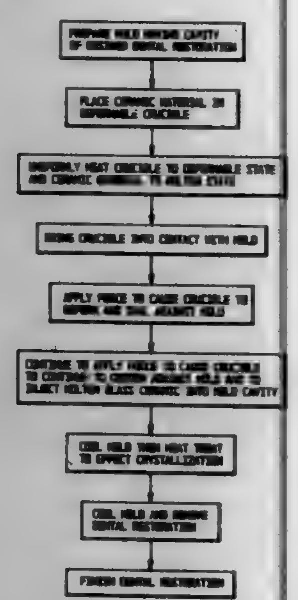

1. A dental restoration which is formed from a glass-ceramic material, which does not deform during heat treating, comprising the following composition (by weight percent),

Li_2O	8–15
Al_2O_3	1.5–5.0
SiO_2	60–85
Na_2O	0–2
K_2O	0–2
P_2O_5	1.5–5
ZrO_2	0–3
CaO	0–1
BaO + SrO + LaO	0–12
Coloring Oxides	0–5

wherein said dental restoration is further altered by applying one or more layer(s) of a porcelain material to said dental restoration and fusing said porcelain layer(s), wherein the C.T.E. of said porcelain material is slightly less than the C.T.E. of the glass ceramic material.

5,702,515

STABILISED SOLUTIONS OF POLYSACCHARIDE

Peter George Urben, Kenilworth, United Kingdom, assignor to Courtaulds Fibres (Holdings) Limited, London, United Kingdom

PCT No. PCT/GB95/02466, § 371 Date Mar. 21, 1997, § 102(e) Date Mar. 21, 1997, PCT Pub. No. WO96/12761, PCT Pub. Date May 2, 1996

PCT Filed Oct. 19, 1995, Ser. No. 809,399

Claims priority, application United Kingdom, Oct. 20, 1994, 9421134; Feb. 10, 1995, 9502650

Int. Cl.^{6} C08L *1/02;5/00;* **C09D** *101/02;105/00*

U.S. Cl. 106—200.2 **19 Claims**

1. A solution of a polysaccharide in a hydrated tertiary amine N-oxide, comprising (1) an aromatic compound containing a benzene ring bearing at least two substituents selected from the group consisting of hydroxy groups, primary amino groups and secondary amino groups and (2) a sulphur-containing compound containing an —SH group or an anion thereof or a precursor of such a compound, provided that the said sulphur-containing compound is not a carbocyclic arenethiol.

10. A process for making a shaped article of a polysaccharide including the steps of:

(a) dissolving the polysaccharide in a hydrated tertiary amine N-oxide to form a solution;

(b) extruding the solution through a die to form a shaped member;

(c) passing the shaped member through at least one water-containing bath, thereby removing the solvent from the shaded member and forming the shaped article; and

(d) drying the shaped article,

characterised by incorporating in the solution (1) an aromatic compound containing a benzene ring bearing at least two substituents selected from the group consisting of hydroxy groups, primary amino groups and secondary amino groups and (2) a sulphur-containing compound containing an —SH group or an anion thereof or a precursor of such a compound, provided that the said sulphur-containing compound is not a carbocyclic arenethiol.

5,702,516

METHOD OF USING WATER SOLUBLE FOAMED STARCH FOR RECLAIMING PAINT OVER-SPRAY PARTICLES

John M. Spangler, Peoria, Ill., assignor to Caterpillar Inc., Peoria, Ill.

Filed Dec. 17, 1996, Ser. No. 768,825

Int. Cl.^{6} C09D *201/00;* **B01D** *39/16;46/10*

U.S. Cl. 106—287.35 **9 Claims**

1. A method of using water soluble foamed starch for reclaiming paint overspray particles from air, comprising the steps of:

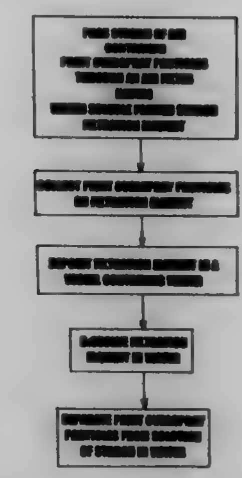

passing a stream of air containing paint overspray particles through an air filter assembly having a filtration element, said filtration element consisting essentially of water soluble foamed starch;

collecting said paint overspray particles on said filtration element;

depositing said filtration element containing said collected paint overspray particles in a vessel containing water;

dissolving said filtration element in said water and forming an aqueous solution of starch in water; and

separating said paint overspray particles from said aqueous solution of starch dissolved in water.

5,702,517

ADDITIVES FOR PLASTICS, IN PARTICULAR FOR PVC

Hubert Meixner, Ludwigshafen; Wolfgang Reuther, Heidelberg, and Volker Königstein, Maxdorf, all of Germany, assignors to BASF Aktiengesellschaft, Ludwigshafen, Germany

Filed Dec. 21, 1995, Ser. No. 576,227

Claims priority, application Germany, Dec. 22, 1994, 44 46 059.7

Int. Cl.^{6} C08H *5/00*

U.S. Cl. 106—316 **26 Claims**

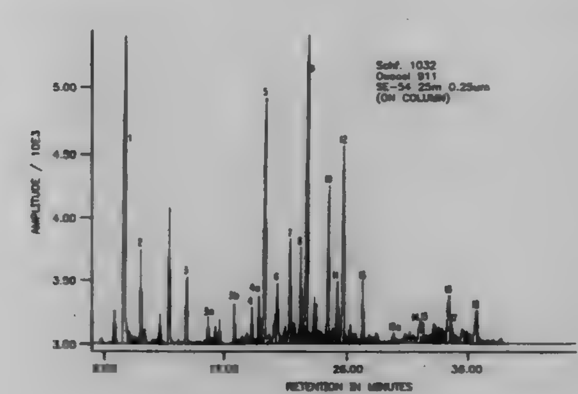

1. An additive for plastics, which comprises

a. 5–70 parts by weight of oxo oil containing 5–15 weight % of ether alcohols

b. 1–30 parts by weight of alkali metal or alkaline earth metal or zinc salts of organic acids of 8 to 18 carbon atoms

c. 0.5–5 parts by weight of antioxidants

d. 5–30 parts by weight of plasticizer

e. 5 to 50 parts by weight of organic phosphite.

5,702,518

GOLD PIGMENTS

Reiner Vogt, Darmstadt; Klaus Bernhard, Gross-Umstadt, and Gerhard Pfaff, Münster, all of Germany, assignors to Merck Patent Gesellschaft mit ceschrankter Haftung, Darmstadt, Germany

Filed Jun. 21, 1996, Ser. No. 667,513

Claims priority, application Germany, Jun. 23, 1995, 195 22 864.1

Int. Cl.^{6} C09C *1/36*

U.S. Cl. 106—439 **9 Claims**

1. A gold pigment comprising a substrate with multiple layers thereon, including a layer of titanium dioxide which is doped with carbon obtained by thermal decomposition of organic colloidal particles and an iron(III) oxide layer on the doped titanium dioxide layer.

5,702,519

FLAKY ALUMINUM OXIDE AND PEARLESCENT PIGMENT, AND PRODUCTION THEREOF

Katuhisa Nitta; Tan Ming Shau, and Jun Sugahara, all of Fukushima-ken, Japan, assignors to Merck Patent Gesellschaft mit ceschrankter Haftung, Darmstadt, Germany

Filed Sep. 13, 1996, Ser. No. 710,252

Claims priority, application Japan, Sep. 14, 1995, 7-260959

Int. Cl.^{6} C09C *1/36*

U.S. Cl. 106—442 **13 Claims**

1. Flaky aluminum oxide containing therein titanium oxide in an amount of about 0.1–4 wt. %, based on the aluminum oxide.

5,702,520

METHOD OF MAKING WATER BASED PAINT AND FORMED GLAZING WITH PAINT THEREON

Premakaran Tucker Boaz, Livonia, Mich., assignor to Ford Motor Company, Dearborn, Mich.

Filed Dec. 20, 1996, Ser. No. 771,626

Int. Cl.^{6} B28B *7/36*

U.S. Cl. 106—600 **16 Claims**

1. A method of preparing a water-based paint composition, which has excellent adhesion to glass, which method comprises the steps of:

(a) adding together components comprising:

(i) water-soluble sodium silicate forming 20 to 45 weight percent of said composition,

(ii) water forming 5 to 20 weight percent of said composition;

(iii) water-soluble base in an amount sufficient to provide said composition with a pH of at least 10.5; and

(iv) finely divided metal oxide powder selected from the group consisting of oxides of copper, iron, nickel, cobalt and mixtures thereof forming 20 to 45 weight percent of said composition and having in the prepared paint composition a particle size less than 7 microns; thus forming a first part of the paint composition;

(b) adding into said first part of the paint composition, prior to using the paint composition:

(v) particles of soda-lime-silica glass forming 10 to 55 weight percent of the composition and having a diameter in the prepared paint composition, on average, less than 20 microns and having a melting point of at least about 1700° F.; and at least one material selected from the group consisting of:

(vi) low-melting glass frit powder melting below 1300° F. forming 0 to 10 weight percent of said composition and having a particle size in the prepared paint composition, on average, less than 10 microns; and

(vii) zinc oxide forming 0 to 10 weight percent of said composition; and

(c) ball milling all of said components together to form said paint composition.

5,702,521
AIR-ENTRAINED CONCRETE WITH LIGNIN-CONTAINING AIR-ENTRAINING AGENT
Richard Robert Suchanec, Newark, Del., assignor to Hercules Incorporated, Wilmington, Del.
Division of Ser. No. 483,620, Jun. 7, 1995, abandoned. This application Oct. 9, 1996, Ser. No. 728,026
Int. Cl.^{6} C08B *7/00;9/12;28/00;28/04*
U.S. Cl. 106—713 **18 Claims**

1. Air-entrained concrete containing an air-entraining agent comprising alkali metal salt of lignin and alkali metal salt of polymerized rosin.

5,702,522
METHOD OF OPERATING A GROWING HALL CONTAINING PULLER CELLS
Kazuo Sakauchi; Yoshihiro Hirano, and Akira Uchikawa, all of Vancouver, Wash., assignors to SEH America, Inc., Vancouver, Wash.
Division of Ser. No. 499,832, Jul. 10, 1995, Pat. No. 5,641,354. This application Sep. 5, 1996, Ser. No. 706,502
Int. Cl.^{6} F24F *3/26*
U.S. Cl. 117—2 **4 Claims**

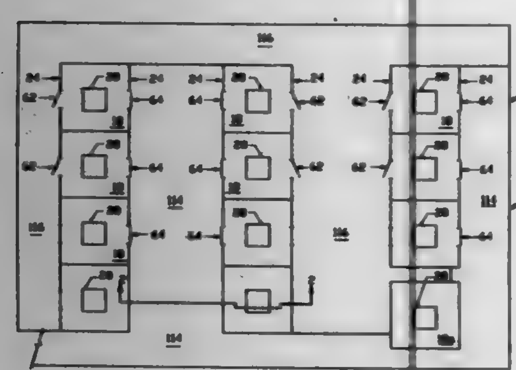

1. A method of operating a growing hall to reduce clean room costs and improve cleanliness, comprising:
dividing the growing hall with walls into at least one of a clean aisle, one of a maintenance aisle, and one of a crystal puller cell;
maintaining a different airborne particulate level in the clean aisle, maintenance aisle, and the crystal puller cell respectively.

5,702,523
ROTATING HEAD FOR CRYSTAL PULLING SYSTEMS
Winfried Schulmann, Kleinostheim; Franz Thimm, Alzenau, and Helmut Kaiser, Bruchköbel, all of Germany, assignors to Leybold Aktiengesellschaft, Hanau Am Main, Germany
Filed Aug. 31, 1994, Ser. No. 302,194
Claims priority, application Germany, Aug. 31, 1993, P 43 29 283.6
Int. Cl.^{6} C30B *35/00*
U.S. Cl. 117—208 **5 Claims**

1. A rotating head for a crystal pulling apparatus, said head comprising
a reference platform rotatable about a vertical axis, said platform having a feed-through opening concentric to said axis,
a shaft rotatable about a horizontal axis which is fixed relative to said platform, said shaft carrying a drum which is fixed against rotation relative to said shaft but movable axially

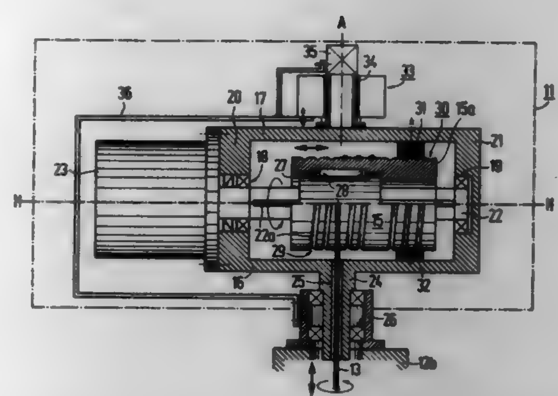

relative to said shaft, said drum having a helical winding groove for cable means wound on said drum and fed tangentially into said feed-through opening,
a helical guide groove concentric to said horizontal axis and rotatable with said shaft, said helical guide groove having the same pitch as said helical winding groove,
nut means comprising rotating balls engaging said guide groove to cause axial movement of said nut means relative to said guide groove, one of said guide groove and said nut means being fixed against axial movement relative to said horizontal axis, the other of said guide groove and said nut means being axially fixed relative to said drum, whereby,
said drum moves axially along said horizontal axis and said cable means is fed along said vertical axis as said shaft is rotated.

5,702,524
FLYWHEEL FOR COATING ROLLS
Douglas Scott Finnicum, Webster; Lawrence J. Finucane, Rochester; Jack Duane Peters, Rochester, and Son Minh Le, Rochester, all of N.Y., assignors to Eastman Kodak Company, Rochester, N.Y.
Continuation of Ser. No. 255,033, Jun. 7, 1994, abandoned, which is a continuation-in-part of Ser. No. 16,345, Feb. 11, 1993, abandoned. This application Mar. 25, 1996, Ser. No. 621,369
Int. Cl.^{6} F16F *15/10*
U.S. Cl. 118—200 **1 Claim**

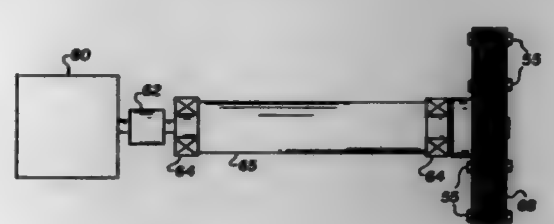

1. A coating roll assembly comprising:
a motor coupled to a coating roll for rotating the coating roll around an axis;
a flywheel for damping radial vibrations of the coating roll relative to the axis of rotation of said coating roll comprising;
a first planar plate element;
a second planar plate element;
planar layer of damping material;
fasteners to prevent torsional motion;
means for fixing said plate elements to said coating roll perpendicular to said axis of said coating roll and for preventing torsional movement between the coating roll, said plate elements, and said damping material around the rotating axis with said fasteners;

said planar layer of damping material captured between and contacting each of said planar plate elements wherein torsional movement between said first planar plate element, said second planar plate element and said planar layer of damping material is prevented by said fasteners;
whereby radial movement of said coating roll relative to the axis of rotation of said coating roll causes said plate elements to compress said layer of damping material to damp said vibrations by means of compression between said plate elements and said layer of damping material.

5,702,525
PAINT ROLLER DEVICE
Sam Foo Liou, 4 F, 57, Wuhwa Street, Chungli, Taoyuan Hsien, Taiwan
Filed Aug. 12, 1996, Ser. No. 695,894
Int. Cl.^{6} B05C *1/00*
U.S. Cl. 118—200 **5 Claims**

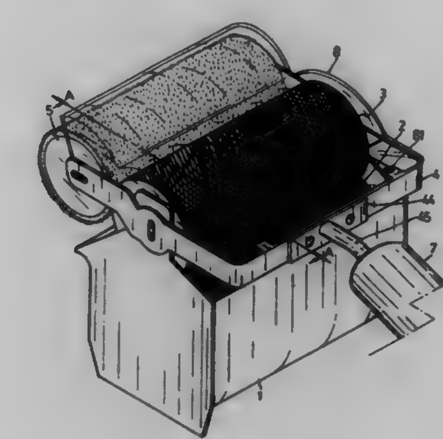

1. An improved paint roller device, comprising:
a hollow paint roller having a pivot pin at each end;
a trough body for holding paint material, said trough body having a front rim provided with an inwardly extending baffle plate, a bearing seat at each lateral side for receiving and positioning said paint roller such that said paint roller may freely rotate, and a pair of symmetrical lugs at an upper portion thereof at both ends, said lugs each having a pivot hole;
a uniform roller having pivot pins at each end;
an outer roller having an inner resilient foam layer and a surface layer with fibrous filaments, said outer roller having a pivot pin at each end; and
a substantially U-shaped frame with two side arms, each of said side arms having a projecting pivot extending inwardly with respect to the other side arm, said side arms being extendible so that said projecting pivots may fit into said pivot holes of said lugs of said trough body to join said frame to said trough body, said projecting pivots each having a longitudinal through hole for receiving said pivot pins of said uniform roller, said side arms each further having a transverse slot at a front end thereof for receiving said pivot pins of said outer roller,
whereby said uniform roller and said outer roller are connected with said frame and said trough body such that said uniform roller and said paint roller in said trough body and said outer roller are in contact and drive one another such that said outer roller causes said uniform roller and said paint roller to roll therewith so that said paint roller transfers said paint material to said uniform roller, said uniform roller then transfers said paint material to said outer roller for painting purposes.

5,702,526
APPARATUS FOR USE IN PRODUCING CATHODE RAY TUBE
Tsuneo Muchi; Yoji Kono, both of Kanagawa, and Kazuo Shimizu, Tokyo, all of Japan, assignors to Sony Corporation, Tokyo, Japan
Division of Ser. No. 408,573, Mar. 22, 1995. This application Mar. 7, 1996, Ser. No. 610,596
Claims priority, application Japan, Mar. 23, 1994, 6-051783
Int. Cl.^{6} B05C *1/00;5/00;3/00;* **B05B** *15/04*
U.S. Cl. 118—213 **6 Claims**

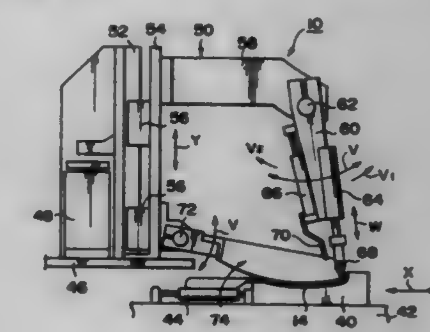

1. An apparatus for positioning and coating a curved panel comprising:
a slide table on which a curved panel is set so that its inner surface faces upward;
a screen frame having a curved bottom surface across which a screen-printing screen is stretched, and provided with a recess;
a screen frame setting means for setting said screen frame so that said screen of said screen frame is disposed at a predetermined clearance from the inner surface of the curved panel;
a squeegee; and
a squeegee movement means for causing the squeegee to be inserted in said recess and to move while pressing against said surface of said screen so that ink coated on said surface of said screen passes through said screen to print on said inner surface of said curved panel.

5,702,527
RESTRICTED FLOW DIE
Albert E. Seaver, Woodbury; Lyle N. Scheel; Luther E. Erickson, both of Stillwater, and Daniel R. Danielson, Lake St. Croix Beach, all of Minn., assignors to Minnesota Mining and Manufacturing Company, St. Paul, Minn.
Filed Feb. 22, 1995, Ser. No. 392,108
Int. Cl.^{6} B05D *1/04*
U.S. Cl. 118—410 **17 Claims**

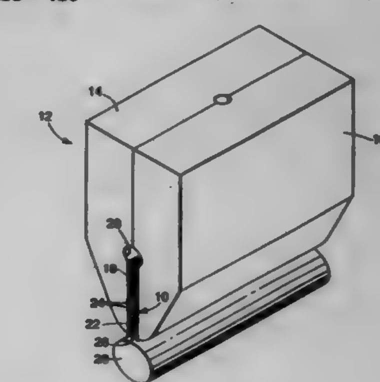

1. A coating device comprising:
a first half;
a second half located adjacent the first half to form a slot between the first and second halves, wherein the slot has a

length and extends to the ends of the coating device to form an exit having an exit area defined by a slot gap height and a slot width; and

means for creating a controlled predetermined pressure drop through the slot and for maintaining the pressure drop through the slot at a defined flow rate to create the defined flow rate along the slot width, wherein the creating and maintaining means comprises a porous material having an uncompressed thickness greater than the gap height of the slot, disposed in the slot to compress uniformly along its width to a thickness substantially equal to the gap height of the slot, and having a porosity and a length selected in combination with each other to create when compressed the controlled predetermined pressure drop.

5,702,528

PROCESS FOR COATING THE SURFACE OF ELONGATED MATERIALS

Vladimir A. Paramonov; Anatolij I. Tychinin; Anatolij I. Moroz, all of Moscow, Russian Federation; Boris L. Birger, Riga, Latvia; Klaus Frommann, Meerbusch, Germany; Werner Haupt, and Walter Ottersbach, both of Duisburg, Germany, assignors to Mannesmann Aktiengesellschaft, Düsseldorf, Germany; I.P. Bardin Central Research Institute of Iron and Steel Industry, Moscow, Russian Federation, and SKB MGD, Institute of Physics, Riga, U.S.S.R.

Continuation of Ser. No. 302,762, Nov. 15, 1994, abandoned.

This application Dec. 6, 1995, Ser. No. 567,877

Claims priority, application Germany, Mar. 13, 1992, 42 08 878.0

Int. Cl.[6] B05B *5/025*

U.S. Cl. 118—623 **10 Claims**

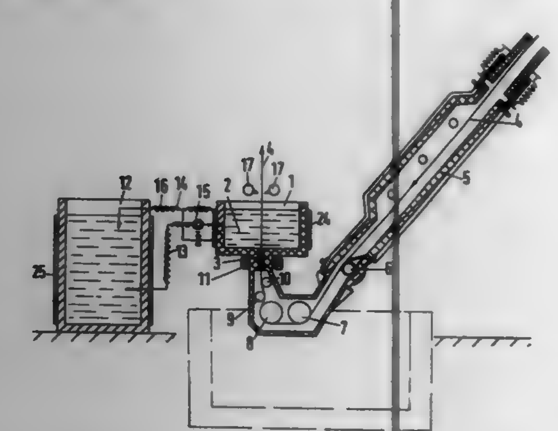

1. A device for coating the surface of an elongated material with a metallic coating, comprising:

(a) a coating tank containing a molten coating material bath, the coating tank being divided into an inner vessel having a base and an outer vessel provided so as to at least partially enclose the inner vessel, the outer vessel having walls that are higher than those of the inner vessel;

(b) a through-duct arranged at the base of the coating tank below the surface of the molten material;

(c) means for generating an electromagnetic force in a region where the through-duct opens into the molten material, said electromagnetic force being at least equal to the weight of the molten material and directed oppositely thereto and quantitatively proportional to the product of the cross-sectional area of the through-duct opening and the metallostatic pressure to prevent the molten material from flowing out the through-duct;

(d) a pre-melt tank associated with the coating tank and also containing a molten material bath, the coating tank enclosing a volume that is substantially smaller than a volume enclosed by the pre-melt tank; and

(e) means for connecting together the coating tank and the pre-melt tank and for adjusting the melt bath level in the coating tank by transferring the molten material back and forth between the tanks, the connecting means including duct means for separately connecting the outer vessel and the inner vessel to the pre-melt tank for passage of the molten coating material.

5,702,529

METHOD OF MAKING DOPED SEMICONDUCTOR FILM HAVING UNIFORM IMPURITY CONCENTRATION ON SEMICONDUCTOR SUBSTRATE AND APPARATUS FOR MAKING THE SAME

Yuuichi Mikata, Kawasaki; Katsunori Ishihara, and Katsuya Okumura, both of Yokohama, all of Japan, assignors to Kabushiki Kaisha Toshiba, Kawasaki, Japan

Division of Ser. No. 87,405, Jul. 8, 1993, abandoned, which is a division of Ser. No. 719,362, Jun. 24, 1991, Pat. No. 5,250,463. This application Jun. 6, 1995, Ser. No. 467,127

Claims priority, application Japan, Jun. 26, 1990, 2-167989

Int. Cl.[6] C23C *16/00*

U.S. Cl. 118—722 **4 Claims**

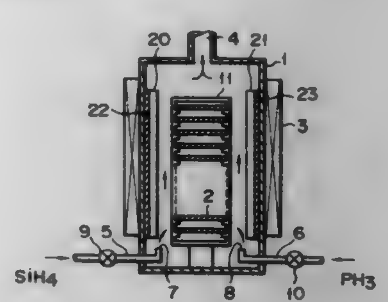

1. An apparatus for depositing a doped semiconductor film on a plurality of semiconductor substrates, comprising:

a reaction chamber kept at a reduced pressure, said reaction chamber including a heater for thermally decomposing a raw gas, means for decomposing an impurity gas, said semiconductor substrates being arranged at a constant pitch such that top surfaces of said semiconductor substrates face in a first direction and bottom surfaces of said semiconductor substrates face in an opposite direction;

a first pipe for introducing said raw gas into said reaction chamber;

a second pipe for introducing said impurity gas into said reaction chamber;

a first valve which is opened/closed and connected to a middle portion of said first pipe, said first valve being opened to permit said raw gas to be introduced into said reaction chamber, said first valve being closed to prevent said raw gas from being introduced into said reaction chamber;

a second valve which is opened/closed and connected to a middle portion of said second pipe, said second valve being opened to permit said impurity gas into said reaction chamber, said second valve being closed to prevent said impurity gas from being introduced into said reaction chamber; and

means for controlling opening/closing of said first and second valves, thereby repeating an operation for introducing said raw gas into said reaction chamber through said first pipe to deposit a semiconductor film on said semiconductor substrates, and then introducing only said impurity gas into said reaction chamber through said second pipe to add impurities to said semiconductor film.

5,702,530

DISTRIBUTED MICROWAVE PLASMA REACTOR FOR SEMICONDUCTOR PROCESSING

Hongching Shan, San Jose; Harald Herchen, Fremont, and Michael Welch, Pleasanton, all of Calif., assignors to Applied Materials, Inc., Santa Clara, Calif.

Filed Jun. 23, 1995, Ser. No. 494,297

Int. Cl.[6] C23C *16/00*

U.S. Cl. 118—723 MP **64 Claims**

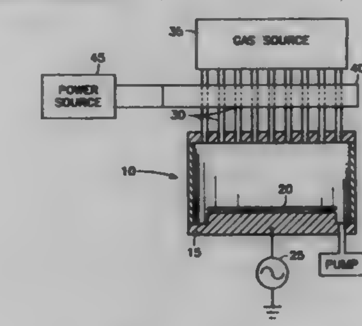

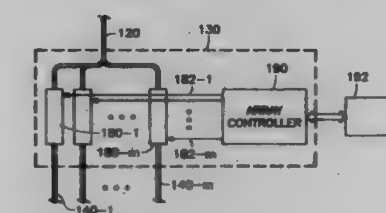

1. A plasma reactor, comprising:

a vacuum chamber and a wafer supporter for holding a semiconductor wafer in said chamber;

a reactant gas source for furnishing at least a reactant gas;

a radiation applicator outside said chamber; and

plural gas flow channels outside of said chamber, each having a hollow interior and plural respective individually adjustable valves, said channels extending from said reactant gas source and through a ceiling of said chamber, a portion of each one of said channels extending through said radiation applicator for irradiation of an interior of each of said channels whereby to generate a plasma therein which can be transported through said channels toward said chamber, said reactant gas source establishing gas flow rates in respective ones of said gas flow channels in accordance with adjustments of respective ones of said valves whereby said reactant gas flows through each of said channels toward said chamber.

5,702,531

APPARATUS FOR FORMING A THIN FILM

Yuuichi Mikata, Kawasaki, Japan, assignor to Kabushiki Kaisha Toshiba, Kawasaki, Japan

Division of Ser. No. 238,900, May 6, 1994. This application Jun. 6, 1995, Ser. No. 467,525

Claims priority, application Japan, May 10, 1993, 5-107899

Int. Cl.[6] C23C *16/00*

U.S. Cl. 118—697 **6 Claims**

1. An apparatus for forming a thin film, comprising:

a reactor for containing a tube inside of which a boat is placed;

a plurality of semiconductor substrates contained in the boat, said semiconductor substrates being arranged parallel to one another at regular intervals;

gas introducing means for introducing gases into the reactor;

heating means provided outside the reactor for heating the reactor;

cooling means for cooling the reactor; and

control means for controlling the gas introducing means, the cooling means, and the heating means;

wherein the gases are introduced into a space between the tube and the boat, and the cooling means has a nozzle tip beneath a space between the heating means and the reactor to provide

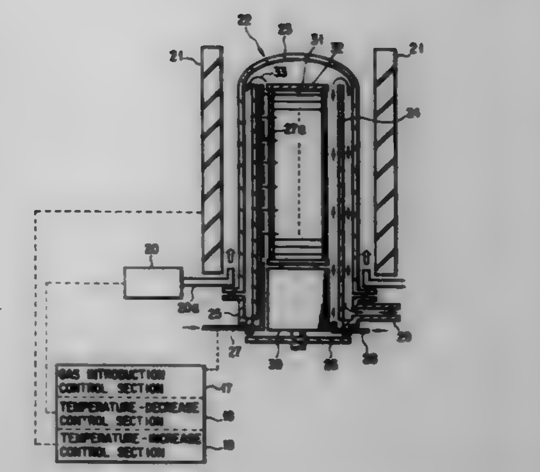

fan cooling air flow between the heating means and the reactor from bottom to top.

5,702,532

MOCVD REACTOR SYSTEM FOR INDIUM ANTIMONIDE EPITAXIAL MATERIAL

Cheng P. Wen, Mission Viejo; Randy K. Rolph, Palos Verdes Estates, and Timothy T. Zielinski, Torrance, all of Calif., assignors to Hughes Aircraft Company, Los Angeles, Calif.

Continuation of Ser. No. 455,941, May 31, 1995, abandoned.

This application Feb. 26, 1996, Ser. No. 606,660

Int. Cl.[6] C23C *16/00*

U.S. Cl. 118—730 **6 Claims**

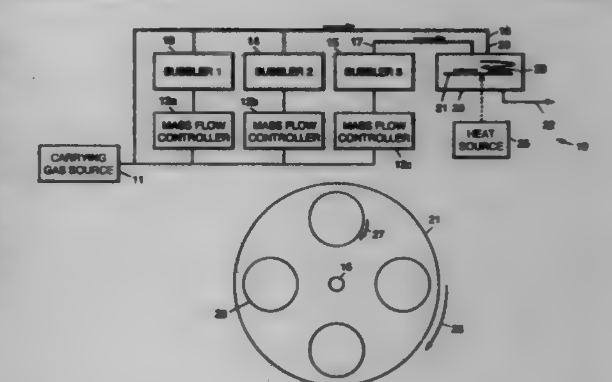

1. A metal organic chemical vapor deposition reactor system for depositing epitaxial material layers on a plurality of wafers, said system consisting of:

(a) a carrying gas source for providing carrying gas;

(b) a plurality of mass flow controllers coupled to the carrying gas source;

(c) a first bubbler for a first solid precursor, coupled to a first of the plurality of mass flow controllers wherein the first solid precursor provides a first reactant;

(d) a second bubbler for a second solid precursor, coupled to a second of the plurality of mass flow controllers wherein the second solid precursor provides a second reactant;

(e) a third bubbler for a third solid precursor, coupled to a third of the plurality of mass flow controllers wherein the third solid precursor provides a third reactant;

(f) a first manifold having a first input coupled to the carrying gas source and second and third inputs coupled to outputs of the first and second bubblers respectively;

(g) a second manifold having a first input coupled to the carrying gas source and a second input coupled to an output of the third bubbler;

(h) a reactor chamber having a first input coupled to an output of the first manifold and a second input coupled to an output of

the second manifold wherein a mixture of the first and second reactants enters the reactor chamber through the first input thereof and the third reactant enters the reactor chamber through the second input thereof;
(i) a rotatable susceptor disposed within the reactor chamber for supporting said wafers and rotating said wafers about the axis of said susceptor; and
(j) means for rotating each wafer of said plurality of wafers about the center of each said wafer.

5,702,533
PARTICULATE FREE VACUUM COMPATIBLE PINCH SEAL
Randall S. Mundt, Pleasanton, and Kenneth R. Krieg, Fremont, both of Calif., assignors to Lam Research Corporation, Fremont, Calif.
Filed Jun. 28, 1996, Ser. No. 672,317
Int. Cl.[6] C23C *16/00*
U.S. Cl. 118—733 **19 Claims**

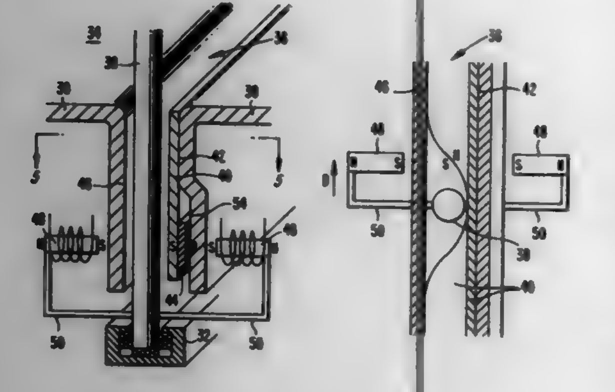

1. A semiconductor processing device comprising:
a transport device which transports a substrate within a work environment, the transport device including a transport mechanism and a substrate supporting member attached to the transport mechanism;
a barrier separating the work environment from the transport mechanism of the transport device, the barrier having an elongated opening through which the substrate supporting member extends;
a flexible seal sealing the elongated opening in the barrier while allowing the substrate supporting member to move along the elongated opening, the flexible seal being effective to minimize particles from passing through the opening into the work environment; and
an opening device which opens the flexible seal, the opening device preventing contact between the flexible seal and the substrate supporting member while the substrate supporting member moves along the opening.

5,702,534
HYDROGEN PEROXIDE PICKLING OF STAINLESS STEEL
Ronald D. Rodabaugh, Lebanon, and Jerald W. Leeker, Trenton, both of Ohio, assignors to Armco Inc., Middletown, Ohio
Filed May 24, 1996, Ser. No. 667,498
Int. Cl.[6] B08B *1/02;3/08;* **C23G** *1/02*
U.S. Cl. 134—7 **20 Claims**

1. A process for removing scale from a ferrous alloy containing chromium, comprising:

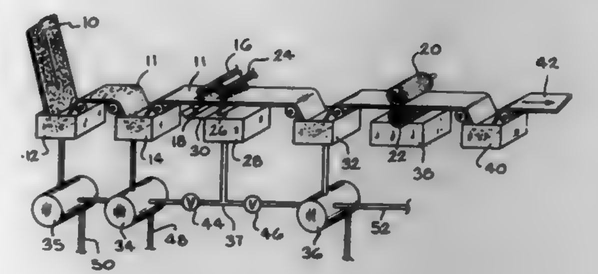

providing a ferrous alloy strip containing chromium covered by scale,
pretreating the strip to crack the scale,
immersing the strip into a first tank containing a first pickling acid to remove the cracked scale thereby forming a pickled strip,
applying an aqueous solution free of dissolved iron and containing hydrogen peroxide to the pickled strip wherein any remaining scale on the pickled strip becomes activated by the peroxide,
immersing the activated strip into a second tank containing a second acid to remove any residual scale thereby forming a clean strip.

5,702,535
DRY CLEANING AND DEGREASING SYSTEM
Donald J. Gray, East Greenwich, and Peter T. E. Gebhard, III, Providence, both of R.I., assignors to Gebhard-Gray Associates, Providence, R.I.
Continuation-in-part of Ser. No. 281,303, Jul. 27, 1994, Pat. No. 5,538,025, which is a continuation-in-part of Ser. No. 53,161, Apr. 26, 1993, Pat. No. 5,469,876, which is a division of Ser. No. 787,935, Nov. 5, 1991, Pat. No. 5,240,507. This application Jun. 6, 1995, Ser. No. 466,108
Int. Cl.[6] B08B *3/02;3/10;5/04*
U.S. Cl. 134—10 **24 Claims**

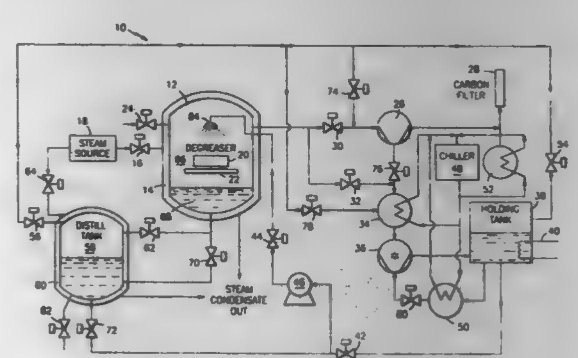

1. A method for cleaning an object, comprising:
placing the object in a sealed chamber;
applying a negative gauge pressure to the chamber by removing substantially all air from the chamber;
introducing a solvent into the chamber after applying the negative gauge pressure;
cleaning the object while maintaining the negative gauge pressure within the chamber;
recovering the solvent from the object in the chamber while maintaining the negative gauge pressure within the chamber; and
processing and cleaning contaminated solvent within a closed circuit that includes the chamber, whereby the solvent is recovered with a minimum of expense and effort since the solvent is not mixed with air.

5,702,536
METHOD OF CLEANING A PATIENT SUPPORT DEVICE FOR CARE, MAINTENANCE, AND TREATMENT OF THE PATIENT
W. Layne Carruth, Cordova, Tenn., assignor to Hill Rom Company, Inc., Charleston, S.C.
Continuation of Ser. No. 371,410, Jan. 11, 1995, abandoned, which is a division of Ser. No. 144,747, Oct. 27, 1993, Pat. No. 5,419,347, which is a continuation-in-part of Ser. No. 976,354, Nov. 16, 1992, abandoned. This application Mar. 7, 1996, Ser. No. 612,075
Int. Cl.[6] B08B *3/02;3/10;5/04;9/00*
U.S. Cl. 134—10 **15 Claims**

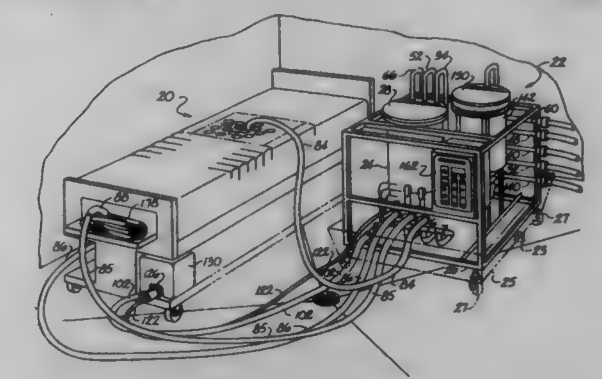

1. A method of cleansing a patient support device for care, maintenance, and treatment of a patient, the device having at least one external surface dedicated to supporting the patient thereon, the device further having one or more of internal hoses, valves, tanks, conduits, fittings, with internal surfaces that become exposed to contact with substances associated with the care, maintenance, and treatment of a patient, the method comprising the steps of:
using a first predetermined volume of liquid to flush preselected ones of the internal surfaces of the device exposed to substances associated with the care, maintenance, and treatment of a patient;
thereafter circulating over preselected ones of said internal surfaces of the device for a preselected period of time, a turbulent flow of a second volume of liquid including a chemical solution; and
thereafter using a third predetermined volume of liquid to rinse preselected ones of said internal surfaces of the device.

5,702,537
METHOD FOR REMOVING LIQUID EDGE BEAD
Donald C. Kush, Pleasanton, Calif., assignor to Kaiser Aluminum & Chemical Corporation, Pleasanton, Calif.
Continuation of Ser. No. 351,959, Dec. 8, 1994, abandoned, which is a division of Ser. No. 143,231, Oct. 29, 1993, Pat. No. 5,398,372. This application Dec. 22, 1995, Ser. No. 575,803
Int. Cl.[6] B08B *5/02*
U.S. Cl. 134—15 **7 Claims**

1. A method for removing liquid edge bead from the side marginal edges of a moving web which comprises:
(a) providing a moving web having a top surface, a bottom surface, and two side marginal edges, the;
(b) providing two or more pairs of manifolds, one pair of manifolds being arranged at one side marginal edge of the web, while the other pair of manifolds being arranged on the other side marginal edge of the web in an opposing relationship, each pair of manifolds consisting of a top and a bottom manifold, the top manifold being positioned above the surface of the moving web, while the bottom manifold being positioned below the surface of the moving web, the manifolds being capable of discharging a gas curtain onto the top and bottom surfaces of the moving web, approximately normal to the plane of the web, in each pair of manifolds the top and bottom manifolds being arranged in a substantially parallel

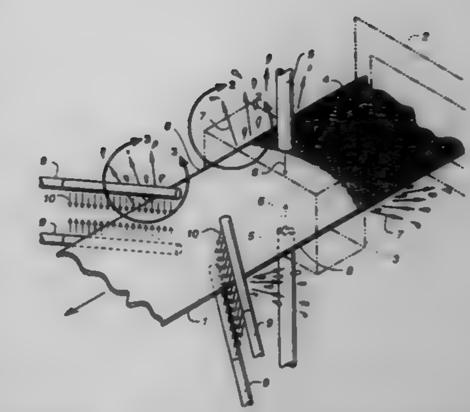

relationship and also located substantially equidistant from the top and bottom of the moving web, each pair of manifolds being positioned parallel to each other and to the top and bottom surfaces of the moving web and rotated to an angle from about 10° to about 80° relative to the side marginal edges of the moving web, the individual manifolds extending beyond the side edges of the moving web;
(c) introducing compressed gas to the manifolds to produce a gas curtain from each manifold approximately normal to the plane of the web, which curtains then impinge on the top and bottom surfaces of the moving web so that at least a portion of each gas curtain is deflected towards the side edges and the deflected gas curtains, in combination with the portion of gas curtains produced by those sections of the manifolds which extend beyond the side edges of the moving web, collide with each other and create turbulence at the side marginal edges of the moving web;
(d) using the turbulence to dislocate and remove the liquid edge bead from the side marginal edges of the web; and
(e) recovering the moving web substantially free of the liquid edge bead.

5,702,538
SILICON SEMICONDUCTOR WAFER SOLAR CELL AND PROCESS FOR PRODUCING SAID WAFER
Arthur Endrös, München, Germany, and Giuliano Martinelli, Ferrara, Italy, assignors to Siemens Solar GmbH, Munich, Germany
PCT No. PCT/DE94/01489, § 371 Date Jun. 14, 1996, § 102(e) Date Jun. 14, 1996, PCT Pub. No. WO95/17016, PCT Pub. Date Jun. 22, 1995
PCT Filed Dec. 14, 1994, Ser. No. 656,348
Claims priority, application Germany, Dec. 17, 1993, 43 43 296.4
Int. Cl.[6] H01L *31/04;31/0368;31/18*
U.S. Cl. 136—258 **11 Claims**

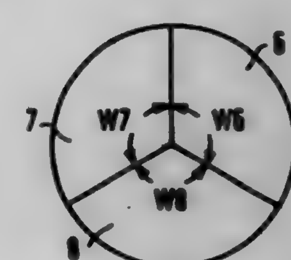

1. A solar cell comprising: a mechanically robust 60 μm to 90 μm thick silicon semiconductor wafer as a solar cell substrate, said wafer having a front side and a rear side, and said wafer having three mutually inclined monocrystalline regions which form three circular sectors whose interfaces and boundary lines extend radially with respect to one another and form angles of less than 180°

with one another, two of the interfaces being first-order twin grain boundaries between two <111> crystal planes in each case, the wafer being produced from crucible-drawn silicon;

a light p-doping in the wafer;

a shallow, n+-doped emitter 0.2 μm to 2 μm deep on the front side;

a first passivation layer on the front side, the first passivation layer being an oxide layer which produces a charge carrier recombination rate on the surface of said wafer of less than 1000 cm/s;

a second passivation layer or a back surface field on the rear side, the charge carrier recombination rate on the rear side being less than 100 cm/s; and

current-collecting contacts respectively on the front and rear sides.

5,702,539

METHOD FOR PRODUCING SILICON-CHROMIUM GRAIN ORIETED ELECTRICAL STEEL

Jerry W. Schoen, Middletown; Norris A. Dahlstrom, Hamilton, both of Ohio, and Christopher G. Klapheke, Gibsonia, Pa., assignors to Armco Inc., Middletown, Ohio

Filed Feb. 28, 1997, Ser. No. [illegible]8,894

Int. Cl.⁶ H01F *1/04*

U.S. Cl. 148—111 **20 Claims**

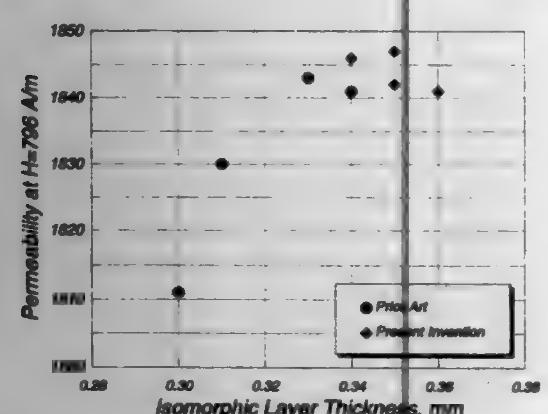

1. A method for producing a grain oriented electrical steel having superior magnetic properties, comprising the steps of:

providing a hot processed strip having an austenite volume fraction and an isomorphic layer on each surface of the strip,

the strip consisting essentially of 2.5–4.5% silicon, 0.1–1.2% chromium, less than 0.050% carbon, less than 0.005% aluminum, up to 0.1% sulfur, up to 0.14% selenium, 0.01–1% manganese and balance being essentially iron and residual elements,

the strip having a volume resistivity of at least 45 μΩ-cm, at least 0.010% carbon so that the austenite volume fraction is at least 2.5% and each isomorphic layer having a thickness of at least 10% of the total thickness of the hot processed strip,

cold rolling the strip to an intermediate thickness,

annealing the cold reduced strip,

cold rolling the annealed strip to a final thickness,

decarburize annealing the cold reduced strip to sufficiently to prevent magnetic aging,

coating at least one surface of the annealed strip with an annealing separator coating, and final annealing the coated strip to effect secondary grain growth and thereby provide a permeability measured at 796 A/m of at least 1780.

5,702,540

VACUUM CARBURIZING METHOD AND DEVICE, AND CARBURIZED PRODUCTS

Ken Kubota, Aichi-ken, Japan, assignor to JH Corporation, Japan

Filed Mar. 28, 1996, Ser. No. 623,129

Claims priority, application Japan, Mar. 29, 1995, 7-072043

Int. Cl.⁶ C21D *1/06;* **C23C** *8/22*

U.S. Cl. 148—223 **8 Claims**

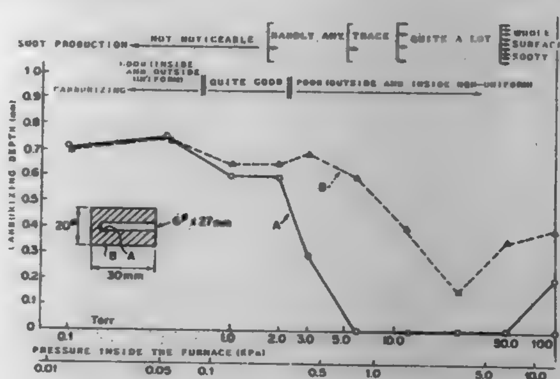

1. A vacuum carburizing method which is a vacuum carburizing method in which carburizing treatment is performed by vacuum heating workpieces from steel material in the heating chamber of a vacuum carburizing furnace, and supplying a carburizing gas to the heating chamber, comprising employing a gaseous unsaturated aliphatic hydrocarbon comprising an acetylenic gas as said carburizing gas, and performing said carburizing treatment with the heating chamber at a vacuum of not more than 1 kPa.

5,702,541

HIGH MAGNETIC DENSITY, LOW IRON LOSS, GRAIN ORIENTED ELECTROMAGNETIC STEEL SHEET AND A METHOD FOR MAKING

Yukio Inokuti, Chiba, Japan, assignor to Kawasaki Steel Corporation, Japan

Filed Dec. 5, 1995, Ser. No. 567,779

Claims priority, application Japan, Dec. 5, 1994, 6-300894; Jun. 28, 1995, 7-161958

Int. Cl.⁶ H01F *1/147*

U.S. Cl. 148—308 **5 Claims**

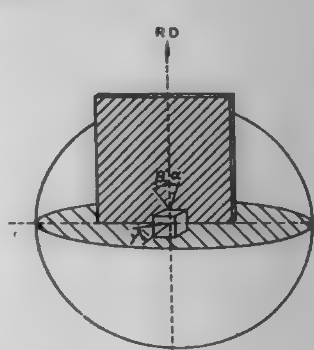

1. A grain oriented electromagnetic steel sheet exhibiting excellent magnetic flux density and excellent iron loss, said steel sheet having a rolling direction and a direction normal to said sheet, said steel sheet comprising:

about 2.5 to 4.0 weight percent of Si, and

about 0.005 to 0.06 weight percent of Al; said steel sheet further comprising:

i) large secondary recrystallized grains each having a diameter of about 5 to 50 mm and comprising at least about 95 percent by area ratio of all crystal grains in said electromagnetic steel sheet, said large secondary recrystallized grains defining grain boundaries, said large secondary recrystallized grains each having a [001] axis and a [110] axis, said [001] axis being within about 5° to said rolling direction of said steel sheet and said [110] axis being within about 5° to said direction normal to said sheet; and

ii) small grains each having a diameter of about 0.05 to 2 mm, said small grains each having a [001] axis which is at an angle of about 2° to 30° relative to said [001] axis of said large secondary recrystallized grains, said small grains being positioned in said large secondary recrystallized grains or at said grain boundaries defined by said large secondary recrystallized grains.

5,702,542

MACHINABLE METAL-MATRIX COMPOSITE

Alexander M. Brown, 724 Ambleside Dr., Wilmington, Del. 19808, and Eric M. Klier, 5923 Charnwood Rd., Catonsville, Md. 21228

Division of Ser. No. 262,075, Jun. 16, 1994, Pat. No. 5,511,603, which is a continuation of Ser. No. 38,129, Mar. 26, 1993, abandoned. This application Dec. 18, 1995, Ser. No. 574,039

Int. Cl.⁶ C22C *21/00;23/00;29/00;38/00*

U.S. Cl. 148—406 **15 Claims**

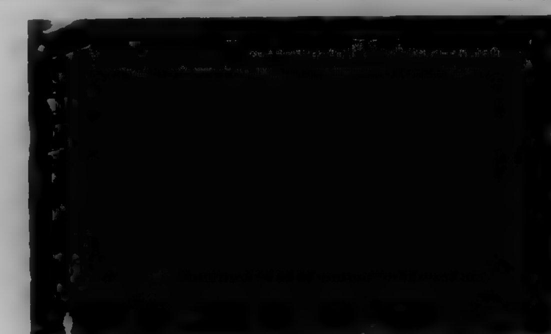

1. A metal-matrix composite comprising a uniform distribution of calcined ceramic particles having an average particle size no greater than about 1 micron and a metal or alloy substantially uniformly distributed with said ceramic particles, in which said ceramic particles comprise at least 15 volume % of the metal-matrix and said metal-matrix composite being machineable with a high-speed steel (HSS) bit for greater than about 1 minute without excessive wear to said bit.

5,702,543

THERMOMECHANICAL PROCESSING OF METALLIC MATERIALS

Gino Palumbo, 9 Tyler Pl., Etobicoke, Canada, M9R 1L8

Continuation-in-part of Ser. No. 994,346, Dec. 21, 1992, abandoned. This application Dec. 16, 1993, Ser. No. 167,188

Int. Cl.⁶ C21D *9/08*

U.S. Cl. 148—592 **10 Claims**

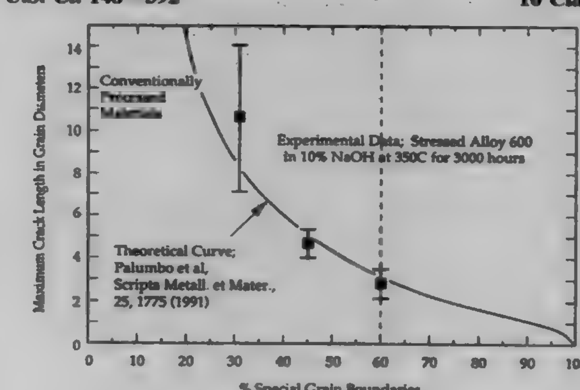

1. In the fabrication of articles from an austenitic stainless, iron-based or nickel-based face-centered cubic alloy wherein the alloy is subjected to cold working and annealing steps which are effective to produce recrystallization, the improvement which comprises selecting the number of said cold working and annealing steps so that said alloy is subjected to at least three cold working and annealing cycles to produce a special grain boundary fraction of at least 60%; each said cycle consisting of

i) a cold working step in which the alloy is subjected to a forming reduction of up to 30%, and

ii) an annealing step in which the alloy obtained from the cold working step is annealed at a temperature in the range of 900°–1050° C. for a time of 2–10 minutes.

5,702,544

ZIRCONIUM-BASED ALLOY TUBE FOR A NUCLEAR REACTOR FUEL ASSEMBLY AND A PROCESS FOR PRODUCING SUCH A TUBE

Jean-Paul Mardon, Caluire; Jean Sevenat, Saint-Brevein-les-Pins, and Daniel Charquet, Ugine Cédex, all of France, assignors to Framatome, and Compagnie Generale Des Matieres Nucléaires, both of France

Filed Jan. 30, 1996, Ser. No. 593,869

Claims priority, application France, Jan. 30, 1995, 95 01026

Int. Cl.⁶ C22F *1/18*

U.S. Cl. 148—672 **7 Claims**

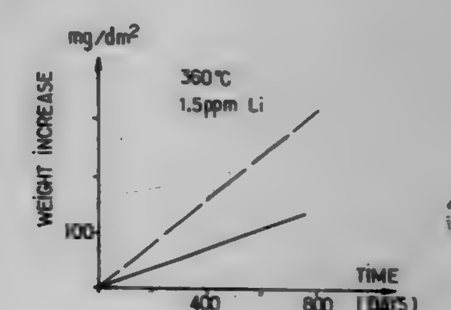

1. A method for the production of a zirconium-based alloy tube constituting at least part of cladding or guide tube for a nuclear fuel assembly, said alloy containing, by weight, 0.4% to 0.6% of tin, 0.5% to 0.8% of iron, 0.35% to 0.75% of vanadium, 0.10% to 0.18% of oxygen, 100 ppm to 180 ppm carbon and 50 ppm to 120 ppm silicon, the balance being zirconium and unavoidable impurities, said method comprising the steps of:

(a) casting an ingot of said alloy;

(b) forging said ingot into a solid bar;

(c) heating said bar and quenching the heating bar into β phase;

(d) piercing said bar into a hollow billet and drawing said billet into a tubular blank;

(e) carrying out a plurality of successive cold rolling steps of said tubular blank to form successive tubes of decreasing thicknesses, with intermediate heat treatments between said cold rolling steps in an inert atmosphere or in a vacuum at a temperature in a range of 640° C. to 760° C.; and

(f) finally, recrystallizing the tube resulting from step (e) in an inert atmosphere or under vacuum at a temperature in the range of 550° C. to 650° C.;

(g) steps (a) to (f) as a whole being such that a heat treatment parameter ΣA is in the range 10^{-18} to 10^{-16}.

5,702,545

PNEUMATIC RADIAL TIRE HAVING ASYMMETRIC TREAD PATTERN

Takayuki Toyoshima, and Eiichi Iida, both of Hiratsuka, Japan, assignors to The Yokohama Rubber Co., Ltd., Tokyo, Japan

Continuation of Ser. No. 356,537, Dec. 15, 1994, abandoned. This application Sep. 30, 1996, Ser. No. 722,665

Claims priority, application Japan, Dec. 27, 1993, 5-333442

Int. Cl.[6] B60C *11/00*

U.S. Cl. 152—209 A **8 Claims**

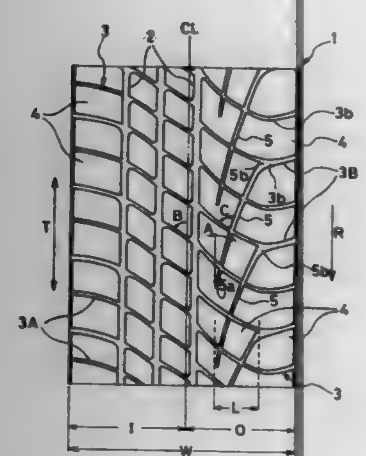

1. A pneumatic radial tire designed to rotate in one rotating direction comprising a tread having a tread surface and including a large number of first sub-grooves continuously extending in a tire width-wise direction from near a tire center line to a first side of the tire, said first sub-grooves being convexly curved relative to the one rotating direction, only two main grooves extending straight in the tire circumferential direction in a first region of the tread surface defined between the tire center line and a second side of the tire opposite said first side, only one main groove disposed in the vicinity of the tire center line in a second region of the tread surface defined extending axially outwardly of the tire center line relative to the first region, a large number of second sub-grooves extending from said only one main groove continuously in a tire width-wise direction to said second side at an acute angle B to a tire circumferential direction, said second sub-grooves being concavely curved relative to the one rotating direction, and semi-main grooves inclining in the tire circumferential direction in an opposite direction to that of said second sub-grooves only in said second region of the tread surface at a predetermined pitch, so as to form a block tread pattern having asymmetric directionality, each semi-main groove having a leading end in the one rotating direction terminating in a central portion of one block of the tread, each semi-main groove being curved at a large curvature, each semi-main groove crossing three of said first sub-grooves, each semi-main groove having a trailing end in the one rotating direction terminating in a fourth one of said first sub-grooves at an apex, said semi-main grooves terminating in alternating first sub-grooves, an inclination angle A of said semi-main grooves to the tire circumferential direction on an acute angle side being from about 5° to about 32°, each of said first sub-grooves having a portion closest to said first side being inclined at a sub-groove angle in a same direction as said inclination angle A, said portion of said first sub-groove having a width wider than a width of the remainder of said first sub-groove, and a groove width of each of said semi-main grooves being the largest at said trailing end.

5,702,546

PNEUMATIC TIRES HAVING A TREAD OF AN ORIENTED RUBBER

Kenji Itoh, and Toru Sato, both of Kodaira, Japan, assignors to Bridgestone Corporation, Tokyo, Japan

Filed Nov. 8, 1995, Ser. No. 555,326

Claims priority, application Japan, Nov. 8, 1994, 6-273227; Dec. 26, 1994, 6-322933

Int. Cl.[6] B60C *11/01*

U.S. Cl. 152—209 R **7 Claims**

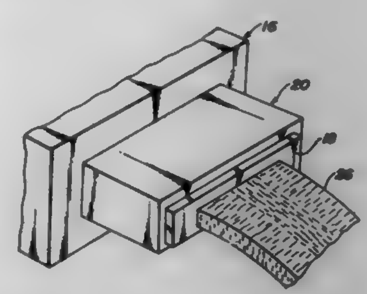

1. In a pneumatic tire comprising; a tread made from an oriented rubber sheet having a modulus ratio of 300% tensile modulus in a circumferential direction of the tire to a 300% tensile modulus in a widthwise direction of the tire in a central region of the tread which is larger by at least +0.1 times than corresponding modulus ratios in each side region of the tread, and the modulus ratio is 1.1–1.5 in the central region of the tread and 0.9–1.2 in the side region of the tread, and the rubber sheet is made by a process of extruding rubber by an extruder having an extrusion head including orientation controlling flow-paths consisting of a squeezing path to orient the rubber in said central region of said rubber sheet in the circumferential direction of the tire and spreading paths located on both sides of the squeezing path to orient the rubber in each side region in the widthwise direction of the tire.

5,702,547

ARTICLE REINFORCED BY ARAMID MONOFILAMENT HAVING A SLIGHTLY STRUCTURED SKIN

Jean-Paul Meraldi, Zurich; Joel Ribiere, Wallisellen, and Jean-Jacques Almon, Dübendorf, all of Switzerland, assignors to Michelin Recherche et Technique, S.A., Clermont-Ferrand Cedex, France

Division of Ser. No. 293,117, Aug. 19, 1994, Pat. No. 5,582,911, which is a continuation of Ser. No. 923,916, Aug. 26, 1992, abandoned. This application Jun. 5, 1995, Ser. No. 465,323

Claims priority, application France, Dec. 27, 1990, 90/16 595

Int. Cl.[6] B60C *9/00;* **D02G** *3/02;3/04;3/48*

U.S. Cl. 152—451 **5 Claims**

1. An assemblage of monofilaments comprising at least one aramid monofilament, said aramid monofilament having a slightly structured skin and satisfying the following relationships:

$1.7 \leqq Ti \leqq 260;$

$40 \leqq D \leqq 480;$

$T \geqq 180 - D/3;$

$Mi \geqq 1600;$

$Ar > 2.00;$

$Er > 20.0 - D/30;$

Ti being the titer in tex, D being the diameter in μm (micrometer), T being the tenacity in cN/tex, Mi being the initial modulus in

cN/tex, Ar being the elongation upon rupture in %, Er being the energy upon rupture per unit of mass in J/g in the case of this monofilament.

2. An article reinforced by at least one aramid monofilament, said aramid monofilament having a slightly structured skin and satisfying the following relationships:

$1.7 \leqq Ti \leqq 260;$

$40 \leqq D \leqq 480;$

$T \geqq 180 - D/3;$

$Mi \geqq 1600;$

$Ar > 2.00;$

$Er > 20.0 - D/30;$

Ti being the titer in tex, D being the diameter in μm (micrometer), T being the tenacity in cN/tex, Mi being the initial modulus in cN/tex, Ar being the elongation upon rupture in %, Er being the energy upon rupture per unit of mass in J/g in the case of this monofilament.

3. An article according to claim 2, characterized by the fact that it is an automobile tire.

5,702,548

TIRE HAVING CIRCUMFERENTIAL CABLES FOR ANCHORING THE CARCASS

Jean-Claude Arnaud, Durtol, and Pedro Costa Pereira, Clermont-Ferrand, both of France, assignors to Sedepro, Paris, France

Filed Jun. 28, 1996, Ser. No. 673,072

Claims priority, application France, Jun. 29, 1995, 95 07977

Int. Cl.[6] B60C *1/00;15/00*

U.S. Cl. 152—547 **7 Claims**

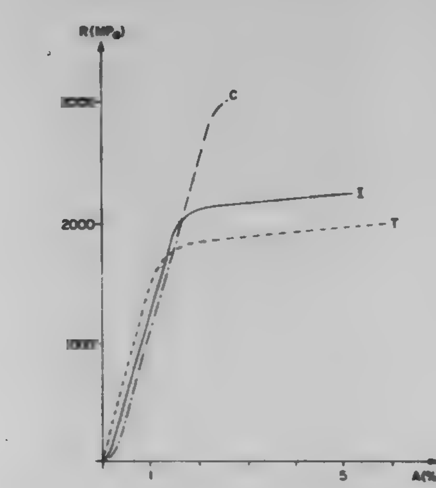

1. A tire comprising sidewalls which terminate in beads, the beads being designed to be mounted on a rim, said tire comprising a carcass reinforcement which passes into the sidewalls and joins the beads, at least one of said beads comprising:

carcass reinforcing elements extending from the radially lower part of the bead towards the sidewall;

at least one pile of circumferential cables or cable windings laterally bordering the carcass reinforcing elements, each said circumferential cable having an operational elongation rate $A_f = A_e + A_p$ of more than 4%, A_e bring elastic elongation and A_p being plastic elongation, and

a connecting rubber mix between the circumferential cables and the carcass reinforcing elements, whereby the at least one pile of circumferential cables or cable windings anchors the carcass reinforcement in the bead.

5,702,549

TIRE INCLUDING TIRE FABRIC AND PLY INCLUDING TIRE FABRIC

Masato Komatsuki, Takasago; Makoto Ishii, Toyota; Yukishige Adachi, Toyota; Keiichi Makino, Toyota, and Shinichi Miyazaki, Kobe, all of Japan, assignors to Sumitomo Rubber Industries, Ltd., Hyogo, Japan

Filed Nov. 29, 1994, Ser. No. 350,015

Claims priority, application Japan, Nov. 30, 1993, 5-299520

Int. Cl.[6] B60C *9/11*

U.S. Cl. 152—548 **4 Claims**

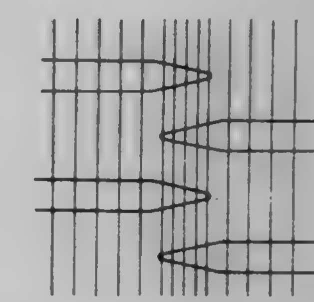

1. A tire containing a plurality of tire-reinforcing fabrics overlapping each other, each said fabric comprising warps, said warps extending in the axial direction of the tire, each of said warps having straight portions arranged in parallel with each other at predetermined intervals, and a weft woven zigzag with said warps,

the weft comprising first, second and third parallel portions arranged adjacently and first and second connecting portions,

the first connecting portion extending straightly from one end of the first parallel portion, inflecting at one of the straight portions of the warps which is disposed in one edge portion of the tire fabric, and then extending straightly toward one end of the second parallel portion, and terminating at one end of the second parallel portion, such that the first connecting portion is V-shaped and the straight portions of the warps which are disposed at the first connecting portion are prevented from moving at the first connecting portion,

the second connecting portion extending straightly from the other end of the second parallel portion, inflecting at one of the straight portions of the warps which is disposed in another portion of the tire fabric and then extending straightly toward one end of the third parallel portion, and terminating at the one end of the third parallel portion, such that the second connecting portion is V-shaped and the straight portions of the warps which are disposed at the second connecting portion are prevented from moving at the second connecting portion,

said first, second and third parallel portions and the V-shaped connecting portions being integrally formed, wherein

the number of the parallel portions of the weft provided for every 5 cm-length in an extended direction of the straight portion of the warp defines P, the shortest length in mm from a connection point where the end of each of said first, second and third parallel portions is connected to the connecting portion, to an inflection point of the connecting portion defines L, and a value of P×L is in a range from 100 to 700.

5,702,550

PROCESS FOR TIRE MANUFACTURE WITH ON-LINE DETERMINING OF CARBON BLACK CONCENTRATION AND DISTRIBUTION IN RUBBER COMPOUNDS AND OTHER CARBON BLACK CONTAINING MATERIALS

Christoph Carlhoff, Willich; Martin Jogwich; Claus-Jürgen Lorenzen, both of Essen, all of Germany, and Marco Nahmias, Milan, Italy, assignors to Pirelli Coordinamento Pneumatici S.p.A., Milan, Italy

Division of Ser. No. 288,254, Aug. 11, 1994, Pat. No. 5,537,207. This application Mar. 21, 1996, Ser. No. 619,411
Claims priority, application European Pat. Off., Aug. 13, 1993, 93113036.3
Int. Cl.[6] B29D *30/00*
U.S. Cl. 156—64 **3 Claims**

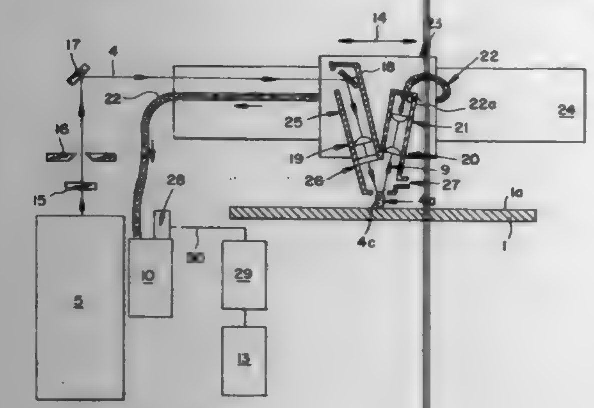

1. Process for manufacturing pneumatic tire for vehicle wheels, comprising the steps of:
preparing at least one rubber compound by mixing together at least one polymeric material with other ingredients, including carbon black, according to prefixed quantitative ratios between said ingredients established in a given recipe;
forming from said rubber compound at least one semi-finished component for said tire;
assembling together a plurality of said semi-finished components to build up a raw carcass to be molded and vulcanized in a curing mold, wherein this process further comprises the steps of:
quantitatively detecting, on-line, the quantity of carbon black contained in said at least one rubber compound to thereby monitor in real time a dispersion degree and a homogeneity of the carbon black in said rubber compound, by taking respective first and second measurements:
wherein each of the first and second measurements is made by directing a laser of a laser apparatus at the rubber compound to thereby produce a plasma, detecting radiation from the plasma, producing a spectrum from the radiation, measuring intensities of spectral lines of the spectrum;
and wherein, in said first measurement, said measuring of said intensities of said spectral lines is carried out at a first time delay from actuation of the laser apparatus for causing the plasma whose radiation is measured in the first measurement, and in said first measurement, the intensities of spectral lines of carbon and at least approximately all other analysis constituents of the rubber compound forming the spectrum are measured; and in said second measurement, the measuring of said intensities of said spectral lines is carried out at a second time delay from actuation of the laser apparatus for causing the plasma whose radiation is being measured in the second measurement, with the first and second time delays for the first and second measurements being substantially different from one another and, in the second measurement, the spectral lines of carbon and at least one of the other analysis constituents is measured;
determining the quantity of carbon black in said at least one rubber compound using the intensities measured in the first and second measurements, in conjunction with stored values of intensities of known rubber compound samples;
controlling the quantity of carbon black which is being mixed into said polymeric material during said mixing step, by using said on-line detection of carbon black to achieve the prefixed quantitative ratios of ingredients.

5,702,551

METHOD FOR ASSEMBLING A MULTI-PIECE ABSORBENT ARTICLE

Michael T. Huber; David W. Cabell, both of Cincinnati; Robert J. Jezek, Sr., Fairfield, and David J. K. Goulait, Cincinnati, all of Ohio, assignors to The Procter & Gamble Company, Cincinnati, Ohio

Filed Apr. 3, 1996, Ser. No. 627,866
Int. Cl.[6] B32B *31/08*
U.S. Cl. 156—73.1 **22 Claims**

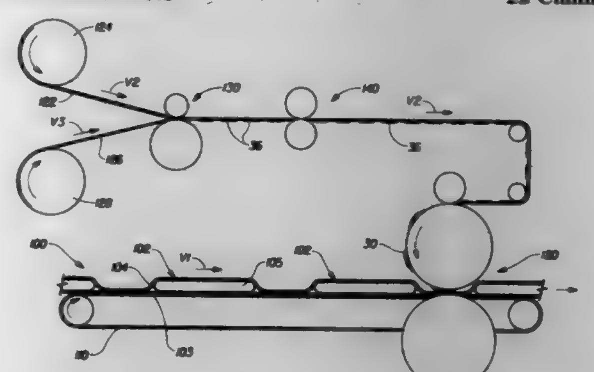

1. A method for assembling a multi-piece absorbent article, said method comprising the steps of:
(a) feeding a chassis to a first assembly station at a first velocity, V1, said chassis comprising a topsheet, a backsheet joined to said topsheet, and an absorbent core positioned between said topsheet and said backsheet;
(b) feeding an ear web to a second assembly station at a second velocity, V2, said second velocity, V2, being less than said first velocity, V1;
(c) feeding a securement member substrate to said second assembly station at a third velocity, V3, said third velocity, V3, being less than said second velocity, V2;
(d) cutting said securement member substrate into individual securement members;
(e) bonding said individual securement members to said ear web at said second assembly station;
(f) cutting said ear web into individual ear pieces; and
(g) bonding said individual ear pieces to said chassis at said first assembly station to form a multi-piece absorbent article.

5,702,552

METHOD FOR MAKING A PLEATED EXPANDABLE CELLULAR PRODUCT FOR WINDOW COVERINGS

Darrell J. Kutchmarek, Waunakee, and James H. Stauffacher, Middleton, both of Wis., assignors to Springs Window Fashions Division, Inc., Middleton, Wis.

Continuation-in-part of Ser. No. 502,575, Mar. 30, 1990, Pat. No. 5,160,563, which is a continuation-in-part of Ser. No. 417,725, Oct. 5, 1989, abandoned. This application Sep. 4, 1990, Ser. No. 577,680
Int. Cl.[6] B32B *3/12;31/12*
U.S. Cl. 156—197 **12 Claims**

1. A process for the manufacture of pleated cellular shade product for the use in a shade and having different physical characteristics at first and second sides of the shade product comprising:
(a) providing an elongated web having alternate first and second stripe areas extending crosswise of the web at a preselected repeat distance, the first and second stripe areas having different physical characteristics and each having a width approximately one-half of the repeat distance,
(b) accordion folding the web in an accordion folding apparatus along first and second fold lines extending crosswise of the web and spaced apart a distance substantially one-half the repeat distance to form a stack of panels disposed in sidewise abutting relation and serially united along respective first and second fold lines;
(c) controlling advance of the web to the accordion folding apparatus to maintain the first fold lines approximately medially between side edges of the first stripe areas and to maintain the second fold lines approximately medially between side edges of the second stripe areas, the step of controlling advance of the web to the folding apparatus including maintaining tension on the web as it is advanced to the folding apparatus and adjusting the web tension to increase or decrease lengthwise stretching of the web;
(d) joining faces of sidewise adjacent panels that are united along the first fold lines in a first band parallel to and spaced from the associated first fold line a distance greater than one-half the fold spacing and within the second stripe areas such that only portions of the second stripe areas are exposed to view at the second side of the shade product, and joining faces of sidewise adjacent panels that are united along the second fold lines in a second band parallel to and spaced from the associated second fold line a distance greater than one-half the fold spacing and within the first stripe areas such that only portions of the first stripe areas are exposed to view at the first side of the shade product.

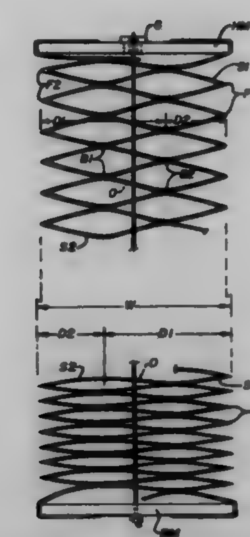

5,702,553

METHOD OF FORMING A PAPERBOARD TAMPON APPLICATOR HAVING AN OUTWARDLY ROLLED GRIPPER END

Michael J. Iskra, Bridgewater, and Martin Wislinski, Edison, both of N.J., assignors to McNeil-PPC, Inc., Milltown, N.J.

Continuation of Ser. No. 366,536, Dec. 30, 1994, abandoned. This application Nov. 1, 1996, Ser. No. 742,332
Int. Cl.[6] B29C *53/56;57/04*
U.S. Cl. 156—203 **12 Claims**

1. A method of forming an outwardly rolled edge on a gripper end of a paperboard tampon applicator tube, the method comprising the steps of:
applying moisture to the gripper end of the paperboard tube having a diameter of less than about 25 mm;
heating a forming tool to about 100° F. to about 350° F.;
rotating the paperboard tube with respect to the forming tool in order to provide at least one rotation of the tube during the formation of the outwardly rolled edge;
contacting the gripper end of the paperboard tube with the forming tool for about 0.2 to about 5 seconds to form the outwardly rolled edge; whereby the forming tool rolls the gripper end of the paperboard tube outwardly to form a radiused surface at the outside of the gripper end of the paperboard applicator tube.

5,702,554

PROCESS OF LAMINATING GOLD FOIL AND GOLD FOIL CARD

Edmond Mun Hang Lee, Unit 2606-7, 26/F., Honour Industrial Center, 6, Sun Yip Street, Chai-Wan, Hong Kong

Filed Jan. 4, 1996, Ser. No. 583,210
Int. Cl.[6] B32B *15/08;31/20;31/22*
U.S. Cl. 156—219 **4 Claims**

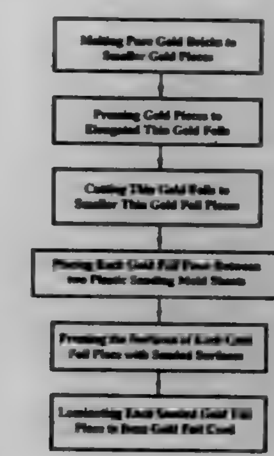

1. A process of laminating gold foil, comprising the following steps:
(a) pressing a gold piece to form an elongated thin gold foil having a thickness of 0.1 mm to 1 mm;
(b) cutting said elongated thin gold foil into a plurality of gold foil pieces of predetermined size;
(c) placing each of said gold foil pieces between a pair of plastic sanding mold sheets having a size larger than said gold foil piece, in which each of said two plastic sanding mold sheets has an interior sanded surface;
(d) pressing said two plastic sanding mold sheets onto the two surfaces of said gold foil piece respectively by pressing said two plastic sanding mold sheets toward each other, wherein said pair of plastic sanding mold sheets with said gold foil piece therebetween are placed between two plastic molds on a hydraulic press, and said two plastic molds coaxially are driven toward each other to press on said pair of plastic sanding mold sheets, the pressing force applied thereto presses said sanded interior surfaces evenly onto said two surfaces of said gold foil piece due to an elastic and flexible nature of said plastic sanding mold sheets to form two sanded surfaces respectively on said gold foil;
(e) removing said sanded gold foil piece from said pair of plastic sanding molding sheets and placing said sanded gold foil piece between two plastic laminating sheets having a size larger than said sanded gold foil piece;
(f) heating and pressing said two plastic laminating sheets with said sanded gold foil piece positioning therebetween simultaneously, wherein said sanded surfaces of said sanded gold foil piece are integrally attached to two interior surfaces of said two plastic laminating sheets so as to form a rigid laminated gold foil card piece with transparent plastic coating on said two sanded surfaces of said sanded gold foil piece;
(g) cutting said laminated gold foil card piece to remove a plastic fringe formed on the periphery thereof to form a gold foil card of predetermined shape and size; and
(h) printing or pressing predetermined figures and wordings on at least one plastic surface of said laminated gold foil card.

5,702,555
METHOD OF RELEASABLY SECURING THE END OF A ROLL OF MATERIAL
Pierre Candal, Locmariaquer; Guy Mahe, Quimperle, both of France; Georgia Anna Baker, Troy, and James Joseph Duis, Dayton, both of Ohio, assignors to Schweitzer-Mauduit International, Inc., Alpharetta, Ga.
Continuation of Ser. No. 453,733, May 30, 1995, abandoned, which is a division of Ser. No. 123,834, Sep. 20, 1993, abandoned. This application Sep. 19, 1996, Ser. No. 715,718
Int. Cl.⁶ B32B *31/00*
U.S. Cl. 156—247 **11 Claims**

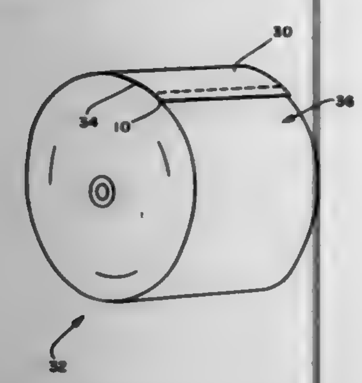

1. A method for releasably securing the end of a roll of material to the roll, comprising:
winding the material around a longitudinal axis of the roll until the end of the material is adjacent an outermost winding of the material on the roll;
disposing a cleavable adhesive tape between opposing surfaces of the end of the material and the outermost winding, the cleavable adhesive tape including a cleavable layer having a first side and a second side, said first side being coated with a first pressure sensitive adhesive layer and said second side being coated with a second pressure sensitive adhesive layer;
pressing the end of the material against the roll so that the adhesive layers of the cleavable adhesive tape adhere to the end of the material and the outermost winding respectively; and
releasing the end of the material by pulling the end of the material away from the outermost winding causing the cleavable adhesive tape to cleave along the cleavable layer, said cleavable layer having a thickness such that, when said cleavable layer is cleaved, a sufficient amount of said cleavable layer remains on said first pressure sensitive adhesive and said second pressure sensitive adhesive to cover each of said adhesive layers.

5,702,556
METHOD AND APPARATUS FOR PRODUCING A LAMINATED VISCOELASTIC PRODUCT
Kiyoshi Okuma; Koichiro Saegusa, both of Sagamihara, and Ryozo Shiono, Tokyo, all of Japan, assignors to Minnesota Mining and Manufacturing Company, St. Paul, Minn.
Continuation of Ser. No. 178,507, Jan. 7, 1994, abandoned. This application Sep. 7, 1995, Ser. No. 524,773
Claims priority, application Japan, Feb. 24, 1993, 5-033659
Int. Cl.⁶ B32B *31/18;35/00;* **B26D** *7/06;* **B26F** *1/14*
U.S. Cl. 156—261 **10 Claims**

1. A method for producing a laminated product having a base element and a viscoelastic element applied to one surface of the base element, from a strip of the laminated product material having a base layer and a viscoelastic layer applied to one surface of the base layer, including the steps of:
(a) providing a die having a die hole, the die hole having the desired profile of the laminated product;
(b) providing a punch for insertion into the die hole, the punch having an operational surface;

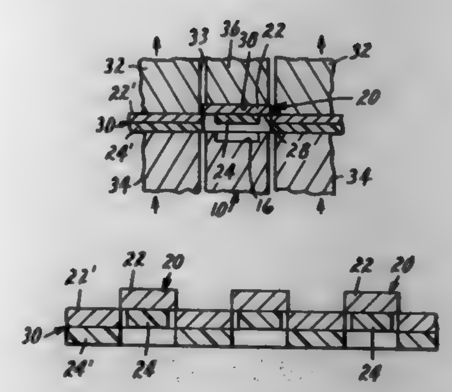

(c) providing a movable member having an operational surface and slidingly mounted in the die hole and resiliently biased outwardly thereof;
(d) providing a protruding edge member projecting from one of (i) the operational surface of the punch;
(e) locating the strip of laminated product material between said punch and the die hole of the die, with the viscoelastic layer facing the protruding edge member;
(f) advancing the operational surface of the punch into contact with the strip of laminated product material so that the viscoelastic layer contacts the protruding edge member;
(g) penetrating the viscoelastic layer with the protruding edge; and
(h) advancing the punch further into the die hole through the strip of laminated product material to punch a laminated product with a profile corresponding to the profile of the die hole, the laminated product being resiliently supported within the die hole by the movable member; wherein the protruding edge member is located so that the viscoelastic element of the laminated product is recessed from a peripheral edge of the base element forming a single layer of the laminated product.

5,702,557
PROCESS FOR THE PRODUCTION OF AN INFORMATION CARRIER
Aloysius Hubertus Manser, Allschwil, Switzerland, and Jacques Francois, Huningue, France, assignors to Ciba Specialty Chemicals Corporation, Tarrytown, N.Y.
Division of Ser. No. 783,701, Oct. 23, 1991, Pat. No. 5,525,400, which is a continuation of Ser. No. 521,802, May 10, 1990, abandoned. This application Mar. 6, 1996, Ser. No. 611,915
Claims priority, application Switzerland, May 16, 1989, 1809/89
Int. Cl.⁶ B32B *31/28;31/12*
U.S. Cl. 156—275.7 **15 Claims**

1. A process for the preparation of a laminated structure which is bonded with a UV-curable and/or VIS-curable composition and which contains at least the following layers: A) a main foil which is substantially impervious to light, B) at least one interlayer based on a cohesive film or web of woven or non-woven fibrous material or of compacted hollow beads or flakes of a thermoplastic material which carries on the side with its back to the main foil an information in the form of a colour pattern, and C) a covering foil which is substantially light-permeable, with the proviso that the interlayer, prior to contact with the curable composition, is substantially impervious to the irradiation necessary for curing the curable composition and becomes transparent when impregnated with the curable composition so as to effect polymerization of multiple layers of curable composition in one irradiation step, which comprises the steps:
a1) applying a layer of a UV-curable and/or VIS-curable composition to the main foil A),
a2) applying the interlayer B) to the main foil A),
a3) applying a further layer of a UV-curable and/or VIS-curable composition to the interlayer B),
a4) applying a covering foil C) to the interlayer B), and

a5) irradiating the laminated structure so obtained through the covering foil C) with UV- and/or VIS-radiation of such a wavelength as to effect complete cure of the curable composition or at least to activate the curable composition so that it may be completely cured in a subsequent heat treatment.

5,702,558
METHOD OF TOP-COATING A VENEERED SUBSTRATE
Richard J. Schadel, Coloma, Mich., assignor to Atlantic Automotive Components, Inc., Benton Harbor, Mich.
Filed Jun. 27, 1996, Ser. No. 672,699
Int. Cl.⁶ B32B *21/14;31/20;31/00*
U.S. Cl. 156—323 **16 Claims**

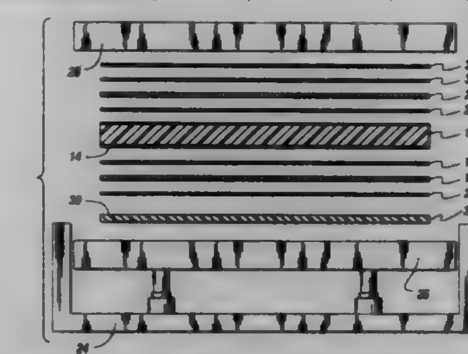

1. A method of top-coating a veneered substrate, comprising:
laying a pad on the bottom platen of a laminating press;
laying a first release masking sheet on the pad;
laying a first polycarbonate sheet on the first release masking sheet;
laying a first urethane adhesive sheet on the first polycarbonate sheet;
laying the veneered substrate on the first urethane adhesive sheet;
laying a second urethane adhesive sheet on the veneered substrate;
laying a second polycarbonate sheet on the second adhesive sheet;
laying a second release masking sheet on the second polycarbonate sheet;
laying a third polycarbonate sheet on the second release masking sheet; and
applying heat and pressure for a predetermined period of time to adhesively secure the first and second polycarbonate sheets to the veneered substrate.

5,702,559
METHOD AND APPARATUS FOR APPLYING A TACTILELY DISTINGUISHABLE MARKING ON AN ARTICLE
Lyn E. Bright, Ceres, Calif., assignor to B&H Manufacturing Company, Inc., Stanislaus County, Calif.
Filed Jul. 13, 1995, Ser. No. 501,995
Int. Cl.⁶ B65C *9/04*
U.S. Cl. 156—450 **19 Claims**

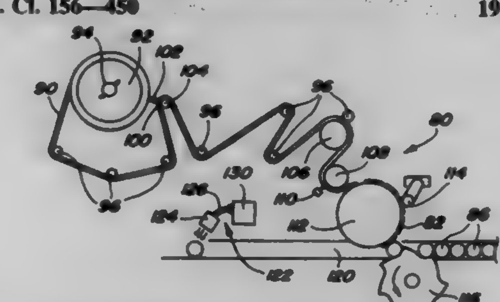

1. A method of labeling a product for identification by visually impaired persons comprising;
providing a labeling machine for making a label and for labeling the product;
feeding a sheet of material for use as said label through the labeling machine;
applying a tactilely distinguishable marking for product identification by visually impaired persons on said label during the feeding of said sheet of material through the machine;
feeding the product through the labeling machine; and
applying said label to the product.

5,702,560
APPARATUS FOR THE MANUFACTURE OF A LAMINATED WEB FROM RECYCLED CORRUGATED CARDBOARD
Larkin P. Skinner, P.O. Box 162841, Austin, Tex. 78716
Continuation of Ser. No. 31,669, Mar. 15, 1993, Pat. No. 5,413,662. This application May 9, 1995, Ser. No. 437,403
Int. Cl.⁶ B32B *35/00*
U.S. Cl. 156—512 **13 Claims**

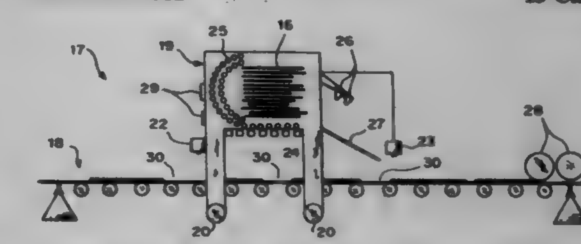

1. An apparatus for the manufacture of a laminated web from recycled corrugated cardboard comprising:
(a) means for sorting panels of corrugated cardboard;
(b) means for laying a first layer of said panels of corrugated cardboard in edge to edge relation;
(c) means for laying a second layer of said panels in edge to edge relation with each other and in face to face relation with said panels of said first layer, at least one of said means for laying said layers being adapted to lay said panels in edge to edge relation in both the direction parallel to the length of the said web and the direction perpendicular to the length of said web; and
(d) means for adhering said first layer to said second layer.

5,702,561
PANEL CLAMPING AND ASSEMBLY RACK
Bradley R. Phillips, 1 Pondora Dr., Buckhannon, W. Va. 26201
Filed Dec. 5, 1995, Ser. No. 567,687
Int. Cl.⁶ B30B *15/00*
U.S. Cl. 156—580 **1 Claim**

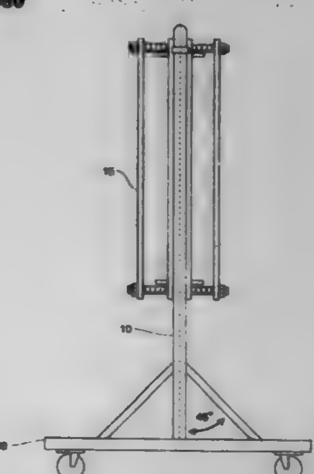

1. An apparatus for gluing wood stock together in a vertical stack such that mating surfaces are each oriented horizontally, to

prevent excess drippage of glue associated with gluing wood stock together such that mating surfaces are each oriented vertically, the apparatus comprising:

a. a frame having a base for resting upon a floor surface;

b. a plurality of spaced jigs attached to the frame along a length of the frame;

c. each jig comprising:

i. an elongated member oriented vertically when the base is resting on the floor surface;

ii. a clamping bar positioned on a side of the elongated member and oriented parallel to the elongated member;

iii. support and adjusting means for supporting the clamping bar and for adjusting the clamping bar toward and away from the elongated member;

iv. spacing and wood support means adapted to support wood stock and to prevent physical contact between the wood stock and the support and adjusting means when the wood stock is placed between the elongated member and the clamping bar; and

d. the jigs adapted to retain vertical stacks of wood stock having mating surfaces oriented horizontally, between the clamping bar and the elongated member.

5,702,562

DRY ETCHING APPARATUS AND METHOD

Ken Wakahara, Tokyo, Japan, assignor to NEC Corporation, Tokyo, Japan

Filed Apr. 29, 1996, Ser. No. 639,775

Claims priority, application Japan, Apr. 27, 1995, 7-103752

Int. Cl.⁶ H01L *21/00*

U.S. Cl. 156—626.1 **5 Claims**

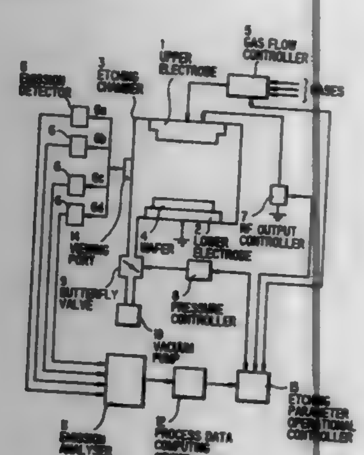

4. A dry etching method for etching an etched material, comprising the steps of:

monitoring simultaneously plasma emission wavelengths and emission intensities which are proper to an etched film, photoresist and etching gas, respectively by a plurality of emission detectors;

calculating an etching rate and a selectivity ratio of said etched film and base film from said intensity ratio therebetween;

deciding a degree of etching reaction on the basis of said etching rate and selectivity ratio calculated; and

correcting a process parameter comprising RF power, degree of vacuum, etching gas flow rate and etching gas flow rate ratio to control said process parameter depending on said decision to said degree of etching reaction.

5,702,563

REDUCED CHEMICAL-MECHANICAL POLISHING PARTICULATE CONTAMINATION

Isidore Salugsugan, Fremont, and Diana M. Schonauer, San Jose, both of Calif., assignors to Advanced Micro Devices, Inc., Sunnyvale, Calif.

Filed Jun. 7, 1995, Ser. No. 477,699

Int. Cl.⁶ H01L *21/304*

U.S. Cl. 156—636.1 **35 Claims**

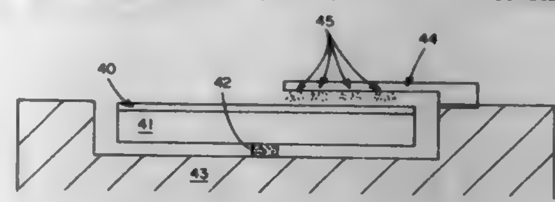

1. A method of sequentially planarizing a plurality of semiconductor wafers, which method comprises:

chemical-mechanical polishing the wafers on a non-fibrous polymeric polishing pad comprising at least one groove in its polishing surface; and

applying a pressurized spray of water to the surface of the polishing pad to substantially remove silica from the groove during periodic conditioning of the polishing pad intermittently between chemical-mechanical polishing operations;

wherein the non-fibrous polymeric polishing pad comprises at least one concentric groove in its polishing surface.

17. The method of sequentially planarizing a plurality of semiconductor wafers, which method comprises:

chemical-mechanical polishing the wafers on a non-fibrous polymeric polishing pad comprising at least one groove in its polishing surface; and

dispensing water to the surface of the polishing pad at a flow rate of about 0.25 to about 0.75 liters/min to substantially remove silica from the groove during periodic conditioning of the polishing pad intermittently between chemical-mechanical polishing operations,

wherein the non-fibrous polymeric polishing pad comprises a plurality of concentric V- or U-shaped grooves on its polishing surface, and the dispensed water substantially removes silica from the grooves.

23. A method of sequentially planarizing a plurality of semiconductor wafers, which method comprises:

chemical-mechanical polishing the wafers on a non-fibrous polymeric polishing pad comprising at least one groove in its polishing surface; and

applying a pressurized spray of ultrapure water to the surface of the polishing pad at a pressure of about 90 to about 110 psi to substantially remove silica from the groove during periodic conditioning of the polishing pad intermittently between chemical-mechanical polishing operations.

5,702,564

METHOD OF ETCHING CONDUCTIVE LINES WITHOUT UNDERCUTTING

Lewis Shen, Cupertino, Calif., assignor to Advanced Micro Devices, Inc., Sunnyvale, Calif.

Filed Jan. 3, 1995, Ser. No. 368,170

Int. Cl.⁶ H01L *21/302*

U.S. Cl. 156—643.1 **27 Claims**

1. A method of manufacturing a semiconductor device having a dense array of conductive lines, comprising:

forming an insulating layer;

forming a layer of conductive material on the insulating layer;

forming a mask on the conductive layer, which mask contains a pattern comprising a dense array of conductive lines bordered by an open field;

etching the conductive layer, in a first etching step, through the mask with a high density plasma of chlorine generated at a first chlorine gas flow rate until the conductive material is substantially completely removed between the conductive

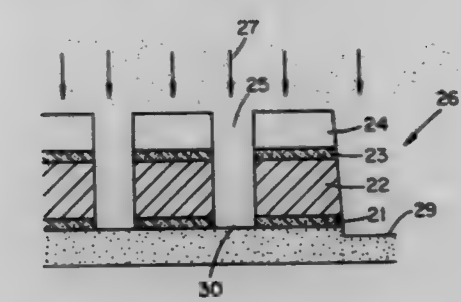

lines in the open field but conductive material remains in the dense array between the conductive lines;

reducing the first chlorine gas flow rate to a second chlorine gas flow rate when the conductive material is substantially removed from the open field but conductive material remains in the dense array between the conductive lines;

etching, in a second etching step, at the reduced second chlorine gas flow rate to until the conductive material between the conductive lines in the dense array is substantially completely removed; and

etching, in a third etching step, to completely remove any resulting residue between the conductive lines of the dense array, and to remove a portion of the underlying insulating layer from the dense array and open field.

5,702,565

PROCESS FOR LASER SCRIBING A PATTERN IN A PLANAR LAMINATE

Xingwei Wu; James Alexander Robert Stiles; Ken Kok Foo, and Phillip Bailey, all of Edmonton, Canada, assignors to Westaim Technologies, Inc., Fort Saskatchewan, Canada

Division of Ser. No. 430,729, Apr. 28, 1995, which is a division of Ser. No. 52,702, Apr. 30, 1993, Pat. No. 5,432,015, which is a continuation-in-part of Ser. No. 996,547, Dec. 24, 1992, abandoned, which is a continuation-in-part of Ser. No. 880,436, May 8, 1992, abandoned. This application May 23, 1995, Ser. No. 449,507

Int. Cl.⁶ B24C *1/22;* **H01L** *39/24*

U.S. Cl. 156—643.1 **16 Claims**

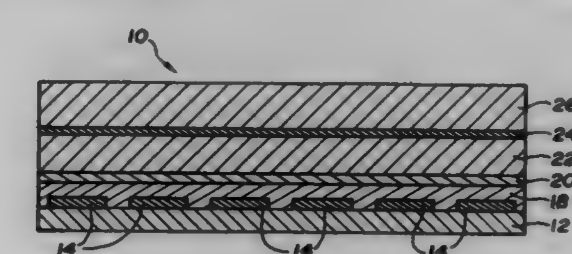

1. A process for laser scribing a pattern in a planar laminate having at least one overlying layer and at least one underlying layer, comprising:

applying a focused laser beam to an area of the pattern to be ablated on the overlying layer side of the laminate, said laser beam having a wavelength which is substantially unabsorbed by the overlaying layer but which is absorbed by the underlying layer, such that at least a portion of the underlying layer is directly ablated and the overlying layer is indirectly ablated throughout its thickness in the area of the pattern to be ablated.

5,702,566

CONDUCTIVE PHOTORESIST TO MITIGATE ANTENNA EFFECT

Bing-Yue Tsui, Hsinchu, Taiwan, assignor to Industrial Technology Research Institute, Hsinchu, Taiwan

Filed Apr. 8, 1996, Ser. No. 629,117

Int. Cl.⁶ H01L *21/00*

U.S. Cl. 156—643.1 **18 Claims**

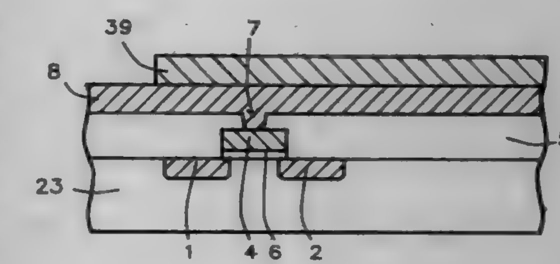

1. A method for mitigating the antenna effect during plasma etching of an integrated circuit comprising:

using an electrically conductive photoresist to protect portions of said integrated circuit that are not to be removed during said plasma etching.

5,702,567

PLURALITY OF PHOTOLITHOGRAPHIC ALIGNMENT MARKS WITH SHAPE, SIZE AND SPACING BASED ON CIRCUIT PATTERN FEATURES

Tadashi Mitsui, and Katsuhiko Hieda, both of Wappingers Falls, N.Y., assignors to Kabushiki Kaisha Toshiba, Japan

Filed Jun. 1, 1995, Ser. No. 457,670

Int. Cl.⁶ H01L *23/544*

U.S. Cl. 156—644.1 **13 Claims**

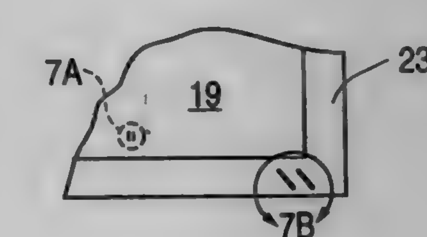

1. A semiconductor integrated circuit fabrication process comprising simultaneously forming a circuit pattern feature and a photolithographic alignment mark on a semiconductor wafer by etching, said alignment mark being formed as a composite mark comprising a plurality of small marks, said small marks being sufficiently close in shape, size and spacing to said circuit pattern feature that an etch rate within an area of said circuit pattern feature and an etch rate within an area of each small mark are substantially the same.

5,702,568
METHOD OF FORMING A VIA HOLE OF A SEMICONDUCTOR DEVICE WITH SPIN-ON-GLASS FILM SEALED BY AN OXIDE FILM

Chan Soo Shin, and Choon Hwan Kim, both of Kyungki-do, Rep. of Korea, assignors to Hyundai Electronics Industries Co., Ltd., Kyungki-do, Rep. of Korea

Filed Jun. 24, 1996, Ser. No. 668,845

Claims priority, application Rep. of Korea, Jun. 24, 1995, 95-17288

Int. Cl.[6] H01L *21/306*

U.S. Cl. 156—644.1 **1 Claim**

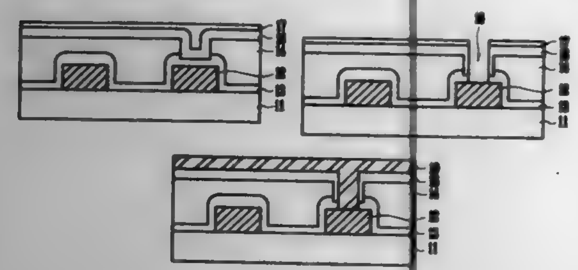

1. A method of forming a via hole of a semiconductor device, comprising the steps of:
providing a wafer having a plurality of metal wires;
forming a first oxide film on said wafer including said metal wires;
coating a first SOG film on said first oxide film;
forming a groove of a first cross sectional width by overetching a portion of said first SOG film enough to expose a portion of said first oxide film;
forming a second thin oxide film on said first SOG film in which said groove is formed;
filling up said groove by coating a second SOG film on said second oxide film;
to form a via hole having a second cross sectional width smaller than said first cross sectional of said groove; and
removing a remaining portion of said second SOG film.

5,702,569
METHOD FOR MANUFACTURING A THIN FILM ACTUATED MIRROR HAVING A STABLE ELASTIC MEMBER

Myung-Hyun Park; Myung-Kwon Koo, and Min-Sik Um, all of Seoul, Rep. of Korea, assignors to Daewoo Electronics, Co., Ltd., Seoul, Rep. of Korea

Filed Aug. 26, 1996, Ser. No. 703,257

Claims priority, application Rep. of Korea, Aug. 30, 1995, 95-27516; Aug. 30, 1995, 95-27517; Nov. 30, 1995, 95-46576

Int. Cl.[6] C03C *15/00;* **B05D** *3/06*

U.S. Cl. 156—662.1 **8 Claims**

1. A method for the manufacture of an array of M×N thin film actuated mirrors forming an array of M×N actuating structures formed on top of an active matrix, wherein M and N are integers, for use in an optical projection system, the method comprising the steps of:
forming a thin film sacrificial layer on top of the active matrix;
depositing an elastic layer on top of the thin film sacrificial layer, wherein the elastic layer comprises at least two layers, each of said at least two layers being made of components with a different stoichiometry;
forming the array of M×N actuating structures on top of the elastic layer, each of the actuating structures including a first thin film electrode, a second thin film electrode, a thin film electrodisplacive member located between said first and second thin film electrodes and adapted to deform when an electric field is applied thereto, and an elastic member arranged to relieve a stress formed in each of the actuating structures when it deforms; and
removing the thin film sacrificial layer by etching it with an etchant, thereby forming the array of M×N thin film actuated mirrors.

5,702,570
PROCESS OF PRODUCING SODIUM HYDROXIDE FROM SODIUM SULPHATE IN A PULP MILL

James W. Smith, and Hoc Nghia Tran, both of Toronto, Canada, assignors to Thor Technology Corporation, North York, Canada

Continuation of Ser. No. 932,557, Aug. 20, 1992, abandoned. This application Jul. 12, 1994, Ser. No. 273,628

Claims priority, application United Kingdom, Aug. 20, 1991, 9117936

Int. Cl.[6] D21C *11/00;11/04*

U.S. Cl. 162—30.1 **13 Claims**

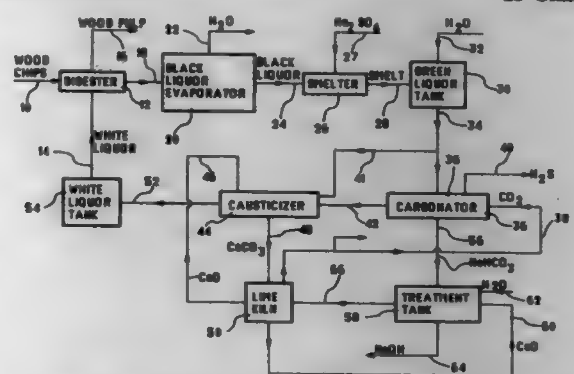

1. A pulp mill process for the production of pulp wherein added sodium sulphate is introduced in an amount in excess of any amount required to make up soda and/or sulphur losses from the pulp mill process and is converted to sodium hydroxide and hydrogen sulphide as products of said pulp mill process, which comprises:
(a) digesting a cellulosic fibrous material in a pulping liquor comprising sodium sulphide and sodium hydroxide to form a pulp and spent pulping liquor,
(b) separating said pulp from said spent pulping liquor and feeding said spent pulping liquor to a spent pulping liquor regenerating operation to form a smelt comprising sodium sulphide and sodium carbonate,
(c) introducing said added sodium sulphate to the spent pulping liquor regenerating operation prior to the smelt-forming step thereof, thus producing a smelt comprising sodium sulphide and sodium carbonate,
(d) dissolving said smelt in water to form a smelt solution and dividing the smelt solution into a first smelt solution stream containing an amount of sodium sulphide corresponding to the molar amount of sodium ions and sulfur in said added sodium sulphate and a second smelt solution stream,
(e) contacting said first smelt solution stream with a carbon-dioxide containing gas stream to convert said sodium sulphide corresponding to the molar amount of sodium ions and sulfur in said added sodium sulphate simultaneously to solid-phase crystalline sodium bicarbonate, mother liquor, spent carbon dioxide-containing gas stream, and hydrogen sulfide,
(f) removing hydrogen sulfide from step (e) in gaseous admixture with said spent carbon dioxide-containing gas stream,
(g) separating said solid-phase crystalline sodium bicarbonate from said mother liquor from said contacting step,
(h) mixing said mother liquor following step (g) with said second smelt solution stream from step (d) to form a combined stream containing sodium sulphide and sodium carbonate,
(i) converting sodium carbonate and any sodium bicarbonate in said combined stream to sodium hydroxide by contact of said combined stream with calcium oxide and water to coproduce solid phase calcium carbonate and thereby form a pulping liquor comprising sodium sulphide and sodium hydroxide,

(j) removing said solid phase calcium carbonate from the pulping liquor,
(k) recycling said pulping liquor from step (j) to said digesting step (a),
(l) converting said sodium bicarbonate from step (g) to aqueous sodium hydroxide by contacting said sodium bicarbonate with calcium oxide and water to coproduce solid phase calcium carbonate,
(m) removing solid phase calcium carbonate from the aqueous sodium hydroxide formed in step (l),
(n) recovering said aqueous sodium hydroxide from step (m) as a product of the pulp mill process,
(o) calcining solid phase calcium carbonate from the solid phase calcium carbonate removal steps (k) and (m) to calcium oxide and to coproduce a carbon dioxide containing gas stream,
(p) forwarding said carbon dioxide containing gas stream from step (o), at least in part, to said sodium sulphide conversion step (e), and
(q) forwarding said calcium oxide produced in step (o) to steps (i) and (l),
whereby said added sodium sulphate is converted to produce aqueous sodium hydroxide and hydrogen sulfide while the balance of soda and sulfur values of the pulp mill process is maintained, said hydrogen sulfide is removed from the pulp mill process in a gas stream from calcination of calcium carbonate and the use of calcium oxide for recausticization to produce pulping liquor is minimized.

5,702,571
SOFT HIGH BULK TISSUE

Richard Joseph Kamps, Wrightstown; Janica Sue Behnke; Fung-jou Chen, both of Appleton, and Darnell Clarence Radtke, Shiocton, all of Wis., assignors to Kimberly-Clark Worldwide, Inc., Neenah, Wis.

Division of Ser. No. 195,762, Feb. 18, 1994, Pat. No. 5,562,805. This application May 13, 1996, Ser. No. 648,527

Int. Cl.[6] D21H *27/02;27/30*

U.S. Cl. 162—117 **6 Claims**

2. A soft wet-pressed tissue sheet having a bulk of about 6 cubic centimeters per gram or greater, a specific elastic modulus of about 4 kilometers or less, and a geometric mean tensile strength of about 500 grams or greater per 3 inches sample width.

5,702,572
METHOD FOR TREATING EXHAUST GASES AND FOUL WATER

Hiroyuki Fujimura, Tokyo; Takayuki Suzuki, Kanagawa-ken; Norio Yamada; Yoshiyuki Ichiki, both of Tokyo; Akihiko Maezawa, and Hideo Hayashi, both of Kanagawa-ken, all of Japan, assignors to Ebara Corporation, Tokyo, Japan

Filed Nov. 26, 1996, Ser. No. 757,736

Claims priority, application Japan, Nov. 27, 1995, 07-329458

Int. Cl.[6] C07C *1/00;* **B01D** *53/00;* **C02F** *3/00;3/30*

U.S. Cl. 204—157.15 **5 Claims**

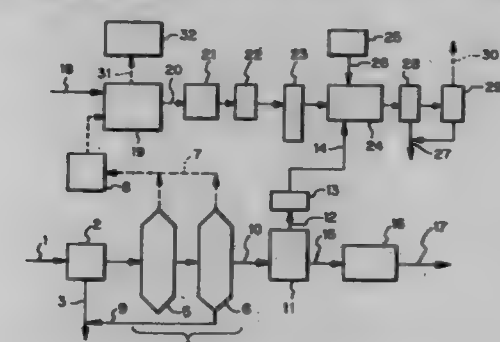

1. A method for treating ammonia-containing foul water and for treating exhaust gas from a combustion apparatus, comprising:
(a) removing coarse solid matter from an organic ammonia-containing influent water of night soil to obtain ammonia-containing effluent, subjecting the said effluent to an anaerobic digestion to degrade organic matter to obtain methane, carbon dioxide and water containing ammonia, and transferring said methane and carbon dioxide from said water containing ammonia into a vapor phase;
(b) recovering ammonia in vapor phase from said water containing ammonia by ammonia stripping, leaving ammonia-stripped water;
(c) condensing said ammonia in vapor phase to form an aqueous ammonia;
(d) treating said ammonia-stripped water with aerobic bacteria to provide biologically treated water;
(e) subjecting said biologically treated water to flocculation to form phosphorous flocculation-containing water;
(f) removing dust particles, using an electric precipitator, from an exhaust gas produced from combustion of a fossil fuel to provide a dust particle-free exhaust gas;
(g) subjecting said dust particle-free exhaust gas to heat exchange with boiler air in an air preheater to provide a heat-exchanged exhaust gas;
(h) cooling said heat-exchanged exhaust gas from step (g) with said phosphorous flocculation-containing water formed in step (e) to provide a cooled exhaust gas; and
(i) exposing said cooled exhaust gas to an electron beam from an electron generator in contact with ammonia obtained from said ammonia-stripping step (c), to obtain ammonium compounds.

5,702,573
METHOD AND APPARATUS FOR IMPROVED LOW PRESSURE COLLIMATED MAGNETRON SPUTTER DEPOSITION OF METAL FILMS

Maximilian Biberger, Palo Alto, and Dennis Conci, San Mateo, both of Calif., assignors to Varian Associates, Inc., Palo Alto, Calif.

Filed Jan. 29, 1996, Ser. No. 592,909

Int. Cl.[6] C23C *14/35*

U.S. Cl. 204—192.12 **23 Claims**

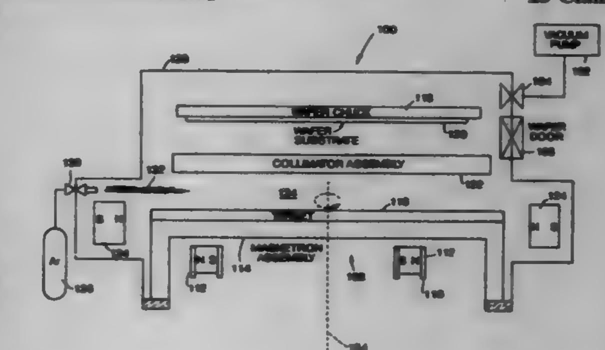

1. A method for depositing a thin film of a metal on a substrate in a magnetron sputter deposition chamber, comprising the steps of:
supplying a collimator assembly between a sputter target comprising the metal to be deposited and the substrate;
supplying a plasma support gas to the chamber through an inlet which causes said plasma support gas to enter the sputter deposition chamber in a region between said collimator assembly and said sputter target;
operating the magnetron sputter deposition chamber at a plasma support gas pressure of less than or equal to about 1.0 millitorr;
applying a negative potential to said sputter target so as to strike a plasma discharge in the magnetron sputter deposition chamber;
rotating a closed-loop balanced magnetron assembly in a first plane about a rotation axis, said magnetron assembly having a plurality of permanent magnetron magnets, each of said magnetron magnets having a N-S polar axis oriented substantially parallel to said first plane, all of said magnetron magnets

arranged so that first pole-type thereof is oriented outwardly from said rotation axis;

supplying a ring-shaped bucking magnet assembly at a periphery of said sputter target and about said rotation axis and disposed generally in a second plane parallel to said first plane, said bucking magnet assembly having a plurality of permanent bucking magnets, each of said bucking magnets having a N-S polar axis oriented substantially parallel to said second plane, all of said bucking magnets oriented so that said first pole-type thereof is oriented inwardly toward said rotation axis; and

injecting electrons in the vicinity of and directed toward a plasma forming region adjacent said sputter target and into said plasma discharge.

5,702,574

JIG FOR COATING ROTOR BLADES

John Foster, Avon; Alan Taylor, Somerset, and Martin Patrick Chatterley, Avon, all of England, assignors to Praxair S.T. Technology, Inc., Danbury, Conn.

PCT No. PCT/GB94/02777, § 371 Date May 3, 1996, § 102(e) Date May 3, 1996, PCT Pub. No. WO95/17535, PCT Pub. Date Jun. 29, 1995

PCT Filed Dec. 21, 1994, Ser. No. 605,322

Claims priority, application United Kingdom, Dec. 21, 1993, 9326082

Int. Cl.^{6} C25D *5/02; 17/06*

U.S. Cl. 204—224 R **6 Claims**

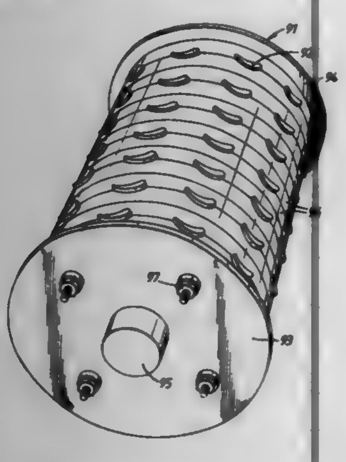

1. A jig for use in the production by electrodeposition of abrasive tips on compressor or turbine rotor blades comprising a hollow, generally cylindrical housing having two end discs and at least one ring therebetween, the discs and the ring defining an interior to receive the majority of each blade, the ring having respective apertures for outer portions of aerofoil parts of the blades to project therethrough, sealing means for sealing the blades as they pass through the respective apertures, and means for securing the discs and the ring together.

5,702,575

METHOD OF PREPARING AN ELECTROCHEMICAL PLANAR METAL/METAL OXIDE ELECTRODE

Joseph S. Foos, Needham, and John S. Bence, Holliston, both of Mass., assignors to Chiron Diagnostics Corporation, E. Walpole, Mass.

Continuation-in-part of Ser. No. 379,405, Jan. 27, 1995, abandoned. This application Nov. 1, 1995, Ser. No. 551,596

Int. Cl.^{6} C25B *11/04*

U.S. Cl. 204—292 **9 Claims**

1. A method for preparing a planar active metal/metal oxide electrode, said method comprising combining a base component consisting essentially of a salt with a metal paste to form a metal paste mixture, heating the metal paste mixture in the presence of air for a time sufficient to cause said heat to oxidize a portion of the mixture to form said metal/metal oxide electrode.

5,702,576

ELECTROCHEMICAL MEASURING CELL

Herbert Kiesele, Lübeck; Rigobert Chrzan, Bad Oldesloe, and Frank Mett, Lübeck, all of Germany, assignors to Dräger-werk Aktiengesellschaft, Lübeck, Germany

Filed Feb. 20, 1996, Ser. No. 603,462

Claims priority, application Germany, Apr. 15, 1995, 195 14 214.4

Int. Cl.^{6} G01N *27/26*

U.S. Cl. 204—415 **20 Claims**

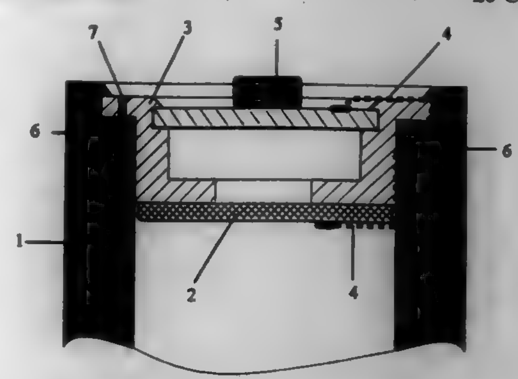

1. An electrochemical measuring cell for detecting components in fluid media, comprising:

a housing accommodating a counterelectrode, a measuring electrode and an electrolyte, said counterelectrode and measuring electrode being in liquid connection with said electrolyte;

a gas-permeable, electrolyte impermeable diaphragm disposed on one side of said housing, said diaphragm for allowing diffusion contact with said measuring electrode from one side of said housing;

a measuring cell cover disposed on another side of said housing, said housing being closed by said measuring cell cover, said housing having a recess formed on an inner side of said housing extending in parallel to a circumferential direction of said housing, said recess and an inside surface of said cover cooperating to define a space between said measuring cell cover and said housing; and

electrolyte-temperature-resistant sealing material means filling said space.

5,702,577

Patent Not Issued For This Number

5,702,578

METHOD OF APPLYING A SURFACE COATING

Hironori Umeda, Iwakuni; Tohru Mashimo, Higashihiroshima; Kazuo Hironaka, Hatsukaichi; Tadamitsu Nakahama; Takakazu Yamane, both of Hiroshima; Makoto Aizawa, and Yukifumi Taniguchi, both of Hiroshima-ken, all of Japan, assignors to Mazda Motor Corporation, Hiroshima, Japan

Continuation of Ser. No. 84,312, Jul. 1, 1993, abandoned, which is a continuation-in-part of Ser. No. 83,771, Jun. 30, 1993, abandoned. This application Mar. 19, 1996, Ser. No. 618,085

Claims priority, application Japan, Jul. 6, 1992, 4-200167; Jul. 21, 1992, 4-214785

Int. Cl.^{6} B05B *13/02*

U.S. Cl. 204—486 **7 Claims**

1. A method of applying a surface coating to a subject surface with a paint spray device which forms a spray pattern of paint having a specified diameter comprising the steps of:

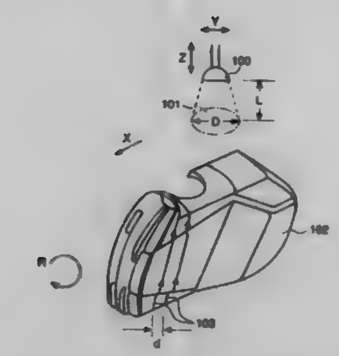

forming an undercoating on the subject surface;

coating an opaque colored base layer over the undercoating; and

coating a transparent layer containing dye coloring on said opaque colored base layer by (1) rotating the subject surface around an axis while continuously moving the subject surface along said axis, (2) operating said paint spray device while continuously moving and rotating the subject surface thereby forming a spiral pattern of paint spray relative to and around said subject surface at regular pitches, (3) keeping a preselected ratio of each of said regular pitches to a width of said pattern of paint spray less than 0.3 and (4) keeping a preselected range of thicknesses of said transparent layer containing dye coloring.

5,702,579

PROCESS FOR MAKING ASCORBIC ACID

Joachim Veits, Rheinfelden, Germany, assignor to Roche Vitamins Inc., Paramus, N.J.

Filed Dec. 13, 1996, Ser. No. 766,695

Claims priority, application Switzerland, Dec. 14, 1995, 3540/95

Int. Cl.^{6} B01D *61/44*

U.S. Cl. 204—522 **16 Claims**

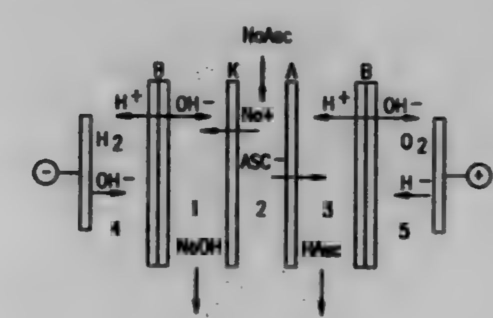

1. A process for the preparation of ascorbic acid from an ascorbic acid salt in an electrolytic cell having an anode and a cathode, comprising:

1) converting the ascorbic acid salt dissolved in water under the influence of an electric field disposed across the anode and cathode into an ascorbate anion and a salt cation;

2) separating the ascorbate anion and the salt cation by means of ion-selective membranes, whereby at least one of the ions migrates across an ion-selective membrane under the influence of the electric field into a second chamber in the electrolytic cell, while simultaneously generating protons and hydroxide ions by splitting water in the electric field;

3) allowing the ascorbate anion in one chamber to react with the proton obtained by the splitting of water to obtain ascorbic acid.

5,702,580

MEASURING SENSOR FOR DETERMINING THE OXYGEN CONTENT OF GAS MIXTURES

Hermann Dietz; Werner Gruenwald, both of Gerlingen; Claudio De La Prieta, Stuttgart; Gert Lindemann, Lichtenstein; Ulrich Eisele, Stuttgart, and Carmen Schmiedel, Benningen, all of Germany, assignors to Robert Bosch GmbH, Stuttgart, Germany

PCT No. PCT/DE95/01305, § 371 Date Mar. 21, 1996, § 102(e) Date Mar. 21, 1996, PCT Pub. No. WO96/11394, PCT Pub. Date Apr. 18, 1996

PCT Filed Sep. 22, 1995, Ser. No. 617,873

Claims priority, application Germany, Oct. 11, 1994, 44 36 222.6

Int. Cl.^{6} G01N *27/407*

U.S. Cl. 204—426 **12 Claims**

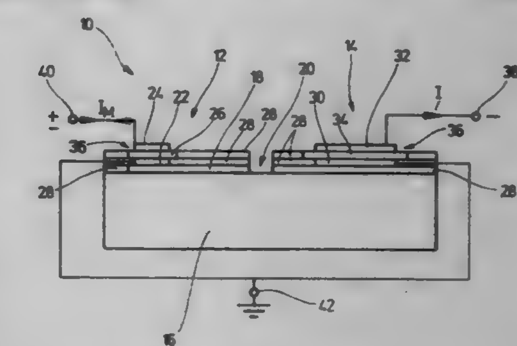

1. A measuring sensor for determining oxygen content in a gas mixture including exhaust gases of infernal combustion engines, comprising:

a base substrate which is comprised of a base material and which is electrically insulating; and

an electrochemical measuring probe and an electrochemical reference probe arranged separate from each other on the base substrate,

wherein the electrochemical measuring probe is comprised of:

(a) a diffusion barrier provided on the base substrate;

(b) at least one internal electrode provided on the diffusion barrier;

(c) a solid electrolyte provided as at least one solid electrolyte island on respective ones of the at least one internal electrode; and

(d) at least one external electrode provided on respective ones of the solid electrolyte islands,

wherein the electrochemical reference probe is comprised of:

(a') a base material layer comprised of a base material which is the same as the base material of the base substrate and which is provided on the base substrate;

(b') an internal electrode provided on the base material layer and in the same plane as that of the at least one internal electrode of the electrochemical measuring probe;

(c') a solid electrolyte provided on the internal electrode and in the same plane as that of the solid electrolyte of the electrochemical measuring probe; and

(d') an external electrode provided on the solid electrolyte and in the same plane as that of the at least one external electrode of the electrochemical measuring probe,

wherein further base material layers comprised of a base material which is the same as the base material of the base substrate are provided around, and in the same respective planes as, the diffusion barrier, the at least one internal electrodes of the electrochemical measuring probe, the internal electrode of the electrochemical reference probe, the solid electrolyte islands of the electrochemical measuring probe, and the solid electrolyte of the electrochemical reference probe, so as to embed at least the diffusion barrier, the at least one internal electrodes for the electrochemical measuring probe, and the internal electrode of the electrochemical reference probe, and

wherein a diffusion hole is defined between the electrochemical measuring probe and the electrochemical reference probe which extends from the base substrate through the diffusion barrier and respective base material layers, and out to the gas mixture to be measured.

5,702,581
SIMPLIFIED PROCESS FOR PRODUCING A CORROSION-PROTECTING, WELL ADHERING LACQUER COATING AND THE WORKPIECES OBTAINED THEREBY

Klaus Gunter Kerlin, Haan, and Peter Hamacher, Wuppertal, both of Germany, assignors to Herberts GmbH, Germany
PCT No. PCT/EP94/02872, § 371 Date May 23, 1996, § 102(e) Date May 23, 1996, PCT Pub. No. WO95/07319, PCT Pub. Date Mar. 16, 1995
PCT Filed Aug. 31, 1994, Ser. No. 596,361
Claims priority, application Germany, Sep. 4, 1993, 43 40 002.2
Int. Cl.[6] C25D *13/20*
U.S. Cl. 204—486 **8 Claims**

1. A process for lacquering metal substrates with a phosphate treatment and electrophoretic dip lacquer coating without the use of environmentally hazardous metal compounds, comprising:
pretreating the metal substrate with a spray or dip phosphate treatment solution without passivation treatment and without toxic metal compounds, to produce a non-passivated, phosphated-coated, metal substrate without toxic metal compounds in the phosphated coating, and
coating the phosphate-coated metal substrate with an electrophoretic dip lacquer which contains a bismuth compound of bismuth lactate, bismuth dimethylolpropionate or a combination thereof and is free from tin and lead compounds, wherein the bismuth compound is present in the lacquer to produce a lacquered metal substrate with significant corrosion protection and substrate adhesion.

5,702,582
MULTI-PORT MULTI-STREAM VALVE APPARATUS

Arthur L. Goldstein; Theodore G. Papastavros, both of Weston, and Emery J. Richard, Lynn, all of Mass., assignors to Ionics, Incorporated, Watertown, Mass.
Filed Jan. 11, 1996, Ser. No. 584,665
Int. Cl.[6] B01D *61/48*
U.S. Cl. 204—632 **11 Claims**

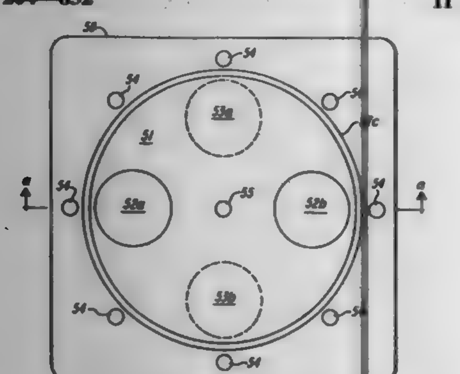

1. Apparatus for selecting at will connections from each of at least two inlet fluid streams, at least two of which streams flow simultaneously, to one or more exit stream means of a group of at least two exit stream means, said apparatus comprising at least one rotationally positionable first body, each said first body comprising an axis of rotation and at least one surface which surface is a surface of rotation of a line or curve about said axis of rotation of said first body, said surface juxtaposed to a surface of a second body which surface of said second body is also a surface of rotation of said line or curve about said axis of rotation of said first body, said first body providing at least a first and a second fluid flow conduit, each said conduit having a first end and a second end, at least the first end of each said conduit located in said one surface of said first body, said second body providing at least a first and a second fluid flow conduit, each said conduit of said second body having a first end and a second end, at least the first end of each said conduit of said second body terminating at said surface of said second body, said first ends of each said conduit in said first body and said first ends of each said conduit of said second body located in such predetermined positions that:
a) said first fluid flow conduit of said first body communicates with said first fluid flow conduit of said second body and said second fluid flow conduit of said first body communicates with said second fluid flow conduit of said second body; and
b) when such first body is rotated around said axis by a predetermined angle then said first fluid flow conduit of said first body communicates with said second fluid flow conduit of said second body and said second fluid flow conduit of said first body communicates with said first fluid flow conduit of said second body, said apparatus also comprising means for rotationally positioning said first body with respect to said second body.

5,702,583
METHOD FOR SELECTIVELY ELECTROPLATING APERTURED METAL OR METALLIZED PRODUCTS

Jorg Werner Rischke, Veldhoven, and Wilhelmus Gijsbertus Leonardus van Sprang, Eindhoven, both of Netherlands, assignors to Meco Equipment Engineers B.V., Hertogenbosch, Netherlands
Division of Ser. No. 186,907, Jan. 27, 1994, Pat. No. 5,512,154. This application Sep. 25, 1995, Ser. No. 533,324
Claims priority, application Netherlands, Jan. 28, 1993, 9300174
Int. Cl.[6] C25D *5/02;13/12*
U.S. Cl. 205—82 **13 Claims**

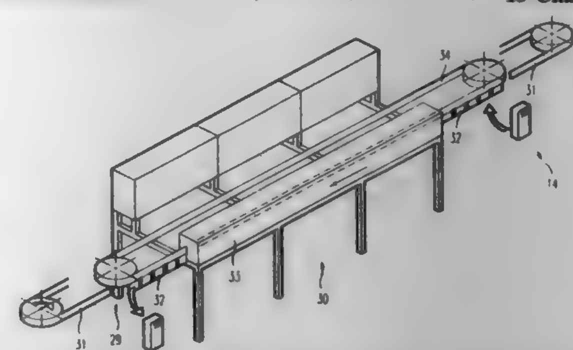

1. A method for selectively electroplating apertured metal or metallized products obtained by stamping or etching, the method comprising the steps of:
continuously transporting apertured products through a photoresist bath during operation, while the products are connected to a power source at least from a time the apertured products enter the bath until the apertured products exit from the bath, so as to electrophoretically apply a fully closed photoresist layer to the apertured products;
covering the apertured products after a drying of the photoresist layer with at least one photomask at desired locations;
exposing the apertured products covered with the at least one photomask;
removing the photoresist layer by means of a developing process from parts of the apertured products to be electroplated after removal of the at least one photomask, while a remaining part of the photoresist layer on the apertured products serves as a mask for the apertured products; and
electroplating those parts of the apertured products from which the photoresist layer has been removed;
wherein:
a glass masking means or a glass masking means with film material laminated thereon is used for exposing the apertured products, said masking means being opaque at desired locations and being moved with the products in a direction parallel to a direction of movement of the products during exposure; and
two light-transmitting plates are disposed between said masking means and a light source and cooling liquid is passed between said two light-transmitting plates.

5,702,584
ENHANCED PLATING ADHESION THROUGH THE USE OF METALLIZED FILLERS IN PLASTIC SUBSTRATE

Lakhi N. Goenka, Ann Arbor; Michael G. Todd, South Lyon, and Andrew Z. Glovatsky, Ypsilanti, all of Mich., assignors to Ford Motor Company, Dearborn, Mich.
Filed Jul. 1, 1996, Ser. No. 675,308
Int. Cl.[6] C25D *5/54;5/56;* **B05D** *3/04*
U.S. Cl. 205—158 **5 Claims**

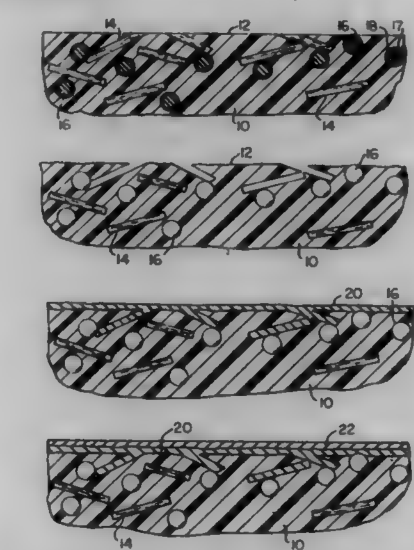

1. A process of plating a metal on a plastic substrate, wherein said substrate has an exposed surface, said process comprising:
incorporating etchable filler elements and etchant-resistant metal filler elements in the plastic substrate so that some etchable filler elements and some metal filler elements are continuous to the exposed surface of the substrate;
etching the exposed surface of the plastic substrate to selectively remove the contiguous etchable filler elements while leaving the contiguous metal filler elements exposed at the substrate surface; and
plating a metal on the exposed surface of the substrate, using the exposed metal filler elements as anchorages for the plating material;
said metal plating step involving the sub-steps of electroless plating a first metal layer on the substrate, and electroplating a second metal layer on the first metal layer.

5,702,585
PROCESS OF PREPARING ALKALI PEROXIDE SOLUTIONS

Eilhard Hillrichs, Büdingen; Manfred Kienberger, Dietzenbach, and Ulrich Sander, Friedrichsdorf, all of Germany, assignors to Metallgesellschaft Aktiengesellschaft, Frankfurt am Main, Germany
PCT No. PCT/EP94/01028, § 371 Date Nov. 16, 1995, § 102(e) Date Nov. 16, 1995, PCT Pub. No. WO94/24336, PCT Pub. Date Oct. 27, 1994
PCT Filed Apr. 1, 1994, Ser. No. 535,129
Claims priority, application Germany, Apr. 8, 1993, 43 11 665.5
Int. Cl.[6] C25B *1/30*
U.S. Cl. 205—468 **10 Claims**

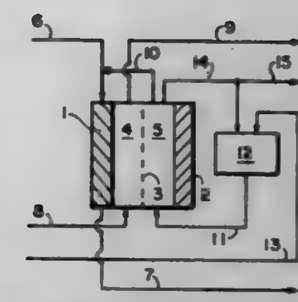

1. A process of preparing an aqueous alkaline solution containing alkali hydroxide and hydrogen peroxide and having an alkali hydroxide/H_2O_2 molar ratio of 0.5 to 2.5, said process comprising the steps of:
a) providing an electrochemical cell having an anode chamber containing an anode and an anolyte, a cathode chamber containing a porous oxygen diffusion cathode and a catholyte, and a cation exchange membrane between the anode chamber and the cathode chamber, and providing a decomposition tank outside the electrochemical cell for receiving an aqueous starting solution containing at least one alkali salt selected from the group consisting of alkali sulfates, alkali hydrogen sulfates, alkali sulfites, alkali hydrogen sulfites, alkali carbonates and alkali hydrogen carbonates;
b) feeding said aqueous starting solution to the decomposition tank, feeding an alkali hydrogen sulfate-containing feed solution from the decomposition tank into the anode chamber to provide the anolyte, feeding an oxygen-containing gas to the porous oxygen diffusion cathode and feeding an alkali hydroxide-containing solution into the cathode chamber to provide the catholyte;
c) after step b), passing an electric current between the anode and the cathode to form said hydrogen peroxide and said alkali hydroxide in the catholyte by cathodic reduction and to form sulfuric acid in the anolyte; and
d) withdrawing a sulfuric acid-containing solution from the anolyte in the anode chamber, feeding at least part of the sulfuric acid-containing solution from the anode chamber into the decomposition tank together with the starting solution and withdrawing the aqueous alkaline solution containing the hydrogen peroxide and the alkali hydroxide from the catholyte as a product solution.

5,702,586
POLISHING DIAMOND SURFACE

Pehr E. Pehrsson, Alexandria, Va., and Michael L. Marchywka, Lanham, Md., assignors to The United States of America as represented by the Secretary of the Navy, Washington, D.C.
Filed Jun. 28, 1994, Ser. No. 266,770
Int. Cl.[6] C25F *3/02;3/16*
U.S. Cl. 205—640 **18 Claims**

1. A process for smoothing a diamond surface containing asperities thereon comprising the steps of:
(a) implanting ions in the diamond surface to form non-diamond carbon on the diamond surface and the asperities by directing an ion beam at an angle of less than 90° from the diamond surface, and
(b) removing the non-diamond carbon by electrochemical etching.

5,702,587
CHEMICAL AND ELECTROCHEMICAL REGENERATION OF ACTIVE CARBON

Arthur L. Clifford, Everett; Dennis F. Dong, Kingston; Timothy A. Mumby, Kingston, and Derek J. Rogers, Kingston, all of Canada, assignors to Huron Tech Canada, Inc., Kingston, Canada
Filed Dec. 20, 1996, Ser. No. 771,053
Int. Cl.[6] C02F *1/46*
U.S. Cl. 205—760 **11 Claims**

1. In a process for electrochemically regenerating the adsorptive capacity of a mass of activated carbon, said carbon comprising

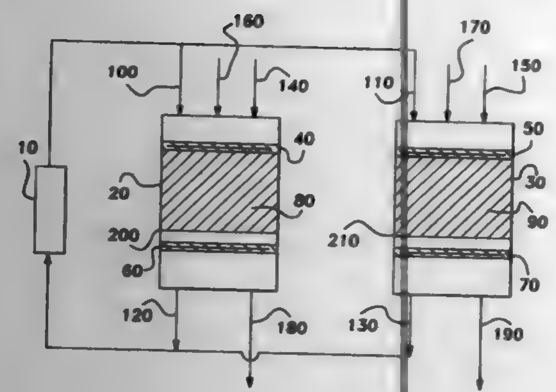

adsorbed, oxidizable, organic material, the improvement wherein said oxidizable, organic material is desorbed from said mass of carbon and substantially decomposed, said process comprising:

A) providing electrolytic cell means comprising an aqueous electrolyte and electrodes, at least one of said electrodes consisting of said mass of carbon and adsorbed oxidizable, organic material,

B) conducting electrolysis to effect desorption of said oxidizable, organic material, said aqueous electrolyte comprising hydrogen peroxide, while feeding an oxygen containing gas to said electrolytic cell, and

C) conducting electrolysis to effect decomposition of said oxidizable, organic material, said aqueous electrolyte comprising hydrogen peroxide, a transition metal or ions thereof, and hydroxyl radicals, while feeding an oxygen containing gas to said cell.

5,702,588

SOAP FIBER EXTRACTION PROCESS

Michael R. Funk, Butler, Pa.; Larry E. Irwin, Overland Park, and Michael D. Foster, Mission Hills, both of Kans., assignors to Semtech, Inc., Shawnee Mission, Kans.

Filed Sep. 23, 1996, Ser. No. 710,864

Int. Cl.[6] C10M *177/00;* **G01N** *11/00*

U.S. Cl. 205—695 **7 Claims**

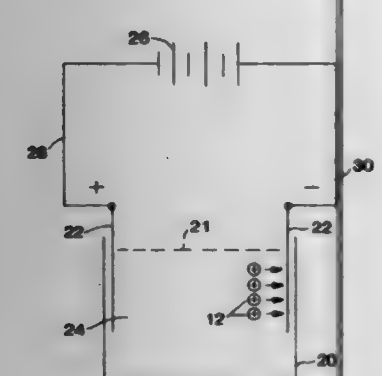

1. A method of separating soap fibers from the liquid phase component of grease to prepare the fibers for microscopic analysis, said method comprising the steps of:

(a) admixing a sample of the grease with a solvent to remove the liquid phase component from the fibers and provide a final liquid product having said fibers therein;

(b) contacting said final product with a pair of spaced electrodes;

(c) applying an electromotive force to said electrodes to charge the same positive and negative respectively; and

(d) withdrawing for analysis a small quantity of said final product from a region thereof proximate the negative electrode, after said electromotive force has been applied for a predetermined period of time.

5,702,589

PROCESS FOR CONVERTING OLEFINIC HYDROCARBONS USING SPENT FCC CATALYST

Chih-Hao Mark Tsang, Houston; Randall Hughes Petty, Port Neches; Glenn Allen Clausen, Port Arthur, and Charles Henry Schrader, Groves, all of Tex., assignors to ABB Lummus Global Inc., Bloomfield, N.J.

Continuation of Ser. No. 429,973, Apr. 27, 1995, abandoned. This application Jul. 3, 1996, Ser. No. 674,963

Int. Cl.[6] C10G *51/02*

U.S. Cl. 208—67 **10 Claims**

1. A fluid catalytic cracking process for cracking a fluid catalytic cracking feedstock and for upgrading a separate feedstock containing olefins selected from the group consisting of C_2 to C_8 olefins and including at least C_2 and C_3 olefins to increase the overall yield of C_4–C_5 olefins and isoparaffins in the fluid catalytic cracking product comprising the steps of:

a. charging a fluid catalytic cracking feedstock into the riser reactor of a fluid catalytic cracking process;

b. charging regenerated fluid catalytic cracking catalyst into said riser reactor;

c. reacting said fluid catalytic cracking feedstock in the presence of said regenerated catalyst in said riser reactor to produce a hydrocarbon effluent and spent catalyst;

d. introducing said hydrocarbon effluent and said spent catalyst into the reactor/stripper of said fluid catalytic cracking process;

e. separating said hydrocarbon effluent and said spent catalyst in said reactor/stripper;

f. charging said separate feedstock containing said olefins to be upgraded to said reactor/stripper;

g. reacting said olefins in the presence of said spent catalyst to oligomerize at least some of said olefins and produce an upgraded olefin product containing additional C_4 and C_5 olefins and isoparaffins;

h. simultaneously stripping said spent catalyst at least in part with said separate feedstock;

i. combining said separated hydrocarbon effluent and said upgraded olefin product to form a combined fluid catalytic product; and

j. removing said spent catalyst from said reactor/stripper and regenerating said spent catalyst.

5,702,590

PROCESS FOR THE REMOVAL OF MERCURY

Geert I. V. Bonte, Diepenbeek, Belgium, and Johannes C. J. De Kock, Landgraaf, Netherlands, assignors to DSM N.V., Heerlen, Netherlands

Filed Nov. 3, 1995, Ser. No. 552,978

Claims priority, application Belgium, May 5, 1993, 9300453

Int. Cl.[6] C10G *31/00;31/09;25/00*

U.S. Cl. 208—251 R **12 Claims**

1. A process for the removal of mercury from a mercury-containing cracker feed, which comprises the combination of steps of:

subjecting said cracker feed to magnetic filtration; and

removing mercury from said cracker feed by contacting said cracker feed with an adsorbent.

5,702,591

FLOTATION METHOD FOR NON-FERROUS METAL VARIABLE ORES

Hideyuki Okamoto; Hiroichi Miyashita, both of Niihama, and Ryoichi Naknyama, Saijo, all of Japan, assignors to Sumitomo Metal Mining Co., Ltd., Tokyo, Japan

Filed Feb. 6, 1996, Ser. No. 596,039

Claims priority, application Japan, Feb. 20, 1995, 7-030361

Int. Cl.[6] B03D *1/06;1/002*

U.S. Cl. 209—167 **4 Claims**

1. A method for the froth flotation of a non-ferrous metal valuable ore which contains said non-ferrous metal valuable ore and pyrite, said method comprising adding gaseous sulfurous acid or aqueous sulfurous acid as a depressant for controlling the floatability of pyrite upon obtaining non-ferrous metal valuable ores as concentrates from ores to a solution of said ore to form a mixture, subjecting said mixture to froth flotation, measuring a redox potential of said ore solution before and after addition of said gaseous sulfurous acid or aqueous sulfurous acid, and determining an optimum addition amount for a desired valuable metal quality enhancing extent of the concentrate by utilizing a proportional relationship which is present between the difference of the potential and the valuable quality enhancing extent of the concentrate.

5,702,592

FILTER MONITORING DEVICE WHICH MONITORS DIFFERENTIAL PRESSURE AND TEMPERATURE

Kanwar Suri, North Ridge, and Z. Paul Akian, Los Angeles, both of Calif., assignors to Western Filter Corporation, Valencia, Calif.

Filed Oct. 20, 1995, Ser. No. 546,299

Int. Cl.[6] B01D *35/143*

U.S. Cl. 210—90 **29 Claims**

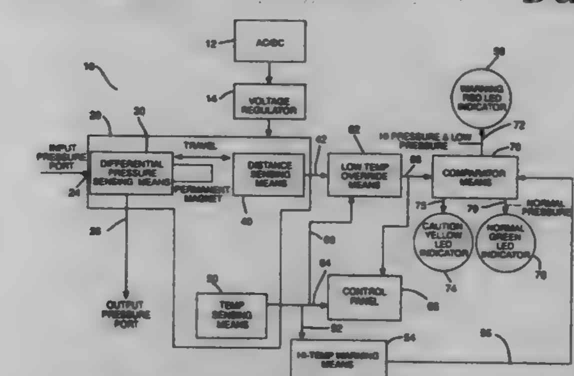

1. A filter monitoring device comprising:

a differential pressure sensing means in communication with a fluid being filtered through a filter element in a filter assembly,

the differential pressure sensing means including a housing defining a chamber, the housing defining a first differential pressure sensing port which extends through the housing and which is in communication with a first supply of fluid upstream of the filter element, and the housing defining a second pressure sensing port which extends through the housing and which is in communication with a second supply of fluid downstream of the filter element;

the differential pressure sensing means including a first movable means which is in communication with the fluid being filtered, the first movable means being axially positioned in the chamber and continuously movable in response to a change in the differential pressure of the fluid in the filter assembly;

the differential pressure sensing means further including a distance sensing means for continuously measuring or detecting movement of the first movable means; the distance sensing means being separated from the fluid in the filter assembly and not in contact with the movable means, the distance sensing means being operatively connected to a first indicator means which conveys the status of the differential pressure of the fluid in the filter assembly; the first indicator means providing a substantially continuous supply of data showing any change in the differential pressure across the filter element, whereby the first indicator means detects pressure variances which are due to contaminant buildup and/or changes in the temperature of the fluid being filtered so that the differential pressure sensing means does not falsely indicate a clogged filter element; and,

the filter monitoring device further comprising a temperature sensing means for continuously measuring or detecting any change in the temperature of the fluid being filtered, the temperature sensing means being connected to a second indicator means for conveying, the status of the temperature of the fluid in the filter assembly, and providing a substantially continuous supply of data showing any change in the temperature of the fluid, whereby the temperature sensing means substantially eliminating a false pressure change indication due to high viscosity of the fluid when the fluid is at a low temperature.

5,702,593

STORMWATER TREATMENT SYSTEM/APPARATUS

Scott W. Horsley, Boston, and Winfried Platz, Barnstable, both of Mass., assignors to Stormtreat Systems, Inc., Barnstable, Mass.

Continuation of Ser. No. 387,476, Feb. 13, 1995, Pat. No. 5,549,817, which is a continuation-in-part of Ser. No. 195,447, Feb. 14, 1994, Pat. No. 5,437,786. This application May 14, 1996, Ser. No. 645,515

Int. Cl.[6] C02F *3/32*

U.S. Cl. 210—122 **17 Claims**

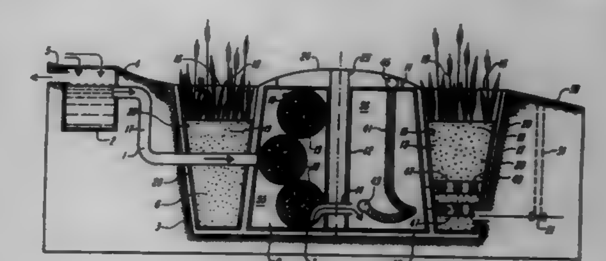

1. A stormwater treatment apparatus comprising,

a watertight integrated sedimentation tank module, said sedimentation tank module having a central sedimentation tank with an open top within it, formed with an annular perimeter basin,

said central sedimentation tank having a removable watertight cover at said open top,

said annular perimeter basin having a wetland formed of sand and gravel deposited within it, said central sedimentation tank including an inlet port from outside said basin for carrying stormwater into said covered central sedimentation tank and having an infiltration section in the wall between it and the annular perimeter basin, said infiltration section being transmissive of water, but generally not transmissive of particulate materials, and located to pass water into said perimeter basin,

said central sedimentation tank being formed with a plurality of bulkheads each extending radially from the center of said central sedimentation tank to the perimeter thereof, said bulkheads dividing said central sedimentation tank into a series of adjacent chambers, a first one of said bulkheads adjacent to said infiltration section being formed to be water impermeable, a second one of said bulkheads adjacent to said inlet port being water impermeable except for an oil and grease trap which passes water into the next chamber while blocking oil and grease from passing, said first and second ones of said bulkheads forming a first chamber coupled to said inlet port, at least one additional water impermeable bulkhead forming at least one additional chamber,

a flexible tube positioned in at least one of said additional chambers, said flexible tube having a float attached to one end for floating on the surface of any water within said chamber with an inlet opening provided in said flexible tube adjacent to said float, below said water surface, the other end of said flexible tube penetrating an adjacent wall common to said chambers and the next adjacent chambers near the bottom of said sedimentation tank, said flexible tube other end having an outlet, whereby water from the surface of water where said float is located passes to the next chamber near the bottom thereof,

an outlet port located near the bottom of said annular perimeter basin, said outlet port including valve means which can be preset to control the throughput of water entering said sedimentation tank and exiting said annular perimeter basin at said outlet port.

5,702,594
APPARATUS FOR TREATMENT OF WASTE WATER AND/OR EXHAUST GASES CONTAINING FLUORINE AND SURFACE ACTIVE AGENTS
Kazuyuki Yamasaki, Hiroshima; Masaki Kataoka, Fukuyama; Kazuyuki Sakata, Fukuyama, and Shirou Imazu, Fukuyama, all of Japan, assignors to Sharp Kabushiki Kaisha, Osaka, Japan
Filed Jun. 6, 1995, Ser. No. 468,755
Claims priority, application Japan, Aug. 26, 1994, 6-201854
Int. Cl.⁶ C02F *3/10;1/58*
U.S. Cl. 210—151 **3 Claims**

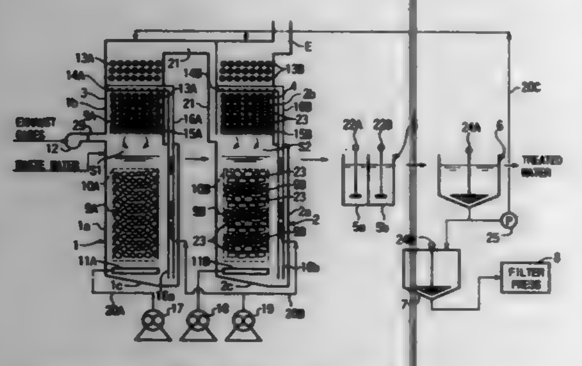

1. A waste water treating apparatus comprising:
a lower portion having a calcium carbonate mineral packed therein so as to be submerged in waste water introduced in the lower portion, and aeration means for agitating the waste water through aeration;
an upper portion located above the lower portion and at a level higher than the surface of the waste water introduced in the lower portion, the upper portion having a calcium carbonate mineral and a plastic filler which are so packed therein as to allow water penetration therethrough;
waste water circulation means for pumping up waste water from the lower portion to the upper portion and spraying the pumped waste water over the upper portion; and
exhaust gas introduction means for introducing exhaust gas into a space between the lower portion and the upper portion.

5,702,595
CATCH BASIN GUARD
William H. Mossburg, Jr., 308 Carr Ave., Rockville, Md. 20850
Filed Dec. 6, 1996, Ser. No. 761,609
Int. Cl.⁶ E01F *5/00*
U.S. Cl. 210—163 **13 Claims**

1. A catch basin face cover for preventing unwanted entry into a catch basin of a curb, the catch basin having a curb wall with an upper portion and a lower portion offset in substantially parallel

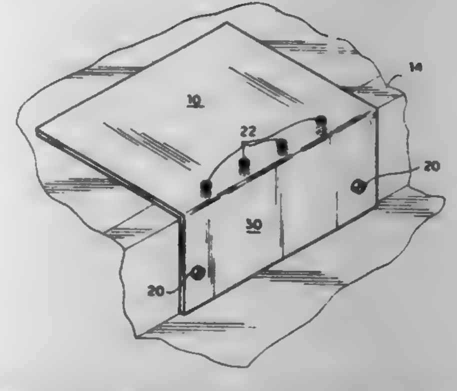

planes from one another and defining a drain entry therebetween, said catch basin face cover comprising:
a planar form having a plurality of throughbores, said planar form dimensioned to cover the drain entry;
a plurality of securing means for attaching said planar form to the curb wall, each of said plurality of securing means positioned in a different one of said plurality of throughbores; and
a plurality of anchoring means for respectively receiving each one of said plurality of securing means, each of said plurality of securing means positioned in the curb wall and coupled to a different one of said plurality of anchoring means;
whereby said planar form covers the catch basin drain entry and said securing means coupled to said anchoring means holds said form over the drain entry.

5,702,596
ROOF WATER INLET
Pierre Juple, and Heinz Haesler, both of Jona, Switzerland, assignors to Geberit Technik AG, Jona, Switzerland
PCT No. PCT/CH94/00229, § 371 Date Jul. 10, 1995, § 102(e) Date Jul. 10, 1995, PCT Pub. No. WO95/15423, PCT Pub. Date Jun. 8, 1995
PCT Filed Nov. 29, 1994, Ser. No. 495,519
Claims priority, application Switzerland, Dec. 1, 1993, 3577/93
Int. Cl.⁶ E04D *13/04*
U.S. Cl. 210—166 **19 Claims**

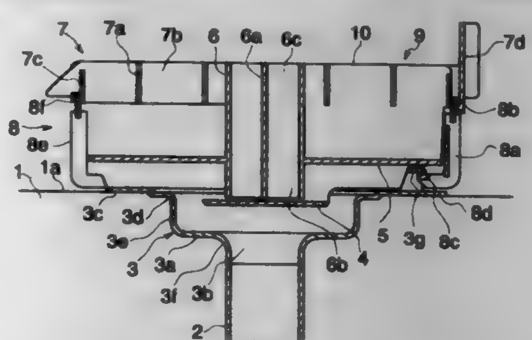

1. A surface drain comprising:
a collection trough with an outer edge substantially positionable in a drain plane of a surface to be drained, said trough including a pan spaced from the drain plane in a downstream direction, said pan defining a drain opening communicable with a drain pipe;
a first plate spaced from said drain plane on a side substantially opposite said pan to define an initial flow opening with said outer edge of said trough, said first plate and said outer edge forming a closed flow for fluid entering said initial flow opening and for accelerating the fluid prior to entering said initial flow opening;
a second plate positioned in said trough to twice deflect a flow of the fluid by substantially 90 degrees and also to accelerate the fluid prior to entering the drain opening;

means to hold said first and second plates in respective positions.

5,702,597
DEVICE FOR PREPARING A TREATMENT LIQUID BY FILTRATION
Jacques Chevallet, Serezin du Rhone, and Jean-Claude Riquier, Rillieux, both of France, assignors to Hospal Industrie, France
Filed Jun. 5, 1995, Ser. No. 462,435
Claims priority, application France, Jul. 26, 1994, 94 09499
Int. Cl.⁶ B01D *63/06;37/02*
U.S. Cl. 210—195.2 **16 Claims**

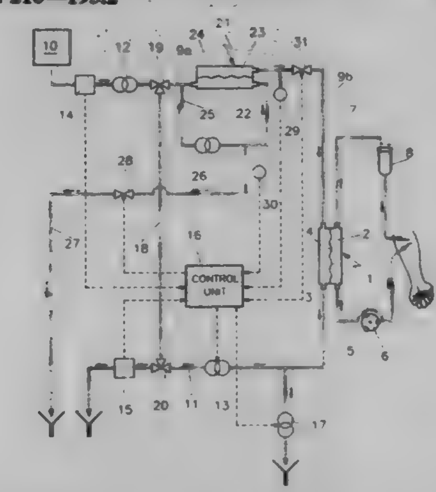

1. A device for use in connection with an extracorporeal blood treatment system having a dialysis liquid circuit, the device comprising:
a supply tube on which is positioned a filter having a first chamber and a second chamber, the first chamber and second chamber being separated by a filtering membrane, the supply tube having a first portion flow-connecting a dialysis liquid source to an inlet of the first chamber, and a second portion having an end flow-connected to an outlet of the second chamber of the filter and another end configured for flow-connection to a treatment liquid inlet of a dialyzer;
a discharge tube having an end configured for flow-connection to a treatment liquid outlet of the dialyzer;
a purge tube flow-connected to an outlet of the first chamber of the filter, with a flow-control element positioned on said purge tube;
a feedback tube flow-connecting the outlet of the first chamber of the filter to the first portion of the supply tube at a connection point;
a flushing pump positioned on the first portion of the supply tube between the connection point and the inlet of the first chamber of the filter, the flushing pump being positioned to cooperate with the feedback tube to recirculate liquid through the first chamber and thereby cause cleaning of the membrane by tangential flushing; and
restriction means arranged on the feedback tube for cooperating with the flushing pump to adjust a liquid pressure in the filter.

5,702,598
MAGNETIC FILTER
John Lemon, 79 5th Ave., Maple Shade, N.J. 08052, and Kenneth Walthall, 1900 Share Crest, Arlington, Tex. 76020
Filed Sep. 19, 1996, Ser. No. 716,067
Int. Cl.⁶ B01D *35/06*
U.S. Cl. 210—223 **4 Claims**

1. A magnetic filter adapted to be selectively mounted on an oil filter canister employed in a vehicle, or on the vehicle transmission

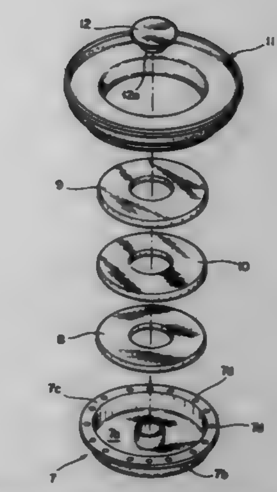

oil pan comprising a cup, said cup having a bottom wall and an integral side wall, an outwardly extending flange integral with an upper peripheral edge of the side wall, an annular disc supported on the bottom wall of said cup, an annular magnet supported on said annular disc, said annular magnet being substantially coplanar with said outwardly extending flange, means extending through said magnet and said disc for holding the magnet and disc in a centered position within said cup, and a suction cup connected to said outwardly extending flange for selectively connecting the cup and magnet to a surface of the oil filter canister or vehicle transmission pan, whereby the suction cup not only holds the magnetic filter on the surface, but also prevents dust and debris from entering the cup.

5,702,599
OIL FILTER COVER
Terry S. Brown, 1216 Cedar Tree La., Tampa, Fla. 33584, and Robert E. Holland, 2021 Art Museum Dr., Jacksonville, Fla. 32207
Filed Oct. 19, 1995, Ser. No. 545,343
Int. Cl.⁶ B01D *27/00*
U.S. Cl. 210—248 **2 Claims**

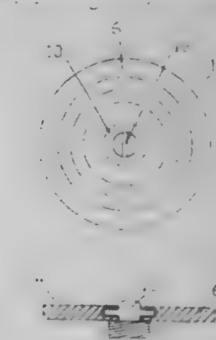

1. A cover in combination with a disposable oil filter having a housing, a plurality of openings extending through said housing and a plurality of internal threads on at least one of said openings for attaching said disposable oil filter to an engine, said cover comprising a cover-plate including a first surface adapted to block said openings and to prevent residual oil contained within said disposable oil filter from leaking through said openings, said cover-plate having a second surface opposite said first surface and an aperture extending through said cover-plate and said first and second surfaces, said cover also comprising a free-spinning knob extending from said aperture adjacent said second surface for a user to hold while attaching and removing said cover from said disposable oil filter, an inner shaft rigidly and non-rotatably connected to said free-spinning knob, said inner shaft including an internal portion disposed within said aperture and an external portion extending from said aperture and disposed adjacent said

first surface, connection means for connecting said free-spinning knob and said inner shaft to said cover-plate, said connecting means including a circumferentially extending groove formed on an inner peripheral surface of said aperture and a flange rigidly and non-rotatable connected to the internal portion of said inner shaft, wherein said flange extends circumferentially about and radially outwardly from the internal portion of said inner shaft and extends into said groove whereby said connecting means permits rotation of said inner shaft within said aperture and substantially prevents axial displacement of said inner shaft from said aperature, and a plurality of external threads located on the external portion of said inner shaft for mating with at least some of said internal threads on said disposable oil filter so that said coverplate may be securely attached to said oil filter to prevent oil from leaking from said openings and adversely affecting the environment after disposal.

5,702,600
VARIABLE RESONANCE DESCALING DECALCIFIER DEVICE CONNECTED TO A FORCED SEQUENTIAL REPHASING TRANSFORMER
Salvatore Mario Pandolfo, La Quercia, Italy, assignor to Instituto Analitico Tuscanese S.r.l., Tuscania, Italy
Filed Jul. 17, 1995, Ser. No. 503,244
Claims priority, application Italy, Mar. 14, 1995, BO95A0102
Int. Cl.⁶ C02F *1/48*
U.S. Cl. 210—222 **7 Claims**

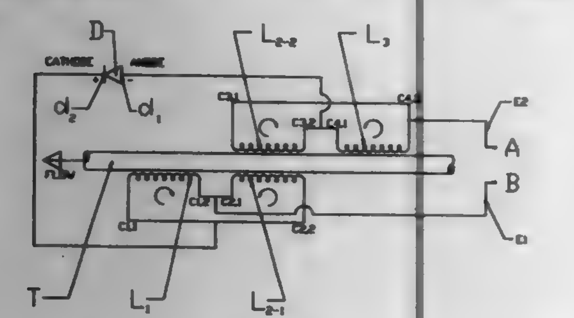

1. Apparatus for treating a liquid flowing in a conduit comprising:
(a) a first coil for surrounding a first portion of the conduit, said first portion having a first end $p_{1,1}$ and a second end $p_{1,2}$, said first coil having a first end $c_{1,1}$ and a second end $c_{1,2}$, $c_{1,1}$ being nearer to $p_{1,1}$ than to $p_{1,2}$, and $c_{1,2}$ being nearer to $p_{1,2}$ than to $p_{1,1}$;
(b) a second coil for surrounding a second portion of the conduit, said second portion having a first end $p_{2,1}$ which is adjacent to $p_{1,2}$ and a second end $p_{2,2}$, said second coil having a first end $c_{2,1}$ and a second end $c_{2,2}$, $c_{2,1}$, being nearer to $p_{2,1}$ than to $p_{2,2}$, and $c_{2,2}$ being nearer to $p_{2,2}$ than to $p_{2,1}$;
(c) a third coil which surrounds the second coil, said third coil having a first end $c_{3,1}$ and a second end $c_{3,2}$, $c_{3,1}$ being nearer to $p_{2,1}$ than to $p_{2,2}$ and $c_{3,2}$ being nearer to $p_{2,2}$ than to $p_{2,1}$;
(d) a fourth coil for surrounding a third portion of the conduit, said third portion having a first end $p_{3,1}$ which is adjacent to $p_{2,2}$ and a second end $p_{3,2}$, said fourth coil having a first end $c_{4,1}$ and a second end $c_{4,2}$, $c_{4,1}$ being nearer to $p_{3,1}$ than to $p_{3,2}$ and $c_{4,2}$ being nearer to $p_{3,2}$ than to $p_{3,1}$;
(e) a first electrical conductor E_1 and a second electrical conductor E_2 for providing alternating current power to the first, second, third, and fourth coils;
(f) a diode having a negative anode end d_1 and a positive cathode end d_2;
(g) first means for electrically connecting $c_{1,2}$ and $c_{2,1}$ to E_1;
(h) second means for electrically connecting $c_{3,1}$ and $c_{4,2}$ to E_2;
(i) third means for electrically connecting $c_{3,2}$ and $c_{4,1}$ to d_1; and
(j) fourth means for electrically connecting $c_{1,1}$ and $c_{2,2}$ to d_2; wherein:
(A) the first, second, third, and fourth means for electrically connecting exclude the first coil, the second coil, the third coil, and the fourth coil;
(B) the first and third coils are wound in a first winding direction;
(C) the second and fourth coils are wound in a second winding direction which is opposite to the first winding direction;
(D) the liquid which is being treated flows in the conduit in a direction from the third portion to the first portion during use of the apparatus; and
(E) the first winding direction is clockwise when looking from the third portion towards the first portion.

5,702,601
STRUCTURE ENHANCING HOLLOW FIBER MODULE
Benjamin Bikson, Brookline; Salvatore Giglia, Norwood; Patrick Samuel Nicholas, Jr., Needham, and Cheryl Ann Ford, Wareham, all of Mass., assignors to Praxiar Technology, Inc., Danbury, Conn.
Filed Mar. 29, 1996, Ser. No. 625,671
Int. Cl.⁶ B01D *63/00*
U.S. Cl. 210—321.79 **20 Claims**

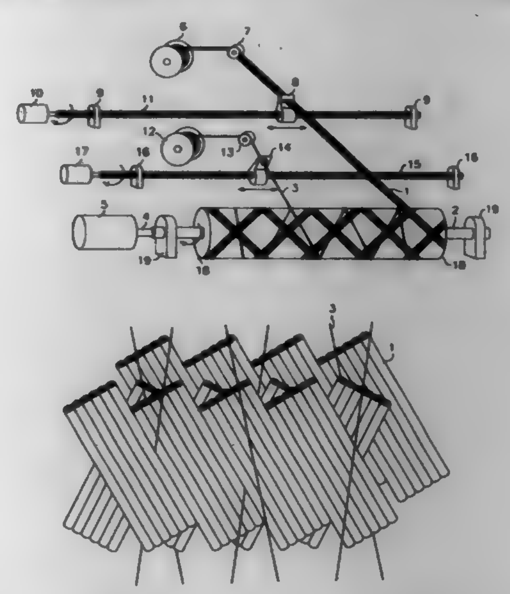

1. An annular fluid separation hollow fiber membrane module having first and second ends and a fluid separation area therebetween, and fluid entrance and exit regions, said module comprised of a plurality of helically wound layers of semi-permeable hollow fibers and at least one reinforcement filament that has been helically wound concurrently with said hollow fibers into the hollow fiber membrane module, wherein at least a portion of said reinforcement filament is located in between said first and second ends, and wherein said at least one reinforcement filament is wound at a different wind angle than the hollow fibers.

5,702,602
FILTER SYSTEM WITH ENVIRONMENTALLY FRIENDLY FILTER CARTRIDGE
Gene W. Brown, and Jeffrey E. D. Rogers, both of Kearney, Nebr., assignors to Baldwin Filters, Inc., Kearney, Nebr.
Filed Dec. 20, 1995, Ser. No. 575,515
Int. Cl.⁶ B01D *35/34*
U.S. Cl. 210—342 **21 Claims**

1. A filter system employing a crushable filter cartridge, and comprising in combination:
a two piece housing configured to be openable to replace the filter cartridge, and closable for filtering,
a cylindrical filter cartridge having filter media defining an inner cylindrical bore and an outer cylindrical periphery, wherein said inner cylindrical bore and said outer cylindrical periphery

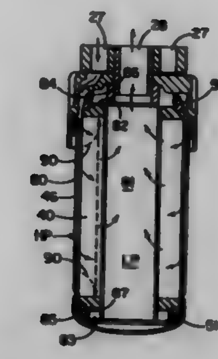

coaxially surround a central axis, said filter media having first and second ends spaced apart along said central axis, said filter cartridge including first and second end caps attached to the filter media at said first and second ends thereof, respectively,
said housing including a filter inlet and a filter outlet for directing flow through the filter cartridge from a higher pressure upstream side at the outer periphery to a lower pressure downstream side at the cylindrical bore,
the filter cartridge having no integral center support tube permanently attached thereto,
the housing having a support tube fluidly connected to said filter outlet and sized to closely fit into the cylindrical bore, the support tube radially supporting an inside surface of the filter cartridge upon insertion into the cylindrical bore,
sealing means for sealing each end cap of the filter cartridge with opposite ends of the housing, wherein said sealing means is arranged to apply fluid pressure from said higher pressure upstream side to high pressure areas heated at axially inner faces of said end caps and to apply fluid pressure from said lower pressure downstream side to low pressure areas located at axially outer faces of said end caps, wherein fluid pressure from said higher pressure upstream side applies first forces on the high pressure areas of said end caps so as to bias said end caps axially away from one another, wherein fluid pressure from said lower pressure downstream side applies second forces to the low pressure areas of said end caps so as to bias said end caps axially toward one another, and wherein respective magnitudes of said first forces are greater than respective magnitudes of said second forces to exert a tension force on the filter media along said central axis of the filter cartridge,
the sealing means including a radial seal gasket on at least one end of the filter cartridge, said radial seal gasket having a peripheral sealing surface that sealingly abuts a cylindrical peripheral surface defined by an upstanding cylindrical wall in the housing to form a radial seal therewith.

5,702,603
SELF-SEALING LIQUID FILTER
Todd W. Johnson, and David G. Fabio, both of P.O. Box 33427, St. Paul, Minn. 55133-3427
Filed Mar. 22, 1996, Ser. No. 620,979
Int. Cl.⁶ B01D *27/06*
U.S. Cl. 210—493.1 **27 Claims**

1. A liquid filter for filtering particles from a liquid said filter comprising a pleated filter material having upstream and downstream pleat tips each pair of upstream and downstream pleat tips being separated by a planar pleat section of the filter material, where the filter material has upstream faces and downstream faces, the upstream pleat tips forming an upstream face of the filter and the downstream pleat tips forming a downstream face of the filter where at least on the downstream face of the filter there is provided a rigid porous support structure, the upstream and downstream faces of the filter material on mutually abutting pairs of planar pleat sections between adjacent upstream and downstream pleat tips are separated by 6 mm or less on average, the downstream face of the filter being in substantially continuous contact with a porous

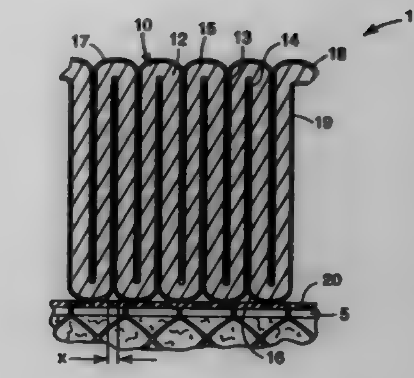

self-sealing fibrous cover layer which self-sealing fibrous cover layer is coplanar with and in substantially continuous contact with the rigid porous support structure and which self-sealing fibrous cover layer performs essentially no filtering function.

5,702,604
APPARATUS AND METHOD FOR WASTE WATER TREATMENT UTILIZING GRANULAR SLUDGE
Kazuyuki Yamasaki, Hiroshima; Atsushi Yokotani, and Shirou Imazu, both of Fukuyama, all of Japan, assignors to Sharp Kabushiki Kaisha, Osaka, Japan
Filed Aug. 8, 1996, Ser. No. 694,119
Claims priority, application Japan, Sep. 6, 1995, 7-229144
Int. Cl.⁶ C02F *3/30*
U.S. Cl. 210—603 **12 Claims**

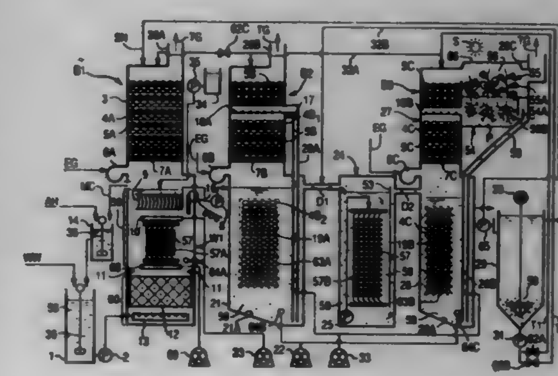

10. A method for wastewater treatment, comprising the steps of:
mixing an alcohol with wastewater to be treated and introducing the mixture into an anaerobic lower portion of a first bioreactor;
aerobically treating the wastewater reaching an aerobic upper portion of the first bioreactor from the anaerobic lower portion;
passing the aerobically treated wastewater through a membrane filter to obtain a filtrate and a membrane concentrated liquid;
introducing the filtrate into a wastewater treatment portion of a second bioreactor which contains charcoal and calcium carbonate mineral, and aerobically treating the filtrate through an action of aerobic microorganisms grown on the charcoal and calcium carbonate mineral; and
mixing the membrane concentrated liquid with the alcohol, then blending the mixture of the alcohol and the membrane concentrated liquid with wastewater to be treated, then introducing the blend into the anaerobic lower portion to produce granulated sludge.

5,702,605

SLIME HYDROLASE PRODUCING BACTERIUM AND PROCESS FOR PRODUCING SLIME HYDROLASE

Katsuyuki Hatanaka, Kyoto, Japan, assignor to Sanyo Chemical Industries, Ltd., Kyoto, Japan

PCT No. PCT/JP95/01513, § 371 Date Jan. 28, 1997, § 102(e) Date Jan. 28, 1997, PCT Pub. No. WO96/04370, PCT Pub. Date Feb. 15, 1996

PCT Filed Jul. 31, 1995, Ser. No. 776,396

Claims priority, application Japan, Aug. 1, 1994, 6-200083

Int. Cl.^{6} C12N *9/24;* **C02F** *1/50;* **D21F** *1/66*

U.S. Cl. 210—632 **17 Claims**

1. A slime-decomposing enzyme producing strain of microorganism characterized by belonging to the genus Cellulomonas and capable of producing an enzyme for decomposition of slimes.

4. A process for producing a slime-decomposing enzyme characterized by culturing a slime-decomposing enzyme producing strain of microorganism belonging to the genus Cellulomonas and capable of producing an enzyme effective for decomposition of slimes and preparing the slime-decomposing enzyme from the resulting culture broth.

6. A method for controlling slimes in industrial water characterized in that an effective amount of the slime-decomposing enzyme prepared by the process for producing a slime-decomposing enzyme according to claim 4 is added to the industrial water.

5,702,606

METHOD OF PRIMING DIALYZER

Frederick H. Peter, Jr., Barrington; Eric Bell, Wheeling, and Thomas M. Feldsein, Palatine, all of Ill., assignors to AKSYS, Ltd., Lincolnshire, Ill.

Division of Ser. No. 388,275, Feb. 13, 1995, Pat. No. 5,591,344. This application Nov. 17, 1995, Ser. No. 560,439

Int. Cl.^{6} B01D *61/30;61/32*

U.S. Cl. 210—646 **6 Claims**

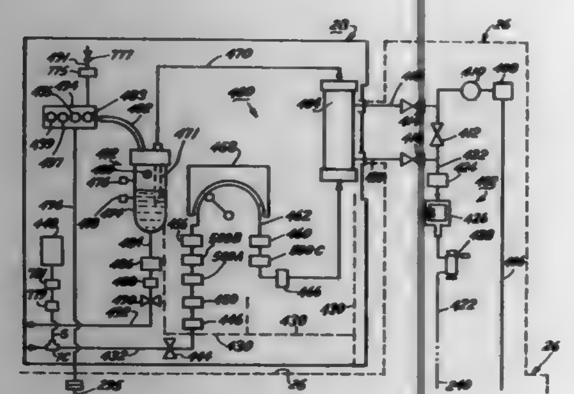

1. A method of automatically priming a dialyzer in an extracorporeal circuit, said dialyzer having a membrane and a blood side thereof and a dialysate side thereof, the method performed in situ in a dialysis machine, comprising the steps of:

substantially filling said extracorporeal circuit and said blood side of said dialyzer with fluid;

inducing multiple brief pressure pulses in said fluid in said extracorporeal circuit and blood side of said dialyzer, said multiple brief pressure pulses causing air bubbles on said membrane on said blood side of said dialyzer to be sheared off the blood side of said membrane; and

conducting said air bubbles from said blood side of said dialyzer and removing said air bubbles from said extracorporeal circuit.

5,702,607

ON-SITE AUTOMATED CLOSED LOOP PETROLEUM BASED HYDROCARBON FLUID FILTRATION AND RECYCLING SYSTEM

David M. Lawson, 16 Chatham Ct., San Jose, Calif. 95139

Filed Jul. 8, 1996, Ser. No. 676,983

Int. Cl.^{6} B01D *15/00;37/00*

U.S. Cl. 210—663 **31 Claims**

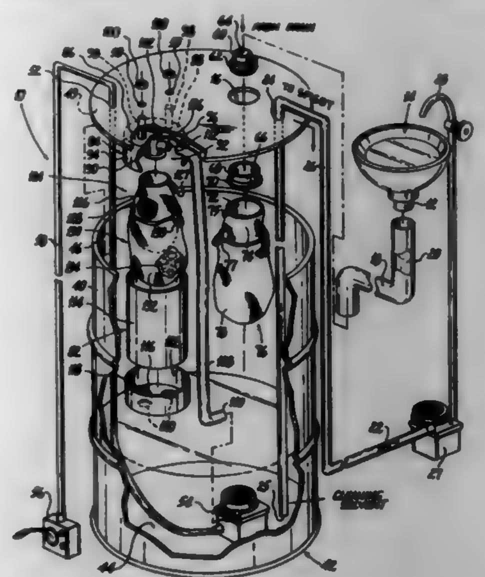

31. A method of automatically recycling a spent petroleum based hydrocarbon fluid on-site and simultaneously continuously dispensing on-site a recycled petroleum based hydrocarbon fluid that is the spent petroleum based hydrocarbon after being recycled, comprising the step of passing the spent petroleum based hydrocarbon fluid through an on-site automated closed loop petroleum based hydrocarbon fluid filtration and recycling system which comprises:

a) a hollow and open-top fluid reservoir having a closed bottom with an inner surface, and an open top disposed above said closed bottom of said hollow and open-top fluid reservoir;

b) a lid having an outer surface, an inner surface, an inlet throughport extending vertically therethrough, an output throughport extending vertically therethrough, and selectively opening and closing said open top of said hollow and open-top fluid reservoir, so that internal components housed in said hollow and open-top fluid reservoir can be readily serviced;

c) inlet means for inputting the spent petroleum based hydrocarbon fluid into said hollow and open-top fluid reservoir; said inlet means being disposed in said inlet throughport in said lid;

d) outlet means for outputting the recycled petroleum based hydrocarbon fluid from said hollow and open-top fluid reservoir; said outlet means being disposed in said outlet throughport in said lid;

e) a first filtering stage contained in said hollow and open-top fluid reservoir and being removably attached to said inlet means; said first filtering stage removing large particles of dirt and grease from the spent petroleum based hydrocarbon fluid passing therethrough;

f) a second filtering stage encasing said first filtering stage and being contained in said hollow and open-top fluid reservoir; said second filtering station being removably attached to said inlet means and removing small particles of dirt and grease from the spent petroleum based hydrocarbon fluid passing therethrough;

g) a submersible internal pump having an operating time and being disposed in said hollow and open-top fluid reservoir on said inner surface of said closed bottom of said hollow and open-top fluid reservoir, in proximity to said outlet means; said submersible internal pump drawing in the spent petroleum based hydrocarbon fluid passing through said second filtering stage;

h) a third filtering stage contained in said hollow and open-top fluid reservoir and being tandemly disposed to said first filtering stage and said second filtering stage; said third filtering stage adsorbing grease and dirt from the spent petroleum based hydrocarbon fluid passing therethrough;

i) connecting means for fluidly connecting said submersible internal pump to said third filtering stage and being contained in said hollow and open-top fluid reservoir; said connecting means transporting the spent petroleum based hydrocarbon fluid drawn in by said submersible internal pump to said third filtering stage; and

j) a fourth filtering stage encasing said third filtering stage and being contained in said hollow and open-top fluid reservoir; said fourth filtering station removing discoloration from the spent petroleum based hydrocarbon fluid passing therethrough, so that the spent petroleum based hydrocarbon fluid passes downwardly through said first filtering stage and is purged of large particles of dirt and grease, then passes downwardly through said second filtering stage and is purged of small particles of dirt and grease, then is drawn into said submersible internal pump, then is pumped upwardly through said connecting means, then passes downwardly through said third filtering stage and is purged of dirt and grease, then passes downwardly through said fourth filtering stage and is purged of discolorations, then enters into said hollow and open-top fluid reservoir, and then is drawn into said outlet means as the recycled petroleum based hydrocarbon fluid.

5,702,608

PROCESS AND INSTALLATION FOR THE DECONTAMINATION OF RADIOACTIVE NITRIC EFFLUENTS CONTAINING STRONTIUM AND SODIUM

Jacques Foos, Orsay; Alain Guy, Pont Carbe; Marc Lemaire, Villeurbanne; Bruno Leclere, Cherbourg; Gérard Le Buzit, Crosne, and Pierre Doutreluingne, Cherbourg, all of France, assignors to Compagnie Generales Des Matieres Nucleaires, Velizy-Villacoublay, France

PCT No. PCT/FR94/00840, § 371 Date Feb. 5, 1996, § 102(e) Date Feb. 5, 1996, PCT Pub. No. WO95/02250, PCT Pub. Date Jan. 19, 1995

PCT Filed Jul. 7, 1994, Ser. No. 571,847

Claims priority, application France, Jul. 8, 1993, 93/08417

Int. Cl.^{6} C02F *1/42*

U.S. Cl. 210—668 **13 Claims**

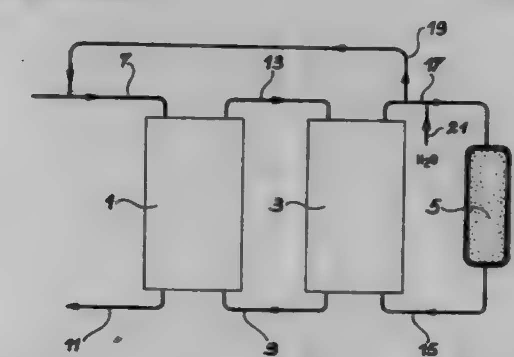

1. Process for the decontamination of a radioactive nitric aqueous effluent containing strontium and sodium, wherein the effluent has a nitric acidity of 0.5 to 2N, a strontium concentration up to 2 μg/l and a sodium concentration of 0.01 to 0.2 mol/l, comprising the steps of:

a) contacting the aqueous effluent with an organic phase incorporating a crown ether and a diluent, chosen so as to obtain an extraction selectivity of strontium compared with sodium such that the D_{Sr}/D_{Na} ratio, in which D_{Sr} and D_{Na} respectively represent the strontium and sodium distribution coefficients, is equal to or above 100 and D_{Sr} is at least equal to 1,

b) reextracting the strontium present in the organic phase in an aqueous solution, and

c) fixing the strontium reextracted in said aqueous solution on a cation exchange resin.

5,702,609

WATER RETRIEVAL FROM AQUEOUS MIXTURE OF ORGANIC PHOSPHATES

Carey M. Merritt, Pulaski, N.Y., assignor to Niagara Mohawk Power Corporation, Syracuse, N.Y.

Filed Mar. 27, 1995, Ser. No. 410,983

Int. Cl.^{6} C02F *1/28;1/42*

U.S. Cl. 210—669 **30 Claims**

1. The process of separating aryl phosphates and esters and hydrolysates thereof from water in an aqueous mixture thereof comprising,

forming a superposed layer from said mixture of said phosphates, esters and hydrolysates, and water and a lower layer of primarily said esters and phosphates,

removing said lower layer of said esters and phosphates to isolate said upper or superposed layer of said mixture, filtering said layer of said mixture with a filter having a pore size of between 1 micron to about 25 microns,

subjecting the effluent from said filtering to demineralization with an anion exchange resin,

thereafter subjecting the effluent from said demineralization to a sorber composed of organic polymeric material to produce an effluent consisting essentially of water substantially without said phosphates, esters or hydrolysates thereof.

5,702,610

SHEET MATERIALS FOR SOLID PHASE EXTRACTIONS AND SOLID PHASE REACTIONS

Donald F. Hagen; Simon S. Fung, both of Woodbury, and Paul E. Hansen, Lake Elmo, all of Minn., assignors to Minnesota Mining and Manufacturing Company, St. Paul, Minn.

Continuation of Ser. No. 172,042, Dec. 22, 1993, abandoned. This application Jan. 9, 1996, Ser. No. 586,937

Int. Cl.^{6} C02F *1/28*

U.S. Cl. 210—670 **25 Claims**

1. A method comprising the step of passing a fluid containing an analyte through a solid phase extraction or reaction sheet article comprising at least one sorptive polymer pulp which is substantially nonswellable, and at least one of sorptive and reactive particulates enmeshed therein, said polymer pulp being selected from the group consisting of 1) aramid pulp or derivatives thereof, 2) a blend of aramid pulp or a derivative thereof with polyolefin pulp or polyacrylonitrile pulp or fibrillated polytetrafluoroethylene, and 3) a blend of polyacrylonitrile pulp with polyolefin pulp, said sheet being prepared by a wet-laid process, wherein in said method said analyte becomes sorbed or reacted and becomes bound to at least one of said polymer pulp and said particulates in said sheet article.

5,702,611

PROCESS FOR REMOVING HEAVY METAL IONS BY ION EXCHANGE

Dana A. Gronbeck, Holliston, Mass.; Kathleen M. O'Connell, Cumberland, R.I.; William Andrew Burke, Bass River; Michael N. Gaudet, Fitchburg, both of Mass., and Stefan J. Caporale, Summit, N.J., assignors to Shipley Company, L.L.C., Marlborough, Mass.

Filed Jan. 14, 1997, Ser. No. 783,131

Int. Cl.^{6} B01D *15/04*

U.S. Cl. 210—686 **20 Claims**

1. A process for removing heavy metal ions contained in an organic solution of one or more photoresist or antireflective components while inhibiting introduction of acid into solution, said process comprising the steps of providing a chelating cation exchange resin, washing said chelating cation exchange resin with an acid to remove essentially all metal ions therefrom and rinsing said acid washed chelating cation exchange resin with water until the water effluent has a pH varying between about 1 and 7, homogeneously admixing the chelating cation exchange resin with

an anion exchange resin and contacting said organic solution containing heavy metal ions with said mixture of chelating cation exchange resin and anion exchange resin, the contact between the solution and the mixed exchange resins being for a time sufficient to reduce the concentration of said heavy metal ions contained in said organic solution.

5,702,612
METHOD AND APPARATUS FOR FLOTATION SEPARATION
Xiang-Huai Wang, Lexington, Ky., assignor to University of Kentucky Research Foundation, Lexington, Ky.
Filed Jul. 28, 1995, Ser. No. 508,819
Int. Cl.[6] C02F *1/24;* B03D *1/24*
U.S. Cl. 210—703 10 Claims

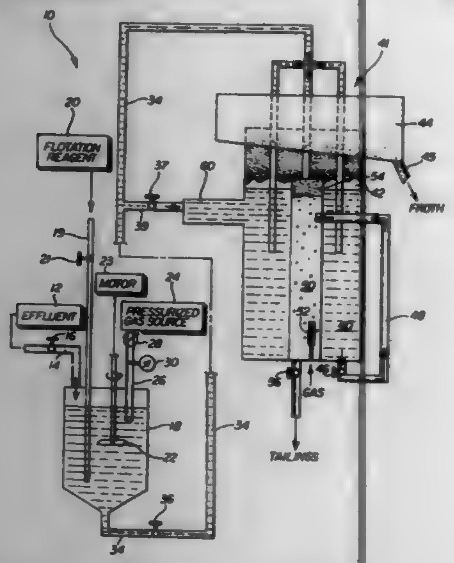

1. A method of separating a selected constituent from an effluent of an industrial process comprising the steps of:
mixing the effluent with a flotation reagent;
dissolving gas into the effluent;
introducing a resulting effluent, flotation reagent and dissolved gas mixture into a third chamber of a flotation cell acting as a rougher separator in fluid communication with a first chamber of the flotation cell under conditions promoting a release of dissolved gas as microbubbles in the mixture, said third chamber having a longitudinal axis extending at an angle substantially perpendicular to a longitudinal axis of said first chamber;
recovering floated selected constituent from the first chamber and delivering non-floated tailings from the first chamber to a second chamber of the flotation cell;
sparging gas into the non-floated tailings delivered to the second chamber; and
recovering the selected constituent from the non-floated tailings being processed in the second chamber.

5,702,613
POLYMERS CONTAINING VINYLAMINE/ VINYLFORMAMIDE AS DEMULSIFIERS IN OILY WASTEWATERS
Anthony G. Sommese, and Ananthasubramanian Sivakumar, both of Naperville, Ill., assignors to Nalco Chemical Company, Naperville, Ill.
Filed Apr. 29, 1994, Ser. No. 235,748
Int. Cl.[6] C02F *1/56*
U.S. Cl. 210—708 8 Claims

1. A method of removing emulsified oil from an industrial wastewater stream, the method comprising the steps of adding a water-soluble vinylamine containing polymer having a molecular weight of at least about 25,000 to the oil containing wastewater stream in a concentration of from about 0.1 to about 100 parts per million, based on the total volume of the water being treated, the vinylamine containing polymer including from about 50 to about 100 mole percent vinylamine and from about 0 to about 50 mole percent of at least one monomer selected from the group consisting of amidine, vinylformamide, vinyl acetate, and vinyl pyrrolidinone, wherein the addition of the vinylamine containing polymer to the oil containing wastewater stream causes the emulsified oil to flocculate; and removing the flocculated oil from the wastewater stream.

5,702,614
FLUID TREATMENT METHOD
Jeffrey Robert Taylor, 1 Princess St., New Victoria 3158, Australia
PCT No. PCT/AU94/00368, § 371 Date Jan. 4, 1996, § 102(e) Date Jan. 4, 1996, PCT Pub. No. WO95/01936, PCT Pub. Date Jan. 19, 1995
PCT Filed Jul. 4, 1994, Ser. No. 571,935
Claims priority, application Australia, Jul. 5, 1993, PL9778
Int. Cl.[6] C02F *1/58*
U.S. Cl. 210—738 19 Claims

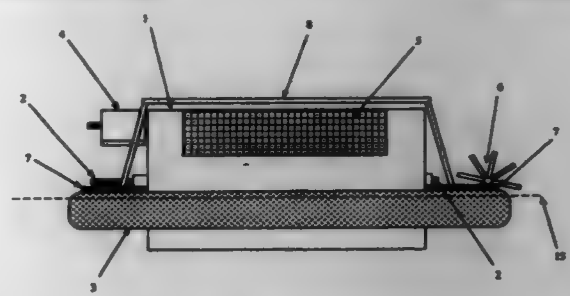

1. A device for treating a fluid in a fluid reservoir, said device comprising:
a chamber,
loading means arranged to facilitate supply of treatment reagent particles into said chamber,
holding means for supporting said chamber partially submerged in the fluid reservoir,
inlet/outlet means for allowing fluid from the fluid reservoir to pass into said chamber and mix with said particles, and to facilitate return of fluids treated in said chamber into said fluid reservoir, and
drive means for rotating said chamber about an axis to effect crushing and/or abrading of the treatment reagent particles in said chamber and facilitate mixing of said particles with said fluid.

5,702,615
METHOD FOR THE TREATMENT OF WASTE WATER
Shigeaki Numata, and Souichi Shibuya, both of Kawasaki, Japan, assignors to Kawasaki Kasei Chemicals Ltd., Tokyo, Japan
Filed Jun. 24, 1996, Ser. No. 670,786
Claims priority, application Japan, Jun. 27, 1995, 7-161301
Int. Cl.[6] C02F *1/72*
U.S. Cl. 210—759 14 Claims

1. A method for the treatment of waste water, which comprises treating waste water containing at least a sulfide-type malodorous substance with an amount effective to remove the sulfide-type malodorous substance of a transition metal compound and hydrogen peroxide or a hydrogen peroxide-forming peroxide, wherein at least a compound of an iron family element which is iron, cobalt or nickel and a compound of a vanadium family element which is vanadium, niobium or tantalum are used as the transition metal compounds, the ratio of vanadium family element compound to the iron family element compound being 0.05 to 10 mol times.

5,702,616
ARAMID FIBER FILTRATION SHEET
Peter J. Degen, Huntington, and Warren M. Foss, Glen Cove, both of N.Y., assignors to Pall Corporation, East Hills, N.Y.
Division of Ser. No. 236,515, Apr. 29, 1994, Pat. No. 5,529,844. This application Apr. 24, 1996, Ser. No. 638,958
Int. Cl.[6] B01D *39/08;27/06;* D02G *3/00*
U.S. Cl. 210—767 68 Claims

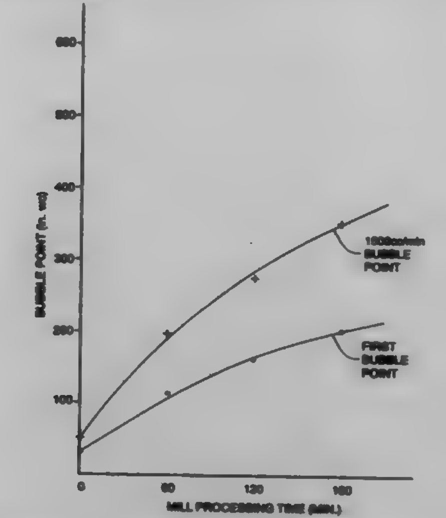

1. A method of treating a fluid comprising passing a fluid through an aramid fiber sheet having a first bubble point of about 100 in. water column or more.

5,702,617
PARTICULAR REMOVAL ASSEMBLY AND METHOD
Arnold James Price, P.O. Box 561, Muleshoe, Tex. 79347
Filed Oct. 12, 1995, Ser. No. 542,392
Int. Cl.[6] B01D *21/00*
U.S. Cl. 210—803 10 Claims

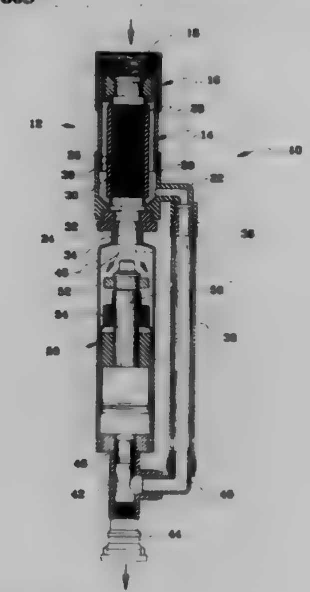

9. A method for removing sand from a fluid, comprising the steps of:
trapping the sand and fluid in a sand trap having a sand discharge and filtrate outlet;
filtering the fluid from the sand in said sand trap;
removing filtered fluid;
pressurizing a piston by means of the filtered fluid;
closing said sand discharge by means of said piston;
filling said sand trap with the sand;
reducing the flow of the filtered fluid from said sand trap; and
depressurizing said piston thereby releasing the sand.

5,702,618
METHODS FOR MANUFACTURING A FLOW SWITCH
Elric W. Saaski, Bothell, and Dale M. Lawrence, Lynnwood, both of Wash., assignors to Research International, Inc., Woodinville, Wash.
Division of Ser. No. 131,762, Oct. 4, 1993, abandoned. This application May 19, 1995, Ser. No. 444,075
Int. Cl.[6] B44C *1/22;* H02L *21/00*
U.S. Cl. 216—2 11 Claims

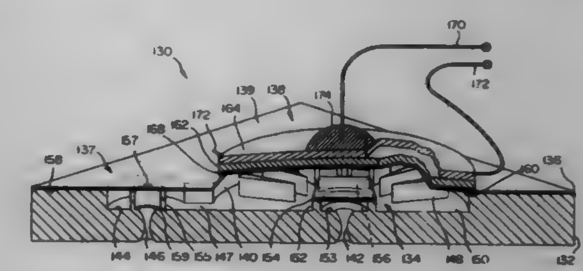

1. A method for manufacturing a flow switch, wherein said flow switch comprises: a substrate, a membrane, and a switch gap; wherein said substrate comprises a substrate mounting portion, an inlet switch seat, and outlet port means; wherein said membrane comprises a membrane mounting portion, a resilient flexure which extends over at least a portion of said inlet switch seat, and an inlet port means, which is located over said inlet switch seat; wherein said switch gap is located between said flexure and said switch seat; wherein said inlet port means of said membrane are for receiving a fluid from a fluid source, and are for conveying said fluid through said membrane to said switch gap; wherein said outlet port means of said substrate are for permitting said fluid to flow from said switch gap and out of said flow switch; wherein, when a positive driving pressure difference of said fluid across said flow switch, which is less than a driving pressure difference switch point, is applied to a top surface of said flexure and to said inlet port means, said fluid flows into said flow switch through said inlet port means, flows radially outwardly across a top surface of said inlet switch seat through said switch gap; and flows out of said flow switch through said outlet port means; wherein, at said driving pressure difference switch point, said flexure automatically collapses against said inlet switch seat, to automatically close said switch gap, switch off said flow switch, and stop said fluid from flowing through said flow switch; and wherein, at said positive driving pressure difference of said fluid across said flow switch which is less than said driving pressure difference switch point, said resilient flexure automatically moves away from said inlet switch seat, to automatically open said switch gap, switch said flow switch back on, and permit said fluid to flow through said flow switch once again; and wherein said method comprises the steps of: micromachining at least a portion of at least one of said inlet port means and said outlet port means, by etching said at least a portion of at least one of said inlet port means and said outlet port means into said membrane and said substrate, respectively; and securing said membrane mounting portion and said substrate mounting portion together.

5,702,619

METHOD FOR FABRICATING A HIGH PRESSURE PIEZORESISTIVE TRANSDUCER

Anthony D. Kurtz, Teaneck, N.J.; Andrew V. Bemis, Chestnut Ridge, N.Y.; Timothy A. Nunn, Ridgewood, and Alexander A. Ned, Bloomingdale, both of N.J., assignors to Kulite Semiconductor Products, Inc., Leonia, N.J.

Division of Ser. No. 596,506, Feb. 5, 1996, Pat. No. 5,614,678. This application Sep. 30, 1996, Ser. No. 723,519

Int. Cl.[6] H01L *21/00;* **B44C** *1/22*

U.S. Cl. 216—2 **6 Claims**

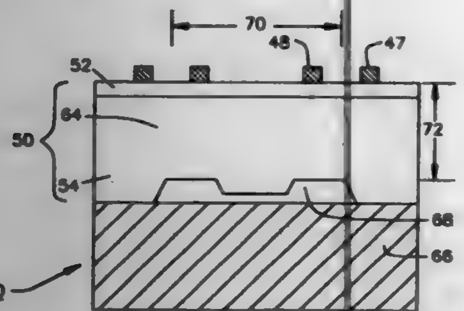

1. A method for fabricating a high pressure piezoresistive transducer comprising the steps of:

bonding a pattern wafer containing at least two sensing elements of a semiconductor material to a carrier wafer of a semiconducting material and having a dielectric isolating layer on one surface;

etching said pattern wafer to leave said piezoresistive sensing elements disposed on said dielectric layer;

forming a diaphragm member in said carrier wafer said diaphragm member having a deflecting portion and a non-deflecting portion, said deflecting portion being positioned under at least one of said at least two piezoresistive sensing elements and said non-deflecting portion being positioned under said other one of said at least two piezoresistive sensing elements;

bonding an insulating supporting member to said carrier wafer on the surface opposite to said piezoresistive sensing elements; and

forming an electrically coupled bridge arrangement such that said piezoresistive sensing element positioned over said non-deflecting portion of said diaphragm member exhibits a positive change in resistance and is connected in series with said other one of said at least two piezoresistive sensing elements which is positioned above said deflecting portion of said diaphragm member and exhibits a negative change in resistance.

5,702,620

ULTRAFINE PATTERN FORMING METHOD AND ULTRAFINE ETCHING METHOD USING CALIXARENE DERIVATIVE AS NEGATIVE RESIST

Yoshitake Ohnishi; Jun-Ichi Fujita, both of Tokyo, Japan; Arturo Arduini, Felino PR, Italy; Alessandro Casnati, Parma, Italy; Andrea Pochini, Parma, Italy, and Rocco Ungaro, Parma, Italy, assignors to NEC Corporation, Tokyo, Japan

Filed Aug. 13, 1996, Ser. No. 693,672

Claims priority, application Italy, Feb. 28, 1996, MI96A0382

Int. Cl.[6] C23F *1/00*

U.S. Cl. 216—49 **7 Claims**

1. An ultrafine pattern forming method comprising the steps of:

forming a resist film consisting of 5,11,17,23,29,35-hexachloromethyl-37,38,39,40,41,42-hexamethoxycalix[6]arene sensitive to a high-energy beam and soluble to a solvent;

having a first region of the resist film exposed to the high-energy beam, with a second region of the resist film unexposed thereto; and

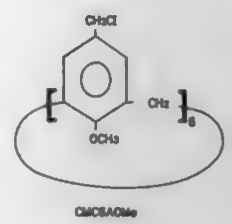

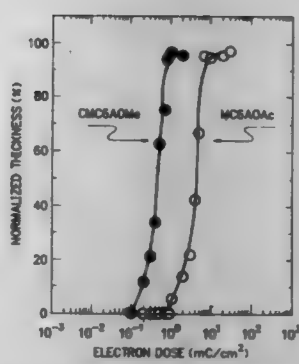

removing the second region by the solvent so that the first region is developed to define a pattern.

5,702,621

METHOD FOR THE TREATMENT OF COMMINUTED MATTER BY ELECTRICAL DISCHARGE

Jozef K. Tylko, Minneapolis, Minn., assignor to Refranco Corp., Minneapolis, Minn.

Continuation-in-part of Ser. No. 488,078, Jun. 7, 1995, abandoned, which is a continuation of Ser. No. 248,701, May 24, 1994, abandoned, which is a continuation of Ser. No. 109,606, Aug. 19, 1993, Pat. No. 5,403,991. This application Aug. 18, 1995, Ser. No. 516,793

Int. Cl.[6] B23K *10/00*

U.S. Cl. 219—121.59 **5 Claims**

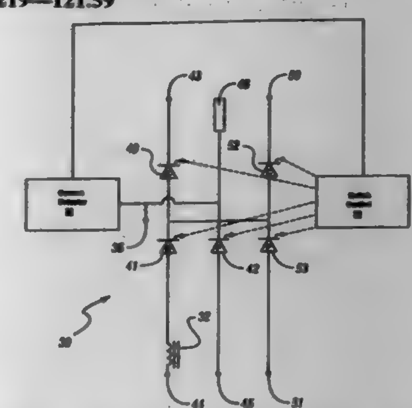

1. A method of treating comminuted matter by electrical discharge to produce a glassy product comprising the steps of:

positioning a plurality of electrode structures to define a desired inter-electrode space;

introducing comminuted matter having an inorganic content into the inter-electrode space; and

producing a plurality of discrete electrical discharges in a desired sequence between individually controlled electrode structures.

5,702,622

TERMINAL HEAD FOR PROCESSING A WORKPIECE BY MEANS OF A LASER BEAM

Peter Schubert, Gaggenau, and Hubert Adamiak, Baden-Baden, both of Germany, assignors to PRECITEX GmbH, Gaggenau-Bad Rotenfels, Germany

Filed Apr. 26, 1996, Ser. No. 637,903

Claims priority, application Germany, Apr. 28, 1995, 295 07 189 U

Int. Cl.[6] B23K *26/00*

U.S. Cl. 219—121.75 **12 Claims**

11. A terminal head for processing a workpiece with a laser beam, comprising:

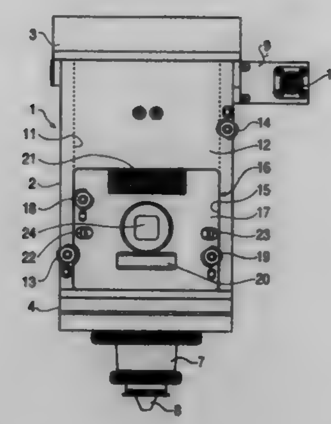

a housing;

an insert insertable laterally into the housing, said insert including a focussing optical system for focussing the laser beam; and

positioning means accessible from outside of the housing for displacing the focussing optical system relative to the insert,

wherein the insert is positioned inside of a larger opening of the housing at an axial position by means of an adapter plate which can be connected to the housing, and has at this axial position a recess which accommodates the insert in a fitted fashion.

5,702,623

HEATING APPARATUS

James Henry Sharples, Radcliffe, United Kingdom, assignor to Pifco Limited, Manchester, United Kingdom

Filed Jul. 6, 1995, Ser. No. 498,616

Claims priority, application United Kingdom, Jul. 7, 1994, 9413661

Int. Cl.[6] F27D *11/02;* **H05B** *3/82*

U.S. Cl. 219—436 **16 Claims**

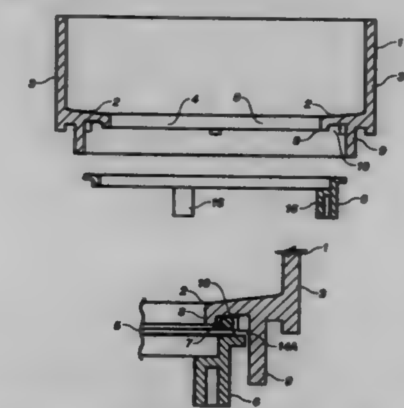

1. A method of attaching a planar electrical heating element to a vessel whereby the heating element is integrated in the body of the vessel to form a heating apparatus, the vessel defining an aperture at a position where the heating element is to be secured thereto and the heating element comprises a plate capable of covering the aperture, the method comprising the steps of:

locating a seal around the periphery of the aperture;

locating the heating element on the seal to cover the aperture;

positioning a securing member on the heating element on the opposite side thereof to the seal;

retaining the heating element and the securing member in position with the heating element in contact with the seal while compressing the seal by a predetermined amount; and

deforming the body of the vessel in a region around said aperture to retain the securing member and thereby the heating element and the seal in place with the seal under compression.

5,702,624

COMPETE HOT PLATE TEMPERATURE CONTROL SYSTEM FOR HOT TREATMENT

Ching-Wen Liao, Taipei Hsien; Chin-Chuan Kuo, Chia; Chi-Kang Peng, and Tsun-Ching Lin, both of Hsin-chu, all of Taiwan, assignors to Taiwan Semiconductors Manufacturing Company, Ltd, Hsin-Chu, Taiwan

Filed Oct. 9, 1996, Ser. No. 728,022

Int. Cl.[6] H05B *1/02*

U.S. Cl. 219—497 **6 Claims**

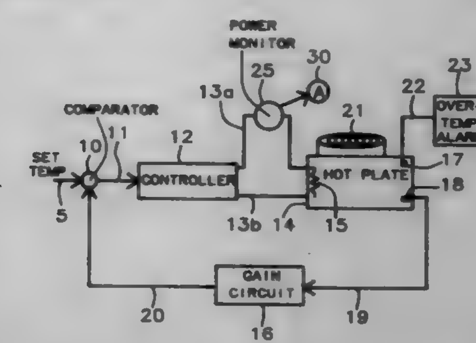

1. A heat treatment system to cure a photoresist material deposed upon a semiconductor substrate, wherein said heat treatment is to elevate said semiconductor substrate to a temperature sufficient to cure said photoresist, and wherein said system comprises

a) a heating apparatus comprising:
   a heating plate onto which said semiconductor substrate is placed,
   a heating element dispose in close proximity of said heating plate to elevate the temperature of said semiconductor substrate,
   a first temperature sensing device to provide a first electrical signal that represents the magnitude of the temperature, and
   a second temperature sensing device to provide a second electrical signal that represents the magnitude of the temperature;

b) a controlling device to selectively couple an electrical power source to the heating element, wherein the coupling of the electrical power source is determined by an error signal and said error signal will approach a null value when the temperature approaches the desired temperature;

c) a feedback gain means coupled to the first temperature sensing device to condition the first electrical signal to provide a measured temperature signal;

d) a comparing means to compare a temperature set signal that represents the desired temperature and the measured temperature signal to form the error signal;

e) an over temperature alarm means coupled to the second temperature device to monitor the second electrical signal, to provide an first audible signal and a first visual alarm if the temperature is at a level such as to cause damage to the photoresist material; and

f) a power monitoring circuit to detect the presence and absence of the electrical power source, wherein said power monitoring circuit provides a second audible signal and a second visual, signal if the electrical power source is absent.

5,702,625

ENCODER KEY INPUT DEVICE FOR A MICROWAVE OVEN AND INTERRUPT PROCESSING METHOD USING THE SAME

Kyung-Hwan Choi, Seoul, Rep. of Korea, assigner to LG Electronics Inc., Rep. of Korea

Filed Feb. 3, 1995, Ser. No. 383,403

Claims priority, application Rep. of Korea, Feb. 3, 1994, 1994-2026

Int. Cl.[6] H05B *6/68*

U.S. Cl. 219—702 **3 Claims**

1. A control system for a microwave oven comprising;

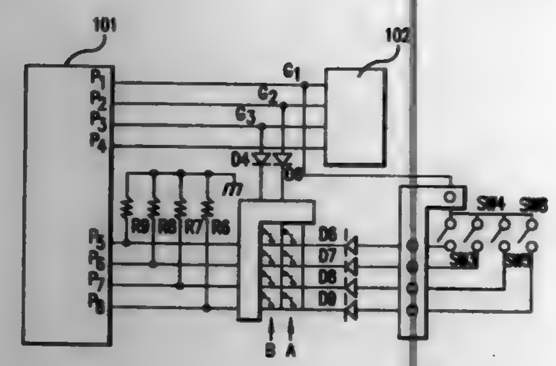

a key matrix unit including a set of matrix output ports, a first set of matrix input ports, a first set of lines parallelly connecting said first set of matrix input ports to said set of matrix output ports, a second set of matrix input ports, a second set of parallel lines connected at one end thereof to said second set of matrix input ports, each one of the lines in said second set of parallel lines having a plurality of switches for connecting its respective line in said second set to each one of said first set of parallel lines; wherein operation of each one the switches to a closed position connects a respective one of said second set of input ports via a respective one of the lines in said second set of parallel lines, the closed switch and a respective one of said first set of parallel lines to a respective one of said matrix output ports;

an encoder circuit including an encoder input port, a set of encoder output ports parallelly connected to said first set of matrix input ports, a plurality of parallel encoder lines interconnecting said encoder input port and said set of encoder output ports, and a selectively operable encoder switch in each one of the parallel encoder lines between said encoder input port and a respective one of said encoder output ports; wherein operation of each one of the encoder switches to a closed position connects said encoder input port via a respective one of the parallel encoder lines, the closed encoder switch, a respective one of said encoder output ports, a respective one of said first set of matrix input ports, a respective one of said first set of lines to a respective one of said matrix output ports;

a display unit having a set of parallel input ports for displaying current functions; and

means including a microcomputer for generating output signals to control said key matrix unit, said encoder circuit and said display unit;

said microcomputer comprising a plurality of input ports connected by parallel input lines to said matrix output ports, a plurality of output ports connected by parallel output lines to said display unit, a first one of said microcomputer output lines being additionally connected to said encoder input port, and the other microcomputer output lines each being also connected to a different one of said second set of matrix input ports.

5,702,626

AUTOMATIC COOKING CONTROLLING APPARATUS AND METHOD EMPLOYING A NARROW VIEWING ANGLE OF AN INFRARED ABSORPTIVE THERMOPILE SENSOR

Tae Yoon Kim, Kyungki-do, Rep. of Korea, assignor to LG Electronics Inc., Seoul, Rep. of Korea

Filed Dec. 6, 1995, Ser. No. 567,847

Claims priority, application Rep. of Korea, Dec. 14, 1994, 34234/1994

Int. Cl.^{6} H05B *6/68*

U.S. Cl. 219—711 **5 Claims**

1. An automatic cooking controlling apparatus for a cooker comprising:

a turntable installed within a chamber of said cooker for placing a to-be-cooked object thereon;

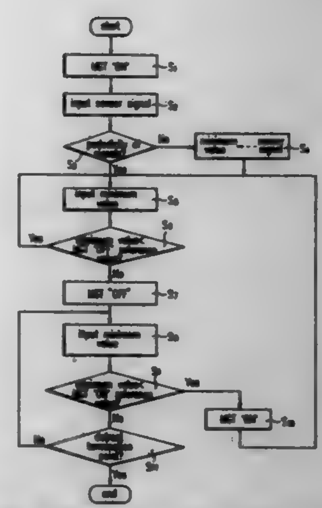

an infrared filter for filtering only the infrared wavelength bands detected from said to-be-cooked object during cooking of said to-be-cooked object;

an infrared adjusting means for adjusting a path of the wavelength filtered by said infrared filter;

a magnetron for emitting microwaves through a high-voltage circuit to heat said to-be-cooked object;

a driving motor for rotating said turntable;

an infrared absorptive thermopile sensor installed in the side of said infrared adjusting means for detecting an infrared signal reflected from said to-be-cooked object and forming a narrow viewing angle deviated from a rotation center of said turntable;

a microprocessor for processing the signal detected from said infrared sensor; and

a controller for receiving the signal processed from said microprocessor and controlling the oscillation mode of said magnetron.

5,702,627

UNINSULATED AND INSULATED CONCRETE BUILDING STRUCTURE PRODUCTION IN SITU

Walter Braskén, 615 Pleasant Bay Rd., Bellingham, Wash. 98226

Filed Mar. 27, 1995, Ser. No. 411,428

Int. Cl.^{6} E04G *11/06*

U.S. Cl. 249—33 **6 Claims**

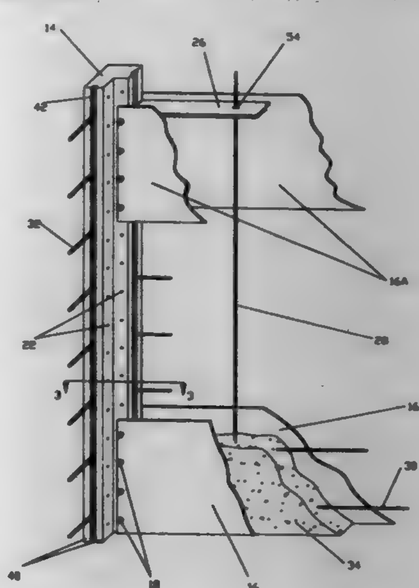

1. A concrete wall forming system comprised of:

(a) a plurality of forming panels with:

(1) each said panel generally being a rectangular flat metallic plate,

(2) each said panel having an inner flat planar forming surface,

(3) each said forming surface being directly continuous with a panel attachment device or attachment means at each lateral end of each said panel,

(4) each said panel having a plurality of strengthening ribs,

(5) said ribs being located on the panel side opposite said forming surface,

(6) said panels being utilized in matched pairs with said forming surfaces being spaced apart in opposed parallel configuration,

(b) a plurality of angle units with:

(1) said angle units being the preconstructed junctions of two or more walls of a building shell,

(2) said angle units being made of steel reinforced concrete,

(3) said angle units having a body and a plurality of legs,

(4) each said leg being a terminal segment of a building shell wall,

(5) each said leg being of sufficient dimensions to completely define the origin, height, thickness, and angular orientation of any said building shell wall,

(6) each said terminal segment having an angle unit attachment means,

(c) two said angle units and two said matched forming panels in a combined assembly producing a forming void for the placement of steel reinforcement and freshly mixed concrete with:

(1) each said angle unit having one said terminal segment inserted between the lateral ends of each said panel pair,

(2) said panel attachment means and said inserted segment attachment means being a mutually interactive combined attachment means with said combined attachment means being secured by a plurality of retainers,

(3) said combined attachment means providing a means of maintaining the integrity, continuity, and all alignment of said forming void,

(4) said void being generally rectangular in shape in horizontal cross section with a plurality of boundaries,

(5) two said void boundaries being said opposed forming surfaces,

(6) two other said void boundaries being two said terminal segments,

(7) said forming void length being predetermined by said forming panel lengths,

(8) said forming void width being predetermined by said terminal segment leg width,

(9) said panels and said panel ribs in combination providing a means for the transferral of all vertical, lateral, and horizontal displacement forces exerted on said panels to said combined attachment means,

(10) said combined attachment means being located entirely outside of said forming void, and

(d) said panels and said units in a plurality of combined assemblies creating a plurality of forming wilds for the placement of steel reinforcement and freshly mixed concrete for the walls of an entire structural shell with said angle units being incorporated into said building shell.

5,702,628

METHOD OF FABRICATING ARTICLE BY USING NON-SAND CORE AND ARTICLE PRODUCED THEREBY, AND CORE STRUCTURE

Masaru Nemoto, 1867-1 Showacho, Isesaki-city, Gunma-prefecture 372, Japan

Filed Jul. 28, 1993, Ser. No. 102,974

Claims priority, application Japan, Jul. 30, 1992, 4-064213 U; Aug. 3, 1992, 4-248503; Nov. 26, 1992, 4-339735; Feb. 12, 1993, 5-047247; Feb. 12, 1993, 5-047248; Apr. 12, 1993, 5-108857

Int. Cl.^{6} B28B *7/34;* **B22C** *9/10*

U.S. Cl. 249—61 **3 Claims**

1. A core assembly in a fabrication mold for fabrication of an article from a flowable material which is flowable at a high

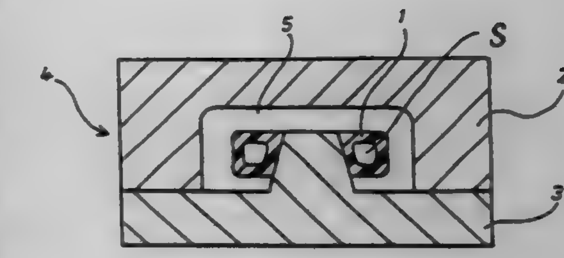

temperature, the article having at least one of a hollow section and an undercut section, said core assembly comprising a core formed of a non-sand material and configured to define at least part of the at least one of the hollow section and the undercut section of the article, means defining a fluid flow passage formed in said core, and a continuously flowing fluid contained in said fluid flow passage for cooling said core during fabrication of the article, wherein said non-sand material is fibrous material and said fibrous material is selected from the group consisting of paper, synthetic paper, non-woven fabric, and fibers.

5,702,629

PIEZOELECTRIC CERAMIC-POLYMER COMPOSITES

Changxing Cui, Bethesda; Ray H. Baughman, Morris Plains; Zafar Iqbal, Morristown; Theodore R. Kazmar, Santa Clarita, and David K. Dahlstrom, Panorma, all of Calif., assignors to AlliedSignal Inc., Morristown, N.J.

Filed Mar. 21, 1996, Ser. No. 618,690

Int. Cl.^{6} H01L *41/18;41/157;41/193*

U.S. Cl. 252—62.9 R **27 Claims**

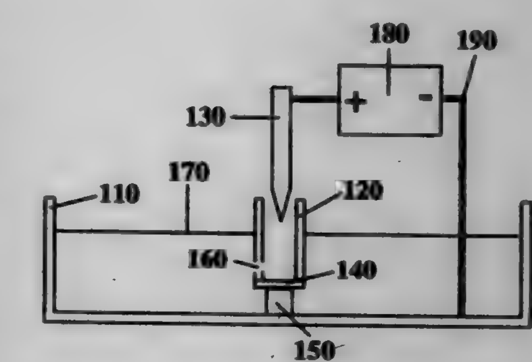

1. A piezoelectric composite comprising a mixture of piezoelectric ceramic particles in a polymeric material, which polymeric material is continuous in three dimensions, wherein

(a) the weight-average diameter D of the piezoelectric ceramic particles ranges from 30 microns to 200 microns,

(b) at least 50 weight percent of the piezoelectric ceramic particles have an average diameter that is in the range from 0.5 D to 1.5 D,

(c) the dielectric constant of the piezoelectric ceramic particles at one kHz is less than about 700,

(d) the dielectric constant of the polymeric material at one kHz is above 2.8,

(e) the dielectric loss of the polymeric material at one kHz is less than 0.02, and

(f) the volume fraction of the piezoelectric ceramic in the composite is from 40% to 74%.

5,702,630

FLUID HAVING BOTH MAGNETIC AND ELECTRORHEOLOGICAL CHARACTERISTICS

Makoto Sasaki, and Hisatake Sato, both of Yokohama, Japan, assignors to Nippon Oil Company, Ltd., Tokyo, Japan

Continuation of Ser. No. 433,196, May 2, 1995, abandoned, which is a continuation-in-part of Ser. No. 90,276, Jul. 13, 1993, abandoned. This application Mar. 19, 1997, Ser. No. 821,570

Claims priority, application Japan, Jul. 16, 1992, 4-210655

Int. Cl.^{6} H01F *1/44*

U.S. Cl. 252—62.52 **4 Claims**

1. A fluid having both magnetic and electrorheological characteristics, consisting essentially of an insulating liquid having stably dispersed therein ferromagnetic particles of manganese ferrite, barium ferrite, iron, nickel, permalloy or iron nitride, having a particle size of 0.003 to 200 μm and coated with a metallic oxide, said metallic oxide having been prepared by a sol-gel reaction of 2–98 wt % of a metal alkoxide in the presence of 98–2 wt % of the ferromagnetic particles.

5,702,631

AQUEOUS CORROSION INHIBITOR FORMULATIONS

John J. Conville, Canton; Robert Chwalik, Farmington Hills; Shrikant V. Desai, Stout Grosse Ile; David E. Turcotte, Woodhaven, and James T. Lyon, Novi, all of Mich., assignors to Ashland Inc., Lexington, Ky.

Continuation of Ser. No. 221,978, Apr. 4, 1994, abandoned, which is a continuation of Ser. No. 980,858, Nov. 24, 1992, abandoned. This application Jun. 7, 1995, Ser. No. 477,413

Int. Cl.^{6} C09K *5/00*

U.S. Cl. 252—76 **51 Claims**

1. An aqueous concentrated corrosion inhibitor solution for addition to glycol-based automotive antifreeze/coolant compositions having depleted corrosion-inhibiting characteristics, said solution consisting essentially of a corrosion inhibiting effective amount of:

a polymeric polycarboxylate which is at least one selected from the group consisting of (i) a secondary alcohol modified polyacrylic acid, and (ii) a sodium salt of a copolymer of acrylic acid and maleic acid;

a nitrate salt selected from sodium nitrate, potassium nitrate, magnesium nitrate, calcium nitrate and/or lithium nitrate;

an azole compound selected from sodium mercaptobenzothiazole and sodium tolytriazole;

a silicate compound;

a transition metal compound selected from disodium salt dihydrate of molybdic acid, sodium molybdate·$2H_2O$, molybdenum trioxide, silicoheteropolymolybdates and/or phosphoroheteropolymolybdates; and

a phosphate salt.

5,702,632

NON-CFC REFRIGERANT MIXTURE

Chuan Weng, Asheville, N.C., assignor to General Signal Corporation, Stamford, Conn.

Continuation of Ser. No. 380,353, Jan. 30, 1995, abandoned, which is a continuation of Ser. No. 201,696, Feb. 25, 1994, Pat. No. 5,408,848. This application Aug. 26, 1996, Ser. No. 697,477

Int. Cl.^{6} C09K *5/04*

U.S. Cl. 252—67 **2 Claims**

1. A refrigerant mixture for use in a refrigeration system capable of providing temperatures as low as about −150° C. consisting of:

1-chloro-1,1-difluoroethane;

1,1,1,2-tetrafluoroethane;

a trifluoromethane;

a carbon tetrafluoride; and

argon.

5,702,633

Patent Not Issued For This Number

5,702,634

AQUEOUS SYSTEM CONTAINING A SYNERGISTIC COMBINATION INCLUDING POLYETHER POLYAMINO METHYLENE PHOSPHATES FOR CONTROLLING CALCIUM CARBONATE AND CALCIUM PHOSPHATE SCALE

Jasbir S. Gill, McKees Rocks, Pa., assignor to Calgon Corporation, Pittsburgh, Pa.

Filed Oct. 6, 1995, Ser. No. 540,271

Int. Cl.^{6} C02F *5/10*

U.S. Cl. 252—180 **16 Claims**

1. An aqueous system containing scale forming salts and wherein the pH of said system is at least 8.5 and the calcite saturation level of said system is at least 100 times the solubility limit of calcium as calcite, which further contains a synergistic effective amount of a combination comprising: (A) a polyether polyamino methylene phosphonate of the formula:

$$\begin{array}{c} M_2O_3P-H_2C \quad\quad R \quad\quad\quad\quad\quad\quad\quad\quad R \quad\quad CH_2PO_3M_2 \\ N-CH-CH_2(OCH_2-CH)_nN \\ M_2O_3P-H_2C \quad\quad\quad\quad\quad\quad\quad\quad\quad\quad\quad\quad\quad\quad CH_2PO_3M_2 \end{array}$$

where n is, or on average is, from about 2 to about 12, inclusive; M is hydrogen or a cation of an alkali metal salt; and each R may be the same or different and is independently selected from hydrogen and methyl; and (B) a terpolymer comprising the monomers of acrylic acid, sulfophenomethallyl ether and maleic acid, wherein the weight average molecular weight for said terpolymer is in the range from about 4,000 to 10,000.

5,702,635

GRANULAR LAUNDRY BLEACHING COMPOSITION

Marina Trani, and Carlo Ricci, both of Rome, Italy, assignors to The Procter & Gamble Company, Cincinnati, Ohio

PCT No. PCT/US94/10135, § 371 Date Mar. 5, 1996, § 102(e) Date Mar. 5, 1996, PCT Pub. No. WO95/08509, PCT Pub. Date Mar. 30, 1995

PCT Filed Sep. 13, 1994, Ser. No. 605,123

Claims priority, application European Pat. Off., Sep. 21, 1993, 93202722

Int. Cl.^{6} C01B *15/043;15/10;31/24;* **C11D** *3/39*

U.S. Cl. 252—186.27 **19 Claims**

1. A stable particulate bleaching composition comprising particles of alkali metal salt of percarbonate bleach or mixtures of said particles of percarbonate bleach, wherein said particles of percarbonate bleach are coated with and/or agglomerated with a stabilizing effective amount of a hydrophobic ester of citric acid or mixtures of said hydrophobic esters of citric acid.

5,702,636

GEL-GLASS DISPERSED LIQUID CRYSTALS

Wha-Tzong Whang, Hsinchu, Taiwan, assignor to National Science Council, Taipei, Taiwan

Filed Sep. 20, 1995, Ser. No. 530,895

Int. Cl.^{6} C09K *19/52*

U.S. Cl. 252—299.01 **27 Claims**

1. A gel-glass dispersed liquid crystal, which is prepared from the components of:

(a) 0–30 wt % of a four functionally substituted silane selected from the group consisting of $Si(OR^1)_4$ and $Si(OOCR^2)_4$;

(b) 0–60 wt % of a three functionally substituted silane selected from the group consisting of $R^3Si(OR^1)_3$ and $R^3Si(OOCR^2)_3$;

(c) 3–70 wt % of a two functionally substituted silane selected from the group consisting of $R^4R^5Si(OR^1)_2$ and $R^4R^5Si(OOCR^2)_2$;

(d) 0–30 wt % of a metal alkoxide $(R^6)_mM(OR^7)_n$;

(e) 10–80 wt % of a liquid crystal; and

(f) 0–30 wt % of additives;

wherein

each of R^1, R^2 and R^7 is an aliphatic group having not more than 7 carbon atoms,

each of R^3, R^4, R^5 and R^6 is selected from the group consisting of an aliphatic group, aromatic group, substituted aliphatic group, substituted aromatic group, polymer moiety and substituted polymer moiety,

wherein

each of the aliphatic group, aromatic group, substituted aliphatic group and substituted aromatic group has not more than 24 carbon atoms,

each of the polymer moiety and substituted polymer moiety has a molecular weight of not more than 10,000,

the substituted group contained in the substituted aliphatic group, substituted aromatic group and substituted polymer moiety is an amino group or a reactive functional group, which is capable of undergoing hydrolysis and condensation or is capable of forming a linkage at room temperature, at an elevated temperature or upon exposure to light, and

wherein

M is a metal atom, wherein the refractive index of the oxide of the metal atom is not less than 1.52 when measured at 589 nm,

m is an integer between 0 and 4,

n is an integer between 2 and 6, and

the additives lower the operation voltage of the glass dispersed liquid crystal or enhance the on-state transmittance of the gel-glass dispersed liquid crystal.

5,702,637

LIQUID CRYSTAL COMPOUNDS HAVING A CHIRAL FLUORINATED TERMINAL PORTION

Gilbert C. Johnson, Lino Lakes; Marc D. Radcliffe, Woodbury; Patricia M. Savu, Maplewood; Daniel C. Snustad, Woodbury, and Terence D. Spawn, West Lakeland Township, Washington County, all of Minn., assignors to Minnesota Mining and Manufacturing Company, St. Paul, Minn.

Filed Apr. 19, 1995, Ser. No. 424,892

Int. Cl.^{6} C09K *19/34;19/32;* **C07C** *25/13;* **C07D** *239/02*

U.S. Cl. 252—299.61 **2 Claims**

1. Fluorine-containing, chiral liquid crystal compounds that have smectic mesophases or latent smectic mesophases and that are represented by the general formula (I):

$$\begin{array}{c} R-(\underset{\displaystyle X_l}{\underset{|}{M}})_a-A\!\left(\underset{\displaystyle Y_m}{\underset{|}{N}}\right)_{\!b}B\!\left(\underset{\displaystyle Z_n}{\underset{|}{P}}\right)_{\!c}D-R_f \end{array} \quad (I)$$

where M, N, and P are each independently selected from the group consisting of

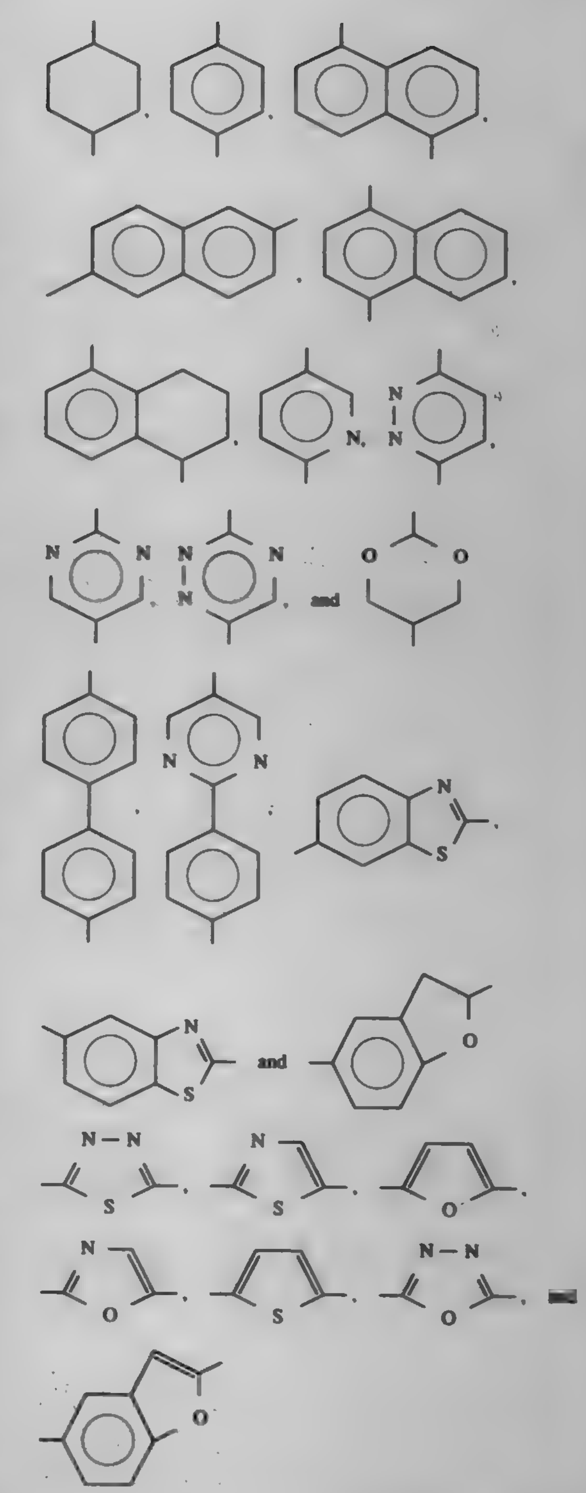

a, b, and c are each independently zero or an integer of from 1 to 3, with the proviso that the sum of a+b+c be at least 1;

each A and B are non-directionally and independently selected from the group consisting of a covalent bond,

—C(=O)—O—, —C(=O)—S—, —C(=O)—Se—,

—C(=O)—Te—, $—(CH_2CH_2)_k$

where

K is 1 to 4,

—CH=CH—, —C≡C—, —CH=N—, $—CH_2—O—$,
—C(=O)—, and —O—;

each X, Y, and Z are independently selected from the group consisting of —H, —Cl, —F, —Br, —I, —OH, —OCH_3, —CH_3, —CF_3, —OCF_3, —CN, and —NO_2;
each l, m, and n are independently zero or an integer of 1 to 4;
D is non-directionally selected from the group consisting of a covalent bond,

$-C(=O)-O-C_rH_{2r}-$, $-O-C_rH_{2r}-$

$-O-(O=)C-C_rH_{2r}-$, $-C\equiv C-$,

$-CH=CH-$, $-C(=O)-$,

$-O\text{+}C_sH_{2s}O\text{+}_t C_{r'}H_{2r'}-$, $-C_rH_{2r}-$,

$\text{+}C_sH_{2s}O\text{+}_t C_{r'}H_{2r'}-$, $-O-$, $-S-$,

$-OSO_2-$, $-SO_2-$, $-SO_2-C_rH_{2r}-$

$-C_rH_{2r}-N(C_pH_{2p+1})-SO_2-$, $-N(C_pH_{2p+1})-$,

$-C_rH_{2r}-N(C_pH_{2p+1})-C(=O)-$, $-CH=N-$,

and combinations thereof, where
r and r' are independently integers of 0 to about 20, s is independently an integer of 1 to about 10 for each $(C_sH_{2s}O)$, t is an integer of 1 to about 6, and p is an integer of 0 to about 4;
R is selected from the group consisting of

$-O-((C_{q'}H_{2q'-v}-(R')_v)-O)_w-C_qH_{2q+1-v'}-(R')_{v'}$;

$-((C_{q'}H_{2q'-v}-(R')_v)-O)_w-C_qH_{2q+1-v'}-(R')_{v'}$

$-C(=O)-O-C_qH_{2q+1-v'}-(R')_{v'}$

$-O-(O=)C-C_qH_{2q+1-v'}-(R')_{v'}$

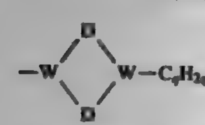

$-W(D)_2W-C_qH_{2q+1-v'}-(R')_{v'}$ and

$-CR'H-(D)_g-CR'H-C_qH_{2q+1-v'}-(R')_{v'}$

where each R' is independently selected from the group consisting of —Cl, —F, —CF_3, —NO_2, —CN, —H, —C_qH_{2q+1}, —O—(O═)C—C_qH_{2q+1}, —C(═O)—O—C_qH_{2q+1}, —Br, —OH, and —OC_qH_{2q+1};
q' is independently an integer of 1 to about 20 for each $(C_qH_{2q'}—O)$; q is an integer of 1 to about 20; w is an integer of 0 to about 10; v is an integer of 0 to about 6; each v' is independently an integer of 0 to about 6; g is an integer of 1 to about 3; each D is independently and non-directionally selected from the group set forth for D above, with the proviso that the ring containing D has from about 3 to about 10 ring atoms; each W is independently selected from the group consisting of N, CR', and SiR'; and R is chiral or achiral; and
R_f' is —R*—D—$(O)_x$—CH_2—D'—R_f, where R* is a cyclic or acyclic chiral moiety selected from the group consisting of

$-O-((C_{q'}H_{2q'-v}-(R')_v)-O)_w-C_qH_{2q-v}-(R')_v-$,

$-((C_{q'}H_{2q'-v}-(R')_v)-O)_w-C_qH_{2q-v}-(R')_v-$,

$-C(=O)-O-C_qH_{2q-v}-(R')_v-$,

$-O-(O=)C-C_qH_{2q-v}-(R')_v-$,

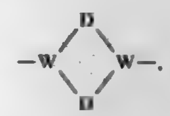

$-W(D)_2W-$, and $-CR'H-(D)_g-CR'H-$,

where each R' is — F; q' is independently an integer of 1 to about 20 for each $(C_qH_{2q'}—O)$; q is an integer of 1 to about 20; w is an integer of 0 to about 10; v is an integer of 1 to about 3; each v' is independently an integer of 0 to about 6; g is an integer of 1 to about 3; each D is independently and non-directionally selected from the group set forth for D above, with the proviso that the ring containing D has from about 3 to about 10 ring atoms; each W is independently selected from the group consisting of N and CH; and with the proviso that R* is chiral; D and D' are each independently and non-directionally selected from the group set forth for D above; x is an integer of 0 or 1; and R_f is fluoroalkyl, perfluoroalkyl, fluoroether, or perfluoroether.

5,702,638
PHENANTHRIDINE DERIVATIVES, AND THEIR USE IN LIQUID-CRYSTALLINE MIXTURES

Rainer Wingen, Hattersheim, and Barbara Hornung, Hasselroth, both of Germany, assignors to Hoechst Aktiengesellschaft, Frankfurt, Germany

PCT No. PCT/EP95/00312, § 371 Date Jul. 17, 1996, § 102(e) Date Jul. 17, 1996, PCT Pub. No. WO95/21227, PCT Pub. Date Aug. 10, 1995
PCT Filed Jan. 30, 1995, Ser. No. 676,301
Int. Cl.^{6} C09K *19/32;* **C07D** *221/12;* **G02F** *1/13*
U.S. Cl. 252—299.62 **6 Claims**

1. A ferroelectric liquid-crystal mixture containing one or more phenanthridine derivatives of the formula (I)

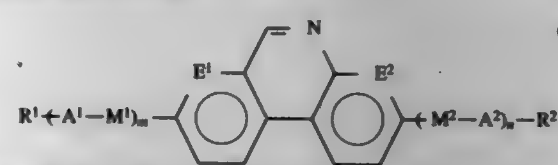

(I)

in which the symbols and indices have the following meanings:
E^1 and E^2 are identical or different and are —CF— or —CH—;
R^1 and R^2 are identical or different and are a straight-chain or branched alkyl radical having 1 to 20 carbon atoms (with or without an asymmetrical carbon atom), where one or more —CH_2— groups may also be replaced by —O—, cyclopropane-1,2-diyl or —$Si(CH_3)_2$— with the proviso that oxygen atoms must not be bonded directly to one another, and where one or more hydrogen atoms of the alkyl radical may also be replaced by fluorine; and m and n are zero.

5,702,639
USE OF COMPLEX LIGANDS FOR IONS IN FERROELECTRIC LIQUID-CRYSTAL MIXTURES

Claus Escher, Mühltal, Germany; Takamasa Harada, Saitama, Japan; Gerhard Illian; Norbert Rösch, both of Frankfurt am Main, Germany, and Rainer Wingen, Hattersheim am Main, Germany, assignors to Hoechst Aktiengesellschaft, Frankfurt, Germany

Continuation of Ser. No. 310,926, Sep. 22, 1994, abandoned, which is a continuation of Ser. No. 852,253, Jun. 1, 1992, abandoned. This application May 31, 1995, Ser. No. 455,668
Claims priority, application Germany, Dec. 1, 1989, 39 39 697.5; Apr. 12, 1990, 40 11 803.7
Int. Cl.^{6} C09K *19/52;19/58;19/34;* **G02F** *1/13*
U.S. Cl. 252—299 **20 Claims**

1. A ferroelectric liquid-crystal mixture comprising at least two components, wherein one component is at least one electrically

neutral complex ligand for cations comprising at least two donor atoms which are nitrogen, nitrogen and oxygen, nitrogen and sulfur, sulfur or sulfur and oxygen.

5,702,640
HIGH-MULTIPLEXED SUPERTWIST LIQUID-CRYSTAL DISPLAY

Michael Junge, Pfungstadt, and Volker Reiffenrath, Rossdorf, both of Germany, assignors to Merck Patent Gesellschaft Mit Beschrankter Haftung, Darmstadt, Germany

Continuation of Ser. No. 346,925, Nov. 23, 1994, abandoned. This application Feb. 27, 1996, Ser. No. 607,446
Claims priority, application European Pat. Off., Nov. 25, 1993, 93118971
Int. Cl.^{6} C09K *19/52;* **G02F** *1/1333*
U.S. Cl. 252—299.01 **18 Claims**

1. A high-multiplexed supertwist liquid-crystal display containing
two plane-parallel outer plates which, together with a frame, form a cell,
a nematic liquid-crystal mixture of positive dielectric anisotropy which is present in the cell,
electrode layers with superposed alignment layers on the insides of the outer plates which address each pixel by orthogonal row wave forms.
pre-tilt angle between the longitudinal axis of the molecules at the surface of the outer plates and the outer plates of from about 1 degree to 30 degrees, and
a twist angle of the liquid-crystal mixture in the cell from alignment layer to alignment layer with a value of between 100° and 600°,
wherein the nematic liquid-crystal mixture consists essentially of
a) 15–50% by weight of a liquid-crystalline component A, which is one or more two- or there-ringed compounds having a dielectric anisotropy of more than +1.5;
b) 0–25% by weight of a liquid-crystalline component B, which is one or more two- or three-ringed compounds having a dielectric anisotropy form -1.5 to +1.5;
c) 40–80% by weight of a liquid-crystalline component T, which is three or more compounds having a tolan-4,4'-diyl structure element, and
d) an optically active component D in such an amount that the ratio between the layer thickness (separation of the plane-parallel outer plates) and the natural pitch of the chiral nematic liquid-crystal mixture is from about 0.2 to 1.3,
wherein the nematic liquid crystal mixture has a nematic phase range of at least 60° C., a viscosity of not more than 25 mPas, a birefringence of at least 0.1950 and a dielectric anisotropy of at least +1, the dielectric anisotropies of the compounds and the parameters based on the nematic liquid-crystal mixture being based on a temperature of 20° C.,
and wherein component T comprises at least three compounds of formula I

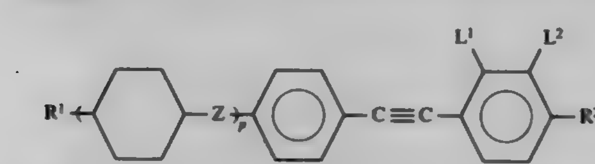

I

in which
R^1 is alkyl, alkoxy, alkenyl or alkenyloxy with 1 to 8 C atoms,
L^1 and L^2 are each independently H or F,
R^2 is F, OCF_3, alkyl or alkoxy with 1 to 8 C atoms,
Z is a single bond, and
p is 0 or 1.

5,702,641
LIQUID CRYSTALLINE COMPOUND CONTAINING FLUORINE ATOM SUBSTITUTED ALKYL GROUP(S) AND A LIQUID CRYSTAL COMPOSITION

Yasuhiro Haseba; Kazutoshi Miyazawa; Shuichi Matsui; Tomoyuki Kondo; Yasuyuki Goto; Etsuo Nakagawa, and Shinichi Sawada, all of Chiba-ken, Japan, assignors to Chisso Corporation, Osaka, Japan

Filed Dec. 21, 1995, Ser. No. 576,461
Claims priority, application Japan, Dec. 22, 1994, 6-320218
Int. Cl.^{6} C09K *19/30;19/52;* **G02F** *1/13*
U.S. Cl. 252—299.63 **20 Claims**

1. A liquid crystalline compound expressed by the formula (I):

$$F-(CH_2)n-E-(CH_2CH_2)_k-G-(CH_2CH_2)_m-L-(CH_2CH_2)_m-Z-Q-Y \quad (I)$$

wherein n represents an integer of 1 to 10; k, l and m each independently represent an integer of 0 to 2; E represents 1,4-cyclohexylene group or 1,4-phenylene group wherein one or more hydrogen atoms on a six-membered ring may be replaced by fluorine atom(s); G and L each independently represent a covalent bond or 1,4-cyclohexylene group or 1,4-phenylene group wherein one or more hydrogen atoms may be replaced by fluorine atom(s), provided that when only one of G or L is a covalent bond, G is the covalent bond; Z represents 1,4-phenylene group wherein one or more hydrogen atoms on the 1,4-phenylene group may be replaced by fluorine atom(s); Q represents a covalent bond or —O—; Y represents a fluoroalkyl group of 1 to 3 carbon atoms or fluorine atom; and when E represents 1,4-cyclohexylene group and at least one of G and L represents a covalent bond, k+l+m≠0 and when Q represents —O—, Y does not represent fluorine atom.

5,702,642
POLYMERIC COMPOUNDS, AND LIQUID CRYSTAL ELEMENT USING THE SAME

Nobuaki Yamada, Higashiosaka; Shuichi Kozaki, Nara; Hoyo Mizobe, Soka; Masahiko Yoshida, Soka, and Kenji Suzuki, Soka, all of Japan, assignors to Sharp Kabushiki Kaisha, Osaka, and Kanto Kagaku Kabushiki Kaisha, Tokyo, both of Japan

Continuation of Ser. No. 466,042, Jun. 6, 1995. This application Feb. 11, 1997, Ser. No. 797,348
Claims priority, application Japan, Jun. 14, 1994, 6-132288
Int. Cl.^{6} C09K *19/12;* **G02F** *1/1333;* **C08F** *20/30*
U.S. Cl. 252—299.66 **7 Claims**

1. A polymeric compound represented by the following general formula (I):

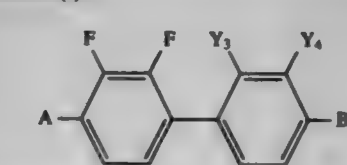

(I)

wherein A represents

$$CH_2=C(X_1)-COO\text{+}CH_2\text{+}_m\text{+}O\text{+}$$

B represents

$$CH_2=C(X_2)-COO\text{+}CH_2\text{+}_n\text{+}O\text{+}$$

each of X_1 and X_2 represents independently a hydrogen atom or a methyl group, each of m and n represents independently an integer of 0 to 14, and each of Y_3 and Y_4 represents independently a hydrogen atom or a fluorine atom.

5,702,643

ZNS:CU ELECTROLUMINESCENT PHOSPHOR AND METHOD OF MAKING SAME

Vaddi Butchi Reddy, Sayre, and Kenneth T. Reilly, Towanda, both of Pa., assignors to Osram Sylvania Inc., Danvers, Mass.

Filed Apr. 24, 1996, Ser. No. 637,146

Int. Cl.[6] C09K *11/54;11/56*

U.S. Cl. 252—301.65 **24 Claims**

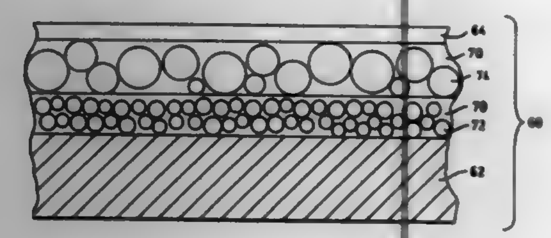

1. An electroluminescent phosphor having the general formula ZnS:Cu,Cl,Au, a halflife of at least about 900 hours, and x and y color coordinates where the x color coordinate is from about 0.156 to about 0.196 and the y color coordinate is from about 0.370 to about 0.430.

5,702,644

PITCH CONTROL COMPOSITION

Linda M. Hlivka, Flemington, and George K. Wai, Mountain Lakes, both of N.J., assignors to Ashland Inc., Columbus, Ohio

Filed Jan. 11, 1996, Ser. No. 584,967

Int. Cl.[6] B01F *17/18;17/52;* **C02F** *5/12*

U.S. Cl. 252—356 **4 Claims**

1. A liquid composition for the control of pitch deposition in acid pulp and paper making comprising in aqueous solution:

(a) a derivatized cationic guar having a hydroxypropyl trimonium group wherein the charge density of the derivatized cationic guar is from 0.01 meq/g to 3.0 meq/g.; and

(b) an alkali metal polyacrylate dispersant wherein the average molecular weight of the sodium polymethacrylate dispersant is from 10,000 to 50,000,

where the amount of derivatized cationic guar in the composition is from 1–20% by weight based upon the weight of the stabilized aqueous solution and the amount of alkali metal polyacrylate in the composition is from 1–20% by weight based upon the weight of the stabilized aqueous solution.

5,702,645

PHOTOCHROMIC CHROMENE DERIVATIVES

Frank J. Hughes, Edina, Minn., assignor to Vision-Ease Lens, Inc., Brooklyn Center, Minn.

Filed Oct. 30, 1995, Ser. No. 550,033

Int. Cl.[6] C07D *493/04*

U.S. Cl. 252—586 **20 Claims**

1. A photochromic compound, or a structural isomer of the photochromic compound, the photochromic compound represented by the formula:

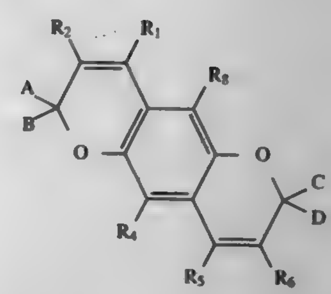

wherein R_1, R_2, R_4, R_5, R_6, R_8, A, B, C, and D are each individually selected from the group consisting of hydrogen, alkyl, alkoxy, phenyl, naphthyl, cycloalkyl, furyl, alkoyl, alkoyloxy, aroyl, aroyloxy, halogen, amino, dialkyl amino, nitro, morpholino, piperidino, and piperazino, provided that at least one of A, B, C, or D is selected from the group consisting of alkoxy, phenyl, naphthyl, cycloalkyl, furyl, alkoyl, alkoyloxy, aroyl, aroyloxy, halogen, amino, dialkyl amino, nitro, morpholino, piperidino, and piperazino.

5,702,646

MIXING HEAD FOR MIXING FLUIDS, IN PARTICULAR GASES AND/OR LIQUIDS

Mark Braendli, Asplistrasse 26, CH-5016 Erlinsbach, Switzerland

PCT No. PCT/CH95/00111, § 371 Date Apr. 18, 1996, § 102(e) Date Apr. 18, 1996, PCT Pub. No. WO95/32794, PCT Pub. Date Dec. 7, 1995

PCT Filed May 18, 1995, Ser. No. 596,107

Claims priority, application Switzerland, May 31, 1994, 1700/94

Int. Cl.[6] B01F *3/04*

U.S. Cl. 261—89 **13 Claims**

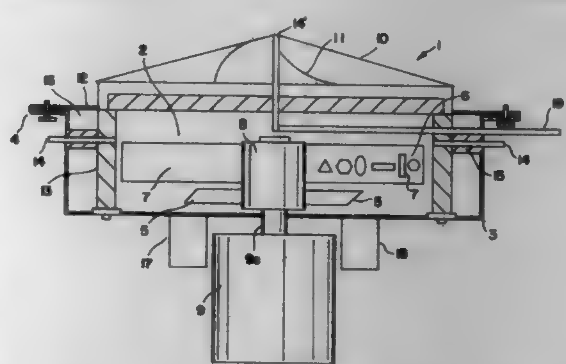

1. A mixing head to be mounted on a utilization system and operable to mix media and to then supply the thus mixed media to the utilization system, said mixing head comprising:

a housing having a media inlet end and a media outlet end, said media outlet end having an annular flange to enable said housing to be mounted on the utilization system;

a rotor mounted within said housing for rotation about an axis extending in an axial direction from said inlet end toward said outlet end, said rotor comprising an upstream axial flow impeller and a downstream radial flow impeller, relative to a direction of media flow from said inlet end to said outlet end, each said impeller including plural rigid and fixed blades, whereby said rotor achieves intense swirling mixing of the media within said housing;

said housing having at said outlet end thereof an outlet in the form of an annular gap for supply of the mixed media into the utilization system; and

a deflection hood mounted at said outlet end of said housing with said annular gap being outwardly of said hood, said hood having an outer surface directed away from said housing, said outer surface having a convex hemispherical or conical shape.

5,702,647

MULTIPLE DOWNCOMER HIGH PERFORMANCE TRAY ASSEMBLY

Adam T. Lee, Richardson; Kuang Wu, Plano, and Larry Burton, De Soto, all of Tex., assignors to Koch Enterprises, Inc., Wichita, Kans.

Continuation of Ser. No. 414,615, Mar. 31, 1995, abandoned. This application Mar. 26, 1997, Ser. No. 816,197

Int. Cl.[6] B01F *3/04*

U.S. Cl. 261—114.5 **23 Claims**

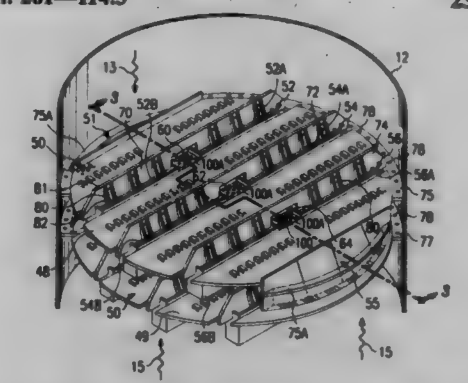

1. A multiple downcomer-tray assembly for a vapor-liquid contact chemical process column of the type wherein said trays are formed with active regions thereon for the ascending flow of vapor therethrough and wherein liquid is directed to flow upon a first tray and downwardly therefrom through a first series of downcomers disposed therein onto a second tray and across active regions thereof between individual ones of a second series of downcomers disposed therein, said assembly further comprising:

a plurality of support baffles secured to said column and extending along certain ones of said downcomers for the support thereof;

a plurality of mounting members securing said downcomers to said support baffles;

at least two downcomers being disposed in spaced, end to end relationship within one of said trays; and

an active tray bridge section being disposed between said ends of said end to end downcomers for permitting liquid flow thereacross and ascending vapor flow therethrough.

5,702,648

SELF-CONTAINED ROOM AIR HUMIDIFIER

Kenneth P. White, Burlington, N.C., and David B. White, Lewisberry, Pa., assignors to Morgan & White Ltd., PA Corp., Lewisberry

Filed Feb. 16, 1996, Ser. No. 602,582

Int. Cl.[6] B01F *3/04*

U.S. Cl. 261—142 **9 Claims**

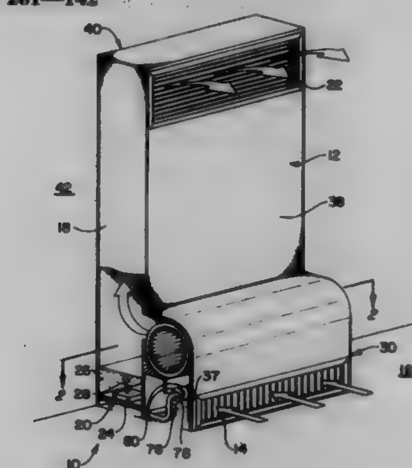

1. A self-contained room air humidifier for completely evaporating a water mist in air drawn from a primary room environment prior to discharge back into the primary room environment, said self-contained room air humidifier comprising:

a housing having an inlet for receiving air from the primary room environment and an outlet for discharging humidified air back into the primary room environment;

a mist generator including a water reservoir, said mist generator being disposed in said housing for producing a mist to humidify air received through the inlet from the primary room environment; and

a fan for moving air past the mist generator;

said housing enclosing an evaporation chamber extending from the mist generator to the outlet for transport of the air and mist, said evaporation chamber being dimensioned such that the mist is completely evaporated in the air prior to discharge back into the primary room environment, wherein the evaporation chamber is elongated and at least seven feet long.

5,702,649

PROCESS AND APPARATUS FOR PRODUCING CONTOURED MOLDED MIRRORS WITH IMPROVED OPTICAL PROPERTIES

Christopher D. Taylor, Redondo Beach, Calif., assignor to Hughes Aircraft Company, Los Angeles, Calif.

Filed Mar. 10, 1995, Ser. No. 402,293

Int. Cl.[6] B29D *11/00*

U.S. Cl. 264—1.9 **17 Claims**

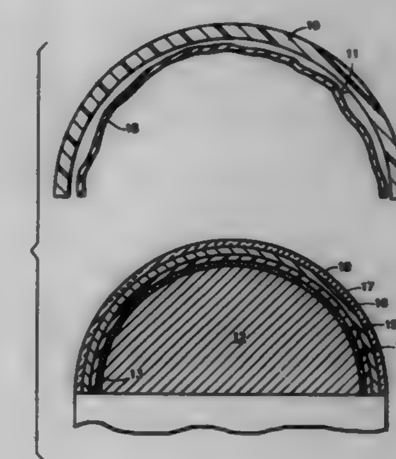

1. Process for producing a mirror having a molded plastic substrate having a contoured surface supporting a reflective layer having highly precise optical reflectance properties, comprising the steps of:

(a) molding a plastic substrate having a contoured surface approximating the desired contour of a reflective layer to be applied thereto;

(b) providing a master pattern having a contoured surface which is machined or otherwise worked to form a precision surface for supporting a reflective layer having highly precise reflectance properties, the contoured surface of the master pattern being complimentary to the contoured surface of the molded plastic substrate, and being a release or non-stick surface;

(c) applying one or more other layers over the contoured release surface of the master pattern, including a reflective layer;

(d) positioning and compressing a curable, flowable replication material between the coated contoured surface of the master pattern and the complimentary contoured surface of the molded plastic substrate to fill the space therebetween;

(e) curing said replication material, and

(f) separating the master pattern and the molded plastic substrate to release the coating(s) from the release surface of the master pattern to the cured replication material to form a mirror having on the contoured surface of the molded plastic substrate the reflective layer having highly precise reflectance properties.

5,702,650
PROCESS FOR PRODUCING DENTAL PROSTHESES
Josef Hintersehr, Gross-Gerauerstr. 49, D-64347, Griesheim, Germany
Continuation-in-part of Ser. No. 264,630, Jun. 23, 1994, abandoned. This application Mar. 4, 1996, Ser. No. 610,306
Claims priority, application Switzerland, Jun. 24, 1993, #1894/93
Int. Cl.^{6} A61C *13/00;13/08*
U.S. Cl. 264—16 **7 Claims**

1. A process for producing a ceramic dental prosthesis, which comprises:
(a) shaping an unfinished piece made out of 92.1 to 93.5 wt. % zirconium oxide (ZrO_2), 4.5 to 5.5 wt. % yttrium oxide (Y_2O_3), 1.8 to 2.2 wt. % hafnium oxide (HfO_2), and up to 0.2 wt. % of any other oxides; and
(b) working the unfinished piece to form a dental prosthesis by means of a rotating tool having a circumference and being made of metal-bonded diamond grains with speeds of revolution for the tool of 10,000 to 50,000 revolutions per minute, with a first movement of the tool towards the piece of 0.1 to 0.5 millimeters per minute, and a second movement of the tool perpendicular to the first movement of 0.3 to 3.0 centimeters per second, and rotational speed along the circumference of the tool of 0.5 to 9.0 m/sec.

5,702,651
USE OF ORIENTED TABULAR AGGREGATE IN MANUFACTURE OF HIGH-FLEXURAL-STRENGTH CONCRETE
Dennis L. Bean; Philip G. Malone; Melvin C. Sykes; Judy C. Tom, and Donald M. Walley, all of Vicksburg, Miss., assignors to The United States of America as represented by the Secretary of the Army, Washington, D.C.
Filed Mar. 1, 1996, Ser. No. 614,838
Int. Cl.^{6} B28B *1/08;* **E04B** *1/16*
U.S. Cl. 264—34 **5 Claims**

1. A method of producing high-flexural-strength concrete comprising the steps of
(a) mixing coarse aggregate particles consisting of flat, tabular particles in a mixer with a wet hydraulic cement-sand mixture so as to coat the coarse aggregate particles with the cement-sand mixture and thus form a mixture of the coarse aggregate particles and the cement-sand mixture comprising from about 18% to about 48% by weight of the coarse aggregate particles;
(b) pouring the mixture of the coarse aggregate particles and the cement-sand mixture into a form, producing a first shallow layer;
(c) vibrating the form containing the mixture poured in step (b), thereby releasing air bubbles and orienting the coarse aggregate particles in the first shallow layer;
(d) pouring a second shallow layer of the mixture of the coarse aggregate particles and the cement-sand mixture into the form;
(e) again vibrating the form as in step (c);
(f) repeating the pouring and vibrating processes until the form is filled with the mixture of the coarse aggregate particles and the cement-sand mixture; and
(g) allowing the mixture of the coarse aggregate particles and the cement-sand mixture to cure into the high-flexural-strength concrete.

5,702,652
CONTROLLED COOLING OF POROUS MATERIALS
Michael A. Ricciardi, Fort Smith, Ark., and Anthony C. M. Griffiths, Cheshire, Great Britain, assignors to Crain Industries, Inc., St. Louis, Mo.
Continuation of Ser. No. 335,522, Nov. 7, 1994, abandoned, which is a continuation of Ser. No. 531,958, May 31, 1990, Pat. No. 5,401,448. This application Jan. 24, 1997, Ser. No. 788,627
Int. Cl.^{6} B29C *71/00;35/16*
U.S. Cl. 264—37 **17 Claims**

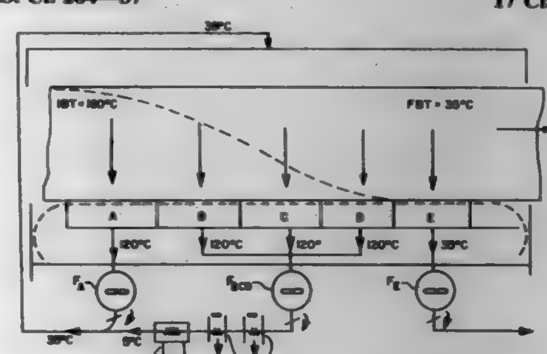

1. A process for cooling polyurethane foam which comprises:
passing first cooling gases through a first section of a polyurethane foam block in a first cooling zone at a predetermined flow rate to cool the foam and to remove volatiles therefrom;
thereafter passing second cooling gases through the same foam block section in a second cooling zone at a predetermined flow rate to further cool the foam and to further remove volatiles therefrom;
withdrawing at least a portion of the second cooling gases which exit the foam block section from the second zone; and
recovering volatiles from the withdrawn portion of the second cooling gases.

5,702,653
THICK-FILM CIRCUIT ELEMENT
Richard E. Riley, Riverside, Calif., assignor to Spectrol Electronics Corporation, Ontario, Canada
Filed Jul. 11, 1995, Ser. No. 500,547
Int. Cl.^{6} C04B *33/34*
U.S. Cl. 264—61 **1 Claim**

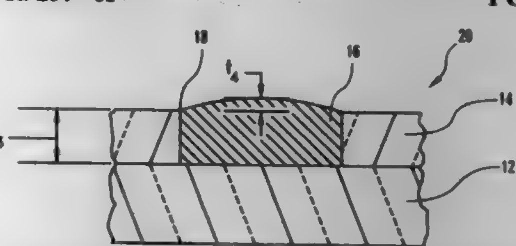

1. A process for producing a thick-film circuit element comprising the steps of:
applying a high-temperature glass frit layer to a surface of a ceramic substrate;
applying an electrically conductive cermet layer having a low-temperature glass matrix to the surface of the glass frit layer in a circuit element pattern;
measuring a cermet layer thickness above the surface of the glass frit layer;
adjusting the cermet layer thickness until the cermet layer thickness is substantially equal to a first predetermined thickness;
firing the cermet and the glass frit layers at a temperature sufficient to cause the cermet layer to sink into the glass frit layer;
controlling the temperature and duration at which the cermet and glass frit layers are fired to control the amount that the cermet layer sinks into the glass frit layer to a second predetermined thickness above the surface of the glass frit layer;
wherein a laser profilometer is used to measure the cermet layer thickness.

5,702,654
METHOD OF MAKING THERMAL SHOCK RESISTANT SAPPHIRE FOR IR WINDOWS AND DOMES
William W. Chen, Westchester, and Norman H. Harris, Newhall, both of Calif., assignors to Hughes Electronics
Filed Aug. 30, 1996, Ser. No. 706,090
Int. Cl.^{6} C04B *40/00*
U.S. Cl. 264—82 **12 Claims**

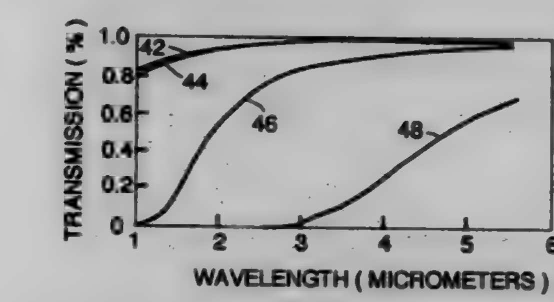

1. A process for strengthening a sapphire article having a volume comprising sapphire and having an outer surface, said process comprising the steps of:
(a) diffusing magnesium into at least a portion of said sapphire by exposing said sapphire article to magnesium vapor at a first temperature for a first time period;
(b) heating said sapphire article to a second temperature within the range of about 1800° to 2000° C., in the absence of magnesium vapor, for a second time period within the range of about 2 to 24 hours, thereby causing said magnesium to be substantially homogeneously distributed throughout said volume of said sapphire article;
(c) quenching said sapphire article to thereby cool said sapphire article to a third temperature within the range of about 1200° to 1450° C. over a third time period at a cooling rate of at least about 10° C./minute; and
(d) annealing said sapphire article at said third temperature for a fourth time period within the range from about 0.1 to 60 hours, thereby causing precipitation of magnesium aluminate spinel crystal particulates comprising magnesium aluminate spinel having said spinel crystal structure, said magnesium aluminate spinel particulates serving to precipitation-harden said sapphire article.

5,702,655
METHOD FOR CHARGING POWDERY HEAT INSULATOR INTO A THERMALLY INSULATED, DOUBLE-SHELLED TANK
Toshiro Kato, Hyogo-ken, Japan, assignor to L'Air Liquide, Societe Anonyme pour L'Etude et L'Exploitation des Procedes Georges Claude, Paris Cedex, France
Filed Jun. 2, 1995, Ser. No. 458,750
Claims priority, application Japan, Jun. 2, 1994, 6-142202
Int. Cl.^{6} B65D *88/02;* **F17C** *13/00*
U.S. Cl. 264—85 **9 Claims**

1. A method for charging a powdery heat insulator into a double-shelled tank having an inner vessel and an outer vessel to obtain a thermally insulated, double-shelled tank, which comprises the steps of:
introducing a mixture comprised of powdery heat insulator and water into a space between the inner vessel and outer vessel of the double-shelled tank;
draining the water from said space; and

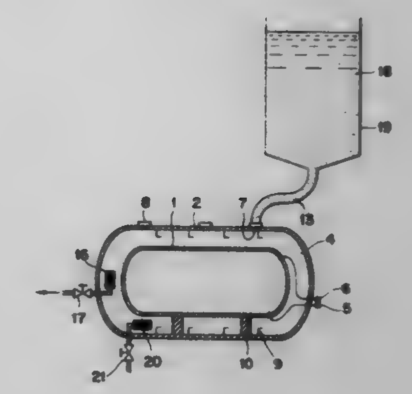

drying the powdery heat insulator in the space to remove water remaining in the space after the step of draining and thereby forming the thermally insulated, double-shelled tank.

5,702,656
PROCESS FOR MAKING POLYMERIC ARTICLES
David Sarver, Logansport; Keith D'Alessio, Warsaw, both of Ind., and Raymond A. D'Alessio, Madison, Conn., assignors to United States Surgical Corporation, Norwalk, Conn., and Biomet, Inc., Warsaw, Ind.
Filed Jun. 7, 1995, Ser. No. 473,186
Int. Cl.^{6} B29C *39/24;43/56;55/24*
U.S. Cl. 264—102 **15 Claims**

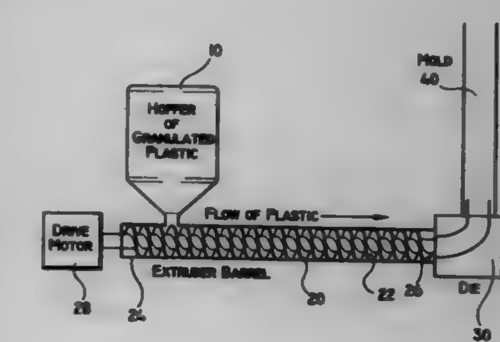

1. A process for making polymeric articles comprising:
forming a melt of a polymer;
extruding said polymer melt through a die to form a polymeric extrudate;
directly discharging the polymeric extrudate vertically upward into an open-ended mold to form a biocompatable polymeric article adapted to be implanted into a living organism, the open-ended mold having a longitudinal axis oriented substantially parallel to the direction of flow of the polymeric extrudate;
removing the polymeric article from the mold; and
cooling the polymeric article.
8. A process for making a polymeric article comprising:
loading a mold with biocompatable polymeric particles;
orienting the mold such that its longitudinal axis is substantially vertical;
drawing a vacuum on the loaded mold;
heating the loaded mold above the melting point of the polymeric particles;
pressurizing the loaded mold with an inert gas to above ambient pressure; and
cooling the loaded mold to form a polymeric article adapted to be implanted into a living organism.

5,702,657

METHOD FOR THE CONTINUOUS PRODUCTION OF A POLYETHYLENE MATERIAL HAVING HIGH STRENGTH AND HIGH MODULUS OF ELASTICITY

Sumio Yoshida; Takashi Komazawa, both of Yokohama; Kazuhiko Kurihara, Tokyo, and Hiroshi Yazawa, Kunitachi, all of Japan, assignors to Nippon Oil Co., Ltd., and Polymer Processing Research Institute Ltd., both of Tokyo, Japan

Filed Dec. 26, 1995, Ser. No. 578,433
Claims priority, application Japan, Dec. 27, 1994, 6-324309
Int. Cl.⁶ B29C *43/24;55/18*
U.S. Cl. 264—112 **25 Claims**

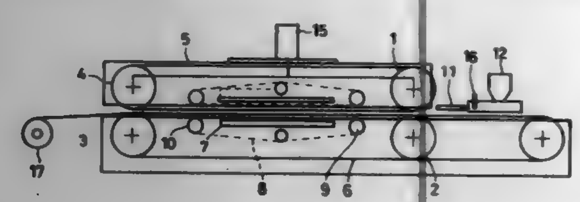

1. A method for the continuous production of a polyethylene material having high strength and high modulus of elasticity comprising:

rolling an ultra-high-molecular-weight polyethylene film said polyethylene having an intrinsic viscosity of 5 to 20 dl/g as measured in decalin at 135° C. with at least one thermoplastic resin film said thermoplastic resin having incorporated therein at least one additive selected from the group consisting of a coloring agent, a weathering stabilizer, an antistatic agent, a hydrophilicity-imparting agent, an adhesion promoter and a dyeability-imparting agent, and drawing the rolled material,

wherein said thermoplastic resin film is dispersed in the interior and/or surface of said ultra-high-molecular weight polyethylene film.

5,702,658

BICOMPONENT POLYMER FIBERS MADE BY ROTARY PROCESS

Michael T. Pellegrin; Patrick M. Gavin; Patrick L. Ault; James E. Loftus, all of Newark; Randall M. Haines, Frazeysburg, and Virgil Morris, Newark, all of Ohio, assignors to Owens-Corning Fiberglas Technology, Inc., Summit, Ill.

Filed Feb. 29, 1996, Ser. No. 608,795
Int. Cl.⁶ D01D *5/18;* **D01F** *8/06;8/12;8/14*
U.S. Cl. 264—172.14 **20 Claims**

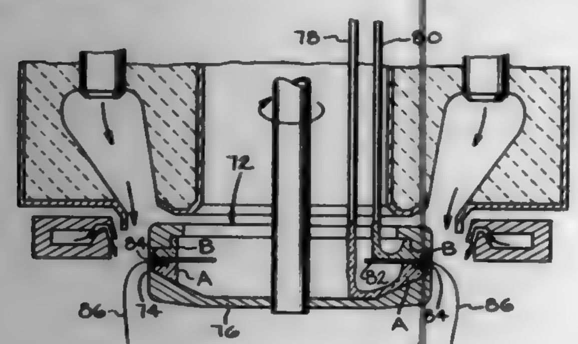

1. A method for making multicomponent fibers of thermoplastic material comprising:

supplying at least first and second molten thermoplastic materials to a rotating spinner having an orificed peripheral wall;

centrifuging the molten thermoplastic materials through the orifices as molten multicomponent streams of thermoplastic material; and

cooling the streams to make multicomponent fibers of thermoplastic material.

5,702,659

HONEYCOMB EXTRUSION DIE AND METHODS

Harry A. Kragle, Corning; Floyd E. Stumpff, and David R. Treacy, Jr., both of Elmira, all of N.Y., assignors to Corning Incorporated, Corning, N.Y.

Filed Nov. 30, 1995, Ser. No. 565,734
Int. Cl.⁶ B29C *47/12*
U.S. Cl. 264—177.11 **42 Claims**

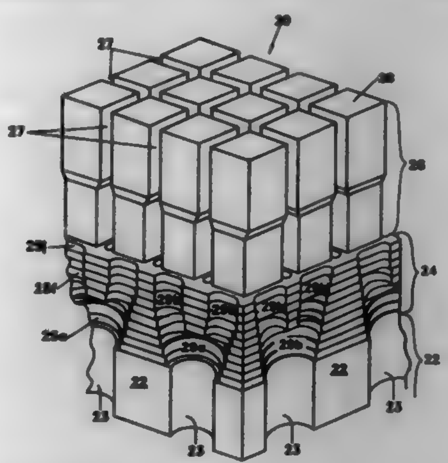

1. A honeycomb extrusion die comprising:

a feed section having a plurality of feedholes for the input of an extrudable material;

a discharge section terminating on a discharge face, the discharge face comprising a discharge opening for discharging the extrudable material as a channeled honeycomb body; and

a transition section disposed between and joined to each of the feed section and the discharge section, the transition section being formed of a stacked plurality of thin metal transition layers and containing a plurality of conduits, formed by successions of openings in the transition layers, the conduits being in at least partial registry with the feedholes and communicating with the discharge opening, for transporting the extrudable material as feed streams between the feed and discharge sections of the die.

25. A method for extruding a honeycomb product which comprises:

(i) introducing an extrudable material as a plurality of feed streams into a plurality of feedholes extending into a feed section of a honeycomb extrusion die;

(ii) delivering the feed streams from the feedholes into a multilayer metal transition section adjacent the feed section, the transition section comprising a plurality of conduits having openings in at least partial registry with the feedholes for conveyance of the feed streams;

(iii) redirecting, reshaping and/or dividing the feed streams within the conduits in the transition section to provide a plurality of redirected, reshaped and/or divided feed streams of extrudable material;

(iv) delivering the redirected, divided and/or reshaped feed streams from the transition section into a discharge section adjacent the transition section, the discharge section comprising a discharge opening connecting with the conduits and configured to discharge the extrudable material as a channeled honeycomb body; and

(v) discharging the extrudable material from the discharge opening as a honeycomb product.

36. A method for making a honeycomb extrusion die which comprises the steps of:

forming a plurality of feedholes in a die body plate;

forming an array of openings in each of a plurality of thin transition plates;

stacking the thin transition plates to form a plate stack comprising a base transition plate and a terminating transition plate wherein the openings in each plate are in at least partial registry with the openings in adjacent plates in the plate stack, and wherein the arrays of openings form an array of conduits through the plate stack;

positioning the base transition plate of the plate stack against the die body plate so that the feedholes are in at least partial registry with the conduits;

positioning a die discharge section against the terminating transition plate of the plate stack; and

joining the die body plate, plate stack and die discharge section together to form an extrusion die preform.

5,702,660

PROCESS FOR IN SITU MOLDING OF A BEARING MATERIAL IN A BALL AND SOCKET JOINT ASSEMBLY

Mark T. Allott, Chillicothe; James J. Billimack, Metamora, and Timothy C. Moritz, Peoria, all of Ill., assignors to Caterpillar Inc., Peoria, Ill.

Filed Mar. 25, 1996, Ser. No. 622,543
Int. Cl.⁶ B29C *45/14*
U.S. Cl. 264—242 **11 Claims**

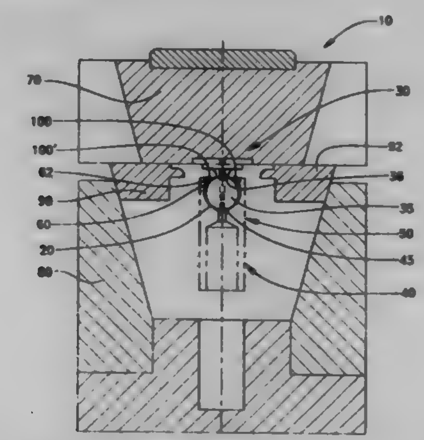

1. In a process for injection molding a plastic material into an interfacial space between a spherical ball and a spherical cavity of a ball and socket joint assembly to form a plastic bearing, said plastic bearing having an as-molded tapered undercut, said joint assembly including a ball assembly and a socket assembly, said ball assembly including said spherical ball and a neck, said spherical ball having an external surface, and said socket assembly including said spherical cavity, and said process utilizing a molding apparatus including a stationary mold adapted for receiving one of said ball assembly and said socket assembly, a movable mold adapted for receiving one of said ball assembly and said socket assembly and movable towards and away from said stationary mold, and first and second cross-slides, said cross-slides being in sliding contact with said stationary and movable molds, said cross-slides being adapted for slidably moving in response to and in a direction perpendicular to the movement of said movable mold, and said cross-slides being contactable with said ball and socket joint assembly when said spherical ball is positioned within said spherical cavity, an improvement, comprising the steps of:

selecting a sacrificial ring having a preselected outer diameter, a generally triangular cross-sectional shape, said sacrificial ring being separable into two or more semi-circular portions, said ring having first, second and third sides, and said ring being formed from a material dissimilar from said plastic bearing material;

positioning said ball within said spherical cavity and forming an interfacial space therebetween;

placing said sacrificial ring around said ball, said first side of said ring being in contact with the external surface of said ball, said second side of said ring being in sliding contact with said cross-slides when said cross-slides are urged towards said ball and socket assembly, and said third side of said ring forming a tapered end for confining said interfacial space;

closing said molding apparatus by urging said movable mold towards said stationary mold, and urging said cross-slides towards each other and towards said ball and socket joint assembly;

rigidly confining said sacrificial ring between said ball, said cavity, and said cross-slides;

injection molding said plastic material into said interfacial space and forming a plastic bearing having a tapered undercut which mimics the shape of said third side of said sacrificial ring, and;

opening said molding apparatus and removing said sacrificial ring, thereby providing said ball and socket joint assembly having said plastic bearing with said tapered undercut.

5,702,661

Patent Not Issued For This Number

5,702,662

PROCESS FOR ABLATING HIGH DENSITY VIAS IN FLEXIBLE SUBSTRATE

Adlai H. Smith, San Diego; Robert O. Hunter, Jr., Rancho Santa Fe; Bruce McArthur, San Diego; Steven Blair, San Diego, and Jim Wilkinson, San Diego, all of Calif., assignors to Litel Instruments, Inc., San Diego, Calif.

Filed Sep. 29, 1995, Ser. No. 536,863
Int. Cl.⁶ B23K *26/00*
U.S. Cl. 264—400 **6 Claims**

1. A process for ablating a matrix of high density vias in a substrate comprising the steps of:

providing a continuous flexible substrate;

providing a mask having subapertures, which subapertures when scanned produce at a working distance from the mask an array of working images for ablating a corresponding array of vias in the substrate;

providing a table for registering the substrate at the working distance from the mask;

incrementally advancing and stopping the continuous flexible substrate over the table;

providing a vacuum over the table and substrate;

scanning the mask with coherent light to ablate the substrate over the table when the substrate is stopped to ablate the matrix of vias in the substrate in a vacuum; and,

while maintaining the vacuum, removing debris from the table after the ablating step.

5,702,663

VACUUM BAG FOR FORMING FIBER REINFORCED COMPOSITE ARTICLES AND METHOD FOR USING SAME

William Seemann, Gulfport, Miss., assignor to Scrimp Systems, LLC, R.I.

Continuation of Ser. No. 465,230, Jun. 5, 1995, Pat. No. 5,601,852, which is a continuation of Ser. No. 250,169, May 27, 1994, Pat. No. 5,439,635, which is a continuation-in-part of Ser. No. 18,827, Feb. 18, 1993, Pat. No. 5,316,462. This application May 31, 1996, Ser. No. 660,187
Int. Cl.⁶ B29C *70/48*
U.S. Cl. 264—510 **57 Claims**

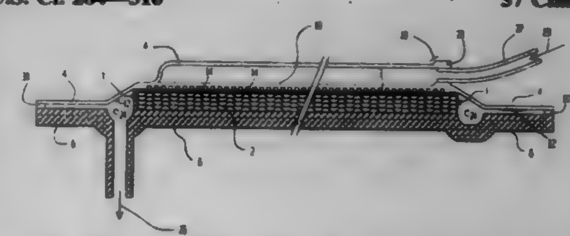

50. A method of forming a fiber reinforced composite structure by vacuum bag molding, the method comprising:

(a) placing a fiber lay up against a mold surface;

(b) providing a vacuum bag assembly comprising:
a sheet having a periphery and an inner surface, the inner surface having a contour which defines spaces between the inner surface and a fiber lay up for distribution of resin when the sheet is placed over the fiber lay up, and
a resin distribution conduit combined with the sheet so as to be removable from the composite structure with the sheet, said resin distribution conduit in fluid communication with the spaces defined between the contoured inner surface and the fiber lay up;
(c) sealing the fiber lay up between the mold surface and the vacuum bag assembly, wherein the contoured inner surface of the sheet is disposed adjacent the fiber lay up; and
(d) drawing uncured resin under vacuum through the resin distribution conduit and the resin distribution spaces to impregnate the fiber lay up.

5,702,664
METHOD OF AND APPARATUS FOR EXTRUSION-MOLDING A LAMINATED PARISON, AND A VESSEL PRODUCED FROM THE LAMINATED PARISON
Yosuke Yamada; Shigeaki Sano; Toshiji Yoshida, and Toshio Kagitani, all of Yokohama, Japan, assignors to The Japan Steel Works, Ltd., Tokyo, Japan
Filed Dec. 15, 1995, Ser. No. 574,458
Claims priority, application Japan, Oct. 6, 1995, 7-260324
Int. Cl.^{6} B29C *47/26;49/22*
U.S. Cl. 264—515 **3 Claims**

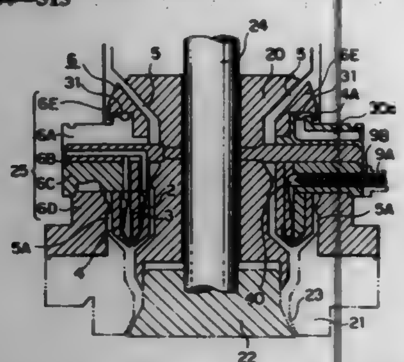

1. In a method of extrusion molding a laminated parison comprising at least inner and outer main materials, first and second adhesive materials, and a barrier material, the method comprising extruding said materials through a plurality of first, second and third annular nozzles, and inner and outer main material flow passages from an adhesive material extruder which is connected to said first and third annular nozzles, a barrier material extruder which is connected to said second annular nozzle, and a main material extruder which is connected to said inner and outer material flow passages, wherein said first, second and third annular nozzles and said inner and outer main material flow passages are connected to an extrusion nozzle, said nozzles and passages being provided in a die head, the improvement comprising:
using EVOH as said barrier material;
extruding said EVOH from an end portion of a screw of said barrier material extruder inserted into said second annular nozzle, such that said end portion is opposite a ridge formed in said second annular nozzle;
dividing said barrier material by said ridge;
shaping a reclaimed material through a fourth annular nozzle; and
extruding said materials through said extrusion nozzle whereby a four-different-materials six-layered laminated parison is achieved which comprises six-layers made of four different materials: namely, said inner main material layer, first adhesive layer, barrier material layer, second adhesive material layer, reclaimed material layer and outer main material layer.

2. An extrusion molding apparatus comprising a die head provided with an extrusion nozzle; a plurality of first, second, third and fourth annular nozzles, and inner and outer main material flow passages, each of said annular nozzles and said flow passages having first ends connected to said extrusion nozzle; a main material extruder connected to a second end of said inner and outer main material flow passages; an adhesive material extruder connected to a second end of said first and third annular nozzles; a reclaimed material extruder connected to a second end of said fourth annular nozzle; and a barrier material extruder connected to a second end of said second annular nozzle, for extruding inner and outer main materials, first and second adhesive materials, a reclaimed material and a barrier material, respectively, through said extrusion nozzle to form a laminated parison;
the barrier material extruder having a cylinder connected to said second annular nozzle for supplying the barrier material, said cylinder extending into said second annular nozzle;
said cylinder including a screw therein, said screw having an end portion;
said second annular nozzle having a ridge situated opposite to said end portion of said screw (9A), whereby said barrier material core layer which is extruded from said end portion of said screw is divided by said ridge as it enters said second annular nozzle; and
said fourth annular nozzle for supplying said reclaimed material being formed by a cap ring and a first spider ring of said die head, said fourth annular nozzle being connected to a groove which is formed in an end surface of said first spider ring, and said fourth annular nozzle being situated inside said outer main material flow passage.

5,702,665
PROCESS FOR HEAT TREATING THERMOPLASTIC CONTAINERS
Emery I. Valyi, 102 Moseman Ave., Katonah, N.Y. 10539
Filed Jan. 31, 1995, Ser. No. 381,708
Int. Cl.^{6} B29C *49/16*
U.S. Cl. 264—521 **9 Claims**

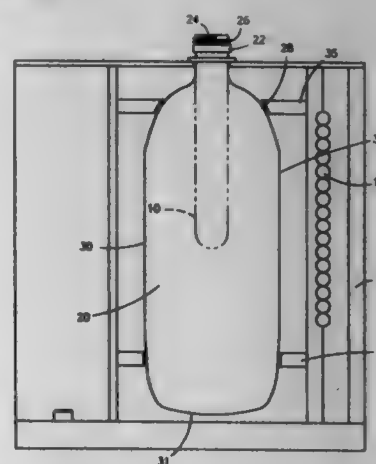

1. A process for preparing a thermoplastic container, comprising the steps of:
providing a biaxially oriented, crystallized precontainer having a first contained volume by expanding said precontainer from a tubular preform;
selectively further crystallizing said precontainer by applying heat thereto while the precontainer is substantially unconstrained, including the step of protecting from heating those portions of the precontainer that have been deformed less than 2-fold in the course of expanding the preform to form said precontainer, and forming a deformed precontainer having a second contained volume;
controlling deformation of the precontainer by closing the precontainer prior to further crystallizing in a manner permitting the controllable air escape from the precontainer and while the precontainer remains substantially unconstrained to create a predetermined increased air pressure in the deformed precontainer;

reshaping the deformed precontainer by blow molding into a final container shape;
wherein the increased air pressure in the deformed precontainer is controlled so as to provide said second contained volume of the deformed precontainer to be sufficiently close to the volume of the final container such that during reshaping, stresses are minimized, and wherein the deformation of the precontainer is controlled so as to obtain a size and shape capable of being transformed into a predetermined final shape without further substantial deformation by changing the shape of said crystallized precontainer in a blow mold into that of said container; and
wherein the increased air pressure limits the amount of deformation of the precontainer and permits only symmetrical shrinking; and
wherein said precontainer has a level of orientation, and wherein said second contained volume being defined by a shape such as to substantially maintain the level of orientation of the precontainer.

5,702,666
METHOD FOR MAKING SHEET BUTTON PANEL ASSEMBLY
Yoshiharu Hatakeyama, and Yukitomo Yuhara, both of Tokyo, Japan, assignors to Yoshida Kogyo Co., Ltd., Tokyo, Japan
Filed May 24, 1995, Ser. No. 449,388
Claims priority, application Japan, Feb. 14, 1995, 7-025493
Int. Cl.^{6} B29C *45/14;51/02*
U.S. Cl. 264—544 **8 Claims**

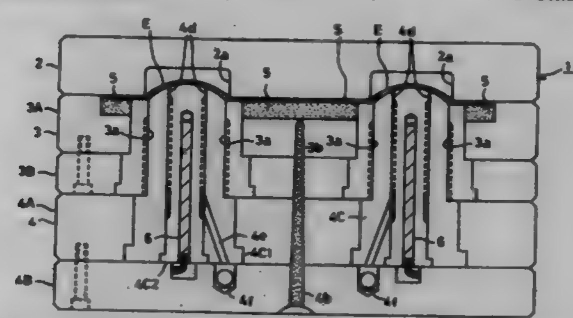

1. A method for making a sheet button panel assembly, comprising:
clamping a first portion of a sheet by first and second molds;
embossing a second portion of said sheet by contacting only one of said first and second molds to said second portion of said sheet; and
injecting resin into a cavity defined by said first portion of said sheet and either one of said first and second molds, such that said resin is provided only to said first portion of said sheet thereby forming said sheet button panel assembly, wherein one of said first and second molds is movable to clamp said first portion of said sheet in cooperation with the other of said first and second molds, said one of said first and second molds includes a core mold which projects into a recess formed in said other of said first and second molds to emboss said second portion of said sheet.

5,702,667
METHOD AND APPARATUS FOR HEAT TREATING A BUSHING
Dennis C. Pond, Tremont, Ill., assignor to Caterpillar Inc., Peoria, Ill.
Filed Aug. 16, 1996, Ser. No. 698,836
Int. Cl.^{6} H05B *6/40*
U.S. Cl. 266—249 **3 Claims**

1. An apparatus for heat treating a bushing, said apparatus comprising:
a machine frame;

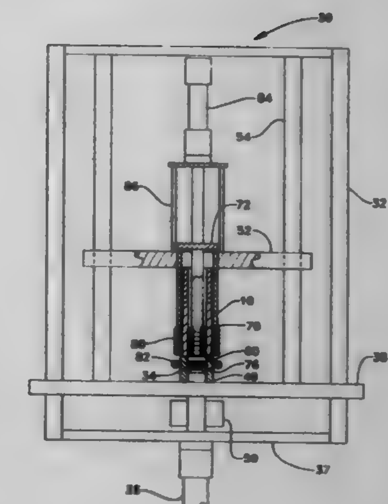

means for locating said bushing concentrically with respect to a central axis, said means for locating mounted on said machine frame;
a carriage being attached to said machine frame;
a driver having a generally cylindrical configuration and defining a bore, said bore radially supporting the bushing, said driver supporting one of a pair of ends of the bushing, said driver being rotatably mounted to the carriage, and being rotatably and slidably disposed about said means for locating;
a plurality of ways being mounted to said machine frame;
a tailstock being connected to said plurality of ways, said tailstock being movable along said plurality of ways;
a quill having a generally cylindrical configuration and defining a bore, said bore radially supporting the bushing, said quill supporting one of the pair of ends, said quill being rotatably mounted to the tailstock;
a first induction heating coil having a plurality of turns formed to a diameter smaller than the longitudinal bore of the bushing and being supported by the support plate;
a second induction heating coil having a plurality of turns formed to a diameter larger than the outer peripheral surface of the bushing and being supported by the support plate;
an inner cooling ring being supported by the support plate and suspended through the center of the first induction coil in a spaced relationship to the first induction coil; and
an outer cooling ring being supported by the support plate and suspended in a spaced relationship to the second induction coil.

5,702,668
COBALT-FREE HARDFACING ALLOYS WITH IMPROVED WELDING CHARACTERISTICS
Howard Ocken, Palo Alto, Calif.; Shane J. Findlan, Harrisburg, and Michael K. Phillips, Matthews, both of N.C., assignors to Electric Power Research Insitute, Inc., Palo Alto, Calif.
Continuation-in-part of Ser. No. 333,959, Nov. 3, 1994, abandoned. This application Sep. 6, 1996, Ser. No. 708,177
Int. Cl.^{6} C22C *38/44*
U.S. Cl. 420—57 **15 Claims**

1. A cobalt-free iron-base wear-resistant and anti-galling hardfacing alloy consisting essentially by weight of about 1.10–1.35% carbon; at least 4.0%, but less than 5.0% manganese; 3.0–3.5% silicon; 22.5–26.0% chromium; 3.7–4.2% nickel; 1.82.2% molybdenum; 0.02–0.18% nitrogen; less than 0.018% phosphorus; less than 0.010% sulphur; less than 0.002% boron; and the balance iron; said alloy having a microstructure consisting essentially of austenitic matrix and eutectic alloy carbides.

5,702,669
APPARATUS METHOD FOR STERILIZATION USING ETHYLENE OXIDE
Edward Francis Green, 330 Flat Roof Mill Rd., East Swanzey, N.H. 03446
Filed Dec. 21, 1995, Ser. No. 576,284
Int. Cl.^{6} A61L *9/00*
U.S. Cl. 422—30 **15 Claims**

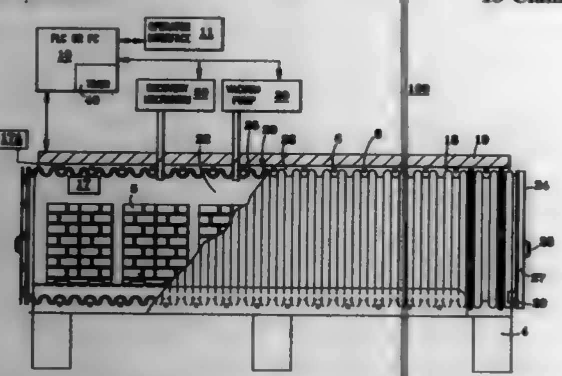

1. A method of gas sterilizing a product comprising the steps of:
preconditioning said product by interjecting steam and heat to said product;
loading said product to be sterilized within a sealable chamber said sealable chamber defined by a corrugated wall structure of a sterilizing unit;
introducing moisture to a predetermined relative humidity within said sealable chamber;
flushing with an inert gas said sealable chamber;
heating and cooling of said sealable chamber;
creating pressure and vacuum within said sealable chamber;
injecting a controlled amount of said sterilant into said sealable chamber;
degassing and recovering said gas sterilant from within said sealable chamber;
controlling, sequence and time of each of said temperature, pressure and vacuum, relative humidity, flushing, injecting said amount of injected sterilant and degassing and recovering of said gas sterilant; and
whereby a non-sterile product becomes a sterilized product without transferring said product to multiple locations.

5,702,670

Patent Not Issued For This Number

5,702,671
GAS CHROMATOGRAPHY TRANSFER LINE
Eberhard Gerstel, Aktienstr. 232-234, D-45473 Mülheim, Germany
Filed Jun. 11, 1996, Ser. No. 664,310
Claims priority, application Germany, Jun. 12, 1995, 195 20 715.7
Int. Cl.^{6} G01N *30/16*
U.S. Cl. 422—103 **10 Claims**

1. A gas chromatography transfer line with an entry end and an exit end, comprising:
a first tube constructed of glass;
a second tube constructed of steel enclosing said first tube;
a heating coil enclosing said second tube;
a third tube constructed of a material with a thermal conductivity higher than that of the second tube;
said third tube having an axial and a circumferential direction and
being arranged between said second tube and said heating coil so as to provide interstices between said second tube and said third tube,

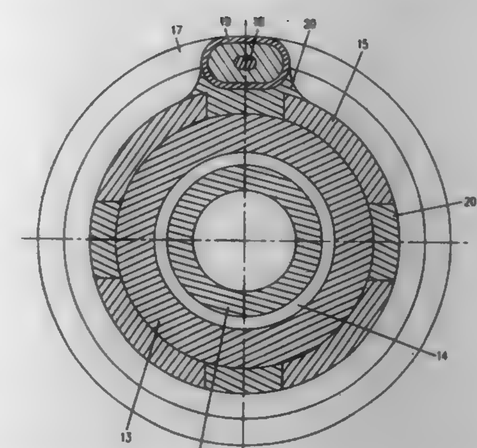

the third tube being provided with a series of bores spaced apart in said axial and in said circumferential direction and
the third tube being soldered by a solder to said heating coil and to said second tube;
wherein said solder fills said bores and said interstices between said second tube and said third tube.

5,702,672
APPARATUS AND METHOD FOR MULTIPLE SIMULTANEOUS SYNTHESIS
Sheila H. H. DeWitt, Dexter, Mich.; Michael Keil, Vineland, N.J.; Michael R. Pavia, Newton, Mass.; John S. Kiely, San Diego, Calif.; Mel C. Schroeder, Dexter; Charles J. Stankovic, Saline, both of Mich., and Steven Ware, Vineland, N.J., assignors to Warner-Lambert Company, Morris Plains, N.J.
Continuation-in-part of Ser. No. 430,696, Apr. 28, 1995, Pat. No. 5,612,002, which is a division of Ser. No. 217,347, Mar. 24, 1994, abandoned, which is a division of Ser. No. 12,557, Feb. 2, 1993, Pat. No. 5,324,483, which is a continuation-in-part of Ser. No. 958,383, Oct. 8, 1992, abandoned. This application Oct. 10, 1995, Ser. No. 540,512
Int. Cl.^{6} B01J *19/00;8/00;* **C12M** *1/00;* **C07K** *17/00*
U.S. Cl. 422—131 **4 Claims**

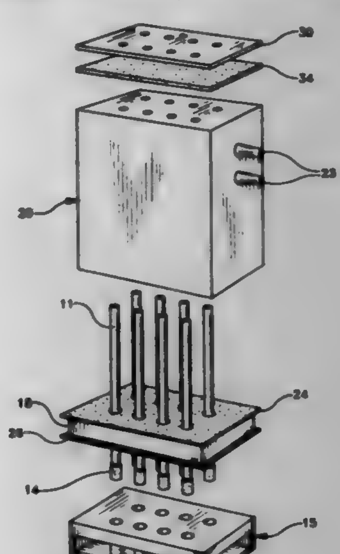

1. A reaction tube having an upper end, joint section, an intermediate section and a lower end, said lower end containing a filter device, wherein the reaction tube comprises a gas dispersion tube, the joint section comprises ground glass and the intermediate section comprise a means for equilibration of any pressure differentials within a sealed apparatus.

5,702,673
OZONE GENERATING APPARATUS
Naruhiko Kaji, Yokohama; Yutaka Nakano, Yokkaichi; Rempei Nakata, Kamakura; Minoru Harada, Fujisawa; Ryoichi Shinjo, and Manabu Tsujimura, both of Yokohama, all of Japan, assignors to Ebara Corporation, Tokyo, and Kabushiki Kaisha Toshiba, Kawasaki, both of Japan
Filed Apr. 17, 1996, Ser. No. 633,551
Claims priority, application Japan, Apr. 17, 1995, 7-115128
Int. Cl.^{6} C01B *13/11*
U.S. Cl. 422—186.07 **4 Claims**

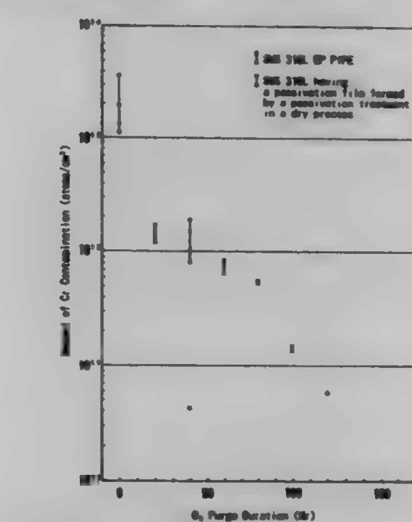

1. An ozone generating apparatus comprising:
a high voltage source;
an ozone generating cell which generates ozone gas by supplying a material gas comprising oxygen gas to which a small amount of nitrogen gas is added while applying a high voltage from said high voltage source; and
a passage for delivering the generated ozone gas from said ozone generating cell to a desired location, said passage comprising stainless steel having a passivation film comprising one of chromium oxide film, iron oxide film and a composite film of chromium oxide and iron oxide formed by a passivation treatment in a dry process.

5,702,674
FRAMEWORK METAL-SUBSTITUTED MANGANESE OXIDE OCTAHEDRAL MOLECULAR SIEVE AND PROCESS FOR ITS PREPARATION
Chi Lin O'Young, Beacon, N.Y.; Yan-Fei Shen, Storrs, Conn.; Roberto Nguyen Dequzman, Ashford, Conn., and Steven Lawrence Suib, Storrs, Conn., assignors to Texaco Inc., White Plains, N.Y.
Continuation of Ser. No. 215,496, Mar. 21, 1994, abandoned. This application Jun. 24, 1996, Ser. No. 667,487
Int. Cl.^{6} G01G *45/00;45/12*
U.S. Cl. 423—50 **11 Claims**

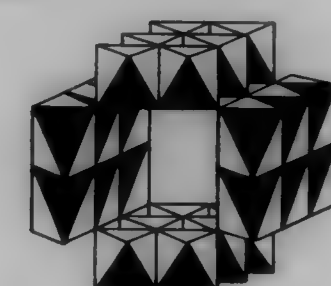

1. A manganese oxide octahedral molecular sieve which possesses a 2×2 tunnel structure and in which a portion of the manganese present in the framework structure of the molecular sieve is substituted by another metal.

5,702,675
CATALYST FOR PURIFYING EXHAUST GASES AND PROCESS FOR PRODUCING THE SAME
Shinichi Takeshima, Susono; Toshiaki Tanaka, Numazu, and Satoshi Iguchi, Mishima, all of Japan, assignors to Toyota Jidosha Kabushiki Kaisha, Japan
Filed Dec. 13, 1995, Ser. No. 571,638
Claims priority, application Japan, Dec. 16, 1994, 6-313665
Int. Cl.^{6} B01D *53/92*
U.S. Cl. 423—213.5 **12 Claims**

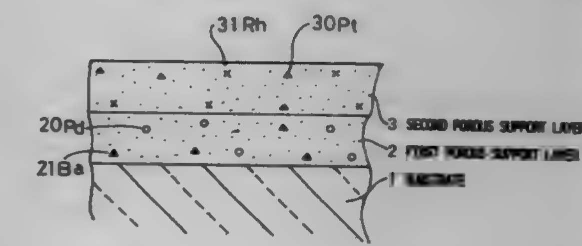

1. A process for purifying carbon monoxide, hydrocarbons and nitrogen oxides in exhaust gases in oxygen-rich atmosphere, thereby purifying the exhaust gases, the process comprising:
bringing exhaust gases in oxygen-rich atmosphere, whose oxygen concentration is more than required for oxidizing the components to be oxidized therein, into contact with a catalyst:
the catalyst comprising:
a catalyst substrate;
a first porous support layer consisting essentially of first porous support supporting palladium and at least one kind of NOx-occluding material selected from the group consisting of alkali metals, alkaline earth metals and rare earth elements, and formed on a surface of said catalyst substrate; and
a second porous support layer comprising a second porous support supporting at least platinum, and formed on a surface of said first porous support layer, and wherein said second porous support layer supports no components having oxygen-occluding ability.

5,702,676
PRODUCTION METHOD FOR OBTAINING PRESSABLE POWDER YIELDING HIGH SINTER DENSITY PELLETS WITHOUT DEFECTS
Richard I. Larson, Wilmington; Stephen E. Selby, Wrightsville, and Michael P. Eager, Wilmington, all of N.C., assignors to General Electric Company, Schenectady, N.Y.
Filed Jun. 20, 1996, Ser. No. 667,795
Int. Cl.^{6} C01G *43/025*
U.S. Cl. 423—261 **6 Claims**

1. A process of preparing UO_2 powder comprising the steps of:
(a) oxidizing uranium-containing scrap also containing inorganic and cationic organic impurities;
(b) solubilizing the uranium contained in the oxidized scrap to produce uranyl nitrate;
(c) solvent extracting the solubilized product of step (b) to remove cation impurities to provide a purified uranyl nitrate solution;
(d) precipitating the purified uranyl nitrate with ammonia to form ammonium diuranate powder; and
(e) calcining and passivating the ammonium diuranate powder to produce UO_2 powder.

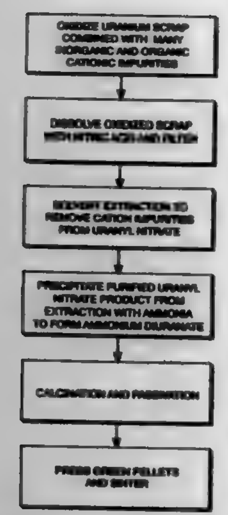

wherein the solvent after use in extraction step (c) contains dibutyl phosphate and is stripped to reduce the dibutyl phosphate content to at most about 40 ppm.

5,702,677

SPHERICAL HYDROXYAPATITE PARTICLES AND PROCESS FOR THE PRODUCTION THEREOF

Lawrence A. Shimp, and Peter J. Renkema, both of Leiden, Netherlands, assignors to Osteotech, Inc., Eatontown, N.J.

Filed Jul. 10, 1996, Ser. No. 679,611

Int. Cl.[6] C01B *25/32*

U.S. Cl. 423—308 **10 Claims**

1. A process for producing spherical, non-porous hydroxyapatite particles having a size which does not exceed 250 microns, and having a density of at least 3.00 g/cc, comprising:

agglomerating in the presence of water as the only additive a hydroxyapatite powder feedstock having a purity of at least 97% and having metallic impurities which do not exceed 500 ppm, to form hydroxyapatite particles having a size which does not exceed 350 microns;

drying said hydroxyapatite particles; and

sintering said dried hydroxyapatite particles at a temperature of from about 1,100° C. to about 1,200° C. to provide spherical, non-porous hydroxyapatite particles having a size which does not exceed 250 microns and having a density of at least 3.00 g/cc.

9. Hydroxyapatite particles produced according to the process of claim 1.

5,702,678

METHOD FOR OPTIMIZING THE TEMPERATURE OF A CLAUS UNIT

Denis Cieutat, Neuilly-sur-Seine, France, and Emmanuel Schmidt, Houston, Tex., assignors to L'Air Liquide, Paris Cedex, France, and Air Liquide America Corporation, Walnut Creek, Calif.

Continuation of Ser. No. 228,238, Apr. 15, 1994, abandoned. This application Jul. 1, 1996, Ser. No. 673,033

Int. Cl.[6] B01D *53/50;53/52;* **C01B** *17/50;17/69*

U.S. Cl. 423—567.1 **24 Claims**

1. A process for the recovery of sulfur from sulfur-containing fluid mixtures, comprising the steps of:

a) recovering a sulfur-dioxide-containing gas from a sulfuric acid treatment unit;

b) feeding a H_2S-containing gas to a thermal reactor of a Claus unit;

c) reacting at least a portion of said SO_2-containing gas in said Claus unit thermal reactor;

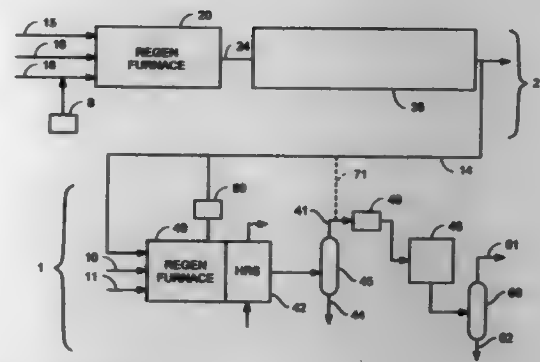

d) controlling the temperature in the Claus unit thermal reactor by diverting a portion of said portion in step C of the SO_2-containing gas to a downstream catalytic Claus convertor without reacting the diverted SO_2 in the Claus thermal reactor, in an amount effective to maintain the average temperature in the Claus thermal reactor at less than 3250° F.; and

e) recovering a sulfur product from said Claus unit.

5,702,679

METHOD OF PREPARING $LI_{1+X}MN_{2-X}O_4$ FOR USE AS SECONDARY BATTERY

Stephen W. Sheargold, and Terrell N. Andersen, both of Edmond, Okla., assignors to Kerr-McGee Chemical Corp., Oklahoma City, Okla.

Filed Oct. 6, 1995, Ser. No. 540,116

Int. Cl.[6] C01G *45/12*

U.S. Cl. 423—599 **61 Claims**

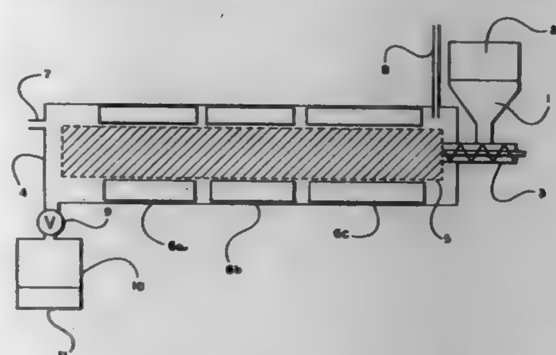

1. A continuous method of preparing a single phase lithiated manganese oxide intercalation compound of the formula $Li_{1+x}Mn_{2-x}O_4$ having a spinel-type structure comprising the steps of:

(a) mixing intimately in amounts, based on said lithiated manganese oxide compound, a lithium hydroxide or a lithium salt and a manganese oxide or a manganese salt;

(b) feeding the intimately mixed compounds to a reactor;

(c) continuously agitating the mixed compounds in the reactor;

(d) heating the agitated mixed compounds in the reactor in the presence of air or an oxygen-enriched atmosphere at a temperature of from about 650° C. to about 800° C. for a time not in excess of about 4 hours to form;

(e) cooling the reacted product to less than about 200° C. in less than about 2 hours; wherein x is from about 0.0328 to about 0.125 and the a-axis lattice parameter is about 8.235 Å or less.

49. A method of synthesizing a lithium manganese oxide of the formula $Li_{1+x}Mn_{2-x}O_4$ having a spinel-type crystal structure with an a-axis lattice parameter of about 8.235 Å or less, and wherein x is from about 0.0328 to about 0.125 comprising forming an intimate mixture in finely divided solid form of at least one lithium hydroxide or lithium salt reactant selected from the group consisting of LiOH, Li_2CO_3, $LiNO_3$ and mixtures thereof and at least one manganese oxide or manganese salt reactant selected from the group consisting of MnO_2, Mn_2O_3, $MnCO_3$, Mn_3O_4, MnO, manganese acetate and mixtures thereof and continuously agitating and heating the mixure in a reactor under a continuous purge of countercurrent air at a temperature in the range of from about 650° C. to about 800° C. for a period not in excess of about 4 hours to cause said reactants to react with each other to form said lithium manganese oxide.

53. A lithium manganese oxide having a spinel crystal structure, synthesized by the method of claim 49.

5,702,680

Patent Not Issued For This Number

5,702,681

METHOD FOR DETECTING FLUKICIDAL ACTIVITY

Mary Ehlers Doscher, Trenton, N.J., assignor to American Cyanamid Company, Madison, N.J.

Division of Ser. No. 306,072, Sep. 14, 1994, which is a division of Ser. No. 842,283, Feb. 26, 1992, Pat. No. 5,371,239, which is a continuation-in-part of Ser. No. 455,685, Dec. 22, 1989, abandoned. This application May 4, 1995, Ser. No. 434,610

Int. Cl.[6] A61K *49/04;* **G01N** *31/00;33/48*

U.S. Cl. 424—9.2 **8 Claims**

1. A method for detecting flukicidal activity of a compound comprising the steps of:

(a) administering a non-lethal dosage of the compound to an animal;

(b) waiting a period of time sufficient to allow the compound to circulate to the animal's liver;

(c) dissecting the animal's liver;

(d) administering a portion of the dissected liver to a medium containing a free-living flatworm wherein the portion is of an amount sufficient for the flatworm to feed upon;

(e) observing the flatworm for feeding upon the dissected liver and;

(f) observing the flatworm for the presence of mortality or morbidity.

5,702,682

METHODS FOR PREPARING RADIOPAQUE MEDICAL DEVICES

Samuel Anthony Thompson, Wilmington, Del., assignor to Hercules Incorporated, Wilmington, Del.

Filed Dec. 1, 1995, Ser. No. 566,452

Int. Cl.[6] A61K *49/04*

U.S. Cl. 424—9.42 **24 Claims**

1. A method for increasing the radiopacity of a medical device comprising:

(a) providing: (i) a medical device comprising a cation salt of an anionic polymer and (ii) an aqueous solution of a water-soluble composition containing metal-cations of atomic weight greater than about 40; and

(b) soaking said medical device in said aqueous solution for a time effective to replace at least a portion of the cations in the medical device with said metal-cations to form an essentially water-insoluble metal-cation salt of anionic polymer dispersed within said medical device, thereby obtaining a medical device with increased radiopacity.

5,702,683

NUCLEAR MAGNETIC RESONANCE CONTRAST AGENTS

Paul H. Smith; James R. Brainard; Gordon D. Jarvinen, and Robert R. Ryan, all of Los Alamos, N. Mex., assignors to The United States of America as represented by the United States Department of Energy, Washington, D.C.

Continuation of Ser. No. 301,678, Jan. 24, 1989, abandoned. This application Jan. 22, 1991, Ser. No. 643,092

Int. Cl.[6] A61B *5/055;* **C07F** *5/00;* **G01N** *24/00*

U.S. Cl. 424—9.361 **6 Claims**

1. A method of enhancing contrast of a magnetic resonance image of a living organism by incorporating a contrast agent into the organism, in an amount effective to enhance contrast of the image, prior to forming the image or during formation of the image, where said contrast agent is a paramagnetic lanthanide hexaazamacrocyclic molecule and has the structural formula

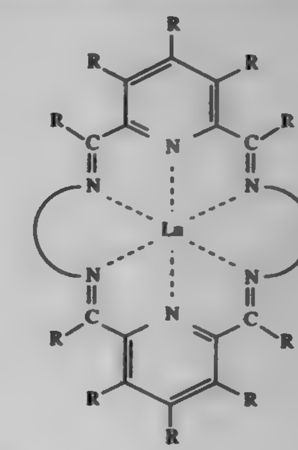

where the symbol

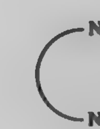

and the symbol

denotes a constituent of the contrast agent chosen from a group consisting of five constituents having the structures

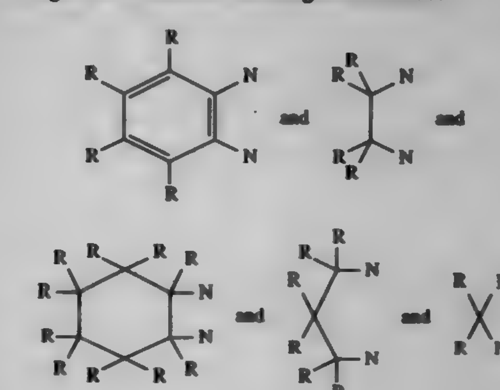

and where R represents a hydrogen atom or a substituent group chosen from a class consisting of alkyl, alkoxy, acyl, aroxy, alkylamine, aryl, hydroxy, aryloxy, amine, carboxylate, phosphate, and sufonate groups.

5,702,684

METHOD OF USE OF COMPOSITIONS OF BIOCIDES AND FLUORESCENT INDICATORS TO CONTROL MICROBIAL GROWTH

William F. McCoy, Naperville, and John E. Hoots, St. Charles, both of Ill., assignors to Nalco Chemical Company, Naperville, Ill.

Continuation-in-part of Ser. No. 236,945, May 2, 1994, abandoned. This application Nov. 14, 1995, Ser. No. 557,882

Int. Cl.⁶ A61K *49/00;* **C02F** *1/00*

U.S. Cl. 424—10.3 **18 Claims**

1. A method for controlling the feed rate of an aqueous biocide for controlling growth of microbiological organisms into an aqueous system containing said microbiological organisms which comprises the steps of:

a) adding to said system a known amount of a biocide/inert fluorescent compound combination selected from the group consisting of glutaraldehyde/1,5 naphthalene disulfonic acid, glutaraldehyde/1,3,6,8 pyrene tetrasulfonic acid, mixture of 5-chloro-2-methyl-4-isothiazolin-3-one and 2-methyl-4-isothiazolin-3-one/1,5 naphthalene disulfonic acid, mixture of 5-chloro-2-methyl-4-isothiazolin-3-one/1,3,6,8 pyrene tetrasulfonic acid, glutaraldehyde/fluorescein, alkyl dimethyl benzyl ammonium chloride quaternary/2-naphthalene sulfonic acid and 2-(decylthio)-ethanamine/2-naphthalene sulfonic acid, wherein said inert fluorescent compound is present in from 0.0005 to 10 percent by weight based on the weight of active biocide in a weight ratio of active biocide to inert fluorescent compound of from 3:1 to 1000:1, said biocide being added at a level to provide a system having a biocide dosage at or slightly greater than the minimum inhibitory concentration for said biocide in the system;

b) measuring the fluorescence of said inert fluorescent compound; and

c) maintaining the fluorescence in the system at a constant rate equal to the fluorescence at or slightly greater than the minimum inhibitory concentration of the biocide by adding additional biocide as required.

5,702,685

Patent Not Issued For This Number

5,702,686

CLEAR DENTRIFICE GEL FOR INTERDENTAL BRUSHES

Kiyoshi Maekawa, Mount Prospect, and Christina M. Calhoon, Elgin, both of Ill., assignors to John O. Butler Company, Chicago, Ill.

Filed Jul. 18, 1995, Ser. No. 503,716

Int. Cl.⁶ A61K *7/16;7/18*

U.S. Cl. 424—49 **18 Claims**

1. A clear, mildly abrasive, low-viscosity dentrifice gel which can be safely swallowed for use with a twisted wire interdental brush comprising:

a) from about 70% to about 85% of a humectant;

b) from about 5% to about 15% of a silica dental abrasive having an average particle size of less than about 10 microns;

c) from about 5% to about 15% of water; and

d) from about 0.2% to about 5.0% of an emulsifier.

5,702,687

CHEWING GUM PRODUCT WITH PLAQUE-INHIBITING BENEFITS

Regina M. Miskewitz, Somerville, N.J., assignor to Church & Dwight Co., Inc., Princeton, N.J.

Filed Oct. 3, 1995, Ser. No. 539,010

Int. Cl.⁶ A61K *9/68;7/16;7/18;33/10*

U.S. Cl. 424—52 **8 Claims**

1. A chewing gum product comprising (1) between about 15–80 weight percent of a gum base; (2) between about 1–30 weight percent of dispersed particles of an organic-encapsulated alkali metal bicarbonate ingredient having an average particle size between about 20–200 microns; (3) between about 0.5–25 weight percent of alkali metal bicarbonate powder ingredient having an average particle size between about 0.5–20 microns; (4) between about 0.01–8 weight percent of a plaque-inhibiting ingredient; (5) between about 5–70 weight percent of a water-soluble bulking ingredient; (6) between about 0.2–5 weight percent of a flavorant ingredient; (7) between about 0–0.2 weight percent of a colorant ingredient; (8) between about 1–20 weight percent of an additional abrasive ingredient other than sodium bicarbonate; (9) between about 0–15 weight percent of a surfactant ingredient; (10) between about 0.05–3 weight percent of a fluoridating ingredient; and (11) between about 0–15 weight percent of glycerin or lecithin or a mixture thereof.

5,702,688

AMPHOTERIC COMPOSITIONS AND POLYMERIC FORMS OF ALPHA HYDROXYACIDS, AND THEIR THERAPEUTIC USE

Ruey J. Yu, Ambler, and Eugene J. Van Scott, Abington, both of Pa., assignors to Tristrata Technology, Inc., Wilmington, Del.

Continuation of Ser. No. 840,149, Feb. 24, 1992, abandoned, which is a division of Ser. No. 393,749, Aug. 15, 1989, Pat. No. 5,091,171, which is a continuation-in-part of Ser. No. 945,680, Dec. 23, 1986, abandoned, which is a continuation of Ser. No. 469,738, Jan. 19, 1990, abandoned. This application Oct. 7, 1993, Ser. No. 135,841

Int. Cl.⁶ A61K *23/30;31/66;31/70;7/42*

U.S. Cl. 424—59 **12 Claims**

1. A composition comprising:

A. a first compound selected from the group consisting of a cosmetic agent and a pharmaceutical agent for topical treatment of dermatological disorders;

B. an amphoteric or pseudoamphoteric agent

wherein said amphoteric or pseudoamphoteric agent comprises at least one member selected from the group consisting of amino acid, dipeptide, creatine, aminoaldonic acid, aminouronic acid, lauryl aminopropylglycine, aminoaldaric acid, neuraminic acid, desulfated heparin, deacetylated hyaluronic acid, hyalobiuronic acid, chondrosine, deacetylated chondroitin, creatinine, cocoamphoglycine, cocoamphopropionate, cocoamphopropylsulfonate, phosphandyl ethanolamine, glycine, alanine, valine, leucine, isoleucine, serine, threonine, cysteine, cystine, methionine, asparagine, glutamine, arginine, lysine, 5-hydroxylysine, histidine, phenylalanine, ryrosine, tryptophan, 3-hydroxproline, 4 -hydroxypropoline, proline, homocysteine, homocystine, homoserine, ornithine, citrulline, phosphatidylserine, and sphingomyelin, said amphoteric or pseudoamphoteric agent being present in a concentration effective to form an amphoteric or pseudoamphoteric system with an alpha hydroaxacid, alpha ketoacid or related compound;

C. an alpha hydroxyacid, an alpha ketoacid or a related compound present in a therapeutically effective amount in a pharmaceutically acceptable vehicle for topical treatment of disorders wherein,

said related compound is selected from the group consisting of ascorbic acid, quinic acid, isocitric acid, tropic acid, trethocanic acid, 3-chlorolactic acid, cerebronic acid, citramalic acid, agaricic acid, 2-hydroxynervonic acid, aleuritic acid and pantoic acid,

wherein said alpha hydroxyacid is at least one member selected from the group consisting of alkyl alpha hydroxyacid, aralkyl alpha hydroxyacid, aryl alpha hydroxyacid, polyhydroxy alpha hydroxyacid and polycarboxylic alpha hydroxyacid having the following structure:

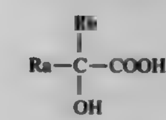

wherein Ra is H, F, Cl, Br, alkyl, aralkyl or aryl group of saturated or unsaturated, isomeric or nonisomeric, straight or branched chain, having 1 to 25 carbon atoms, or cyclic form having 5 or 6 ring members, and in addition Ra may carry OH, CHO, COOH and alkoxy group having 1 to 9 carbon atoms, said alpha hydroxyacid existing as a free acid or lactone form, or in salt form with an organic base or an inorganic alkali, and as stereoisomers as D, L, and DL forms when Ra and Rb are not identical,

said alpha ketoacid being at least one member selected from a group of compounds represented by the following chemical structure:

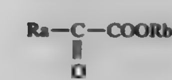

wherein Ra and Rb are H, alkyl, aralkyl or aryl group of saturated or unsaturated, isomeric or nonisomeric, straight or branched chain, having 1 to 25 carbon atoms, or cyclic form having 5 or 6 ring members, and in addition Ra may carry F, Cl, Br, I, OH, CHO, COOH and alkoxy group having 1 to 9 carbon atoms, said alpha ketoacid existing as a free acid or ester form, or in salt form with an organic base or an inorganic alkali; and

wherein said composition has a pH less than or equal to 4.2.

5,702,689

USE OF AN ORGANOFLUORINE HYDROCARBON COMPOUND AS A BINDER FOR COSMETIC POWDER COMPOSITIONS, AND COMPOSITION CONTAINING SAID COMPOUND

Sylvie Mondon-Rossignol, and Béatrice Defossez, both of Paris, France, assignors to L'Oreal, Paris, France

PCT No. PCT/FR94/00616, § 371 Date Jan. 26, 1995, § 102(e) Date Jan. 26, 1995, PCT Pub. No. WO94/27559, PCT Pub. Date Dec. 8, 1994

PCT Filed May 25, 1994, Ser. No. 374,716

Claims priority, application France, May 26, 1993, 93/06326

Int. Cl.⁶ A61K *7/021;7/031*

U.S. Cl. 424—63 **7 Claims**

1. A cosmetic powder composition constituted by a particulate phase comprising pigments and/or fillers and a greasy phase, wherein the greasy phase represents 1.01% to 35% by weight of the total composition weight and comprises 0.1% to 15% by weight of at least one organofluorine hydrocarbon compound having a ratio of hydrogen atoms bonded to carbon atoms substituted by fluorine atoms ranging from 0.5% to 95%, and 98.99% to 65% by weight of a particulate phase free of fluorine compound comprising pigments and/or fillers, the organofluorine hydrocarbon compound having formula (I):

$$(R_F)_x—(A)_y—(R_H)_z \qquad (I)$$

where:

x represents 1, 2 or 3, y represents 0 or 1, and z represents 0, 1, 2 or 3, provided that y and z are not simultaneously zero and that when z is 0, x is 2 or 3;

R_F represents an aliphatic or aromatic, saturated or unsaturated, linear, branched or cyclic fluorinated radical, in which the chain may be functionalized and/or interrupted by a divalent oxygen or sulfur atom, or a trivalent nitrogen atom and/or substituted by hydrogen atoms or halogen atoms other than fluorine atoms, provided that for any two carbon atoms of the backbone, no more than one of these substituents other than fluorine is present;

R_H represents an aliphatic or aromatic, saturated or unsaturated, linear, branched or cyclic hydrocarbon radical, in which the chain may be functionalized and/or interrupted by one or more divalent oxygen or sulfur atoms, or one or more trivalent nitrogen atoms; and

A represents a di-, tri- or tetravalent radical selected from the group consisting of:

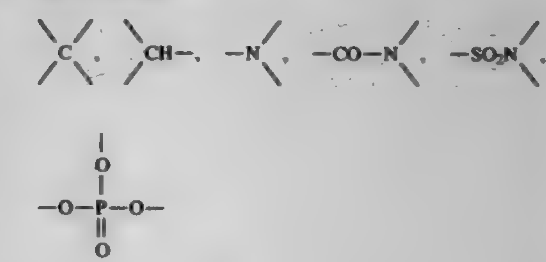

and ethylenic unsaturations.

5,702,690

COMPOSITION FOR WASHING AND ANTIDANDRUFF TREATMENT OF HAIR AND THE SCALP, BASED ON SELENIUM SULPHIDE AND NONIONIC SURFACTANT OF THE POLYGLYCEROLATED OR ALKYLPOLYGLYCOSIDE TYPE

Claude Dubief, Le Chesnay, and Danièle Cauwet, Paris, both of France, assignors to L'Oreal, Paris, France

Continuation of Ser. No. 917,392, Jul. 23, 1992, abandoned. This application Mar. 30, 1995, Ser. No. 414,139

Claims priority, application France, Jul. 25, 1991, 91 09450

Int. Cl.⁶ A61K *7/06;7/075*

U.S. Cl. 424—70.1 **11 Claims**

1. Cosmetic composition for washing and antidandruff treatment of hair and the scalp containing in an aqueous medium at least:

a) from 0.1 to 5% by weight of selenium sulphide in suspension;

b) from 5 to 50% by weight of a polyglycerolated or alkylpolyglycoside nonionic surfactant selected from the group consisting of:

(A) compounds prepared by condensation, using acid catalysis, of 2 to 10 moles of glycidol per mole of alcohol or alpha diol containing 10 to 14 carbon atoms, at a temperature of 50° to 120° C.; and

(B) compound corresponding to the following formula:

$$RO(C_6H_{10}O_5)_x—H \qquad (VII)$$

which has the expanded structure (VIII):

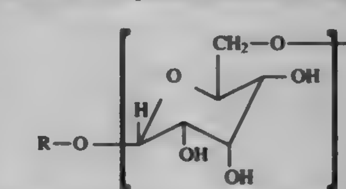

(VIII)

in which R denotes a C_8–C_{24} straight- or branched-chain alkyl or alkenyl radical or a mixture of C_8–C_{24} straight- or branched-chain alkyl or alkenyl radicals and x is a number from 1 to 15; and

c) from 0.2 to 5% by weight of a suspending agent consisting essentially of xanthan gum or scleroglucan gum;

the percentages by weight being determined relative to the total weight of the composition.

5,702,691

FLAVANONOL DERIVATIVES AND HAIR-NOURISHING, HAIR GROWING COMPOSITIONS CONTAINING THE DERIVATIVES

Susumu Ichinose, Ishibashi-machi; Yoshinori Nishizawa, Utsunomiya; Atsushi Ohuchi, Ichikai-machi; Hideshi Kidena, Chiba, and Mitsuyuki Hotta, Ujiie-machi, all of Japan, assignors to Kao Corporation, Tokyo, Japan

PCT No. PCT/JP95/02433, § 371 Date Sep. 16, 1996, § 102(e) Date Sep. 16, 1996, PCT Pub. No. WO96/16956, PCT Pub. Date Jun. 6, 1996

PCT Filed Nov. 29, 1995, Ser. No. 682,568

Claims priority, application Japan, Dec. 2, 1994, 6-299222; Dec. 2, 1994, 6-299223

Int. Cl.[6] **A61K** *7/06;* **C07D** *311/32*

U.S. Cl. 424—70.1 **13 Claims**

1. A hair nourishing composition, comprising:

an amount sufficient to nourish hair of a flavanonol derivative represented by the following formula (1):

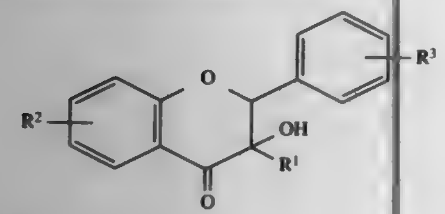

(1)

wherein

R^1 is an alkyl group,

R^2 is selected from the group consisting of a hydrogen atom, an alkyl group, an alkyl group having a substituent, an alkoxyl group, an alkoxyl group having a substituent, a hydroxyl group, a cyano and a halogen atom,

R^3 is selected from the group consisting of a hydrogen atom, an alkyl group, an alkyl group having a substituent, an alkoxyl group, an alkoxyl group having a substituent, a hydroxyl group, a cyano and a halogen atom; and

at least one additional ingredient selected from the group consisting of blood flow accelerators, antibacterial agents, keratolytic agents, antiseborrheal agents, local stimulators, anti-inflammation agents, humectants, anti-androgen agents, and follicle activating agents.

5,702,692

HAIR COMPOSITION

Eugene E. Hardy, Freehold, and Anthony Psihoules, Somerville, both of N.J., assignors to Colgate-Palmolive Company, New York, N.Y.

Filed Mar. 3, 1997, Ser. No. 808,766

Int. Cl.[6] **A61K** *6/00*

U.S. Cl. 424—70.1 **15 Claims**

1. A sprayable hair fixing composition having the following components or reaction products comprising

a) from about 0.5 to about 10 wt. % of a high molecular weight copolymer of polyvinylpyrrolidine and vinylacetate, the weight average molecular weight of said polymer being at least about 200,000,

b) from about 0.5 to about 8 wt. % of at least about 80 wt. % neutralized copolymer of tertiary butylacrylate, ethyl acrylate and methacrylic acid, and

c) a solvent system compatible with the combination of copolymer a and copolymer b, the wt. % of a and b in the range of about 1:4 to about 4:1.

5,702,693

GYPSUM REMOVAL COMPOSITION AND METHOD OF REMOVING GYPSUM FROM SKIN

Donald L. Simmons, Pierrefonds, Canada, assignor to Draxis Health Inc., Mississauga, Canada

Filed Dec. 7, 1995, Ser. No. 568,510

Int. Cl.[6] **A61K** *7/025;7/035;31/74*

U.S. Cl. 424—78.03 **36 Claims**

1. A method for removal of gypsum from the gypsum skin of patient comprising the steps of:

(i) applying to the skin of a patient an aqueous liquid composition consisting essentially of a water-miscible organic solvent, from about 1.7 to about 5.0 percent by weight of an organic acid having a pK_a in the range of from about 1.0 to about 5.0 and from about 0.5 to about 5.0 percent by weight of an emollient, the liquid composition having a pH in the range of from about 2.0 to about 5.0,

(ii) dissolving the gypsum in the aqueous liquid composition; and

(iii) removing the aqueous liquid composition containing dissolved gypsum from the skin of the patient.

5,702,694

COMPOSITIONS FOR TREATING CORNS, CALLUSES AND WARTS

Thomas W. Chamness, Memphis, Tenn., assignor to Schering-Plough HealthCare Products, Inc.

PCT No. PCT/US94/08315, § 371 Date Feb. 12, 1996, § 102(e) Date Feb. 12, 1996, PCT Pub. No. WO95/05156, PCT Pub. Date Feb. 23, 1995

Continuation-in-part of Ser. No. 107,553, Aug. 17, 1993. This PCT application Aug. 11, 1994, Ser. No. 596,219

Int. Cl.[6] **A61K** *7/135;31/34;* **A01N** *43/04;25/00*

U.S. Cl. 424—78.03 **12 Claims**

1. A topical composition comprising a about 2 to about 64% of a compound selected from the group consisting of hydroquinone; olivetol, pyrocatechol and nordihydroguaiaretic acid and a pharmaceutically acceptable carrier material wherein said carrier material is flexible collodion.

5,702,695

OSSEOINTEGRATION PROMOTING IMPLANT COMPOSITION, IMPLANT ASSEMBLY AND METHOD THEREFOR

Cameron Malcolm Lang Clokie, Westmount, Canada, assignor to McGill University, Canada

PCT No. PCT/CA94/00626, § 371 Date Jun. 16, 1995, § 102(e) Date Jun. 16, 1995, PCT Pub. No. WO95/13099, PCT Pub. Date May 18, 1995

PCT Filed Nov. 14, 1994, Ser. No. 481,501

Int. Cl.[6] **A61K** *31/765;* **A61C** *13/00*

U.S. Cl. 424—78.08 **11 Claims**

1. An osseointegration promoting implant composition having a liquid form adapted to be injected in a bore in a bone prior to insertion of an implant in the bore, said liquid form readily flowing along an interspace between said bore and said implant of 10 to 100 microns width, said composition consisting essentially of a transforming growth factor β (TGF-β) in a liquid carrier, said liquid carrier being gelable at about 37° C., said TGF-β being present in said liquid carrier in an amount effective to promote osseointegration at the interface between the bore and the bone for the implant, and an outer surface of the implant; said composition having a liquid state at a temperature other than normal body temperature, said liquid carrier being effective in gel form at about 37° C. to prevent settling of the TGF-β in the composition and provide slow and sustained release of the TGF-β, at the interface

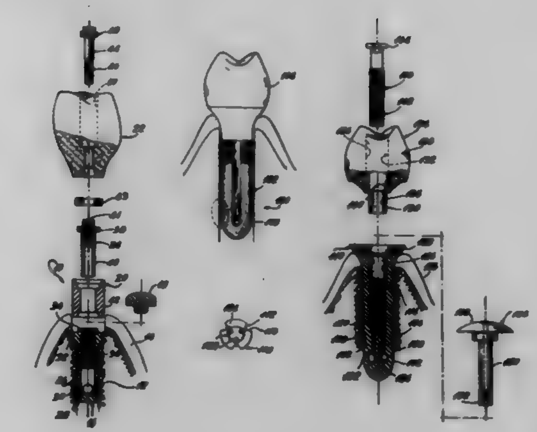

between the bore in the bone for the implant, and the outer surface of the implant, said liquid carrier consisting essentially of an inversely soluble polyoxyalkylene block copolymer having a molecular weight of at least 1000 and bearing terminal hydroxyl groups, in an aqueous medium.

5,702,696

IRON-BINDING POLYMERS FOR ORAL ADMINISTRATION

W. Harry Mandeville, III, Lynnfield, and Stephen Randall Holmes-Farley, Arlington, both of Mass., assignors to GelTex Pharmaceuticals, Waltham, Mass.

Continuation-in-part of Ser. No. 65,546, May 20, 1993, Pat. No. 5,487,888. This application Dec. 6, 1995, Ser. No. 567,933

Int. Cl.[6] **A61K** *31/785*

U.S. Cl. 424—78.12 **35 Claims**

1. A method for removing iron from a patient comprising orally administering to said patient a therapeutically effective amount of a composition comprising at least one hydrophilic cross-linked aliphatic amine polymer.

5,702,697

TREATMENT FOR BIOLOGICAL DAMAGE USING A COLONY STIMULATING FACTOR AND A BIOLOGICAL MODIFIER

Robert Zimmerman, Lafayette, and Benedict J. Marafino, Jr., San Francisco, both of Calif., assignors to Chiron Corporation, Emeryville, Calif.

Continuation of Ser. No. 289,844, Aug. 12, 1994, Pat. No. 5,508,031, which is a continuation of Ser. No. 49,070, Apr. 16, 1993, abandoned, which is a continuation of Ser. No. 626,975, Dec. 12, 1990, abandoned, which is a division of Ser. No. 399,386, Aug. 25, 1989, Pat. No. 4,985,241, which is a continuation of Ser. No. 113,643, Oct. 26, 1987, abandoned, which is a continuation-in-part of Ser. No. 933,475, Nov. 21, 1986, abandoned. This application Jun. 1, 1995, Ser. No. 457,629

Int. Cl.[6] **A61K** *38/19;* **C07K** *14/53*

U.S. Cl. 424—85.1 **32 Claims**

1. A method for the therapeutic or prophylactic treatment of biological damage to a mammalian host, said damage caused by free radical generation, which method comprises administering to the host in need of such treatment therapeutically effective amounts of a colony stimulating factor from a mammalian species and at least one biological modifier selected from the group consisting of a free radical scavenger and a metabolic inhibitor.

5,702,698

METHODS OF USE OF IL-1α

Satoru Nakai; Mayumi Kaneta; Yoshikazu Kikumoto, all of Tokushima-ken; Yeong-Man Hong, Naruto; Kazuyoshi Kawai, Tokushima-ken; Setsuko Takegata, Tokushima; Kiyoshi Ishii, Tokushima-ken; Yasuo Yanagihara, Tokushima, and Yoshikatsu Hirai, Tokushima-ken, all of Japan, assignors to Otsuka Pharmaceutical Co., Ltd., Tokyo, Japan

Division of Ser. No. 252,229, Jun. 1, 1994, Pat. No. 5,543,143, which is a division of Ser. No. 643,292, Jan. 22, 1991, Pat. No. 5,371,204, which is a division of Ser. No. 23,373, Mar. 9, 1987, Pat. No. 5,008,374. This application Jun. 5, 1995, Ser. No. 461,733

Claims priority, application Japan, Mar. 14, 1986, 61-57885; Jun. 3, 1986, 61-129759; Jun. 25, 1986, 61-148393; Jul. 8, 1986, 61-160250; Aug. 27, 1986, 61-200323

Int. Cl.[6] **A61K** *38/20*

U.S. Cl. 424—85.2 **1 Claim**

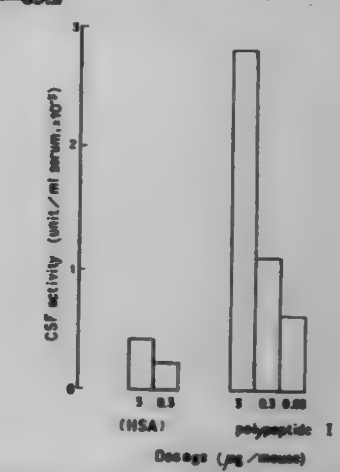

1. A method for promoting production of colony stimulating factor comprising administering, to a subject in need of promotion of production of colony stimulating factor, a pharmaceutically effective amount of purified IL-1α having an amino acid sequence represented by formula (A):

formula (A)

5 10
Ser—Ala—Pro—Phe—Ser—Phe—Leu—Ser—Asn—Val—

15 20
Lys—Tyr—Asn—Phe—Met—Arg—Ile—Ile—Lys—Tyr—

25 30
Glu—Phe—Ile—Leu—Asn—Asp—Ala—Leu—Asn—Gln—

35 40
Ser—Ile—Ile—Arg—Ala—Asn—Asp—Gln—Try—Leu—

45 50
Thr—Ala—Ala—Ala—Leu—His—Asn—Leu—Asp—Glu—

55 60
Ala—Val—Lys—Phe—Asp—Met—Gly—Ala—Tyr—Lys—

65 70
Ser—Ser—Lys—Asp—Asp—Ala—Lys—Ile—Thr—Val—

75 80
Ile—Leu—Arg—Ile—Ser—Lys—Thr—Gln—Leu—Tyr—

85 90
Val—Thr—Ala—Gln—Asp—Glu—Asp—Gln—Pro—Val—

95 100
Leu—Leu—Lys—Glu—Met—Pro—Glu—Ile—Pro—Lys—

105 110
Thr—Ile—Thr—Gly—Ser—Glu—Thr—Asn—Leu—Leu—

115 120
Phe—Phe—Trp—Glu—Thr—His—Gly—Thr—Lys—Asn—

-continued

125 130
Tyr—Phe—Thr—Ser—Val—Ala—His—Pro—Asn—Leu—

135 140
Phe—Ile—Ala—Thr—Lys—Gln—Asp—Tyr—Trp—Val—

145 150
Cys—Leu—Ala—Gly—Gly—Pro—Pro—Ser—Ile—Thr—

155
Asp — Phe — Gln — Ile — Leu — Glu — Asn — Gln — Ala.

5,702,699

PROCESS FOR THE RECOVERY OF LIPOPHILIC PROTEINS

Wolfgang H. Hanisch, Oakland, and Peter Fernandes, Walnut Creek, both of Calif., assignors to Cetus Corporation, Emeryville, Calif.

Continuation of Ser. No. 103,954, Aug. 10, 1993, abandoned, which is a continuation of Ser. No. 870,155, Apr. 14, 1992, abandoned, which is a continuation-in-part of Ser. No. 592,077, Mar. 22, 1984, abandoned, which is a division of Ser. No. 495,896, May 18, 1983, Pat. No. 4,462,940, which is a continuation-in-part of Ser. No. 422,421, Sep. 19, 1982, abandoned. This application Jun. 7, 1995, Ser. No. 474,768

Int. Cl.⁶ A61K *38/21*

U.S. Cl. 424—85.6 **14 Claims**

1. A pharmaceutical composition comprising a therapeutically effective amount of unglycosylated recombinant human interferon-β (IFN-β) dissolved in a non-toxic, therapeutically compatible aqueous-based carrier medium comprising as a stabilizer at pH of 6.8 to 7.8 wherein said stabilizer comprises human serum albumin wherein the composition is produced by a process comprising:

1) recovering the recombinant human IFN-β from a bacterial host transformed to produce it;
2) isolating and purifying the recombinant human IFN-β in a solution containing a solubilizer;
3) adjusting the pH of the solution to about 10.5 to 12.5;
4) diafiltering the solution at a pH of about 10.5 to 12.5 against pure water or water/aliphatic alcohol mixtures adjusted to a pH of about 11 to remove free or IFN-β-bound solubilizer.
5) adding an aqueous-based carrier medium of a pH of about 10.5 to 12.5 to the diafiltered solution containing the recombinant human IFN-β;
6) maintaining the resulting solution at a pH of about 10.5 to 12.5 for 1 to 15 minutes;
7) lowering the pH of the resulting solution to between about 6.8 and 7.8;

wherein the pharmaceutical composition contains less than 10 ppm of solubilizer when the solubilizer is sodium dodecyl sulfate, and wherein the stabilizer in the aqueous-based carrier medium is effective to stabilize the recombinant human IFN-β against denaturation and loss of biological activity and to prevent precipitation of the recombinant human IFN-β from aqueous-based carrier medium.

5,702,700

SERTOLI CELLS AS NEURORECOVERY INDUCING CELLS FOR PARKINSON'S DISEASE

Paul R. Sanberg, Spring Hill; Don F. Cameron, and Cesario V. Borlongan, both of Lutz, all of Fla., assignors to University of South Florida, Tampa, Fla.

Filed Mar. 13, 1995, Ser. No. 403,389

Int. Cl.⁶ A01N *63/00;* **A61K** *35/52;38/22*

U.S. Cl. 424—93.1 **1 Claim**

1. A method of generating in situ trophic factors for ameliorating behavioral deficits caused by Parkinson's Disease by transplanting sertoli cells utilizing stereotaxic delivery into the brain of an adult a mammal who suffers from Parkinson's Disease, ", wherein said Sertoli cells express trophic factors comprising growth factors and immunosuppressive factors."

5,702,701

TREATMENT OF SOIL AND PLANTS WITH A COMPOSITION CONTAINING *BACILLUS LATEROSPORUS*

Boyd O'Donnell, San Marcos, Calif., assignor to The O'Donnell Family Investment Trust, San Marcos, Calif.

Continuation-in-part of Ser. No. 236,701, Apr. 28, 1994, Pat. No. 5,455,028, which is a continuation of Ser. No. 908,631, Jul. 1, 1992, abandoned, which is a continuation of Ser. No. 621,603, Dec. 4, 1990, abandoned. This application Jun. 7, 1995, Ser. No. 484,784

Int. Cl.⁶ C12N *1/20*

U.S. Cl. 424—93.46 **20 Claims**

1. A method for improving the quality of soil for agronomic purposes, comprising the step of applying to the soil an effective amount of a composition comprising *Bacillus laterosporus* strain BOD having all of the identifying characteristics of ATCC Accession Number 55122.

5,702,702

MODIFIED CYTOTOXIC TALL CELL LINE AND COMPOSITIONS AND METHODS FOR MANUFACTURE AND USE THEREOF AS THERAPEUTIC REAGENTS FOR CANCER

Daniela Santoli; Giovanni Rovera, both of Bryn Mawr, and Alessandra Cesano, Philadelphia, all of Pa., assignors to The Wistar Institute of Anatomy and Biology, Philadelphia, Pa.

Continuation-in-part of Ser. No. 374,289, Jan. 18, 1995, which is a continuation-in-part of Ser. No. 63,188, May 14, 1993, abandoned, which is a continuation-in-part of Ser. No. 859,927, Mar. 30, 1992, Pat. No. 5,272,082. This application Jun. 6, 1995, Ser. No. 472,686

Int. Cl.⁶ A01N *63/00;* **C12N** *5/00;5/08;* **A61K** *31/00*

U.S. Cl. 424—93.71 **8 Claims**

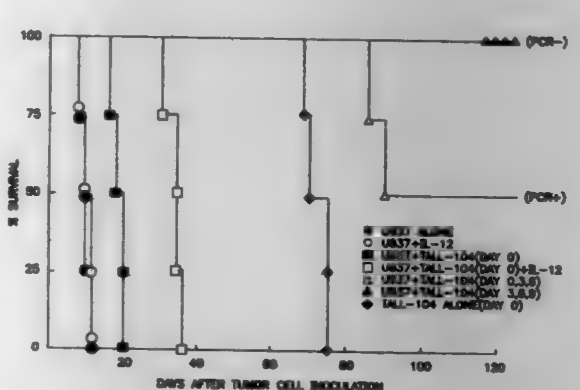

1. A method for adoptive therapy useful in the treatment of cancer comprising administering to a mammalian patient an effective amount of a TALL-104 cell, ATCC Accession No. CRL11386, which has been modified by treatment in vitro with one or a combination of IL-2 and IL-12 to enhance its cytotoxicity and gamma-irradiated at a dose suitable to irreversibly arrest cell proliferation but retain its cytotoxic activity in vitro and in vivo, in combination with an effective dose of an immunosuppressive agent that will not suppress the cytotoxic function of the cell but will suppress the patient's immune function.

5,702,703

***BACILLUS THURINGIENSIS* TOXIN ENHANCER**

H. Ernest Schnepf; Brian Stockhoff, both of San Diego, and Mark Knuth, Poway, all of Calif., assignors to Mycogen Corporation, San Diego, Calif.

Filed Nov. 16, 1994, Ser. No. 340,563

Int. Cl.⁶ A01N *63/00;* **C05F** *11/08;* **C12N** *1/00*

U.S. Cl. 424—93.461 **11 Claims**

1. A method of enhancing the activity of a pesticide which comprises applying the pesticide in combination with zwittermicin A, zwittermicin Ac, or mixtures thereof in pesticidal-enhancing amounts.

5,702,704

ANTIBODIES TO IN VIVO ADVANCED GLYCOSYLATION ENDPRODUCTS

Richard J. Bucala, New York, N.Y., assignor to The Rockefeller University, New York, N.Y.

Division of Ser. No. 956,849, Oct. 1, 1992, which is a continuation-in-part of Ser. No. 811,579, Dec. 20, 1991, abandoned. This application Jun. 7, 1995, Ser. No. 486,513

Int. Cl.⁶ C07K *16/18;* **A61K** *39/395*

U.S. Cl. 424—137.1 **15 Claims**

1. A pharmaceutical composition containing an anti-AGE antibody in combination with a pharmaceutically acceptable carrier;

wherein said anti-AGE antibody is reactive with in vivo-produced advanced glycosylation endproducts and has the following characteristics:

i. it reacts with an immunological epitope common to said in vivo-formed advanced glycosylation endproducts;
ii. it is cross reactive with advanced glycosylation endproducts formed in vitro; and
iii. it is not cross reactive with the following model advanced glycosylation endproducts however formed: 2-(2-furoyl)-4(5)-(2-furanyl)-1H-imidazole (FFI), 1-alkyl-2-formyl-3,4-diglycosyl pyrrole (AFGP), 5-hydroxymethyl-1-alkylpyrrole-2-carbaldehyde (pyrraline), carboxymethyllysine, and pentosidine, wherein reactivity is detected in a competitive immunosorbent assay format, wherein bovine serum albumin (BSA)-AGE obtained by incubation of BSA with glucose is adsorbed to said solid phase, and said model AGE is tested as the inhibitor of binding of said antibody to said BSA-AGE.

5,702,705

ANTIBODY METHODS FOR THE TREATMENT OF A HORMONE-MEDIATED DISEASE

Michael Kriegler, San Francisco, and Carl Perez, Berkeley, both of Calif., assignors to Chiron Corporation, Emeryville, Calif.

Division of Ser. No. 424,243, Apr. 18, 1995. This application Jun. 5, 1995, Ser. No. 463,892

Int. Cl.⁶ A61K *39/395;* **C07K** *16/00;16/26;16/24*

U.S. Cl. 424—145.1 **8 Claims**

1. A method for prophylactically or therapeutically treating a patient for a disease caused by the presence of a mature hormone in said patient, said mature hormone comprising a 15 kd or a 17 kd TNF and being produced by the protease cleavage of a prohormone form of said mature hormone, said prohormone form comprising a 26 kd TNF, said cleavage being at a prohormone cleavage site, said method comprising administering said patient an effective amount of a monoclonal antibody or an antigen binding fragment thereof that binds to said prohormone TNF at said cleavage site to sterically hinder access of said protease to said cleavage site, thereby preventing or inhibiting formation of said mature hormone TNF.

5,702,706

Patent Not Issued For This Number

5,702,707

DIAGNOSTIC METHOD AND TEST KIT FOR THE SEROLOGICAL DETECTION OF THE AIDS VIRUS

Allan L. Goldstein, Washington, D.C., and Su Sun Wang, Belmont, Calif., assignors to Viral Technologies, Inc., Alexandria, Va.

Continuation of Ser. No. 884,153, May 18, 1992, which is a continuation of Ser. No. 577,672, Sep. 5, 1990, abandoned, which is a division of Ser. No. 300,176, Jan. 23, 1989, Pat. No. 4,983,387, which is a continuation of Ser. No. 64,599, May 19, 1986, abandoned. This application Jun. 7, 1995, Ser. No. 476,555

Int. Cl.⁶ A61K *39/12;39/21;* **G07K** *1/00*

U.S. Cl. 424—208.1 **9 Claims**

1. A peptide of at least about 18 and up to about 40 amino acids including the sequence extending from position 92 to position 109 of the p17 gag protein of HIV-1 and wherein the sequence may be extended from either or both the N-terminal and the C-terminal to include one or more additional consecutive amino acids of the p17 protein of HIV-1, wherein the total number of amino acids in said peptide does not exceed about 40.

5,702,708

SALMONICIDA IRON REGULATED PROTEIN AND LIPOPOLYSACCHARIDE VACCINE

Anthony E. Ellis, Aberdeen, Scotland, assignor to The Secretary of State for Scotland in Her Britannic Majesty's Government of the United Kingdom of Great Britain and Northern Ireland, London, England

PCT No. PCT/GB92/01016, § 371 Date Jan. 4, 1994, § 102(e) Date Jan. 4, 1994, PCT Pub. No. WO92/21370, PCT Pub. Date Dec. 10, 1992

PCT Filed Jun. 5, 1992, Ser. No. 157,154

Claims priority, application United Kingdom, Jun. 7, 1991, 9112310

Int. Cl.⁶ A61K *39/106;39/02;39/00;* **A01N** *63/00*

U.S. Cl. 424—261.1 **8 Claims**

2. A method of protecting fish from or treating fish having an *Aeromonas salmonicida* evoked disease comprising administering to said fish an effective amount of iron regulated outer membrane proteins and external lypolysaccharides as a vaccine active component.

5,702,709

SKIN ALLERGEN AND IRRITANT BARRIER LOTION

Anthony A. Schulz, Floyds Knobs, Ind., and David J. Buddrus, Dallas, Tex., assignors to Envirederm Pharmaceuticals, Inc., Louisville, Ky.

Filed Apr. 18, 1995, Ser. No. 423,099

Int. Cl.⁶ A61K *9/48*

U.S. Cl. 424—401 **14 Claims**

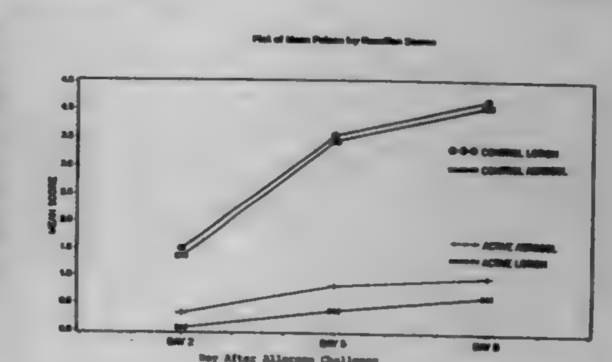

1. A lotion for protecting the skin from contact with allergens and irritants consisting essentially of

quaternium-18 bentonite	3.0–10.0%
volatile alcoholic solvent	20.0–30.0%
loweralkyl ester of a lower dibasic acid	15.0–25.0%
colloidal clay thickener selected from the group consisting of naturally occurring montmorillonite, bentonite, beidellite, hectorite, saponite and stevensite	2.0–10.0%
water	q.s.p. 100.0%

wherein all percentages are by weight.

14. A lotion for protecting the skin from contact with allergens and irritants comprising

quaternium 18 bentonite	5.0%
cosmetically acceptable denatured ethanol	25.0%
diisopropyl adipate	20.0%
bentonite	5.0%
methyl paraben	0.100%
benzyl alcohol	0.200%
purified water	44.7%

5,702,710

DIBENZOFURAN COMPOUNDS AND PHARMACEUTICAL/COSMETIC COMPOSITIONS COMPRISED THEREOF

Bruno Charpentier, Biot; Michèle Vion, Grasse Le Plan; Bruno Bernard, Neuilly Sur Seine, and Jean Maignan, Tremblay En France, all of France, assignors to Centre International de Recherches Dermatologiques Galderma, Valbonne, France

Filed Oct. 4, 1995, Ser. No. 539,222

Claims priority, application France, Oct. 4, 1994, 94 11853; Oct. 28, 1994, 94 12989

Int. Cl.⁶ A61K *7/48;* **C07D** *307/79*

U.S. Cl. 424—401 **28 Claims**

1. A dibenzofuran compound having the structural formula (I):

(I)

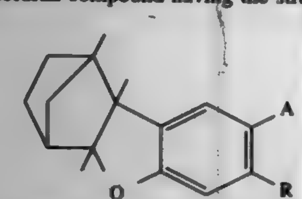

in which R is a hydrogen atom, a halogen atom, a lower alkyl radical having 1 to 6 carbon atoms, a lower acyl radical having 1 to 10 carbon atoms or an OR' radical; A is a radical selected from the group consisting of the following formulae (IIa-IIc):

(IIa)

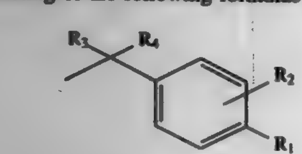

(IIb)

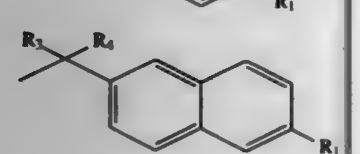

-continued

(IIc)

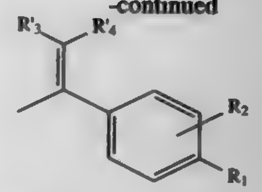

wherein R_1 is
(i) a hydrogen atom,
(ii) the $—CH_3$ radical,
(iii) an $—CH_2—O—R_5$ radical,
(iv) an $—OR_5$ radical
(v) a

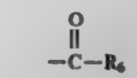

radical, or
(vi) an $—S(O)_tR_6$ radical; R_2 is a hydrogen atom or an $—OR_5$ radical; R_3 and R_4 are independently a hydrogen atom, a lower alkyl radical having 1 to 6 carbon atoms or a $—(X)_n—(CH_2)_m—R_7$ radical, or R_3 and R_4 may together form an oxo (=O) group, a thioxo (=S) group, an oxime group or a group derived from the oxime ($R_6—O—N=$), an epoxy group, or a dioxolane group ($—O—(CH_2)_q—O—$) wherein q is equal to 2 or 3; R_3' and R_4' are independently a hydrogen atom, a lower alkyl radical having 1 to 6 carbon atoms or a lower acyl radical having 1 to 6 carbon atoms; t is equal to 0, 1 or 2; R_5 is a hydrogen atom, a lower alkyl radical having 1 to 6 carbon atoms, or a lower acyl radical having 1 to 6 carbon atoms; R_6 is a hydrogen atom, an $—N(R',R'')$ radical, or an $—OR_8$ radical; R_6 is a hydrogen atom or a $—(CO)_p—R_9$ radical, wherein p is 0 or 1; R_8 and R' are independently a hydrogen atom, an alkyl radical having from 1 to 20 carbon atoms, a mono- or polyhydroxyalkyl radical respectively having 1 to 6 or 2 to 6 carbon atoms, an optionally substituted phenyl radical or optionally substituted benzyl or phenethyl radical wherein the substituents on said phenyl, benzyl or phenethyl radical, if present, are selected from the group consisting of halogen, hydroxyl, nitro and methoxy groups; R_9 is a hydrogen atom, an alkyl radical, having 1 to 20 carbon atoms, an alkenyl radical which is a linear or branched radical having 1 to 20 carbon atoms and having at least one ethylenic double bond, an alkynyl radical, which is a linear or branched radical having 1 to 20 carbon atoms and having at least one acetylenic double bond, a phenyl radical, an $—OR_7$ radical wherein m is other than 0, or an $—N(R',R'')$ radical; R' and R'', which may be identical or different, are each a hydrogen atom, a lower alkyl radical having 1 to 6 carbon atoms, a mono- or polyhydroxyalkyl radical respectively having 1 to 6 or 2 to 6 carbon atoms, an optionally substituted phenyl radical, an optionally substituted benzyl or phenethyl radical wherein the substituents on said phenyl, benzyl or phenethyl radical, if present, are selected from the group consisting of halogen, nitro, hydroxyl and methoxy group; X is an oxygen or sulfur atom; and n ranges from 0 to 1 and m from 0 to 10; or a pharmaceutically/cosmetically acceptable salt or optical or geometric isomer thereof.

5,702,711

METHOD FOR ENHANCING THE RATE OF SKIN PERMEATION OF LACTIC ACID THROUGH USE OF THE L-ENANTIOMER

Prakash Parab, Williamsville, N.Y., assignor to Bristol-Myers Squibb Company, New York, N.Y.

Continuation of Ser. No. 215,985, Mar. 22, 1994, abandoned. This application May 26, 1995, Ser. No. 452,483

Int. Cl.⁶ A61K *7/00;31/19*

U.S. Cl. 424—401 **13 Claims**

1. A method of increasing the rate of L-lactic acid permeation in mammalian skin comprising applying to said skin a composition containing a therapeutic amount of a mixture of an inorganic or

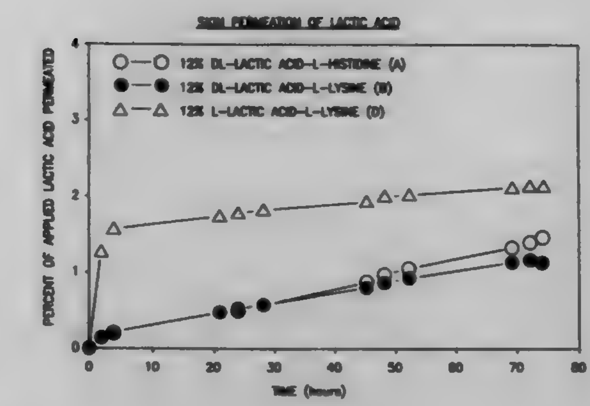

organic lactate salt in a dermatologically acceptable carrier, 100% by weight of the lactate salt being an L-lactate salt.

5,702,712

MELANOQUATERNARY COMPOUNDS AND THEIR USE AS HAIR DYES AND FOR SKIN TREATMENT

Gottfried Wenke, Woodbridge, Conn., and Giuseppe Prota, Naples, Italy, assignors to Clairol, Incorporated, Stamford, Conn.

Filed Dec. 6, 1995, Ser. No. 568,056

Int. Cl.⁶ A61K *7/48*

U.S. Cl. 424—401 **16 Claims**

1. A water soluble compound having the formula:

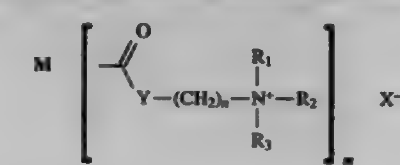

wherein
M is a melanin residue,
Y is —O— or —NH,
n is an integer from 1 to 20,
R_1, R_2 R_3 which may be the same or different are substituted or unsubstituted alkyl groups haing from 1 to 22 carbon atoms, the alkyl substituent being selected from the group consisting of halo, cyano, and nitro,
m is the number of derivatized carboxyl groups in the melanin residue, and
X is an anion.

5. A composition with a pH of from about 3 to about 10 for coloring hair or treating skin containing:
(a) a compound having the formula:

(I)

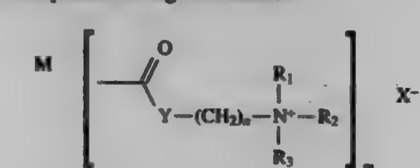

wherein
M is a melanin residue,
Y is —O— or —NH,
n is an integer from 1 to 20,
R_1, R_2 and R_3 which may be the same or different are substituted or unsubstituted alkyl groups having from 1 to 22 carbon atoms, the alkyl substituent being selected from the group consisting of halo, cyano, and nitro,
m is the number of derivatized carboxyl groups in the melanin residue, and
X is an anion,

said compound (a) being present in the composition in an amount effective to color hair or treat skin, and
(b) a cosmetically acceptable carrier.

14. A method of coloring hair which comprises contacting hair with an effective hair dyeing amount of a compound of the formula:

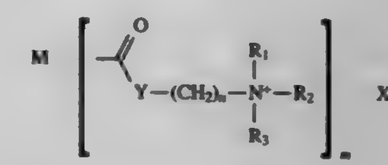

wherein
M is a melanin residue,
Y is —O— or —NH,
n is an integer from 1 to 20,
R_1, R_2 and R_3 which may be the same or different are substitued or unsubstituted alkyl groups having from 1 to 22 carbon atoms, the alkyl substituent being selected from the group consisting of halo, cyano, and nitro,
m is the number of derivatized carboxyl groups in the melanin residue, and
X is an anion.

5,702,713

MAKE-UP PRODUCT

Gérard Joulia, Paris, France, assignor to L'Oreal, Paris, France

Continuation of Ser. No. 238,055, May 4, 1994, abandoned. This application Feb. 14, 1996, Ser. No. 601,648

Claims priority, application France, Jun. 7, 1993, 93 06763

Int. Cl.⁶ A61K *7/00;7/021*

U.S. Cl. 424—401 **8 Claims**

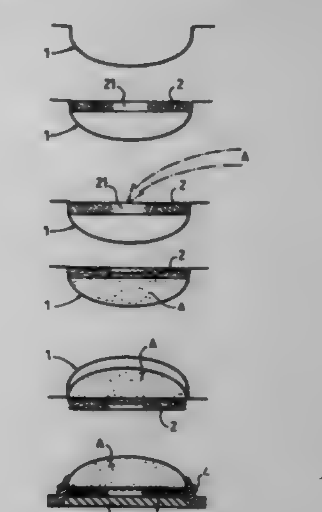

1. Molded make-up product obtained by the following process:
forming a mold including a concave molding surface and an upper component which closes a volume defined by the concave molding surface,
selecting the upper component to be a foam sheet having open cells, a first portion of the foam sheet facing the volume and a second, opposite portion;
adding a fluid make-up composition through the foam sheet and into the volume of the mold so as partly to impregnate the open cells of the first portion of the foam sheet with the composition;
solidifying the composition to form a solidified composition having a first useable surface from which make-up can be removed and a second, opposite surface,

wherein a bond is formed between the foam sheet and the composition, due to the liquid composition impregnating the cells and solidifying the composition after impregnation, and
wherein, the molded product obtained includes the solidified composition and the foam sheet, the foam sheet being bonded to the second opposite surface of the solidified composition, and flexibly supporting the solidified composition, and
separating the molded product from the molding surface to form the molded make-up product including both the solidified composition and the foam sheet bonded thereto,
wherein the molded make-up product formed has as outer surfaces the first useable surface from which the make-up can be removed, and the second portion of the foam sheet.

5,702,714
SKIN CONDITIONER
Louis Goss, 3007 Windy Knoll Ct., Rockville, Md. 20850
Continuation-in-part of Ser. No. 478,353, Jun. 7, 1995, abandoned. This application Apr. 3, 1996, Ser. No. 627,056
Int. Cl.^{6} A61K *7/48*
U.S. Cl. 424—401 **3 Claims**

1. A skin conditioner composition comprising an effective amount of the following constituents: d-alpha tocopherol liquid; PCL wax or solid; PCL oil; fumed silica; squalane; decyl oleate; wheat germ glyceride; a subcomposition of lecithin, butyl stearate, cocoyl hydrolyzed collagen, oleyl sarcosine, sesame oil and lanolin alcohol; ppg-26 oleate perfume; p-hydroxy benzyl benzoate; guaiazulene.

5,702,715
REINFORCED BIOLOGICAL SEALANTS
Victor V. Nikolaychik, Mequon; Brent A. Burdick, Brookfield, and Leonid V. Nikolaychik, Bayside, all of Wis., assignors to Drying Technology, Bayside, Wis.
Filed Oct. 27, 1995, Ser. No. 549,365
Int. Cl.^{6} A01N *25/34*
U.S. Cl. 424—402 **15 Claims**

1. A reinforced, prefabricated biological sealant, the sealant comprising:
a) a fibrinogen composition adapted to be applied to a treatment condition, and
b) a thrombin composition layered on the fibrinogen composition,
wherein at least one of the fibrinogen or thrombin composition comprises a reinforcement filler so that the sealant comprises a reinforcement filler, wherein the sealant has a critical pressure of at least 150 mm Hg at two minutes, and wherein the sealant is a solid film.

5,702,716
POLYMERIC COMPOSITIONS USEFUL AS CONTROLLED RELEASE IMPLANTS
Richard L. Dunn, and Arthur J. Tipton, both of Fort Collins, Colo., assignors to Atrix Laboratories, Inc., Fort Collins, Colo.
Continuation of Ser. No. 776,816, Oct. 15, 1991, abandoned. This application Jun. 2, 1993, Ser. No. 70,498
The portion of the term of this patent subsequent to Jul. 3, 2007, has been disclaimed.
Int. Cl.^{6} A61K *9/20*
U.S. Cl. 424—422 **8 Claims**

1. A thermoplastic polymer system suitable as a controlled release implant, comprising:
a solid, microporous matrix of a pharmaceutically acceptable, biodegradable thermoplastic polymer which is insoluble in aqueous medium or human or animal body fluids, a biologically active agent, and up to about 15% by weight of a pharmaceutically acceptable, water-insoluble, rate-retarding agent which retards the rate of release of the biologically active agent from the matrix up to 100 fold relative to its rate of release from the same matrix without the rate-retarding agent, and which imparts a Tg to the matrix of less than about 55° C., the weight being relative to the total weight of the matrix; and,
the microporous matrix being formed externally or in situ respectively by a process comprising combining a composition with the aqueous medium, or administering the composition directly into a body tissue or cavity having the human or animal body fluids;
the composition comprising the thermoplastic polymer, the biologically active agent, the rate-retarding agent and a pharmaceutically acceptable organic solvent in which the thermoplastic polymer, biologically active agent and rate-retarding agent are dissolved or dispersed, the organic solvent being miscible to dispersible in aqueous medium or human or animal body fluids;
the combining step or administering step resulting in diffusion of the organic solvent into the aqueous medium or body fluid and resulting in coagulation of the thermoplastic polymer to form the solid microporous matrix;
the thermoplastic polymer being selected from the group consisting of polylactides, polyglycolides, polycaprolactones, polyanhydrides, polyamides, polyurethanes, polyesteramides, polyothoesters, polydioxanones, polyacetals, polyketals, polycarbonates, polyorthocarbonates, polyphosphazenes, polyhydroxybutyrates, polyhydroxyvalerates, polyalkylene oxalates, polyalkylene succinates, poly(malic acid), poly(amino acids), and copolymers, terpolymers and any combination thereof, and the thermoplastic polymer having a molecular weight up to about 0.8 inherent viscosity; and,
the rate-retarding agent being selected from the group consisting of an ester of a mono, di or tricarboxylic acid, a polyhydroxy alcohol, a fatty acid, a fatty acid ester, an epoxidized oil, a sterol, a higher alkyl alcohol, and any mixture thereof.

5,702,717
THERMOSENSITIVE BIODEGRADABLE POLYMERS BASED ON POLY(ETHER-ESTER)BLOCK COPOLYMERS
Younsik Cha; Young Kweon Choi, both of Salt Lake City, Utah, and You Han Bae, Kwangju, Rep. of Korea, assignors to Macromed, Inc., Salt Lake City, Utah
Filed Oct. 25, 1995, Ser. No. 548,185
Int. Cl.^{6} A61K *9/10;9/16*
U.S. Cl. 424—425 **32 Claims**

1. An injectable biodegadable block copolymeric drug delivery liquid having reverse thermal gelation properties comprising an aqueous solution having uniformly contained therein between about 3 and 40% by weight of
(a) an effective amount of a drug intimately contained in
(b) a biodegradable block copolymer comprising

(I) less than 50% by weight of a hydrophobic A polymer block comprising a member selected from the group consisting of poly(α-hydroxy acids) and poly(ethylene carbonates) and
(ii) more than 50% by weight of a hydrophilic B polymer block comprising a polyethylene glycol; and
wherein said liquid is maintained at a temperature below the lower critical solution temperature of said block copolymer.

5,702,718
METHOD FOR APPLYING METAL-AMINO ACID COMPLEXES AS SUPPLEMENTS TO FEED
Ken W. Ridenour, Amurillo, Tex., assignor to K.E.R. Associates, Inc., Tex.
Filed Jul. 25, 1995, Ser. No. 507,663
Int. Cl.^{6} A23K *1/18*
U.S. Cl. 424—438 **9 Claims**

1. A method for applying feed supplements to feed, comprising: preparing an aqueous composition containing a metal-amino acid complex and applying the aqueous composition to the feed at a local site wherein the method does not include the step of applying said aqueous composition onto a carrier, thereby eliminating the steps of drying a carrier and packaging a carrier before transporting the aqueous composition to the local site.

5,702,719
SUBSTANTIALLY PURIFIED BETA (1,3) FINELY GROUND YEAST CELL WALL GLUCAN COMPOSITION WITH DERMATOLOGICAL AND NUTRITIONAL USES
Byron A. Donzis, #18 W. Rivercrest, Houston, Tex. 77042
Division of Ser. No. 396,490, Mar. 2, 1995, Pat. No. 5,576,015. This application May 30, 1996, Ser. No. 657,626
Int. Cl.^{6} A23K *1/165;1/17;* **A61K** *9/70;9/20*
U.S. Cl. 424—442 **2 Claims**

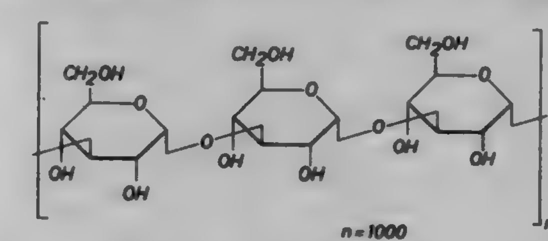

1. A composition suitable for nutritional supplementation comprising a water-insoluble yeast cell wall extract comprising substantially purified beta (1,3) glucans having a particle size of about 1.0 microns or less.

5,702,720
TRANSDERMAL DEVICE FOR THE DELIVERY OF FLURBIPROFEN
Jochem Effing, Borken; Eberhard Gruhlke, Ochtrup, both of Germany; Kristin Godbey, Vadnais Heights, Minn., and Wolfgang Welsing, Borken, Germany, assignors to Minnesota Mining and Manufacturing Company, St. Paul, Minn.
Filed Dec. 22, 1995, Ser. No. 577,482
Int. Cl.^{6} A61F *13/02*
U.S. Cl. 424—448 **18 Claims**

1. A transdermal delivery device comprising:
(A) a backing;
(B) an adhesive layer adhered to one surface of the backing and consisting essentially of a mixture of
(1) a copolymer comprising interpolymerized units derived from
(a) one or more A monomers selected from the group consisting of alkyl acrylates containing 4 to 10 carbon atoms in the alkyl group and alkyl methacrylates coming 4 to 10 carbon atoms in the alkyl group; and
(b) one or more ethylenically unsaturated B monomers comprising a functional group selected from the group consisting of carboxylic acid, sulfonamide, urea, carbamate, carboxamide, hydroxy, amino, oxy, oxo and cyano;
(2) flurbiprofen in a therapeutically effective amount;
(3) isopropyl myristate in an amount of about 20 to about 40 percent by weight based on the total weight of the adhesive layer, and
(4) a polyvinylpyrrolidone in an amount of about 1 to about 10 percent by weight based on the total weight of the adhesive layer, wherein the device has a moisture vapor transmission rate greater than 400 $g/m^2/24$ hr.

5,702,721
TRANSDERMAL THERAPEUTIC SYSTEM EXHIBITING AN INCREASED ACTIVE SUBSTANCE FLOW AND PROCESS FOR THE PRODUCTION THEREOF
Michael Horstmann, and Fritz Herrmann, both of Neuwied, Germany, assignors to LTS Lohmann Therapie-Systeme GmbH & Co. KG, Neuwied, Germany
Continuation of Ser. No. 43,918, Apr. 7, 1993, abandoned, which is a division of Ser. No. 500,646, Mar. 28, 1990, Pat. No. 5,230,898. This application Aug. 30, 1994, Ser. No. 298,236
Claims priority, application Germany, Apr. 1, 1989, 39 10 543.1
Int. Cl.^{6} A61K *9/70;9/14;47/32;* **A61L** *15/16*
U.S. Cl. 424—449 **21 Claims**

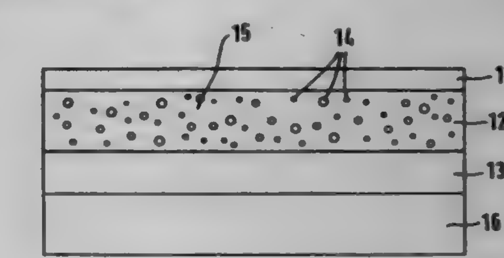

1. A process for the production of a transdermal therapeutic system exhibiting a layered structure, consisting of a backing layer (11) which is substantially impermeable to active substances, a matrix (12) comprising the active substance, and a layer (13) controlling the access of cutaneous liquid, in which the matrix (12) consists of a material (15) which is permeable to water vapour, but substantially water-insoluble and free of active substances, in which islands (14) are distributed which consist of a solid solution of pharmaceutical in a water-soluble or water-swellable base material, the proportion of islands being between 0.5 and 70%, the matrix being activatable by cutaneous liquid, the step which comprises spray drying a solution of the active substance and the water soluble or water-swellable base material in a suitable volatile solvent.

5,702,722
LIPOSOMES WITH ENHANCED ENTRAPMENT CAPACITY, METHOD AND USE
Hervé Tournier, Valleiry, France; Michel Schneider, Troinex, Switzerland, and Christian Guillot, Le Chable-Beaumont, France, assignors to Bracco Research S.A., Carouge, Sweden
Filed Sep. 12, 1995, Ser. No. 527,087
Claims priority, application European Pat. Off., Sep. 30, 1994, 94810570
Int. Cl.^{6} A61K *9/127*
U.S. Cl. 424—450 **19 Claims**

1. A method of making a suspension of liposome vesicles with enhanced entrapment capacity, said method comprising the steps of:

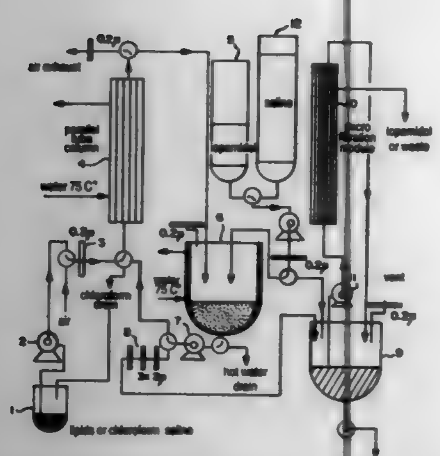

(a) dissolving one or more film forming lipids in at least one organic solvent to form a solution in a reaction vessel,
(b) evaporating the solvent to form a thick, viscous solution,
(c) subjecting the reaction vessel to reduced pressure and expanding the thickened solution into a foam,

thereby producing a dry expanded three dimensional lipid structure with a bulk density below 0.1 g/cm^3,

(d) contacting the three dimensional lipid structure with an aqueous solution carrier phase thereby producing a suspension of liposome vesicles entrapping the carrier solution.

5,702,723
MULTI-STAGE DELIVERY SYSTEM FOR INGESTIBLE MEDICATIONS OR NUTRIENTS
David Griffin, 1 Paddington Cir., Bronxville, N.Y. 10708
Filed Aug. 2, 1994, Ser. No. 284,815
Int. Cl.^{6} A61K *9/22;9/28;9/52*
U.S. Cl. 424—463 **5 Claims**

1. An orally ingestible multi-stage pill or capsule to treat a condition, said pill or capsule having multiple active ingredients and comprising:

a) an internal layer comprising an essentially solid first active ingredient, being an internally or systemically active ingredient intended for absorption gastro-intestinally;
b) an antacid coating said first active ingredient to relieve discomfort caused by the ingestion of said multi-stage pill or capsule; and
c) an external layer comprising a second active ingredient being a solid or semi-solid saliva-soluble material, said second active ingredient being substantially formed around the antacid coating and being a second and locally acting agent providing a condition-related therapeutic effect in the mouth, esophagus or bronchial tract;

said first and second active ingredients providing cooperative relief for one or more symptoms associated with said condition.

5,702,724
PROCESS FOR THE PREPARATION OF AN ORAL SOLID DOSAGE FORM CONTAINING DICLOFENAC
Peter Heinrich Stahl, Freiburg, Germany, and Claudio Gamboni, Allschwil, Switzerland, assignors to Ciba-Geigy Corporation, Summit, N.J.
PCT No. PCT/EP94/01662, § 371 Date Dec. 6, 1995, § 102(e) Date Dec. 6, 1995, PCT Pub. No. WO94/28936, PCT Pub. Date Dec. 22, 1994
PCT Filed May 24, 1994, Ser. No. 556,979
Claims priority, application Switzerland, Jun. 8, 1993, 1711/93
Int. Cl.^{6} A61K *9/28;9/36*
U.S. Cl. 424—465 **5 Claims**

1. A process for the preparation of compressed tablets containing diclofenac or a pharmaceutically acceptable salt thereof, which comprises preparing an inclusion compound consisting of γ-cyclodextrin and a therapeutic agent selected from the group consisting of diclofenac and a pharmaceutically acceptable salt thereof, and compressing said inclusion compound directly into compressed tablets, with the addition of pharmaceutically-acceptable excipients.

5,702,725
HYDROMORPHONE THERAPY
Sonya Merrill, San Jose; Atul Devdatt Ayer, Palo Alto; Navjot Chadha, Sunnyvale, and Anthony L. Kuczynski, Mt. View, all of Calif., assignors to Alza Corporation, Palo Alto, Calif.
Continuation of Ser. No. 271,593, Jul. 7, 1994, Pat. No. 5,529,787. This application Mar. 5, 1996, Ser. No. 611,294
Int. Cl.^{6} A61K *9/20;* **A01N** *43/08*
U.S. Cl. 424—472 **14 Claims**

1. A therapeutic composition indicated for the relief of pain comprising 1 to 1000 mg of hydromorphone, 25 to 500 mg of a poly(alkylene oxide) possessing a 150,000 to 500,000 molecular weight, 1 to 50 mg of a poly(vinylpyrrolidone) having a 10,000 to 300,000 molecular weight, and 0 to 7.5 mg of a lubricant.

5,702,726

Patent Not Issued For This Number

5,702,727
COMPOSITIONS AND METHODS FOR THE ORAL DELIVERY OF ACTIVE AGENTS
Alfred A. Amkraut, and Heechung Yang, both of Palo Alto, Calif., assignors to Alza Corporation, Palo Alto, Calif.
Continuation of Ser. No. 20,481, Feb. 22, 1993, abandoned. This application Mar. 6, 1995, Ser. No. 409,613
Int. Cl.^{6} A61K *9/14;9/51;9/64;38/00*
U.S. Cl. 424—491 **5 Claims**

1. A method for systemically delivering a protein or polypeptide drug to a mammalian host, said method comprising (a) orally administering to the host a composition which comprises the protein or polypeptide drug protectively retained by a carrier particle wherein said carrier particle is attached to a binding moiety which binds specifically to a target molecule present on the surface of a mammalian enterocyte, the target molecule being an endocytosis- or phagocytosis- promoting receptor, and (b) delivering the protein or polypeptide drug through the intestinal mucosa of the host to the blood stream of the host, wherein the carrier particle is absorbed by the mammalian enterocyte prior to release of the protein or polypeptide drug from the particle.

5,702,728
CLAM EXTRACT PREPARATION, THE METHOD OF PREPARATION AND USE THEREOF
Jieliang Bi, Room 301, Bldg. 31, Zhong Guancun Haidian District, Beijing 100080, China
PCT No. PCT/CN94/00026, § 371 Date Oct. 13, 1995, § 102(e) Date Oct. 13, 1995, PCT Pub. No. WO94/23731, PCT Pub. Date Oct. 27, 1994
PCT Filed Apr. 15, 1994, Ser. No. 532,663
Claims priority, application China, Apr. 17, 1993, 93 1 03750.6
Int. Cl.^{6} A61K *35/56*
U.S. Cl. 424—547 **20 Claims**

1. A composition comprising a clam extract prepared from a clam from the group consisting of Anodonta woodiana Lea, Cristaria plicata, Hyriopsis cumingii or a mixture thereof, which is light yellow, yellow or light brown color, and has characteristic absorption in the range of 250 nm to 278 nm of ultraviolet-visible light absorption spectrum.

5,702,729
METHODS FOR THE PREVENTION AND TREATMENT OF GASTROINTESTINAL DISORDERS CAUSED OR MEDIATED BY ALGAE OR CYANOBACTERIA
Jamesina Anne Fitzgerald, Hamilton, Ohio, assignor to The Procter & Gamble Company, Cincinnati, Ohio
Filed Dec. 7, 1995, Ser. No. 569,028
Int. Cl.^{6} A61K *33/24;31/28*
U.S. Cl. 424—653 **8 Claims**

1. A method for treatment of a human or lower animal subject having a gastrointestinal disorder caused or mediated by one or more organisms selected from the group consisting of algae, cyanobacteria, and combinations thereof, comprising administering to the subject from about 50 milligrams to about 5000 milligrams of bismuth, per day, for from about 1 to 56 days.

5,702,730
APPARATUS FOR MAKING A CONTINUOUS THERMOPLASTIC FLEECE
Hans Reifenhäuser, and Michael Baumeister, both of Troisdorf, Germany, assignors to Reifenhauser GmbH & Co. Maschinenfabrik, Troisdorf, Germany
Filed May 22, 1996, Ser. No. 651,278
Claims priority, application Germany, May 26, 1995, 195 18 895.0
Int. Cl.^{6} B29C *47/34*
U.S. Cl. 425—72.2 **10 Claims**

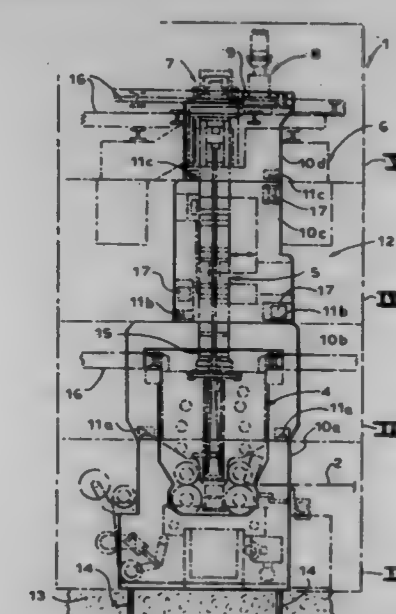

1. In an apparatus for making a plastic filament web and having arranged in a vertical stack starting from the top

an extruder releasably mounted on a platform, connected to a spinneret, and supplying molten plastic thereto for formation of downwardly moving plastic streams,
a blowing unit directly beneath the spinneret cooling the streams and forming them into downwardly moving plastic filaments,
a stretching gap directly beneath the blowing unit stretching the plastic filaments,
a diffuser shaft directly beneath the stretching gap looping the stretched plastic filaments, and
a foraminous conveyor directly beneath the diffuser shape receiving the looped and stretched filaments as a fleece and transporting the fleece horizontally out of the apparatus, the improvement comprising:

a lowermost housing containing the conveyor, adapted to sit directly on a stationary support surface, and having an upper surface;
an uppermost housing spaced above the lowermost housing, supporting the extruder platform, containing at least the spinneret, and having a lower surface;
a plurality of intermediate housings stacked one atop the other between the lowermost and uppermost housings, containing the blowing unit, the stretching gap, and the diffuser shaft and each having a lower surface and an upper surface, each lower surface directly engaging and fitting complementarily to the upper surface of the underlying housing, the intermediate and uppermost housings being substantially wholly supported on the underlying housings and forming therewith a self-supporting tower supporting the platform; and
support members in the lowermost housing extending from the upper surface of the lowermost housing into the stationary support surface and supporting the intermediate and uppermost housings on the stationary support surface.

5,702,731
LATERAL TYPE MOLDING APPARATUS FOR THE PRODUCTION OF COMPOSITE INSULATORS
Koji Hayakawa, Handa; Isao Nakajima, and Yusuke Utsumi, both of Nagoya, all of Japan, assignors to NGK Insulators, Ltd., Japan
Filed Jun. 6, 1995, Ser. No. 472,710
Claims priority, application Japan, Dec. 28, 1994, 6-327682
Int. Cl.^{6} B29C *45/14;45/18;45/34*
U.S. Cl. 425—125 **6 Claims**

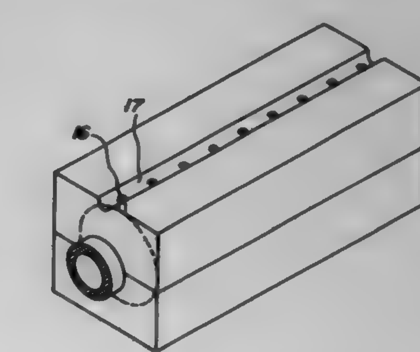

1. A composite insulator-producing lateral molding apparatus, comprising:

a mold body having a first molding unit and a second molding unit, each of said first and second molding units being provided, at an inner peripheral face, with recesses for the formation of a housing having a plurality of shed portions and axial portions connecting the shed portions;
means for opening and tightening the first molding unit and the second molding unit;
a filling passage for introducing a housing-forming material into said recesses; and
a plurality of housing-forming material escape passages, wherein a core member of said insulator is placed between the first and second molding units, the first and second molding units are tightened, and the housing-forming material is introduced into said recesses to form the housing, wherein the first molding unit and the second molding unit extend laterally, and said core member is laterally arranged between the first and second molding units, and
wherein a single recess is provided longitudinally at an upper face of the mold body, and upper ends of the housing-forming material escape passages are open to said single recess.

5,702,732

DEVICE FOR THE PRODUCTION OF PRETZELS

Oswald Piller, Ballaufstr. 5, Karlsfeld, D-85757, Germany

Filed Jul. 24, 1996, Ser. No. 685,873

Claims priority, application Germany, Jul. 25, 1995, 195 27 116.5; Nov. 20, 1995, 195 43 250.9

Int. Cl.⁶ A21C *3/08*

U.S. Cl. 425—145 **5 Claims**

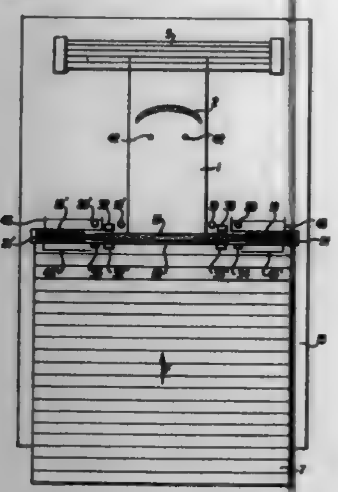

1. Device for the production of pretzels from pre-formed pieces of dough, comprising a feeding means for feeding the pieces of dough to a working platform, which is provided with a plurality curved stopping devices, a stand that can be transported both with and against a transport direction of the pieces of dough, a holding device set up so it can rotate and be lowered on an underside of the stand around a central axis, two grippers for the pieces of dough set up on the underside of the holding device, a structure for measuring the position of the piece of dough, with a control means for controlling the grippers as a function of the position of the piece of dough, the working platform having a smaller width than the width of the feeding means for the piece of dough and being arranged symmetrically to the longitudinal axis of the feeding means, two coated surfaces that extend to both sides of the working platform, with two vertical, stationary pins extending out the working platform near both outer edges and next to both coated surfaces when viewed in the transport direction, sensors connected to the control means, and two retaining clips for the pieces of dough located in the direct proximity of each of said sensors and outside of the working platform, which are connected to and operated by the control means by a respective retaining clip and a respective sensor, forming a unit capable of being transported back and forth lengthwise on each of said coated surfaces, each unit being controlled independently of the unit by the control means in such a way that each sensor transmits a signal to the control means after reaching an appropriate end of the piece of dough, which causes the control means to close the retaining clip so that it gasps the end of the piece of dough at a specified location near the end of the piece of dough, after which it returns together with its respective sensor to its initial position near the working platform.

5,702,733

PRESS WORKING MACHINE

Toshiaki Enami, Kyoto, Japan, assignor to Enami Seiki Mfg. Co., Ltd., Yao, Japan

Filed Apr. 9, 1996, Ser. No. 631,669

Claims priority, application Japan, May 24, 1995, 7-125161

Int. Cl.⁶ B29C *43/04*

U.S. Cl. 425—183 **20 Claims**

1. A press working machine comprising:

a mold having a working surface for press-working a workpiece and a bottom surface on an opposite side of said mold relative to said working surface, wherein said mold is an integral structure having at least one slit provided selectively therein

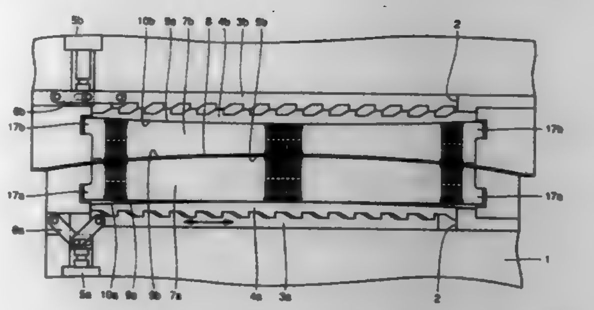

so that said mold is deformable and a shape of said working surface is variable together with that of said bottom surface;

a press member adapted to be pressed against said bottom surface of said mold thereby deforming said mold and changing the shape of said bottom surface as well as that of said working surface;

a base having a concave portion adapted to selectively receive therein said press member and supporting said mold; and

a driving mechanism coupled to said press member for selectively driving said press member to be received in or to project from said concave portion to change the shape of said bottom surface as well as that of said working surface of said mold.

5,702,734

TAKE-OUT AND COOLING APPARATUS

Daniel A. Hartman, Cincinnati; Timothy L. Bright, Greenville, and Terry A. Shroder, Arcanum, all of Ohio, assignors to Electra Form, Inc., Vandalia, Ohio

Filed Dec. 19, 1994, Ser. No. 359,037

Int. Cl.⁶ B29C *49/66;49/70;49/28*

U.S. Cl. 425—534 **24 Claims**

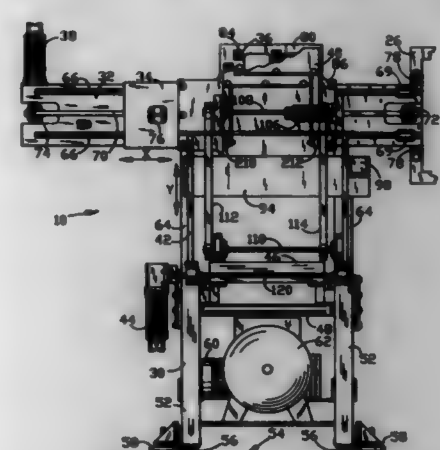

1. An article handling apparatus for removing articles from a molding machine, the molding machine including at least two molding elements movable between a closed conformation wherein the articles are molded and an open conformation where the articles are released in a space between the molding elements, the article handling apparatus comprising:

a base including an arm coupled to a molding machine,

an carriage mounted on the arm for movement in a first dimension into and out of the space between the molding elements when in said spaced conformation,

a molded article engagement apparatus coupled to the carriage for engaging the molded articles as they are released from the molding machine,

a first motor coupled to the arm for moving the carriage and engagement apparatus between said space between the molding elements and any of a preselected plurality of positions located outside the molding machine, and

a plurality of sets of article grabbers, each set of the article grabbers mounted with respect to the base for movement to any of a corresponding separate preselected plurality of remote positions, for grabbing the articles from the article engagement apparatus, a set of the article grabbers being positioned to confront the articles held by the engagement apparatus at each of said preselected plurality of positions and to grab and move the confronted articles to any of the corresponding separate preselected plurality of remote positions, so that operation of the first motor moving the carriage and the engagement apparatus to one of the preselected plurality of positions located outside the molding machine achieves a selection of at least one of the corresponding separate preselected plurality of remote positions for deposit of the articles.

5,702,735

MOLDING ARRANGEMENT TO ACHIEVE SHORT MOLD CYCLE TIME

Wallace Anthony Martin, Orange Park, Fla.; Wybren van der Meulen, Neunen, Netherlands; Edgar V. Menezes; Kornelis Renkema, both of Jacksonville, Fla.; Robert B. Phillips, Orange Park, Fla.; Victor Lust; Jongliang Wu, both of Jacksonville, Fla., and Gerbrand Eshuis, Hgogeveen, Netherlands, assignors to Johnson & Johnson Vision Products, Inc., Jacksonville, Fla.

Continuation-in-part of Ser. No. 257,794, Jun. 10, 1994, Pat. No. 5,545,366. This application Sep. 29, 1995, Ser. No. 536,930

Int. Cl.⁶ B29C *33/38;45/73*

U.S. Cl. 425—548 **44 Claims**

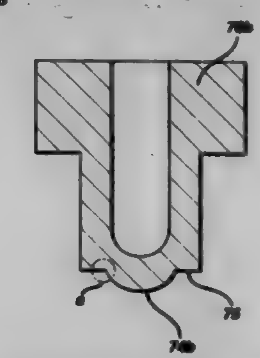

1. A molding apparatus for producing at least one mold half which is used for subsequently molding a soft contact lens therewith, comprising:

at least one first structure having a convex curved surface defining an optical quality curved surface;

at least one corresponding second structure having a concave curved surface disposed in proximal spaced relation to said convex surface, said first and second structures defining therebetween a volume wherein a mold half is formed;

a hot runner system connected to the volume between said first and second structures for delivering a quantity of molten material of which the mold half is to be formed;

said optical quality curved surface of said first structure being positioned further away from said hot runner system than said concave curved surface of said at least one second structure, such that the subsequently molded mold half comprises a concave optical quality lens forming surface;

said at least one first structure comprising a bushing having a hollow cylindrical shape and a power insert, said insert being positioned within said bushing and having an end surface protruding from one end of said bushing wherein said end surface comprises said optical quality curved surface, said insert further comprising a flat annular surface surrounding said optical quality curved surface; and

a cooling system for cooling at least one of said first and second structures,

wherein the positioning of the optical quality curved surface further away from the heated hot runner system, and the cooling system, provide for faster cooling of molten material which forms the mold half at the optical quality surface than the other surface of the mold half to allow quicker setting so that minimal residual stresses remain in the material which forms the optical quality curved surface of the mold half, and also provides faster molding and cycling time.

5,702,736

ASSEMBLY FOR MANUFACTURING A PISTON FROM PLASTIC MATERIAL

Nabil Henein, Darmstadt, Germany, assignor to ITT Automotive Europe GmbH, Germany

Filed Jun. 20, 1995, Ser. No. 492,645

Claims priority, application Germany, Jun. 20, 1994, 44 21 566.5

Int. Cl.⁶ B29C *45/40;45/44;45/26*

U.S. Cl. 425—556 **11 Claims**

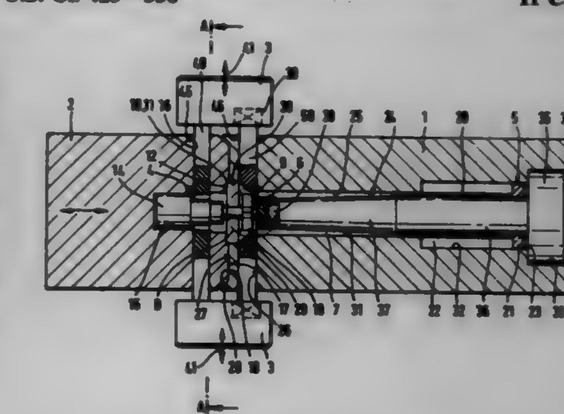

1. An assembly for manufacturing pistons, comprising:

a first mold having a first axial recess;

said first axial recess having a first core element and an ejector located therein, said first axial recess being open toward a first contact face on said first mold;

said first mold also having at least a first transverse recess oriented generally perpendicularly to said axial recess;

a first centering element located on said first mold generally perpendicularly with respect to said first transverse recess; and

a second mold movable toward and away from said first mold and having a second contact face and a second centering element; wherein

said first and second molds are connected together by at least one transverse slide located in said first transverse recess and connected to said second mold by a holding apparatus.

5,702,737

PREPARATION OF A READILY-DISPERSIBLE HOP EXTRACT FOR IMPARTING HOPPY AROMA AND FLAVOR TO BEER USING A LIPASE

James A. Guzinski, and Mark H. Schulze, both of Kalamazoo, Mich., assignors to Kalamazoo Holdings, Inc., Kalamazoo, Mich.

Continuation-in-part of Ser. No. 451,186, May 26, 1995, abandoned, which is a division of Ser. No. 305,134, Sep. 13, 1994. This application Apr. 17, 1996, Ser. No. 634,660

Int. Cl.⁶ A23D *7/04;* **A23L** *1/221;* **C12C** *3/00*

U.S. Cl. 426—33 **3 Claims**

1. A process for producing a water-dispersible hop extract composition consisting essentially of hop aroma and flavor components comprising at least 10% by weight of free fatty acid substances derived from hops, as determined by A.O.C.S. Method 5A-40, which is water-dispersible and which is characterized by increased dispersibility and availability of the hop aroma and flavor components when said composition is combined with water or with wort, which consists essentially of the step of exposing the hop aroma

and flavor components of a starting hop extract to the action of a lipase and optionally removing any aqueous phase, thereby producing said lipidic hop extract composition, consisting essentially of said hop aroma and flavor components comprising at least 10% by weight of free fatty acid substances derived from hops, which is dispersible in water and in wort.

5,702,738
SURFACE-RIPENED CHEESE PRODUCT
Michael John Phillips, Port Melbourne, Australia, assignor to Kraft Foods Limited, Port Melbourne, Australia
PCT No. PCT/AU91/00094, § 371 Date Nov. 7, 1992, § 102(e) Date Nov. 7, 1992, PCT Pub. No. WO91/14374, PCT Pub. Date Oct. 3, 1991
PCT Filed Mar. 19, 1991, Ser. No. 927,515
Int. Cl.⁶ A23C *9/12*
U.S. Cl. 426—36 **9 Claims**

1. A surface-ripened cheese product having a shelf life of at least 20 weeks at 2° C. to 5° C., prepared from a stable natural cheese base wherein a surface-ripening culture selected from the group consisting of *Penicillium candidum* and *Penicillium camemberti* is applied to the outside surface of said stable natural cheese base.

5,702,739
SIMPLIFIED METHOD OF CODING PACKAGES AND CODED PACKAGES PRODUCED BY SUCH METHOD
Joseph E. Owensby, Spartanburg, S.C., assignor to W. R. Grace & Co.-Conn., Duncan, S.C.
Filed Feb. 6, 1996, Ser. No. 597,591
Int. Cl.⁶ A22C *17/10*
U.S. Cl. 426—87 **17 Claims**

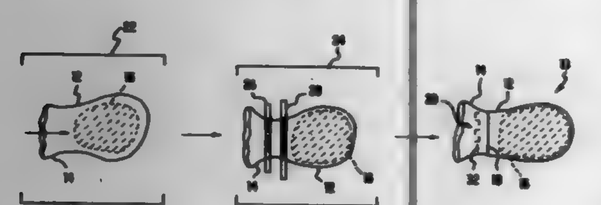

9. A coded package comprising:
a bag; and
a product positioned within said bag, said bag having a cut positioned therein, said at least one cut having a pre-selected characteristic which individually or together comprises a code for identification, said bag being sealed between said product and said at least one cut.

11. A coded package according to claim 9, wherein said product is a fresh red meat product.

5,702,740
EDIBLE GREETING CARD
Stephen Wild, 43 Twixt Hills Rd., St. James, N.Y. 11780
Filed Mar. 26, 1996, Ser. No. 622,700
Int. Cl.⁶ A23G *1/00;3/00*
U.S. Cl. 426—87 **20 Claims**

1. An edible greeting card comprising:
a) a first edible leaf being imprinted with an event-specific message;
b) a second edible leaf;
c) a hinge means for coupling said first edible leaf to said second edible leaf, said hinge means being coupled to an edge of said first edible leaf and to an edge of said second edible leaf so

that said first and second edible leaves are hingedly coupled to each other.

5,702,741
GRANULAR PARTICULATE FOOD COMPOSITION AND METHOD OF MAKING
Ernest Reutimann, New Milford, Conn., assignor to Nestec S.A., Vevey, Switzerland
Division of Ser. No. 316,575, Sep. 30, 1994, Pat. No. 5,540,944. This application Jun. 12, 1996, Ser. No. 662,356
Int. Cl.⁶ A23C *21/08;* **A23J** *3/08;* **A23L** *1/054;* **A23P** *1/08*
U.S. Cl. 426—92 **25 Claims**

1. A process for preparing a food composition comprising drying an aqueous mixture of egg albumen solids, milk protein solids, native starch solids and a polysaccharide gum under conditions of temperature which substantially avoid coagulation of the albumen, denaturation of the protein and gelatinization of the starch to obtain a mixture dried suitably for being formed into granules and forming the dried mixture into granules.

5,702,742
CONTAINER AND LOLLIPOP COMBINATION
Wayne H. Jones, Idaho Falls, Id., assignor to Spangler Candy Company, Bryan, Ohio
Continuation of Ser. No. 478,508, Jun. 7, 1995, abandoned, which is a continuation-in-part of Ser. No. 112,016, Aug. 25, 1993, abandoned. This application Jan. 3, 1997, Ser. No. 778,583
Int. Cl.⁶ B65D *81/00;6/00*
U.S. Cl. 426—115 **1 Claim**

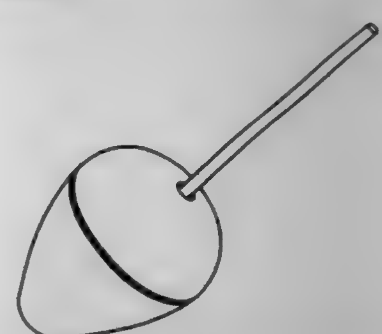

1. An egg-shaped container and lollipop combination comprising:
a. a confectionery formed in the shape of an egg;
b. a handle comprising:
a non-edible stick with a longitudinal axis,
a distal end for grasping by the user,
a proximal end buried in the confectionery to support the confectionery on said stick, and
a radial holed closure disk having a predetermined diameter and fixably located on the handle at an intermediate point between the proximal and distal ends of the stick adjacent

the confectionery and having the longitudinal axis of the stick passing through the center of the disk; and
c. a hollow egg-shaped container for receiving the egg-shaped confectionery and dimensioned internally to conform substantially with and completely enclose the external dimensions of said egg-shaped confectionery; said container comprising:
a downwardly extending first portion functioning as a closure cap and dimensioned and shaped to enclose the upper portion of said confectionery and,
an upwardly extending removable mating second portion functioning as a removable receptacle and dimensioned and shaped to enclose the remaining lower portion of said confectionery,
said first and second container portions being reclosably mating,
said second container portion further having an opening located in the bottom thereof for receiving the distal end of the stick, and
said opening in said second container portion being dimensioned larger than a cross section of the stick such that said distal end of said confectionery supporting stick can be inserted into said second container portion and can be passed through said opening such that the distal end of the stick remains outside the egg shaped container and the confectionery will be completely in said container when said first container portion is releasably mated to said second container portion over said confectionery; said opening in said second container portion being smaller than the predetermined diameter of the radial closure disk such that the disk covers completely the opening when it is seated against the opening to prevent any leakage therethrough.

5,702,743
RIGID RECLOSABLE BACON PACKAGE
Cindie M. Wells, Cambridge, Wis., assignor to Kraft Foods, Inc., Northfield, Ill.
Continuation of Ser. No. 220,849, Mar. 31, 1994, Pat. No. 5,520,939. This application May 24, 1996, Ser. No. 653,187
Int. Cl.⁶ B65D *85/62*
U.S. Cl. 426—129 **27 Claims**

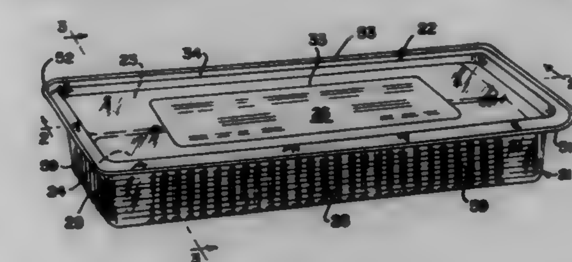

1. A shaped, generally rigid synthetic plastic sealed package for packaging sliced bacon, the package being reclosable and comprising:
a shaped, generally rigid tray member having a bottom panel, side panels defining a generally upstanding sidewall and an open mouth generally opposite to said bottom panel, said open mouth being defined between said generally upstanding sidewall and a tray member peripheral flange;
a shaped, generally rigid cover member secured onto said tray member, said cover member having a cover panel, a cover member peripheral flange, and a peripheral inset portion joining said cover panel and said cover member peripheral flange, said peripheral inset portion being substantially parallel to the generally upstanding sidewall of the tray member, and said cover panel being spaced from said cover member peripheral flange;
said bottom panel of the tray member, said sidewall of the tray member, and said cover panel of said cover member are sized and shaped to enclose therewithin at least two separate stacks of bacon strips arranged in longitudinal side-by-side relationship with each other, said bottom panel having a length substantially the same as the length of a bacon strip to be packaged therewithin and having a width substantially the same as the width of such a bacon strip multiplied by an integer of at least two, said bottom panel and generally upstanding side wall having transparency properties to permit inspection therethrough of sliced bacon within the tray member; and
means for releasably hermetically sealing together said tray member peripheral flange to said cover member peripheral flange.

5,702,744
METHOD OF PRODUCING ALTAR BREAD
Bruce Palmers, 229 Locke Street, North, Hamilton, Ontario, Canada, L5P 4B8, and Linda Thompson, P.O. Box 1046 Station "A" , Hamilton, Ontario, Canada, L8N 3R4
Filed Feb. 13, 1996, Ser. No. 601,953
Claims priority, application Canada, Feb. 2, 1996, 2168691
Int. Cl.⁶ A21D *13/00*
U.S. Cl. 426—242 **7 Claims**

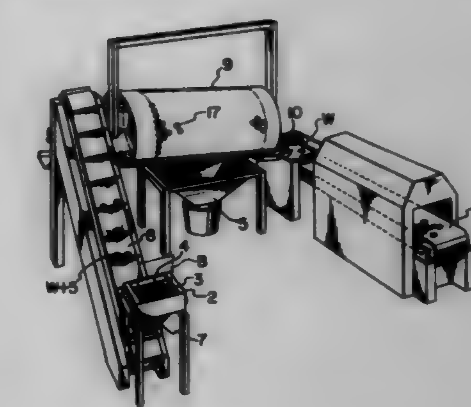

1. A method of manufacturing a wafer comprising the steps of:
i) baking a mixture of flour and water to form sheets of bread;
ii) hydrating said sheets of bread;
iii) passing said hydrated sheets of bread through a pair of roll cutters having complementary cutting surfaces, to cut a plurality of wafers, and a quantity of scrap;
iv) sorting said cut, hydrated wafers from said scrap by passing said wafers and scrap through a sorting drum to separate said wafers from said scrap;
v) arranging said wafers in a single horizontal layer on a surface that is substantially transparent to radiant heat; and
vi) exposing said single layer of wafers to radiant heat, from above and below, to dry said wafers evenly and substantially without warping or bulging.

5,702,745
PROCESS FOR MAKING SHELF-STABLE, READY-TO-EAT RICE
Angel A. Yang; Loren L. Druz, both of Yorba Linda, and Terry Berman, Orange, all of Calif., assignors to Hunt-Wesson, Inc., Fullerton, Calif.
Filed Jun. 24, 1996, Ser. No. 669,625
Int. Cl.⁶ A23B *9/00;* **H05B** *6/00*
U.S. Cl. 426—242 **26 Claims**

1. A method for making a shelf-stable, ready-to-eat rice product comprising the steps of:
coating pregelatinized rice grains with an emulsifier;
adding a sufficient amount of a combination of a food acid and glucono delta-lactone to the thus coated rice, grains to lower the pH to 4.6 or less; and

thermally treating the resulting low-pH rice grains at a temperature and for a time sufficient to sterilize the rice.

5,702,746

PROCESS OF CONVERTING FOOD WASTE TO RE-HYDRATABLE EDIBLE FOOD

Rolf Wilk, 1574 Aluna Way, Escondido, Calif. 92027

Filed May 28, 1996, Ser. No. 655,154

Int. Cl.⁶ A23L *3/00*

U.S. Cl. 426—248 16 Claims

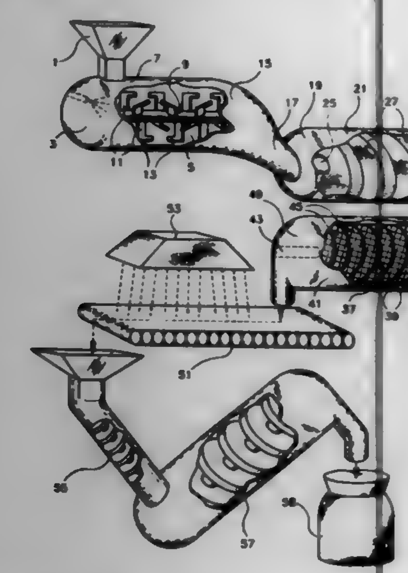

1. A process of converting food waste to a dry, rehydratable, edible food material, comprising the steps of:
- a) collecting large quantities of edible food and food scraps at one location;
- b) feeding said food and food scraps to means for chopping to comminute the food and food scraps to a mixture of food pieces:
- c) feeding said mixture of food pieces to means for grinding said mixture to a flowable mixture of homogeneous food particles;
- d) feeding said flowable mixture of homogeneous food particles to a filter to extract a portion of liquid therefrom to produce a more flowable mixture of homogeneous food particles;
- e) subjecting said food particles to intimate contact with ultraviolet radiation to kill unwanted bacteria and viruses in the mixture; and,
- f) feeding said irradiated mixture of homogeneous food particles to drying means for drying said mixture of food particles to a dry mixture of homogeneous food particles that are packageable and later rehydratable with addition of liquid.

5,702,747

PROCESS FOR DECAFFEINATING AQUEOUS CAFFEINE-CONTAINING EXTRACTS

Stefan Sipos, Bremen, Germany, and Gary V. Jones, Stettlen, Switzerland, assignors to Kraft Foods, Inc., Northfield, Ill.

Continuation of Ser. No. 376,313, Jan. 20, 1995, abandoned. This application Aug. 28, 1996, Ser. No. 704,033

Int. Cl.⁶ A23F *3/20;5/16*

U.S. Cl. 426—422 12 Claims

1. Process for decaffeinating caffeine-containing aqueous extracts selected from the group consisting of aqueous green coffee extracts, aqueous roasted coffee extracts and aqueous tea extracts which comprises contacting said extract with activated carbon fibers which have not been preloaded and selectively adsorbing only caffeine and chlorogenic acid onto the activated carbon fibers.

5,702,748

METHOD OF WET PEELING FOR BREWER'S SPENT GRAIN

Sohtaroh Kishi; Yoshio Shiba, both of c/o Kirin Beer Kabushiki Kaisha, 26-1, Jingumae 6-Chome, Shibuyu-Ku, Tokyo-To, Japan; Hidekazu Miyake, c/o Kabushiki Kaisha Miyake Seisakusho, 5-6-9, Mitejima, Nishi-Yodogawa-Ku, Osaka-Shi, Osaka-fu, Japan, and Wilhelm Kuenzel, c/o Wilhelm Kuenzel Muehlenbau und Maschinenfabrik, Industriestrasse 7, Mainleus, Bayern, Germany

Filed Jul. 25, 1995, Ser. No. 506,803

Claims priority, application Japan, Jul. 26, 1994, 6-174563

Int. Cl.⁶ A23J *3/14;* A23K *1/06;* A23P *1/00*

U.S. Cl. 426—478 7 Claims

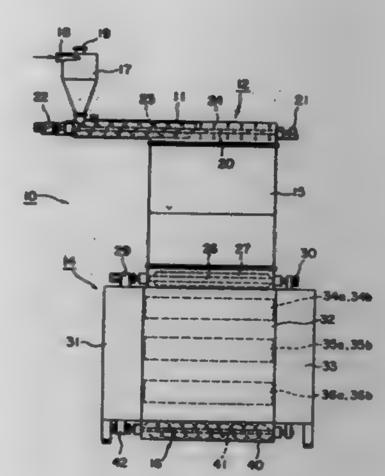

1. In a method of wet-peeling brewer's spent grain comprising supplying wet brewer's spent grain to a roll mill having at least one pair of rolls which separate the brewer's spent grain into component parts, including a protein-rich product and a husk, and recovering the separated protein-rich product, the improvement wherein each roll of the at least one pair of rolls has a cutting edge, with the cutting edges of respective rolls having a spacing therebetween, wherein the roll mill rotates the at least one pair of rolls at different rotational speeds and at a rotational speed ratio, and wherein the moisture content of the wet brewer's spent grain, the spacing between the rolls and the rotational speed ratio of the rolls are set so as to crush and peel a sufficient amount of an aleurone layer of the grain from the husk such that the protein-rich product contains at least 50% protein and comprises at least 30.3% by weight of the brewer's spent grain.

5,702,749

PROCESS FOR PREPARING POWDERED SEASONINGS

Masahisa Sugiura; Kazuhiro Okada, both of Tsu, and Sadao Nagata, Saitama-ken, all of Japan, assignors to Nisshin Flour Milling Co., LTD., Tokyo, Japan

Filed Feb. 28, 1996, Ser. No. 608,197

Claims priority, application Japan, Mar. 16, 1995, 7-056893

Int. Cl.⁶ A23J *3/00;* A23L *3/3463;1/0562;1/238*

U.S. Cl. 426—638 1 Claim

1. A process for preparing a powdered seasoning, comprising:

(a) dissolving in a seasoning liquor or soy sauce containing solids:

100 to 250% by weight, in total, of a dextrin having a DE value of 1 to 5 and a dextrin having a DE value of 6–15, wherein the dextrin having a DE value of 1 to 5 comprises 5 to 60% by weight of the total amount of the dextrin; and

3 to 20% by weight of gelatin,

wherein the weight percent of the total dextrin and the gelatin is based on the solids content of the seasoning liquor or soy sauce; and

(b) spray-drying the resulting solution.

5,702,750

METHOD FOR PROCESSING FRESH PLANTS TO BE STORED BETWEEN LOW POSITIVE AND NEGATIVE TEMPERATURES

Luc Darbonne, Milly la Foret, France, assignor to Societe de Developpment de L'Industrie Agro-Alimentaire et de la Pepiniere Europeenne - Sodiape, Bagneau Sur Loing, France

Filed Sep. 29, 1995, Ser. No. 536,802

Claims priority, application France, Sep. 29, 1994, 94 11654

Int. Cl.⁶ A23B *7/024;7/08*

U.S. Cl. 426—615 32 Claims

1. A method for processing freshly picked plants comprising the following steps:

(a) adding water activity depressors to consumable pieces of plants and mixing them to form a mixture, the resulting mixture having 8 to 55% of water activity depressors and a water activity at 20° C. ranging from 0.6 to 0.8;

(b) deep-freezing the mixture;

(c) extracting from the frozen mixture a predetermined total amount of water by a sublimation process having a primary desiccation and a secondary desiccation, by stopping the sublimation process during the primary desiccation or at the very beginning of the secondary desiccation until total water content of the mixture is between 30% to 55%, such mixture then having dry, still frozen and/or moist pieces of plants;

(d) homogeneously mixing the mixture from which the predetermined total amount of water was extracted so as to allow for a migration of water from the frozen pieces of plants towards the moist pieces of plants and the dry pieces of plants;

(e) collecting the pieces of plants from the homogeneously mixed mixture, wherein no rehydration step before use of the pieces of plants is required.

5,702,751

PROCESS AND INSTALLATION FOR ROASTING FRUITS OR NUTS

Jacky Cormouls-Houles, Toulouse, France, assignor to Societe Civile Chenier, Toulouse, France

PCT No. PCT/FR94/01473, § 371 Date Jun. 17, 1996, § 102(e) Date Jun. 17, 1996, PCT Pub. No. WO95/16365, PCT Pub. Date Jun. 22, 1995

PCT Filed Dec. 15, 1994, Ser. No. 663,228

Claims priority, application France, Dec. 15, 1993, 93 15320

Int. Cl.⁶ A23L *1/38;* A47J *37/08*

U.S. Cl. 426—629 9 Claims

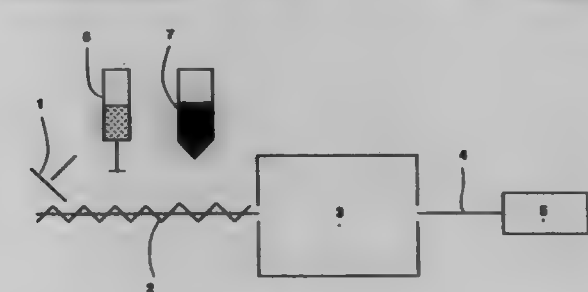

1. A process for roasting fruits or seeds having low water content, said process comprising the steps of:

coating fruits or seeds to be roasted with edible oil;

adding at least salt as a seasoning substance to said oil-coated fruits or seeds; and then

roasting said salted, oil-coated fruits or seeds.

5,702,752

PRODUCTION OF ISOFLAVONE ENRICHED FRACTIONS FROM SOY PROTEIN EXTRACTS

Eric T. Gugger, and Daniel G. Dueppen, both of Decatur, Ill., assignors to Archer Daniels Midland Company, Decatur, Ill.

Filed Mar. 13, 1996, Ser. No. 614,545

Int. Cl.⁶ A23L *1/20*

U.S. Cl. 426—634 21 Claims

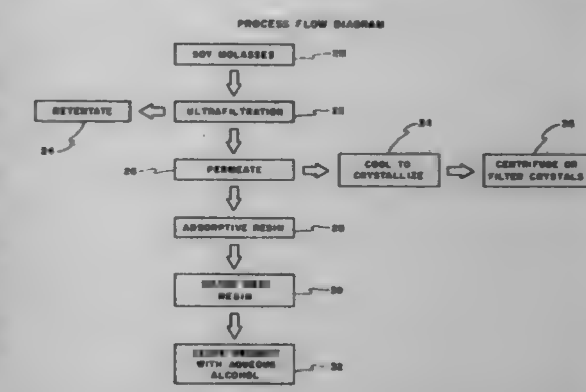

1. A process for separating isoflavones fractions from an aqueous vegetable starting material, said process comprising the steps of:

(a) heating an aqueous vegetable starting material to a constant temperature selected on a basis of an aqueous solubility for a given isoflavone fractions that is to be recovered;

(b) passing the heated starting material of step (a) through an ultrafiltration membrane to obtain a permeate, the membrane having a cut-off which passes the given isoflavone fractions;

(c) adjusting back pressure in a retentate acting on the membrane of step (b) to adjust a flow of said permeate while continuing said ultrafiltration; and

(d) collecting said isoflavones fractions from the permeate.

5,702,753

METHOD OF MANUFACTURING A DIAGNOSTIC ELECTRODE

Rafael M. Yasis, White Bear Lake; Rosa Uy, St. Paul; Barbara J. Marcus, Cottage Grove, and Steven S. Kantner, St. Paul, all of Minn., assignors to Minnesota Mining And Manufacturing Company, St. Paul, Minn.

Filed Nov. 22, 1994, Ser. No. 343,253

Int. Cl.⁶ B05D *3/00;* A61B *5/0408*

U.S. Cl. 427—2.12 9 Claims

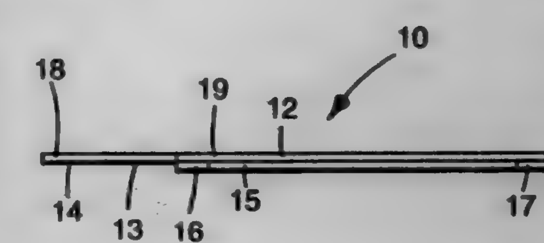

1. A method of making an electrode, comprising:

(a) providing a non-conductive flexible backing having a side having an electrically conductive surface;

(b) coating at least one field of biocompatible pressure sensitive adhesive on the side wherein each field of biocompatible pressure sensitive adhesive contacts the electrically conductive surface; and

(c) coating a field of conductive adhesive on the electrically conductive surface.

5,702,754

METHOD OF PROVIDING A SUBSTRATE WITH A HYDROPHILIC COATING AND SUBSTRATES, PARTICULARLY MEDICAL DEVICES, PROVIDED WITH SUCH COATINGS

Sheng-Ping Zhong, Farum, Denmark, assignor to Meadox Medicals, Inc., Oakland, N.J.

Filed Feb. 22, 1995, Ser. No. 392,141

Int. Cl.^{6} B05D *1/36;3/02;5/08;7/02*

U.S. Cl. 427—2.12 **27 Claims**

1. A method of providing a substrate, with a hydrophilic coating which becomes lubricous when contacted with an aqueous fluid, said method comprising:

a) coating said substrate with a first aqueous coating composition comprising an aqueous dispersion or emulsion of a polymer having organic acid functional groups and an excess of a polyfunctional cross-linking agent having functional groups being capable of reacting with organic acid groups, and drying said first coating composition to obtain a substantially water-insoluble coating layer still including functional groups being reactive with organic acid groups, and

b) forming a continuous lubricious surface over said first coating composition by contacting said dried first coating composition with a second aqueous coating composition comprising an aqueous solution or dispersion of a hydrophilic polymer having organic acid functional groups, and drying the combined coatings, to bond the hydrophilic polymer to the polymer of the first coating composition through said excess cross-linking agent.

5,702,755

PROCESS FOR PREPARING A MEMBRANE/ELECTRODE ASSEMBLY

Robert D. Mussell, Midland, Mich., assignor to The Dow Chemical Company, Midland, Mich.

Filed Nov. 6, 1995, Ser. No. 554,066

Int. Cl.^{6} H01M *8/10*

U.S. Cl. 427—115 **14 Claims**

1. A process for preparing a membrane/electrode assembly, which comprises the sequential steps of (i) applying a layer of a composition comprising (a) catalytically-active particles, (b) an organic compound having a pKa of at least from about 18 and a basicity parameter, β, of less than 0.66, and (c) a polymeric binder to a solid polymer electrolyte, a carbon fiber paper, or a release substrate; (ii) heating the composition under conditions sufficient to volatilize at least 95 percent of component (b); and (iii) positioning the composition in contact with a solid polymer electrolyte, if the composition was not applied directly to the solid polymer electrolyte, forming the membrane/electrode assembly thereby.

5,702,756

PROCESS FOR MAKING A THIN FILM MAGNETIC HEAD

Dennis Richard McKean, Cupertino, and Alfred Floyd Renaldo, San Jose, both of Calif., assignors to International Business Machines Corporation, Armonk, N.Y.

Continuation of Ser. No. 299,780, Sep. 1, 1994, Pat. No. 5,580,602. This application Jul. 10, 1996, Ser. No. 676,693

Int. Cl.^{6} B05D *5/12*

U.S. Cl. 427—127 **11 Claims**

1. A method for making a thin film magnetic head comprising the steps of:

(a) forming a first pole piece layer of magnetic material;

(b) depositing a gap-forming layer of nonmagnetic material over said first pole piece layer;

(c) depositing a first layer of insulation material on the gap-forming layer;

(d) forming a conductive coil on said first layer of insulating material;

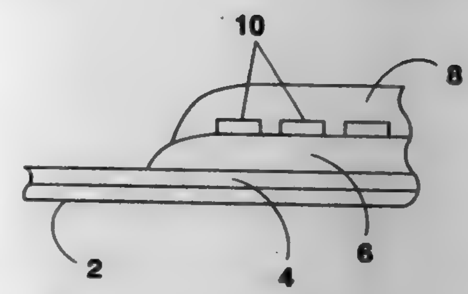

(e) depositing a second layer of insulation material over said conductive coil, the first and second layers of insulation material comprising a phenolic resin polymer, 4-sulfonate diazonaphthoquinone, and less than 20 weight % of a thermally activated melamine formaldehyde resin crosslinking agent;

(f) heating the first and second layers of insulating material to crosslink the polymer; and

(g) depositing a second pole piece layer of magnetic material to complete the magnetic head.

5,702,757

PROCESS FOR PRODUCING MAGNETIC RECORDING MEDIUM

Taro Ohmura, Miyagi, Japan, assignor to Sony Corporation, Tokyo, Japan

Filed Sep. 27, 1996, Ser. No. 722,639

Claims priority, application Japan, Sep. 29, 1995, 7-254258

Int. Cl.^{6} B05D *5/12;* **G11B** *5/845;* **C08K** *3/22*

U.S. Cl. 427—131 **7 Claims**

1. A method for making a magnetic coating composition, comprising the steps of:

intimately admixing and kneading a mixture of a finely divided magnetic powder having a major axis length of 0.1 μm or less as the sole powder component, a vinyl-chloride copolymer-based first binder resin having an average degree of polymerization of from about 100 to about 200 and containing from about 0.3 to about 3.0% by weight of quaternary ammonium salt groups, from about 0.1 to about 1.5% by weight hydroxyl groups and from about 1.0 to about 10% by weight of epoxy groups, based upon the weight of said copolymer, and a solvent, the weight ratio of said magnetic powder to said first binder resin being from about 6 to 15:1, said mixture having a solids content of from about 75 to about 95% by weight, until a substantially uniform first dispersion is obtained;

admixing said first dispersion with a mixture of a non-magnetic hard inorganic powder, a second resin binder and a solvent until a second relatively dilute dispersion is obtained; and

thereafter, admixing from about 0.05 to about 0.5 parts by weight, based on 100 parts by weight of said first binder resin, of a cross linking compound into said second dispersion to form said magnetic coating composition.

5,702,758

METHOD FOR COATING WITH FINNING PREVENTIVE AGENT

Fumio Hashiuchi; Yushirou Hirai, and Eiji Iwasaki, all of Oita-ken, Japan, assignors to Nippon Mining & Metals Co., Ltd., Tokyo, Japan

Division of Ser. No. 319,508, Oct. 6, 1994, Pat. No. 5,536,318. This application Jun. 6, 1995, Ser. No. 467,111

Claims priority, application Japan, May 9, 1994, 6-119537; Jul. 29, 1994, 6-197721

Int. Cl.^{6} B06D *7/22*

U.S. Cl. 427—133 **4 Claims**

1. A method of coating with a finning preventive agent comprising:

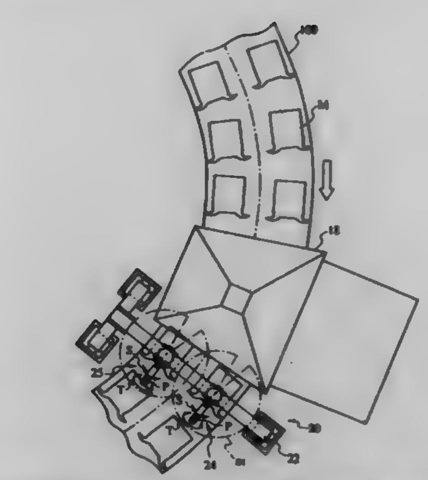

(a) providing a plurality of molds for casting anodes, each said mold having a recess which is defined by an upper plane of a base having a shape the same as the anode to be cast, and inner circumferential wall planes of edges surrounding an outer circumference of the base and protruding upwards from the upper plane of the base;

(b) transferring said plurality of molds in a circulating manner to stations including:

a casting station at which molten copper is poured into the molds;

a first cooling station at which the poured molten copper is cooled;

a pattern-drawing station at which the copper cooled at the first cooling station is taken out of the molds to form the anodes;

a second cooling station at which the molds from which the anodes have been taken out are cooled down to a temperature suited to a next stage;

a milk hood station at which a parting compound is sprayed over bottom planes of the molds: and

a finning preventive agent application station at which a finning preventive agent is applied onto the inner circumferential walls planes of the molds by a coating apparatus comprising an industrial robot; and

(c) applying said finning preventive agent onto the inner circumferential wall planes of the molds with at least one circulation of the mold.

5,702,759

APPLICATOR FOR FLOWABLE MATERIALS

Robert Ashton White, Nicholson, and Lester Steinbrecher, North Wales, both of Pa., assignors to Henkel Corporation, Plymouth Meeting, Pa.

Division of Ser. No. 363,116, Dec. 23, 1994. This application Jun. 7, 1995, Ser. No. 483,226

Int. Cl.^{6} B05C *5/02*

U.S. Cl. 427—142 **13 Claims**

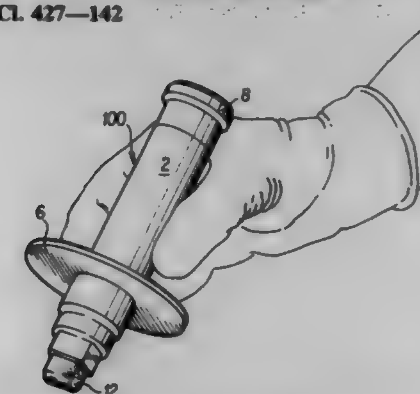

1. A method of repairing a damaged area of a conversion coating on a metal surface, comprising:

a) introducing a flowable material into a reservoir of an applicator for flowable material, said applicator having means for dispensing said material and applying it to a damaged area of a metal surface, and said applicator having an outwardly projecting guard structure, and

b) contacting said dispensing means with said damaged area to apply said flowable material onto said damaged area to repair the conversion coating on said damaged area by flowing over said damaged area wherein said flowable material comprises an aqueous acidic composition for forming a conversion coating on a metal surface.

5,702,760

PROCESS FOR COATING RUNNING WEBS

Martin Kustermann, Heidenheim, Germany, assignor to J.M. Voith GmbH, Heidenheim, Germany

Continuation of Ser. No. 301,785, Sep. 7, 1994, abandoned, which is a division of Ser. No. 72,330, Jun. 3, 1993, abandoned. This application May 10, 1996, Ser. No. 644,700

Claims priority, application Germany, Jun. 5, 1992, P4218596.3

Int. Cl.^{6} B05D *1/28*

U.S. Cl. 427—172 **8 Claims**

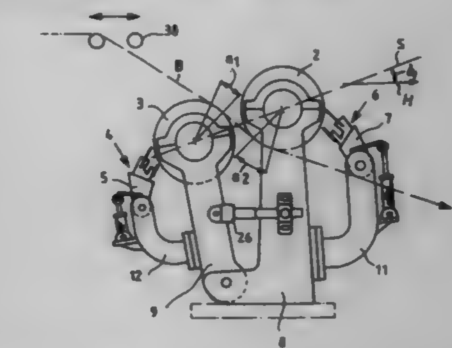

1. A process for applying a coating to each side of a running web, comprising the steps of:

providing two mutually parallel rolls, each roll having a shell, the rolls being directly coordinated with each other and having a mutually variable spacing for passing the running web therebetween, such that the rolls can be positioned to create a press gap for coating the web, and can be positioned so as not to form a press gap,

positioning the two rolls to not form the press gap,

applying a dosing of coating mixture to the respective shells of each of the rolls, and

dosing the coating mixture from each of said roll shells onto the respective side of the running web by having the web scrape off a surplus quantity of coating mixture from each respective roll shell, wherein the web contacts each said roll at a wrap angle and at a contact force, wherein the dosing on each of said web sides, due to a variable wrap angle of the roll shells by the web, occurs at a constant web pull through the contact force of the web onto the roll shells, which adjusts in a range of the wrap angle.

5,702,761

SURFACE PROTECTION OF POROUS CERAMIC BODIES

Robert A. DiChiara, Jr., San Diego, and Steven C. Butner, Poway, both of Calif., assignors to McDonnell Douglas Corporation, Huntington Beach, Calif.

Filed Apr. 29, 1994, Ser. No. 235,369

Int. Cl.^{6} B05D *7/22*

U.S. Cl. 427—181 **20 Claims**

1. A method of protecting the surface of a porous ceramic body, comprising the steps of:

furnishing a body made of a first ceramic material and having porosity extending through at least a portion of the body adjacent to a first surface of the body;
preparing a slurry of a mixture comprising
a ceramic powder made of a second ceramic material, and
a binding agent comprising silica particles;
impregnating the slurry into the first surface of the body so that substantially all of the slurry enters the porosity of the body and substantially none of the slurry resides on the first surface;
drying the slurry in place within the porosity of the body to leave a mixture of ceramic powder and binding agent within the porosity; and
firing the mixture of ceramic powder and binding agent to cause the binding agent to bind the ceramic powder to the interior of the porosity of the body.

5,702,762
MANUFACTURING METHOD OF AN ACTIVE MATERIAL SUITABLE FOR NON-SINTERED NICKEL ELECTRODES FOR USE IN ALKALINE STORAGE CELLS
Yoshitaka Baba, Naruto; Motoo Tadokoro, Itano-gun, and Akifumi Yamawaki, Naruto, all of Japan, assignors to Sanyo Electric Co., Ltd., Moriguchi, Japan
Filed Jun. 18, 1996, Ser. No. 665,703
Claims priority, application Japan, Jul. 4, 1995, 7-168563; Mar. 12, 1996, 8-054809
Int. Cl.^{6} B05D *7/00;3/12;1/02*
U.S. Cl. 427—212 **4 Claims**

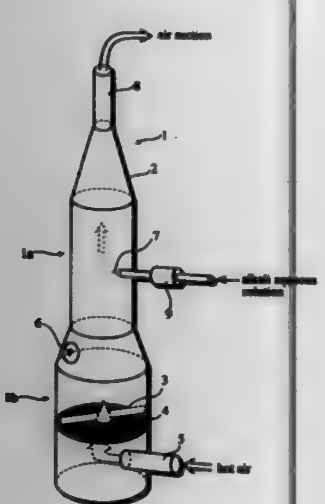

1. A method of making a nickel electrode active material for use in an alkaline storage cell, which comprises:
spraying particles composed of nickel hydroxide coated with a cobalt compound, said particles being held on a porous holder, with an alkali in aqueous solution; and
supplying air through pores of the holder to stir and heat the particles being sprayed with the aqueous solution to a temperature between 40° and 150° C.

5,702,763
SELECTIVE CODEPOSITION OF PARTICULATE MATTER AND COMPOSITE PLATED ARTICLES THEREOF
Nathan Feldstein, Princeton, N.J., assignor to Surface Technology, Inc., Trenton, N.J.
Continuation-in-part of Ser. No. 188,611, Jan. 24, 1994, abandoned, which is a continuation-in-part of Ser. No. 5,680, Jan. 19, 1993, abandoned. This application Feb. 15, 1995, Ser. No. 390,354
Int. Cl.^{6} B05D *1/18*
U.S. Cl. 427—241 **13 Claims**

1. A process for plating a substrate to form a composite plated coating on a surface thereof said process comprising contacting said surface of said substrate with a plating composition incorporating particulate matter insoluble with said plating composition to yield a composite plated coating on said surface with said particulate matter dispersed within said coating, said coating having a predetermined varied density of codeposited particulate matter from a first region along the surface of the substrate being plated to a second region thereof, said predetermined varied density of codeposited particulate matter between said first and second regions being achieved by continuously rotating said substrate during the plating process at a speed greater than that necessary to achieve a different varied density of codeposited particulate matter within said coating between said first and second regions.

5,702,764
METHOD FOR THE PREPARATION OF PYROLYTIC BORON NITRIDE-CLAD DOUBLE-COATED ARTICLE
Noboru Kimura, and Ryouji Iwai, both of Gunma-ken, Japan, assignors to Shin-Etsu Chemical Co., Ltd., Tokyo, Japan
Continuation of Ser. No. 357,858, Dec. 16, 1994, abandoned. This application Aug. 22, 1996, Ser. No. 701,563
Claims priority, application Japan, Dec. 22, 1993, 5-324777
Int. Cl.^{6} C23C *16/00*
U.S. Cl. 427—248.1 **3 Claims**

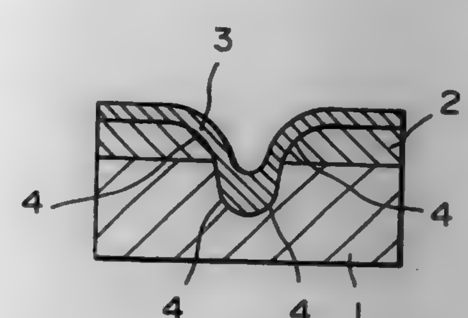

1. In a method for the preparation of a PBN-clad double-coated article comprising the steps of forming an undercoating layer of graphite on the surface of a substrate of boron nitride having an edged or recessed corner or ridge portion and then forming an overall cladding layer of pyrolytic boron nitride by chemical vapor deposition, the improvement which comprises smoothing the surface of the substrate to have a ruggedness not exceeding 200 μm in the height difference between the top of a protrusion and the bottom of a recess or chamfering and rounding the edged or recessed corner or ridge portion such that the radius of curvature thereof is not smaller than 0.5 mm.

5,702,765
METHOD OF APPLYING A FILM OF COATING MATERIAL TO A PAPER WEB INCLUDING SUCCESSIVE DOCTORING STEPS
Wayne A. Damrau, Wisconsin Rapid, and Michael A. Mayer, Plover, both of Wis., assignors to Consolidated Papers, Inc., Wisconsin Rapids, Wis.
Division of Ser. No. 260,488, Jun. 15, 1994, which is a continuation of Ser. No. 881,677, May 12, 1992, abandoned, which is a continuation-in-part of Ser. No. 648,655, Jan. 31, 1991, Pat. No. 5,112,653, which is a continuation-in-part of Ser. No. 375,241, Jul. 3, 1989, abandoned. This application Jun. 7, 1995, Ser. No. 479,286
Int. Cl.^{6} B05D *3/12*
U.S. Cl. 427—356 **5 Claims**

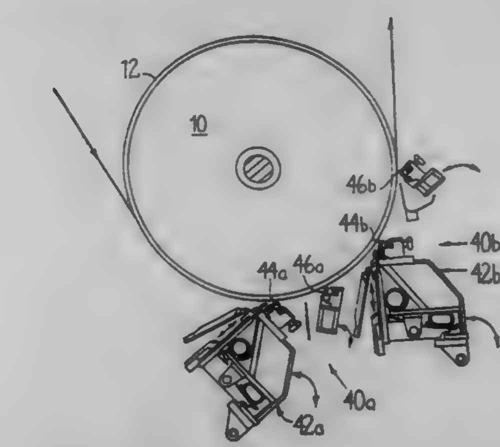

1. A method of applying a film of coating material to a paper web moving at speeds of at least 2000 feet per minute, said method comprising the steps of:
moving the web past a short dwell coater having an application zone with a limited dimension in the direction of movement of the web, the application zone being defined by having rear and side edges, a primary doctor blade located at a downstream edge of the application zone and a front edge spaced from the supported web and defining a gap between itself and the web at an upstream front edge of the application zone;
flowing an excess of coating liquid to the web and to form a liquid seal in the gap;
doctoring immediately the flowing coating liquid on the supported web with the primary doctor blade at the rear edge of the application zone, the primary doctor blade being biased under doctoring pressure against the coated web to form on the traveling web a layer of coating liquid having a wet film thickness sufficiently in excess of a desired wet film thickness to accommodate a subsequent final wet film doctoring of the coating liquid on the web; and
at a location spaced downstream from the rear edge of the application zone, but within about 0.003 to about 0.040 second following the primary doctoring step, subjecting the layer of coating liquid on the supporting web to a final doctoring by means of a final doctor blade biased against the coated web to move the excess coating from the web to level and smooth the coating retained on the web to the final wet film thickness and smoothness;
the wet film thickness of the coating liquid formed on the web by the primary doctor blade having a lower limit sufficiently in excess of the final wet film thickness to provide at the final doctor blade an excess amount of coating liquid adequate to cause substantially continuous run-off of excess coating liquid from the final blade to purge and flush the final doctor blade.

5,702,766
PROCESS OF FORMING A CERAMIC ARTICLE CONTAINING A CORE COMPRISING ZIRCONIA AND A SHELL COMPRISING ZIRCONIUM BORIDE
Gregory S. Jarrold, Henrietta; Dilip K. Chatterjee, and Syamal K. Ghosh, both of Rochester, all of N.Y., assignors to Eastman Kodak Company, Rochester, N.Y.
Filed Dec. 20, 1996, Ser. No. 770,447
Int. Cl.^{6} B05D *3/00;* **C04B** *35/488*
U.S. Cl. 427—376.1 **26 Claims**

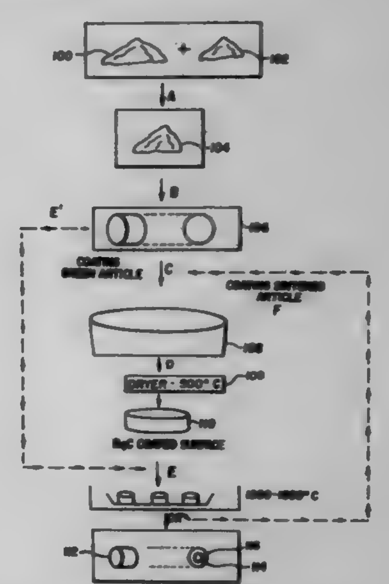

1. A method for preparing an electrically conductive ceramic article having a core/bulk of tetragonal zirconia alloy and a shell/surface comprising zirconium boride comprising:
i. coating a zirconia or zirconia alloy green body with a boron carbide slurry; and
ii. sintering in an argon atmosphere at between 1200° C. to 1600° C.

5,702,767
NON-AMINIC PHOTORESIST ADHESION PROMOTERS FOR MICROELECTRONIC APPLICATIONS
William R. Peterson, Phoenix, Ariz., and Craig M. Stauffer, Sunnyvale, Calif., assignors to Complex Fluid Systems, Inc., Santa Clara, Calif.
Continuation of Ser. No. 343,163, Nov. 22, 1994, abandoned. This application Nov. 27, 1995, Ser. No. 562,725
Int. Cl.^{6} B05D *1/36;3/04;5/00*
U.S. Cl. 427—407.1 **20 Claims**

1. A method for improving the adherence of a polymeric material to an inorganic, unprimed substrate comprising,
priming said substrate with at least one organosilane compound having at least one alkylsilyl moiety and at least one hydrolyzable leaving group bound to silicon;
reacting said at least one organosilane compound during priming with said substrate under conditions sufficient to silylate said substrate with a surface layer comprising the alkylsilyl moiety, wherein said hydrolyzable leaving group reacts with said substrate to form by-products having a pH less than or equal to about 7; and
applying said polymeric material to said silylated substrate.

5,702,768
METHOD OF USE OF A COATING COMPOUND IN VESSELS, AND A COATING COMPOUND FOR VESSELS
Michael L. Orr, Pocatello, Id., assignor to J. R. Simplot Co., Pocatello, Id.
Continuation-in-part of Ser. No. 677,557, Jul. 8, 1996. This application Oct. 29, 1996, Ser. No. 738,790
Int. Cl.⁶ B05D *1/02*
U.S. Cl. 427—421 **28 Claims**

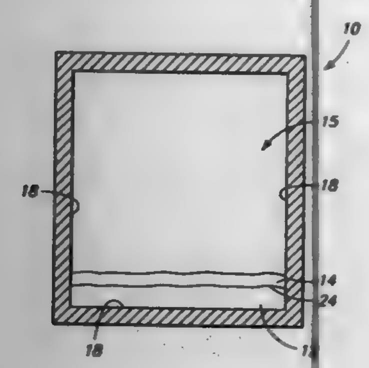

9. A treatment method of reducing corrosion of a vessel sidewall surface comprising utilization of a quaternary amine to form a protective layer on the vessel sidewall surface.

5,702,769
METHOD FOR COATING A SUBSTRATE WITH A SLIDING ABRASION-RESISTANT LAYER UTILIZING GRAPHITE LUBRICANT PARTICLES
John Antony Peters, Winterthur, Switzerland, assignor to Sulzer Innotec AG, Winterthur, Switzerland
Filed Dec. 28, 1995, Ser. No. 579,751
Claims priority, application European Pat. Off., Feb. 2, 1995, 95810072
Int. Cl.⁶ C23C *4/06*
U.S. Cl. 427—451 **8 Claims**

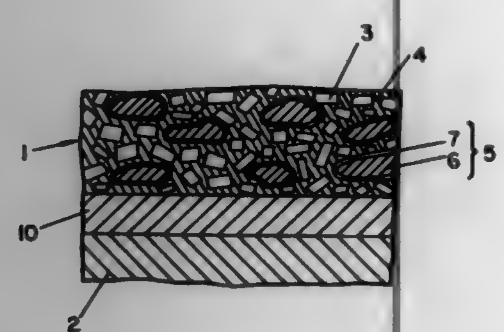

1. A thermal spray process for coating a substrate with a sliding abrasion resistant layer for providing the substrate with resistance to wear comprising the steps of forming solid, graphite lubricant particles; surrounding the lubricant particles with a protective layer of a non-carbide forming metal such that the resulting lubricant particles have approximately 25 weight percent of graphite; mixing the resultant lubricant particles with a binder and other particles made from a relatively hard material into a spray powder so that the resulting lubricant particles comprise about 10 to 20 weight percent of the powder; and spraying the powder onto the substrate to form the coating.

5,702,770
METHOD FOR PLASMA PROCESSING
David Alan Martin, Raleigh, N.C., assignor to Becton, Dickinson and Company, Franklin Lakes, N.J.
Filed Jan. 30, 1996, Ser. No. 593,975
Int. Cl.⁶ B05D *1/04*
U.S. Cl. 427—475 **19 Claims**

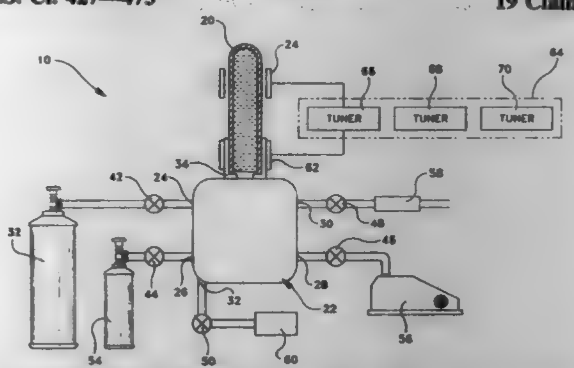

1. A method for applying a barrier film coating to the interior wall surface of a plastic substrate comprising:
(a) positioning a plastic substrate having an open end, a closed end, an exterior, an interior and an external and interior wall surface so that said open end is connected to a vacuum manifold system having a monomer supply source, an oxider supply source comprising air, oxygen or nitrous oxygen and a vacuum supply source;
(b) positioning the external wall surface of said plastic substrate with an electrode assembly;
(c) evacuating said interior of said substrate;
(d) delivering a monomer gas to said interior of said substrate;
(e) delivering oxygen to said interior of said substrate;
(f) delivering an alternating electrical current to said electrode; and
(g) ionizing said gases so as to form a plasma whereby a barrier film coating is applied to the interior wall surface of said substrate.

5,702,771
ACTIVATED ADHESIVE SYSTEM
Adele C. Shipston; Joseph W. Langen, and Nancy G. Mitchell, all of 300 Lang Blvd., Grand Island, N.Y. 14072-1697
Division of Ser. No. 199,877, Feb. 22, 1994. This application May 25, 1995, Ser. No. 450,701
Int. Cl.⁶ C08J *7/18*
U.S. Cl. 427—491 **13 Claims**

1. A method for producing a pressure sensitive adhesive comprising:
coating a substrate over at least a portion of at least one side thereof with a non-tacky polymeric composition capable of being activated upon exposure to an activating treatment; and
exposing the coated substrate to an activating treatment comprising ultraviolet light, corona charging, ultrasound or combinations thereof to activate the polymeric composition, thereby producing a tacky pressure sensitive adhesive.

5,702,772
METHOD FOR IDENTIFYING AND PROTECTING AN ACTIVATED PLASTIC SURFACE
Jon M. Skelly, Ypsilanti, and Lawrence F. Wilski, Warren, both of Mich., assignors to Ford Motor Company, Dearborn, Mich.
Division of Ser. No. 565,196, Oct. 6, 1995, abandoned. This application Feb. 5, 1997, Ser. No. 794,980
Int. Cl.⁶ H05H *1/00*
U.S. Cl. 427—536 **4 Claims**

1. A method of manufacturing a painted plastic article, comprising the steps of:

activating one or more portions of a surface of a plastic substrate;
applying a solution containing an organic film-forming substance onto said substrate, said solution coating only the activated portions of said substrate surface;
drying said solution to form a temporary protective film on the activated portions of said surface, thereby rendering the activated portions less susceptible to abrasion or disruption during handling;
removing said temporary protective film to re-expose the activated surface portions of said substrate; and
painting the activated surface portions of said substrate.

5,702,773
METHOD FOR PREPARING A FLUORO-CONTAINING POLYIMIDE FILM
Kazuhiko Endo, Tokyo, Japan, assignor to NEC Corporation, Tokyo, Japan
Filed Jun. 13, 1995, Ser. No. 487,243
Claims priority, application Japan, Jun. 13, 1994, 6-129983; Aug. 30, 1994, 6-204085
Int. Cl.⁶ H05H *1/20*
U.S. Cl. 427—573 **8 Claims**

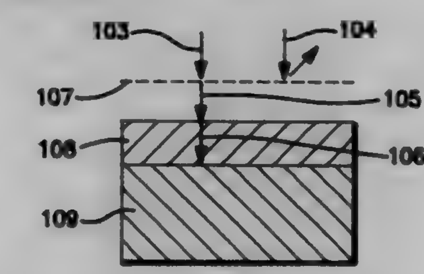

1. A method for blending fluorine into a polyimide free of fluorine comprising the steps of:
generating fluorine radicals in a fluorine based gas;
removal of any charge particles from said gas to leave said fluorine radicals in said gas; and
exposing a polyimide free of fluorine to an irradiation of said fluorine radicals so that said irradiated fluorine radicals penetrate into said polyimide without any reaction between said irradiated fluorine radicals and said removed charge particles on a surface of said polyimide.

5,702,774
METHOD OF PREVENTING WICKING
Michael F. Griffin, and James L. Pajan, both of Simpsonville, S.C., assignors to Westinghouse Air Brake Company, Wilmerding, Pa.
Division of Ser. No. 666,988, Mar. 11, 1991, abandoned. This application Apr. 13, 1994, Ser. No. 227,151
Int. Cl.⁶ B29C *35/08*
U.S. Cl. 427—598 **17 Claims**

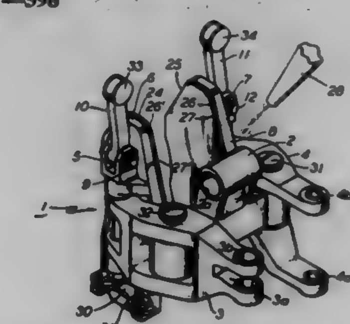

1. A method of preventing wicking of paint while protecting a machined brake shoe receiving surface of a brake head from being painted, comprising the steps of:
(a) selecting a flexible sheet of magnetic material having a magnetic attraction at least sufficient to prevent wicking of paint,
(b) cutting a reusable magnetic masking member from said flexible sheet to conform to the machined brake shoe receiving surface,
(c) placing said cut reusable magnetic masking member against the machined brake shoe receiving surface so it is magnetically attracted thereto,
(d) painting the brake head including said cut reusable magnetic masking member,
(e) removing said cut reusable magnetic masking member from the machined brake shoe receiving surface of the brake head so that steps (c), (d), and (e) may be repeated.

5,702,775
MICROELECTRONIC DEVICE PACKAGE AND METHOD
Michael John Anderson, Phoenix; Gary Carl Johnson, Tempe; Mark Phillip Popovich, Gilbert, all of Ariz., and Jeffrey Eames Christensen, Scottsdale, Ill., assignors to Motorola, Inc., Schaumburg, Ill.
Filed Dec. 26, 1995, Ser. No. 578,801
Int. Cl.⁶ B32B *3/00*
U.S. Cl. 428—1 **12 Claims**

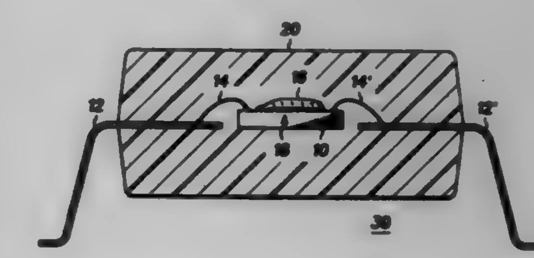

2. An acoustic wave device package comprising:
a first material having a temperature coefficient of expansion of one hundred parts per million per degree Centigrade or more disposed above a gap over a surface of an acoustic wave device; and
a second material having a temperature coefficient of expansion of less than thirty parts per million per degree Centigrade disposed surrounding said first material and atop said acoustic wave device.

5,702,776
ORGANIC POLYSILANE COMPOSITION, COLORED MATERIAL, METHOD OF MANUFACTURING COLORED MATERIAL AND LIQUID CRYSTAL DISPLAY
Shuzi Hayase, Yokohama; Yoshihiko Nakano, Tokyo, and Rikako Kani, Yokohama, all of Japan, assignors to Kabushiki Kaisha toshiba, Kawasaki, Japan
Filed Mar. 8, 1996, Ser. No. 612,580
Claims priority, application Japan, Mar. 13, 1995, 7-052141; Dec. 26, 1995, 7-338943
Int. Cl.⁶ G02F *1/1335;* **G03F** *9/00*
U.S. Cl. 428—1 **16 Claims**

1. A colored material provided with a colored layer comprising a silicon-based matrix, comprised of a photo-oxidized organic polysilane and containing a coloring component wherein the number of silicon atom bonded through only one of its bonds to an organic

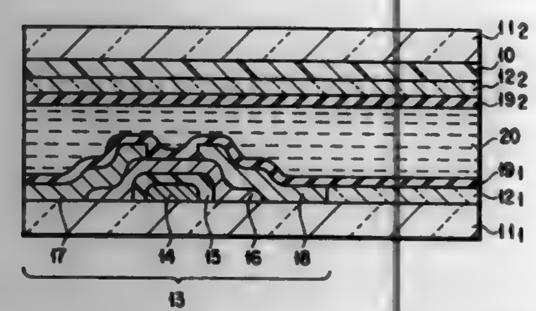

residual group is 5 atomic % or more based on total number of silicon atoms in the silicon-based matrix.

5,702,777

SILANE COUPLERS CONTAINING CYCLIC STRUCTURAL ELEMENTS AS ALIGNMENT FILMS

Norbert Rösch, Geisenheimer Strasse 95, D-60529 Frankfurt/Main, and Peter Wegener, Am Eichkopf 4, D-61462 Königstein, both of Germany

Continuation of Ser. No. 201,557, Feb. 24, 1994, abandoned. This application May 20, 1996, Ser. No. 650,591

Claims priority, application Germany, Feb. 26, 1993, 43 05 970.8

Int. Cl.^{6} G02F *1/1337*

U.S. Cl. 428—1 **10 Claims**

1. An alignment film for liquid crystals, consisting of one or more compounds of the formula II

$$C_y—S_p—A_n \quad (II)$$

in which

C_y is a mediocyclic or macrocyclic carbon ring having 8 or more ring atoms;

S_p is an alkyl group having from 1 to 20 carbon atoms, in which one or more non-adjacent —CH_2— groups may be replaced by —O—, —S—, —CO—, —O—CO—, —NH—CO—, —O—COO—, —NH—CO—NH—, —NH—CO—O—, —SO_2—, —$Si(CH_3)_2$—, —CH═CH— or —C≡C—;

A_n is $SiX^1X^2X^3$, wherein

X^1 is a single bond, and

X^2 and X^3,

independently of one another, are a single bond or a C_1–C_{10}-alkyl or C_1–C_{10}-alkoxy group,

where the compound(s) of the formula (II) are bonded to an oxidic layer, which is an electrode or an insulating layer, via the single bond(s) of the group A_n.

5,702,778

GIFT-PACKAGE ORNAMENT

Thomas Gary Andonian, P.O. Box 38473, Los Angeles, Calif. 90038

Filed Jun. 28, 1996, Ser. No. 671,948

Int. Cl.^{6} A63H *33/26*

U.S. Cl. 428—5 **16 Claims**

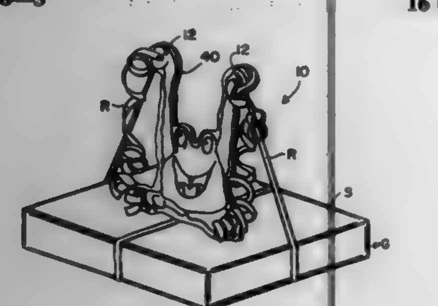

1. A gift-package ornament for decorating a gift package, comprising:

an upright figure; and

a flexible base, said flexible base coupled to said upright figure and attachable to the gift package, said flexible base able to hold said upright figure upright and away from a surface of the gift package; whereby

the gift package may be decorated by attaching said upright figure to the gift package, said flexible base stably holding said upright figure to the gift package.

5,702,779

PLASTIC PANEL ASSEMBLY FOR USE IN A VEHICLE

Robert John Siebelink, Jr., Ann Arbor, and Lloyd G. Racine, ShelbyTownship, both of Mich., assignors to Webasto Sunroofs Inc, Rochester Hills, Mich.

Filed Jul. 17, 1995, Ser. No. 503,013

Int. Cl.^{6} B60J *7/043*

U.S. Cl. 428—14 **11 Claims**

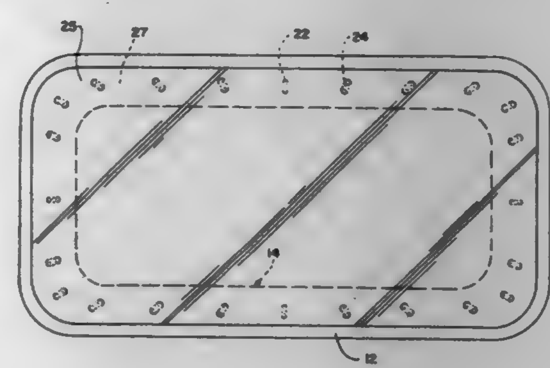

1. A plastic panel assembly for use in a vehicle comprising:

a frame structure defining a central opening therein disposed in a plane,

a plastic panel structure disposed with respect to said frame structure so that a marginal peripheral portion thereof extending generally in the direction of extent of said plane is coextensive with a marginal peripheral portion of said frame structure and a central portion thereof extends in covering relation with said central opening, said frame structure having a coefficient of thermal expansion less than that of said plastic panel structure,

a series of at least three pin and slot connections extending operatively between the coextensive peripheral portions of said structures and disposed in spaced relation therealong for retaining the coextensive peripheral portions of said structures together,

each pin and slot connection including a slot formed in one of said structures and a pin secured to another one of said structures and extending transversely through the slot formed in said one structure, each said slot having a longitudinal axis extending in a direction toward a common point,

each pin and slot connection being constructed and arranged to prevent relative movement of said pin within said slot along said plane in one direction within which the pin and slot connection is disposed while allowing relative movement of said pin within said slot along said plane generally in directions away from and toward said common point,

the plurality of pin and slot connections being constructed and arranged so as to enable the plastic panel structure to expand and contract with respect to said central opening in response to changes in temperature within a range of operating temperatures while providing a stable connection in any direction along said plane between the coextensive peripheral portions of said structures throughout the range of temperature changes.

5,702,780

SCENTED ROCK AND METHOD FOR MAKING THE SAME

Norman Andrew Tiller, 452 Kinghorn Dr., Nampa, Id. 83651, and Louis George Grundel, 810 I St., Rupert, Id. 83350

Filed Oct. 20, 1995, Ser. No. 546,479

Int. Cl.^{6} B32B *5/16;* **C14C** *9/00*

U.S. Cl. 428—15 **14 Claims**

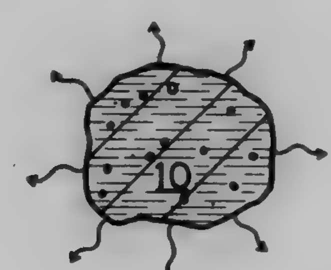

14. A scented rock or mineral which comprises:

a dehydrated rock or mineral having pores; and

scented fluid impregnated into the pores of the rock or mineral.

5,702,781

HANGING ORNAMENT FOR SIMULATING HUMAN MOVEMENT

Thomas Earl Barker, 5940 Bishop Dale, Memphis, Tenn. 38115

Filed Sep. 15, 1995, Ser. No. 529,027

Int. Cl.^{6} A63H *3/00*

U.S. Cl. 428—16 **8 Claims**

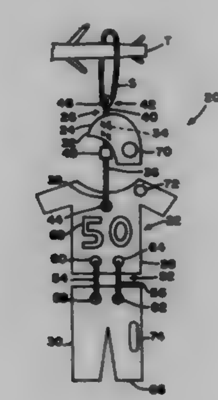

1. An ornament for hanging from a support, said ornament comprising;

(a) a body portion;

(b) a headpiece portion, said headpiece portion having a longitudinal bore therethrough; and

(c) hanging means for hanging said body portion from the support and for mounting said headpiece portion above said body portion, said hanging means including an elongated securing tiepiece having first and second ends, said first end being secured to said body portion, said second end having securing means for securing said ornament to said support, said tiepiece passing through said bore through said headpiece portion.

5,702,782

TWO LAYER EXTRUSION MOLDING

Shinichi Goto; Masao Kobayashi; Yasuhisa Kuzuya, and Hidehito Ichikawa, all of Aichi, Japan, assignors to Toyoda Gosei Co., Ltd., Nishikasugai-gun, Japan

Continuation of Ser. No. 329,311, Oct. 26, 1994, abandoned. This application Aug. 14, 1996, Ser. No. 700,580

Claims priority, application Japan, Oct. 29, 1993, HEI 5-272045

Int. Cl.^{6} B32B *23/08*

U.S. Cl. 428—31 **4 Claims**

1. A side-molding for use in a vehicle, said side molding being made by a two layer extrusion molding, said side molding comprising:

a core element formed of resin material having a first degree of hardness, said core including an outer surface provided with an adhesion enhancing, axially extending pattern having a depth ranging between about 5 to 25 μm and

an exterior skin formed on the outer surface of said core of resin material having a degree of hardness less than said first degree of hardness.

5,702,783

FOOD CASING OF NONDERIVATIZED CELLULOSE

Myron Donald Nicholson, Lemont; Edward Makoto Kajiwara, Park Ridge, and Paul Edmund DuCharme, Jr., Tinley Park, all of Ill., assignors to Viskase Corporation, Chicago, Ill.

Continuation-in-part of Ser. No. 135,647, Oct. 14, 1993, which is a division of Ser. No. 822,506, Jan. 17, 1992, Pat. No. 5,277,857. This application Aug. 16, 1995, Ser. No. 515,880

Int. Cl.^{6} A22C *13/02*

U.S. Cl. 428—34.8 **12 Claims**

1. A tubular cellulose film comprising a food casing which is a shirred seamless tubular film of nonderivatized cellulose precipitated from an extruded thermoplastic cellulose solution composed of cellulose, a tertiary amine oxide and water, said tubular film having a diameter of at least 14.5 mm containing a water soluble softener and said tubular film having chains of cellulose molecules arranged in a nonrandom fashion such that said chains have order both in the direction of said chains and in a plane normal to the chain direction as manifest by an x-ray diffraction pattern for said film, said pattern having equatorial spots at spacings of about 8.6 Å and about 17.1 Å, four meridional arcs at spacings of from about 11.7 Å to about 2.6 Å and a diffuse ring having its equatorial span greater than its meridional span.

5,702,784

POLYPROPYLENE HEAT SHRINKABLE FILM

Masayuki Nishimura; Kiyoshi Sogabe; Hiroyuki Tanaka, and Shinji Arai, all of Moriyama, Japan, assignors to Gunze Limited, Ayabe, Japan

Continuation of Ser. No. 297,859, Aug. 30, 1994, abandoned. This application Sep. 13, 1996, Ser. No. 712,675

Claims priority, application Japan, Sep. 3, 1993, 5-220083

Int. Cl.^{6} B65B *53/00;* **C08L** *23/14*

U.S. Cl. 428—34.9 **3 Claims**

1. A polypropylene heat shrinkable mono-layer film consisting essentially of a blend of propylene-butene copolymer and at least one polymer selected from the group consisting of an ethylene-propylene random copolymer and an ethylene-propylene-butene random polymer, said heat shrinkable film resulting from simultaneous biaxial stretching in a tubular state at a stretching ratio of from 2.0 to 3.5 times in each of the machine direction and the transverse direction under wet heating wherein the tensile elongation at breaking of the film is more than 200%, the tensile modulus of elasticity of the film is less than 9 kg/mm^2 and the film shrinks

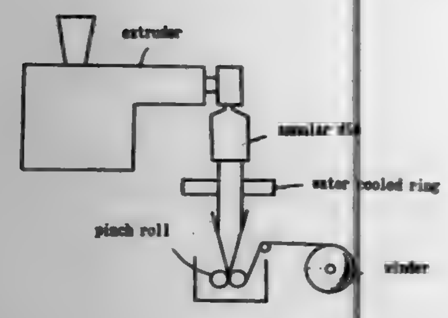

more than 8% in both the machine and the transverse direction when said film is immersed for 30 seconds in 80° C. glycerine.

5,702,785
ELASTIC SEALING FOIL
Markus Knebler, Bad Liebenzell, and Peter Hofmann, Neuhausen, both of Germany, assignors to Dr. Ing. h.c.F. Porsche AG, Germany
Filed Apr. 24, 1995, Ser. No. 426,800
Claims priority, application Germany, Apr. 23, 1994, P 44 14 302.8
Int. Cl.[6] B60R *11/02*
U.S. Cl. 428—35.2 **16 Claims**

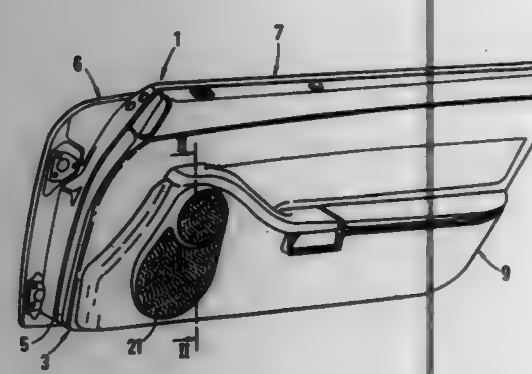

1. An a arrangement for receiving an accessary part in an inside panel of a vehicle door, comprising:

an elastic sealing foil which is formed into a receptacle that can be inserted in an opening in said inside panel;

said receptacle being displaceable from a manufactured position into an installed position in which it projects through the opening of the inside door panel into an interior hollow space of a door body of said vehicle door and is disposed to envelope an accessory part inserted therein, providing a watertight seal between said accessory part and said hollow space of the door body;

in said manufactured position said receptacle comprises upper and lower formed portions of the sealing foil which are arranged above one another, each of said upper and lower formed portions having an approximately U-shaped cross-sectional profile, and extending in opposite directions, the formed portions sharing a common wall section;

in said installed position, the receptacle extends downward beyond the opening of the inside door panel, with at least a section thereof resting on a side of the inside door panel which faces the hollow space; and

said receptacle being displaceable between said manufactured position and said installed position by an outwardly and downwardly directed force applied to the lower formed portion.

5,702,786
PROCESS FOR PREPARING THERMOPLASTIC POLYOLEFIN RESIN ARTICLES OF REDUCED HYDROCARBON PERMEABILITY
Ronald T. Robichaud, Westerville, Ohio, assignor to Greif Bros. Corporation, Delaware, Ohio
Filed Apr. 22, 1996, Ser. No. 635,693
Int. Cl.[6] B29D *22/00*
U.S. Cl. 428—35.7. **9 Claims**

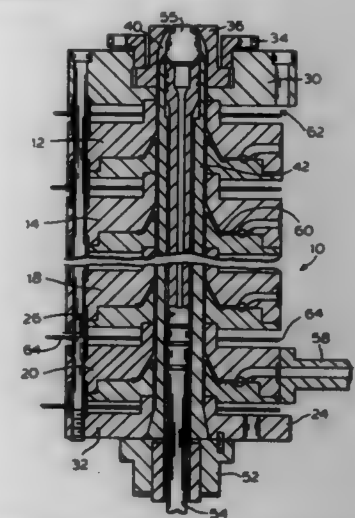

1. A process for preparing polyethylene resin containing articles of reduced hydrocarbon permeability, which comprises;

providing a thermoplastic resin composition, which comprises;

a major proportion of a polyethylene resin;

a minor proportion of polyvinylidene fluoride: and

a binding proportion of aluminum stearate;

feeding the resin composition to a heating zone, said zone being maintained at a temperature above the first order phase transition temperature of the polyethylene, whereby said fed composition is thermally plasticized;

continuously passing the plasticized composition to a shaping zone wherein said plasticized composition is shaped in the form of an article having first and second surfaces;

cooling the article first surface to a temperature between the first and the second order phase transition temperatures of the polyethylene, while maintaining the second surface at a temperature above the first order phase transition temperature for a period of time sufficient to form sperulites of crystals adjacent the first surface and then

cooling the whole of the article to room temperture.

5,702,787
MOLDED ARTICLES HAVING AN INORGANICALLY FILLED ORAGNIC POLYMER MATRIX
Per Just Andersen, and Simon K. Hodson, both of Santa Barbara, Calif., assignors to E. Khashoggi Industries, Santa Barbara, Calif.
Continuation of Ser. No. 218,967, Mar. 25, 1994, Pat. No. 5,545,450, which is a continuation-in-part of Ser. No. 95,662, Jul. 21, 1993, Pat. No. 5,385,764, which is a continuation-in-part of Ser. No. 982,383, Nov. 25, 1992, abandoned, which is a continuation-in-part of Ser. No. 105,741, Aug. 10, 1993, which is a continuation-in-part of Ser. No. 105,352, Aug. 10, 1993, Pat. No. 5,676,905, which is a continuation-in-part of Ser. No. 152,354, Nov. 19, 1993, Pat. No. 5,508,072, said Ser. No. 95,662Ser. No. 982,383, Nov. 25, 1992, abandoned, Ser. No. 105,741, Aug. 10, 1993, Ser. No. 105,352, Aug. 10, 1993, Pat. No. 5,676,905, and Ser. No. 152,354, Nov. 19, 1993, Pat. No. 5,508,072, , each is a continuation-in-part of Ser. No. 929,898, Aug. 11, 1992, abandoned. This application Jun. 7, 1995, Ser. No. 478,281
Int. Cl.[6] B32B *5/02;* **B65D** *85/84*
U.S. Cl. 428—36.4 **59 Claims**

1. An article of manufacture comprising an inorganically filled matrix including a substantially homogeneous mixture of organic

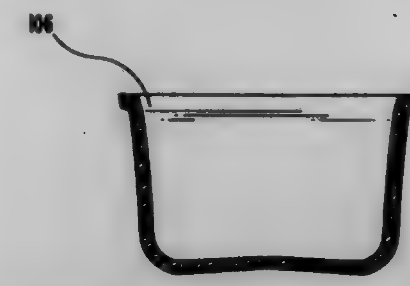

binder and inorganic aggregate, the organic binder comprising a water-dispersible organic polymer binder selected from the group consisting of polysaccharides, proteins, water-soluble polymers, derivatives of the foregoing, and mixtures of the foregoing, the inorganic aggregate having a concentration in a range from about 20% to about 95% by weight of total solids in the inorganically filled matrix, the inorganically filled matrix including a fibrous material substantially homogeneously dispersed therein, wherein the inorganically filled matrix has a thickness in a range from about 0.01 mm to about 1 cm and degrades after prolonged exposure to water.

5,702,788

Patent Not Issued For This Number

5,702,789
SET IN SHEET FORM AS WELL AS APPARATUS AND METHOD FOR PRODUCING SUCH A SET
Paul Fernandez-Kirchberger, München, and Joachim Seidl, Rechtmehring, both of Germany, assignors to MTL Modern Technologies Lizenz GmbH, Munich, Germany
Filed May 23, 1995, Ser. No. 447,973
Claims priority, application Germany, Jun. 8, 1994, 44 20 027.7; Sep. 13, 1994, 44 32 544.4; Mar. 8, 1995, 295 03 990 U
Int. Cl.[6] B32B *3/10*
U.S. Cl. 428—40.1 **10 Claims**

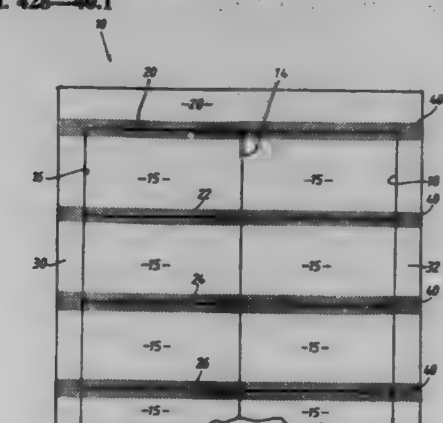

1. A set in sheet form comprising:

at least one information carrier card;

carrier material lying in the same plane as said card forming at least a first edge region of the set, said card being completely separated from said carrier material and isolated from any other adjacent components of the set including any additional adjacent carrier cards by means of uninterrupted cuts provided therebetween; and

at least one adhesive strip having a predetermined narrow width and coated with releasable glue on one side thereof, said adhesive strip covering at least part of said cuts to adhere the components of said set releasably to one another across said cuts, said card having a width in a direction perpendicular to the course of said adhesive strip that is a multiple of said width of said adhesive strip, said first edge region of said carrier material being aligned generally perpendicularly to the course of said adhesive strip, all such adhesive strips having ends adhered to said first edge region of said carrier material.

5,702,790
WATER-ADDED EVAPORATION PROCESS FOR MAKING THIN PLASTIC LETTERING WEBS
Robert James Liebe, Jr., 1577 Kehrs Mill Rd., Chesterfield, Mo. 63005
Continuation-in-part of Ser. No. 134,184, Oct. 8, 1993, Pat. No. 5,441,785, which is a continuation-in-part of Ser. No. 856,128, Mar. 23, 1992, abandoned, which is a continuation-in-part of Ser. No. 636,877, Jan. 2, 1991, Pat. No. 5,112,423. This application Aug. 10, 1995, Ser. No. 513,388
Int. Cl.[6] B32B *9/00*
U.S. Cl. 428—46 **5 Claims**

1. For use as thin flexible signage-lettering material adapted for computerized cutting, the process of making a pigmented display layer, comprising the steps of:

mixing water-based polymers of polyurethane or acrylic composition, or mixtures thereof, with water-soluble or water-dispersible pigment and functional additives in a predetermined quantity to form a substantially non-flowing mixture, together with such amount of water as renders the resultant mixture substantially fluid and such amount of viscosity-increasing agent as makes it machine-spreadable,

then machine-spreading such resultant mixture on a transparent release sheet or preliminary foundation sheet at such spread depth as will, on subsequent drying, shrink, coalesce and harden to a chosen film thickness, such machine spread depth being determined according to the equation

$$\frac{\text{Spread depth}}{\text{chosen thickness}} = \frac{\text{volume ingredients plus added water}}{\text{dry volume of ingredients}}$$

and

evaporating all water therefrom,

whereby to shrink and coalesce the mixture into a thin, pigmented polymer display layer on such foundation sheet or release sheet, and by such coalesce, to cause preliminary adherence to a sheet, all without substantially exceeding the evaporation temperature of water.

5,702,791
FURNITURE PROTECTOR DEVICE
Jim Zegeer, 1211 Lyndale Dr., Alexandria, Va. 22308
Filed Oct. 24, 1990, Ser. No. 602,765
Int. Cl.[6] B65D *65/02;85/00;* **B32B** *3/00*
U.S. Cl. 428—53 **17 Claims**

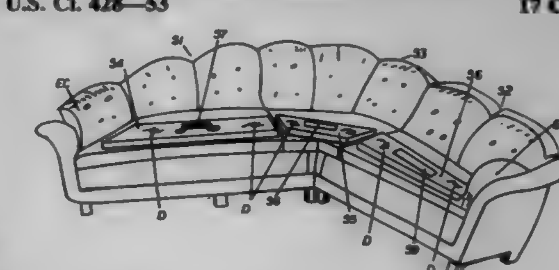

1. A furniture protector device for protecting the fabric on sofas and stuffed chair furniture having a seating space from damage by dogs, comprising, in combination with said seating space:

one or more rigid panel members having a width to span a predetermined portion, but not all, of the front to back portion of said seating space and a length to span approximately the width of said seating space, and

a decorative means on said one or more rigid panel members.

5,702,792
OPTICAL RECORDING MEDIUM
Tetsuya Iida; Satoshi Jinno, and Takanobu Higuchi, all of Tsurugashima, Japan, assignors to Pioneer Electronic Corporation, Tokyo, Japan
Filed Jul. 1, 1996, Ser. No. 673,317
Claims priority, application Japan, Jul. 14, 1995, 7-201322
Int. Cl.^{6} B32B *3/00*
U.S. Cl. 428—64.1 **2 Claims**

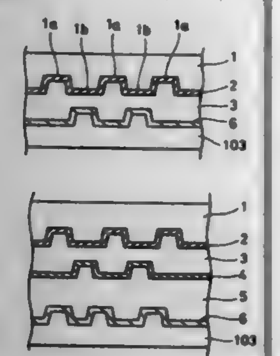

1. An optical recording medium of a multi-layer type comprising:
a substrate
a single or plural spacer layers each carrying pits and/or grooves;
a single or plural reflective layers layered on the spacer layers; and
wherein said reflective layer is made of a material including —OH groups and a surface of said reflecting layer furthest from said substrate contacting with said spacer layer is provided with a silane coupling treatment.

5,702,793
MAGNETO-OPTICAL RECORDING MEDIUM, DISK AND METHOD OF MANUFACTURING THE SAME
Kenji Shimokawa; Hitoshi Dohnomae; Toshio Mukai, all of Kawasaki, and Kengo Shimanoe, Sagamihara, all of Japan, assignors to Nippon Steel Corporation, Tokyo, Japan
Filed Feb. 24, 1994, Ser. No. 201,385
Claims priority, application Japan, Feb. 25, 1993, 5-060884; Mar. 31, 1993, 5-096718
Int. Cl.^{6} G11B *5/66*
U.S. Cl. 428—64.3 **24 Claims**

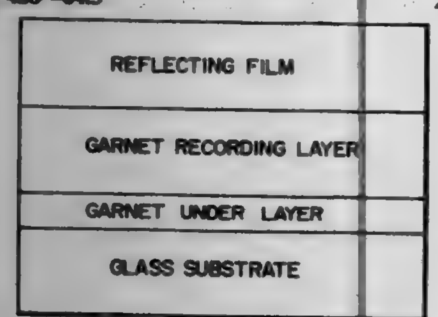

1. A magneto-optical recording medium comprising:
a substrate;
a first layer of polycrystalline garnet film formed on said substrate, for serving as an under layer, said first layer having a Curie temperature lower than a predetermined temperature, said predetermined temperature being within a range from −10° C. to +50° C., so that said first layer has a non-magnetic characteristic at said predetermined temperature; and
a second layer of polycrystalline garnet film, formed on said first layer, for recording information, said second layer having a Curie temperature higher than said predetermined temperature so that said second layer has a magnetic characteristic at said predetermined temperature.

5,702,794
LAMINATED POLYESTER FILM FOR MAGNETIC RECORDING MEDIUM
Masahiro Hosoi, Tokyo; Yasuhiko Saito, Matsuyama; Yasuhiro Saeki, Sagamihara, and Masami Etchu, Yokohama, all of Japan, assignors to Teijin Limited, Osaka, Japan
Continuation of Ser. No. 166,830, Dec. 15, 1993, abandoned. This application Oct. 31, 1995, Ser. No. 551,252
Claims priority, application Japan, Dec. 17, 1992, 4-337169
Int. Cl.^{6} B32B *27/08;27/30;27/36;27/40*
U.S. Cl. 428—65.3 **23 Claims**

1. A magnetic recording medium comprising of a magnetic recording layer and a biaxially oriented laminated polyester base film wherein the base film comprises a layer (A) of a polyester consisting essentially of 2,6-naphthalenedicarboxylic acid and ethylene glycol components, and a layer (B) of a copolyester consisting essentially of 2,6-naphthalenedicarboxylic acid, ethylene glycol, and diethylene glycol components, the copolyester containing 1–5% by weight of the diethylene glycol component, based on the weight of the layer (B) copolyester, the layer (A) being provided with the layer (B) on one surface or both surfaces of layer (A).

5,702,795
SPIRALLY WOVEN FABRIC, AND PREPREG AND ROTARY BODY EACH USING SAID SPIRALLY WOVEN FABRIC THEREIN
Takayuki Matsumoto; Tetsufumi Ikeda, and Akiyoshi Kojima, all of Yokohama, Japan, assignors to Nippon Oil Co., Ltd., Tokyo, Japan
Filed Feb. 12, 1997, Ser. No. 798,120
Claims priority, application Japan, Feb. 21, 1996, 8-057010
Int. Cl.^{6} D03D *3/00*
U.S. Cl. 428—66.6 **9 Claims**

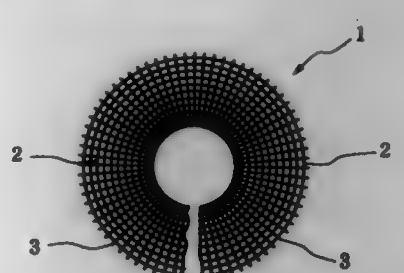

1. A spirally woven fabric composed of interwoven warps and wefts and having the warps arranged in a spiral direction and the wefts arranged in the radial direction, characterized in that the warps arranged more outside in the radial direction of said fabric have an increasingly greater specific elastic modulus than those arranged more inside in the radial direction of said fabric.

5,702,796
MODIFIED MULTIPHASE BITUMEN COMPOSITION AND FLOOR COVERING
Andrew Thompson, Belfast, United Kingdom, assignor to Interface, Inc., La Grange, Ga.
Continuation of Ser. No. 283,031, Jul. 29, 1994, Pat. No. 5,470,630, which is a division of Ser. No. 191,802, Feb. 3, 1994, Pat. No. 5,366,779, which is a continuation-in-part of Ser. No. 930,608, Sep. 29, 1992, abandoned. This application Nov. 14, 1995, Ser. No. 557,283
Claims priority, application United Kingdom, Apr. 10, 1990, 9008166
Int. Cl.^{6} B32B *5/02;11/10;* **C08L** *95/00*
U.S. Cl. 428—95 **16 Claims**

1. A multiphase modified bitumen composition, which composition comprises:
a) a straight run bitumen;

b) a polymer mixture, the polymer mixture consisting essentially of a major amount of a low density polyethylene polymer (LDPE) and a minor amount of a high density polyethylene polymer (HDPE);
c) the straight run bitumen forming a dispersed phase in a continuous phase of the polymer mixture; and
d) the polymer mixture employed in an amount of up to about 12 percent by weight of the bitumen composition.

5,702,797
MOLDED SURFACE FASTENER AND METHOD FOR MANUFACTURING THE SAME
Keisuke Sakakibara; Ryuichi Murasaki; Shinichi Daijyogo, and Tsuyoshi Minato, all of Toyama-ken, Japan, assignors to YKK Corporation, Tokyo, Japan
Filed May 31, 1996, Ser. No. 656,046
Claims priority, application Japan, Jun. 2, 1995, 7-136682
Int. Cl.^{6} B32B *3/06*
U.S. Cl. 428—100 **6 Claims**

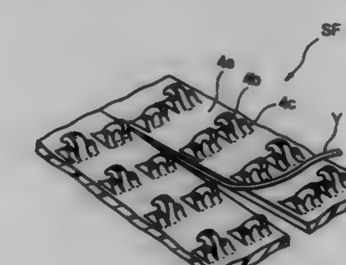

1. A molded surface fastener comprising:
a molded synthetic resin substrate sheet having a first width dimension and having a plurality of male engaging elements projecting from a surface thereof and unitarily molded with said substrate; and
at least one individual elongate yarn embedded in said substrate sheet extending generally perpendicularly with respect to said width dimension and defining a line of weakness in said substrate sheet such that the substrate sheet may be torn by hand along the line of weakness defined by a said individual yarn to provide a separated molded surface fastener portion having a second width dimension smaller than said first width dimension.

5,702,798
COMPOSITE MATERIAL WITH CONTROLLED ELASTICITY
Yukio Sugita, Yokohama; Kintaro Aihara, Chiba; Sadayuki Ishiyama, Setagaya-ku, and Jun Yamada, Yokohama, all of Japan, assignors to Nippon Petrochemicals Company, Limited, Tokyo, Japan
Filed Jun. 19, 1995, Ser. No. 491,639
Claims priority, application Japan, Jun. 20, 1994, 6-160691; Jun. 20, 1994, 6-160692; Dec. 20, 1994, 6-334868
Int. Cl.^{6} B32B *3/10*
U.S. Cl. 428—131 **15 Claims**

1. A controlled elastic composite material comprising a flexible elastomeric layer and a first oriented layer, said first oriented layer formed of a thermoplastic resin selected from the group consisting of (a) a longitudinally monoaxially oriented reticular film; (b) a transversely monoaxially oriented reticular film; and (c) a plurality of monoaxially stretched or rolled tapes disposed in parallel.

5,702,799
SLIP RESISTANT TEXTURE FOR WET SKIN CONTACT SURFACES
David Brown, Milliken; Paul von der Lippe, and Susan von der Lippe, both of Loveland, all of Colo., assignors to Colorado Time Systems Inc., Loveland, Colo.
Filed Jan. 17, 1995, Ser. No. 374,479
Int. Cl.^{6} B32B *9/00*
U.S. Cl. 428—143 **21 Claims**

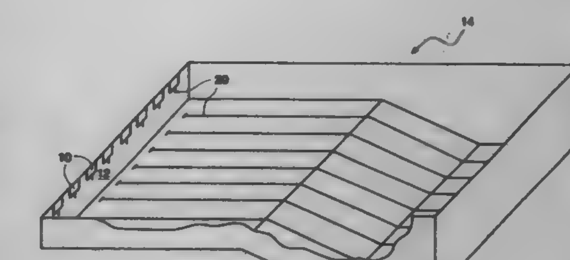

1. A slip-resistant swimming pool touchpad apparatus for use in a swimming pool containing water defining a water line in said swimming pool, said apparatus comprising:
pad means, disposed in a substantially vertical orientation at an end of a swiping pool and extending across at least a potion of a swiping lane of said swiping pool, for use in sensing a touch by a swimmer, said pad means including a front surface facing inwardly towards an inside of said swimming pool, wherein at least a first portion of said front surface of said pad means is positionable underwater below said water line of said swimming pool,;
timing means, operatively associated with said pad means, for providing time-related information relative to a sensed touch of said pad means by the swimmer; and
texture means, disposed on said front surface of said pad means and extending at least across a first area of said first portion of said front surface positionable underwater below said water line, for providing an enhanced underwater frictional characteristic to said pad means, said first area having a width of at least about 0.5 meters and extending across a vertical center axis of said pad means, and said tenure means including backing layer and particles affixed thereto defining distributed surface projections having a dimension of less than about 100 microns, wherein said tenure means facilitates underwater pushing off from said pad means by the swimmer.

5,702,800
ABRASIVE TAPE FOR MAGNETIC INFORMATION READING APPARATUS FOR PHOTOGRAPHIC USE, ABRASIVE TAPE PACKAGE, AND A METHOD FOR CLEANING THE APPARATUS
Keiji Mihayashi, and Katsumi Ryoke, both of Kanagawa, Japan, assignors to Fuji Photo Film Co., Ltd., Kanagawa, Japan
Filed Mar. 19, 1996, Ser. No. 618,351
Claims priority, application Japan, Mar. 30, 1995, 7-100103
Int. Cl.^{6} B24D *3/00;* **B24B** *1/00*
U.S. Cl. 428—144 **11 Claims**

1. An abrasive tape for a magnetic information reading apparatus for photographic use comprising:
a support tape having a thickness between 60 μm and 180 μm;
an abrasive layer comprising an abrasive and a binder provided on one side of the support tape;
a hydrophilic colloid layer provided on another side of the support opposite the one side upon which the abrasive layer is provided.

5,702,801
METHOD FOR PRODUCING A VARIABLE DENSITY, CORRUGATED RESIN-BONDED OR THERMO-BONDED FIBERFILL AND THE STRUCTURE PRODUCED THEREBY
Jung-Fu Chien, Montebello, Calif., assignor to Shinih Enterprise Co., Ltd., Taipei, Taiwan
Continuation-in-part of Ser. No. 293,239, Aug. 19, 1994, Pat. No. 5,558,924, which is a continuation-in-part of Ser. No. 246,953, May 20, 1994, abandoned, which is a continuation-in-part of Ser. No. 246,880, May 20, 1994, abandoned, which is a continuation-in-part of Ser. No. 841,806, Feb. 26, 1992, abandoned. This application Oct. 25, 1995, Ser. No. 548,259
Int. Cl.^{6} B32B *3/28*
U.S. Cl. 428—181 **22 Claims**

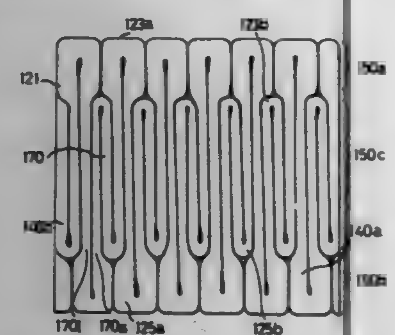

1. A corrugated fiberfill structure comprising a single fibrous web folded to form a plurality of pleats having alternating crests and bases, each of the pleats having a pair of legs, each of the legs having a first leg surface and a second leg surface, the first leg surface of a first leg being in intimate contact with the first leg surface of an adjoining leg of the pleat and the second leg surface of the first leg being in intimate contact with the second leg surface of an adjoining leg of an adjacent pleat over a portion of each leg, at least some crests defining a first structural surface and at least some bases defining a second structural surface, a line transverse to and between the first and second structural surfaces defining a thickness direction of the structure, the pleats of the structure being arranged so that the structure has a density that varies in the thickness direction between the first and second structural surfaces wherein the legs of adjoining pleats are unequal in length.

5,702,802
PERMANENT XEROGRAPHIC TONER RECEPTIVE INDEX DIVIDER
James Palmer Rettker, Glenwood; William Edward Peterson, Elgin; Philip Bonn Chandler, Tinley Park, and John Howard Lee, Palatine, all of Ill., assignors to Avery Dennison Corporation, Pasadena, Calif.
PCT No. PCT/US93/11804, § 371 Date Jul. 26, 1995, § 102(e) Date Jul. 26, 1995, PCT Pub. No. WO94/13493, PCT Pub. Date Jun. 23, 1994
Continuation-in-part of Ser. No. 989,091, Dec. 11, 1992, Pat. No. 5,407,234. This PCT application Dec. 6, 1993, Ser. No. 446,686
Int. Cl.^{6} B32B *23/02*
U.S. Cl. 428—192 **1 Claim**

1. A permanent xerographic toner-receptive index sheet assembly, comprising:
an index sheet;
a reinforced index tab extending from said sheet, said index tab being formed of plastic film having a thickness of from about 0.5 mils to about 5 mils and adhesively bonded to said index sheet;
said index tab having a polymer coating directly applied thereto, said coating having a glass transition temperature at which the polymer becomes less hard and brittle below the effective xerographic copier toner fusing temperature, but retaining its integrity at temperatures at least as high as 200° F.;

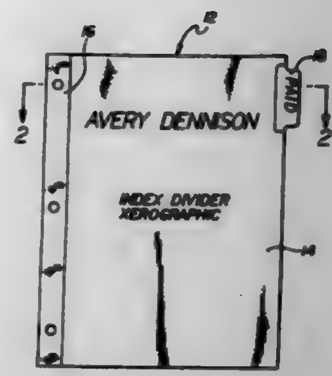

said reinforced index tab with polymer coating applied thereto being of substantially the same thickness as said index sheet, whereby the coating forms a bond with xerographic toner applied thereto; and
said coating with toner bonded thereto having high abrasion resistance capable of withstanding 50 double passes of an ASTM Gardner Scrape Adhesion Tester with a 250 gram weight applied thereto, without significantly impairing the toner bound to the reinforced index tab.

5,702,803
ELECTROSTATIC COLOR IMAGING PAPER WITH AN INTRINSIC RELEASE DIELECTRIC LAYER
John F. Eisele, Lakeland; Valdis Mikelsons, Mendota Heights; Gaye K. Lehman, St. Paul; Paul J. Wang, and Patricia J. A. Brandt, both of Woodbury, all of Minn., assignors to Minnesota Mining and Manufacturing Company, St. Paul, Minn.
Filed Jul. 16, 1992, Ser. No. 914,807
Int. Cl.^{6} B32B *9/00*
U.S. Cl. 428—195 **3 Claims**

1. An electrographic imaging sheet for use with liquid toner developers, said sheet comprising:
a conductive substrate selected from the group consisting of metallized polymer, metal-filled polymer, conductive particle-filled polymer and conductive polymer and, on at least one surface of said substrate,
a layer of dielectric material between 3 and 40 micrometers in thickness, said dielectric material comprising at least one polymer comprising a silicone,
said layer of dielectric having an exposed surface exhibiting dried liquid toner developer release properties characterized by a surface energy value between 14 and 20 dynes/cm^2, said surface energy having no more than 5% of the energy contributed by a polar component of the energy,
said liquid toner developer comprising a hydrocarbon carrier liquid, and said dielectric material being substantially insoluble in said hydrocarbon carrier liquid used in liquid toner developers,
wherein there is no second dielectric layer between said dielectric layer and said substrate.

5,702,804
RECORDING SHEETS
Shadi L. Malhotra, Mississauga, Canada, assignor to Xerox Corporation, Stamford, Conn.
Filed Mar. 7, 1996, Ser. No. 612,472
Int. Cl.^{6} B41M *5/00*
U.S. Cl. 428—195 **21 Claims**

19. A process which comprises applying an aqueous recording liquid in an imagewise pattern to a recording sheet which comprises a substrate and an image receiving coating situated on at least one surface of the substrate, said coating containing an additive selected from the group consisting of macrocycles, por-

phines, and mixtures thereof, said image receiving coating being suitable for receiving images of an aqueous ink.

5,702,805
PHOTOPOLYMER HOLOGRAPHIC DECAL FOR PLASTIC SUBSTRATE
Khin Swe Yin, Alhambra; Kevin Yu, Temple City, and John E. Gunther, Torrance, all of Calif., assignors to Hughes Electronics, Los Angeles, Calif.
Filed Aug. 28, 1996, Ser. No. 704,169
Int. Cl.^{6} B32B *3/00*
U.S. Cl. 428—195 **4 Claims**

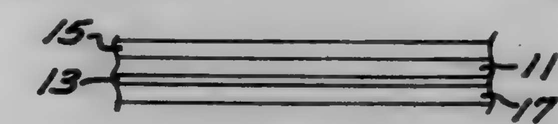

1. A hologram decal comprising:
a photopolymer hologram layer having hologram fringes recorded therein, said photopolymer hologram having first and second surfaces;
a transparent pressure sensitive adhesive layer disposed on the first surface of said photopolymer hologram layer; and
a transparent hardcoat disposed on the second surface of said photopolymer hologram layer.

5,702,806
DECORATIVE LAMINATE SURFACE LAYER
Robin D. O'Dell, 1372 Water Oak Point, and Joseph Lex, 8304 Laioo Ct., both of Pasadena, Md. 21122
Division of Ser. No. 451,978, May 26, 1995, which is a continuation-in-part of Ser. No. 731,981, Jul. 18, 1991, Pat. No. 5,266,384. This application Apr. 25, 1996, Ser. No. 599,705
Int. Cl.^{6} B32B *3/00;5/16;7/00*
U.S. Cl. 428—206 **19 Claims**

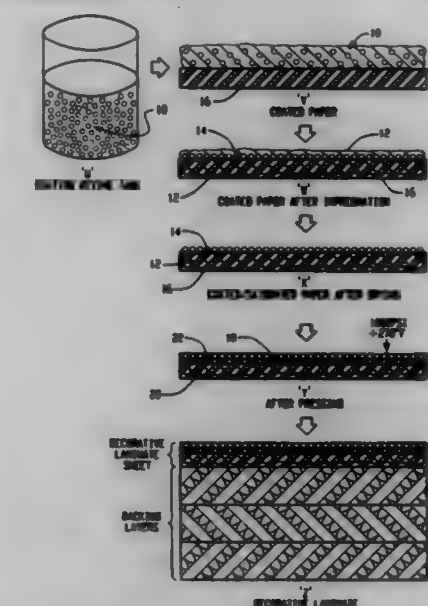

1. A decorative laminate comprising:
a core backing layer serving as a supporting layer;
a decorative facing sheet having a first exterior surface laminated to said backing layer and an opposing exterior surface; and
a coating including at least two dissimilar resins applied on the opposing exterior surface of said decorative facing sheet prior to laminating said facing sheet to said backing layer, one of said resins being a liquid impregnating resin and another of said resins being a particulate surface coating resin that melts and flows under heat and pressure during lamination to form a laminate surface having an ultra-thin surface layer consisting essentially of the surface coating resin and having one or more of the following properties, enhanced wearability, chemical, thermal, ultraviolet radiation resistance or abrasion resistance.

5,702,807
CERAMIC CIRCUIT BOARD AND MANUFACTURING METHOD THEREOF
Michio Horiuchi, and Yoichi Harayama, both of Nagano, Japan, assignors to Shiko Electric Industries Co., Ltd., Nagano, Japan
Continuation of Ser. No. 399,348, Mar. 3, 1995, abandoned. This application Oct. 21, 1996, Ser. No. 734,315
Claims priority, application Japan, Mar. 3, 1994, 6-033652
Int. Cl.^{6} B32B *3/00;* **H05K** *1/03*
U.S. Cl. 428—210 **5 Claims**

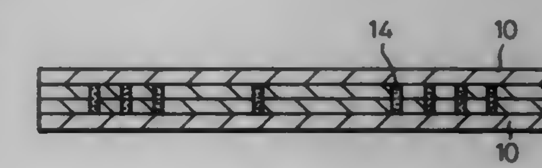

1. A fired ceramic circuit board structure comprising:
an insulating ceramic substrate; and
an aluminum wiring surrounded by said substrate,
said ceramic circuit board structure being characterized by having been fired at a temperature not lower than 660° C. with said wiring surrounded by a ceramic greensheet precursor of said insulating ceramic substrate.

5,702,808
Al_2O_3-COATED CUTTING TOOL PREFERABLY FOR NEAR NET SHAPE MACHINING
Björn Ljungberg, Enskede, Sweden, assignor to Sandvik AB, Sandviken, Sweden
Filed Nov. 14, 1995, Ser. No. 557,580
Claims priority, application Sweden, Nov. 15, 1994, 9403932
Int. Cl.^{6} B23P *15/28*
U.S. Cl. 428—216 **10 Claims**

1. A body with a <20 μm thick coating including an outermost layer or second outermost layer of α-Al_2O_3 with a thickness of 2.5–12 μm wherein said Al_2O_3 layer as coated and in the absence of post coating treatments, has a smooth, shiny appearance like it has been polished.

5,702,809

COMPOSITION FOR AN ANTISTATIC LAYER AND A FILM COMPRISING THIS LAYER

Jean-Pierre Tixier, Chalon-Sur-Saone, and Annie Francoise Armande Legrand, Dracy Le Fort, both of France, assignors to Eastman Kodak Company, Rochester, N.Y.

Filed Jun. 10, 1996, Ser. No. 661,235

Claims priority, application France, Jun. 12, 1995, 95 07167; Dec. 5, 1995, 95 14516

Int. Cl.⁶ B05D *1/36;* **B32B** *7/62;27/40;* **C08K** *3/10*

U.S. Cl. 428—216 **20 Claims**

1. Aqueous composition for an antistatic layer comprising vanadium pentoxide and an aqueous dispersion of a polyurethane characterized in that the polyurethane includes no sulfonated groups and is resistant to flocculation in an acidic medium.

12. Method for obtaining a light-transmitting transparent antistatic abrasion-resistant film comprising

1) applying a subbing layer on a light-transmitting polymeric support,

2) coating the subbing layer obtained in 1) with the aqueous composition according to claim 1, and

3) drying the coated aqueous composition.

13. Antistatic film comprising a polymeric support, a subbing layer, and an antistatic layer, wherein the antistatic layer is formed by coating the aqueous composition according to claim 1 on the subbing layer and drying the coated aqueous composition.

5,702,810

CUSHIONING COMPOSITE MOLDED ARTICLE AND A PROCESS FOR PRODUCTION THEREOF

Toshinori Koseki, Kamakura; Kunio Maeda, Tokyo, and Syoichi Kanno, Machida, all of Japan, assignors to Mitsubishi Chemical Corporation, Tokyo, Japan

Continuation of Ser. No. 150,146, Nov. 10, 1993, abandoned. This application Jul. 27, 1995, Ser. No. 508,243

Claims priority, application Japan, Mar. 10, 1992, 4-086092

Int. Cl.⁶ B29C *44/06;44/12;* **B32B** *5/20*

U.S. Cl. 428—318.8 **16 Claims**

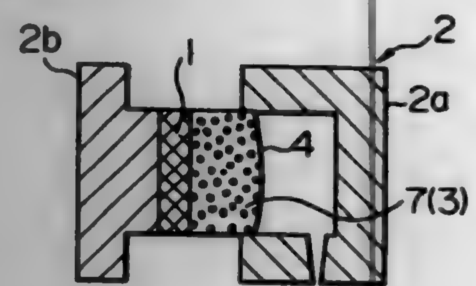

1. A process for producing a cushioning composite molded article comprising the steps of:

providing a rigid substrate in a mold having a space larger than said substrate, said substrate having been provided by one of the steps of

placing a rigid substrate previously molded in a desired shape in a mold having a space larger than the rigid substrate, and

injecting a resin into a mold having a desired shape and then enlarging the inside of the mold so that it has a space larger than said mold;

injecting an expandable elastomer of a saturated-type styrene-based elastomer having an average molecular weight greater than 30,000 but not more than 70,000 as measured by a GPC method, and an A-hardness according to JIS K6301 of greater than 50 but not more than 100 into the space to form integrally on the rigid substrate an expanded layer of elastomer and a skin layer of the same elastomer over the expanded layer, said skin layer having been formed by cooling a portion of the expandable elastomer against the mold, said expandable elastomer filling said space; and then

enlarging the inside of the mold further to expand said layer of the expandable elastomer to form a cushioning material coated with said surface material.

2. A cushioning composite molded article produced by a process set forth in claim 1.

5,702,811

HIGH PERFORMANCE ABRASIVE ARTICLES CONTAINING ABRASIVE GRAINS AND NONABRASIVE COMPOSITE GRAINS

Kwok-Lun Ho, and Walter L. Harmer, both of P.O. Box 33427, St. Paul, Minn. 55133-3427

Filed Oct. 20, 1995, Ser. No. 545,874

Int. Cl.⁶ B32B *5/16;* **B24B** *1/00;* **C09K** *3/14*

U.S. Cl. 428—323 **14 Claims**

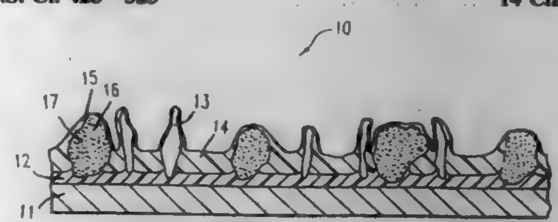

1. A coated abrasive article, comprising a backing having a layer of grains adherently bonded thereto by a binding material, wherein said layer of grains comprises abrasive grains and nonabrasive composite grains, and said nonabrasive composite grains comprise inorganic nonabrasive particles bonded together by a binder selected from the group consisting of a metal salt of a fatty acid, colloidal silica, and combinations thereof; wherein an average particle size of said abrasive grains is a value x in micrometers, an average particle size of said nonabrasive composite grains is a value y in micrometers, and a numerical value of ratio y/x ranges from about 0.5 to about 2.

5,702,812

COMPLIANT DOCTOR BLADE

Peter W. Bracken; Jeffery R. Brener; Martin V. DiGirolamo; Sam E. Mullinix, Jr.; Donald W. Stafford, and Peter E. Wallin, all of Lexington, Ky., assignors to Lexmark International, Inc., Lexington, Ky.

Filed Mar. 28, 1996, Ser. No. 623,363

Int. Cl.⁶ B32B *5/02*

U.S. Cl. 428—323 **20 Claims**

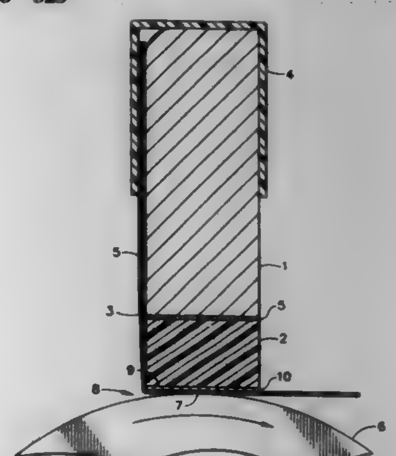

1. An electrically energized doctor blade for metering charged electrophotographic toner held on a developer roller by physically contacting a sector of said roller with a surface of said blade which is electrically charged, said blade comprising a compliant backing member, a supporting member to position said blade adjacent to said roller, a compliant foam layer attached to the side of said supporting member facing the developer roller, a shim having a stiffness of from about 0.5 to about 31.0 inches of deflection/inch of length/pounds of force attached to the side of the compliant foam layer facing the developer roller, and a layer on said compliant backing member comprising conducting means and a solid binder having dispersed throughout said binder grit particles, said compliant backing member, said conducting means and said layer with grit being attached to said supporting member and being bendable to extend under said foam layer and shim to contact said layer with grit and said conducting means with said sector of said developer roller during use.

5,702,813

COMPOSITE MOLDED ARTICLE INCLUDING A POLARIZER OF POLYCARBONATE

Oritoshi Murata, and Masahiko Okamoto, both of Higashi-Osaka, Japan, assignors to Yamamoto Kogaku Co., Ltd., Higashi-Osaki, Japan

Filed Aug. 10, 1995, Ser. No. 513,559

Claims priority, application Japan, Aug. 12, 1994, 6-190671

Int. Cl.⁶ B32B *5/16;27/36*

U.S. Cl. 428—332 **6 Claims**

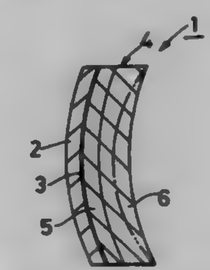

1. A composite molded article, comprising a protective layer formed of an annealed or stretched polycarbonate material, a second layer formed of a polycarbonate material which is neither annealed nor stretched, and a polarizing film interposed between the protective layer and the second layer,

the second layer being greater in thickness than the protective layer so that the polarizing film is positioned closer to the protective layer side than the center of the thickness of the composite molded article.

5,702,814

GOLD WIRE FOR BONDING

Shinichi Hanada, and Koichiro Mukoyama, both of Tokyo, Japan, assignors to Tanaka Denshi Kogyo Kabushiki Kaisha, Tokyo, Japan

Filed Jan. 17, 1996, Ser. No. 587,747

Claims priority, application Japan, May 17, 1995, 7-118521; Dec. 7, 1995, 7-319059

Int. Cl.⁶ C22C *5/02*

U.S. Cl. 428—364 **[illegible] Claims**

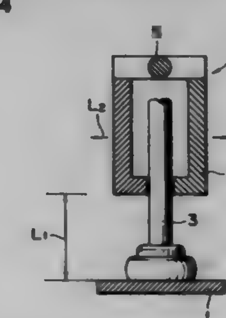

1. A fine gold alloy wire for use in the bonding of an IC chip, consisting essentially of from 0.0001 to 0.005% by weight of Pt; from 0.0001 to 0.005% by weight of Ag; from 0.0005 to 0.005% by weight of Mg; and from 0.00005 to 0.005% by weight of Eu; with the balance being Au, said Au having less than 0.001% by weight of incidental impurity.

5,702,815

THERMAL BONDABLE FIBER

Eric J. Evain, New Castle, Del., assignor to Montell North America Inc., Wilmington, Del.

Continuation of Ser. No. 469,245, Jun. 6, 1995, abandoned, which is a division of Ser. No. 331,319, Oct. 28, 1994, Pat. No. 5,507,997, which is a continuation-in-part of Ser. No. 221,305, Mar. 31, 1994, abandoned. This application Mar. 4, 1997, Ser. No. 811,307

Int. Cl.⁶ D02G *3/00*

U.S. Cl. 428—364 **3 Claims**

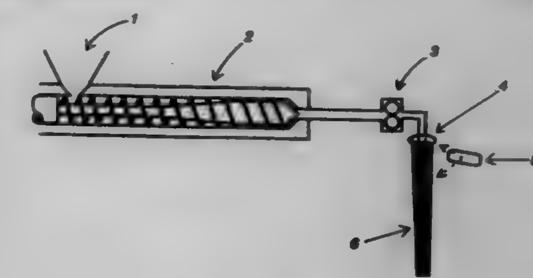

1. A thermally bondable fiber prepared according to a process which comprises extruding fluid molten polymer downwardly through a spinneret having a spinneret face containing at least one orifice through which a fluid molten polymer filament emerges, exposing the fluid molten polymer filament(s) emerging downwardly from the spinneret face to an electromagnetic energy of from $1\times10^{31\ 4}$ to 100 W/cm^2, and solidifying said fluid molten polymer filament(s), said thermally bondable fiber having a denier of from 1 to 50 denier per filament and a greater bond strength than a fiber prepared in the same manner but without being exposed to said electromagnetic energy upon emerging downwardly from said spinneret face, wherein bond strength is the amount of force required to separate bonded segments of at least two of said fibers from one another after they have been bonded together by application of heat and pressure.

5,702,816

REINFORCING STRUCTURAL REBAR AND METHOD OF MAKING THE SAME

Mark A. Kaiser, Elida, Ohio, assignor to Marshall Industries Composites, Inc., Lima, Ohio

Continuation-in-part of Ser. No. 267,772, Jun. 28, 1994. This application Sep. 14, 1995, Ser. No. 527,976

Int. Cl.⁶ D02G *3/00*

U.S. Cl. 428—375 **18 Claims**

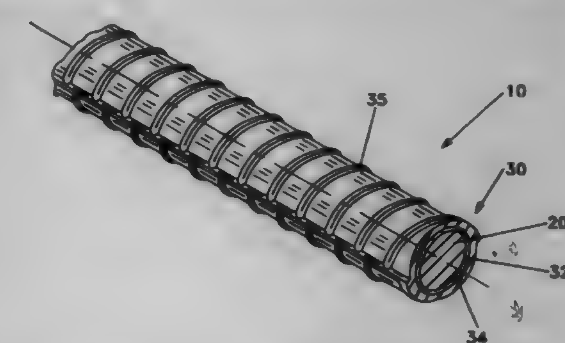

1. A reinforcing structural rebar comprising:

an inner core formed by pultruding reinforcing material through a bath or injection system of a first resin material, the inner

core containing at least 40 percent by weight reinforcing fibers of the first reinforcing material; and
an outer cladding comprising:
an inner cladding layer comprising a second resin material reinforced with unidirectional reinforcing fibers of a second reinforcing material, the fibers of said second reinforcing material being oriented substantially parallel to the fibers of said first reinforcing material; and
an outer cladding layer comprising a corrosion-resistant third resin material reinforced with a non-unidirectional third reinforcing material.

5,702,817

Patent Not Issued For This Number

5,702,818
BIOCOMPATABILITY OF SOLID SURFACES

Patrick T. Cahalan, Scheperagats; Michel Verhoeven, Maastricht; Marc Hendriks, Brunssum, and Linda Cahalan, Scheperagats, all of Netherlands, assignors to Medtronic, Inc., Minneapolis, Minn.
Division of Ser. No. 193,964, Feb. 9, 1994, Pat. No. 5,415,938, which is a division of Ser. No. 6,218, Jan. 19, 1993, Pat. No. 5,308,641. This application Apr. 27, 1995, Ser. No. 430,001
Int. Cl.^{6} A61F *2/01*
U.S. Cl. 428—409 **9 Claims**

1. A medical device having a biocompatible surface comprising:
(a) a solid surface;
(b) a first layer comprising a graft polymer of acrylamide covalently attached to the solid surface, said graft polymer including carboxylic acid groups pendant to acrylamide moieties of the graft polymer;
(c) a second layer comprising a crosslinked polyalkylimine covalently bonded to the first layer by attachment to the pendant carboxylic acid groups of the first layer; and
(d) a biomolecule covalently bonded to the second layer.

5,702,819
COMPOSITE LENSES

Amitava Gupta; Ronald D. Blum; Venkatramani S. Iyer, and Paul J. Nagg, all of Roanoke, Va., assignors to Innotech, Inc., Roanoke, Va.
Continuation of Ser. No. 545,065, Oct. 19, 1995, which is a division of Ser. No. 214,506, Mar. 18, 1994, Pat. No. 5,512,371. This application May 17, 1996, Ser. No. 649,354
Int. Cl.^{6} B32B *27/36*
U.S. Cl. 428—412 **29 Claims**

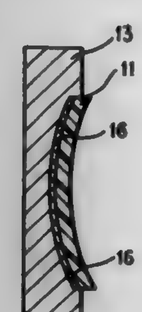

1. A composite plastic optical quality lens, comprising:
a plastic lens preform portion of optical quality material; and
a cured plastic attached portion of a resin composition that is bonded to said plastic lens preform portion, said cured plastic attached portion having higher scratch resistance than said plastic lens preform portion, and said resin composition having a refractive index within about 0.05 units of the refractive index of said plastic lens preform portion.

5,702,820
PHOTO-IMAGING RESIST INK AND CURED PRODUCT THEREOF

Minoru Yokoshima, Toride; Tetsuo Ohkubo, Ube; Kazunori Sasahara, Shimonoseki; Yoneji Sato, Hachioji, and Yoko Baba, Akigawa, all of Japan, assignors to Nippon Kayaku Kabushiki Kaisha, Tokyo, and Nippon Polytech Corp., Hachioji, both of Japan
Division of Ser. No. 374,153, Jan. 17, 1995, abandoned. This application Jun. 10, 1996, Ser. No. 660,839
Claims priority, application Japan, Jan. 17, 1994, 6-003248
Int. Cl.^{6} C08F *283/00;* **C08G** *59/16;* **B32B** *27/38*
U.S. Cl. 428—413 **10 Claims**

1. A photo-imaging resist ink containing (A) an unsaturated group-containing polycarboxylic acid resin which is a reaction product of (c) succinic anhydride with an additive reaction product of (a) an epoxy resin with (b) an unsaturated group-containing monocarboxylic acid, wherein (a) said epoxy resin is represented by the following formula (1):

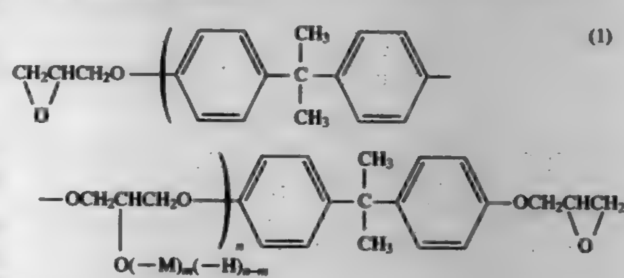

(1)

wherein M stands for

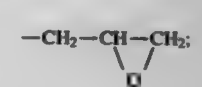

n is at least 1 on the average; and m is 1 to n on the average, wherein (A) said unsaturated group containing polycarboxylic acid resin is prepared by reacting (a) said epoxy resin with 0.8 to 1.3 mol, per equivalent of the epoxy groups of said epoxy resin, of (b) said unsaturated group containing monocarboxylic acid to form the said additive reaction product, and subsequently reacting said additive reaction product with 0.1 to 0.9 equivalent, per equivalent of the hydroxyl groups of said additive reaction product, of © succinic anhydride.

5,702,821
MAGNETIC RECORDING MEDIUM COMPRISING FERROMAGNETIC POWDER AND A SPECIFIED POLYURETHANE RESIN

Yuichiro Murayama; Masaki Satake; Hiroshi Hashimoto, and Tsutomu Okita, all of Odawara, Japan, assignors to Fuji Photo Film Co., Ltd., Kanagawa, Japan
Filed Nov. 9, 1995, Ser. No. 555,447
Claims priority, application Japan, Feb. 24, 1995, 7-037009; Aug. 30, 1995, 7-222040
Int. Cl.^{6} G11B *5/702*
U.S. Cl. 428—425.9 **3 Claims**

1. A magnetic recording medium comprising a magnetic layer formed on a non-magnetic support member, said magnetic layer comprising ferromagnetic powder and a binder comprising a polyurethane resin which is a reaction product of diol and organic diisocyanate, wherein said diol comprises short chain diol and long chain diol, said short-chain diol has a cyclic structure and said short chain diol forms 17 to 40 weight % of said polyurethane resin, said long-chain diol contains 1.0 to 5.0 mmol/g of an ether group and said long-chain diol forms 10 to 50 weight % of said polyurethane resin, and the thickness of said magnetic layer is 1 μm or less, wherein said short-chain diol has a molecular weight less than 500, and said long-chain diol has a molecular weight of 500 to 5,000.

5,702,822
METHOD FOR PRODUCING SINGLE CRYSTAL, AND NEEDLE-LIKE SINGLE CRYSTAL

Yoshinori Terui, and Ryuichi Terasaki, both of Machida, Japan, assignors to Denki Kagaku Kogyo Kabushiki Kaisha, Tokyo, Japan
Continuation of Ser. No. 63,721, May 20, 1993, abandoned. This application Apr. 19, 1995, Ser. No. 424,109
Claims priority, application Japan, May 22, 1992, 4-154118
Int. Cl.^{6} B32B *9/04*
U.S. Cl. 428—446 **13 Claims**

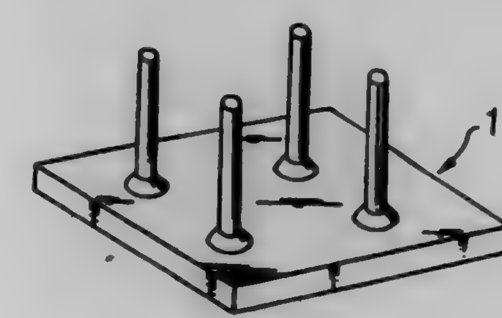

1. A substrate having at least one single crystal pin thereon, said substrate having a surface comprising:
(1) a single crystal material or layer, said single crystal material or layer having been etched to a depth of from 1 to 100 microns around a desired metal pattern formed on the surface of said single crystal material or layer prior to etching and prior to forming a single crystal pin thereon,
said single crystal material or layer having a thickness of at least 3 microns, said material or layer having a first surface on which said desired metal pattern was formed and a second surface lower than said first surface, said second surface being formed by etching said single crystal material or layer around said desired metal pattern to the depth of said second surface;
(2) at least one etched tapered single crystal base portion extending from said first surface of said single crystal material or layer to said second surface, said tapered single crystal base portion being located at a position beneath said metal of said desired pattern, and having been formed by etching said single crystal material or layer at portions not protected by said metal; said tapered single crystal base portion having (i) a proximal end located at said second surface and (ii) a distal end located at said first surface, the diameter of the proximal end at said second surface being larger than the diameter (d) of said distal end at said first surface, such that said base portion is tapered in shape with its smaller diameter being at the first surface of said single crystal material or layer; and
(3) a vertical single crystal pin which is in contact with and has been grown on and at the distal end of said tapered single crystal base portion at locations of said single crystal material or layer where said desired metal pattern was formed, said vertical pin having an end distal from the distal end of said tapered single crystal base portion, the axis of said vertical single crystal pin being perpendicular to said single crystal layer or forming an angle θ with a line perpendicular to said single crystal material or layer, said angle θ being not more than 20°.

5,702,823
BIOCOMPATIBLE COATED ARTICLE

Lloyd Forrestal, Boulder; Marc Voorhees, Arvada; Yung-Ming Chen, Westminster, and Richard A. Edrich, Denver, all of Colo., assignors to COBE Laboratories, Inc., Lakewood, Colo.
Continuation of Ser. No. 473,723, Jun. 7, 1995, Pat. No. 5,643,681, which is a continuation-in-part of Ser. No. 227,955, Apr. 15, 1994, abandoned. This application Oct. 10, 1996, Ser. No. 728,823
Int. Cl.^{6} B32B *15/08*
U.S. Cl. 458—450 **24 Claims**

1. A metallic article having a base metal and a biocompatible coating thereon comprising a polylactone-polysiloxane-polylactone triblock copolymer, said coating having a relative surface concentration sufficient to provide an X-ray fluorescence intensity ratio in the range 0.02 to 0.35.

5,702,824
DIELECTRICS FOR TRANSFER SHEET CARRYING MEMBER

Satoru Matsunaga, Ishioka; Masayuki Hino, Niihari-gun, and Yosikiti Teramoto, Inashiki-gun, all of Japan, assignors to Kureha Kagaku Kogyo Kabushiki Kaisha, Tokyo, Japan
Filed Apr. 5, 1995, Ser. No. 440,310
Claims priority, application Japan, Apr. 7, 1994, 6-093676
Int. Cl.^{6} B32B *27/00*
U.S. Cl. 428—500 **8 Claims**

1. A transfer sheet carrying member of an electrophotographic image forming apparatus, comprising 80 to 96 mass % of a vinylidene fluoride based resin having an inherent viscosity of 0.8 to 1.4 dl/g as measured in a concentration of 0.4 g/dl at 30° C. with dimethylformaldehyde as solvent and 4 to 20 mass % of a methyl methacrylate-based resin having a melt viscosity of 90 to 6,000 Pa's as measured at 250° C. at a shear rate of 50 sec^{-1}.

5,702,825
LOW YELLOW INDEX POLYMER COMPOSITIONS, POLYMERIZABLE COMPOSITIONS AND LENSES USING SAID COMPOSITIONS

Gabriel Keita, Courbevoie; Joel Renaudineau, Creteil, both of France, and Leanirith Yean, Largo, Fla., assignors to Essilor International (Compagnie Generale d'Optique), Charenton Cedex, France
Continuation-in-part of Ser. No. 374,378, Jan. 8, 1995, Pat. No. 5,545,828, which is a continuation-in-part of Ser. No. 172,137, Dec. 21, 1993, Pat. No. 5,442,022. This application Aug. 12, 1996, Ser. No. 695,790
Claims priority, application France, Dec. 22, 1992, 92 15533
Int. Cl.^{6} B32B *27/20;* **C08F** *232/04;* **C02B** *1/04*
U.S. Cl. 428—500 **32 Claims**

1. A polymer composition obtained by polymerisation of a composition comprising:
a component A comprising:
•at least 50% by weight of a monomer or mixture of monomers having formula I:

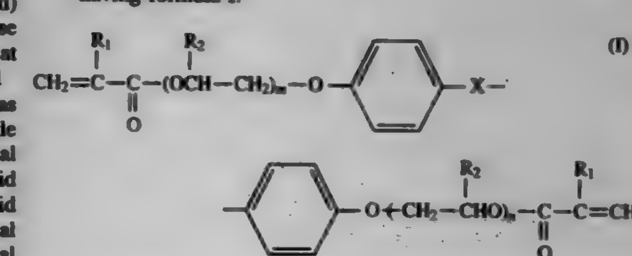

(I)

wherein R_1 and R_2, which may be identical or different, represent hydrogen of C_1–C_6 alkyl, X represents:

$$O, S, SO_2, -CO, -CH_2-, -CH=CH- \text{ or } -\overset{\displaystyle CH_3}{\underset{\displaystyle CH_3}{\overset{|}{\underset{|}{C}}}}-$$

m and n are integers
and m+n is between 0 and 10;
0 to 50% by weight of one or more mono- or polyfunctional vinyl, acrylic or methacrylic comonomers (II); and
a component B comprising:
•in a proportion of 0.05 to 15% by weight with respect to the weight of components (I) and (II), at least one monomer (III) comprising an ethylenic unsaturation which does not form part of an aromatic ring and containing in position α of this unsaturation, a carbon atom carrying a free hydroxy group.

24. A photochromic substrate made of a polymer composition according to claim 1, wherein at least one photochromic compound is incorporated within the substrate.

25. The photochromic substrate of claim 24, wherein the photochromic compound is incorporated within the substrate to a depth of 100 to 150 μm from a surface of the substrate.

5,702,826
LAMINATED NONWOVEN WEBS DERIVED FROM POLYMERS OF LACTIC ACID AND PROCESS FOR PRODUCING

Philippe Ehret, Fortschwihr; Philippe Guipouy, Guebwiller, and Kimmo Lahtenkorva, Kaysersberg, all of France, assignors to Fiberweb France, Biesheim, France
Filed Oct. 12, 1995, Ser. No. 542,169
Claims priority, application France, Oct. 12, 1994, 94 12333
Int. Cl.^{6} B32B *23/08;27/00*
U.S. Cl. 428—515 **13 Claims**

1. A composite structure comprising a ply of a nonwoven and one or more plies selected from the group consisting of nonwoven and film, wherein the plies consist of thermoplastic polymers derived only from lactic acid.

5,702,827
OLEFIN THERMOPLASTIC ELASTOMER AND LAMINATE THEREOF

Yuichi Itoh; Kyoko Kobayashi; Akira Uchiyama, and Toru Takehara, all of Ichihara, Japan, assignors to Mitsui Petrochemical Industries, Ltd., Tokyo, Japan
Division of Ser. No. 268,564, Jul. 6, 1994, abandoned. This application Jun. 2, 1995, Ser. No. 459,804
Claims priority, application Japan, Jul. 8, 1993, 5-168866; Jul. 8, 1993, 5-168867; Aug. 26, 1993, 5-211851; Sep. 29, 1993, 5-242535; Apr. 27, 1994, 6-090078
Int. Cl.^{6} B32B *23/08*
U.S. Cl. 428—519 **14 Claims**

1. A thermoplastic elastomer laminate comprising:
(I) a substrate formed from an olefin thermoplastic elastomer (2) which comprises a crystalline polyolefin resin (A) and a crosslinked olefin rubber (C); and
(II) a skin layer formed from an olefin thermoplastic elastomer (3) which comprises:
a crystalline polyolefin resin (A) in an amount of 20 to 85 parts by weight, and
a block copolymer or a hydrogenated block copolymer (B) in an amount of 15 to 80 parts by weight, said block copolymers each comprising:
(a) a polymer block of a styrene selected from the group consisting of styrene, α-methylstyrene, 3-methylstyrene, 4-propylstyrene, 4-cyclohexylstyrene, 4-dodecylstyrene, 2-ethyl-4-benzylstyrene and 4-(phenylbutyl)styrene, and
(b) a polymer or copolymer block which is an isoprene polymer block or an isoprene/butadiene copolymer block and contains at least 40% of isoprene units bonding at 1,2- or 3,4-positions relative to the total isoprene units contained in the isoprene polymer block or the isoprene/butadiene copolymer block,
the total amount of said components (A) and (B) which form the skin layer (II) being 100 parts by weight.

5,702,828
PROCESS FOR WATERPROOFING GYPSUM MATERIALS

Klaus Adler; Erwin Gubisch, both of Burghausen, Germany, and Alois Sommerauer, Tarsdorf, Austria, assignors to Wacker-Chemie GmbH, Munich, Germany
Filed Feb. 22, 1996, Ser. No. 605,615
Claims priority, application Germany, Feb. 23, 1995, 195 06 398.8
Int. Cl.^{6} C14C *9/00*
U.S. Cl. 428—540 **12 Claims**

9. A process for waterproofing gypsum materials which comprises adding to said materials a mixture of:
a) one or more dispersion powders redispersible in water and based on vinyl acetate copolymers with ethylene and/or vinyl esters of C_5–C_{15}-mono-carboxylic acids, styrene copolymers with acrylic acid esters of alcohols having from 1 to 18 carbon atoms, vinyl chloride copolymers with ethylene and/or vinyl esters of C_2–C_{15} monocarboxylic acids, and
b) one or more thixotropic additives selected from the group consisting of polyacrylic acids and their salts, smectites, bentonites, carboxymethylcelluloses and melamine-formaldehyde condensates.

5,702,829
MULTILAYER MATERIAL, ANTI-EROSION AND ANTI-ABRASION COATING INCORPORATING SAID MULTILAYER MATERIAL

Serge Paidassi, Grenoble; Jacques Ernoult, St Etienne de Crossey; Michel Brun, Bizanos; Pierre Monge-Cadet, Serres-Torlaas; Yves Pauleau, Grenoble, and Guy Farges, La Ville Du Bois, all of France, assignors to Commissariat a l'Energie Atomique, Paris; Turbomeca, Cedex, and L'Etat Francais represente par le Delegue general pour l'Armement, Armees, all of France
Continuation of Ser. No. 75,519, Jul. 14, 1993, Pat. No. 5,547,767. This application Apr. 26, 1996, Ser. No. 634,899
Claims priority, application France, Oct. 14, 1991, 91 12616; Jul. 9, 1992, 92 08500
Int. Cl.^{6} B32B *15/00*
U.S. Cl. 428—610 **10 Claims**

1. A multilayer material, characterized in that it comprises a substrate covered with at least one ductile, metallic tungsten or tungsten alloy layer and at least one hard layer of a solid solution of nitrogen, in tungsten or in a tungsten alloy, the two types of layers alternating.

5,702,830
MAGNETO-OPTICAL RECORDING MATERIALS SYSTEM

Joseph Miller; Derek P. A. Pearson, both of Reading, and Philip G. Pitcher, Alton, all of United Kingdom, assignors to Johnson Matthey Public Limited Company, London, England
PCT No. PCT/GB93/01575, § 371 Date Jan. 13, 1995, § 102(e) Date Jan. 13, 1995, PCT Pub. No. WO94/02940, PCT Pub. Date Feb. 3, 1994
PCT Filed Jul. 26, 1993, Ser. No. 367,192
Claims priority, application United Kingdom, Jul. 28, 1992, 9216074
Int. Cl.^{6} G11B *5/66*
U.S. Cl. 428—611 **29 Claims**

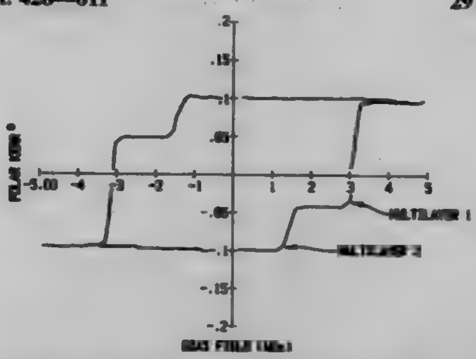

1. A magneto-optical recording medium comprising, a composite multilayer laminate system wherein multilayer films of platinum and cobalt are exchange coupled and have perpendicular magnetic anisotropy, such system having the potential to allow direct overwriting of data, said system comprising a substrate material and at least two multilayer films comprising a platinum layer and a cobalt layer, and wherein there is provided at a multilayer interface a spacer comprising one platinum layer of one or both multilayers or a separately-deposited material, one of said multilayer films having a room temperature coercivity (H_c) of 2 to 15 kOe and a low Curie temperature (T_c) of 100° C. to 400° C. and known as the memory layer and one of said multilayer films having a low room temperature coercivity of 0.5 to 10 kOe and a high Curie temperature of 175° C. to 500° C. and known as the reference layer, the difference in coercivity and Curie temperature between the two multilayer films being sufficient to permit a direct overwriting process.

5,702,831
FERROMAGNETIC GMR MATERIAL

Eugene Chen, Gilbert, and Saied N. Tehrani, Tempe, both of Ariz., assignors to Motorola, Schaumburg, Ill.
Filed Nov. 6, 1995, Ser. No. 553,933
Int. Cl.^{6} G11C *11/15*
U.S. Cl. 428—611 **15 Claims**

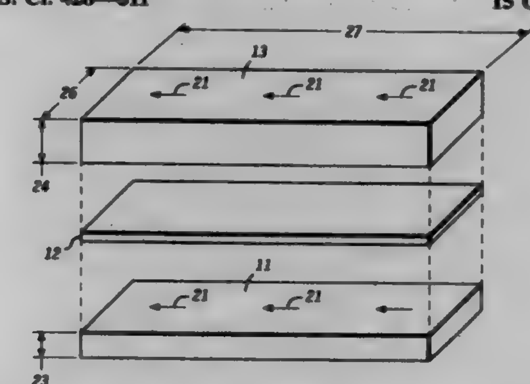

1. A ferromagnetically coupled GMR material comprising:
a plurality of magnetic layers having a width and a length wherein the width is no greater than a transition width and wherein each magnetic layer is ferromagnetically coupled to an adjacent magnetic layer and substantially all magnetic vectors in each layer of the plurality of magnetic layers substantially align along the length; and
a plurality of conductive spacers separating the plurality of magnetic layers.

5,702,832
MAGNETORESISTANCE EFFECT ELEMENT

Hitoshi Iwasaki; Yuichi Ohsawa; Reiko Kondoh, all of Yokohama; Susumu Hashimoto, Ebina; Atsuhito Sawabe, Yokosuka; Yuzo Kamiguchi, and Masashi Sahashi, both of Yokohama, all of Japan, assignors to Kabushiki Kaisha Toshiba, Kawasaki, Japan
Division of Ser. No. 144,258, Nov. 1, 1993, Pat. No. 5,549,978. This application May 23, 1996, Ser. No. 652,850
Claims priority, application Japan, Oct. 30, 1992, 4-315648; Mar. 12, 1993, 5-78919; Mar. 15, 1993, 5-53605; Mar. 15, 1993, 5-53612
Int. Cl.^{6} G11B *5/66;* **B32B** *15/01*
U.S. Cl. 428—611 **10 Claims**

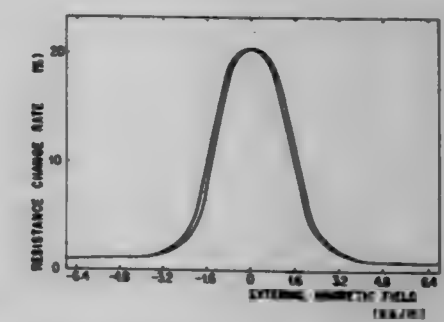

1. A magnetoresistance effect element comprising:
a substrate;
a stacked film formed on said substrate, said stacked film including a first ferromagnetic film a direction of magnetization of which is substantially pinned, a second ferromagnetic film the magnetization of which rotates with a signal magnetic field, said second ferromagnetic film having an fcc phase, and a non-magnetic film disposed between said first and second ferromagnetic films, wherein each of said first ferromagnetic film and said second ferromagnetic film, independently, contains a material selected from the group consisting of Co, a CoFe alloy, a NiFe alloy, a CoNi alloy and a CoFeNi alloy, and wherein said nonmagnetic film contains a material selected from the group consisting of Cu, Al, Pd, Pt, Rh, Ru, Ir, Au, Ag, CuPd, CuAu, and CuNi; and
a pair of leads for supplying a current to said stacked film;
wherein a (111) plane of said stacked film is oriented in a direction perpendicular to a surface of said stacked film, and a half band width of a rocking curve is about 7° or less at a (111) plane reflection peak of an X-ray diffraction curve of said stacked layer.

5,702,833
ORGANIC ELECTROLUMINESCENT ELEMENT

Kazukiyo Nagai; Chihaya Adachi; Nozomu Tamoto, and Yohta Sakon, all of Numazu, Japan, assignors to Ricoh Company, Ltd., Tokyo, Japan
Filed Aug. 14, 1995, Ser. No. 515,006
Claims priority, application Japan, Mar. 8, 1995, 7-074715
Int. Cl.^{6} H05B *33/00*
U.S. Cl. 428—690 **4 Claims**

1. An organic electroluminescent element comprising an anode, a cathode, and an organic compound layer provided between said anode and said cathode, said organic compound layer comprising

an oxadiazole compound of formula (I) in an electron-transporting effective amount:

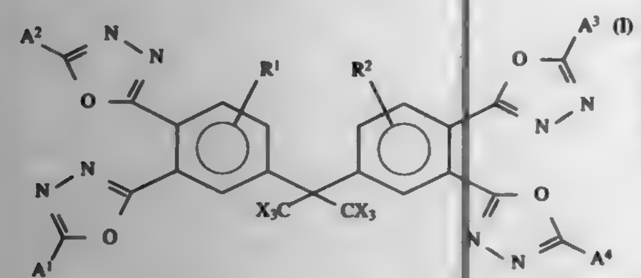

wherein A^1 to A^4 are each independently an aromatic hydrocarbon group which may have a substituent, or an aromatic heterocyclic group which may have a substituent; X is a hydrogen atom or a fluorine atom; and R^1 and R^2 are each independently a hydrogen atom, a halogen atom, or an alkyl group having 1 to 12 carbon atoms which may have a substituent, or an alkoxyl group having 1 to 12 carbon atoms which may have a substituent.

5,702,834

MAGNETO-RESISTANCE EFFECT ELEMENT

Hiroshi Sakakima, Tsuzuki-gun; Mitsuo Satomi, Katano, and Hiroshi Takeuchi, Matsubara, all of Japan, assignors to Matsushita Electric Industrial Co., Ltd., Japan

Continuation of Ser. No. 31,726, Mar. 15, 1993, Pat. No. 5,637,392. This application May 30, 1996, Ser. No. 652,681

Claims priority, application Japan, Mar. 13, 1992, 4-54934

Int. Cl.[6] G11B *5/66*

U.S. Cl. 428—692 **2 Claims**

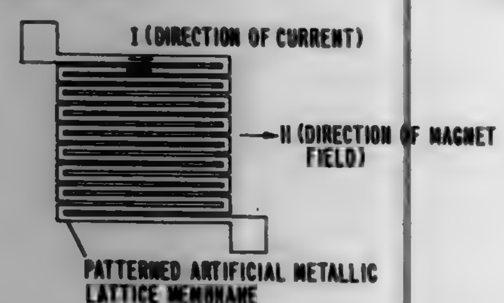

1. A magneto-resistance effect element wherein electric current passes through a magneto-resistance effect material configured in a substantially serpentine manner, wherein a demagnetization field coefficient in the direction of the current is smaller than demagnetization field coefficients in directions other than the direction of current flow and an external magnetic field strength is measured by the change of resistance of said magneto-resistance effect material caused by the external magnetic field, wherein the major amount of the electric current passing through the magneto-resistance effect material configured as aforesaid is in parallel to the direction of said external magnetic field, and said magneto-resistance effect material is composed of an artificial metallic lattice membrane which has a structure such that a magnetic thin film layer with thickness of 5–50 Å and non-magnetic metallic thin film layer with thickness of 5–50 Å are interchangeably laminated, and wherein the non-magnetic metallic thin film layer is formed from a member selected from the group consisting of Cu, Ag, Au, Pt and Ru.

5,702,835

SEWAGE SLUDGE COMPOST BATTERY

Ross Carson Larue, 9661 Goodmon Rd., Groveport, Ohio 43125

Continuation-in-part of Ser. No. 243,109, May 16, 1994, abandoned. This application Mar. 7, 1996, Ser. No. 612,426

Int. Cl.[6] H01M *8/16*

U.S. Cl. 429—2 **8 Claims**

1. A biological battery comprising two dissimilar electrodes, with an electromotive potential, inserted into biological matter, wherein said biological matter contains as a primary ingredient moist Sewage Sludge Compost and as a secondary ingredient composted biodegradable filler that remains from the sewage sludge composting process.

5,702,836

ELECTROCATALYST

Chaoying Ma, Nutley, N.J., and Albert D. Kowalak, Cambridge, Mass., assignors to University of Massachusetts, Boston, Mass.

Filed May 3, 1996, Ser. No. 642,428

Int. Cl.[6] H01M *4/88;4/92*

U.S. Cl. 429—13 **23 Claims**

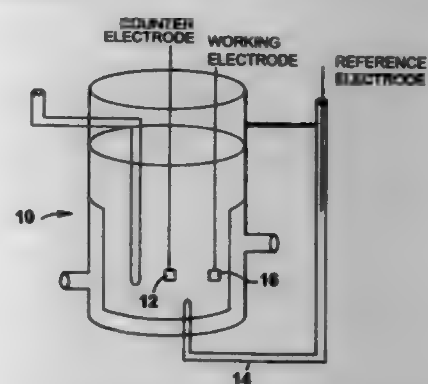

14. An electrocatalyst comprising a plurality of bimetallic colloidal particles, each particle comprising an inner core of iron oxide and an outer shell of platinum oxide.

5,702,837

BONDING MATERIALS FOR ANODE TO ANODE BONDING AND ANODE TO INTERCONNECT BONDING IN SOLID OXIDE FUEL CELLS

Liang An Xue, Lake Hiawatha, N.J., assignor to AlliedSignal Inc., Morris Township, N.J.

Filed Feb. 5, 1996, Ser. No. 597,000

Int. Cl.[6] H01M *4/00*

U.S. Cl. 429—40 **12 Claims**

1. An anode/anode bonding material for anode to anode material bonding in a solid oxide fuel cell stack, said bonding material comprising powders of 1–50 wt % reactive ingredients, 5–60 wt % nickel oxide, 5–60 wt % Zirconia, and at least one component selected from the group consisting of: 1–20 wt % alumina, 0–20 wt % binder, 0–20 wt % plasticizer, 0–10 wt % rice or corn starch, and 0–85 wt % solvent, said reactive ingredients being selected from the group consisting of oxides of tungsten, tantalum, niobium, molybdenum, titanium, and compounds of these oxides with nickel, zirconium, silicon, and aluminum, said binder being selected from the group consisting of polyvinyl butyryl resin, polyvinyl alcohol, synthetic rubber, plastics, cellulose, and polymer systems which thermally decompose without cross linking, said plasticizer being selected from the group consisting of butyl benzyl phthalate and the phthalate group, said solvent being selected from an inorganic or organic solvent which can evaporate at elevated temperatures, said oxides used in said bonding material being capable of being substituted by their precursors from which the oxides can be derived, said bonding material being applied as an interlayer between the faying surfaces of anode material pairs to be bonded and the bonding operation being completed at sintering temperatures ranging from about 1000°–1300° C. with or without a compression pressure.

5,702,838

FUEL CELL DEVICE EQUIPPED WITH CATALYST MATERIAL FOR REMOVING CARBON MONOXIDE AND METHOD FOR REMOVING CARBON MONOXIDE

Eiichi Yasumoto, Katano; Kazuhito Hatoh, Daitou, and Takaharu Gamou, Fujiidera, all of Japan, assignors to Matsushita Electric Industrial Co., Ltd., Osaka-fu, Japan

Filed Aug. 7, 1996, Ser. No. 692,963

Claims priority, application Japan, Aug. 18, 1995, 7-210821; Sep. 29, 1995, 7-253954; Mar. 26, 1996, 8-070498

Int. Cl.[6] H01M *4/90*

U.S. Cl. 429—40 **6 Claims**

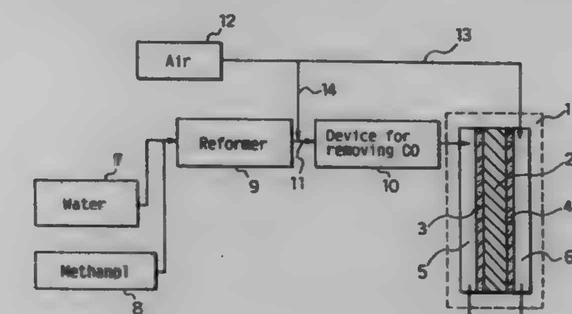

1. A fuel cell device comprising a polymer electrolyte fuel cell, a reformer, a fuel gas feeding path for feeding a reformed gas to a fuel electrode of said fuel cell from said reformer, a feeding path for feeding an oxidant gas to a cathode of said fuel cell and a device for removing carbon monoxide provided in said fuel gas feeding path, wherein said device for removing carbon monoxide is equipped with a catalyst material comprising an A type zeolite carrying at least one metal selected from the group consisting of Pt, Pd, Ru, Au, Rh and Ir, or an alloy of two or more metals.

5,702,839

MANUFACTURE OF ELECTRODES

Jonathan C. Frost, Peppard Common; John M. Gascoyne, Bledlow Ridge; Graham A. Hards, Wallingford, all of United Kingdom; David P. Wilkinson, and Keith B. Prater, both of Vancouver, Canada, assignors to Johnson Matthey Public Limited Company, London, United Kingdom

Continuation of Ser. No. 340,418, Nov. 15, 1994, abandoned. This application Jun. 19, 1996, Ser. No. 666,056

Claims priority, application United Kingdom, Nov. 23, 1993, 9324101

Int. Cl.[6] H01M *4/88*

U.S. Cl. 429—42 **21 Claims**

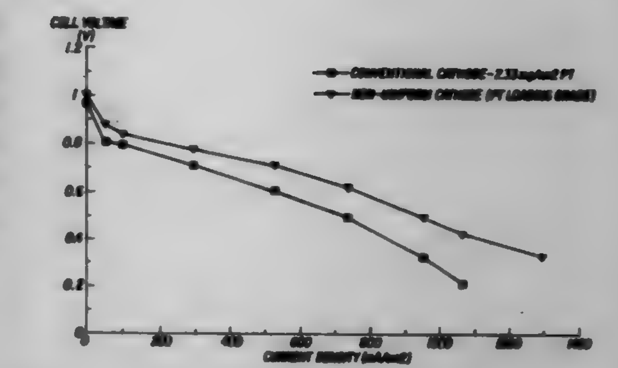

1. A gas-liquid permeable porous electrode, comprising one or more electrode layers supported on one side of a substrate, wherein at least one of the one or more electrode layers is free from electrocatalyst, wherein the one or more electrode layers free from electrocatalyst comprises at least one component, wherein the at least one component is present in a first amount per unit area at a first region adapted to be adjacent a bulk gas inlet, and the at least one component is present in a second amount per unit area at a second region at a point on the substrate remote from the first region.

5,702,840

VENT CAP FOR A LITHIUM BATTERY

Sung-Kwang Byon, Seoul, Rep. of Korea, assignor to Daewoo Electronics Co., Ltd., Seoul, Rep. of Korea

Filed Jul. 17, 1996, Ser. No. 682,006

Claims priority, application Rep. of Korea, Dec. 22, 1995, 95-54848

Int. Cl.[6] H01M *2/04;2/12*

U.S. Cl. 429—89 **6 Claims**

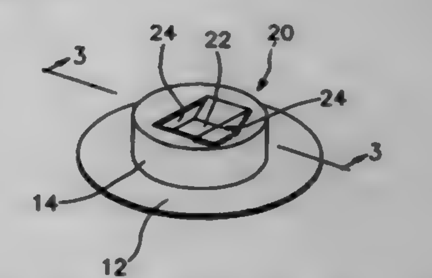

1. A vent cap for a lithium battery which includes an electrolyte which is in electrical contact with an anode of lithium or lithium alloy and a cathode, said vent cap comprising:

a circular flat portion; and

a cylindrical projected portion projected from a central portion of said circular flat portion and disposed coaxially with said circular flat portion,

said cylindrical projected portion having, at a top side thereof, a depression with a rectangular horizontal cross section, and a pair of vent holes formed face to face with each other by cutting two opposing sides of said depression.

5,702,841

ELECTROLYTE VENTING SYSTEM WITH TUBULAR SPLASH GUARDS

Brian J. Thomas, Pewaukee; Gerald D. Slayton, Milwaukee; Jerome R. Heiman, Campbellsport, and Rick Barnett, Milwaukee, all of Wis., assignors to Globe-Union Inc., Milwaukee, Wis.

Filed Jul. 19, 1995, Ser. No. 504,073

Int. Cl.[6] H01M *2/04;2/12*

U.S. Cl. 429—88 **14 Claims**

1. An electrolyte venting system comprising:

a casing defining an electrolyte containing cell;

a primary cover mounted on said casing, said primary cover having a barrel corresponding to said electrolyte containing cell; and

a secondary cover mounted on said primary cover, said secondary cover having coaxially arranged inner and outer tubular

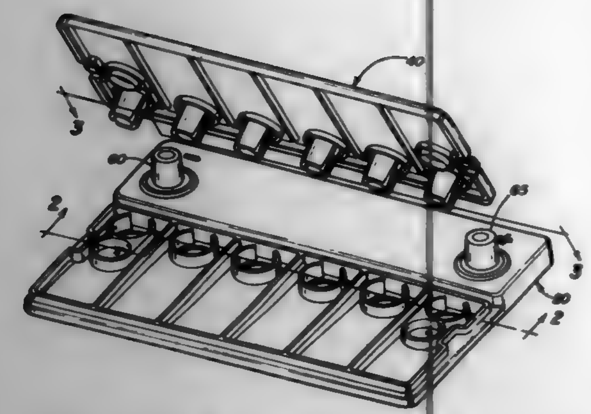

elements extending from a surface thereof, said inner tubular element having a diameter smaller than an inner diameter of said outer tubular element said tubular elements being inserted in said barrel of said primary cover, said outer tubular element having a plurality of slots formed therethrough;

wherein said primary and secondary covers define a chamber disposed around said outer tubular element and in communication with said plurality of slots, said chamber being in fluid communication with an external port, wherein gases which are generated in said electrolyte containing cell pass from said cell through said barrel and between said inner and outer tubular elements then radially outwardly through said slots in said outer tubular element into said chamber and out of said chamber through said external port.

5,702,842
PROCESS FOR CHARGING AND DISCHARGING ZINC/BROMINE BATTERIES
Gerd Tomazic, Mürzzuschlag, Austria, assignor to Elin Energieanwendung Gesellschaft M.B.H., Vienna, Austria
PCT No. PCT/AT93/00197, § 371 Date Jun. 23, 1995, § 102(e) Date Jun. 23, 1995, PCT Pub. No. WO94/15372, PCT Pub. Date Jul. 7, 1994
PCT Filed Dec. 22, 1993, Ser. No. 464,620
Claims priority, application Austria, Dec. 23, 1992, A2554/92
Int. Cl.^{6} H01M *10/42*
U.S. Cl. 429—105 **12 Claims**

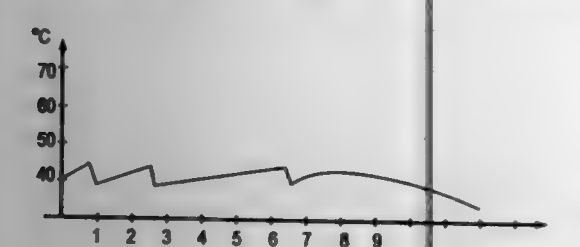

1. A process for charging and discharging zinc/bromine batteries with a plurality of bipolar electrodes including a positive electrode and a negative electrode, a plurality of cathode spaces associated with the positive electrode and a plurality of anode spaces associated with the negative electrode, an anolyte reservoir associated with the negative electrode for supplying a circulating anolyte fluid, a cathodelyte reservoir associated with the positive electrode for supplying a circulating cathodelyte fluid, said process comprising:

during a charging phase, precipitating out metallic zinc at the negative electrode;

depositing at least one of atomic and molecular bromine onto the positive electrode;

binding bromine from an aqueous phase in a poorly water soluble complex with a complex former,

wherein the anode spaces and the cathode spaces communicate via diaphragms,

during a charging and a discharging phase, circulating at least one of the fluid and fluid;

separating, within the catholyte reservoir, an oleophilic cathotyte phase from a hydrophilic catholyte phase; and

after supplying or removing electrical energy from the zinc-bromine battery, passing only the aqueous phase of the catholyte fluid through the cathode spaces and thereafter effecting a temporary interruption and intermittently circulating the aqueous phase through the cathode spaces,

wherein the circulation of the aqueous phase is initiated as a function of temperature of the anolyte fluid in the anode space.

5,702,843
NONAQUEOUS SECONDARY BATTERY
Takehito Mitate, and Motoaki Nishijima, both of Nara-ken, Japan, assignors to Sharp Kabushiki Kaisha, Japan
Filed Apr. 30, 1996, Ser. No. 640,137
Claims priority, application Japan, May 24, 1995, 7-125176; Apr. 9, 1996, 8-086649
Int. Cl.^{6} H01M *4/58*
U.S. Cl. 429—218 **8 Claims**

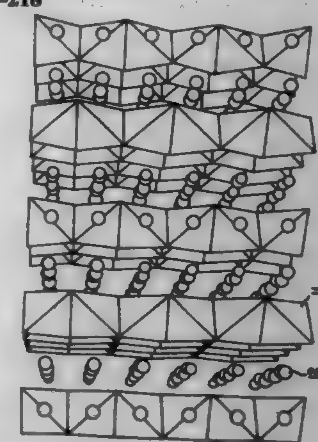

1. A nonaqueous secondary battery comprising a positive electrode, a negative electrode and a nonaqueous ion conductor, either the positive electrode or the negative electrode containing lithium or a lithium absorbable and desorbable substance as an active material thereof and the other electrode contains as the active material a lithium transition-metal nitride of an anti-fluorite structure represented by Li_xMnN_4 wherein $5 \leqq x \leqq 7.6$ or by Li_xFeN_2 wherein $2.5 \leqq x \leqq 3.8$.

5,702,844
NICKEL ELECTRODE FOR AN ALKALINE STORAGE CELL
Patrick Bernard, Massy; André Lecerf, Pace; Stéphane Senyarich, Combs la Ville, and Claudette Audry, Massy, all of France, assignors to SAFT, Romainville, France
Filed Mar. 1, 1996, Ser. No. 609,388
Claims priority, application France, Mar. 3, 1995, 95 02504
Int. Cl.^{6} H01M *4/32;4/36;4/56*
U.S. Cl. 429—223 **12 Claims**

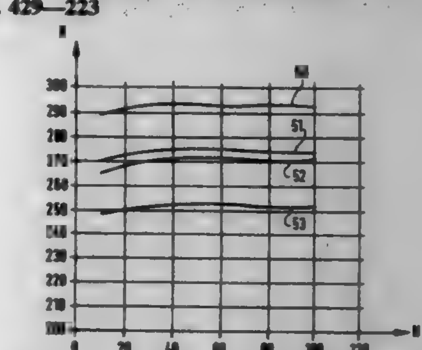

1. A nickel electrode with a non-sintered support for a storage cell containing an alkaline electrolyte, the electrode comprising a porous three-dimensional conductive structure and an electrochemically active material containing particles of a nickel-based hydroxide with a β crystallographic structure, wherein said hydroxide satisfies at least one of the following criteria:

an intensity ratio of the (103) line to the (200) line in an X-ray diffraction diagram generated under $Cu(K_\alpha)$ radiation conditions of the hydroxide of 1.05±0.10;

a coherence length L of 13±3 nm, said coherence length L having the formula:

$$L = \sqrt[3]{(\Phi_{[100]})^2 \times (\Phi_{[001]})}$$

where $\Phi_{[100]}$ is the crystallite size calculated from the mid-height width of the (100) line and $\Phi_{[001]}$ is the crystallite size calculated from the mid-height width of the (001) line of the X-ray diffraction diagram of said hydroxide;

a ratio of the sum of the surface areas of the peaks at 3687± 10 cm^{-1} and 3600±10 cm^{-1} to the surface area of the peak at 3580± 10 cm^{-1} in the Raman spectrum of said hydroxide of 0.11±0.03;

a ratio of the surface area of the peak at 511±10 cm^{-1} to the surface area of the peak at 460±10 cm^{-1} in the Raman spectrum of said hydroxide of 1.1±0.1.

5,702,845
SECONDARY BATTERY USING LITHIUM
Soichiro Kawakami, and Naoya Kobayashi, both of Nara, Japan, assignors to Canon Kabushiki Kaisha, Tokyo, Japan
Filed Mar. 13, 1996, Ser. No. 615,599
Claims priority, application Japan, Mar. 17, 1995, 7-058802; Feb. 23, 1996, 8-036690
Int. Cl.^{6} H01M *4/58;4/38*
U.S. Cl. 429—224 **14 Claims**

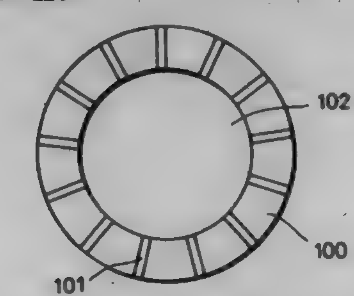

1. A secondary battery using lithium comprising at least a negative electrode, a positive electrode, a separator provided between said negative electrode and said positive electrode, and an electrolyte, wherein at least either of said negative electrode or said positive electrode comprises an active material having a porous hollow structure, wherein said porous hollow structure comprises an outer shell surrounding a hollow core section and a plurality of pores each extending completely through said shell to communicate with said hollow core section.

5,702,846
PHOTOSENSITIVE COMPOSITION FOR VOLUME HOLOGRAM RECORDING
Akihiko Sato; Kenzo Mizutani, both of Suita; Masami Kawabata, Katano, and Iwao Sumiyoshi, Osaka, all of Japan, assignors to Nippon Paint Co. Ltd., Osaka, Japan
Continuation of Ser. No. 536,103, Sep. 29, 1995, abandoned.
This application Feb. 28, 1997, Ser. No. 808,546
Claims priority, application Japan, Oct. 3, 1994, 6-238927
Int. Cl.^{6} G03C *1/73;* **G03H** *1/02*
U.S. Cl. 430—2 **4 Claims**

1. A photosensitive composition for volume hologram recording, which is used for recording interference fringes produced by the interference of a laser beam or a light having excellent coherence

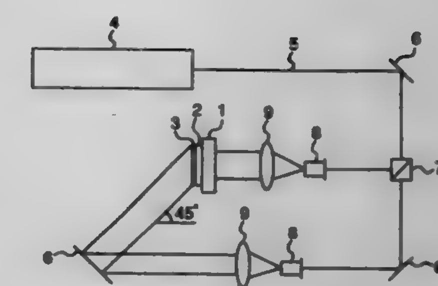

as fringes having different refractive indices, said composition comprising the following components:

(A) a cationic polymerizable compound and a radical polymerizable compound,

(B) a cationic polymerization initiating material, and

(C) a radical polymerization initiating material, wherein at least one of the cationic polymerizable compound and radical polymerizable compound have a siloxane group and are represented by the following:

$$X_1[-\underset{X_3}{\overset{X_2}{Si}}-O]_n-\underset{X_5}{\overset{X_4}{Si}}-X_6 \quad \text{(I)}$$

wherein at least one of X_1 to X_6 has a cationic polymerizable group at the terminal end and the remaining of X_1 to X_6 are the same or different and indicate a hydrogen atom, an alkyl group having 1 to 4 carbon atoms, an alkoxy group having 1 to 4 carbon atoms, a dialkylamino group, a phenyl group or a hydroxyl group; and n is an integer of 1 to 7, and

$$X_1[-\underset{X_3}{\overset{X_2}{Si}}-O]_n-\underset{X_5}{\overset{X_4}{Si}}-X_6 \quad \text{(II)}$$

wherein at least one of X_1 to X_6 has a radical polymerizable group at the terminal end and the remaining of X_1 to X_6 are the same or different and indicate a hydrogen atom, an alkyl group having 1 to 4 carbon atoms, an alkoxy group having 1 to 4 carbon atoms, a dialkylamino group, a phenyl group or a hydroxyl group; and n is an integer of 1 to 7.

5,702,847
PHASE SHIFT PHOTOMASK, PHASE SHIFT PHOTOMASK BLANK, AND PROCESS FOR FABRICATING THEM
Norihiro Tarumoto; Hiroyuki Miyashita; Yukio Iimura, and Koichi Mikami, all of Tokyo, Japan, assignors to Dai Nippon Printing Co., Ltd., Tokyo, Japan
Continuation of Ser. No. 112,965, Aug. 30, 1993, abandoned.
This application May 30, 1995, Ser. No. 453,079
Claims priority, application Japan, Sep. 1, 1992, 4-233731; Sep. 28, 1992, 4-281153; Sep. 28, 1992, 4-281154
Int. Cl.^{6} G03F *9/00*
U.S. Cl. 430—5 **23 Claims**

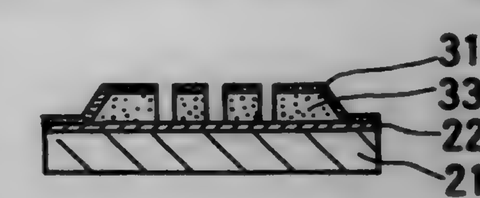

1. A phase shift photomask blank for projection exposure having at least a phase shift layer comprising spin-on glass on a transperent substrate wherein light which impinges on said photomask blank and passes through said phase shift layer is shifted in phase, characterized in that the peripheral region of the phase shift layer

on the substrate is removed to confine the phase shift layer within an area smaller than that of the substrate.

5,702,848

MASK FOR OPTICAL LITHOGRAPHY USING PHASE SHIFT MASKING AND INTEGRATED CIRCUIT PRODUCED THEREFROM

Christopher A. Spence, Sunnyvale, Calif., assignor to Advanced Micro Devices, Inc., Sunnyvale, Calif.

Division of Ser. No. 276,734, Jul. 18, 1994, Pat. No. 5,573,890. This application Aug. 23, 1996, Ser. No. 702,058

Int. Cl.⁶ G03F *9/00*

U.S. Cl. 430—5 **31 Claims**

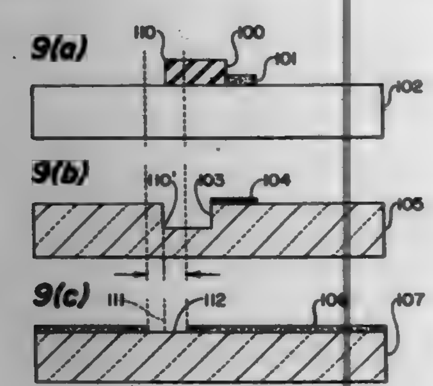

1. An integrated circuit being formed from a mask which is manufactured by the process of:
providing a mask substrate;
forming a gate level pattern on the mask substrate;
identifying regions of the mask substrate which correspond to active regions of the integrated circuit and identifying one or more portions of the gate level pattern which overlap with the active regions of the integrated circuit; and
forming phase shift regions of different phases on opposite sides of at least one identified portion so as to cause light transmitted through the opposite sides to destructively interfere with each other.

5,702,849

MASK FOR TRANSFERRING A PATTERN FOR USE IN A SEMICONDUCTOR DEVICE AND METHOD OF MANUFACTURING THE SAME

Hirofumi Sakata, and Tadashi Nishioka, both of Hyogo, Japan, assignors to Mitsubishi Denki Kabushiki Kaisha, Tokyo, and Ryoden Semiconductor System Engineering Corporation, Hyogo, both of Japan

Division of Ser. No. 311,441, Sep. 26, 1994, Pat. No. 5,622,787. This application Sep. 26, 1996, Ser. No. 721,076

Claims priority, application Japan, Dec. 9, 1993, 5-309248

Int. Cl.⁶ G03F *9/00*

U.S. Cl. 430—5 **7 Claims**

1. A method of manufacturing a mask for transferring a pattern, comprising the steps of:
forming a semiconductor monocrystalline film on a main surface of a transparent substrate;
terminating the main surface of said semiconductor monocrystalline film with hydrogen atoms;
forming a pattern having prescribed feature of hydrogen atoms by replacing a portion of hydrogen atoms at the main surface of said semiconductor monocrystalline film with oxygen atoms;
forming a metal monocrystalline film on said pattern of hydrogen atoms; and

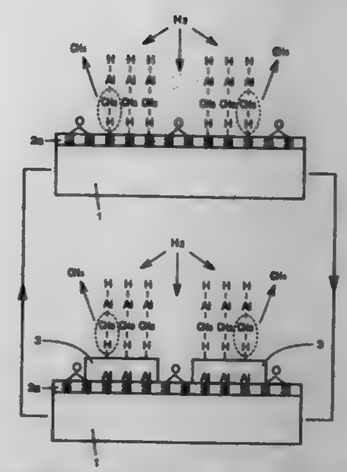

forming a metal oxide film on said metal monocrystalline film.

5,702,850

THERMOSENSITIVE REVERSIBLE COLOR-DEVELOPING AND DISAPPEARING AGENT

Makoto Nishioka, Ichikawa; Kazuo Yamane; Masaki Nishimura, both of Tokyo, and Yoshiyuki Takahashi, Kawasaki, all of Japan, assignors to New Oji Paper Co., Ltd., Tokyo, Japan

Filed Sep. 13, 1995, Ser. No. 527,810

Claims priority, application Japan, Sep. 14, 1994, 6-220189; Feb. 7, 1995, 7-019184; Feb. 28, 1995, 7-040401

Int. Cl.⁶ B41M *5/30*

U.S. Cl. 430—19 **7 Claims**

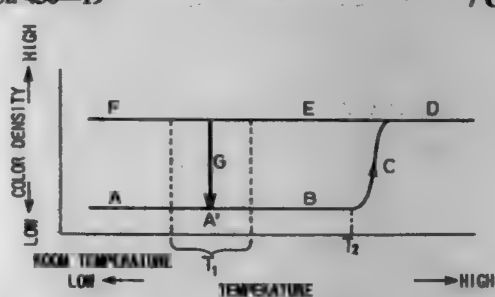

6. A thermosensitive reversible colored image-recording and disappearing material comprising a substrate sheet and a thermosensitive colored image forming layer formed on the substrate sheet and comprising a substantially colorless dye precursor and a reversible color developing and disappearing agent reactive with the dye precursor to thereby develop color upon heating and disappear the color upon heating at a temperature lower than the color-developing temperature, and a binder,
the color developing agent comprising at least one color-developing aromatic compound being selected from the class consisting of the compounds of the formula (II):

$$Y-SO_2NH\underset{\underset{X}{\|}}{C}NH-Z \qquad (II)$$

wherein X represents a member selected from the class consisting of oxygen and sulfur atoms, Y represents a member selected from the class consisting of unsubstituted aromatic cyclic group, and substituted aromatic cyclic groups with at least one substituent selected from the class consisting of lower alkyl groups and lower alkoxy groups; Z represents a member selected from the class consisting of the groups of the formulae:

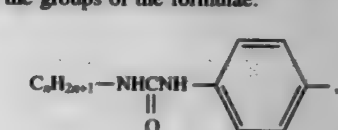

-continued

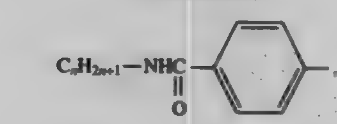

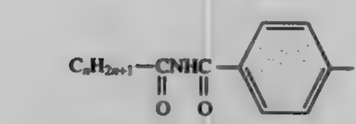

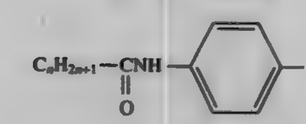

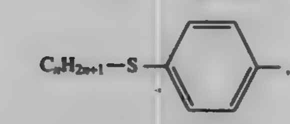

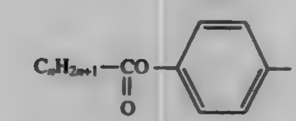

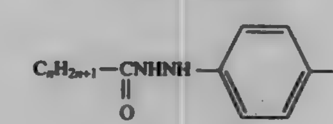

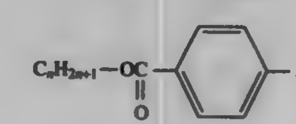

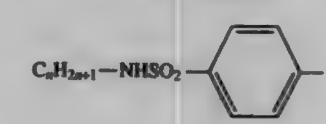

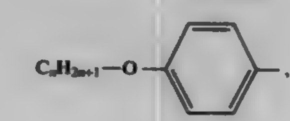

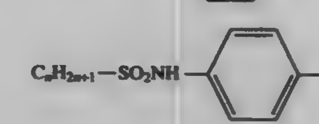

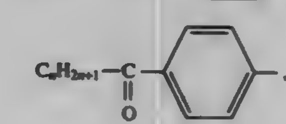

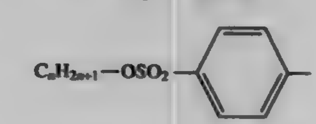

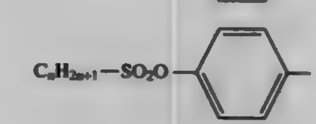

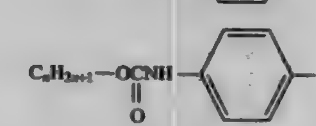

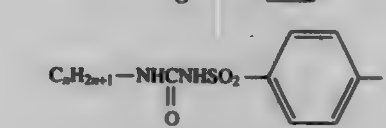

-continued

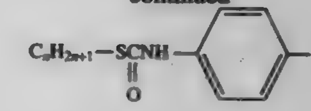

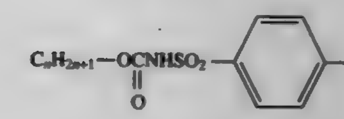

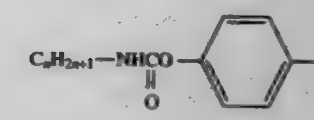

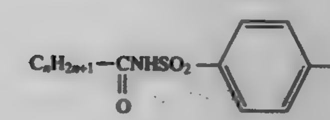

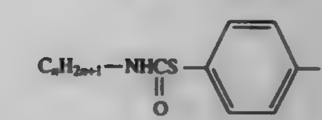

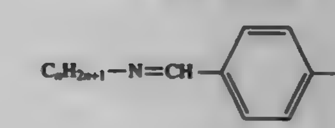

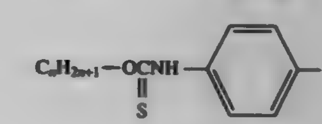

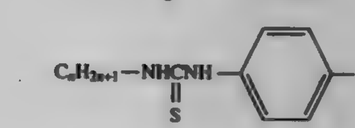

and

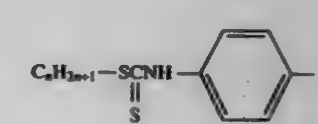

wherein n represents an integer of 11 or more.

5,702,851

METHOD OF PRODUCING A SILVER HALIDE PHOTOGRAPHIC EMULSION, APPARATUS FOR THE SAME, METHOD OF MEASURING A SILVER OR HALOGEN ION CONCENTRATION AND AN APPARATUS FOR THE SAME

Hirokazu Saito, Kanagawa, and Sugihiko Tada, Shizuoka, both of Japan, assignors to Fuji Photo Film Co., Ltd., Kanagawa, Japan

Filed Oct. 27, 1995, Ser. No. 549,543

Claims priority, application Japan, Oct. 28, 1994, HEI 6-287243; Nov. 14, 1994, HEI 6-279305

Int. Cl.⁶ G03K *1/015*

U.S. Cl. 430—30 **3 Claims**

1. A method of producing a silver halide photographic emulsion in which a silver ion concentration in precipitation of a silver halide emulsion in a precipitation bath is controlled by a flow rate controller, wherein a precipitation bath in which stirring is conducted rapidly and uniformly and crystal formation and crystal growth are uniformly performed is used, said method comprising the steps of:
starting delivery of a silver nitrate solution and a halogen salt solution while holding the flow rates of the silver nitrate solution and halogen salt solution constant so as to maintain a

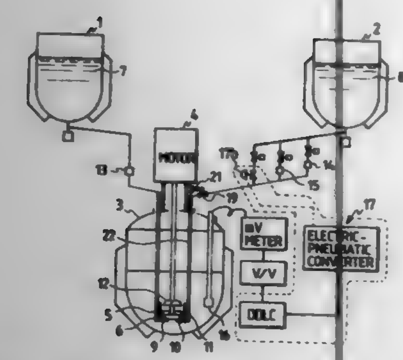

constant-ratio flow rate of the silver nitrate and halogen salt solutions independently of flow rate measurements and calculations performed by the flow rate controller;

designating in the flow rate controller a target E_{Ag} value which corresponds to a pAg value for the desired silver ion concentration;

when an E_{Ag} value of the precipitation bath measured by the flow rate controller reaches a range about the target E_{Ag} value, starting a control of the flow rate of the halogen salt solution to provide controlled variable flow rate by using the flow rate controller which has an operation period equal to or shorter than 1 sec. and has a proportional, integral and differential (PID) action controller using a tuning parameter preset to a minimum response level; and

deriving an optimum control tuning parameter, which corresponds to the preset target E_{Ag} value and a solubility rate of silver/halogen ions to be added, using a theoretical model, and replacing the minimum response level with the optimum control tuning parameter.

5,702,852

MULTI-COLOR METHOD OF TONER TRANSFER USING NON-MARKING TONER AND HIGH PIGMENT MARKING TONER

John W. May, Rochester; Thomas N. Tombs, Brockport, and Dinesh Tyagi, Fairport, all of N.Y., assignors to Eastman Kodak Company, Rochester, N.Y.

Filed Dec. 14, 1995, Ser. No. 572,360

Int. Cl.⁶ G03G *13/01*

U.S. Cl. 430—47 **21 Claims**

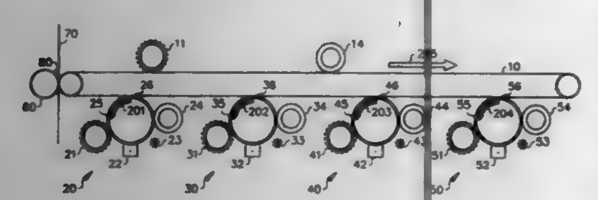

1. A method of forming a desired toner image on a receiver, said method comprising:

forming at least one electrostatic image on at least one imaging member;

toning at least one said electrostatic image with marking toner particles;

transferring said marking toner particles from at least one said imaging member to the surface of an intermediate transfer member in the presence of an electric field which urges said marking toner particles toward said intermediate transfer member; and

transferring said marking toner particles from said intermediate transfer member to a receiver in the presence of an electric field which urges said marking toner particles toward said receiver;

wherein, when transferring said marking toner particles to said intermediate transfer member from at least one said imaging member, said surface of said intermediate transfer member contacts non-marking toner particles at least in areas which receive marking toner particles, and wherein said marking toner particles have a volume weighted diameter of 2 to 8 μm and comprise pigment at a concentration of from 10 to 50% by weight of the total toner composition.

5,702,853

Patent Not Issued For This Number

5,702,854

COMPOSITIONS AND PHOTORECEPTOR OVERCOATINGS CONTAINING A DIHYDROXY ARYLAMINE AND A CROSSLINKED POLYAMIDE

Richard L. Schank, Pittsford; Dale S. Renfer, Webster; William W. Limburg, Penfield; Brendan W. Kunzmann, Rochester, and Damodar M. Pai, Fairport, all of N.Y., assignors to Xerox Corporation, Stamford, Conn.

Filed Sep. 27, 1996, Ser. No. 721,817

Int. Cl.⁶ G03G *5/047;5/147*

U.S. Cl. 430—59 **19 Claims**

1. An electrophotographic imaging member comprising a supporting substrate coated with at least a charge generating layer, a charge transport layer and an overcoating layer, said overcoating layer comprising a dihydroxy arylamine dissolved or molecularly dispersed in a crosslinked polyamide matrix.

5,702,855

ELECTROPHOTOGRAPHIC PHOTOCONDUCTOR CONTAINING A MIXTURE OF A PHENOL COMPOUND AND AN ORGANIC SULFUR-CONTAINING COMPOUND

Takaaki Ikegami, Susono; Takashi Rokutanzono, Tachikawa, and Eiji Kurimoto, Numazu, all of Japan, assignors to Ricoh Company, Ltd., Tokyo, Japan

Filed Aug. 7, 1996, Ser. No. 692,095

Claims priority, application Japan, Aug. 9, 1995, 7-224780; Jul. 5, 1996, 8-195365

Int. Cl.⁶ G03G *5/09*

U.S. Cl. 430—83 **10 Claims**

1. An electrophotographic photoconductor comprising an electroconductive support, and a single-layered photoconductive layer formed thereon comprising a charge generation material, a charge transport material, a binder resin and a mixture of a phenol compound and an organic sulfur-containing compound.

5,702,856

METHOD FOR MAKING AN IMAGE AND A PHOTOSENSITIVE BODY FOR LIQUID DEVELOPMENT

Kiyokazu Mashimo; Fumio Ojima; Toru Ishii, and Katsumi Nukada, all of Minami-Ashigara, Japan, assignors to Fuji Xerox Co, Ltd., Tokyo, Japan

Filed Oct. 8, 1996, Ser. No. 727,313

Claims priority, application Japan, Oct. 11, 1995, 7-263059

Int. Cl.⁶ G03G *13/10;5/087*

U.S. Cl. 430—96 **20 Claims**

1. A method for making an image comprising the steps of providing an electric charge to a photosensitive body for electrophotography which has a photosensitive layer on an electroconductive support, forming an electrostatic image on the photosensitive body and forming a visible image by means of a liquid development utilizing a liquid developer for an electrostatic charge latent image, which developer comprises at least toner particles that are made by dispersing a dye or a pigment in a binder resin, an electrically insulating liquid and an electric charge adjusting agent,

wherein the photosensitive layer contains as an electric charge transporting material an electric charge transporting polymeric compound which contains as a partial moiety of repeating units at least one of the structures represented by the following general formulas I-1 and I-2,

(I-1)

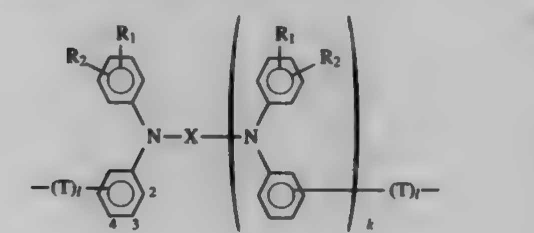

(I-2)

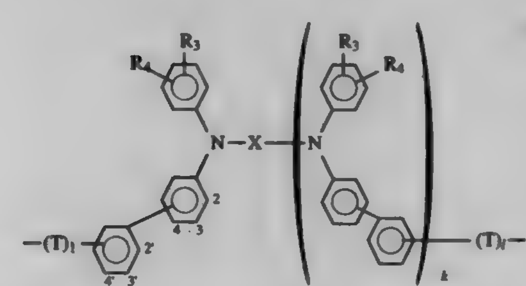

where R_1–R_4 are each independently selected from the group consisting of hydrogen, an alkyl radical that may have a substituent, an alkoxy radical that may have a substituent, a substituted amino radical, halogen and a substituted or unsubstituted aryl radical, X is a substituted or unsubstituted divalent aryl radical, k and l are each an integer selected from 0 and 1, and T is a divalent hydrocarbon radical of 1–10 carbon atoms that may be branched.

5,702,857

METHOD FOR IMPRESSION DEVELOPMENT

Takashi Nagai; Nobuyasu Honda; Tomohide Iida; Toshiaki Akiyama; Koji Kuramashi, and Asao Toda, all of Osaka, Japan, assignors to Mita Industrial Co., Ltd., Osaka, Japan

Filed Feb. 28, 1997, Ser. No. 808,640

Claims priority, application Japan, Mar. 5, 1996, 8-047747; Mar. 5, 1996, 8-047749

Int. Cl.⁶ G03G *13/08*

U.S. Cl. 430—101 **14 Claims**

1. A method for impression development which comprises forming a thin layer of a toner on the surface of a developing roller with a control means for adjusting an amount of the toner held on the surface of the developing roller, and developing an electrostatic latent image formed on a photoconductor by contacting the thin layer with the electrostatic latent image,

said control means comprising a plate-like rigid member whose one surface is pressure-contacted with the surface of the developing roller; and

said toner comprising toner particles, and inorganic fine particles which have a mean particle diameter of 0.1 to 1.0 μm on the volume basis, and which is added to the toner particles in an amount x (parts by weight) satisfying the following expression (i):

$$0.1 \leqq x < 1.5 \qquad \text{(i)}$$

for 100 parts by weight of said toner particles.

5,702,858

TONER

Yasuhito Yuasa; Noriaki Hirota; Akinori Toyoda, and Hideki Tatematsu, all of Osaka, Japan, assignors to Matsushita Electric Industrial Co., Ltd., Osaka, Japan

Continuation-in-part of Ser. No. 419,988, Apr. 11, 1995, Pat. No. 5,561,019. This application Jul. 12, 1996, Ser. No. 679,130

Claims priority, application Japan, Apr. 22, 1994, 6-084529; May 13, 1994, 6-099622; May 13, 1994, 6-099623; May 18, 1994, 6-103726; May 18, 1994, 6-103727; Nov. 18, 1994, 6-284856

Int. Cl.⁶ G03G *9/083;13/09*

U.S. Cl. 430—106.6 **52 Claims**

1. A toner comprising toner base particles comprising a binder resin, and an additive comprising inorganic fine particles of 0.05–4 μm volume-average particle diameter and 0.1–40 m^2/g specific surface area, and negatively charged hydrophobic silica fine particles having 50–350 m^2/g specific surface area and surface treated with a silicone oil,

wherein the inorganic fine particles are prepared by a hydrothermal method or an oxalate thermal decomposition method and comprise at least one compound selected from the group consisting $CaSiO_3$, $LaCrO_3$, $AlPO_4$, NbP $_3O_4$, $LaFeO_3$, $LiNbO_3$, $SrTiO_3$, $BaTiO_3$, $MgTiO_3$, $AlTiO_3$, $CaTiO_3$, $PbTiO_3$, $FeTiO_3$, $SrZrO_3$, $BaZrO_3$, $MgZrO_3$, $AlZrO_3$, $CaZrO_3$, $PbZrO_3$, $MnSiO_3$, $MgSiO_3$, $CaSiO_3$, MoO_2, SnO_2, ZnO_2, MgO_2, NiO, V_2O_5, Nb_2O_5, WO_2, Nb_2O_3—TiO_2, Ta_2O_5—TiO_2, and V_2O_5—ZnO_2.

5,702,859

ELECTROPHOTOGRAPHIC TONER AND PROCESS FOR THE PRODUCTION THEREOF

Hideyuki Kubota, Shizuoka-ken, Japan, assignor to Tomoegawa Paper Co., Ltd., Tokyo, Japan

Filed May 15, 1996, Ser. No. 647,744

Claims priority, application Japan, May 16, 1995, 7-141165; Dec. 22, 1995, 7-350509; Mar. 26, 1996, 8-070537; Apr. 18, 1996, 8-120985

Int. Cl.⁶ G03G *9/097*

U.S. Cl. 430—110 **11 Claims**

1. An electrophotographic toner containing a binder resin and a colorant as main components, the toner further containing a Fischer-Tropsch wax formed from natural gas and having a melting point, measured with a differential scanning calorimeter, of 85° to 100° C.

5,702,860

METHOD FOR PRODUCING NON-SPHERICAL PARTICLE

Mikio Koyama; Kenji Hayashi, and Tomoe Kikuchi, all of Hino, Japan, assignors to Konica Corporation, Japan

Continuation of Ser. No. 236,468, May 2, 1994, abandoned. This application Mar. 21, 1996, Ser. No. 619,143

Claims priority, application Japan, May 18, 1993, 5-115572

Int. Cl.⁶ G03G *9/087*

U.S. Cl. 430—137 **18 Claims**

1. A method for the production of non-spherical particles for an electrophotographic toner, each of the non-spherical particles comprising a plurality of polymer particles, wherein said non-spherical particles have a volume average particle size of 3 through 25 μm,

said method comprising addition of a coagulant or an aqueous solution thereof, and an organic solvent which is infinitely miscible with water, to a polymer particle dispersion, a concentration of said coagulant being at least a critical coagulation concentration of said dispersion,

thereafter, heating said dispersion containing said coagulant and said organic solvent to a predetermined temperature to coagulate said polymer particles.

5,702,861

POSITIVE PHOTORESIST COMPOSITION

Satoshi Niikura; Takako Suzuki; Kousuke Doi; Hidekatsu Kohara, and Toshimasa Nakayama, all of Kanagawa, Japan, assignors to Tokyo Ohka Kogyo Co., Ltd., Kanagawa, Japan

Filed Jan. 30, 1997, Ser. No. 791,166
Claims priority, application Japan, Jan. 30, 1996, 8-035556
Int. Cl.[6] G03F *7/023*
U.S. Cl. 430—191 **9 Claims**

1. A positive photoresist composition comprising:

(A) an alkali-soluble resin;

(B) a quinone diazide group-containing compound; and

(C) at least one compound selected from the polyhydroxy compounds expressed by the following general formula (I),

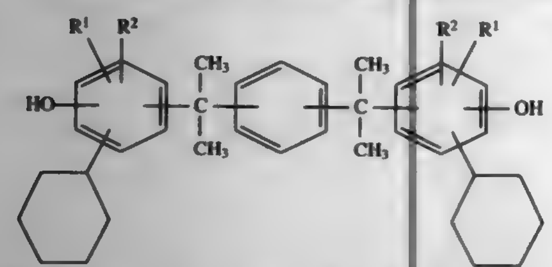

(I)

wherein each of R^1 and R^2 is independently selected from a hydrogen atom, a hydroxyl group, an alkyl group having 1 to 6 carbon atoms, an alkoxy group having 1 to 6 carbon atoms, and a halogen atom.

5,702,862

POSITIVE PHOTORESIST COATING SOLUTION COMPRISING A MIXED SOLVENT OF PROPYLENE GLYCOL MONOPROPYL ETHER AND 2-HEPTANONE

Hayato Ohno; Taku Nakao; Hisanobu Harada; Shinichi Hidesaka; Hidekatsu Kohara, and Toshimasa Nakayama, all of Kanagawa, Japan, assignors to Tokyo Ohka Kogyo Co., LTD., Kanagawa, Japan

Filed Jan. 31, 1997, Ser. No. 797,663
Claims priority, application Japan, Feb. 2, 1996, 8-040461
Int. Cl.[6] G03F *7/023*
U.S. Cl. 430—191 **9 Claims**

1. A positive photoresist coating solution comprising (a) an alkali-soluble resin, (b) a quinone diazide group-containing compound, and (c) an organic solvent in an amount sufficient for dissolving said (a) and (b) components, wherein said organic solvent contains (i) propylene glycol monopropyl ether and (ii) 2-heptanone.

5,702,863

PRODUCTION METHOD OF INK-OOZING PLATE FOR STAMP

Yoichi Ando, Sagamihara, Japan, assignor to Mitsubishi Pencil Kabushiki Kaisha, Tokyo, Japan

Filed Jan. 31, 1996, Ser. No. 594,919
Claims priority, application Japan, Feb. 3, 1995, 7-017358
Int. Cl.[6] G03F *7/00*
U.S. Cl. 430—200 **4 Claims**

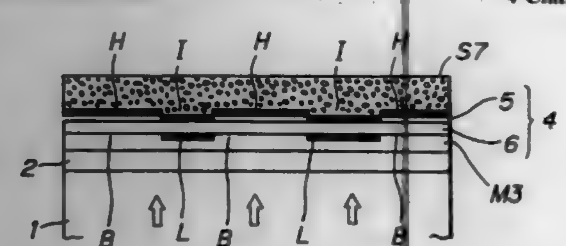

1. A production method for manufacturing an ink-oozing plate for a stamp, comprising the steps of:

superposing a heat transfer sheet comprising an infrared ray-transmittable film coated thereon with a heat transfer substance on the surface of an elastic resin-made stamp material having stamp ink-impregnable open cells so that said heat transfer substance contacts the surface of the stamp material;

superposing thereon a desired impress image copy so that it becomes a mirror image;

compressing the stamp material;

irradiating with a flashlight containing infrared rays from the upper part of said copy to allow the infrared rays to be transmitted through a copy image-absent part on the impress image copy and cause the infrared rays reaching the heat transfer sheet to heat the heat transfer substance present on a part corresponding to said copy image-absent part;

causing said heat transfer substance to transfer on the surface of the stamp material and melt the surface layer of the stamp material to form a transfer molten part where the open cells are blocked, and

allowing the copy image part on the impress image copy to cut off or absorb the infrared rays to cause no heat transfer substance present on the pan of the heat transfer sheet corresponding thereto to be heated and transferred, which does not lead to blocking the cells present on the surface of the corresponding stamp material, to form a non-transfer part.

5,702,864

REDUCED SCRATCH SENSITIZATION IN NUCLEATED PHOTOGRAPHIC FILM

John F. Pilot, Carteret; Shirley M. Madamba, Middletown, and Penny M. Mullen, Howell, all of N.J., assignors to Sun Chemical Corporation, Fort Lee, N.J.

Filed Aug. 30, 1996, Ser. No. 706,015
Int. Cl.[6] G03C *1/76; 1/04*
U.S. Cl. 430—264 **20 Claims**

1. A scratch resistant, negative-type, nucleated silver halide photographic material comprising:

a substrate;

a first light-sensitive silver halide emulsion layer coated on said substrate, containing at least one nucleator having a derivative of hydrazine; and

an aqueous, gelatin-based, anti-abrasion layer coated on said first layer, said anti-abrasion layer containing a hardening agent and an oligomer, wherein said oligomer has at least one polyalkylene oxide containing 4 to 40 recurring units of ethoxylate and is present in an amount sufficient to scratch-desensitize the photographic material.

5,702,865

METHOD OF FORMING PHOTOGRAPHIC RELIEF IMAGES

Michael John Simons, Ruislip, United Kingdom, assignor to Eastman Kodak Company, Rochester, N.Y.

Filed Oct. 10, 1996, Ser. No. 728,584
Claims priority, application United Kingdom, Oct. 12, 1995, 9520918
Int. Cl.[6] G03C *5/315; 5/30*
U.S. Cl. 430—264 **6 Claims**

1. A method of forming a relief image comprising:

A) imagewise exposing a photographic silver halide material that comprises a support bearing at least one silver halide emulsion and, having incorporated in the emulsion layer or a layer adjacent thereto a tanning developing agent of the formula:

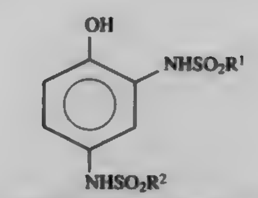

(I)

wherein R^1 and R^2 are each an alkyl group of at least 3 carbon atoms, or an aryl group,

B) treating said material with an alkaline solution having a pH greater than 9, thereby hardening developing areas of said material, and

C) treating said material with an aqueous medium to remove unhardened areas.

5,702,866

DIHYDRAZIDES

Mario Fryberg, Praroman; Otto Göttel, and Thomas Stauner, both of Marly, all of Switzerland, assignors to Ilford A.G., Fribourg, Switzerland

Continuation of Ser. No. 342,207, Nov. 18, 1994, abandoned. This application Oct. 24, 1996, Ser. No. 736,599
Claims priority, application United Kingdom, May 24, 1994, 9410425
Int. Cl.[6] G03C *1/295*
U.S. Cl. 430—264 **27 Claims**

1. A photographic silver halide material which comprises at least one silver halide emulsion layer, wherein at least one layer of said material comprises at least one hydrazide having the general formula:

$$B—(A^+)—C\ (G^-)$$

where B and C are the same or different and have formula I:

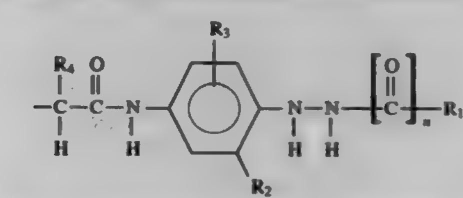

I

where R_1 is hydrogen, alkyl, alkoxy or a blocking group selected from the group consisting of

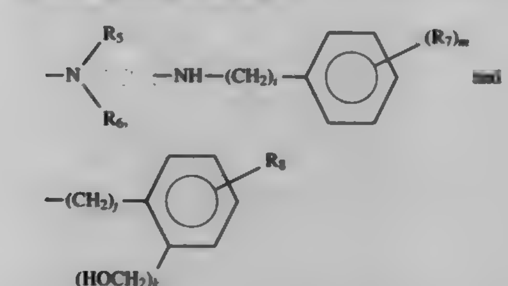

wherein R_5 and R_6 each are independently selected from the group consisting of hydrogen, alkyl, aminoalkyl, alkylaminoalkyl, acylaminoalkyl, alkylsulphonylaminoalkyl, arylsulphonylaminoalkyl, trialkylammoniumalkyl, hydroxyalkyl, haloalkyl, cycloalkyl, alkoxyalkyl, polyethyleneoxy, aryl, aralkyl, heterocyclic, and wherein R_5 and R_6 taken together can form a ring which optionally contains at least one unsaturated bond;

R_7 and R_8 are independently selected from the group consisting of hydrogen, alkyl, aralkyl, hydroxy, alkoxy, haloalkoxy, aryloxy, aralkoxy, hydroxyalkyl, acylamino, phenoxy, alkoxyalkoxy, sulphonylamino and halogen;

wherein R_2 and R_3 are independently hydrogen, alkyl, alkoxy, hydroxyalkyl, aralkyl, aralkoxy and halogen; and

R_2 and R_3 taken together can form a saturated or unsaturated carbocyclic ring;

R_4 is hydrogen, alkyl or substituted alkyl; and

m is 1 or 2; i, j and k are independently 0 or 1; and

A^+ is an activity regulating group having the formula:

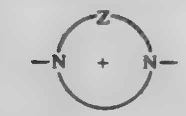

where Z denotes the elements necessary to form a 5-membered heterocyclic ring, optionally having one or two double bonds:

n is i or 2; and G^- is a negatively charged ion.

5,702,867

METHOD FOR FORMING FINE PATTERN IN SEMICONDUCTOR DEVICE

Myung Seon Kim, Kyoungki-do, Rep. of Korea, assignor to Hyundai Electronics Industries, Co., Ltd., Kyoungki-do, Rep. of Korea

Filed Aug. 23, 1994, Ser. No. 294,539
Claims priority, application Rep. of Korea, Aug. 23, 1993, 1993-16329
Int. Cl.[6] G03F *7/36*
U.S. Cl. 430—291 **3 Claims**

1. A method for forming fine pattern in a semiconductor device, comprising the steps of:

providing an objective material layer to be patterned atop a semiconductor substrate;

coating a photosensitive film on the objective material layer;

selectively exposing the surface of the photosensitive film to determine a region to be patterned in the surface of the photosensitive film;

diffusing silicon into the surface of the photosensitive film by use of hexamethyl disilazane (HMDS) or tetramethyl disilazane (TMDS), to form a uniformly thin, silylated photosensitive material film at an unexposed surface of the photosensitive film and a thick, silylated photosensitive material film having a shape of convex lens at the exposed surface of the photosensitive film;

etching the silylated photosensitive material layer and the photosensitive film with plasma containing NF_3 and O_2, to such a predetermined thickness as to remove the edge of the silylated photosensitive material having a shape of convex lens, to form a silylated photosensitive material pattern which finely determines the region to be patterned; and

subjecting the photosensitive film exposed by the silylated photosensitive material pattern to anisotropic etch with oxygen-based plasma, to selectively expose the objective material layer to be patterned.

5,702,868

HIGH RESOLUTION MASK PROGRAMMABLE VIA SELECTED BY LOW RESOLUTION PHOTOMASKING

Mark D. Kellam, and Gershon Kedem, both of Chapel Hill, N.C. 27514, assignors to Astarix Inc.

Continuation of Ser. No. 46,529, Apr. 13, 1993, abandoned. This application May 8, 1995, Ser. No. 437,222
Int. Cl.[6] G03F *7/20*
U.S. Cl. 430—312 **4 Claims**

1. A double exposure method for fabricating a selected set of structures on a substrate, said method comprising the steps of:

providing said substrate with a radiation sensitive material disposed on said substrate;

transmitting a first radiation pattern representing a plurality of first substantially identical patterns towards said substrate for exposing first areas of said radiation sensitive material to said

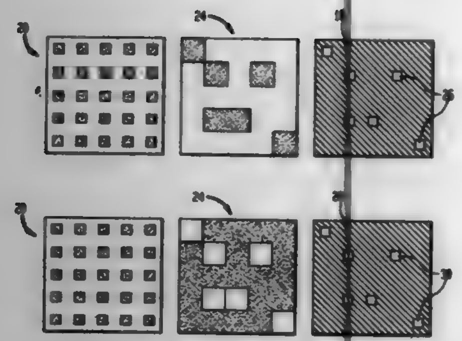

first radiation pattern to form a plurality of first substantially identical patterns in said radiation sensitive material;
transmitting a second radiation pattern representing a second plurality of patterns towards said substrate for exposing at least one but not all of said first areas of said radiation sensitive material to said second plurality of patterns to select at least one but not all of said formed plurality of first substantially identical patterns in said radiation sensitive material;
removing portions of said radiation sensitive material in accordance with said first and second radiation patterns; and
forming said selected set of structures in said substrate through said removed portions of said radiation sensitive material.

5,702,869

SOFT ASHING METHOD FOR REMOVING FLUORINATED PHOTORESISTS LAYERS FROM SEMICONDUCTOR SUBSTRATES

Rong-Wu Chien, Chyai, and Hsiu-Lan Li, Hsinchu, both of Taiwan, assignors to Vanguard International Semiconductor Corporation, Hsin-Chu, Taiwan

Filed Jun. 7, 1996, Ser. No. 660,302

Int. Cl.⁶ G03F *7/36*

U.S. Cl. 430—313 **24 Claims**

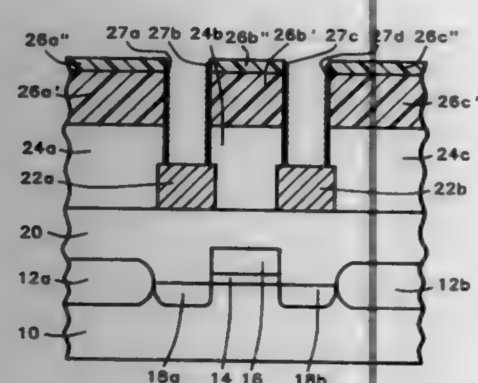

1. A method for removing from a semiconductor substrate a partially fluorinated photoresist layer comprising:
forming over a semiconductor substrate a partially fluorinated photoresist layer, the partially fluorinated photoresist layer having a fluorinated surface layer and an underlying non-fluorinated remainder layer;
removing the fluorinated surface layer through a first etch method, the first etch method employing an oxygen containing plasma at a radio frequency power no greater than about 500 watts and a temperature no greater than about 120 degrees centigrade; and
removing then the underlying non-fluorinated remainder layer through a second etch method.

5,702,870

INTEGRATED-CIRCUIT VIA FORMATION USING GRADIENT PHOTOLITHOGRAPHY

Hunter Barham Brugge, San Antonio, Tex., assignor to VLSI Technology, Inc., San Jose, Calif.

Continuation of Ser. No. 113,498, Aug. 27, 1993, abandoned.

This application Sep. 9, 1996, Ser. No. 628,768

Int. Cl.⁶ G03C *5/16;* **H01L** *21/441;21/473;* **C23F** *1/00*

U.S. Cl. 430—314 **4 Claims**

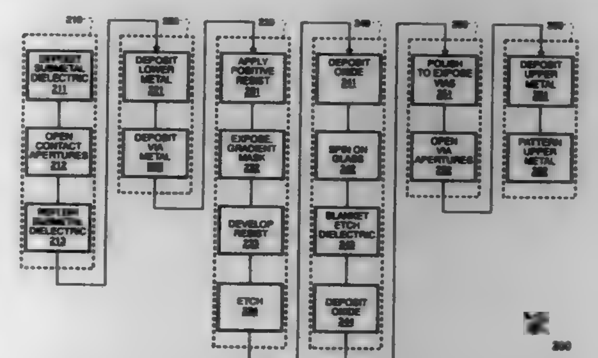

1. A method of forming a metal interconnect structure in an integrated circuit, said method comprising the steps of:
depositing a lower metal layer over a submetal dielectric;
depositing a via metal layer over said lower metal layer;
applying positive photoresist over said via metal layer;
exposing said photoresist so that a removal-pattern region of said photoresist is relatively heavily exposed, a via-pattern region of said photoresist is relatively lightly exposed, and a lower-pattern region of said photoresist is relatively moderately exposed;
developing said photoresist;
etching so as to remove said lower and via metal layers from said removal-pattern region, remove said via metal layer from said lower-pattern region while leaving at least some thickness of said lower metal layer in said lower-pattern region, and leaving at least some of said via metal layer in said via-pattern region;
forming intermetal dielectric over the structure resulting from said etching;
forming via openings through said dielectric to expose at least some of said via metal layer in said via-pattern region;
depositing an upper metal layer on said intermetal dielectric so as to contact said via metal layer in said via-pattern region; and
photolithographically patterning said upper metal layer to form a relief pattern therein;
whereby said via metal layer constitutes at least part of a via between said lower metal layer and said upper metal layer.

5,702,871

LIQUID CRYSTAL DISPLAY WITH LOW RESISTANCE ELECTRODE AND METHOD THEREFOR

Sung-lim Choi, and Kwang-jin An, both of Kyunggi-do, Rep. of Korea, assignors to Samsung Display Devices Co., Ltd., Kyunggi-Do, Rep. of Korea

Continuation of Ser. No. 269,490, Jul. 1, 1994, abandoned.

This application Dec. 16, 1996, Ser. No. 766,104

Claims priority, application Rep. of Korea, Oct. 23, 1993, 1993-21891

Int. Cl.⁶ G03F *7/40;* **G02F** *1/155*

U.S. Cl. 430—314 **12 Claims**

1. A method for producing a liquid crystal display comprising the steps of:
depositing an indium tin oxide (ITO) layer on a glass substrate;
coating a photoresist on said ITO layer;
exposing a portion of the photoresist using a chromium mask;

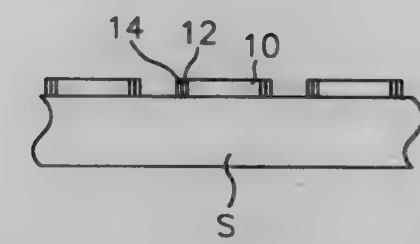

developing the photoresist to remove one of either the exposed portion of the photoresist or unexposed portion of the photoresist so that a photoresist pattern is formed on the ITO layer;
forming the ITO layer to have the same pattern as the photoresist pattern by using an ITO etchant and thereby forming sides on the ITO layer protected by the photoresist pattern;
forming first and second metal layers on the sides of said ITO layer protected by the photoresist pattern by first and second electrodeless plating; and
removing the photoresist pattern.

7. A method for producing a liquid crystal display comprising the steps of:
depositing an indium tin oxide (ITO) layer on a glass substrate;
applying a photoresist layer to said ITO glass substrate;
exposing said photoresist layer using a chromium mask to form a photoresist pattern;
developing the photoresist to expose a portion of the ITO layer;
etching the exposed portion of said ITO layer and thereby forming sides on the ITO layer;
forming first and second metal layers on the sides of the ITO layer by first and second electrodeless plating; and
removing said photoresist.

5,702,872

PROCESS FOR RESIST PATTERN FORMATION USING POSITIVE ELECTRODEPOSITION PHOTORESIST COMPOSITIONS

Genji Imai; Naozumi Iwasawa, both of Hiratsuka, and Tsuguo Yamaoka, Funabashi, all of Japan, assignors to Kansai Paint Co., Ltd., Hyogo, Japan

Division of Ser. No. 233,443, Apr. 26, 1994, Pat. No. 5,527,656.

This application Mar. 4, 1996, Ser. No. 610,237

Claims priority, application Japan, Apr. 27, 1993, 5-125499; Apr. 27, 1993, 5-125500; Apr. 27, 1993, 5-125501

Int. Cl.⁶ G03F *7/027*

U.S. Cl. 430—326 **44 Claims**

1. A process for resist pattern formation, which comprises conducting sequentially:
(i) a step of electrodepositing a coating on an electroconductive surface of a substrate a positive electrodeposition photoresist composition comprising, as essential components:
(A) 100 parts by weight of a polymer having carboxyl group(s) in an amount of 0.5 to 10 equivalents per kg of the polymer and optionally having hydroxyphenyl group(s) in an amount of at least 1 equivalent per kg of the polymer;
(B) 5 to 150 parts by weight of a compound having at least 2 vinyl ether groups per molecule; and
(C) 0.1 to 40 parts by weight, per 100 parts by weight of the sum of polymer (A) and the vinyl ether group-containing compound (B), of a compound which generates an acid when irradiated with an actinic ray, said composition being dissolved or dispersed in an aqueous medium by neutralizing the carboxyl group(s) in the polymer (A) with a basic compound,
(ii) a step of heating the coated substrate,
(iii) a step of irradiating the resulting substrate selectively with an actinic ray,
(iv) a step of heating the irradiated substrate, and
(v) a step of subjecting the resulting substrate to development with a basic developer.

5,702,873

REDOX AMPLIFICATION SOLUTIONS CONTAINING METAL ION SEQUESTERING AGENTS

Peter Jeffery Twist, Gt Missenden, United Kingdom, assignor to Eastman Kodak Company, Rochester, N.Y.

Continuation of Ser. No. 244,350, May 26, 1994, abandoned.

This application Apr. 10, 1996, Ser. No. 630,196

Claims priority, application United Kingdom, Dec. 3, 1991, 9125689

Int. Cl.⁶ G03C *7/00;7/26;9/18;9/26*

U.S. Cl. 430—373 **20 Claims**

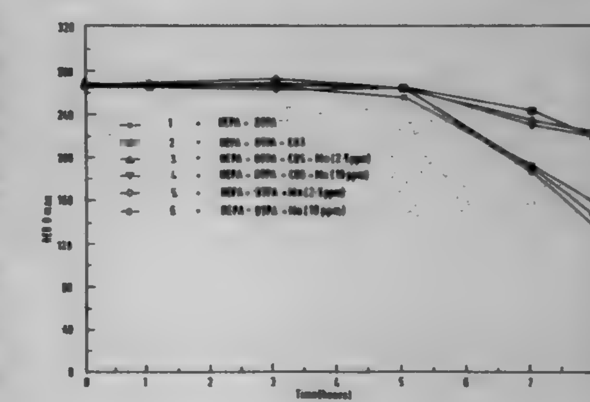

1. A redox-amplification solution comprising hydrogen peroxide or a substance capable of releasing hydrogen peroxide, a reducing agent, and in combination three or more sequestering agents, said sequestering agents being capable of complexing with transition metal ions emanating from an exposed silver halide photographic material, thereby inhibiting catalysis of the decomposition of the redox-amplification solution by said metal ions, wherein at least one sequestering agent is selected from the group consisting of polyalkylcarboxlic, polyalkylphosphonic or polyalkylsulphonic acid compounds of formula (I)

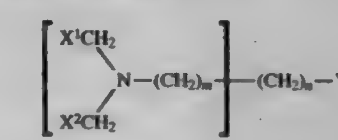

(I)

(A)

wherein X^1 and X^2 are the same or different and each is a hydrogen atom, a straight or branched chain alkyl group having 1 to 6 carbon atoms, a hydroxyl, carboxyl, sulphonyl or phosphonyl group, or a repeat unit of group A or group B, Y is a hydrogen atom, a straight or branched chain alkyl group having 1 to 6 carbon atoms, a hydroxyl, carboxyl, sulphonyl, or phosphonyl group, or the group B, wherein group B is

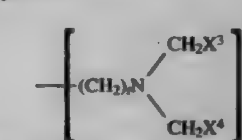

(B)

wherein X^3 and X^4 are the same or different and are as defined for X^1 and X^2, wherein the sum of m, n and r is an integer from 1 to 10, and wherein one or both of the hydrogen atoms in each of the $(CH_2)_m$, $(CH_2)_n$, or $(CH_2)_r$ groups may be replaced by a straight or branched chain alkyl group having 1 to 6 carbon atoms, with the proviso that at least one of X^1, X^2, X^3 and X^4 includes a carboxylic, sulphonic, or phosphoric acid group or a salt thereof, and at least one sequestering agent is selected from the group consisting of compounds of formula (II)

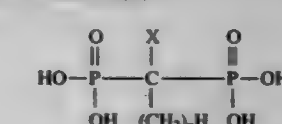

(II)

wherein X is a hydrogen atom, a halogen atom or a hydroxyl group and n is an integer from 0 to 12; and at least one sequestering agent is selected from the group consisting of polyhydroxyphenyl compounds of formula (III)

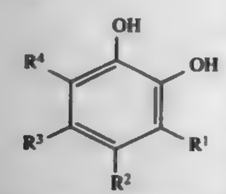

(III)

wherein R^1, R^2, R^3, and R^4 are the same or different and each is a hydrogen atom, a straight or branched chain alkyl group having 1 to 6 carbon atoms, a hydroxyl group, a sulphonyl group or a carboxyl group.

5,702,874

METHOD OF PROCESSING PHOTOGRAPHIC SILVER HALIDE MATERIALS

John Richard Fyson, Hackney, and Gareth Bryn Evans, Potten End, both of United Kingdom, assignors to Eastman Kodak Company, Rochester, N.Y.

Filed Sep. 27, 1996, Ser. No. 722,923

Claims priority, application United Kingdom, Sep. 29, 1995, 9519850

Int. Cl.⁶ G03C *7/42*

U.S. Cl. 430—373 **11 Claims**

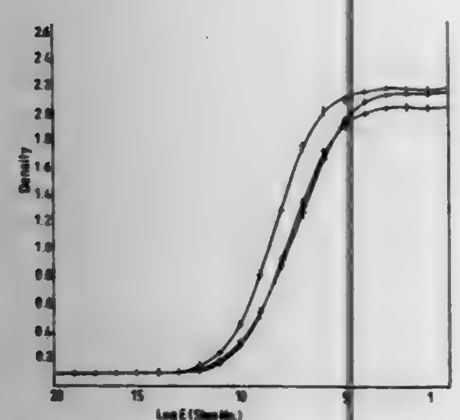

1. A method of processing an imagewise exposed photographic silver halide material comprising at least two dye image-forming layer units responsive to different regions of the spectrum in which the silver halide in each layer comprises at least 85 mol % silver chloride, and the layer units contain a dye image-forming color coupler,

said method comprising, in sequence, the step of dye image formation, followed by the steps:

(a) treating said material in a bath which stops dye image formation

(b) bleaching said material in a first bleach bath containing hydrogen peroxide as bleaching agent, or a material that provides hydrogen peroxide, and an alkali metal halide,

(c) fixing said material in a fixing bath that contains an alkali metal sulfite or a material that provides sulfite as fixing agent, and

(d) treating said material in a bath containing a colorless oxidizing agent that destroys sulfite ions which bath has a pH of 5 or below, and wherein no washing or stabilizing steps are carried out after step (d).

5,702,875

WEAKLY ALKALINE ASCORBIC ACID DEVELOPING COMPOSITION, PROCESSING KIT AND METHOD USING SAME

Robert John Opitz, and Silvia Zawadzki, both of Rochester, N.Y., assignors to Eastman Kodak Company, Rochester, N.Y.

Filed Jun. 28, 1996, Ser. No. 674,497

Int. Cl.⁶ G03C *5/30*

U.S. Cl. 430—492 **8 Claims**

1. An aqueous black-and-white developing composition that is free of dihydroxybenzene developing agents, said developing composition having a pH of greater than 7 but less than 9, and comprising:

an ascorbic acid developing agent,

an auxiliary super-additive developing agent,

borate as the sole buffer in an amount of at least 0.001 mol/l, and a preservative,

wherein the molar ratio of said ascorbic acid developing agent to said auxiliary super-additive developing agent is at least about 10:1.

5,702,876

PHOTOGRAPHIC FILM BASE AND COLOR PHOTOGRAPHIC MATERIAL COMPRISING A BINDERLESS MAGNETIC LAYER

Phillip A. Taylor, Lake Elmo; Jeffrey M. Florczak, Maplewood, both of Minn.; Mark A. Peterson, River Falls; Paul R. Iverson, St. Croix Falls, both of Wis.; Joseph Skorjanec, White Bear Lake, and Robert D. Lorentz, North Oaks, both of Minn., assignors to Minnesota Mining and Manufacturing Company, St. Paul, Minn.

Filed Apr. 30, 1996, Ser. No. 640,419

Int. Cl.⁶ G03C *1/76*

U.S. Cl. 430—496 **17 Claims**

1. A color photographic material comprising a photographic film base and at least one light-sensitive layer coated thereon, said photographic film base comprises a transparent support base and a binderless layer of magnetic material coated thereon, wherein said support base having said binderless layer coated thereon has an optical transmission greater than or equal to 37% at 800 nm.

5,702,877

COLOR PHOTOGRAPHIC SILVER HALIDE MATERIAL

Heinrich Odenwälder, Leverkusen; Hans Langen, Bonn; Uwe Dahlhaus, Burscheid, and Heinz-Dieter Schütz, Leverkusen, all of Germany, assignors to Agfa-Gevaert AG, Germany

Filed Feb. 26, 1996, Ser. No. 605,475

Claims priority, application Germany, Mar. 7, 1995, 195 07 913.2

Int. Cl.⁶ G03C *7/32*

U.S. Cl. 430—551 **14 Claims**

1. A color photographic silver halide material which comprises a transparent support, at least one silver halide emulsion layer and at least one non-light sensitive layer applied thereto, wherein the silver halide emulsion layer contains at least one color coupler and a silver halide consisting of 0 to 15 mol- % silver iodide, 0 to 20 mol- % of silver chloride and 65 to 100 mol- % of silver bromide, and wherein the silver emulsion layer or the non-light sensitive layer contains a compound of the formula (I)

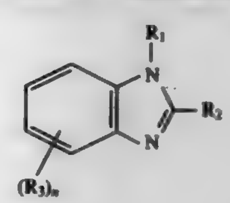

(I)

wherein

R_1 is hydrogen, unsubstituted alkyl having 1 to 20 C atoms or alkyl with 1 to 4 C atoms substituted by hydroxy, phenyl, alkylmercapto or arylmercapto,

R_2 is unsubstituted saturated or unsaturated alkyl having 1 to 20 C atoms, alkyl having 1 to 4 C atoms substituted by alkylmercapto, cyano or alkoxycarbonyl or is SR_4,

R_3 is alkyl having 1 to 20 C atoms, phenyl or halogen,

R_4 is alkyl having 1 to 20 C atoms and

n is 0, 1 or 2.

5,702,878

SILVER HALIDE PHOTOGRAPHIC EMULSION AND PHOTOGRAPHIC MATERIAL USING THE SAME

Yoichi Maruyama, Kanagawa, Japan, assignor to Fuji Photo Film Co., Ltd., Kanagawa, Japan

Filed Aug. 18, 1995, Ser. No. 516,552

Claims priority, application Japan, Aug. 22, 1994, HEI 6-218302; Sep. 20, 1994, HEI 6-250151

Int. Cl.⁶ G03C *1/035*

U.S. Cl. 430—567 **8 Claims**

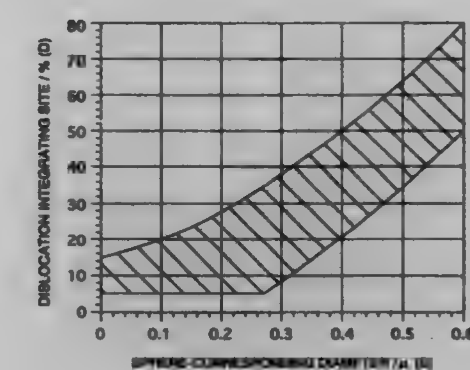

1. A silver halide photographic emulsion comprising silver halide tabular grains having integrated therein dislocation lines and having an aspect ratio of 1.5 or more and a circle-corresponding diameter of 0.6 μm or less, wherein said tabular grains occupy 50% or more of the total projected area and said dislocation lines begin at a site, D, based on the amount of silver, such that D satisfies the following expression (I):

$$D=(1.4S^{1.5})\times 100\pm 15 \quad \text{(I)}$$

wherein D represents a ratio (%) of silver amount consumed prior to the integration of the dislocation lines to the total amount of silver used and S represents a sphere-corresponding diameter (μm) of a final grain, and D is at least 5.

5,702,879

PROCESS OF PREPARING MONODISPERSED TABULAR SILVER HALIDE EMULSION

Richard A. Barcock, Bishop's Stortford, United Kingdom, assignor to Minnesota Mining and Manufacturing Company, St. Paul, Minn.

Filed Feb. 27, 1996, Ser. No. 606,715

Claims priority, application European Pat. Off., Mar. 29, 1995, 95104629

Int. Cl.⁶ G03C *1/015; 1/043; 1/035*

U.S. Cl. 430—569 **17 Claims**

1. A process of preparing monodispersed tabular silver halide grain emulsions, said process comprising the following steps:

(a) forming a population of silver halide nuclei in a dispersing medium having a pH lower than 3 and a pBr in the range of from 1 to 2,

(b) ripening said population of silver halide nuclei in presence of a silver halide solvent,

(c) performing a first growing of said silver halide nuclei at a pBr value in the range of from 1 to 2, and

(d) performing a second growing of said silver halide nuclei at a pBr value in the range of from 2 to 2.7.

5,702,880

BLOOD SUBSTITUTE COMPRISING 0-5 MM K⁺

Paul E. Segall; Hal Sternberg; Harold D. Waitz, and Judith M. Segall, all of Berkeley, Calif., assignors to BioTime, Inc., Berkeley, Calif.

Continuation-in-part of Ser. No. 133,527, Oct. 7, 1993, abandoned, which is a continuation-in-part of Ser. No. 71,533, Jun. 4, 1993, Pat. No. 5,407,428. This application Jun. 3, 1994, Ser. No. 253,384

Int. Cl.⁶ A01N *1/02;* **A61M** *37/00*

U.S. Cl. 435—1.2 **10 Claims**

1. An aqueous blood substitute solution comprising:

0–5 mM K^+;

130–150 mM Na^+;

0.2–0.45 mM Mg^{++};

2.0–2.5 mM Ca^{++};

70–160 mM Cl^-;

6% wt/wt ofhy&oxyethyl starch;

2–50 mM glucose;

and lactate in a concentration sufficient to provide in vivo buffering in a physiological range;

with the proviso that said aqoeous blood substitute solution does not include a conventional biological buffer.

5,702,881

METHOD AND SOLUTION FOR ORGAN PRESERVATION COMPRISING RETINAL-DERIVED GROWTH FACTOR, CYCLODEXTRIN, MUCOPOLYSACCHARIDE AND FLUOROCARBON

Lauren Brasile, Albany, and Jolene Clarke, Ballston Spa, both of N.Y., assignors to Alliance Pharmaceutical Corp., San Diego, Calif.

Continuation-in-part of Ser. No. 33,629, Mar. 16, 1993, abandoned. This application Jun. 7, 1995, Ser. No. 476,456

Int. Cl.⁶ A01N *1/02;* **C12N** *5/00*

U.S. Cl. 435—1.2 **25 Claims**

1. A method for preserving an organ prior to transplantation, comprising the steps of:

flushing an organ with a preservation solution comprising one or more serum proteins, retinal-derived growth factor in a range of about 0.001–5 g/L, one or more mucopolysaccharides, cyclodextrin, and emulsified liquid fluorocarbon, wherein said fluorocarbon comprises between about 1% and 50% v/v of said preservation solution; and thereafter

storing said organ at a temperature between about 18° C. and about 37° C. for at least 15 minutes.

5,702,882

REAGENT FOR ENDOTOXIN-SPECIFIC ASSAY

Hiroshi Tamura; Toshio Oda, and Shigenori Tanaka, all of Tokyo, Japan, assignors to Seikagaku Kogyo Kabushiki Kaisha (Seikagaku Corporation), Tokyo, Japan

Filed Sep. 28, 1994, Ser. No. 313,899

Claims priority, application Japan, Sep. 30, 1993, 5-265479

The portion of the term of this patent subsequent to Jan. 3, 2015, has been disclaimed.

Int. Cl.⁶ C12Q *1/00;1/34;1/56;* **G01N** *33/53*

U.S. Cl. 435—4 **19 Claims**

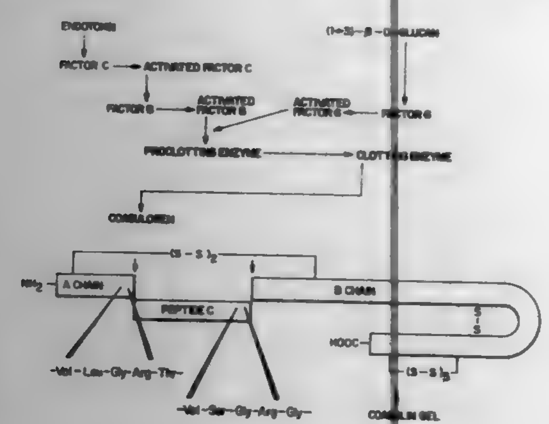

1. A reagent for endotoxin-specific assay which comprises a limulus amebocyte lysate reagent and an alkylglucoside.

5,702,883

METHODS FOR DETECTION OF MUTAGENS USING LUMINESCENCE GENE

Takao Imaeda, Kasugai, and Masana Hirai, Seto, both of Japan, assignors to Kabushiki Kaisha Toyota Chuo Kenkyusho, Aichi, Japan

Filed Oct. 21, 1994, Ser. No. 326,949

Claims priority, application Japan, Oct. 22, 1993, 5-264894; Feb. 15, 1994, 6-018452; Sep. 26, 1994, 6-229659

Int. Cl.⁶ C12Q *1/68;1/66;* **C07H** *21/04*

U.S. Cl. 435—4 **3 Claims**

1. A method for identifying a mutagenic substance, comprising the steps of: culturing Escherichia or Salmonella transformed with recombinant DNA comprising (i) an scherichia or Salmonella SOS gene and (ii) a gene encoding luciferase isolated from *Photobacterium phosphoreum, Photobacterium leiognathi, Vibrio splendidus, Vibrio cholerae, Photinus pyralis, Vibrio harveyi* or *Vibrio fischeria;*

wherein said gene encoding luciferase is positioned downstream of said SOS gene such that when said SOS gene is expressed, then said gene encoding luciferase is also expressed;

contacting said culture with a substance to be tested wherein said Escherichia or Salmonella in said culture is provided with a luciferase substrate; and

determining whether said substance is mutagenic by measuring the amount of luminescence in said culture.

5,702,884

WHOLE BLOOD SAMPLE PREPARATION FOR POLYMERASE CHAIN REACTION USING AMMONIUM CHLORIDE AND A CARBOXYLIC ACID OR METAL CARBOXYLATE FOR SELECTIVE RED BLOOD CELL LYSIS

Tobias E. Ekeze, Brockport, and JoAnne Hansen Kerschner, Rochester, both of N.Y., assignors to Johnson & Johnson Clinical Diagnostics, Inc., Rochester, N.Y.

Filed Mar. 12, 1996, Ser. No. 615,848

Int. Cl.⁶ C12Q *1/70;* **C12P** *19/34;* **C07H** *21/04*

U.S. Cl. 435—5 **21 Claims**

1. A method for the selective preparation of leucocytes comprising:

A) mixing a whole blood sample with an erythrocyte lysing solution comprising between 50 mM and 100 mM of ammonium chloride and between about 0.001 weight percent to about 0.1 weight percent of a monocarboxylic acid or salt thereof selected from the group consisting of acetic acid, monosubstituted acetic acid, disubstituted acetic acid, and trisubstituted acetic acid, and wherein said lysing solution has a pH of between 6 and 8,

B) centrifuging the resulting mixture to form a pellet of leucocytes from said whole blood sample,

C) after removing the supernatant, washing said leucocyte pellet in a fresh sample of said lysing solution, and

D) centrifuging and isolating said leucocyte pellet, provided that steps A) through D) are carried out within about 20 minutes.

5,702,885

METHOD FOR HLA TYPING

Lee Ann Baxter-Lowe, New Berlin, and Jack A. Gorski, Mukwonago, both of Wis., assignors to The Blood Center Research Foundation, Inc., Milwaukee, Wis.

Continuation of Ser. No. 544,218, Jun. 27, 1990, abandoned. This application Apr. 8, 1993, Ser. No. 57,957

Int. Cl.⁶ C12Q *1/68;* **C12P** *19/34;* **C07H** *21/04*

U.S. Cl. 435—6 **8 Claims**

1. An oligonucleotide probe consisting of:

an oligonucleotide sequence which undergoes sequence-specific hybridization with an HLA-DR beta consensus sequence at positions 61–64 characterized by the sequence consisting of 5'-GGAACAGCCAGA, and

a labelling substance other than a nucleotide sequence, which labelling substance facilitates detection of the probe.

5,702,886

CHROMOSOME 18Q LOSS AND PROGNOSIS IN COLORECTAL CANCER

Bert Vogelstein; Kenneth W. Kinzler, both of Baltimore, and Stanley Hamilton, Lutherville, all of Md., assignors to The Johns Hopkins University, Baltimore, Md.

Filed Oct. 5, 1994, Ser. No. 318,241

Int. Cl.⁶ C12Q *1/68;* **C12P** *19/34;* **C07H** *21/02;21/04*

U.S. Cl. 435—6 **1 Claim**

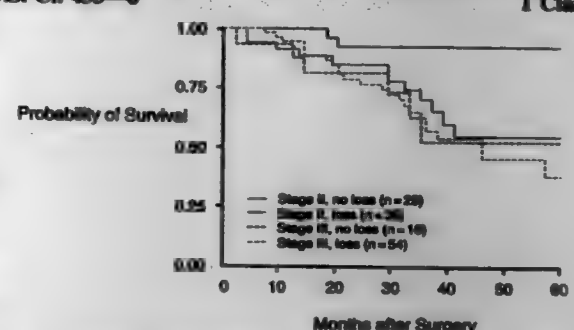

1. A method of determining prognosis of a patient having a TNM stage II colorectal cancer, consisting of the steps of:

determining the presence or absence of two or more polymorphic genetic markers on chromosomes 18q in tumor tissue of the patient;

determining the presence or absence of said two or more polymorphic genetic markers on chromosome 18q in non-neoplastic tissue of the patient; a polymorphic marker which is absent in said tumor tissue but present in said non-neoplastic tissue, indicating a somatic loss of markers on chromosome 18q; and

ascertaining a predicted survival rate for the patient by applying survival outcome data obtained from a population of patients consisting of TNM stage II colorectat cancer patients in which somatic loss of polymorphic markers on chromosome 18q has been measured and used to divide the population of patients into two groups, wherein those with a somatic loss of a polymorphic marker on chromosome 18q are in a first group and those with no somatic loss of a polymorphic on chromosome 18q are in a second group, wherein the survival rate of the first group is provided to the patient if the patient is determined to have a somatic loss of a polymorphic marker and the survival rate of the second group is provided to the patient if the patient is determined to have no somatic loss of a polymorphic marker.

5,702,887

LONG EMISSION WAVELENGTH CHEMILUMINESCENT COMPOUNDS AND THEIR USE IN TEST ASSAYS

Say-Jong Law, Westwood; Qingping Jiang, Norwood, both of Mass.; Walter Fischer, Reinach, Switzerland; John T. Unger, Medfield, and Elizabeth K. Krodel, Arlington, both of Mass., assignors to Chiron Diagnostics Corporation, E. Walpole, Mass.

Division of Ser. No. 35,130, Mar. 19, 1993, Pat. No. 5,395,752. This application Nov. 14, 1994, Ser. No. 340,093

Int. Cl.⁶ C12Q *1/68;* **G01N** *33/53;* **C09K** *11/00;* **C07D** *221/18*

U.S. Cl. 435—6 **21 Claims**

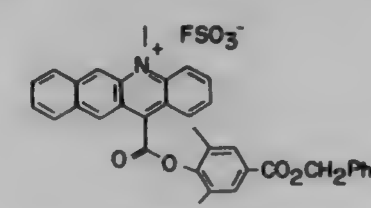

LEAE-Bz

1. A chemiluminescent compound of the formula:

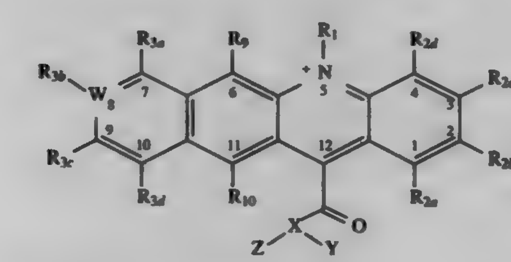

where W is carbon;

alternatively C_7, W, C_9 or C_{10} is replaced with —N═;

or alternatively W is omitted and C_7 is connected to C_9 end optionally C_7, C_9 or C_{10} is replaced with —O—, —S—, —NH— or —NR—;

R_{2a}, R_{2b}, R_{2c}, R_{2d}, R_{3a}, R_{3b}, R_{3c}, R_{3d}, R_9 and R_{10} are identical or different groups selected from hydrogen, substituted aryl, unsubstituted aryl, halide, amino, hydroxyl, nitro, sulfonate, —R, —CN, —COOH, —SCN, —OR, —SR, —SSR, —C(O)R, —C(O)OR, —C(O)NHR, or NHC(O)R;

R_{2c} and R_{2b} are optionally a fused aromatic ring with or without heteroatoms;

A^- is a counter ion;

R_1 is alkyl, alkenyl, alkynyl, or aralkyl, optionally comprising up to 20 heteroatoms;

Y is a branched or straight chained. halogenated or unhalogenated, alkyl optionally comprising up to 20 carbon atoms, or a polysubstituted aryl moiety of the formula:

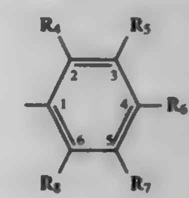

R_4 and R_8 are alkyl, alkenyl, alkynyl, alkoxyl, alkylthiol or amido,

R_5 and R_7 are identical or different groups selected from hydrogen, substituted aryl, unsubstituted aryl, halide, amino, hydroxyl, nitro, sulfonate, —R, —CN, —COOH, —SCN, —OR, —SR, —SSR, —C(O)R, —C(O)OR, —C(O)NHR, or NHC(O)R;

R_6=—R_{11}—R_{12},

where R_{11} is not required but optionally is a branched or straight-chained alkyl, or a substituted or unsubstituted aryl or aralkyl containing optionally up to 20 heteroatoms;

and R_{12} is a leaving group or an electrophilic functional group attached with a leaving group or —Q—R—Nu, —Q—R(I)$_n$Nu, —Q—Nu, —R—Nu or Nu, where n is a number of at least 1, Nu is a nucleophilic group, Q is a functional linkage, I is an ionic or ionizable group;

R_5 and R_6, and R_6 and R_7 are interchangeable;

R is alkyl, alkenyl, alkynyl, aryl or aralkyl containing optionally up to 20 heteroatoms; and

X is a heteroatom selected from nitrogen, oxygen or sulfur, such that when X is oxygen or sulfur Z is omitted, when X is nitrogen Z is —SO_2—Y', and Y' is equal to Y, where the substituents to Y and Y' do not have to be the same;

wherein said compound, upon chemical treatment, emits blue-green, green, yellow, orange or red-orange light.

5,702,888

PROCESS FOR THE DETECTION OF NUCLEIC ACIDS

Hans-Joachim Höltke, Tutzing; Rudolf Seibl, Penzburg; Gudrun Schmitz, Bernried; Hans Robert Schöler, Göttingen; Christoph Kessler, München, and Ralf Mattes, Stuttgart, all of Germany, assignors to Boehringer Mannheim GmbH, Mannheim, Germany

Continuation of Ser. No. 108,439, Aug. 18, 1993, abandoned, which is a continuation of Ser. No. 415,307, Jan. 9, 1990, Pat. No. 5,344,757. This application Jan. 11, 1995, Ser. No. 371,320

Claims priority, application Germany, Jan. 12, 1988, 38 00 642.1; Apr. 20, 1988, 38 13 278.8

Int. Cl.⁶ C12Q *1/68;* **C07H** *21/04*

U.S. Cl. 435—6 **35 Claims**

1. Method for detection of a first nucleic acid sequence comprising contacting said sequence with a complementary nucleic acid probe under conditions favoring hybridization between said sequence and said probe, said probe characterized as a second nucleic acid sequence having bound thereto at least one steroid hapten, said steroid hapten being bound to said second nucleic acid sequence to a position thereon which does not participate in formation of hydrogen bonds with said first sequence via a bridge of at least 4 atoms length, contacting hybridized probe with a

labelled antibody which specifically binds to said steroid hapten, and detecting said labelled antibody to detect said first nucleic acid sequence.

5,702,889
NUCLEIC ACID PROBES FOR THE DETECTION AND IDENTIFICATION OF FUNGI
Gurpreet S. Sandhu, and Bruce C. Kline, both of Rochester, Minn., assignors to Chiron Diagnostics Corporation, Walpole, Mass.
Filed Jan. 13, 1995, Ser. No. 373,127
Int. Cl.[6] C12Q *1/68;* **C12P** *19/34;* **C12N** *1/00;* **C07H** *21/04*
U.S. Cl. 435—6 **29 Claims**

1. A method of determining whether one or more fungal species selected from the group of fungal species consisting of *Aspergillus fumigatus, Blastomyces dermatitidis, Candida albicans, Coccidioides immitis, Cryptococcus neoformans, Histoplasma capsulatum, Aspergillus glaucus, Aspergillus niger, Aspergillus terreus, Candida glabrata, Candida quilliermondii, Candida kefyr, Candida krusei, Candida lusitaniae, Candida parapsilosis, Candida tropicalis, Pseudallescheria boydii, Aspergillus flavus* and *Sporothrix schenckii* is present in a sample of fungi, said method comprising the following steps:

a) extracting nucleic acid material from fungi contained in said sample;
b) adding two known oligonucleotide primers, one of said primers being (SEQ ID NO: 1) or (SEQ ID NO: 2), said primers bracketing a hypervariable region on the 28S rDNA or rRNA present in the fungal species of said group;
c) amplifying the sequence between said primers; and
d) using one or more labeled probes directed to a portion of the hypervariable region bracketed by said primers, each said labeled probe being specific for one of said fungal species from said group, to determine whether said fungal species identified by each said labeled probe is present in said sample.

5,702,890
INHIBITORS OF ALTERNATIVE ALLELES OF GENES AS A BASIS FOR CANCER THERAPEUTIC AGENTS
David E. Housman, Newton, Mass., assignor to K.O. Technology, Inc., Cambridge, Mass.
PCT No. PCT/US94/08473, § 371 Date Apr. 4, 1995, § 102(e) Date Apr. 4, 1995, PCT Pub. No. WO95/03335, PCT Pub. Date Feb. 2, 1995
Continuation-in-part of Ser. No. 95,597, Jul. 26, 1993, abandoned. This PCT application Jul. 26, 1994, Ser. No. 379,680
Int. Cl.[6] C12Q *1/68;* **C07K** *2/00;16/00;* **C07H** *21/04*
U.S. Cl. 435—6 **24 Claims**

1. A method for identifying an inhibitor specific for an allele of a gene essential for cell viability or growth, wherein said gene is subject to loss of heterozygosity in a cancer, said method comprising the steps of:

(a) determining at least two alleles of said gene;
(b) testing a potential allele specific inhibitor to determine whether said potential allele specific inhibitor inhibits expression of at least one but less than all of said alleles or reduces the level of activity of a product of at least one but less than all of said alleles;

wherein inhibition of expression of at least one but less than all of said alleles or reduction of the level of activity of a product of at least one but less than all of said alleles is indicative that said potential inhibitor is an allele specific inhibitor.

5,702,891
HAV PROBES FOR USE IN SOLUTION PHASE SANDWICH HYBRIDIZATION AND ASSAYS FOR DETECTING THE PRESENCE OF HAV
Janice A. Kolberg, Hercules, and Michael S. Urdea, Alamo, both of Calif., assignors to Chiron Corporation, Emeryville, Calif.
Continuation of Ser. No. 813,589, Dec. 23, 1991, abandoned. This application Apr. 5, 1995, Ser. No. 417,476
Int. Cl.[6] C12Q *1/68;* **C07H** *21/02;21/04*
U.S. Cl. 435—6 **20 Claims**

15. A solution sandwich hybridization assay for detecting the presence of HAV in a sample, comprising

(a) contacting the sample with (i) amplifier probes comprising the set of synthetic oligonucleotides of claim 7 and (ii) a set of capture probe oligonucleotides wherein there is a molar excess of amplifier probes and of capture probes over analyte nucleic acid in the sample, wherein said set of capture probe oligonucleotides comprises at least two different oligonucleotides each of which consists of
 a first segment having a minimum length of 25 nucleotides and a maximum length of 100 nucleotides which segment is at least 90% homologous to a segment of HAV nucleic acid, wherein said first segment comprises a nucleotide sequence selected from the group consisting of SEQ ID NOS: 28–37; and
 a second segment consisting of a nucleotide sequence which is at least 90% homologous to an oligonucleotide bound to a solid phase wherein said second segment is not complementary to HAV nucleic acid;
 and optionally one or more noncomplementary segments each consisting of a nucleotide sequence that is not complementary to HAV nucleic acid;
(b) contacting the product of step (a) with said oligonucleotide bound to the solid phase;
(c) thereafter separating materials not bound to the solid phase;
(d) contacting the bound product of step (c) with a nucleic acid multimer, said multimer comprising at least one oligonucleotide segment that is at least 90% homologous to the second segment of the amplifier probe polynucleotide and a multiplicity of second oligonucleotide segments that are at least 90% homologous to a labeled oligonucleotide;
(e) removing unbound multimer;
(f) contacting the solid phase complex product of step (e) with the labeled oligonucleotide;
(g) removing unbound labeled oligonucleotide; and
(h) detecting the presence of label in the solid phase complex product of step (g) and, thereby, detecting the presence of virus in the sample.

5,702,892
PHAGE-DISPLAY OF IMMUNOGLOBULIN HEAVY CHAIN LIBRARIES
Mary Jo Mulligan-Kehoe, Springfield, Va., assignor to The United States of America as represented by the Department of Health and Human Services, Washington, D.C.
Filed May 9, 1995, Ser. No. 437,815
Int. Cl.[6] C12Q *1/68;* **C12N** *15/13;15/6;15/70*
U.S. Cl. 435—6 **4 Claims**

1. A phage-display library, comprising:
a plurality of recombinant phage, each of said recombinant phage including an M13-derived expression vector having incorporated therein a polynucleotide coding for a polypeptide a protein encompassing a region spanning from upstream of an immunoglobulin heavy chain CDRI to a position downstream of CDRIII, wherein a DNA sequence encoding either CDRI or CDRIII is replaced by a randomly ordered DNA sequence, and wherein a fusion protein comprising the polypeptide encoded by said polynucleotide is expressed in the absence of an immunoglobulin light chain protein or portions thereof on an outer surface of recombinant phage of the library.

5,702,893
HYDROPHOBIC NUCLEIC ACID PROBE
Michael S. Urdea, Alamo, and Thomas Horn, Berkeley, both of Calif., assignors to Chiron Corporation, Emeryville, Calif.
Division of Ser. No. 384,630, Feb. 6, 1995, Pat. No. 5,552,280, which is a continuation of Ser. No. 64,357, May 18, 1993, abandoned, which is a continuation of Ser. No. 855,448, Mar. 19, 1992, abandoned, which is a continuation of Ser. No. 374,462, Jun. 30, 1989, abandoned. This application May 15, 1995, Ser. No. 441,192
Int. Cl.[6] C12Q *1/68;* **C07H** *21/02;21/04*
U.S. Cl. 435—6 **3 Claims**

1. A method for binding a target polynucleotide in a sample to an unsubstituted substrate, said method comprising:
 providing an assay reagent comprising a substrate having bound noncovalently thereto a polynucleotide capture probe having a hydrophobic moiety at an end wherein said capture probe is bound to said unsubstituted substrate through said hydrophobic moiety,
 contacting said assay reagent with said sample under conditions which permit hybridization between said capture probe and said target polynucleotide, thereby binding the target polynucleotide to the unsubstituted substrate.

5,702,894
METHODS OF ANALYSIS AND MANIPULATING OF DNA UTILIZING MISMATCH REPAIR SYSTEMS
Paul L. Modrich, Chapel Hill, N.C.; Shin-San Su, Newton, Mass.; Karin G. Au, Durham, N.C.; Robert S. Lahue, Northboro; Deani Lee Cooper, Watertown, both of Mass., and Leroy Worth, Jr., Durham, N.C., assignors to Duke University, Durham, N.C.
Continuation of Ser. No. 145,837, Nov. 1, 1993, Pat. No. 5,556,750, which is a continuation-in-part of Ser. No. 2,529, Jan. 11, 1993, abandoned, which is a continuation of Ser. No. 350,983, May 12, 1989, abandoned. This application Jun. 2, 1995, Ser. No. 460,663
Int. Cl.[6] C12Q *1/68;* **C12P** *19/34;* **C07H** *21/02;21/04*
U.S. Cl. 435—6 **8 Claims**

1. A method for removing DNA molecules containing one or more base pair mismatches in a population of DNA duplexes that have been produced by enzymatic amplification, potentially containing one or more base pair mismatches, comprising the steps of:
 contacting said population of DNA duplexes with a mismatch repair system under conditions such that one or more components of said mismatch repair system form a specific complex with a base pair mismatch contained in a DNA duplex having a base pair mismatch, and
 removing said DNA duplex containing said complex or the product of said complex from the population of duplex molecules without the use of an additional agent capable of enzymatic digestion of said DNA duplexes which is not a component of said mismatch repair system, prior to said removal.

5,702,895
METHOD AND KIT FOR DETECTING METHICILLIN-RESISTANT ***STAPHYLOCOCCUS AUREUS***
Hironari Matsunaga; Kenichi Tsukumo; Shinji Wakisaka, and Akio Yamane, all of Hiroshima, Japan, assignors to Wakunaga Seiyaku Kabushiki Kaisha, Osaka, Japan
Filed Jan. 16, 1996, Ser. No. 586,274
Claims priority, application Japan, Jan. 19, 1995, 7-006390
Int. Cl.[6] C12Q *1/68;* **C12P** *19/34;* **C07H** *21/04;* **C12N** *15/00*
U.S. Cl. 435—6 **11 Claims**

1. A method for detecting methicillin-resistant *Staphylococcus aureus* (MRSA) from a DNA specimen, which comprises:
a) obtaining an isolated DNA specimen wherein said DNA specimen is suspected of containing mecA and spa gene sequences;
b) combining said DNA specimen with four primers wherein said primers have the nucleotide residue sequence set forth in SEQ ID NO: 1, SEQ ID NO:2, SEQ ID NO:3, and SEQ ID NO:4;
c) subjecting the combined DNA specimen and four primers to conditions which permit specific amplification of the mecA and spa gene sequences;
d) detecting the presence of the amplified nucleic acid sequences wherein the presence of both amplification products is indicative of MRSA.

5,702,896
METHODS FOR IMPROVING THE SENSITIVITY OF HYBRIDIZATION ASSAYS
Mark L. Collins, Holden; Cecile Blomquist, Roslindale; Massimo Lombardo, Framingham, and John Eldredge, South Dennis, all of Mass., assignors to Amoco Corporation, Chicago, Ill.
Continuation of Ser. No. 147,986, Nov. 3, 1993, abandoned, which is a continuation of Ser. No. 661,917, Feb. 27, 1991, abandoned. This application Feb. 7, 1996, Ser. No. 598,142
Int. Cl.[6] C12Q *1/68*
U.S. Cl. 435—6 **2 Claims**

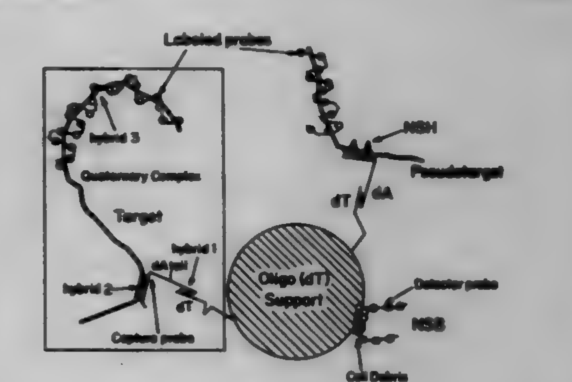

1. A method for increasing the signal to noise ratio in a capture/detection hybridization assay, comprising:
a) providing a quaternary complex comprising:
 i) a target nucleic acid having a first and a second region;
 ii) a capture probe comprising a first region which is a homopolynucleotide (dA) tail, and a second region which is perfectly complementary to the first region of the target nucleic acid, the second region having a length of from 24 to 40 nucleotides;
 iii) a detection probe which is complementary to the second region of the target nucleic acid; and
 iv) a homooligonucleotide of (dT) bound to a solid support, the homooligonucleotide of (dT) having a length of from 10 to 14 nucleotides; and
b) washing the complex of step a) with a solution comprising a tetramethylammonium salt, having a molarity of about 3.0, at a temperature of from 60° C. to 70° C. to elute non-specifically bound detector probe.

5,702,897

INTERACTION OF PROTEINS INVOLVED IN A CELL DEATH PATHWAY

John C. Reed, Carlsbad, and Takaaki Sato, San Diego, both of Calif., assignors to The Burnham Institute, La Jolla, Calif.

Continuation of Ser. No. 226,876, Apr. 13, 1994, abandoned. This application Feb. 20, 1996, Ser. No. 607,269

Int. Cl.^{6} C12Q *1/68*

U.S. Cl. 435—6 **5 Claims**

1. A method of detecting a protein involved in a cell death pathway, comprising the steps of:

a. obtaining a cell that expresses an exogenous protein involved in a cell death pathway, wherein expression of said exogenous protein results in the death of said cell;

b. expressing in said cell a second protein that is suspected of being involved in a cell death pathway; and

c. detecting the survival of said cell, wherein said survival indicates that said second protein is involved in a cell death pathway.

5,702,898

PROCEDURE FOR NORMALIZATION OF CDNA LIBRARIES

Maria DeFatima Bonaldo, and Marcelo Bento Soares, both of New York, N.Y., assignors to The Trustees of Columbia University in The City of New York, New York, N.Y.

Filed Jun. 6, 1995, Ser. No. 465,857

Int. Cl.^{6} C12Q *1/68;* **C12P** *19/34;* **C12N** *15/00;* **C07H** *21/00*

U.S. Cl. 435—6 **16 Claims**

1. A method to normalize a cDNA library constructed in a vector capable of being converted to single-stranded circles and capable of producing complementary nucleic acid molecules to the single-stranded circles comprising:

(a) converting the cDNA library to single-stranded circles;

(b) generating antisense RNA in vitro to the single-stranded circles;

(c) hybridizing the single-stranded circles converted in step (a) with antisense RNA of step (b) to produce partial duplexes to an appropriate Cot; and

(d) purifying the unhybridized single-stranded circles from the hybridized single-stranded circles, thereby generating a normalized cDNA library.

5,702,899

Patent Not Issued For This Number

5,702,900

Patent Not Issued For This Number

5,702,901

DIAGNOSTIC COMPOSITIONS, ELEMENTS, METHODS AND TEST KITS FOR AMPLIFICATION AND DETECTION OF TWO OR MORE DNA'S USING PRIMERS HAVING MATCHED MELTING TEMPERATURES

Thomas J. Cummins, Rochester; Susan Melissa Atwood, Rush; Lynn Bergmeyer, Rochester; John Bruce Findlay, Rochester; John W.H. Sutherland, Rochester, and JoAnne H. Kerschner, Rochester, all of N.Y., assignors to Clinical Diagnostic Systems, Rochester, N.Y.

Division of Ser. No. 62,023, May 14, 1993. This application Jun. 8, 1995, Ser. No. 495,739

Int. Cl.^{6} C12Q *1/68;* **C12P** *19/34*

U.S. Cl. 435—6 **14 Claims**

1. An aqueous composition buffered to a pH of from about 7 to about 9, and comprising:

a) first and second primers which are specific to and hybridizable with, respectively, first and second nucleic acid sequences which are in opposing strands of a first target DNA and which are separated from each other along said opposing strands by from 90 to 400 nucleotides, and

b) third and fourth primers which are specific to and hybridizable with, respectively, third and fourth nucleic acid sequences which are in opposing strands of a second target DNA which is the same as or different from said first target DNA, said third and fourth nucleic acid sequences being different from said first and second nucleic acid sequences and being separated from each other along said opposing strands by from 90 to 400 nucleotides,

each of said first, second, third and fourth primers having a T_m within the range of from about 65° to about 74° C., all of said primer T_m's being within about 5° C. of each other, said first and second primers having nucleotide lengths which differ from each other by no more than 5 nucleotides, and said third and fourth primers having nucleotide lengths which differ from each other by no more than 5 nucleotides.

5,702,902

METHODS FOR THE DIAGNOSIS OF BODY WEIGHT DISORDERS INCLUDING OBESITY

Louis Anthony Tartaglia, Watertown, Mass., assignor to Millennium Pharmaceuticals, Inc., Cambridge, Mass.

Continuation-in-part of Ser. No. 470,868, Jun. 6, 1995, which is a continuation-in-part of Ser. No. 294,522, Aug. 23, 1994. This application Aug. 23, 1995, Ser. No. 518,878

Int. Cl.^{6} C12Q *1/68;* **C07H** *21/02;21/04*

U.S. Cl. 435—6 **11 Claims**

1. A method for diagnosing body weight disorders, comprising detecting, in a patient sample, the level of:

(a) an F49 (SEQ ID NO.:34), C5 (SEQ ID NO.:36) or human C5 (SEQ ID NO.:38) gene transcript;

(b) a gene transcript containing a nucleotide sequence present in a cDNA within the following *E. coli* clone as deposited with the NRRL: famf049a (NRRL Accession No. B-21318), or fahs005a (NRRL Accession No. B-21320);

(c) a gene transcript containing a nucleotide sequence which hybridizes under stringent conditions to the complement of the gene transcript of (a) or (b);

(d) a gene transcript containing a nucleotide sequence which encodes an amino acid sequence depicted in SEQ ID NO.:35, SEQ ID NO.:37, SEQ ID NO.:56 or SEQ ID NO.:51;

(e) a gene transcript containing a nucleotide sequence which encodes an amino acid sequence encoded by a cDNA within the following *E. coli* clone as deposited with the NRRL: famf049a (NRRL Accession No. B-21318), or fahs005a (NRRL Accession No. B-21320);

(f) a gene product containing an amino acid sequence encoded by an F49 (SEQ ID NO.:34), C5 (SEQ ID NO.:36) or human CS (SEQ ID NO.:38) gene transcript;

(g) a gene product encoded by a nucleotide sequence present in a cDNA within the following *E. coli* clone as deposited with the NRRL: famf049a (NRRL Accession No. B-21318), or fahs005a (NRRL Accession No. B-21320); or

(h) a gene product containing an amino acid sequence depicted in SEQ ID NO.:35, SEQ ID NO.:37, SEQ ID NO.:56 or SEQ ID NO.:51,

so that if a differential level in the patient sample is detected relative to a corresponding non-body weight disorder sample, a body weight disorder is diagnosed.

5,702,903

METHOD AND CELLS FOR DRUG IDENTIFICATION

Kenneth W. Kinzler, and Bert Vogelstein, both of Baltimore, Md., assignors to The Johns Hopkins Unviersity, Baltimore, Md.

Division of Ser. No. 245,500, May 18, 1994, Pat. No. 5,550,023, which is a division of Ser. No. 44,619, Apr. 7, 1993, Pat. No. 5,420,263, which is a continuation-in-part of Ser. No. 903,103, Jun. 23, 1992, Pat. No. 5,411,860, which is a continuation-in-part of Ser. No. 867,840, Apr. 7, 1992, abandoned. This application Nov. 13, 1995, Ser. No. 557,393

Int. Cl.^{6} C12Q *1/68;* **C12N** *1/19*

U.S. Cl. 435—6 **4 Claims**

1. A method for identifying compounds which interfere with the binding of human MDM2 to human p53, comprising the steps of:

providing a cell which:

(a) expresses an MDM2 polypeptide and a p53 polypeptide, wherein each of said polypeptides contains a sufficient portion of p53 or MDM2 proteins to bind to the other polypeptide;

(b) contains a reporter construct whose expression is enhanced in the presence of the p53 polypeptide, said reporter construct comprising:

(i) a DNA sequence which binds the p53 polypeptide;

(ii) a promoter; and

(iii) a reporter gene under the control of said promoter; and

(c) expresses sufficient of said MDM2 polypeptide to inhibit expression of said reporter gene;

contacting said cell with a compound to be tested for its capacity to inhibit binding of MDM2 and p53;

determining the amount of expression of the reporter gene in the presence of said compound; wherein a compound which increases expression of the reporter gene is identified as a compound which inhibits the binding of MDM2 and p53.

5,702,904

IMMUNOASSAY FOR IDENTIFYING ALCOHOLICS AND MONITORING ALCOHOL CONSUMPTION

Samar Makhlouf; Mark L. Pankow, both of Chicago; Byron E. Anderson, Norton Grove, all of Ill., and Pamela Bean, Los Angeles, Calif., assignors to Immtech International, Inc., and Northwestern Univeristy, both of Evanston, Ill.

Continuation of Ser. No. 765,169, Sep. 25, 1991, abandoned. This application Jul. 8, 1994, Ser. No. 272,852

Int. Cl.^{6} G01N *33/53*

U.S. Cl. 435—7.1 **28 Claims**

25. An immunoassay for determining a transferrin homolog found in an alcoholic comprising:

providing a sample of a body fluid containing transferrin;

contacting the sample with an antibody which reacts selectively with said transferrin homolog wherein said homolog lacks an amount of carbohydrate chain normally attached to Asn 413 and/or Asn 611 in a transferrin molecule, said amount sufficient to expose an epitope within about 14 amino acid residues of Asn 413 and/or Asn 611 that is not exposed in non-alcoholic transferrin and is not selectively bound by the antibody in a non-alcoholic, wherein said alcoholic is an individual who ingests 60 grams of more of ethanol per day for a period of one week or more, and said non-alcoholic is an individual who does not ingest 60 grams or more of ethanol per day for a period of one week or more;

determining whether any selective binding complexes are formed between the antibody and any said transferrin homolog in the sample; and

determining the presence and quantity of the transferrin homolog in the sample from the amount of selective binding complexes formed.

5,702,905

MONOCLONAL ANTIBODY TO HUMAN VENTRICULAR MYOSIN LIGHT CHAINS

Miyoko Takahashi, North York, and George Jackowski, Inglewood, both of Canada, assignors to Spectral Diagnostics, Toronto, Canada

Filed Sep. 28, 1994, Ser. No. 314,202

Int. Cl.^{6} G01N *33/53*

U.S. Cl. 435—7.1 **3 Claims**

1. A hybridoma cell line 39-15, deposited with American Type Culture Collection under Accession Number HB 11709.

5,702,906

ANTIBODIES TO NEUROTROPHIC FACTOR-4 (NT-4)

Arnon Rosenthal, Pacifica, Calif., assignor to Genentech, Inc., South San Francisco, Calif.

Division of Ser. No. 426,419, Apr. 19, 1995, which is a continuation of Ser. No. 30,013, Mar. 22, 1993, abandoned, which is a continuation-in-part of Ser. No. 648,482, Jan. 31, 1991, abandoned, which is a continuation-in-part of Ser. No. 587,707, Sep. 25, 1990, Pat. No. 5,364,769. This application May 26, 1995, Ser. No. 451,947

Int. Cl.^{6} G01N *33/53;* **C12N** *5/12;* **C07K** *16/22;1/16*

U.S. Cl. 435—7.1 **10 Claims**

1. An antibody that binds neurotrophic factor-4 (NT-4) but that does mot bind NGF, BDNF, or NT-3.

5,702,907

ANTIBODIES TO THE HEPATOCELLULAR CARCINOMA ONCOGENE AND IMMUNOASSAYS USING THE SAME

Stringner S. Yang, Bethesda, Md., assignor to The United States of America as represented by the Secretary, Dept. of Health and Human Services, Washington, D.C.

Division of Ser. No. 324,445, Oct. 18, 1994, which is a continuation of Ser. No. 575,524, Aug. 31, 1990, abandoned, and a continuation-in-part of Ser. No. 774,156, Oct. 15, 1991, Pat. No. 5,403,926, which is a continuation of Ser. No. 451,953, Dec. 19, 1989, abandoned. This application Jun. 6, 1995, Ser. No. 471,540

Int. Cl.^{6} G01N *33/53;* **C07K** *1/00;16/00*

U.S. Cl. 435—7.1 **6 Claims**

1. Antibodies specific for a protein having the amino acid sequence as shown in FIG. 1 or a naturally occurring allelic variation of said sequence.

5,702,908

INTERRUPTION OF BINDING OF MDM2 AND P53 PROTEIN AND THERAPEUTIC APPLICATION THEREOF

Steven Michael Picksley, Angus, and David Philip Lane, Fife, both of Scotland, assignors to University of Dundee, Dundee, Scotland

Filed Jul. 20, 1994, Ser. No. 277,660

Int. Cl.^{6} G01N *33/53*

U.S. Cl. 435—7.8 **5 Claims**

1. A method of identifying a compound which interferes with the binding of MDM2 to human p53, said method comprising the steps of:

forming a mixture by combining a labeled first protein with a second protein, wherein one of the first protein or the second protein is MDM2 and the other is a fragment of human p53 consisting of 6 to 28 amino acids comprising the amino acid sequence TFSDLW (SEQ ID NO:2) or a peptide analogue thereof;

adding a test compound to the mixture; and

determining the quantity of the first protein which is bound to the second protein before and after said adding step, wherein

a decrease in the quantity of the first protein which is bound to the second protein after the adding step indicates that the test compound is a compound which interferes with the binding of MDM2 to human p53.

5,702,909
METHODS OF DETECTING COLLAGEN TYPE II DEGRADATION IN VIVO

David R. Eyre, Mercer Island, Wash., assignor to Washington Research Foundation, Seattle, Wash.

Continuation-in-part of Ser. No. 823,270, Jan. 16, 1992, Pat. No. 5,532,169, which is a division of Ser. No. 444,881, Dec. 1, 1989, Pat. No. 5,140,103, which is a continuation-in-part of Ser. No. 118,234, Nov. 6, 1987, Pat. No. 4,973,666. This application Jun. 7, 1995, Ser. No. 484,833

Int. Cl.[6] G01N *33/53*

U.S. Cl. 435—7.9 **5 Claims**

1. In a method of analyzing a body fluid sample for the presence of an analyte indicative of a physiological condition, comprising the steps of contacting the body fluid sample with an immunological binding partner which binds to the analyte, detecting binding of the immunological binding partner to the analyte, and correlating any detected binding to the physiological condition, the improvement comprising contacting the body fluid sample with an immunological binding partner which binds to

Phe-Asp-Glu-K-Ala-Gly-Gly
|
Phe-Asp-Glu-K-Ala-Gly-Gly
|
K

wherein

K
|
K
|
K

is hydroxylysyl pyridinoline or lysyl pyridinoline, and correlating any detected binding to degradation of type II collagen in vivo.

5,702,910
METHOD OF SANDWICH IMMUNOASSAY FOR N-PEPTIDE

Yoshito Numata, Yao; Hidehisa Asada, Ibaraki; Keiji Dohi; Takahiro Fukunaga, both of Osaka, and Yasushi Taniguchi, Takatsuki, all of Japan, assignors to Shionogi & Co., Ltd., Osaka, Japan

Filed Dec. 8, 1995, Ser. No. 569,461

Claims priority, application Japan, Dec. 9, 1994, 6-306453

Int. Cl.[6] G01N *33/53;33/543*

U.S. Cl. 435—7.94 **10 Claims**

1. A method for measuring γ-hANP(1–98) or a precursor thereof, comprising the steps of:

incubating a mixture containing a sample and a first monoclonal antibody which specifically binds the γ-hANP(1–98);

adding a labeled second monoclonal antibody which specifically binds the γ-hANP(1–98) to the mixture, followed by further incubation;

detecting a resulting antigen-antibody complex in the mixture; and

correlating the detected antigen-antibody complex with an amount of the γ-hANP(1–98),

wherein the first or second monoclonal antibody binds a portion of an amino acid sequence from the 43 position to the 67 position of the γ-hANP(1–98).

5,702,911
DIAGNOSTIC TEST COMPOSITION

Robert G. Whalen, Willington, Conn., assignor to Chek-Med Systems, Inc., Camp Hill, Pa.

Filed Aug. 15, 1996, Ser. No. 698,384

Int. Cl.[6] C12Q *1/58;1/28;1/04*

U.S. Cl. 435—12 **6 Claims**

1. An improved test composition for detecting *Helicobacter pylori* in a specimen comprising by weight:

a) an aqueous solution containing about 0.5% to about 6% hydrogen peroxide;

b) about 0.5% to about 2.0% urea;

c) about 0.001% to about 0.01% monobasic sodium phosphate;

d) about 0.01% to about 0.1% bromthymol blue indicator; and the remaining percent is water.

5,702,912
METHOD TO DETERMINE THE CONCENTRATION OF ANTICOAGULANTS

Hendrick Coenraad Hemker, Maastricht; Robert Johan Wagenvoord, Eysden, both of Netherlands, and Hans-Jurgen Kolde, Ottobrunn, Germany, assignors to Dade International Inc., Deerfield, Ill.

Continuation of Ser. No. 160,469, Dec. 1, 1993, abandoned, which is a continuation of Ser. No. 899,226, Jun. 16, 1992, abandoned, which is a continuation of Ser. No. 609,340, Nov. 5, 1990, abandoned. This application Nov. 30, 1995, Ser. No. 564,986

Int. Cl.[6] C12Q *1/56;* **G01N** *33/86*

U.S. Cl. 435—13 **13 Claims**

1. A method to determine a concentration of an anticoagulant in a sample as a function of thrombin formation in said sample comprising:

(a) combining said sample with an amount of clotting factor reagent comprising prothrombin wherein the amount of clotting factor reagent is in excess of an amount of clotting factor present in a normal sample and is sufficient to initiate thrombin formation in said sample;

(b) adding a sufficient amount of activator reagent to initiate coagulation;

(c) adding a sufficient amount of a thrombin substrate to detect thrombin formation;

(d) measuring thrombin formation; and

(e) determining the amount of said anticoagulant in said sample by correlating the thrombin formation in said sample with thrombin formation in samples containing known amounts of said anticoagulant.

5,702,913
CHROMGEN-REAGENT TEST SYSTEM

Philip A. Guadagno, Vidor, Tex., assignor to Helena Laboratories Corporation, Beaumont, Tex.

Continuation of Ser. No. 563,903, Dec. 21, 1983, abandoned. This application Jun. 12, 1989, Ser. No. 364,525

Int. Cl.[6] G01N *21/00;33/72;* **C12Q** *1/28;* **C12N** *9/99*

U.S. Cl. 435—28 **11 Claims**

1. An occult blood specimen test system including a sheet member carrying a first reagent which has a color change reaction in response to the presence of a second reagent and blood, and an indicator area defined as a portion of the sheet member for indicating the functionality of the system, said indicator area including a positive indicator region for indicating the functionality of said reagents and a negative indicator region for indicating if said first reagent has been improperly catalyzed, said positive indicator region including the first reagent and a catalyst for causing the color change reaction of the first reagent in response to the presence of the second reagent, said catalyst further characterized in not reacting to adverse environmental conditions in a manner similar to hemoglobin which adverse environmental conditions

would cause the first reagent to lose the ability to change color in the presence of blood and the second reagent.

5,702,914
USE OF REPORTER GENES FOR RETINOID RECEPTOR SCREENING ASSAYS HAVING NOVEL RETINOID-ASSOCIATED RESPONSE ELEMENTS

Ronald M. Evans, La Jolla, and Toshihiko Ogura, San Diego, both of Calif., assignors to The Salk Institute for Biological Studies, La Jolla, Calif.

Filed Dec. 21, 1994, Ser. No. 360,939

Int. Cl.[6] C12N *15/67;* **C12Q** *1/02*

U.S. Cl. 435—29 **24 Claims**

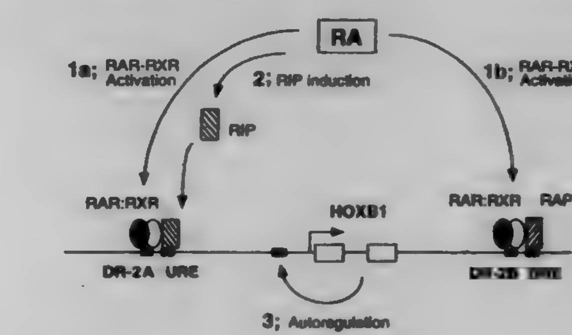

1. A bioassay for evaluating whether a compound is a functional ligand for a functional retinoid receptor protein, said bioassay comprising:

(a) culturing cells which contain:
functional retinoid receptor protein,
a protein selected from a retinoid-inducible protein (RIP) or a retinoid-activating protein (RAP), and
DNA comprising an enhanced-response-element operatively linked to an heterologous reporter gene;
wherein said culturing is conducted in the presence of at least one compound whose ability to function as a ligand for said functional retinoid receptor protein is sought to be determined; and

(b) assaying for evidence of transcription of said reporter gene in said cells;
wherein said enhanced-response-element is a RIP-associated response element or a RAP-associated response element,
wherein a RIP-associated response element is employed in cells which contain a RIP protein and a RAP-associated response element is employed in cells which contain a RAP protein,
wherein said RIP-associated response element comprises:
a RIP-binding-site, and
a direct repeat sequence to which said retinoid receptor binds;
wherein said RIP-binding-site has the nucleotide sequence of nucleotides 91–102 of SEQ ID NO:1,
wherein modifications can be made: to any single triplet selected from nucleotides 91–93, 97–99 or 100–102 of SEQ ID NO:1, or
to the triplet sequences of both nucleotides 91–93 and 97–99, provided that the resulting sequence remains a palindrome and retains RIP-binding activity;
wherein said RAP associated response element comprises:
a RAP-binding-site, and
a direct repeat sequence to which said retinoid receptor binds;
wherein said RAP-binding-site has the nucleotide sequence of nucleotides 101–116 of SEQ ID NO:2, or sequences of the same length which are at least 70% identical thereto, provided such sequences retain RAP-binding activity.

5,702,915
TOXICITY DETECTING BIOSENSOR SYSTEM

Shigeyuki Miyamoto, Tokyo, Japan, assignor to NEC Corporation, Tokyo, Japan

Continuation of Ser. No. 187,473, Jan. 28, 1994, abandoned. This application Oct. 12, 1995, Ser. No. 542,021

Claims priority, application Japan, Mar. 15, 1993, 5-053062

Int. Cl.[6] C12M *1/34;1/36;* **C12Q** *1/18;1/20*

U.S. Cl. 435—32 **17 Claims**

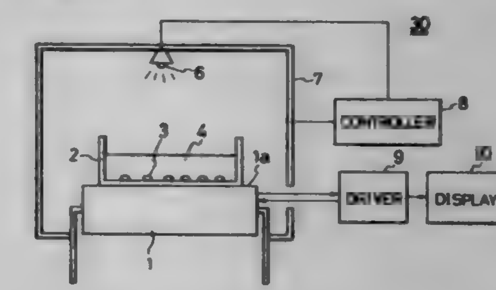

17. A method of detecting the toxicity of a sample comprising the steps of:
positioning a culture container on an upper surface of a light-receiving portion of a solid-state area image pickup element, a bottom surface of said culture container being formed of one of transparent plastics and transparent glass;
providing a cell and culture medium in said culture container;
providing a sample to be tested in said culture container so that the sample comes into contact with said cell;
radiating light over said cell with external light being interrupted so as not to enter said culture container, the strength of said light being controlled by a controller;
taking out data about said cell from said element; and
indicating said data on a display.

5,702,916
BIOLOGICAL CONTAINMENT

Soren Molin, Holte; Poul Kirketerp Andersson, Frederiksberg; Kenn Axo Gerdes, Virum, and Per Klemm, Frederiksberg, all of Denmark, assignors to GX Biosystems A/S, Copenhagen, Denmark

Continuation of Ser. No. 205,824, Mar. 4, 1994, abandoned, which is a continuation of Ser. No. 947,910, Sep. 21, 1992, abandoned, which is a continuation of Ser. No. 132,942, Nov. 6, 1987, abandoned, which is a continuation-in-part of Ser. No. 29,760, Feb. 13, 1987, abandoned, and Ser. No. 610,985, May 15, 1984, Pat. No. 4,760,022, said Ser. No. 947,910is a continuation-in-part of Ser. No. 406,880, Sep. 13, 1989, Pat. No. 5,545,541, which is a continuation of Ser. No. 29,760. This application May 25, 1995, Ser. No. 449,958

Claims priority, application Denmark, Mar. 26, 1986, 1455/86; Dec. 23, 1986, 6294/86

Int. Cl.[6] C12P *21/00;* **C12N** *1/21;15/63*

U.S. Cl. 435—69.1 **69 Claims**

45. A method of biologically containing bacterial cells growing in a first, controllable environment, which cells could escape to a second and physically distinct environment, which comprises:

a) providing in said cell a recombinant replicon, said replicon comprising a first gene, expressed under the control of a regulatable promoter which is functional in said cells, whose expression results in formation of a toxic product which has a toxic effect on said cells, said cells natively containing or being modified to contain a second gene whose product inhibits expression of said first gene, said inhibition being regulatable by an environmental factor, the level of said environmental factor in the second environment being such that said first gene is expressed and said toxic product is formed, whereby cells in the second environment which harbor said replicon are killed, and

b) manipulating the first environment such that the level of the environmental factor therein is such that expression of said

first gene is inhibited, whereby cells bearing said replicon are able to grow in said first environment but not in said second environment, the toxic effect being such that at least 99.9% of the cells are killed in said second environment, which but for said effect is an environment in which said cells can grow where said bacterial cells are selected from the group consisting of Enterobacteriaceae, Pseudomonadaceae, and Bacillaceae cells, where said first gene comprises a coding sequence which encodes a polypeptide having an amino acid sequence wherein at least about 60% of the residues are identical to or conservative modifications of the corresponding residues of the amino acid sequence of the R1 Hok and/or F Hok polypeptides and/or the polypeptide encoded by relB-orf3.

5,702,917

POLYNUCLEOTIDES ENCODING HUMAN ICAM-4

Patrick D. Kilgannon, Bothell, and W. Michael Gallatin, Mercer Island, both of Wash., assignors to ICOS Corporation, Bothell, Wash.

Continuation-in-part of Ser. No. 245,295, May 18, 1994, which is a continuation-in-part of Ser. No. 102,852, Aug. 5, 1993, abandoned, which is a continuation-in-part of Ser. No. 9,266, Jan. 22, 1993, abandoned, which is a continuation-in-part of Ser. No. 894,061, Jun. 5, 1992, abandoned, which is a continuation-in-part of Ser. No. 889,724, May 26, 1992, abandoned, which is a continuation-in-part of Ser. No. 827,689, Jan. 27, 1992, abandoned. This application Jun. 7, 1995, Ser. No. 481,130

Int. Cl.[6] C12N *15/12*

U.S. Cl. 435—69.1 **10 Claims**

2. A purified and isolated polynucleotide encoding the ICAM-4 amino acid sequence set out in SEQ ID NO: 28.

5,702,918

HIV-2 ENVELOPE POLYPEPTIDES

Wilhelm Bannwarth, Rheinfelden-Beuggen, Germany; Patrick Caspers, Oberwil, Switzerland; Stuart Le Grice, Basel, Switzerland, and Jan Mous, Giebenach, Switzerland, assignors to Roche Diagnostic Systems, Inc., Branchburg, N.J.

Continuation of Ser. No. 213,416, Mar. 15, 1994, which is a continuation of Ser. No. 895,977, Jun. 9, 1992, abandoned, which is a continuation of Ser. No. 268,322, Nov. 7, 1988, abandoned. This application May 5, 1995, Ser. No. 435,937

Claims priority, application Switzerland, Nov. 16, 1987, 4454/87

Int. Cl.[6] C12P *21/06;* **C12Q** *1/70;* **C07K** *1/00;14/00*

U.S. Cl. 435—69.3 **5 Claims**

1. A polypeptide having the amino acid sequence

SerAlaArgLeuAsnSerTrpGlyCysAlaPheArgGlnValCysHisThrThr
ValProTrpValAsnAspSerLeuAlaProAspTrpAspAsnMetThrTrpGln
GluTrpGluLysGlnValArgTyrLeuGluAlaAsnIleSerLysSerLeuGlu
GlnAlaGlnGly.

5,702,919

DNA ENCODING CANINE GRANULOCYTE MACROPHAGE COLONY STIMULATING FACTOR

Richard A. Nash, and Rainer Storb, both of Seattle, Wash., assignors to Fred Hutchinson Cancer Research Center, Seattle, Wash.

Continuation of Ser. No. 616,678, Nov. 21, 1990, abandoned. This application Jun. 14, 1994, Ser. No. 259,696

Int. Cl.[6] C12N *15/27;* **C07K** *14/535*

U.S. Cl. 435—69.5 **13 Claims**

1. An isolated DNA molecule, which encodes Amino Acid Sequence I (SEQ ID NO:1).

5,702,920

DNAS ENCODING HUMAN MACROPHAGE MIGRATION INHIBITION FACTOR RELATED PEPTIDES

Karel Gerrit Odink, Rheinfelden; Roger Clerc, Basel; Nico Cerletti, Bottmingen; Josef Brüggen, Riehen, all of Switzerland; Lajos Tarcsay, Grenzach-Wyhlen; Clemens Sorg, Münster, both of Germany, and Walter Wiesendanger, Münchenstein, Switzerland, assignors to Novartis Corporation, Summit, N.J.

Division of Ser. No. 230,664, Apr. 21, 1994, abandoned, which is a division of Ser. No. 617,485, Nov. 21, 1990, Pat. No. 5,350,687, which is a continuation of Ser. No. 104,744, Oct. 2, 1987, abandoned. This application Jul. 27, 1995, Ser. No. 508,142

Claims priority, application United Kingdom, Nov. 27, 1986, 8628358; Oct. 3, 1996, 8623850

Int. Cl.[6] C07K *14/52;* **C12N** *15/19*

U.S. Cl. 435—69.5 **13 Claims**

1. A DNA comprising an isolated DNA encoding for a MRP-8 polypeptide having a sequence of formula I, wherein formula I is:

(I)

10
-Leu-Thr-Glu-Leu-Glu-Lys-Ala-Leu-Asn-Ser-Ile-Ile-Asp-Val-Tyr-

20 30
His-Lys-Tyr-Ser-Leu-Ile-Lys-Gly-Asn-Phe-His-Ala-Val-Tyr-Arg-Asp-

40
Asp-Leu-Lys-Lys-Leu-Leu-Glu-Thr-Glu-Cys-Pro-Gln-Tyr-Ile-Arg-Lys-

50 60
Lys-Gly-Ala-Asp-Val-Trp-Phe-Lys-Glu-Leu-Asp-Ile-Asn-Thr-Asp-Gly-

70 80
Ala-Val-Asn-Phe-Gln-Glu-Phe-Leu-Ile-Leu-Val-Ile-Lys-Met-Gly-Val-

90 93
Ala-Ala-His-Lys-Lys-Ser-His-Glu-Glu-Ser-His-Lys-Glu.

2. A DNA comprising an isolated DNA encoding for a MRP-14 polypeptide having a sequence of formula II, wherein formula II is:

(II)

6 10
—Ser—Gln—Leu—Glu—Arg—Asn—Ile—Glu—

20
—Thr—Ile—Ile—Asn—Thr—Phe—His—Gln—

30
Tyr—Ser—Val—Lys—Leu—Gly—His—Pro—Asp—

—Thr—Leu—Asn—Gln—Gly—Glu—Phe—Lys—

40
Glu—Leu—Val—Arg—Lys—Asp—Leu—Gln—Asn—

50
—Phe—Leu—Lys—Lys—Glu—Asn—Lys—Asn—

60
Glu—Lys—Val—Ile—Glu—His—Ile—Met—Glu—

70
—Asp—Leu—Asp—Thr—Asn—Ala—Asp—Lys—

80
Gln—Leu—Ser—Phe—Glu—Glu—Phe—Ile—Met—

—Leu—Met—Ala—Arg—Leu—Thr—Trp—Ala—

90
Ser—His—Glu—Lys—Met—His—Glu—Gly—Asp—

100
—Glu—Gly—Pro—Gly—His—His—His—Lys—

110 114
Pro—Gly—Leu—Gly—Glu—Gly—Thr—Pro.

5,702,921

EXPRESSION OF BIOLOGICALLY ACTIVE HUMAN C-REACTIVE PROTEIN IN *ESCHERICHIA COLI*

Toshio Tanaka, Shiga-ken, Japan, assignor to Orienta Yeast Co., Ltd., Tokyo, Japan

Continuation of Ser. No. 223,954, Apr. 6, 1994, abandoned. This application Mar. 26, 1996, Ser. No. 621,897

Claims priority, application Japan, Apr. 27, 1993, 5-122209

Int. Cl.[6] C12P *21/02;* **C12N** *15/70;15/71;1/21*

U.S. Cl. 435—69.6 **16 Claims**

1. A recombinant plasmid comprising an inducible bacterial promoter which is operably linked to a gene encoding a signal peptide operably linked to the gene encoding human C-reactive protein (CRP).

5,702,922

METHOD FOR THE EXTRACTION OF GLICENTIN OR GLICENTIN ANALOGOUS SUBSTANCES

Shinjirou Imai, Ohimachi, Japan, assignor to Nisshin Flour Milling Co., Ltd., Tokyo, Japan

Filed Nov. 22, 1995, Ser. No. 562,148

Claims priority, application Japan, Nov. 29, 1994, 6-294180

Int. Cl.[6] C12P *21/04;* **A61K** *38/00*

U.S. Cl. 435—71.2 **26 Claims**

1. A method for the extraction of glicentin or a glicentin analogous substance from the cells of a transformed microorganism having incorporated therein an expressible gene encoding glicentin or the glicentin analogous substance, which comprises:

a) extracting said glicentin or glicentin analogous substance from said cells with an aqueous acidic solution; and

b) isolating said glicentin or said glicentin analogous substance.

5,702,923

METHOD OF MAKING A LACTOCOCCAL BACTERIOCIN

Peter A. Vandenbergh, Sarasota; Shirley A. Walker, and Blair S. Kunka, both of Bradenton, all of Fla., assignors to Quest International Flavors & Food Ingredients Company, a division of Indopco, Inc., Bridgewater, N.J.

Continuation-in-part of Ser. No. 492,969, Mar. 13, 1990, abandoned. This application Feb. 24, 1992, Ser. No. 840,503

Int. Cl.[6] C12P *21/04;* **C12K** *2/00*

U.S. Cl. 435—71.3 **9 Claims**

1. A method for producing a bacteriocin in a growth medium which comprises:

(a) culturing live cells of *Lactococcus lactis* NRRL-B-18535 in a growth medium for the cells so as to produce the bacteriocin in the growth medium, and wherein the bacteriocin contains a protein having a molecular weight of about 6000 daltons, is inactivated by protease V and not inactivated by alpha-chymotrypsin, trypsin, lipase, pepsin and lysozyme, wherein the bacteriocin inhibits the growth of bacteria selected from the group consisting of *Staphylococcus aureus, Staphylococcus epidermidis, Staphylococcus carnosus, Pediococcus pentosaceus, Pediococcus acidilactici, Lactococcus cremoris, Lactococcus lactis, Leuconostoc mesenteroides, Lactobacillus bulgaricus, Lactobacillus fermentum, Lactobacillus bifermentans, Lactobacillus plantarum* and *Listeria monocytogenes* and has an pH for inhibition between about pH 2 and 8; and

(b) separating the bacteriocin in the growth medium from the cells.

5,702,924

PROCESS FOR PREPARING ANTIPARASITIC AGENTS

Christopher J. Dutton; Stephen P. Gibson, both of Kent, England, and Shih-Jen E. Lee, Waterford, Conn., assignors to Pfizer Inc., New York, N.Y.

Continuation of Ser. No. 249,749, Sep. 27, 1988, abandoned. This application Jan. 25, 1991, Ser. No. 647,674

Claims priority, application United Kingdom, Nov. 14, 1987, 8726730

Int. Cl.[6] C12P *19/56*

U.S. Cl. 435—78 **1 Claim**

1. A process for preparing a compound of the formula

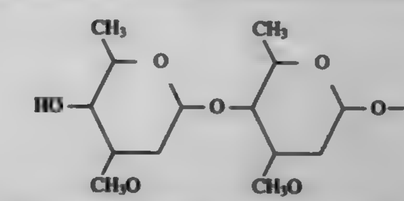

(I)

wherein X represents a single or double bond; R^1 is OH; provided that when X is a single bond, R^1 is OH, and when X is a double bond, R^1 is absent;

R^2 is H, C_1–C_8 alkyl, C_2–C_8 alkenyl, C_2–C_8 alkynyl, alkoxyalkyl or alkylthioalkyl containing from 1 to 6 carbon atoms in each alkyl or alkoxy group, wherein any of said alkyl, alkoxy alkenyl or alkynyl groups may be substituted by one or more halo atoms; or a C_3–C_8 cycloalkyl or C_5–C_8 cycloalkenyl group, either of which may be substituted by methylene or one or more C_1–C_4 alkyl groups or halo atoms; or a 3 to 6 membered oxygen or sulphur containing heterocyclic ring which may be saturated, or fully or partially unsaturated and which may be substituted by one or more C_1–C_4 alkyl groups or halo atoms; or a group of the formula SR^5 wherein R^5 is C_1–C_8 alkyl, C_2–C_8 alkenyl, C_2–C_8 alkynyl, C_3–C_8 cycloalkyl, C_5–C_8 cycloalkenyl, phenyl or substituted phenyl wherein the substituent is C_1–C_4 alkyl, C_1–C_4 alkoxy or halo, or a 3 to 6 membered oxygen or sulphur containing heterocyclic ring which may be saturated, or fully or partially unsaturated and which may be substituted by one or more C_1–C_4 alkyl groups or halo atoms;

R^3 is hydrogen or methyl;

and R^4 is a 4'-(alpha-L-oleandrosyl)-alpha-L-oleandrosyloxy group of the formula

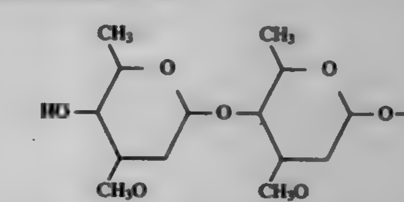

which comprises fermenting a *Streptomyces avermitilis* mutant organism ATCC 53567 or 53568, in the presence of a carboxylic acid of the formula $R^2CH_2CO_2H$, wherein R^2 is as previously defined, or a salt, ester, or amide thereof or oxidative precursor therefor, and isolating the compound of formula (I).

5,702,925

NUCLEOSIDE ANALOGUE METHOD

Clifford Smith, Tring, United Kingdom, and Carl Fuller, Cleveland Heights, Ohio, assignors to Amersham International PLC, Buckinghamshire, United Kingdom

PCT No. PCT/GB94/02630, § 371 Date May 24, 1996, § 102(e) Date May 24, 1996, PCT Pub. No. WO95/15395, PCT Pub. Date Jun. 8, 1995

PCT Filed Dec. 1, 1994, Ser. No. 649,599

Claims priority, application European Pat. Off., Dec. 1, 1993, 93309297

Int. Cl.[6] C12P *19/34;* **C12N** *11/00;* **C07H** *21/02;21/00*

U.S. Cl. 435—91.1 **20 Claims**

1. A method of making a nucleotide, nucleotide analogue, or nucleotide adduct, having a 5=-phosphate or a 5'-thiophosphate

group said method comprising reacting a starting nucleoside, nucleoside analogue, or nucleoside adduct having a 5'-OH group but no 3'-phosphate group, with a nucleotide phosphate donor or nucleotide thiophosphate donor in the presence of an enzyme which catalyses the reaction.

5,702,926

NICKING OF DNA USING BORONATED NUCLEOTIDES

Melinda S. Fraiser, Durham, and George Terrance Walker, Chapel Hill, both of N.C., assignors to Becton, Dickinson and Company, Franklin Lakes, N.J.

Filed Aug. 22, 1996, Ser. No. 701,270

Int. Cl.[6] C12P *19/34;* **C12N** *11/00;* **C07H** *21/00*

U.S. Cl. 435—91.2 **10 Claims**

1. A method for amplifying a target nucleic acid sequence by SDA comprising amplifying the target nucleic acid sequence in an SDA reaction wherein an alpha-boronated deoxynucleoside triphosphate is incorporated into a double-stranded recognition site for a restriction endonuclease, thereby producing a hemimodified restriction endonuclease recognition site which is nicked by the restriction endonuclease during the SDA reaction.

5,702,927

PROCESS FOR PREPARATION OF PURIFIED XANTHAN GUM

Kanji Murofushi; Taira Homma, both of Joetsu; Shigehiro Nagura, Niigata-ken, all of Japan, and Richard W. Armentrout, La Jolla, Calif., assignors to Shin-Etsu Chemical Co., Ltd., Tokyo, Japan, and Shin-Etsu Bio, Inc., San Diego, Calif.

Division of Ser. No. 345,076, Nov. 28, 1994, Pat. No. 5,595,892, which is a continuation-in-part of Ser. No. 990,758, Dec. 15, 1992. This application Jun. 7, 1995, Ser. No. 484,477

Claims priority, application Japan, Dec. 20, 1991, 3-338244; Mar. 13, 1992, 4-54898

Int. Cl.[6] A01N *63/00;* **A61K** *45/00;* **C12N** *1/20;* **C12P** *19/06*

U.S. Cl. 435—104 **6 Claims**

1. A xanthan gum having a transmittance of at least 75% in 1% by weight aqueous solution, and obtained by:

a) subjecting strain ATCC 55429 or ATCC 55298 to submerged fermentation conditions to produce a fermentation broth containing xannthan gum and cellular debris;
b) heating the fermentation broth obtained from step a) at a temperature from 45° to 70° C. for a period of 30 minutes to 2 hours at an initial pH of 9 to 12.5;
c) contacting the heated broth from step b) with an alkaline protease at a temperature of 40° to 65° C. for a period of from 20 minutes to five hours at an initial pH of 6 to 10;
d) contacting the broth from step c) with lysozyme at a temperature of 25° to 60° C. for a period of from 20 minutes to five hours at an initial pH of 5.5 to 8.0; and
e) recovering the xanthan gum from the broth from step d).

5,702,928

PROCESS FOR PRODUCING OPTICALLY ACTIVE TRIAZOLE COMPOUNDS AND METHOD OF RACEMIZING OPTICALLY ACTIVE TRIAZOLE COMPOUNDS

Naoki Kawada; Noritsugu Yamazaki; Takafumi Imoto, and Kiyoshi Ikura, all of Ibaraki, Japan, assignors to Daicel Chemical Industries, Ltd., Japan

PCT No. PCT/JP95/01416, § 371 Date May 24, 1996, § 102(e) Date May 24, 1996, PCT Pub. No. WO96/02664, PCT Pub. Date Feb. 1, 1996

PCT Filed Jul. 17, 1995, Ser. No. 617,747

Claims priority, application Japan, Jul. 18, 1994, 6-165281; Aug. 9, 1994, 6-187032

Int. Cl.[6] C12P *17/10;* **C07D** *249/08*

U.S. Cl. 435—121 **31 Claims**

1. A process for producing a compound having the formula (II-R), said process comprising the steps of

(a) providing a compound having the formula (II), a compound having the formula R_1COOR_2, and a microbial lipase; and
(b) enzymatically reacting said compound having the formula (II) with said compound having the formula R_1COOR_2, in the presence of said microbial lipase, under conditions permitting formation of a compound having the formula (II-R);

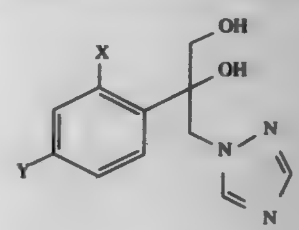

(II)

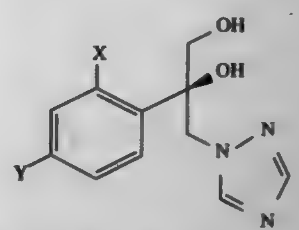

(II-R)

wherein X and Y are either halogen or hydrogen atoms, wherein X and Y may be the same or different atoms;
wherein the configuration of the asymmetric carbon is R; and
wherein R_1 is a straight or branched C_1 to C_4 alkyl or alkenyl group, and R_2 is a straight or branched C_1 to C_6 alkyl or alkenyl group.

5,702,929

ANTIFUNGAL AGENT

Sandra A. Morris, Westfield; James E. Curotto, Morgan; Gerald F. Bills, Clark; Sarah J. Dreikorn, Scotch Plains; Stanley L. Streicher, Verona; Deborah L. Zink, Manalapan; John R. Thompson, Scotch Plains, all of N.J.; Angela Basilio, Madrid, Spain; Fernando Pelaez, Madrid, Spain; Maria Teresa Diez, Madrid, Spain, and Francisca Vicente, Madrid, Spain, assignors to Merck & Co., Inc., Rahway, N.J.

Filed Oct. 21, 1996, Ser. No. 734,704

Int. Cl.[6] C12N *5/00;* **C12P** *17/16;* **C07D** *207/00*

U.S. Cl. 435—118 **7 Claims**

1. A substantially pure compound having the structure:

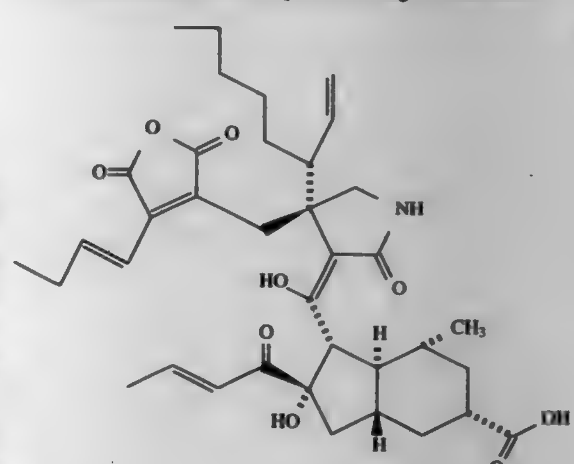

(I)

5,702,930

MICROBIOLOGICAL PROCESS FOR THE PREPARATION OF HETEROAROMATIC CARBOXYLIC ACIDS USING *ALCALIGENES FAECALIS*

Andreas Kiener, Visp; Jean-Paul Roduit, Grône, and Rainer Glöckler, Visperterminen, all of Switzerland, assignors to Lonza, Ltd., Gampel/Valais, Switzerland

Filed Jun. 6, 1996, Ser. No. 659,362

Claims priority, application Switzerland, Jun. 7, 1995, 1664/95; Jun. 13, 1995, 1733/95

Int. Cl.[6] C12P *17/12;1/04;1/20*

U.S. Cl. 435—122 **3 Claims**

1. A microbiological process for the preparation of a heteroaromatic carboxylic acid or one of its physiologically tolerated salts of the formulae I or II:

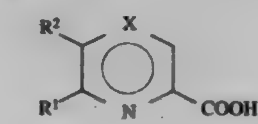

I

or

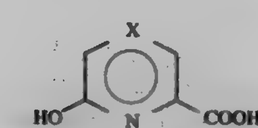

II

wherein R_1 and R_2 are identical or different and each denotes a hydrogen or halogen atom, and X denotes a nitrogen atom or CH—, comprising converting a heteroaromatic nitrile of the formulae III or IV:

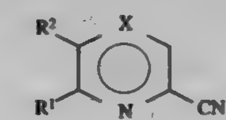

III

or

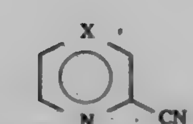

IV

as substrate, wherein R_1 and R_2 have the above stated meanings, comprising the steps of:

a) culturing a microorganism having all the identifying characteristics of *Alcaligenes faecalis* (DSM 6335) in the presence of the inducer, 2-cyanopyridine, and a carbon source selected from the group consisting of a dicarboxylic acid, a tricarboxylic acid and a carbohydrate;
b) reacting the substrate III or IV with the cultured microorganism, wherein the biotransformation is carried out under anaerobic conditions when compounds of the formula I are desired, and under aerobic conditions when compounds of the formula II are desired;
c) recovering the carboxylic acid I or II; and
d) converting the carboxylic acid I or II, where appropriate, into the corresponding physiologically tolerated salt.

5,702,931

MUTAGENESIS METHODS AND COMPOSITIONS

William H. Andrews, San Mateo; Michael J. Morser, San Francisco, and Laura R. Vilander, Richmond, all of Calif., assignors to Berlex Laboratories, Inc., Cedar Knolls, N.J.

PCT No. PCT/US92/05573, § 371 Date Dec. 28, 1993, § 102(e) Date Dec. 28, 1993, PCT Pub. No. WO93/01583, PCT Pub. Date Jan. 21, 1993

Continuation-in-part of Ser. No. 724,237, Jul. 1, 1991, abandoned. This PCT application Jul. 1, 1992, Ser. No. 170,290

Int. Cl.[6] C12N *15/01;15/11;15/63;* **C07H** *21/04*

U.S. Cl. 435—172.3 **12 Claims**

1. A method for introducing a plurality of mutations to a nucleic acid construct comprising a target sequence, a first marker sequence encoding a first protein having an inoperable first marker activity, and a second marker sequence encoding a second protein having an operable second marker activity, said method comprising the steps of:

(a) annealing to a single-stranded form of said nucleic acid construct
a first oligonucleotide having a sequence substantially complementary to a portion of said nucleic acid construct, wherein the sequence of said first oligonucleotide is selected so as to change a nucleotide at a first position of said nucleic acid construct where said first position is within said target sequence, and to introduce or remove a first restriction site at a second position of said nucleic acid construct;
a second oligonucleotide having a sequence substantially complementary to a portion of said nucleic acid construct, wherein the sequence of said second oligonucleotide is selected so as to change one or more nucleotides in said first marker sequence to produce a mutated first marker sequence in a manner which results in an operable first marker activity; and
a third oligonucleotide having a sequence substantially complementary to a portion of said nucleic acid construct, wherein the sequence of said third oligonucleotide is selected so as to change one or more nucleotides in said second marker sequence to produce a mutated second marker sequence in a manner which results in an inoperable second marker activity, thereby forming a primary annealed product;
(b) transforming a host cell with said primary annealed product;
(c) screening or selecting progeny of transformed host cells having said operable first marker activity;
(d) identifying progeny screened or selected and containing a mutated nucleic acid construct containing a mutated target sequence and having said introduced or removed first restriction site;
(e) annealing to a single-stranded form of said mutated nucleic acid construct
a fourth oligonucleotide having a sequence substantially complementary to a portion of said mutated nucleic acid construct, wherein the sequence of said fourth oligonucleotide is selected so as to change a nucleotide at a first position of said mutated nucleic acid construct where said first position is within said mutated target sequence, and to introduce or remove a second restriction site at a second position of said mutated nucleic acid construct;
a fifth oligonucleotide having a sequence substantially complementary to a portion of said mutated nucleic acid construct, wherein the sequence of said fifth oligonucleotide is selected so as to restore said first marker sequence in a manner which results in said inoperable first marker activity; and
a sixth oligonucleotide having a sequence substantially complementary to a portion of said mutated nucleic acid construct, wherein the sequence of said sixth oligonucleotide is selected so as to restore said second marker sequence in a manner which results in said operable second marker activity, thereby forming a secondary annealed product;
(f) transforming a host cell with said secondary annealed product;
(g) screening or selecting progeny of transformed host cells having said operable second marker activity; and
(h) identifying progeny screened or selected and containing a further mutated nucleic acid construct having said introduced or removed second restriction site.

5,702,932

MICROINJECTION METHODS TO TRANSFORM ARTHROPODS WITH EXOGENOUS DNA

Marjorie A. Hoy, and James K. Presnail, both of Gainesville, Fla., assignors to University of Florida, Gainesville, Fla., and University of California, Oakland, Calif.

Continuation of Ser. No. 95,455, Jul. 20, 1993, abandoned, which is a continuation-in-part of Ser. No. 917,703, Jul. 20, 1992, abandoned. This application Jun. 7, 1995, Ser. No. 479,485

Int. Cl.[6] C12N *15/00;5/00*

U.S. Cl. 435—172.3 **7 Claims**

1. A method for producing an arthropod transformed with a heterologous DNA sequence, wherein said method comprises:

injecting said DNA sequence into the reproductive tract of a gravid female arthropod, wherein said injection is prior to oviposition such that transformed ova result, and wherein said arthropod is member of an arthropod family selected from the group consisting of Aphidiidae, Aphelinidae and Phytoseiidae; and

permitting said transformed ova to develop into a transformed arthropod.

5,702,933

CONTROL OF FRUIT RIPENING AND SENESCENCE IN PLANTS

Harry John Klee, Ballwin, and Ganesh Murthy Kishore, Chesterfield, both of Mo., assignors to Monsanto Company, St. Louis, Mo.

Continuation of Ser. No. 809,457, Dec. 17, 1991, Pat. No. 5,512,466, which is a continuation-in-part of Ser. No. 632,440, Dec. 26, 1990, abandoned. This application Nov. 6, 1995, Ser. No. 553,943

Int. Cl.[6] C12N *15/31;15/63;15/82;* **A01H** *5/08*

U.S. Cl. 435—172.3 **19 Claims**

1. A recombinant, double stranded DNA molecule comprising in sequence in the 5' to 3' direction:

a promoter that functions in plant cells to cause the production of an RNA sequence, said promoter operably linked to;

a structural DNA sequence that causes the production of an RNA sequence that encodes a 1-aminocyclopropane-1-carboxylic acid deaminase enzyme, said structural DNA sequence operably linked to;

a 3' non-translated region that functions in plant cells to polyadenylate the 3' end of said RNA sequence;

wherein said promoter is heterologous with respect to said structural DNA sequence.

5,702,934

PROCESSES FOR PRODUCING AN ENZYME

Sven Hastrup, København V.; Sven Branner, Lyngby; Birthe Ravn Jørgensen, Søborg; Tove Christensen, Lyngby; Birgitte Bojer Jørgensen, Kokkedal, all of Denmark; Jeffrey R. Shuster, Davis, Calif.; Mark Madden, Pleasant Hill, Calif.; Donna L. Moyer, Davis, Calif., and Claus Fuglsang, Copenhaven NV, Denmark, assignors to Novo Nordisk A/S, Bagsvaerd, Denmark, and Novo Nordisk Biotech, Inc., Davis, Calif.

Filed May 4, 1994, Ser. No. 238,130

Claims priority, application Denmark, May 5, 1993, 522/93

Int. Cl.[6] C12N *9/00;9/76;9/58;1/15*

U.S. Cl. 435—183 **28 Claims**

1. A process for producing an active trypsin-like *Fusarium oxysporum* protease by fermentation of a cell expressing the enzyme in the form of a proenzyme having an amino acid sequence of SEQ ID NO:2, in which the cell expressing the proenzyme has been transformed with a nucleic acid fragment containing a nucleic acid sequence encoding the proenzyme, which process comprises

a. performing the fermentation in the presence of a proteolytic enzyme, in which said proteolytic enzyme is encoded by and expressed from a recombinant DNA sequence present in the cell from which the proenzyme is expressed, is different from the active enzyme and capable of converting the proenzyme into an active enzyme, and

b. recovering the active enzyme from the fermentation broth.

5,702,935

METHOD AND COMPOUNDS FOR INHIBITING LIPID BIOSYNTHESIS OF BACTERIA AND PLANTS

James Sacchettini, New Rochelle; John Blanchard, Pelham Manor, and William R. Jacobs, Jr., City Island, all of N.Y., assignors to Albert Einstein College of Medicine of Yeshiva University, a Division of Yeshiva University, Bronx, N.Y.

Filed Apr. 28, 1994, Ser. No. 234,011

Int. Cl.[6] C12N *9/10;* **C30B** *29/58*

U.S. Cl. 435—193 **6 Claims**

1. A crystallized InhA enzyme in the form of a plate having a space group C2 and unit cell constants of a=101.1 Å; b=83.4 Å; c=192.9 Å; β=95°; and $\alpha=\gamma$=90°.

5,702,936

CYCLIC GMP-BINDING, CYCLIC GMP-SPECIFIC PHOSPHODIESTERASE MATERIALS AND METHODS

Joseph A. Beavo, Seattle, Wash.; Jackie D. Corbin, Nashville, Tenn.; Kenneth M. Ferguson, Bothell, Wash.; Sharron H. Francis, Nashville, Tenn.; Ann Kadlecek; Kate Loughney, both of Seattle, Wash.; Linda M. McAllister-Lucas, Nashville, Tenn.; William K. Sonnenburg, Mountlake Terrace, Wash., and Melissa K. Thomas, Boston, Mass., assignors to ICOS Corporation, Bothell, Wash.; Vanderbilt University, Nashville, Tenn., and Board of Regents of the University of Washington, Seattle, Wash.

Continuation-in-part of Ser. No. 68,051, May 27, 1993, abandoned. This application May 27, 1994, Ser. No. 250,847

Int. Cl.[6] C12N *9/16;15/55*

U.S. Cl. 435—196 **3 Claims**

1. A fragment of human cGMP-binding phosphodiesterase consisting of the amino acids 516 to 875 of SEQ ID NO: 23.

5,702,937

METHOD FOR POTENTIATING TISSUE PLASMINOGEN ACTIVATOR WITH β-LACTOGLOBULIN

Craig M. Zwickl, Indianapolis, Ind., assignor to Eli Lilly and Company, Indianapolis, Ind.

Filed May 23, 1995, Ser. No. 448,011

Int. Cl.[6] C12N *9/48;9/00*

U.S. Cl. 435—212 **4 Claims**

1. A method for increasing the enzymatic activity of a mammalian tissue plasminogen activator protein which comprises adding from 5 to 50 μg/mL of beta lactoglobulin A to a composition containing the mammalian tissue plasminogen activator protein.

5,702,938

HUMAN TISSUE PLASMINOGEN ACTIVATOR

David V. Goeddel, Hillsborough; William J. Kohr, San Mateo; Diane Pennica, Foster City, and Gordon A. Vehar, San Carlos, all of Calif., assignors to Genetech, Inc., So. San Francisco, Calif.

Continuation of Ser. No. 63,638, May 19, 1993, abandoned, which is a continuation of Ser. No. 648,319, Jan. 29, 1991, abandoned, which is a continuation of Ser. No. 489,855, Mar. 2, 1990, Pat. No. 5,185,259, which is a continuation of Ser. No. 12,694, Feb. 9, 1987, abandoned, which is a division of Ser. No. 483,052, Apr. 7, 1983, Pat. No. 4,766,075, which is a continuation-in-part of Ser. No. 398,003, Jul. 14, 1982, abandoned, and Ser. No. 374,860, May 5, 1982, abandoned. This application Jun. 6, 1995, Ser. No. 468,974

Int. Cl.[6] C12N *9/50;15/58*

U.S. Cl. 435—226 **4 Claims**

1. A DNA molecule which is a cDNA molecule or a recombinant DNA molecule encoding an amino acid sequence comprising the presequence of human tissue plasminogen activator.

5,702,939

GLUCOSAMINE-6-PHOSPHATE DEAMINASE AND PROCESS FOR PRODUCING THE SAME

Shizu Fujishima, and Naoko Yamano, both of Ikeda, Japan, assignors to Agency of Industrial Science & Technology, Tokyo, Japan

Filed Mar. 7, 1996, Ser. No. 612,491

Claims priority, application Japan, Apr. 25, 1995, 7-125787

Int. Cl.[6] C12N *9/90;9/78;9/80*

U.S. Cl. 435—233 **3 Claims**

1. An isolated and purified glucosamine-6-phosphate deaminase which is produced by a microorganism belonging to the genus Vibrio and identified on the basis of the following physicochemical properties:

(1) function:
acting on the amino group of D-glucosamine 6-phosphate to thereby form D-fructose 6-phosphate;

(2) substrate specificity:
acting on D-glucosamine 6-phosphate but not on D-glucosamine;

(3) optimum pH value:
7.4 to 7.8;

(4) stable pH value:
7.0 to 9.0 (after incubating at 37° C. for 30 minutes, at least 70% of the activity is sustained);

(5) optimum temperature:
37° to 38° C; and

(6) heat stability:
50° C. (after incubating at pH 7.5 for 30 minutes, at least 70% of the activity is sustained).

5,702,940

CELLULASE PRODUCING MICROORGANISM ATCC 55702

H. Craig Dees, Lenoir City, Tenn., assignor to Lockheed Martin Energy Systems, Inc., Oak Ridge, Tenn.

Division of Ser. No. 528,178, Sep. 14, 1995. This application Oct. 8, 1996, Ser. No. 729,817

Int. Cl.[6] C12N *1/20;9/24;9/42*

U.S. Cl. 435—252.1 **4 Claims**

1. A bacterial strain having all of the identifying characteristics of ATCC 55702.

5,702,941

GAS PERMEABLE BIOREACTOR AND METHOD OF USE

Ray P. Schwarz, Friendswood, Tex., assignor to Synthecon, Inc., Houston, Tex.

Continuation-in-part of Ser. No. 416,908, Apr. 21, 1995, which is a continuation-in-part of Ser. No. 118,512, Sep. 9, 1993, Pat. No. 5,437,998. This application Feb. 16, 1996, Ser. No. 602,702

Int. Cl.[6] C12N *5/02;* **C12M** *3/00*

U.S. Cl. 435—243 **8 Claims**

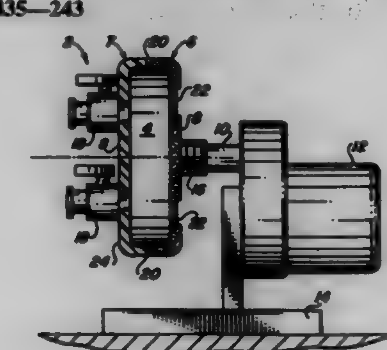

3. A method for culturing cells in a bioreactor to produce in vitro multi-cellular, three dimensional assemblies of predominately living mammalian cells attached to the inside surface of the bioreactor, said method comprising:

providing a bioreactor formed from a tubular vessel having outer walls, said outer walls having an inside surface and an outside surface, said outer walls constructed at least partially of a gas permeable material, said tubular vessel having closed ends and a substantially horizontal longitudinal central axis extending between said ends, means to controllably rotate said tubular vessel about its substantially horizontal longitudinal central axis, means to introduce an oxygen-containing fluid throughout said tubular vessel;

coating said inside surface with a material to which a plurality of cells may attach;

filling said bioreactor with a liquid culture medium and mammalian cells;

suspending said cells, without appreciable mixing, in the liquid culture medium by rotating said bioreactor about its substantially horizontal longitudinal central axis at a rate that suspends the cells in the liquid culture medium;

varying the rate of rotation such that the cells attach to the inside surface of the vessel;

continuing rotation of the bioreactor for a time period that permits cell growth adjacent to the inside surface of the vessel; and

maintaining a constant flow of liquid culture medium in and out of the vessel;

wherein gas is permeated through the outer wall of the tubular vessel.

5,702,942

MICROORGANISM STRAINS THAT PRODUCE A HIGH PROPORTION OF ALTERNAN TO DEXTRAN

Timothy D. Leathers; G. Thomas Hayman, both of Peoria, and Gregory L. Cote, Edwards, all of Ill., assignors to The United States of America as represented by the Secretary of Agriculture, Washington, D.C.

Division of Ser. No. 284,312, Aug. 2, 1994, abandoned. This application Jun. 6, 1995, Ser. No. 474,637

Int. Cl.[6] C12N *1/20*

U.S. Cl. 435—252.9 **3 Claims**

1. A biologically pure culture of a bacterial strain that produces a greater proportion of alternan to dextran, said strain selected from the group-consisting of *Leuconostoc mesenteroides* NRRL B-21138 and *L. mesenteroides* NRRL B-21297.

5,702,943

PROCESS FOR PREPARING A BIOMASS ON A CEREAL MEDIUM, USE OF THE PRODUCTS SO PREPARED AND PANIFICATION FERMENT

Aloyse Ehret, Blotzheim, France, assignor to Agrano AG, Allschwil, Switzerland

Filed May 15, 1995, Ser. No. 440,767

Claims priority, application European Pat. Off., May 27, 1994, 94810307

Int. Cl.[6] A23L *1/28;1/221;* **C12N** *1/20*

U.S. Cl. 435—253.6 **10 Claims**

1. A process for preparing a biomass on a culture medium, the biomass being directly usable as a panification ferment without separating the biomass from the culture medium and without the addition of industrial yeast, said process comprising:

obtaining the culture medium;

inoculating the culture medium with at least one strain of yeast;

providing an air supply;

cultivating the strain of yeast on the culture medium in the presence of the air supply; and

recovering the medium containing the biomass,

wherein the culture medium comprises a medium free of any chemical additives obtained by;

preparing a dilute aqueous mixture comprising at least whole-flour or wheat germ, the mixture comprising starch and gluten;
adding at least one alpha-amylase and at least one amyloglucosidase to hydrolyze all of the starch in the mixture into fermentable sugar; and
adding at least one proteolytic enzyme of food quality to gently hydrolyze at least part of the gluten in the mixture, thereby obtaining the culture medium.

5,702,944
MICROBIAL TRANSPORT MEDIA
Stephen G. Racioppi, Norcross, Ga., and James P. Brinker, Dudley, Mass., assignors to Micro Test, Inc., Snellville, Ga.
Continuation-in-part of Ser. No. 279,589, Jul. 25, 1994, Pat. No. 5,545,555. This application Feb. 9, 1996, Ser. No. 599,606
Int. Cl.^{6} C12N *1/20;1/12;1/04;1/00*
U.S. Cl. 435—253.6 **4 Claims**

1. A aqueous transport medium capable of maintaining the viability of a plurality of microorganisms selected from the group consisting of Chlamydia, Mycoplasma, Ureaplasma, and viruses, said medium having physiological pH and comprising about 94–96.75 ml of water and:

gelatin (Bloom value 40–125)	0–20.0	g
sugar	65–75	g
HEPES	5–7	g
KCl	0.3–0.6	g
L-glutamic acid	0.5–1.0	g
phenol red	5–15	mg
$CaCl_2$	0.1–0.5	g
$MgSO_4.7H_2O$	0.1–0.3	g
bovine serum albumin	1.0–20.0	g
vancomycin	0.01–0.05	g
colistin	100,000–250,000	units
amphotericin B	0.5–3.0	mg

5,702,945
CULTURE VESSEL FOR CELL CULTURES ON A CARRIER
Hans-Otto Nagels, Bovenden; Dieter Schröder, Osterode, and Eckart Kopowski, Braunschweig, all of Germany, assignors to Heraeus Instruments GmbH, Hanau, Germany
Filed Feb. 1, 1996, Ser. No. 595,351
Claims priority, application Germany, Feb. 15, 1995, 195 04 958.6
Int. Cl.^{6} C12M *3/06*
U.S. Cl. 435—297.1 **16 Claims**

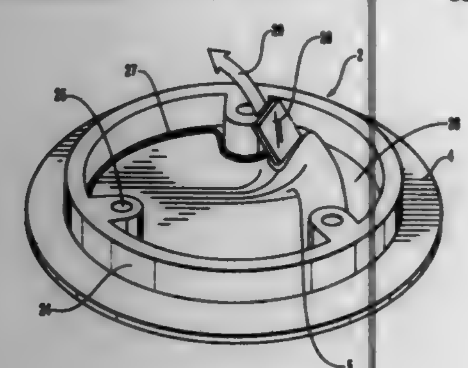

1. A cell culture vessel comprising:
a cell culture chamber for receiving a cell culture;
a supply chamber for receiving a nutrient medium;
a dialysis membrane interposed between the cell culture chamber and the supply chamber whereby nutrients are separated from the cell culture chamber but may be transported from the supply chamber through the dialysis membrane into the cell culture chamber and whereby metabolic waste products may be transported out of the cell culture chamber through the dialysis membrane and into the supply chamber;
a gas exchange membrane interposed between the cell culture chamber and a source of oxygen which is permeable to gas, wherein the gas exchange membrane is detachable from the cell culture chamber;
a removal device comprising a break-away edge running around the edge of said gas exchange membrane;
a three-dimensional carrier for the cell; and
a support piece for said carrier.

5,702,946
ANTI-IL-8 MONOCLONAL ANTIBODIES FOR TREATMENT OF INFLAMMATORY DISORDERS
Claire M. Doerschuk, Indianapolis, Ind.; Sherman Fong, Alameda, Calif.; Caroline Alice Hebert, San Francisco, Calif.; Kyung Jin Kim, Los Altos, Calif., and Steven R. Leong, Berkeley, Calif., assignors to Genentech, Inc., South San Francisco, Calif.
Continuation-in-part of Ser. No. 205,864, Mar. 3, 1994, abandoned. This application Mar. 1, 1995, Ser. No. 398,611
Int. Cl.^{6} C12N *15/00;* **C07K** *16/00;16/24;* **C12P** *21/08*
U.S. Cl. 435—320.1 **12 Claims**

1. An anti-IL-8 monoclonal antibody, wherein the antibody comprises an antigen binding site comprising the complementarity determining regions of the light chain polypeptide of FIG. 24 (SEQ ID NO:48) and the complementarity determining regions of the heavy chain polypeptide of FIG. 25 (SEQ ID NO:50).

5,702,947

Patent Not Issued For This Number

5,702,948
SACCULAR COLLAGEN AND COMPOSITIONS AND METHODS FOR MAKING AND USING THE SAME
Mark I. Greene, Penn Valley, and James G. Davis, Philadelphia, both of Pa., assignors to The Trustees of the University of Pennsylvania, Philadelphia, Pa.
Filed Feb. 2, 1995, Ser. No. 383,744
Int. Cl.^{6} C12N *15/12*
U.S. Cl. 435—348 **23 Claims**

1. An isolated nucleic acid molecule comprising a nucleotide sequence that encodes the protein having the amino acid sequence of SEQ ID NO:2.

5,702,949
CULTURE METHOD FOR MULTILAYER GROWTH OF ANCHORAGE-DEPENDENT CELLS
Edward M. Trujillo, Sandy, and Catherine Rappaport, Salt Lake City, both of Utah, assignors to University of Utah Research Foundation, Salt Lake City, Utah
Filed Jun. 19, 1996, Ser. No. 665,822
Int. Cl.^{6} C12N *5/00*
U.S. Cl. 435—402 **19 Claims**

1. A method for the attachment and growth of cells comprising the steps of:
a. contacting a surface with a perfluorocarbon;
b. bonding a perfluoroalkylated protein to the perfluorocarbon such that a perfluoroalkylated/perfluorocarbon substratum is formed;

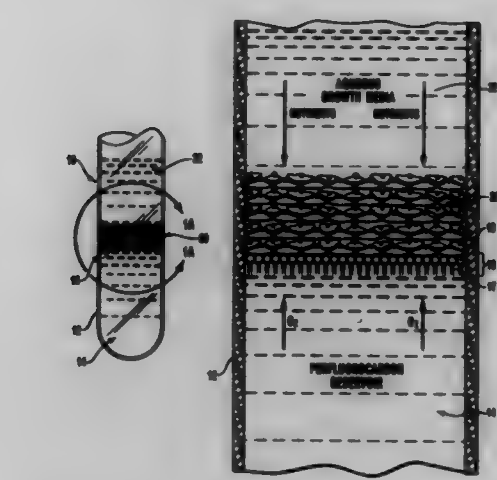

c. adding aqueous growth media; and
d. contacting the perfluoroalkylated/perfluorocarbon substratum with cells.

5,702,950
MAGNETIC MATERIAL ATTRACTING/RELEASING CONTROL METHOD MAKING USE OF A PIPETTE DEVICE AND VARIOUS TYPES OF ANALYZER USING THE METHOD
Hideji Tajima, Tokyo, Japan, assignor to Precision System Science Co., Ltd., Tokyo, Japan
Filed Jun. 5, 1995, Ser. No. 462,434
Claims priority, application Japan, Jun. 15, 1994, 6-157959; Feb. 6, 1995, 7-039425
Int. Cl.^{6} G01N *35/10;33/543;* **B01L** *3/02*
U.S. Cl. 436—49 **21 Claims**

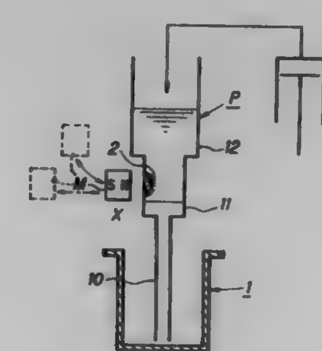

1. A magnetic substance attracting/releasing control method comprises the steps of: providing a pipette device having a liquid suction line including a liquid inlet end for sucking a liquid containing said magnetic substance from a container and discharging said liquid through said liquid inlet end, and a magnet body or magnet bodies being detachably fitted to an external peripheral surface of said liquid suction line of said pipette device; said pipette device providing attracting/releasing control by absorbing and maintaining said magnetic substance contained in said liquid and attracted to said liquid suction line due to magnetism in said magnet body or bodies on an internal surface of said liquid suction line, said magnetic substance being maintained on said internal surface of said pipette device and also by releasing said magnetic substance from said liquid suction line by means of interrupting effect by magnetism in said magnet body or bodies so that said substance is discharged together with said liquid to outside of said liquid suction line through said liquid inlet end.

5,702,951
CONTINUOUS RBCOD MEASUREMENT
John Stephen Bridger, Forest Hill, Australia, assignor to Commonwealth Scientific and Industrial Research Organisation, Campbell, Australia
Continuation of Ser. No. 962,785, Dec. 31, 1992, abandoned. This application Sep. 29, 1994, Ser. No. 310,793
Claims priority, application Australia, Jul. 4, 1990, PK0974
Int. Cl.^{6} G01N *33/18*
U.S. Cl. 436—62 **11 Claims**

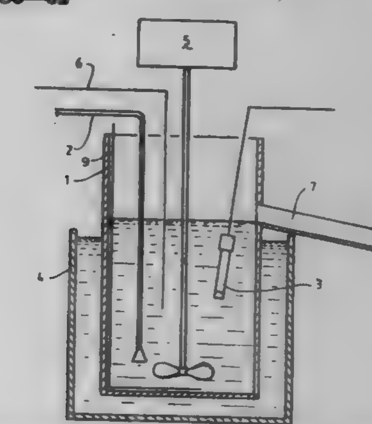

1. A method for periodically determining in real time the readily biodegradable chemical oxygen demands (RBCOD) in a wastewater stream or feed without adding sludge or biomass comprising:
i) feeding a portion of a wastewater stream or feed into a bioreactor without supplementary addition of sludge or biomass whereby a feed rate is controlled to ensure a hydraulic retention time (HRT) in the bioreactor sufficient for substantially complete oxidation of readily biodegradable compounds in the portion,
ii) periodically passing air through the portion in the bio-reactor,
iii) during periods when air is not passed through the portion in the bio-reactor, measuring oxygen consumption values of the portion in the bioreactor by measuring a change in the dissolved oxygen content over a measured time interval, and
iv) calculating an RBCOD value for each of the measured oxygen consumption values by multiplying each measured oxygen consumption value by an apparatus constant.

5,702,952
LABELLED BORONIC ACID DERIVATIVES
Erling Sundrehagen, Oslo, and Frank Frantzen, Tverlandet, both of Norway, assignors to Axis Biochemicals ASA, Oslo, Norway
Division of Ser. No. 220,525, Mar. 31, 1994, Pat. No. 5,631,364. This application Feb. 21, 1997, Ser. No. 804,328
Int. Cl.^{6} G01N *33/72*
U.S. Cl. 436—67 **19 Claims**

1. An assay kit comprising a compound of formula III

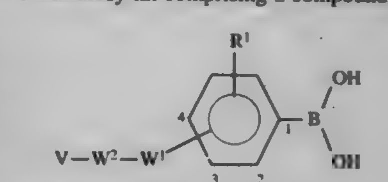

(III)

(wherein V is a reporter moiety;
W^2 is a bond or an organic linker moiety;
W^1 is a $^*SO_2NR^2$, $^*CONR^2$ or $^*CH_2N^{\oplus}R^2_2$ group bound at the *-marked atom to the phenyl ring;
R^1 is hydrogen or an electron withdrawing substituent group; and
each R^2 independently is hydrogen or an optionally hydroxylated and optionally C_{1-6}-alkoxylated C_{1-6}-alkyl group) or a salt thereof, means for contacting a cis-diol containing fluid sample therewith, means for separating cis-diol:boronic acid

conjugates thus formed and, optionally, means for assessing thus separated cis-diol:boronic acid conjugates.

5,702,953

DEVICE FOR ANALYSIS OF RAPID AGGLUTINATION OF PARTICLES AND METHOD FOR USING SAME

Carol Mazarek, Elmhurst, Ill.; Charles L. Nelson, Richland, Mich.; Steven C. Hodges, Buffalo Grove, and James W. Scheffel, Mundelein, both of Ill., assignors to Abbott Laboratories, Abbott Park, Ill.

Continuation of Ser. No. 818,410, Jan. 3, 1992, abandoned, which is a continuation of Ser. No. 572,519, Aug. 23, 1990, abandoned. This application Jun. 4, 1992, Ser. No. 893,964

Int. Cl.⁶ G01N *33/86*

U.S. Cl. 436—69 **8 Claims**

1. An agglutination assay for detecting the presence or amount of an analyte in a test sample, comprising the steps of:

a) placing the test sample in a device comprising:

i) a sample receiving well which accommodates the test sample when the device is in a horizontal position,

ii) a reaction chamber having a first end and a second end, wherein said receiving well communicates with said first end of said reaction chamber such that the test sample passes from said receiving well and fills said reaction chamber when the device is placed at an angle to the horizontal but will not pass when the device is horizontal,

iii) a reservoir communicating with said second end of said reaction chamber to collect excess test sample from said reaction chamber,

iv) a vent communicating from said reservoir to the exterior of the device; and

b) placing the device at an angle to the horizontal, thereby initiating an agglutination reaction between a suspension of particles and the analyte whereby gravity causes the downward movement of said particles through said filled reaction chamber to cause agglutination if the analyte is present at a threshold amount; and

c) observing the agglutination reaction which occurs in said reaction chamber in the presence of analyte.

5,702,954

METHOD TO DETECT PHOSPHORUS

Donald H. Stedman, Denver, and Patti A. Meeks, Westminster, both of Colo., assignors to Colorado Seminary, Denver, Colo.

Filed Sep. 29, 1995, Ser. No. 536,571

Int. Cl.⁶ G01N *21/76*

U.S. Cl. 436—103 **5 Claims**

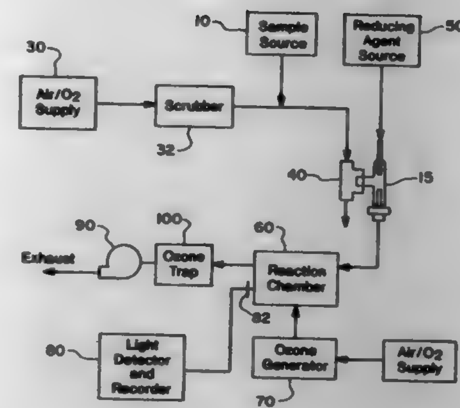

1. A method for detecting and measuring phosphorus in phosphorus-containing compounds comprising the steps of:

admixing a sample including a phosphorus-containing compound with oxygen;

introducing said sample mixed with oxygen into a combustion chamber;

providing a flammable reducing agent into said combustion chamber to fuel combustion within said combustion chamber to convert said phosphorus in said phosphorus-containing compound to phosphorus monoxide;

extracting at least a portion of said phosphorus monoxide from said combustion chamber into a reaction chamber;

contacting said phosphorus monoxide in said reaction chamber with ozone under such conditions that said phosphorus monoxide is converted to chemiluminescent phosphorus dioxide; and

measuring the intensity of said chemiluminescence to provide an indication of the amount of phosphorus present in said sample.

5,702,955

ASCORBATE RESISTANT DETECTION OF HYDROGEN PEROXIDE

Michael Pugia, Granger, Ind., assignor to Bayer Corporation, Elkhart, Ind.

Filed Oct. 6, 1995, Ser. No. 446,478

Int. Cl.⁶ G01N *33/00*

U.S. Cl. 436—135 **25 Claims**

1. A method for the detection of hydrogen peroxide in a solution which may contain ascorbate, comprising the steps of:

(a) adding to said solution an oxidation-reduction indicator and a transition metal complex having the structure:

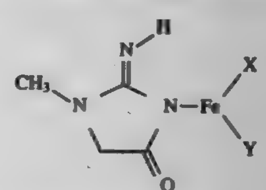

wherein X and Y are independently chosen from the group consisting of creatinine, chloride, fluoride, bromide, iodide, sulfate, phosphate, perchlorate, nitrate, oxalate, sulfide, ammonium, gluconate, cyanide, thiocyanate, catechol, tropolone, phenol, pyridine, acetate, citrate, tartaric acid, malonic acid, boric acid, succinic acid, glycerol-2-phosphate, salicylic acid, oxalic acid, and malic acid; and

(b) analyzing the color transition to detect the presence or concentration of hydrogen peroxide.

5,702,956

TEST SITE AND A METHOD OF MONITORING VIA ETCH DEPTHS FOR SEMICONDUCTOR DEVICES

Shu-Lan Ying; Yuan-Chang Huang, both of Hsin-Chu; Jue-Jye Chen, I-Lan, and Yuh-Jier Mii, Taipei, all of Taiwan, assignors to Taiwan Semiconductor Manufacturing, Company Ltd, Hsin-Chu, Taiwan

Filed Aug. 26, 1996, Ser. No. 703,086

Int. Cl.⁶ H01L *21/66*

U.S. Cl. 437—8 **20 Claims**

1. A method of monitoring the via etch removal of a top barrier layer over a metal layer on a semiconductor substrate comprising:

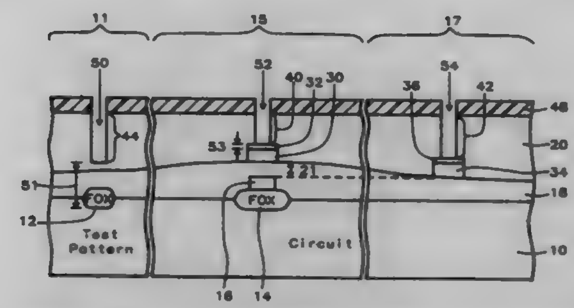

a) providing a semiconductor substrate having at least a test site area and a circuit area;

b) forming field oxide regions and semiconductor elements over portions of said substrate in said test site area and said circuit area;

c) forming an interlevel dielectric layer over said field oxide regions and said semiconductor elements;

d) forming first metal lines having a top barrier layer over portions of said circuit area;

e) an intermetal dielectric layer over said metal lines and said interlevel dielectric layer;

f) etching a test site via through portions of said intermetal dielectric layer in said test site area and simultaneously etching circuit vias through at least portions of said inter metal dielectric layer in said circuit area over said metal lines; and

g) measuring the thicknesses of said field oxide region, said interlevel dielectric layer and said intermetal dielectric layer under said test site via.

5,702,957

METHOD OF MAKING BURIED METALLIZATION STRUCTURE

Gobi R. Padmanabhan, Sunnyvale, Calif., assignor to LSI Logic Corporation, Milpitas, Calif.

Filed Sep. 20, 1996, Ser. No. 710,783

Int. Cl.⁶ H01L *21/265*

U.S. Cl. 437—24 **16 Claims**

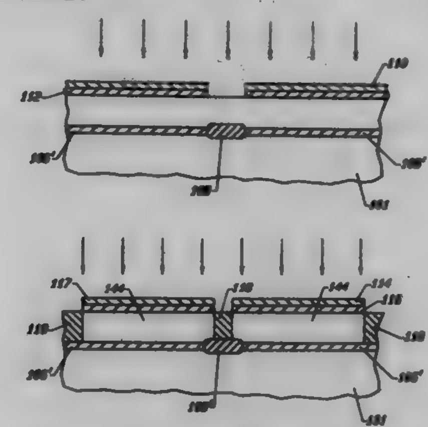

1. A process of forming a buried interconnect providing a conductive pathway between multiple active devices provided in an active layer of a semiconductor substrate having a surface, the buried interconnect being located beneath the surface of said semiconductor substrate, the process comprising the following steps:

masking regions of said semiconductor substrate overlying regions outside of the location of said buried interconnect;

implanting a conductive dopant including aluminum in said semiconductor substrate to provide said buried interconnect at a defined distance below the surface of said semiconductor substrate;

forming said multiple active devices in said active layer of the semiconductor such that the buried interconnect electrically connects the multiple active devices; and

forming an insulating layer at about said defined distance below the surface of said semiconductor substrate wherein said insulating layer bounds said buried interconnect thereby confining current between said multiple active devices to the buried interconnect.

5,702,958

METHOD FOR THE FABRICATION OF BIPOLAR TRANSISTORS

William U. Liu, and Darrell G. Hill, both of Plano, Tex., assignors to Texas Instruments Incorporated, Dallas, Tex.

Filed Aug. 9, 1994, Ser. No. 287,568

Int. Cl.⁶ H01L *21/265*

U.S. Cl. 437—31 **12 Claims**

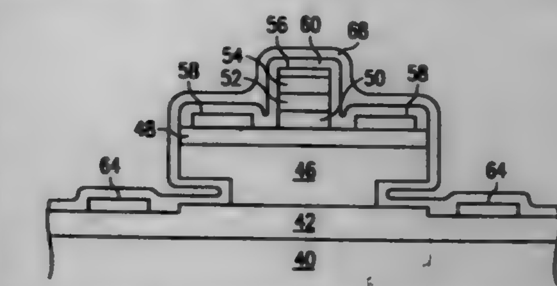

1. A method for fabricating a semiconductor device having semiconductor ledge material extending over an undercut region, said method comprising the step of forming a layer of material in tensile stress and coupled to said semiconductor ledge material over said undercut region or region to be undercut, said layer of material in tensile stress remaining over said undercut region or region to be undercut during steps of said method of fabrication following the formation of said undercut region, whereby said layer of material in tensile stress provides support for said semiconductor ledge material.

5,702,959

METHOD FOR MAKING AN ISOLATED VERTICAL TRANSISTOR

Louis N. Hutter, Richardson, and Jeffrey P. Smith, Plano, both of Tex., assignors to Texas Instruments Incorporated, Dallas, Tex.

Filed May 31, 1995, Ser. No. 455,945

Int. Cl.⁶ H01L *21/265*

U.S. Cl. 437—31 **16 Claims**

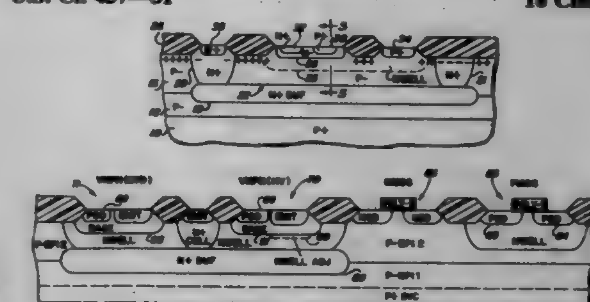

1. A process for making a vertical PNP transistor, comprising the steps of:

forming a highly doped N type buried isolation region in a P type semiconductor substrate to vertically isolate a top portion of said substrate from a bottom portion of said substrate by diffusing a N type impurity into a buried portion of said substrate;

forming a highly doped N type isolation region to encompass and laterally isolate said top portion of said substrate;

diffusing a N type base impurity into said encompassed top portion of said substrate to form a base region;

diffusing a P type emitter impurity into said base region to form an emitter region and, wherein said step of diffusing an N type impurity into a buried portion of said substrate comprises:
forming a first lightly doped layer of P type semiconductor material on a surface of a highly doped P type underlying substrate on said bottom portion of said substrate,
introducing a N type buried layer impurity into a surface region of said first lightly doped layer,
forming a second lightly doped layer of P type semiconductor material on said first lightly doped layer and said buried layer impurity to provide said top portion of said substrate, and
diffusing said N type buried layer impurity into said first and second lightly doped layers of P type semiconductor material; and diffusing a P type collector resistivity adjusting impurity into a second lightly doped layer prior to the step of diffusing the base impurity.

5,702,960

METHOD FOR MANUFACTURING POLYSILICON THIN FILM TRANSISTOR

Kyusun Moon, Suwon, Rep. of Korea, assignor to Samsung Electronics Co., Ltd., Suwon, Rep. of Korea

Filed Feb. 27, 1995, Ser. No. 396,162

Claims priority, application Rep. of Korea, Feb. 25, 1994, 94-3531

Int. Cl.^{6} H01L *21/786*

U.S. Cl. 437—40 TFT **4 Claims**

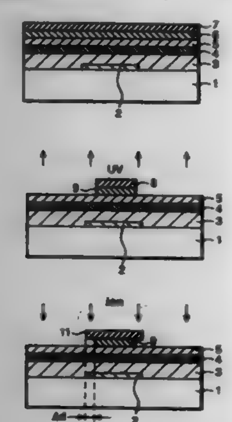

1. A method for manufacturing a thin film transistor comprising the steps of:
preparing a transparent substrate having a top face and a bottom face;
forming a lower gate pattern on said top face of said transparent substrate;
depositing a first insulating layer, a semiconductor layer, a second insulating layer, and a conducting layer successively over said lower gate pattern;
forming a first photoresist layer on said conducting layer;
patterning said first photoresist layer by exposing through said bottom face of said transparent substrate using said lower gate pattern as a mask;
forming an upper gate pattern by etching said conducting layer using said patterned first photoresist layer as a mask, said upper gate pattern being formed so as to have a width smaller than a width of said lower gate pattern;
removing said patterned first photoresist layer;
forming a second photoresist layer on said upper gate pattern;
patterning said second photoresist layer by exposing through said bottom face of said transparent substrate using said lower gate pattern as a mask, said second photoresist layer being patterned so that said patterned second photoresist layer has a width larger than said width of said upper gate pattern;
implanting ions into said semiconductor layer utilizing said patterned second photoresist layer as a mask; and
removing said patterned second photoresist layer.

5,702,961

METHODS OF FORMING INSULATED GATE BIPOLAR TRANSISTORS HAVING BUILT-IN FREEWHEELING DIODES AND TRANSISTORS FORMED THEREBY

Jae-Hong Park, Kyungki-do, Rep. of Korea, assignor to Samsung Electronics Co., Ltd., Suwon, Rep. of Korea

Filed Aug. 8, 1996, Ser. No. 695,168

Claims priority, application Rep. of Korea, Dec. 30, 1995, 95-68649

Int. Cl.^{6} H01L *21/266*

U.S. Cl. 437—40 **20 Claims**

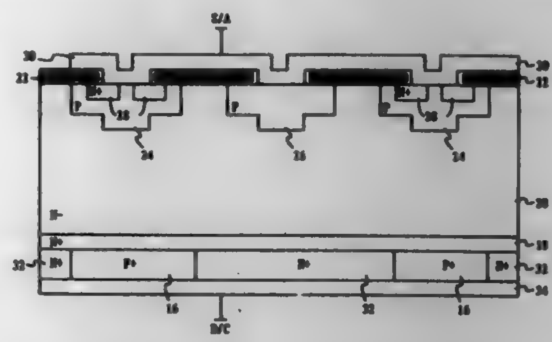

1. A method of forming an insulated-gate bipolar transistor having a built-in freewheeling diode, comprising the steps of:
forming an array of emitter regions of second conductivity type in a cathode layer of first conductivity type, at a face thereof; then
forming a base region of first conductivity type on the face of the cathode layer; then
forming an array of collector regions of second conductivity type in the base region, at a face thereof, so that the array of collector regions extends opposite the array of emitter regions of second conductivity type;
forming an array of anode regions of second conductivity type in the base region, laterally offset on the face of the base region relative to the array of collector regions and separated therefrom by the base region;
forming an array of source regions of first conductivity type in the array of collector regions, but not in the array of anode regions;
forming insulated gate electrode means on the face of the base region for electrically connecting the array of source regions to the base region in response to application of a predetermined forward gate bias thereto;
forming an electrode in ohmic contact with the array of collector regions and array of source regions therein;
forming an electrode in ohmic contact with the array of anode regions; and
forming an electrode in ohmic contact with the array of emitter regions and the cathode layer.

5,702,962

FABRICATION PROCESS FOR A STATIC INDUCTION TRANSISTOR

Yoshio Terasawa, 622-19, Ichige, Hitachinaka-City, Ibaraki-Pref., 312, Japan

Division of Ser. No. 468,823, Jun. 6, 1995, Pat. No. 5,602,405. This application Oct. 30, 1996, Ser. No. 739,953

Claims priority, application Japan, Sep. 5, 1994, 6-211008

Int. Cl.^{6} H01L *21/265;21/44;21/48*

U.S. Cl. 437—40 **15 Claims**

1. A process for fabricating a semiconductor device, which comprises the steps of:
providing first and second semiconductor substrates of the same conductive type;
selectively forming gate regions composed of a semiconductor having a conductive type different from that of the first semiconductor substrate in one principal surface of the first

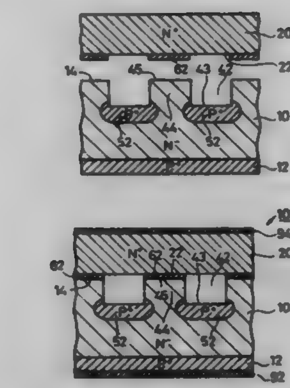

semiconductor substrate with portions of said one principal surface of the first semiconductor substrate exposed between the gate regions;
forming a metal layer and/or a metal silicide layer on at least one of at least regions of one principal surface of the second semiconductor substrate, to which portions of said one principal surface of the first semiconductor substrate exposed between the gate regions are opposite, and said one principal surface portions of the first semiconductor substrate exposed between the gate regions; and
joining said one principal surface of the first semiconductor substrate to said one principal surface of the second semiconductor substrate through the metal layer and/or the metal silicide layer.

5,702,963

METHOD OF FORMING HIGH DENSITY ELECTRONIC CIRCUIT MODULES

Duy-Pach Vu, Taunton; Brenda Dingle, Mansfield, and Ngwe Cheong, Boston, all of Mass., assignors to Kopin Corporation, Taunton, Mass.

Division of Ser. No. 874,588, Apr. 24, 1992, Pat. No. 5,376,561, which is a continuation-in-part of Ser. No. 834,849, Feb. 13, 1992, Pat. No. 5,258,325, which is a continuation-in-part of Ser. No. 636,602, Dec. 31, 1990, Pat. No. 5,206,749. This application Nov. 2, 1994, Ser. No. 333,226

Int. Cl.^{6} H01L *21/265*

U.S. Cl. 437—41 GS **34 Claims**

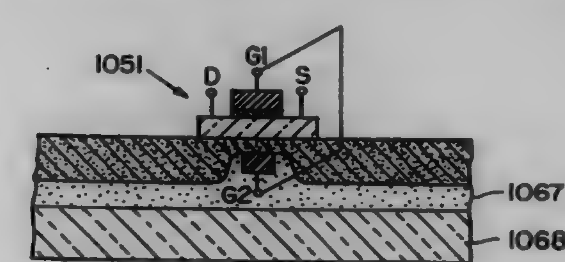

1. A method of fabricating a double gate MOSFET device comprising:
providing a layer of silicon over a insulating layer;
doping the silicon layer to produce a source region and a drain region each of a first conductivity type separated by a channel region of a second conductivity type such that conductivity junctions exist between the source and channel regions and between the drain and channel regions;
forming a first gate over the channel region of the silicon layer;
attaching conductive contacts to the source, drain and first gate;
removing a region of the insulating layer to expose a backside region of the silicon layer;
forming a second gate adjacent the backside region of the silicon layer over the channel region opposite the first gate; and
attaching a conductive contact to the second gate.

5,702,964

METHOD FOR FORMING A SEMICONDUCTOR DEVICE HAVING A FLOATING GATE

Byung-Il Lee, Daejeon-si, Rep. of Korea, assignor to LG Semicon, Co., Ltd., Chungcheongbuk-do, Rep. of Korea

Filed Oct. 17, 1995, Ser. No. 544,317

Int. Cl.^{6} H01L *21/265;21/8247*

U.S. Cl. 437—43 **20 Claims**

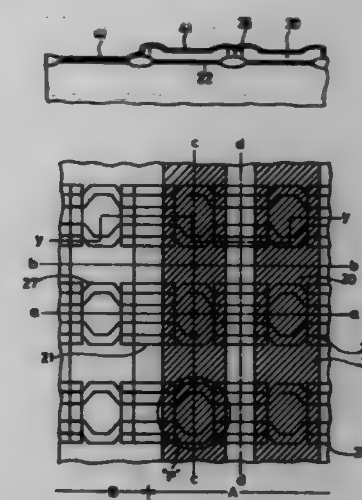

1. A method for forming of a semiconductor device including a transistor having a floating gate, comprising the steps of:
(a) forming a first insulating layer and a first conductive layer on a surface of the substrate;
(b) patterning the first conductive layer on a cell forming area for forming preliminary floating gate electrodes spaced by a distance and implanting ions on the cell forming area;
(c) forming a second insulating layer on the resulting surface formed after step (b) and etching the second insulating layer so that the second insulating layer remains on a side wall of the preliminary floating gate electrodes and fills the distance between preliminary floating gate electrodes;
(d) forming a third insulating layer on the resulting surface formed after step (c);
(e) forming a second conductive layer on the third insulating layer;
(f) forming a fourth insulating layer on the second conductive layer;
(g) forming gate electrode patterns by patterning the fourth insulating layer and the second conductive layer, wherein the gate electrode patterns have a first distance between the gate patterns in a portion to be a contact hole, and a second distance between the gate patterns is arranged in another portion, the first distance being wider than the second distance;
(h) forming a floating gate electrode by patterning the third insulating layer and the preliminary floating gate electrodes using the gate electrode patterns as a mask;
(i) forming source and drain regions by ion implantation;
(j) forming a fifth insulating layer and anisotropically etching the fifth insulating layer for forming a contact hole; and
(k) filling the contact hole with a third conductive layer, and patterning the third conductive layer into wiring.

5,702,965

FLASH MEMORY CELL AND METHOD OF MAKING THE SAME

Jeoung Woo Kim, Kyungki-Do, Rep. of Korea, assignor to Hyundai Electronics Industries Co., Ltd., Kyungki-Do, Rep. of Korea

Filed Jun. 19, 1996, Ser. No. 666,013

Claims priority, application Rep. of Korea, Jun. 24, 1995, 95-17272

Int. Cl.[6] H01L *21/265;21/70;27/00;21/02*

U.S. Cl. 47—43 12 Claims

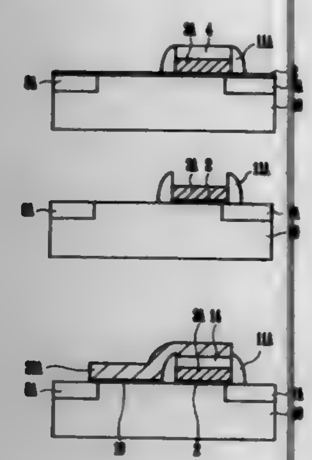

1. A method of making a flash memory cell in a semiconductor device, comprising:

sequentially forming a tunnel oxide film, a first polysilicon layer and an oxide film on a silicon substrate;

patterning said oxide film and said first polysilicon layer to form a floating gate on said substrate;

forming source and drain regions in said silicon substrate;

forming an insulating film on said tunnel oxide film, said first polysilicon layer and said oxide film after forming said source and drain regions, and forming an insulating film spacer at side walls of said oxide film and floating gate through an isotropic etching process, said insulating film having an ONO structure in which an underlying oxide film, a nitride film and an upper oxide film are sequentially stacked;

removing a portion of said oxide film remaining on said floating gate and performing a thermal oxidation process so as to form a select-gate oxide film on the exposed silicon substrate and a dielectric film on said floating gate;

forming a second polysilicon layer on said select-gate oxide film, said insulating film spacer and said dielectric film; and patterning said second polysilicon layer to form a control gate.

5,702,966

METHOD OF MANUFACTURING A SEMICONDUCTOR MEMORY DEVICE

Junichiro Noda, Tokyo, and Daisuke Tohyama, Kawasaki, both of Japan, assignors to Kabushiki Kaisha Toshiba, Kawasaki, Japan

Division of Ser. No. 351,185, Nov. 30, 1994, Pat. No. 5,596,529. This application Oct. 16, 1996, Ser. No. 732,669

Claims priority, application Japan, Nov. 30, 1993, 5-299951

Int. Cl.[6] H01L *21/65;21/8247*

U.S. Cl. 437—43 4 Claims

1. A method of manufacturing a nonvolatile semiconductor memory device containing a select MOS transistor and a data storage MOS transistor, comprising the steps of:

forming a first region by implanting impurities of a second conductivity type into an element region of a semiconductor substrate of a first conductivity type;

forming a first insulating film in said element region;

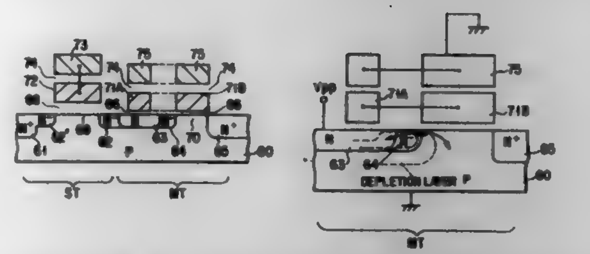

removing said first insulating film on said first region and a region adjacent to said first region;

forming a second insulating film thicker than said first insulating film on said semiconductor substrate exposed in said element region;

forming a first conducting film on said first and second insulating films;

forming a hole in a position of said first conducting film;

forming a third insulating film on first conductive film and in the hole;

forming a second conducting film on said third insulating film;

etching said second conducting film, said third insulating film, said first conducting film, said second insulating film, and said first insulating film in sequence, so as to form a gate electrode of said select MOS transistor and a control gate electrode and a floating-gate electrode of said data storage MOS transistor, said control gate electrode and said floating-gate electrode having a first portion and a second portion above said element region, said first portion being placed above said first region, and said first portion and said second portion being spaced apart on said element region and connected to each other on a field region; and

implanting impurities of a second conductivity type into said element region with the gate electrode of said select MOS transistor and the control gate electrode and floating-gate electrode of said data storage MOS transistor as a mask, so as to form a second region in said element region between said first portion and said second portion and a third region in said element region between said first portion and the gate electrode of said select MOS transistor.

5,702,967

METHOD OF FABRICATING A DEEP SUBMICRON MOSFET DEVICE USING A RECESSED, NARROW POLYSILICON GATE STRUCTURE

Horng-Huei Tseng, Hsinchu, Taiwan, assignor to Vanguard International Semiconductor Corporation, Hsin-Chu, Taiwan

Filed Jul. 22, 1996, Ser. No. 684,804

Int. Cl.[6] H01L *21/266*

U.S. Cl. 437—45 24 Claims

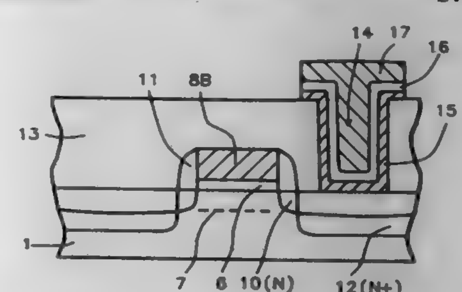

1. A method of fabricating a MOSFET device, on a semiconductor substrate, with a narrow polysilicon gate structure self aligned to a narrow, local threshold voltage adjust region, comprising the steps of:

depositing a first insulator layer on said semiconductor substrate;

forming a photoresist pattern on said first insulator layer, with a narrow opening in said photoresist pattern, exposing top surface of said first insulator layer;

forming a narrow hole opening, in said first insulator layer, by removing said first insulator layer from narrow opening in said photoresist pattern;

removal of said photoresist layer;

thermal oxidation to grow a second insulator layer, to be used as a gate insulator layer, on the surface of said semiconductor substrate, exposed in said narrow hole opening;

ion implanting a first conductivity imparting dopant, through said second insulator layer, and into an area of said semiconductor substrate, defined by said narrow hole opening, to create said narrow local threshold adjust region;

depositing a polysilicon layer, on top surface of said first insulator layer, and completely filling said narrow hole opening;

oxidation to convert said polysilicon layer, on top surface of said first insulator layer, to a silicon oxide layer, while converting a top portion of said polysilicon layer, in said narrow hole opening, to said silicon oxide layer, leaving bottom portion of said polysilicon layer, in said narrow hole opening, unoxidized, resulting in formation of said narrow polysilicon gate structure, recessed in said narrow hole opening, self aligned to underlying said narrow local threshold voltage adjust region;

removal of said silicon oxide layer, from top surface of said first insulator layer, and from top surface of said narrow polysilicon gate structure, recessed in said narrow hole opening;

removal of said first insulator layer;

ion implanting a second conductivity imparting dopant into an area of said semiconductor substrate, not covered by said narrow polysilicon gate structure, to form a lightly doped source and drain region;

depositing a third insulator layer on said semiconductor substrate, and on said narrow polysilicon gate structure;

anisotropic etching of said third insulator layer, to form an insulator spacer on the sides of said narrow polysilicon gate structure;

ion implanting a third conductivity imparting dopant into an area of said semiconductor substrate, not covered by said narrow polysilicon gate structure, and not covered by said insulator spacer, to form a heavily doped source and drain region;

depositing a fourth insulator layer on said semiconductor substrate, and on said narrow polysilicon gate structure;

opening a contact hole in said fourth insulator layer, to expose top surface of said heavily doped source and drain region, and to expose top surface of said narrow polysilicon gate structure;

depositing a composite metal layer on top surface of said fourth insulator layer, on top surface of said heavily doped source and drain region, and on top surface of said narrow polysilicon gate structure, exposed in said contact hole; and

patterning of said composite metal layer, to form a composite metal contact structures to said heavily doped source and drain region, and to said narrow polysilicon gate structure.

5,702,968

METHOD FOR FABRICATING A HONEYCOMB SHAPED CAPACITOR

Chung-Zen Chen, Hsinchu, Taiwan, assignor to Vanguard International Semiconductor Corporation, Hsin-Chu, Taiwan

Filed Jan. 11, 1996, Ser. No. 585,067

Int. Cl.[6] H01L *21/70*

U.S. Cl. 437—52 17 Claims

1. A method of fabricating a integrated semiconductor memory device having a honeycomb shaped capacitor, the method comprises the steps of:

forming a metal oxide semiconductor (MOS) device having a source and drain, adjacent to a field oxide region, in a silicon substrate;

forming a first planarization layer over said MOS device and said field oxide region;

etching a node contact hole though said first planarization layer exposing said source;

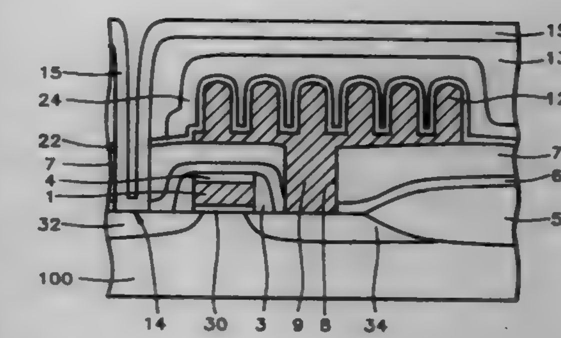

forming a first polysilicon layer on said first planarization layer and in said node contact hole;

forming a first insulation layer composed of silicon oxide covering said first polysilicon layer;

forming a second polysilicon layer, consisting of grains, over said first insulation layer; said grains of said second polysilicon layer have a diameter in a range between about 500 and 1500 Å; said second polysilicon layer consisting of grains; is formed by depositing a conformal polysilicon layer over said first insulation layer; and annealing said conformal polysilicon layer;

said conformal polysilicon layer is deposited using He-diluted SiH_4 at a percentage between about 10 and 30%; at a pressure in a range between about 0.5 and 2 Torr; and at a temperature in a range between about 550° to 590° C.;

the annealing of said conformal polysilicon layer comprises a two step anneal process: a first step having an oxygen partial pressure in a range between about 1E-5 and 5E-5 Torr for a time in a range between about 30 and 90 seconds and a temperature in a range between about 550° and 590° C.; and a second step having an oxygen partial pressure in a range between about 1E-7 and 3E-7 Torr for a time in a range between about 20 and 40 minutes and a temperature in a range between about 550° and 590° C.;

anisotropically etching said first insulation layer using said grains of said second polysilicon layer as a mask forming a pattern of vertical extensions of said first insulation layer;

forming a third polysilicon layer over said grains of said second polysilicon layer and said pattern of vertical extensions;

etching back said third polysilicon layer and said grains of said second polysilicon layer to expose tops of said vertical extensions of said first insulation layer;

selectively etching said vertical extensions of said first insulation layer forming holes in place of said vertical extensions in said third polysilicon layer thereby forming the third polysilicon layer into a honeycomb structure;

patterning said first polysilicon layer and said third polysilicon layer forming a honeycomb shaped bottom storage electrode over said source;

forming a capacitor dielectric layer over said bottom storage electrode; and

forming a top plate electrode over said capacitor dielectric layer thereby forming said memory device having said honeycomb shaped capacitor.

5,702,969

BURIED BIT LINE DRAM CELLS AND FABRICATING METHODS THEREFOR

Kang-yoon Lee, Suwon, Rep. of Korea, assignor to Samsung Electronics Co., Ltd., Suwon, Rep. of Korea

Filed Apr. 24, 1996, Ser. No. 637,223

Claims priority, application Rep. of Korea, Apr. 25, 1995, 95-9794

Int. Cl.[6] H01L *21/70*

U.S. Cl. 437—52 12 Claims

1. A method of fabricating an integrated circuit dynamic random access memory (DRAM) cell, comprising the steps of:

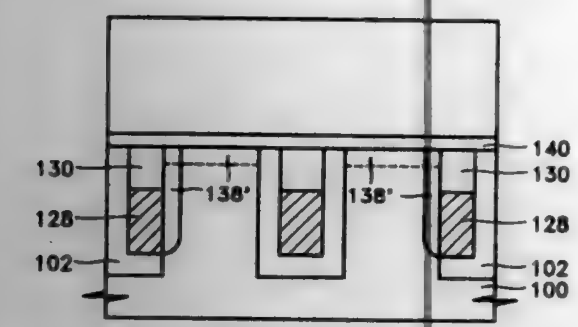

forming a DRAM cell active region in a substrate, said DRAM cell active region including a protruding tap extending therefrom;
forming a device isolation region in said substrate, outside said DRAM cell active region; and
forming a buried bit line in said device isolation region, which projects through said device isolation region to electrically contact said tap.

5,702,970
METHOD FOR FABRICATING A CAPACITOR OF A SEMICONDUCTOR DEVICE
Kyeong Keun Choi, Kyoungki-do, Rep. of Korea, assignor to Hyundai Electronics Industries Co., Ltd., Ichon-kun, Rep. of Korea
Filed Jun. 26, 1996, Ser. No. 670,592
Claims priority, application Rep. of Korea, Jun. 26, 1995, 95-17479; Jun. 30, 1995, 95-18911; Jun. 30, 1995, 95-18912
Int. Cl.[6] **H01L** *21/70*
U.S. Cl. 437—52 **9 Claims**

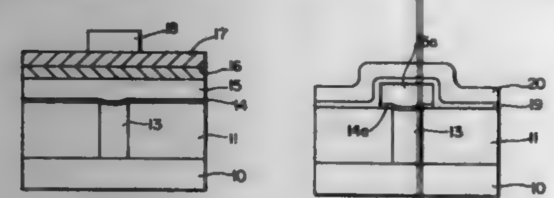

1. A method for fabricating a capacitor of a semiconductor device, the method comprising the steps of:
preparing a semiconductor substrate;
forming an insulating layer on said semiconductor substrate;
forming a contact hole, which exposes said semiconductor substrate, by selectively eliminating said lower insulating layer;
forming a plug in said contact hole;
forming a titanium/titanium nitride film on said plug and said lower insulating layer;
forming a first ruthenium oxide film on said titanium/titanium nitride film;
forming a first spin on glass film on said first ruthenium oxide film;
implanting a impurities into a surface of said first spin on glass film;
forming a second spin on glass film on said first spin on glass film, and then selectively eliminating said first and said second spin on glass films;
etching said first ruthenium oxide film and said titanium/titanium nitride film by utilizing said second and said first spin on glass films as a mask;
eliminating said second and said first spin on glass films, and then forming a dielectric film on an exposed surface of said first ruthenium oxide film, said titanium/titanium nitride film, and said lower insulating layer, the dielectric film having a specific dielectric constant; and
forming a second ruthenium oxide film on said dielectric film.

5,702,971
SELF-ALIGNED LOD ANTIBLOOMING STRUCTURE FOR SOLID-STATE IMAGERS
Eric G. Stevens, Rochester, N.Y., assignor to Eastman Kodak Company, Rochester, N.Y.
Filed Mar. 31, 1995, Ser. No. 414,545
Int. Cl.[6] **H01L** *31/18;21/265;27/00;21/70*
U.S. Cl. 437—53 **9 Claims**

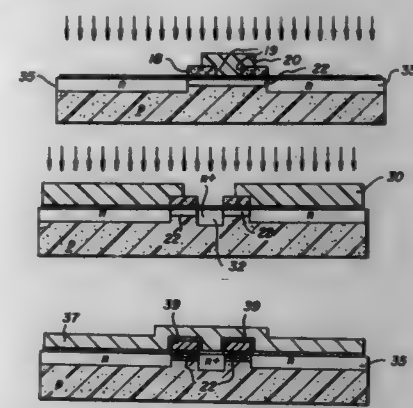

1. A method of manufacturing an antiblooming structure for image sensors comprising the steps of:
providing a semiconductor substrate of a first conductivity type, having an antiblooming channel implant of a second conductivity type opposite the first conductivity type on a major surface of the substrate in a laterally uniform manner across a pixel area;
placing a gate oxide upon the surface of the substrate;
defining a first masking pattern and a second masking pattern, upon the gate oxide of the substrate, the first masking pattern covering an antiblooming barrier region, the antiblooming barrier region having an inner edge and an outer edge, and the second masking pattern covering a drain region, such that the combination of the first masking pattern and second masking pattern leave an exposed area defining a CCD buried channel;
implanting within the exposed area of the CCD buried channel a material of the second conductivity type that is self aligned to the outer edges of the first masking layer;
removing the second masking layer that covers the drain region;
creating, by masking, a third pattern that exposes only the drain region and portions of the first pattern adjacent to the drain region;
implanting the drain region with the second conductivity type to form a drain that is self aligned with the inner edges the antiblooming barrier region; and
removing remaining portions of the first and the third masking layers; and
creating a gate electrode over the substrate.

5,702,972
METHOD OF FABRICATING MOSFET DEVICES
Chaochieh Tsai, Taichung; Shun-Liang Hsu, and Shaulin Shue, both of Hsin-Chu, all of Taiwan, assignors to Taiwan Semiconductor Manufacturing Company Ltd., Hsin-Chu, Taiwan
Filed Jan. 27, 1997, Ser. No. 789,716
Int. Cl.[6] **H01L** *21/8238*
U.S. Cl. 437—56 **20 Claims**

1. A method of reducing source and drain resistance in the fabrication of an integrated circuit device comprising the steps of:
providing gate electrodes on the surface of a semiconductor substrate;
implanting lightly doped regions into said semiconductor substrate using said gate electrodes as a mask;
forming first insulating spacers on the sidewalls of said gate electrodes;
forming second insulating spacers on the sidewalls of said first spacers;

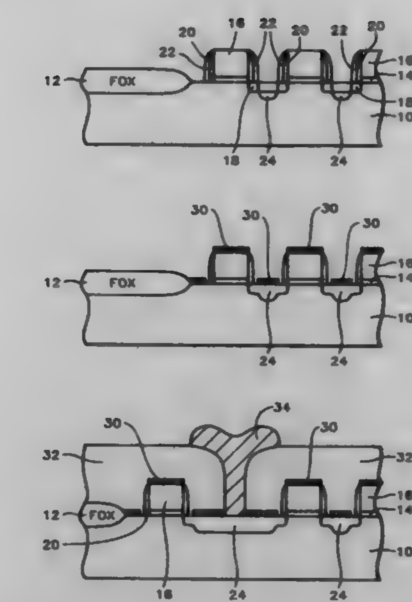

implanting heavily doped source and drain regions into said semiconductor substrate using said gate electrodes and said first and second spacers as a mask;
thereafter removing said second spacers;
depositing by chemical vapor deposition a titanium layer over said substrate whereby titanium silicide is formed overlying said gate electrodes and overlying said source and drain regions and whereby elemental titanium is deposited overlying said first spacers wherein said titanium silicide overlying said source and drain regions reduces said source and drain resistance;
removing said elemental titanium; and
completing the fabrication of said integrated circuit device, including the step of depositing an insulating layer overlying said gate electrodes and said titanium silicide.

5,702,973
METHOD FOR FORMING EPITAXIAL SEMICONDUCTOR WAFER FOR CMOS INTEGRATED CIRCUITS
Kiyoshi Mitani, Isobe, Japan, and Witiwat Wijaranakula, Vancouver, Wash., assignors to SEH America, Inc., Vancouver, Wash.
Division of Ser. No. 212,227, Mar. 14, 1994, abandoned, which is a continuation-in-part of Ser. No. 56,816, Apr. 28, 1993, Pat. No. 5,306,939, which is a continuation of Ser. No. 913,777, Jul. 14, 1992, abandoned, which is a continuation of Ser. No. 684,692, Apr. 12, 1991, abandoned, which is a continuation-in-part of Ser. No. 505,056, Apr. 5, 1990, abandoned. This application Jun. 7, 1995, Ser. No. 477,997
Int. Cl.[6] **H01L** *21/70*
U.S. Cl. 437—57 **21 Claims**

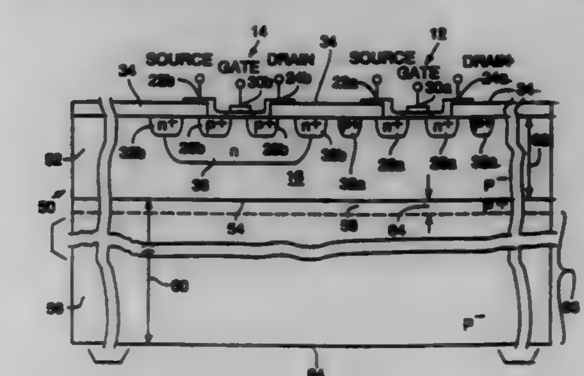

1. A method of forming a CMOS semiconductor wafer on which CMOS integrated circuits are formed in an epitaxial layer of semiconductor material positioned on a major surface region of a semiconductor substrate, comprising:
forming the semiconductor substrate by Czochralski processing to have an electrically active dopant concentration of no less than 2×10^{14} atoms/cm^3;
before the epitaxial layer of semiconductor material is formed on the major surface region of a semiconductor substrate, forming a thin, high conductance diffused layer extending into the semiconductor substrate from the major surface region and being continuous across the entire major surface region of the substrate, the electrically active dopant concentration of the substrate cooperating with the high conductance of the diffused layer to provide across the diffused layer a built-in voltage that prevents latch-up in CMOS circuits formed on the semiconductor wafer; and
measuring the concentration of interstitial oxygen in the CMOS semiconductor wafer before and after formation of CMOS integrated circuits on the semiconductor wafer.

5,702,974
METHOD FOR FABRICATING CAPACITOR OF SEMICONDUCTOR DEVICE
Jeong Ho Kim, Kyoungki-do, Rep. of Korea, assignor to Hyundai Electronics Industries Co., Ltd., Kyoungki-do, Rep. of Korea
Continuation of Ser. No. 503,497, Jul. 18, 1995, abandoned. This application Feb. 3, 1997, Ser. No. 790,863
Claims priority, application Rep. of Korea, Jul. 18, 1994, 94-17301
Int. Cl.[6] **H01L** *21/70*
U.S. Cl. 437—60 **6 Claims**

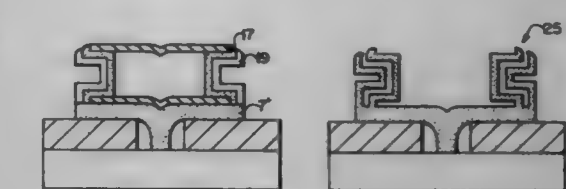

1. A method for fabricating a capacitor of a semiconductor device, comprising the steps of:
forming a lower insulating layer on a semiconductor substrate;
forming a contact hole in the lower insulating layer by use of a contact mask so that the semiconductor substrate is partially exposed through the contact hole;
forming an insulating film spacer at the side wall of the contact hole;
depositing a first conductive layer over the resulting structure, the first conductive layer being partially contacted through the contact hole;
sequentially depositing first, second and third sacrificial films over the first conductive layer, wherein the second sacrificial film has a higher etch rate compared to the first and third sacrificial films;
subjecting the third, the second and first sacrificial films to etch under a storage electrode mask;
laterally etching the second sacrificial film so that the second sacrificial film has a width less than that of the first and third sacrificial films;
depositing a second conductive layer over the resulting structure so that the second conductive layer includes a groove formed by the width difference between the second sacrificial film and the first and third sacrificial films;
subjecting the second conductive layer to anisotropic etch, to form a second conductive layer spacer having a groove corresponding to the groove in the second conductive layer;
depositing an oxide film over the structure resulting from said step of subjecting the second conductive layer to anisotropic

etch, so that the oxide film includes a groove corresponding to the groove in the second conductive spacer;
anisotropically overetching the oxide film and etching a portion of the first conductive layer to form an oxide film spacer having a groove corresponding to the groove in the oxide film and a first conductive layer pattern;
depositing a third conductive layer over the structure resulting from said step of anisotropically overetching the oxide film and etching a portion of the first conductive layer, so that the third conductive layer includes a groove corresponding to the groove in the oxide film spacer,
subjecting the third conductive layer to anisotropic etch, to form a third conductive layer spacer having a groove corresponding to the groove in the oxide film spacer; and
removing the first, second and third sacrificial films and the oxide film spacer by wet etch so that the second and third conductive layer spacers are spaced apart, to form a cylindrical storage electrode having sidewalls with an increased surface area provided by the space between the second and third conductive layer spacers and the grooves formed in the second and third conductive layer spacers.

5,702,975
METHOD FOR ISOLATING SEMICONDUCTOR DEVICE
Hyung-Sup Yoon; Jin-Hee Lee; Chul-Sun Park, and Kwang-Eui Pyun, all of Daejeon, Rep. of Korea, assignors to Electronics and Telecommunications Research Institute, Daejeon, Rep. of Korea
Filed Sep. 25, 1996, Ser. No. 719,876
Claims priority, application Rep. of Korea, Nov. 8, 1995, 95-40297
Int. Cl.^{6} H01L *21/302*
U.S. Cl. 437—61 **5 Claims**

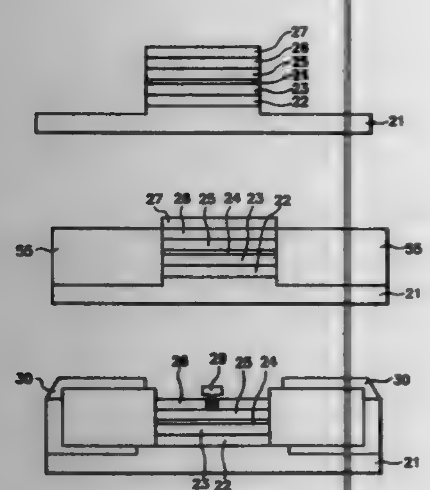

1. A method for isolating a semiconductor device, comprising the steps of:
(a) sequentially growing a plurality of material layers on a semiconductor substrate;
(b) etching said material layers down to a predetermined depth of said substrate, to thereby define an active region using double insulating film mask comprised of a oxide and a nitride film;
(c) forming a semi-insulating film on said exposed semiconductor substrate in order to planarize the step-difference of said active region and an isolation region; and
(d) forming an ohmic metal layer on a space where said semi-insulating film is regrown.

5,702,976
SHALLOW TRENCH ISOLATION USING LOW DIELECTRIC CONSTANT INSULATOR
Klaus F. Schuegraf, and Aftab Ahmad, both of Boise, Id., assignors to Micron Technology, Inc., Boise, Id.
Filed Oct. 24, 1995, Ser. No. 547,620
Int. Cl.^{6} H01L *21/76*
U.S. Cl. 437—67 **22 Claims**

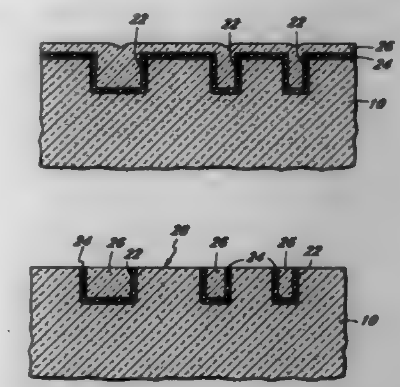

13. A method of reducing the formation of voids in a refilled trench isolation process comprising the steps of:
forming trenches having an aspect ratio less than 2:1; and
refilling the trenches with a material having a dielectric constant less than the dielectric constant of silicon dioxide,
wherein the refilling material comprises a Fluorine-doped silicon dioxide composition.

5,702,977
SHALLOW TRENCH ISOLATION METHOD EMPLOYING SELF-ALIGNED AND PLANARIZED TRENCH FILL DIELECTRIC LAYER
Syun-Ming Jang, Hsin-Chu; Ying-Ho Chen, Taipei, and Chen-Hua Yu, Hsin-Chu, all of Taiwan, assignors to Taiwan Semiconductor Manufacturing Company, Ltd., Hsin-Chu, Taiwan
Filed Mar. 3, 1997, Ser. No. 810,390
Int. Cl.^{6} H01L *21/76*
U.S. Cl. 437—67 **20 Claims**

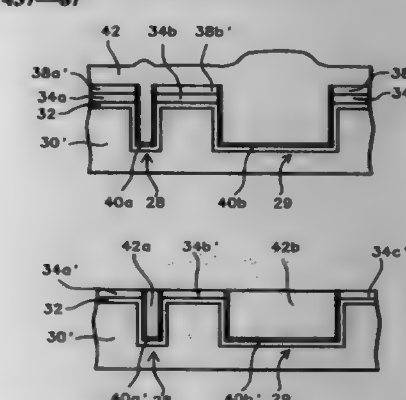

1. A method for forming and planarizing a trench fill layer within a trench within an integrated circuit comprising:
providing a substrate, the substrate having a trench formed therein;
forming upon the substrate at regions other than those within the trench a first integrated circuit layer, the first integrated circuit layer having a composition which inhibits formation upon the first integrated circuit layer of a trench fill layer which is subsequently formed upon the substrate and within the trench;
forming within the trench but not upon the substrate at regions other than those within the trench a second integrated circuit layer, the second integrated circuit layer having a composition

which promotes formation within the trench of the trench fill layer which is subsequently formed upon the substrate and within the trench; and
forming upon the substrate and within the trench the trench fill layer, the trench fill layer being formed to a thickness over the trench such that when the trench fill layer is planarized through a chemical mechanical polish (CMP) planarizing method there is avoided formation of a dish within a planarized trench fill layer formed within the trench.

5,702,978
SLOPED SILICON NITRIDE ETCH FOR SMOOTHER FIELD OXIDE EDGE
Calvin T. Gabriel, Cupertino, and Olivier F. Laparra, San Jose, both of Calif., assignors to VLSI Technology, Inc., San Jose, Calif.
Filed Apr. 30, 1996, Ser. No. 640,092
Int. Cl.^{6} H01L *21/76*
U.S. Cl. 437—65 **8 Claims**

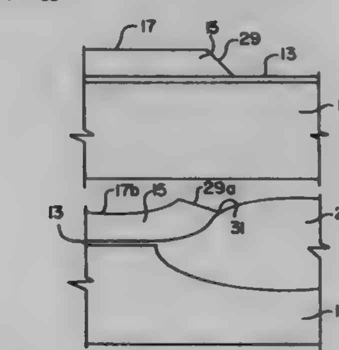

6. A method for providing a smooth field oxide edge in the fabrication of an integrated circuit on a substrate comprising the steps of:
depositing a layer of nitride on the substrate; and
etching said layer of nitride with gas selected from the group consisting of a) CHF_3+CF_4 and b) $CHF_3+C_2F_6$ so as to produce an edge surface at an angle of between 30° and 80° with the plane of the substrate.

5,702,979
METHOD OF FORMING A LANDING PAD STRUCTURE IN AN INTEGRATED CIRCUIT
Tsiu C. Chan, Carrollton; Frank R. Bryant, Denton, and Loi N. Nguyen, Carrollton, all of Tex., assignors to SGS-Thomson Microelectronics, Inc., Carrollton, Tex.
Continuation-in-part of Ser. No. 251,025, May 31, 1994, Pat. No. 5,633,196. This application Dec. 22, 1994, Ser. No. 361,760
Int. Cl.^{6} H01L *21/44*
U.S. Cl. 437—187 **35 Claims**

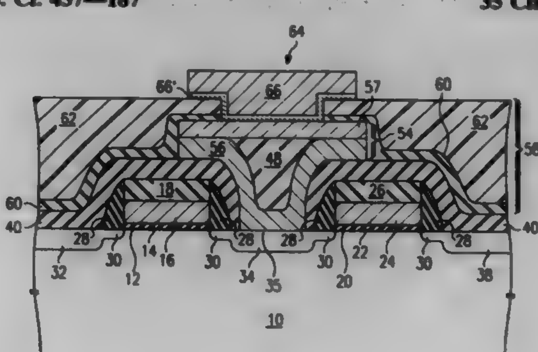

1. A method of forming a portion of a semiconductor integrated circuit; comprising the steps of:
forming an active region on a substrate;
forming a first dielectric layer having a first opening therethrough exposing a portion of the active region;
forming a first conductive layer in the first opening and on a portion of the first dielectric layer adjacent the first opening;
forming a dielectric pocket over a portion of the first conductive layer overlying the active region;
forming a second conductive layer over the first conductive layer and the dielectric pocket; and
etching the first and the second conductive layers to form a landing pad in the first opening and over a portion of the first dielectric layer comprising the first and second conductive layers and the dielectric pocket.

5,702,980
METHOD FOR FORMING INTERMETAL DIELECTRIC WITH SOG ETCHBACK AND CMP
Chen-Hua Douglas Yu, and Sylin-Ming Jang, both of Hsin-Chu, Taiwan, assignors to Taiwan Semiconductor Manufacturing Company Ltd, Hsin-Chu, Taiwan
Filed Mar. 15, 1996, Ser. No. 616,415
Int. Cl.^{6} H01L *21/28*
U.S. Cl. 437—187 **10 Claims**

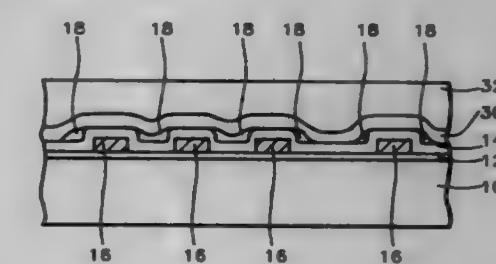

1. A method of forming intermetal dielectric, comprising the steps of:
providing a semiconductor substrate having devices formed therein;
providing a layer of base dielectric formed on said semiconductor substrate;
providing an electrode pattern formed on said layer of base dielectric;
forming an oxide underlayer over said layer of base dielectric and said electrode pattern;
forming a layer of spin-on-glass on said oxide underlayer;
etching back said layer of spin-on-glass wherein said spin-on-glass is removed from that part of said oxide underlayer directly over said electrode pattern;
forming an oxide cap layer over said oxide underlayer and that part of said layer of spin-on-glass remaining after etching back said layer of spin-on-glass, wherein said oxide cap layer is formed using plasma enhanced chemical vapor deposition with silane and oxygen;
forming an intermetal oxide layer over said oxide cap layer, wherein said intermetal oxide layer is formed using plasma enhanced deposition of tetra-ethyl-ortho-silicate; and
planarizing said intermetal oxide layer.

5,702,981
METHOD FOR FORMING A VIA IN A SEMICONDUCTOR DEVICE
Papu D. Maniar, 12618 Olympiad Dr., Austin, Tex. 78759; Roc Blumenthal, 6103 Colina La., Austin, Tex. 78759; Jeffrey L. Klein, 7511 Step Down Cove, Austin, Tex. 78731, and Wei Wu, 7701 Yaupon Dr., Austin, Tex. 78729
Filed Sep. 29, 1995, Ser. No. 536,537
Int. Cl.^{6} H01L *21/44*
U.S. Cl. 437—192 **20 Claims**

1. A method for making a semiconductor device comprising the steps of:

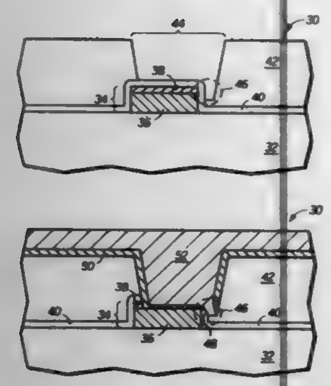

providing a semiconductor substrate having a conductive interconnect, the conductive interconnect having a top surface and a sidewall;
depositing a blanket etch stop layer over the semiconductor substrate and adjacent the sidewall of the conductive interconnect;
depositing a dielectric layer on the blanket etch stop layer;
etching a via in the dielectric layer over the conductive interconnect using a dry etch chemistry, and stopping on the blanket etch stop layer to create an exposed portion of the blanket etch stop layer;
removing the exposed portion of the blanket etch stop layer within the via while maintaining a sidewall portion of the blanket etch stop layer adjacent the sidewall of the conductive interconnect; and
filling the via with a conductive material using a gaseous source which includes fluorine to establish an electrical contact to the conductive interconnect without exposing the sidewall of the conductive interconnect to the gaseous source.

5,702,982
METHOD FOR MAKING METAL CONTACTS AND INTERCONNECTIONS CONCURRENTLY ON SEMICONDUCTOR INTEGRATED CIRCUITS

Chung-Kuang Lee; Jung-Hsien Hsu, and Pin-Nan Tseng, all of Hsin-chu, Taiwan, assignors to Taiwan Semiconductor Manufacturing Company, Ltd., Hsin-Chu, Taiwan
Filed Mar. 28, 1996, Ser. No. 623,438
Int. Cl.⁶ H01L *21/44*
U.S. Cl. 437—195 **32 Claims**

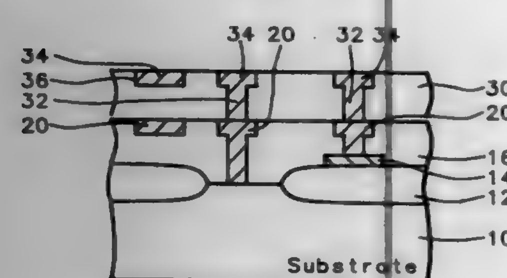

1. A method for fabricating electrical interconnection and buried metal plug structures, concurrently, on a semiconductor substrate, comprising the steps of:
providing a semiconductor substrate having device areas and field oxide areas, and further having semiconductor devices in said device areas with device contact areas;
depositing a blanket insulating layer composed of an inorganic material on said semiconductor device areas, said insulating layer having a planar surface over said substrate;
masking and anisotropically plasma etching contact openings in said insulating layer to said device contact areas;
coating a photoresist layer on said insulating layer and filling said contact openings, said photoresist layer having a planar surface over said contact openings;
patterning said photoresist layer on said insulating layer and forming a photoresist etch mask for etching trenches in said insulating layer extending over said contact openings, and leaving a portion of said photoresist layer in said contact openings; anisotropically plasma etching said trenches extending partially into said insulating layer, said photoresist in said contact openings protecting said device contact areas from being etched;
plasma ashing and thereby completely removing said patterned photoresist layer and portions of said photoresist in said contact openings;
depositing a conformal metal layer, and filling said trenches and said contact openings in said insulating layer, said metal layer deposited to a thickness that forms a planar surface over said trenches;
blanket removing said metal layer to the surface of said insulating layer, and thereby leaving metal in said trenches and in said contact openings, said metal in said trenches and in said contact openings being coplanar with the surface of said insulating layer, and thereby completing said electrical interconnections and metal plug structures.

5,702,983
METHOD FOR MANUFACTURING A SEMICONDUCTOR DEVICE WITH A METALLIC INTERCONNECTION LAYER

Kenji Shinohara, Kanagawa, Japan, assignor to Sony Corporation, Tokyo, Japan
Continuation of Ser. No. 332,736, Nov. 1, 1994, abandoned. This application Jun. 28, 1996, Ser. No. 671,952
Claims priority, application Japan, Nov. 2, 1993, 5-297389
Int. Cl.⁶ H01L *21/44*
U.S. Cl. 437—195 **6 Claims**

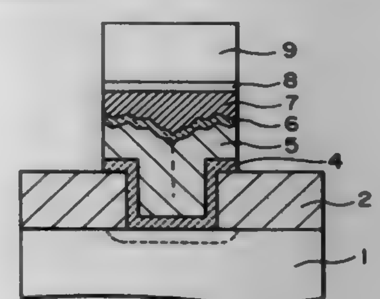

1. A method for manufacturing a semiconductor device with a built-up metallic interconnection layer comprising the steps of:
providing a substrate with a surface;
forming an insulating layer on the surface;
forming a contact hole having a diameter in the insulating layer to expose a selected portion of the substrate;
forming a first bonding layer on the insulating layer and contact hole;
forming a tungsten interconnection layer on the first bonding layer having a thickness not less than 50% of the diameter of the contact hole and completely filling the contact hole;
forming a second bonding layer on the tungsten interconnection layer without etching back the tungsten interconnection layer;
forming a metallic interconnection layer selected from aluminum and alloys of aluminum with at least one of Si, Cu and Ti on the second bonding layer to form a built-up interconnection layer; and
subjecting the built-up interconnection layer to elevated temperatures of from about 400° C. to about 500° C. under a reduced pressure less than atmospheric pressure for a time sufficient to reflow the metallic interconnection layer without melting the metallic interconnection layer to provide a built-up interconnection layer having a smooth surface.

5,702,984
INTEGRATED MULITCHIP MEMORY MODULE, STRUCTURE AND FABRICATION

Claude Louis Bertin; Wayne John Howell, both of South Burlington; Erik Leigh Hedberg, Essex Junction; Howard Leo Kalter, Colchester, and Gordon Arthur Kelley, Jr., Essex Junction, all of Vt., assignors to International Business Machines Corporation, Armonk, N.Y.
Continuation of Ser. No. 414,841, Mar. 31, 1995, abandoned, which is a division of Ser. No. 120,876, Sep. 13, 1993, Pat. No. 5,502,667. This application Nov. 14, 1996, Ser. No. 749,124
Int. Cl.⁶ H01L *21/18*
U.S. Cl. 437—208 **20 Claims**

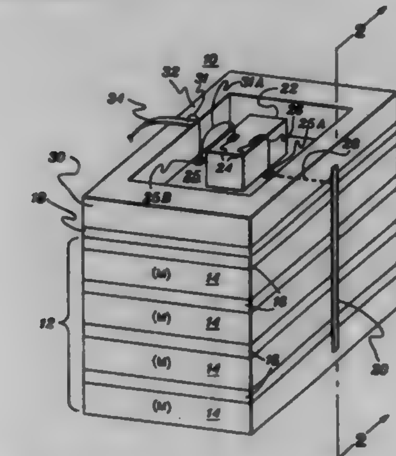

1. A method for fabricating an integrated multichip memory module which functionally emulates a single memory chip architecture, said fabrication method comprising the steps of:
(a) providing N memory chips, wherein N≧2, each memory chip having M memory devices, along with two substantially parallel planar main surfaces and an edge surface, each memory chip having a first single memory chip architecture;
(b) forming a memory subunit by securing said N memory chips together such that at lust one planar main surface of each memory chip is coupled to a planar main surface of an adjacent memory chip; and
(c) providing and electrically connecting control logic to the memory subunit, wherein said control logic electrically connects with each of the N memory chips and coordinates communication with the memory subunit so that an integrated memory architecture exists which emulates a second single memory chip architecture having single chip loading on signal lines.

5,702,985
HERMETICALLY SEALED CERAMIC INTEGRATED CIRCUIT HEAT DISSIPATING PACKAGE FABRICATION METHOD

Carmen D. Burns, Austin, Tex., assignor to Staktek Corporation, Austin, Tex.
Division of Ser. No. 905,587, Jun. 26, 1992, abandoned. This application Oct. 19, 1994, Ser. No. 325,719
Int. Cl.⁶ H01L *21/60*
U.S. Cl. 437—217 **56 Claims**

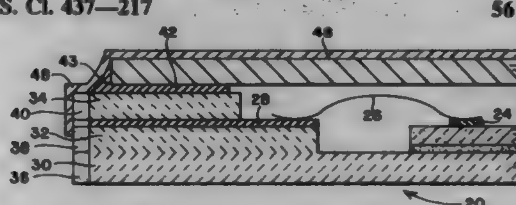

1. A method of manufacturing a hermetically sealed ceramic integrated circuit package having good thermal conductivity for efficiently transferring heat from an integrated circuit chip die contained therein, comprising the steps of:
attaching at least one integrated circuit chip in a ceramic housing comprising a base, wire bond pads and seal ring, said integrated circuit chip having a face with circuit connection pads thereon and positioned wherein the face is accessible from within said ceramic housing;
connecting said ceramic housing wire bond pads to said integrated circuit connection pads;
attaching a cover to said ceramic housing seal ring wherein said cover and housing are hermetically sealed together;
attaching a lead frame to said ceramic housing base, said lead frame having a plurality of electrical conductors that are fixedly aligned with said housing wire bond pads; and
connecting said lead frame conductors to said housing wire bond pads.

5,702,986
LOW-STRESS METHOD OF FABRICATING FIELD-EFFECT TRANSISTORS HAVING SILICON NITRIDE SPACERS ON GATE ELECTRODE EDGES

Viju K. Mathews; Pierre C. Fazan, and Nanseng Jeng, all of Boise, Id., assignors to Micron Technology, Inc., Boise, Id.
Filed Dec. 5, 1995, Ser. No. 567,692
Int. Cl.⁶ H01L *21/84*
U.S. Cl. 438—163 **20 Claims**

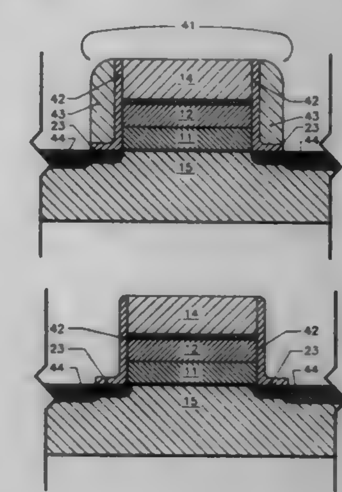

7. A process for forming an insulated-gate field-effect transistor on a silicon substrate, said process comprising the following steps:
(a) growing a gate dielectric layer on the substrate;
(b) depositing at least one conductive layer on top of the gate dielectric layer;
(c) depositing an insulative layer on top of said at least one conductive layer;
(d) forming a mask pattern on the insulative layer, said mask pattern having a profile which corresponds to that of a gate electrode;
(e) anisotropically etching through both the insulative layer and the conductive layer to form a gate electrode having a insulative layer portion, a conductive layer portion and sidewalls formed from both the edges of the insulative layer portion and the conductive layer portion;
(f) depositing a conformal silicon nitride layer which overlies the substrate and covers the sidewalls and the insulative layer portion;
(g) depositing a conformal silicon dioxide layer which covers the conformal silicon nitride layer;
(h) performing an anisotropic etch to form spacers from the silicon dioxide layer and the silicon nitride layer on each of the sidewalls, each spacer having both a silicon nitride portion and a silicon dioxide portion;
(i) performing a source/drain implant with at least the silicon nitride portion of the spacer on the sidewalls; and

(j) performing a post-implant anneal with only the silicon nitride portion of the spacer on the sidewalls.

5,702,987

METHOD OF MANUFACTURE OF SELF-ALIGNED JFET

Wei Tony Chen, Singapore, Singapore, and Ravishankar Sundaresan, Plano, Tex., assignors to Chartered Semiconductor Manufacturing Pte Ltd, Singapore, Singapore

Filed Aug. 26, 1996, Ser. No. 703,079

Int. Cl.[6] H01L *21/337*

U.S. Cl. 438—187 **27 Claims**

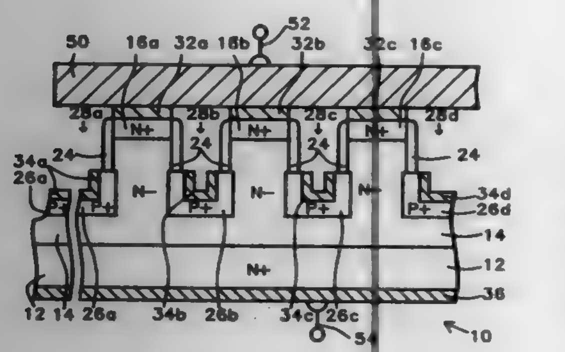

1. A method of forming a junction field effect transistor device by the steps comprising:
providing a substrate comprising a body of an epitaxial layer of semiconductor material having a <110> crystallographic orientation adapted for use as an active region for said junction field effect device with a top surface and a lower portion and doped with a first conductivity type of dopant, a drain region layer having a <110> crystallographic orientation formed below said lower portion doped with said first conductivity type of dopant to a higher level than said body of an epitaxial layer of said semiconductor material to form a drain region, said drain region having a lower surface,
doping said top surface of said body with an additional amount of said first conductivity type of dopant to provide a source region layer on said top surface of said body,
forming masking material on said body,
forming a photoresist mask with mask openings therethrough over said masking material, and etching patterned openings in said masking material through said mask openings,
trench etching to form a plurality of gate trenches through said patterned openings in said masking material and said source region layer forming source regions in said source region layer having exposed portions, and continuing said trench etching with said gate trenches extending partially through said epitaxial layer, said trenches having sidewalls and bottoms,
said trench etching comprising etching through said source region layer and said epitaxial layer along a {111} crystallographic plane,
forming a dielectric spacer layer over said sidewalls and bottoms of said gate trenches upon exposed portions of said source region layer and said epitaxial layer in said gate trenches,
etching through said patterned openings in said masking material to remove said spacer layer from said bottoms of said gate trenches, and etching below said bottoms deepening said trenches,
forming a plurality of gate regions with one gate region at the bottoms of each of said gate trenches by doping a portion of said active region,
removing said masking material from said body, and
forming electrodes upon exposed surfaces of said source regions, said gate regions and said drain region.

5,702,988

BLENDING INTEGRATED CIRCUIT TECHNOLOGY

Mong-Song Liang, Hsin-Chu, Taiwan, assignor to Taiwan Semiconductor Manufacturing Company, Ltd., Hsin-Chu, Taiwan

Filed May 2, 1996, Ser. No. 641,767

Int. Cl.[6] H01L *21/8242*

U.S. Cl. 438—238 **55 Claims**

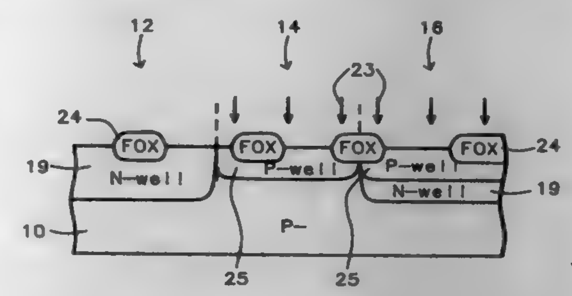

1. A method of forming semiconductor logic devices and memory devices on a single semiconductor substrate, in a logic region and memory region, respectively, comprising the steps of:
providing a semiconductor substrate having a first conductivity type dopant;
forming a triple-well structure in said semiconductor substrate, having N-well regions, P-well regions, and P-well in N-well regions;
forming field isolation regions in said semiconductor substrate, in both said logic and memory regions;
forming a cell for said memory device in said P-well in N-well region of said memory region;
performing a channel implant in said substrate for each of said logic and memory devices;
forming a primary gate oxide over said substrate for each of said logic and memory devices;
forming a gate over each said primary gate oxide;
forming lightly doped drain (LDD) regions in said substrate, using said gate as a mask;
forming sidewall spacers on the vertical sides of each said gate;
forming heavily doped source and drain regions adjacent to said LDD regions, using said gate and said sidewall spacers as a mask;
forming an inter-level dielectric layer over said logic and memory devices;
forming contact openings in said inter-level dielectric layer over contact regions of said logic and memory devices;
depositing a metal layer over said inter-level dielectric layer and in said openings to make contact to said contact regions; and
completing said memory and logic devices.

5,702,989

METHOD FOR FABRICATING A TUB STRUCTURED STACKED CAPACITOR FOR A DRAM CELL HAVING A CENTRAL COLUMN

Chen-Jong Wang, and Mong-Song Liang, both of Hsin-chu, Taiwan, assignors to Taiwan Semiconductor Manufacturing Company Ltd., Hsin-Chu, Taiwan

Filed Feb. 8, 1996, Ser. No. 598,782

Int. Cl.[6] H01L *21/20; 21/8242*

U.S. Cl. 438—397 **20 Claims**

1. A method of fabricating a tub structured capacitor having a central column for a memory device on a substrate; said substrate having a device area with a source region formed therein, comprising the steps of:
a) forming an etch barrier layer over said device area and elsewhere over said substrate;
b) forming a first insulating layer over said etch barrier layer;
c) forming a contact opening in said first insulating layer and said etch barrier layer exposing portions of said source region;

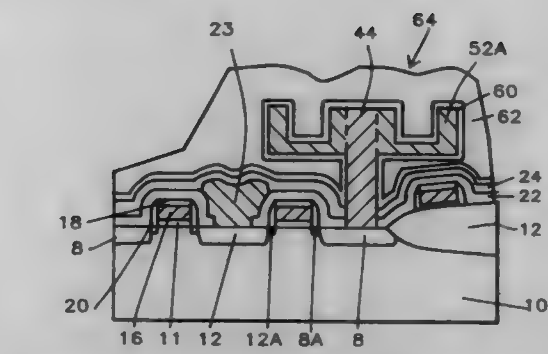

d) forming a first conductive layer over said first insulating layer and filling said contact opening thereby forming an electrical contact to said source region;
e) chemically mechanically polishing said first conductive layer over said first insulating layer to a depth that at least exposes said first insulating layer thereby forming a central vertical extension;
f) forming a trench resist layer over said first insulating layer; said trench resist layer having an opening over said active area;
g) anisotropically etching said first insulating layer using said trench resist layer as a mask thereby forming a trench surrounding said central vertical extension; said trench having vertical sidewalls;
h) forming a second conductive layer over said trench, said central vertical extension and said first insulating layer;
i) forming an dielectric layer over said second conductive layer and at least filling said trench;
j) chemically mechanically polishing said dielectric layer, said second conductive layer, and said central vertical extension to a depth that at least exposes said first insulating layer thereby forming a storage electrode;
k) removing said first insulating layer and the remaining dielectric layer; and
l) sequentially forming a capacitor dielectric layer and a top electrode over said at least said storage electrode thereby forming said tub structured capacitor having said central column.

5,702,990

METHOD OF FORMING A BIT LINE OVER CAPACITOR ARRAY OF MEMORY CELLS AND AN ARRAY OF BIT LINE OVER CAPACITOR ARRAY OF MEMORY CELLS

Mark Jost, Boise, and Charles Dennison, Meridian, both of Id., assignors to Micron Technology, Inc., Boise, Id.

Continuation of Ser. No. 394,546, Feb. 22, 1995, Pat. No. 5,605,857, which is a continuation-in-part of Ser. No. 277,916, Jul. 20, 1994, Pat. No. 5,401,681, which is a continuation-in-part of Ser. No. 47,668, Apr. 14, 1993, Pat. No. 5,338,700, and a continuation-in-part of Ser. No. 17,067, Feb. 12, 1993, Pat. No. 5,340,763. This application Sep. 13, 1996, Ser. No. 712,616

Int. Cl.[6] H01L *21/4763*

U.S. Cl. 438—618 **26 Claims**

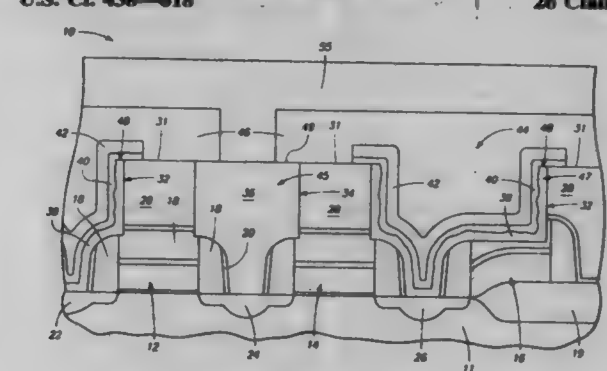

1. A method of forming a bit line plug to an active region, comprising the following steps:
forming a word line over a semiconductor wafer;
forming a first active region and a second active region associated with the word line;
forming a layer of electrically insulating material over the word line and active regions, the layer of electrically insulating material comprising an upper surface at a first level;
forming a bit line contact opening through the insulating material layer to the second active region;
forming an electrically conductive layer over the insulating material layer and within the bit line contact opening, the electrically conductive layer within the bit line contact opening ultimately forming a bit line plug;
forming a capacitor opening through the electrically conductive layer and through the insulating material to the first active region; and
after forming the capacitor opening, chemical-mechanical polishing the electrically conductive layer to below the first level of the upper surface of the layer of the insulating material.

5,702,991

INTERPENETRATING NETWORK COMPOSITIONS AND STRUCTURES

Richard L. Jacobs, 3831 San Felipe Ave., Newbury Park, Calif. 91230

Continuation of Ser. No. 389,432, Feb. 14, 1995, abandoned, which is a continuation of Ser. No. 824,583, Jan. 23, 1992, abandoned. This application Jun. 12, 1996, Ser. No. 661,338

Int. Cl.[6] C08J *5/08; 5/24;* **C08F** *2/50*

U.S. Cl. 442—72 **17 Claims**

1. Composition for interpenetrating network comprising a first reagent and a second reagent, said first reagent comprising a light curable resin of an ethylenically reactive vinyl-, or allyl-moiety containing monomer mixed with urethane polymer formers comprising diphenyl methane diisocyanate or dicyclohexane diisocyanate; said second reagent comprising a light curable resin of an ethylenically reactive vinyl-, or allyl-moiety containing monomer, oligomer or polymer and a polyol forming a urethane polymer with said diisocyanates; in combination with a filler for said composition in at least one of said first and second reagents, said composition and said filler being further combined with fiber reinforcement and a catalyst for the light cure of said light curable resin under conditions under which said light curable resins are not reactive and remain flowable and said urethane polymer forming diisocyanates are reactive with said polyol to form urethane polymer which is sufficiently cured to be nonflowable and to retain said light curable resins in place against flowing from said reinforcing fiber.

5,702,992

CLEANSER-IMPREGNATED CLOTHS FOR CLEANSING THE SKIN

John P. Martin, Pfafftown, N.C.; Susan M. Skewes, Quaker Hill, Conn., and Russell E. Raddatz, Columbia, S.C., assignors to Incline Technologies Inc., Incline Village, Nev.

Continuation-in-part of Ser. No. 266,963, Jun. 27, 1994, abandoned, which is a continuation-in-part of Ser. No. 203,230, Feb. 28, 1994, abandoned. This application Oct. 13, 1995, Ser. No. 542,964

Int. Cl.[6] B32B *3/02;* **B29D** *22/00;* **D04H** *1/58*

U.S. Cl. 442—123 **17 Claims**

1. An article for cleansing the skin, said article comprising: a cloth formed from a blend of cotton, polyester and cellulose

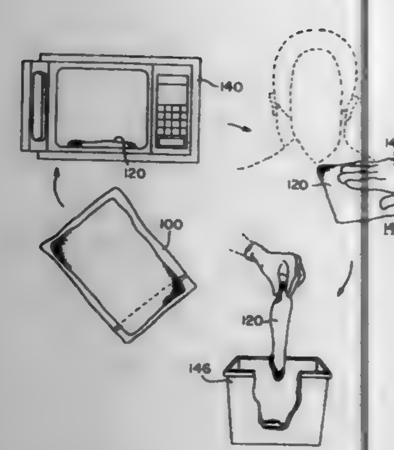

acetate fibers, an antimicrobial agent carried by said cloth, said fibers being entangled.

5,702,993

TRIAXIAL FABRIC COMPOSED OF CARBON FIBER STRANDS AND METHOD FOR PRODUCTION THEREOF

Kenji Kubomura; Hiromi Kimura, and Hirotaka Shibata, all of Kawasaki, Japan, assignors to Nippon Steel Corporation, Tokyo, and Sakase Adteck Co., Sakai-gun, both of Japan

PCT No. PCT/JP95/02248, § 371 Date Jul. 3, 1996, § 102(e) Date Jul. 3, 1996, PCT Pub. No. WO96/14455, PCT Pub. Date May 17, 1996

PCT Filed Nov. 2, 1995, Ser. No. 669,498

Claims priority, application Japan, Nov. 4, 1994, 6-271622

Int. Cl.⁶ B32B *7/00*

U.S. Cl. 442—204 **8 Claims**

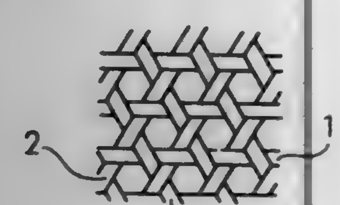

1. A triaxial fabric wherein two sets of warp yarns (bias yarns) of carbon fiber strands are interwoven with one set of weft yarns (0° directional yarns) of carbon fiber strands having the same cross-sectional area as the bias yarn and arranged in the widthwise direction of the fabric, characterized in that the fabric has a crimp releasing ratio (L'−L)/L, after being subjected to a heat treatment at 1800° C. in an inert gas atmosphere, satisfying the following equation:

$$(L_0-L)/L_0\times 0.07 \geqq (L'-L)/L \geqq 0$$

wherein L is a apparent length of the weft yarn composing the triaxial fabric; L_0 is a length of the weft yarn along the crimp; and L' is an apparent length of the weft yarn when removed from the fabric.

5,702,994

MOLDABLE FILM FOR FASTENING TO A BASE AND SHIELDING FROM RADIATION OR FOR INSULATION OF ELECTRICALLY CONDUCTING PARTS

Egon Klosel, Walldorf, Germany, assignor to Besma Beschichtungsmassen GmbH, Heidelberg, Germany

Continuation-in-part of Ser. No. 956,175, Oct. 5, 1992, abandoned. This application Mar. 28, 1994, Ser. No. 218,691

Claims priority, application Germany, Oct. 5, 1991, 41 33 122.2; Mar. 23, 1994, 44 10 558.4

Int. Cl.⁶ C09J *7/02*

U.S. Cl. 442—229 **7 Claims**

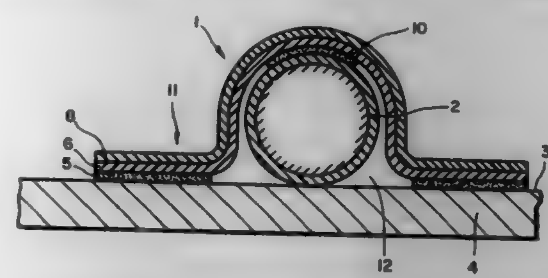

1. A moldable film (1) having a longitudinal side or middle axis for shielding from radiation, flows and/or electric fields and/or for insulation or for galvanic separation of electrically conducting or conductive parts and/or for fastening parts, especially components, pipes or electric line to a base, said moldable film comprising: a metal first layer (7) having a first side and a second side, a second layer (8, 26*a*, 32*a*) having a first side and a second side, said second side of said second layer being attached to said first side of said first layer, said second layer having been being drawn crosswise to the longitudinal side or middle axis of the film (1) and a third layer (6, 26*b*, 32*b*), which has a first side and a second side, said first side of said third layer being bonded to the second layer or said metal first layer, said third layer having been drawn in a direction parallel to the longitudinal middle axis of the film (1), which is different from the direction which said second layer had been drawn, in such a way that both the drawing orientation lines (41, 42) or the resulting oriented molecular structure of the layers intersect at an angle and that the second side of said third layer is provided with an adhesive (21, 31, 5), said adhesive being applied as a continuous coating or in strips.

5,702,995

LITHIUM ION CONDUCTIVE GLASS-CERAMICS

Jie Fu, Sagamihara, Japan, assignor to Kabushiki Kaisha Ohara, Japan

Filed Oct. 31, 1996, Ser. No. 741,704

Claims priority, application Japan, Nov. 15, 1995, 7-320971; Apr. 12, 1996, 8-115694

Int. Cl.⁶ C03C *10/02;4/14*

U.S. Cl. 501—10 **8 Claims**

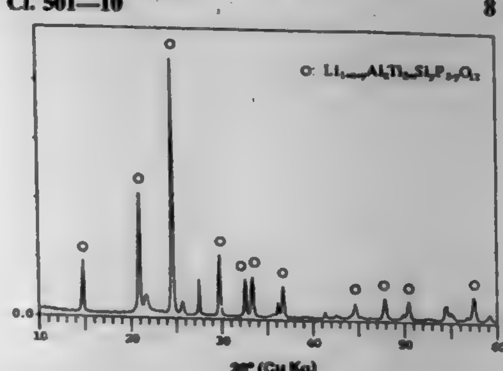

1. Lithium ion conductive glass-ceramics comprising in mol %:

P_2O_5	35–40%
TiO_2	25–45%

-continued

M_2O_3 (where M is Al or Ga)	5–15%
Li_2O	10–20%

and containing $Li_{1+X}(Al, Ga)_X Ti_{2-X}(PO_4)_3$ where $0<X<0.8$ as a main crystal phase.

5,702,996

INSULATION PASTE CONTAINING GLASS

Hiromichi Kawakami, Moriyama, and Hiroji Tani, Nagaokakyo, both of Japan, assignors to Murata Mfg. Co., Ltd., Kyoto-fu, Japan

Filed Sep. 27, 1996, Ser. No. 720,053

Claims priority, application Japan, Sep. 29, 1995, 7-252282

Int. Cl.⁶ C03C *8/14;8/16*

U.S. Cl. 501—14 **20 Claims**

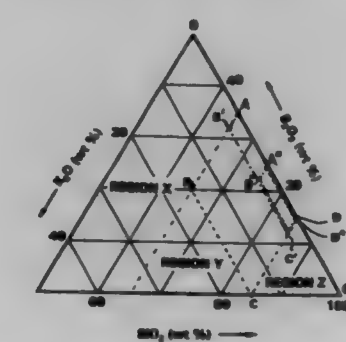

1. An insulation paste consisting of:

a glass consisting of a combination of at most SiO_2, B_2O_3, K_2O and refining agent, said glass having the composition ratio denoted as $xSiO_2$—yB_2O_3—zK_2O in which x, y and z designate the weight percent of the constituent components and which falls within the area bounded by lines connecting points A (x=65, y=35, z=0), B (x=65, y=20, z=15), C (x=85, y=0, z=15) and D (x=85, y=15, z=0) and containing less than about 100 parts by weight of said $xSiO_2$—yB_2O_3—zK_2O of at least one refining agent selected from the group consisting of Al_2O_3, La_2O_3, CaO, Ta_2O_5 and Nb_2O_3;

Al_2O_3 filler in an amount of 0 or about 0.5 to 40 weight percent based on the combined weight of the glass and filler; and an organic vehicle.

5,702,997

PROCESS FOR MAKING CRACK-FREE SILICON CARBIDE DIFFUSION COMPONENTS

Stephen Dynan, Sterling; Jack Shindle, Rutland, and John Vayda, West Brookfield, all of Mass., assignors to Saint-Gobain/Norton Industrial Ceramics Corp., Worcester, Mass.

Filed Oct. 4, 1996, Ser. No. 725,717

Int. Cl.⁶ C04B *35/569*

U.S. Cl. 501—88 **28 Claims**

1. A method for producing a crack-flee sintered silicon carbide body, comprising the steps of:

a) providing a raw powder batch comprising:

i) at least 40 w/o fine grain fraction having a particle size of less than 10 microns, the fine grain fraction comprising silicon carbide,

ii) at least 40 w/o coarse grain fraction having a particle size of at least 30 microns, the coarse grain fraction comprising silicon carbide and less than 0.10 w/o free carbon,

the raw batch having a total silica content of at least 0.5 w/o, the raw batch having a total silicon carbide content of at least 96 w/o,

b) forming the raw batch into a green body, and

c) recrystallizing the green body to provide a recrystallized silicon carbide body having a density of between 2.0 g/cc and 2.8 g/cc.

5,702,998

SINTERED CERAMIC BODY FOR A SPARK PLUG INSULATOR AND METHOD OF SINTERING THE SAME

Makoto Sugimoto; Mamoru Musasa; Hiroyuki Tanabe, and Masahiro Konishi, all of Nagoya, Japan, assignors to NGK Spark Plug Co., Ltd., Nagoya, Japan

Division of Ser. No. 31,931, Mar. 15, 1993, Pat. No. 5,370,832, which is a continuation of Ser. No. 781,118, Oct. 22, 1991, abandoned. This application Aug. 4, 1994, Ser. No. 285,832

Claims priority, application Japan, Oct. 22, 1990, 2-285427

Int. Cl.⁶ C04B *35/581;35/584*

U.S. Cl. 501—97 **1 Claim**

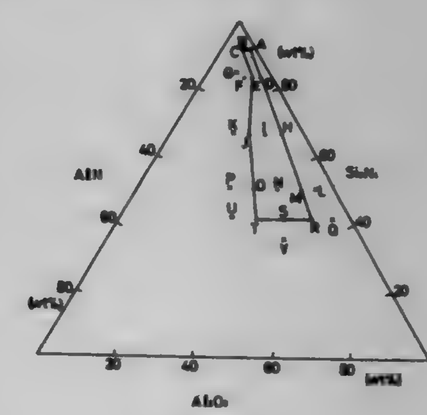

1. A sintered ceramic spark plug insulator body consisting essentially of silicon nitride (Si_3N_4), aluminum nitride (AlN) and alumina (Al_2O_3), the ratio of the sum of the weight of aluminum nitride (AlN) and alumina (Al_2O_3) to silicon nitride (Si_3N_4) being in the range 0.093–1.439 and at least one sintering additive selected from the group consisting of yttrium oxide (Y_2O_3), calcium oxide (CaO), lanthanum oxide (La_2O_3), magnesia (MgO), cerium oxide (CeO_2), scandium oxide (Sc_2O_3), strontium oxide (SrO), barium oxide (BaO) and neodymium (Nd_2O_3), the weight percentage of the sintering additive being in the range from 0.3 to 15.0 of the total weight of the silicon nitride (Si_3N_4), aluminum nitride (AlN) and alumina (Al_2O_3), said sintered ceramic body having an electrical resistance of 50 M/Ω or more at 700° C., the composition of said spark plug insulator body being within the area bounded by the straight lines connected points A, C, E, J, T, R and A shown in the three-component or triaxial diagram of FIG. 1, said three component diagram being made up of the compounds (Si_3N_4), aluminum nitride (AlN) and alumina (Al_2O_3).

5,702,999

OXYGEN PERMEABLE MIXED CONDUCTOR MEMBRANES

Terry J. Mazanec, Solon, and Thomas L. Cable, Newbury, both of Ohio, assignors to The Standard Oil Company, Cleveland, Ohio

Division of Ser. No. 615,580, Mar. 13, 1996, which is a continuation of Ser. No. 575,412, Dec. 20, 1995, which is a division of Ser. No. 311,295, Sep. 23, 1994, abandoned. This application Dec. 10, 1996, Ser. No. 763,235

Int. Cl.⁶ B01D *53/22;71/02;* **C04B** *35/057;35/32*

U.S. Cl. 501—152 **5 Claims**

1. A process for oxygen separation, which process comprises contacting a suitable oxygen-containing fluid at temperatures

between 25° and 950° C. with a membrane comprising a composition of substantially cubic perovskite structure represented by the empirical formula

$$[A_{1-x}A'_x][Co_{1-y-z}B_yB'_z]O_{3-\delta},$$

wherein

A is chosen from the group consisting of Ca, Sr, Ba, and mixtures thereof;

A' is chosen from the group consisting of La, Y, Ce, Pr, Nd, Pm, Sm, Eu, Gd, Tb, Dy, Ho, Er, Tm, Yb, Lu, Th, U, and mixtures thereof;

B is chosen from the group consisting of Fe, Mn, Cr, V, Ti, and mixtures thereof;

B' is chosen from the group consisting of Cu, Ni, and mixtures thereof;

x is not less than about 0.0001 and not greater than about 0.1;

y is not less than about 0.002 and less than 0.05;

z is not less than about 0.0005 and not greater than about 0.3; and

δ is determined by the valence of the metals.

5,703,000

SEMICONDUCTIVE CERAMIC COMPOSITION AND SEMICONDUCTIVE CERAMIC DEVICE USING THE SAME

Akinori Nakayama, Otsu; Terunobi Ishikawa, Toyonaka; Hiroshi Takagi, Otsu, and Yukio Sakabe, Kyoto, all of Japan, assignors to Murata Manufacturing Co., Ltd., Kyoto-fu, Japan

Filed Feb. 6, 1997, Ser. No. 796,916

Claims priority, application Japan, Feb. 6, 1996, 8-020165

Int. Cl.⁶ C04B *35/50*

U.S. Cl. 501—152 **20 Claims**

1. A semiconductive ceramic composition comprising a lanthanum cobalt oxide having a negative resistance-temperature characteristic, and containing chromium oxide in an amount of from about 0.005 to 30 mol % in terms of chromium.

5,703,001

PROMOTED SILVER CATALYST

Nabil Rizkalla, Riverdale, N.J., assignor to Scientific Design Company, Inc., Little Ferry, N.J.

Filed Oct. 25, 1996, Ser. No. 738,042

Int. Cl.⁶ B01J *23/50*

U.S. Cl. 502—347 **7 Claims**

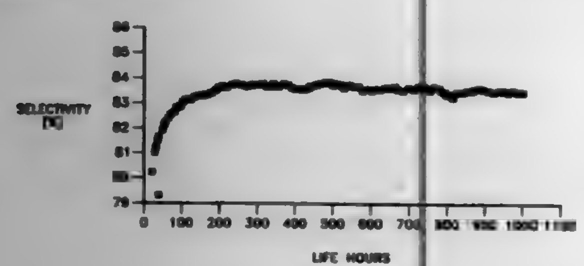

1. A rhenium-free catalyst for the oxidation of ethylene to ethylene oxide comprised by weight of 5–30% silver on a solid alumina support having a surface area of 0.2–2.0 m^2/g and containing a promoting amount of (1) an alkali metal component and (2) a Group 4b component wherein the Group 4b component is added as a compound having a Group 4b cation.

5,703,002

PHOTOCATALYST PARTICLES CONTAINING FERROMAGNETIC METAL PARTICLES AND METHOD FOR SYNTHESIS THEREOF

Atsuya Towata, and Mutsuo Sando, both of Nagoya, Japan, assignors to Agency of Industrial Science & Technology, Ministry of International Trade & Industry, Tokyo, Japan

Filed Aug. 27, 1996, Ser. No. 703,550

Claims priority, application Japan, Aug. 30, 1995, 7-246919

Int. Cl.⁶ B01J *23/06;21/06*

U.S. Cl. 502—350 **14 Claims**

1. Photocatalyst particles consisting essentially of a matrix consisting of a crystal phase of a semiconducting metal oxide and ferromagnetic metal particles dispersed in said matrix, wherein said photocatalytic particles have an average particle size of 15 nm at most and a specific surface area of at least 100 m^2/g.

5. A method for the production of photocatalyst particles according to claim 1, which consists essentially of dispersing water in a hydrophobic organic solvent containing a surfactant thereby forming a microemulsion, adding to said microemulsion a raw material for the formation of the crystal phase of a semiconducting metal oxide as a photocatalyst and a raw material for the formation of ferromagnetic metal particles, causing said raw materials contained in the mixture resulting from the preceding step to undergo hydrolysis and inducing precipitation of the hydroxide and oxide thereof in said resultant mixture, separating said precipitates from said resultant mixture, and heat-treating the separated precipitates under a reducing condition.

5,703,003

DURABLE REGENERABLE SORBENT PELLETS FOR REMOVAL OF HYDROGEN SULFIDE FROM COAL GAS

Ranjani V. Siriwardane, Morgantown, W. Va., assignor to United States Department of Energy, Washington, D.C.

Continuation-in-part of Ser. No. 216,392, Mar. 23, 1994, Pat. No. 5,494,880. This application Nov. 1, 1995, Ser. No. 562,538

Int. Cl.⁶ B01J *20/02;20/30*

U.S. Cl. 502—400 **11 Claims**

1. Durable sorbent pellets chemically and physically stable for use in multi-cycle sulfidation and regeneration processes at temperatures over 260° C. (500° F.) consisting of a mixture of the following components:

a material reactive with hydrogen sulfide and selected from the group consisting of metal oxides, acetates, formates, carbonates ad nitrates of zinc, copper, iron, manganese, chromium, and mixtures thereof and having a particle size below 50 microns—30 to 65 weight percent;

a diluent selected from the group consisting of, calcium sulfate, calcium phosphate, magnesium sulfate, and zinc silicate, and having a particle size less than 50 microns— 20 to 40 weight percent;

an inert material comprising particles having a particle size at least twice that of said material reactive with hydrogen sulfide selected from the group consisting of silica, silica gel, alumina, alumina gel, calcium sulfate (drierite), zinc silicate, and sand, wherein the particle size of said inert material is chosen to create additional voids between the components, thus increasing the porosity of the sorbent pellets —2 to 40 weight percent;

a binder unreactive with hydrogen sulfide, having a particle size less than said inert material, and selected from the group consisting of bentonite, kaolinite, and cement and mixtures thereof—2 to 45 weight percent;

a promoter selected from the group consisting of oxides and salts of copper, cobalt, manganese, nickel and mixtures thereof—an amount greater than zero and up to 10 weight percent;

said mixture having been moistened with water, formed into pellets, dried, and calcined at a temperature above 538° C. (1,000° F.), but low enough to avoid a chemical reaction of said material reactive with hydrogen sulfide with said diluent; and

said material reactive with hydrogen sulfide being unreactive with all other components of said mixture at said calcination temperature.

5,703,004

Patent Not Issued For This Number

5,703,005

THERMOSENSITIVE COLORING COMPOSITION AND REVERSIBLE THERMOSENSITIVE RECORDING MEDIUM USING SAME

Masafumi Torii, Shizuoka; Hiromi Furuya; Masaru Shimada, both of Shizuoka-ken, and Kyoji Tsutsui, Mishima, all of Japan, assignors to Ricoh Company, Ltd., Tokyo, Japan

Filed May 14, 1996, Ser. No. 645,754

Claims priority, application Japan, May 15, 1995, 7-138918; Apr. 11, 1996, 8-113029; Apr. 26, 1996, 8-129298

Int. Cl.⁶ B41M *5/30*

U.S. Cl. 503—201 **3 Claims**

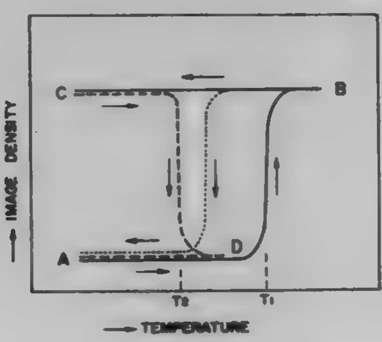

1. A reversible thermosensitive recording medium, comprising a support, and a thermosensitive recording layer supported on said support and including a coloring agent, and a developer capable of reacting with said coloring agent to develop a color, said color developer being a carboxylic acid having the following formula (I):

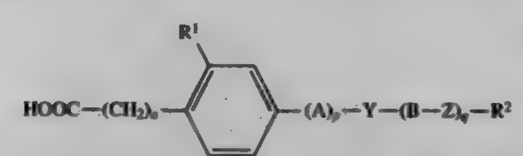

(I)

wherein R^1 stands for a substituent selected from the group consisting of a hydrogen atom, a halogen atom, a hydroxyl group, an alkyl group and an alkoxy group, R^2 stands for an aliphatic hydrocarbon group having at least 8 carbon atoms, A stands for a divalent aliphatic hydrocarbon group, B stands for a divalent group selected from the group consisting of substituted and non-substituted aromatic groups and substituted and non-substituted aliphatic groups, Y stands for a divalent group containing at least one hereto atom, Z stands for a divalent group containing at least one hetero atom, n is an integer of 1–3 and p and q are each an integer of 0 or 1,

wherein said recording layer is capable of:

(a) assuming a color development state when heated at a first temperature at which said coloring agent and said developer are fused and then rapidly cooled to room temperature, and

(b) assuming a decolorization state when heated to a second temperature which is lower than said first temperature and maintaining said decolorization state when cooled to room temperature.

5,703,006

THERMOSENSITIVE RECORDING MEDIUM

Yasutomo Mori; Motoi Orihara; Kunihiko Hada, and Shuji Miyamoto, all of Numazu, Japan, assignors to Ricoh Company, Ltd., Tokyo, Japan

Filed Jan. 11, 1996, Ser. No. 584,355

Claims priority, application Japan, Jan. 12, 1995, 7-019720

Int. Cl.⁶ B41M *5/30*

U.S. Cl. 503—207 **7 Claims**

1. A thermosensitive recording medium comprising a support, and a thermosensitive color-developing layer formed on said support and containing a leuco dye having a melting point of at least 200° C. a color developer having a melting point of at least 180° C., and an image stabilizing agent having a melting point of at least 200° C.;

wherein said image stabilizing agent is an organic compound selected from the group consisting of bis(3,5-dibromo-4-hydroxyphenyl)sulfone, bis(4-hydroxyphenyl)sulfone, dodecanedio-bis{(2-hydroxybenzoyl)hydrazide}, sodium salt of di(2,4,6-tri-t-butylphenyl)hydrogenphosphate, 3-(2-hydroxybenzoylamino)-1-H- 1,2,4-triazine, 1,3,5-tris (4-hydroxy-3,5-di-t-butylbenzyl)isocyanuric acid and 1,1-bis (2-methyl-4-hydroxy-5-t-butylphenyl)butanebis(3,5-dibromo-4-hydroxyphenyl)sulfone.

5,703,007

Patent Not Issued For This Number

5,703,008

PYRAZOLINES FOR PROTECTING CROP PLANTS AGAINST HERBICIDES

Wolfgang Rösch, Frankfurt am Main; Erich Sohn, Augsburg; Klaus Bauer, Hanau, and Hermann Bieringer, Eppstein/Taunus, all of Germany, assignors to Hoechst Aktiengesellschaft, Frankfurt, Germany

Continuation of Ser. No. 848,998, Apr. 21, 1992, abandoned. This application Jun. 7, 1995, Ser. No. 476,065

Claims priority, application Germany, Nov. 30, 1989, 39 39 503.0

Int. Cl.⁶ A01N *25/32;43/56;43/86*

U.S. Cl. 504—106 **30 Claims**

1. A composition which protects crop plants and which contains as a safener an effective amount of a compound of formula (I).

(I)

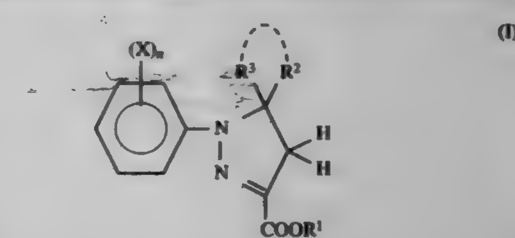

where

X radicals independently of one another are halogen or haloalkyl,

n is an integer from 1 to 3,

R^1 is hydrogen, alkyl, cycloalkyl, trialkylsilyl, trialkylsilylmethyl or alkyloxyalkyl,

R^2 and R^3 independently of one another are hydrogen, alkyl, C_3–C_6-cycloalkyl, alkenyl, alkynyl, haloalkyl, alkoxyalkyl, hydroxylalkyl, alkoxycarbonyl, alkylcarbonyl, alkylaminocarbonyl, optionally substituted phenyl, halogen or cyano, it being possible for the radicals R^2 and R^3 to form a ring with the 5-C atom

of the pyrazoline ring, and which, additionally, contains an herbicide.

5,703,009

METHOD AND SYSTEM FOR THE TREATMENT OF SEEDS AND BULBS WITH OZONE

Jean-Claude Yvin, Saint Malo, and Christian Coste, Versailles, both of France, assignors to Laboratories Goemar S.A., Saint Malo, and Degremont, Rueil-Malmaison, both of France

PCT No. PCT/FR94/01153, § 371 Date Mar. 26, 1996, § 102(e) Date Mar. 26, 1996, PCT Pub. No. WO95/09523, PCT Pub. Date Apr. 13, 1995

PCT Filed Oct. 4, 1994, Ser. No. 615,250

Claims priority, application France, Oct. 4, 1993, 93/11776

Int. Cl.[6] A01N *59/00;* **A01M** *13/00*

U.S. Cl. 504—116 **11 Claims**

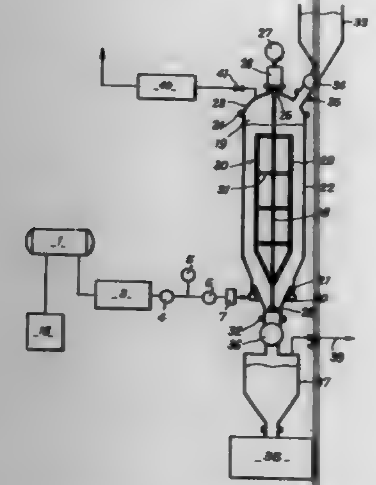

1. A method for improving the germination of seeds or the growth of bulbs, comprising, prior to planting, placing said seeds or bulbs into contact with gaseous ozone as a sole oxidizing agent, and adjusting residual moisture content of said seeds or bulbs before or simultaneously with the placing into contact with ozone, to a value in the range of 5% to 60% by weight of the seeds or bulbs, the seeds or bulbs thereby being suitable for storage without any additional drying step.

5,703,010

FORMULATIONS OF CROP PROTECTION AGENTS

Rudolf Heinrich, Kelkeim; Thomas Maier, Frankfurt am Main; Jean Kocur, Hofheim am Taunus, and Rainer Schlicht, Bad Camberg, all of Germany, assignors to Hoechst Aktiengesellschaft, Frankfurt, Germany

Division of Ser. No. 404,940, Mar. 15, 1995, Pat. No. 5,602,177, which is a continuation of Ser. No. 830,644, Feb. 4, 1992, abandoned. This application Sep. 11, 1996, Ser. No. 711,874

Claims priority, application Germany, Feb. 6, 1991, 41 03 467.8; Aug. 22, 1991, 41 27 757.0

Int. Cl.[6] A01N *25/12;43/76;53/10*

U.S. Cl. 504—116 **7 Claims**

1. Water-emulsifiable granules having an average particle diameter of 0.3 to 5 mm, which granules comprise

2 to 70% by weight of a pesticidally active substance which is not soluble, or which is only sparingly soluble in water, selected from the group consisting of herbicides, safeners, insecticides, fungicides, acaricides, nematicides, pheromones and repellants,

20 to 80% by weight of a high-boiling solvent or solvent mixture, and

10 to 80% by weight of an at least partially water-soluble shell-forming structural material, which shell-forming structural material is comprised of a polyvinyl alcohol obtained by partial hydrolysis of polyvinyl acetate, or of a mixture of such polyvinyl alcohols, and which granules do not contain deltamethrin as the pesticidally active substance.

5,703,011

PROCESS AND COMPOSITION FOR CONTROLLING WEEDS

Jerry Caulder, San Diego; R. Hugh Crowley, Oceanside; Paul S. Zorner, La Costa, and Steven L. Evans, San Diego, all of Calif., assignors to Mycogen Corporation, San Diego, Calif.

Division of Ser. No. 396,372, Feb. 28, 1995, abandoned, which is a continuation of Ser. No. 229,866, Apr. 19, 1994, abandoned, which is a continuation of Ser. No. 980,015, Nov. 23, 1992, abandoned, which is a division of Ser. No. 638,708, Jan. 8, 1991, Pat. No. 5,196,044. This application Jun. 6, 1995, Ser. No. 466,531

Int. Cl.[6] A01N *43/40*

U.S. Cl. 504—130 **17 Claims**

1. An agricultural composition for controlling weeds, said composition comprising a first ingredient which is a monocarboxylic acid having about seven to about twenty carbon atoms, or a salt thereof, and a second ingredient which is a chemical herbicide, wherein said chemical herbicide is clopyralid.

5,703,012

PROCESS AND COMPOSITION FOR CONTROLLING WEEDS

Jerry Caulder, San Diego; R. Hugh Crowley, Oceanside; Paul S. Zorner, La Costa, and Steven L. Evans, San Diego, all of Calif., assignors to Mycogen Corporation, San Diego, Calif.

Division of Ser. No. 396,372, Feb. 28, 1995, abandoned, which is a continuation of Ser. No. 229,866, Apr. 19, 1994, abandoned, which is a continuation of Ser. No. 980,015, Nov. 23, 1992, abandoned, which is a division of Ser. No. 638,708, Jan. 8, 1991, Pat. No. 5,196,044. This application Jun. 6, 1995, Ser. No. 468,677

Int. Cl.[6] A01N *43/40*

U.S. Cl. 504—130 **17 Claims**

1. An agricultural composition for controlling weeds, said composition comprising a first ingredient which is a monocarboxylic acid having about seven to about twenty carbon atoms, or a salt thereof, and a second ingredient which is a chemical herbicide, wherein said chemical herbicide is pichloram.

5,703,013

PROCESS AND COMPOSITION FOR CONTROLLING WEEDS

Jerry Caulder, San Diego; R. Hugh Crowley, Oceanside; Paul S. Zorner, La Costa, and Steven L. Evans, San Diego, all of Calif., assignors to Mycogen Corporation, San Diego, Calif.

Division of Ser. No. 396,372, Feb. 28, 1995, abandoned, which is a continuation of Ser. No. 229,866, Apr. 19, 1994, abandoned, which is a continuation of Ser. No. 980,015, Nov. 23, 1992, abandoned, which is a division of Ser. No. 638,708, Jan. 19, 1991, Pat. No. 5,196,044. This application Jun. 7, 1995, Ser. No. 468,601

Int. Cl.[6] A01N *43/88*

U.S. Cl. 504—131 **17 Claims**

1. An agricultural composition for controlling weeds, said composition comprising a first ingredient which is a monocarboxylic acid having about seven to about twenty carbon atoms, or a salt thereof, and a second ingredient which is a chemical herbicide, wherein said chemical herbicide is bentazon.

5,703,014

PROCESS AND COMPOSITION FOR CONTROLLING WEEDS

Jerry Caulder, San Diego; R. Hugh Crowley, Oceanside; Paul S. Zorner, La Costa, and Steven L. Evans, San Diego, all of Calif., assignors to Mycogen Corporation, San Diego, Calif.

Division of Ser. No. 396,372, Mar. 28, 1995, abandoned, which is a continuation of Ser. No. 229,866, Apr. 19, 1994, abandoned, which is a continuation of Ser. No. 980,015, Nov. 23, 1992, abandoned, which is a division of Ser. No. 638,708, Jan. 8, 1991, Pat. No. 5,196,044. This application Jun. 6, 1995, Ser. No. 469,400

Int. Cl.[6] A01N *37/02;37/06;37/10*

U.S. Cl. 504—142 **19 Claims**

1. An agricultural composition for controlling weeds, said composition comprising a first ingredient which is a monocarboxylic acid having about seven to about twenty carbon atoms, or a salt thereof, and a second ingredient which is a chemical herbicide, wherein said chemical herbicide is a benzoic acid herbicide.

5,703,015

PESTICIDAL COMPOSITIONS OF POLYOXYALKYLENE ALKYLAMINE SURFACTANTS HAVING REDUCED EYE IRRITATION

Paul D. Berger, Sugar Land, and Antonio M. Jimenez, Missouri, both of Tex., assignors to Monsanto Company, St. Louis, Mo.

Continuation-in-part of Ser. No. 101,214, Aug. 4, 1993, abandoned, which is a continuation of Ser. No. 565,816, Aug. 9, 1990, abandoned. This application Dec. 19, 1994, Ser. No. 358,274

Int. Cl.[6] A01N *57/04*

U.S. Cl. 504—206 **9 Claims**

1. A composition which is an aqueous solution comprising:

(a) a glyphosate herbicide in a herbicidally effective amount,

(b) an amine surfactant component having the chemical structure

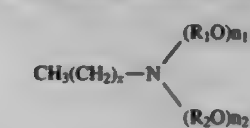

wherein x is a number from about 7 to about 19; n_1 and n_2 are numbers independently selected from 1 to about 30; the average sum of n_1 and n_2 is 2 or greater; R_1 and R_2 are C2–C4 alkylene radicals, said amine surfactant being in an amount sufficient to potentiate the glyphosate herbicidal activity but at the same time sufficient to cause unacceptable eye irritation; and

(c) an effective eye irritation reducing amount of a phosphate monoester or mixture of phosphate monoesters having the general formula

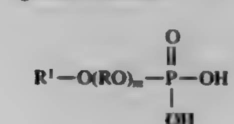

wherein R^1 is C_8–C_{20} alkyl or C_8–C_{20} alkylphenyl; R is C_2–C_4 alkylene: m is zero or a number up to about 60; alone or in combination with a phosphate diester or mixture of phosphate diesters having the general formula;

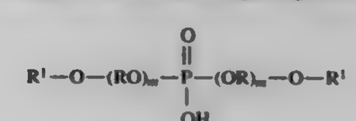

wherein R, R_1, and m are as just described, provided the weight percentage of phosphate monoester (on monoesters) exceeds that of the phosphate diester (or diesters).

5,703,016

SURFACTANT COMPOSITION FOR USE WITH GLYPHOSATE COMPRISING DIMETHYL AMINE OXIDE, POLYETHOXYLATED ALCOHOL, AND PYRIDINIUM HALIDE

Ralph W. Magin, and Joe D. Sauer, both of Baton Rouge, La., assignors to Albemarle Corporation, Richmond, Va.

Filed Sep. 30, 1996, Ser. No. 720,519

Int. Cl.[6] A01N *25/30;57/02;* **B01F** *17/32;17/42;17/16*

U.S. Cl. 504—206 **35 Claims**

1. A composition which comprises a solution or suspension containing at least a herbicidal or plant growth regulating amount of a composition formed by mixing the following ingredients with water concurrently and/or in any sequence and/or in any preformed combination and/or subcombination thereof:

a) at least one agriculturally acceptable salt of glyphosate, or a solution or suspension thereof;

b) at least one water-soluble or water-dispersible long chain aliphatic hydrocarbyl dimethyl amine oxide in which the hydrocarbyl group is a linear or substantially linear saturated or olefinically unsaturated aliphatic group having in the range of about 8 to about 22, carbon atoms, or a solution or suspension thereof;

c) at least one water-soluble or water-dispersible polyethoxylated monohydric saturated or olefinically-unsaturated alcohol of the formula:

$$RO—[CH_2CH_2O]_nH$$

in which R has at least about 8 carbon atoms and is a straight or branched chain saturated aliphatic hydrocarbyl group or a straight or branched chain monoolefinically or a poly-olefinically unsaturated hydrocarbyl group having from 1 to 3 olefinic double bonds, and in which n is in the range of about 2 to about 50, or a solution or suspension thereof; and

d) at least one water-soluble or water-dispersible N-hydrocarbyl pyridinium halide having up to about 24 carbon atoms in the molecule, and wherein (i) the hydrocarbyl group attached to the nitrogen atom of the heterocyclic aromatic ring of the pyridinium nucleus is a saturated or olefinically unsaturated aliphatic hydrocarbyl group having in the range of about 4 to about 18 carbon atoms, and (ii) the ring carbon atoms of the pyridinium nucleus itself are either unsubstituted or one or more of such ring carbon atoms are substituted with a short chain alkyl group of up to about 4 carbon atoms, or a solution or suspension thereof.

5,703,017

3-(HET) ARYLCARBOXYLIC ACID DERIVATIVES, THEIR PREPARATION AND INTERMEDIATES FOR THEIR PREPARATION

Ernst Baumann, Dudenhofen; Joachim Rheinheimer; Uwe Josef Vogelbacher, both of Ludwigshafen; Matthias Bratz, Speyer; Hans Theobald; Matthias Gerber, both of Limburgerhof; Karl-Otto Westphalen, Speyer; Helmut Walter, Obrigheim, and Wilhelm Rademacher, Limburgerhof, all of Germany, assignors to BASF Aktiengesellschaft, Ludwigshafen, Germany

PCT No. PCT/EP94/01141, § 371 Date Oct. 19, 1995, § 102(e) Date Oct. 19, 1995, PCT Pub. No. WO94/25442, PCT Pub. Date Nov. 10, 1994

PCT Filed Apr. 13, 1994, Ser. No. 537,843

Claims priority, application Germany, Apr. 23, 1993, P 43 13 412.2

Int. Cl.[6] A01N *43/54;43/66;* **C07D** *239/60;251/30;409/12;401/12;405/12;* **C07C** *69/734*

U.S. Cl. 504—227 **14 Claims**

1. A 3-(het)arylcarboxylic acid derivative of the formula I

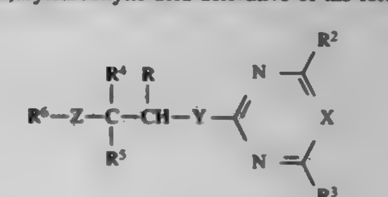

I

where R is formyl, CO_2H or a radical hydrolyzable to COOH and
R_2 is halogen, C_1–C_4-alkyl, C_1–C_4-haloalkyl, C_1–C_4-alkoxy, C_1–C_4-haloalkoxy or C_1–C_4-alkylthio;

X is nitrogen or CR^{14}, where R^{14} is hydrogen or, together with R^3, forms a 3-membered or 4-membered alkylene or alkenylene chain, in each of which a methylene group is replaced by oxygen;

R^3 is halogen, C_1–C_4-alkyl, C_1–C_4-haloalkyl, C_1–C_4-alkoxy, C_1–C_4-haloalkoxy or C_1–C_4-alkylthio or R^3 is linked to R^{14} as stated above to form a 5-membered or 6-membered ring;

R^4 is phenyl or naphthyl which may be substituted by one or more, in particular one to three, of the following radicals: halogen, nitro, cyano, hydroxyl, mercapto, amino, C_1–C_4-alkyl, C_1–C_4-haloalkyl, C_1–C_4-alkoxy, C_1–C_4-haloalkoxy, C_1–C_4-alkylthio, C_1–C_4-alkylamino, di-C_1–C_4-alkylamino, C_1–C_4-alkylcarbonyl or C_1–C_4-alkoxycarbonyl;

a five-membered or six-membered heteroaromatic structure which contains one to three nitrogen atoms and/or one sulfur or oxygen atom and may carry one or more of the following radicals: halogen, nitro, cyano, hydroxyl, mercapto, amino, C_1–C_4-alkyl, C_1–C_4-haloalkyl, C_1–C_4-alkoxy, C_1–C_4-haloalkoxy, C_1–C_4-alkylthio, C_1–C_4-alkylamino, C_1–C_4-dialkylamino, C_1–C_4-alkylcarbonyl, C_1–C_4-alkoxycarbonyl or phenyl;

R^5 is hydrogen, C_1–C_4-alkyl, C_3–C_6-alkenyl, C_3–C_6-alkynyl, C_3–C_8-cycloalkyl, C_1–C_4-haloalkyl, C_1–C_4-alkoxyalkyl, C_1–C_4-alkylthioalkyl or phenyl;

R^6 is C_1–C_8-alkyl, C_3–C_6-alkenyl, C_3–C_6-alkynyl or C_3–C_8-cycloalkyl, it being possible for these radicals to be mono- or polysubstituted in each case by: halogen, nitro, cyano, C_1–C_4-alkoxy, C_3–C_6-alkenyloxy, C_3–C_6-alkynyloxy, C_1–C_4-alkylthio, C_1–C_4-haloalkoxy, C_1–C_4-alkylcarbonyl, C_1–C_4-alkoxycarbonyl, C_1–C_4-alkylamino, di-C_1–C_4-alkylamino, phenyl or phenyl or phenoxy which is mono- or polysubstituted, for example mono- to trisubstituted, by halogen, nitro, cyano, C_1–C_4-alkyl, C_1–C_4-haloalkyl, C_1–C_4-alkoxy, C_1–C_4-haloalkoxy or C_1–C_4-alkylthio;

Y is sulfur or oxygen or a single bond; and

Z is sulfur or oxygen;

with the proviso that R^6 is not unsubstituted C_1–C_4-alkyl when R^4 is unsubstituted phenyl, Z is oxygen and simultaneously R^5 is methyl or hydrogen.

5,703,018

Patent Not Issued For This Number

5,703,019

HERBICIDALLY-ACTIVE FATTY ACID ALLPHATIC AMINE SALTS

Steven L. Evans; John Harvey, both of San Diego, Calif., and Yasuko Tsujino, Kanagawa, Japan, assignors to Mycogen Corporation, San Diego, Calif.

Continuation of Ser. No. 385,218, Feb. 8, 1995, abandoned, which is a continuation of Ser. No. 796,161, Nov. 22, 1991, abandoned. This application Jun. 2, 1995, Ser. No. 458,546
Int. Cl.⁶ A01N *37/02*
U.S. Cl. 504—320 **18 Claims**

1. A process for controlling unwanted vegetation, said process comprising the application of a herbicidal composition wherein said composition comprises an aliphatic ammonium salt of a fatty acid, in a suitable agricultural carrier, wherein said fatty acid salt can be represented by the following formula:

$R_1Y_1Y_2COOR_2$

wherein

R_1=C7 to C11 saturated hydrocarbon, or an epoxide, or cyclopropane thereof

Y_1=H, C1–C5 hydrocarbon, or hydroxyl at any position along R_1

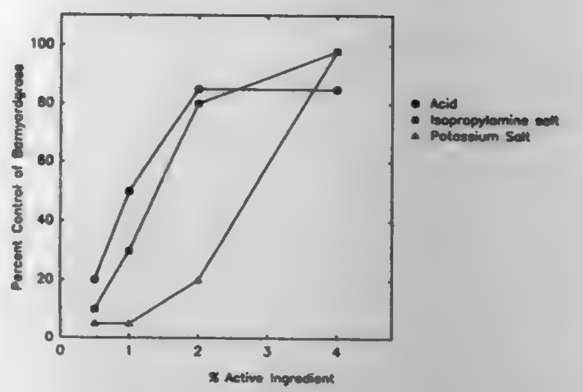

Y_2=H, C1–C5 hydrocarbon, or hydroxyl at any position along R_1

R_2=a salt-forming moiety chosen from the group consisting of aliphatic amines which form aliphatic ammonium cations.

5,703,020

HIGH TC SUPERCONDUCTING FERROELECTRIC MMIC PHASE SHIFTERS

Satyendranath Das, P.O. Box 574, Mt. View, Calif. 94042-0574

Continuation of Ser. No. 39,428, May 30, 1995, abandoned. This application Feb. 12, 1996, Ser. No. 606,014
Int. Cl.⁶ H01P *9/00;* **H01B** *12/02*
U.S. Cl. 505—210 **20 Claims**

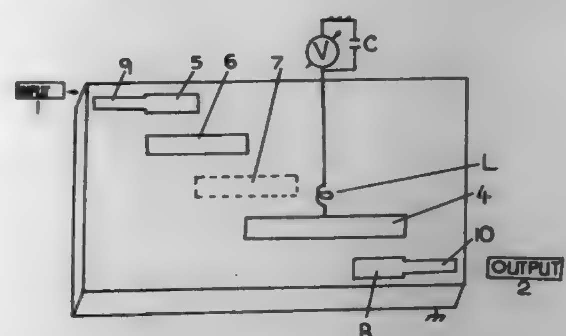

1. A MMIC ferroelectric high Tc superconducting phase shifter, having an input, an output, a ground plane, a band pass filter, a single crystal ferroelectric material having an electric field dependent permittivity, a Curie temperature and comprised of:

said ground plane being a sheet of a single crystal high Tc superconductor;

said single crystal ferroelectric material comprised of a single crystal ferroelectric film deposited on the said ground plane;

a first microstrip line being disposed on said single crystal ferroelectric film to provide a phase shift;

said band pass filter comprising of second, third, fourth, ... (n−1), n, microstrip lines;

said second microstrip line being disposed on said single crystal ferroelectric film being one half wavelength long, at said operating frequency of the phase shifter, and said second microstrip line having a first one quarter wavelength portion thereof being edge coupled to and separate from an input end of the first microstrip line and having a remaining second quarter wavelength portion being coupled to and separate from the following said third microstrip line;

said third, fourth . . . (n−1)th microstrip lines respectively disposed on said single crystal ferroelectric film each one of said third, fourth . . . (n−1)th microstrip lines respectively being one half wavelength long, at said operating frequency of the phase shifter, having a first one quarter wavelength portion thereof being edge coupled to and separate from previous ones of the third, fourth (n−1)th microstrip lines and having a remaining second quarter wavelength portion thereof being coupled to and being separate from a succeeding one of the third, fourth (n−1)th microstrip lines;

said nth microstrip line disposed on said single crystal ferroelectric film being one quarter wavelength long, at said operating frequency of the phase shifter, said nth microstrip line being coupled to and being separate from the (n−1)th microstrip line;

an input transformer, being quarter wavelength long at said operating frequency of the phase shifter, and comprised of microstrip conductors on said single crystal ferroelectric film of the phase shifter, said input transformer being connected to and being a part of the nth microstrip line for matching an impedance of an input circuit of the phase shifter to an impedance of the phase shifter;

a first transmission means for coupling energy from the input circuit into said input transformer;

a (n+1)th microstrip line disposed on said single crystal ferroelectric film being one quarter wavelength long, at said operating frequency of the phase shifter, said (n+1)th microstrip line being coupled to and being separate from an output end of the first microstrip line;

an output transformer, being quarter wavelength long at said operating frequency of the phase shifter, and comprised of microstrip conductors on said single crystal ferroelectric film of the phase shifter, said output transformer being connected to and being a part of the (n+1)th microstrip line for matching an impedance of an output circuit of the phase shifter to an impedance of said phase shifter;

a second transmission means for coupling energy from said output transformer into the output circuit;

voltage means for applying a bias voltage to the first microstrip line;

said first, second . . . nth, (n+1)th microstrip lines being respectively comprised of a film of a single crystal high Tc superconductor; and

means for operating said phase shifter at a high Tc superconducting temperature slightly above the Curie temperature associated with the single crystal ferroelectric film to avoid hysterisis and to provide a maximum change of the permittivity of said single crystal ferroelectric film of the phase shifter.

5,703,021

PROCESS FOR MAKING HIGH TEMPERATURE BI-SR-CA-CU OXIDE SUPERCONDUCTOR

Hans-Georg von Schnering, Aidlingen; Winfried Becker, Kelkheim; Martin Schwarz, Königstein/Taunus; Bernhard Hettich, Hofheim am Taunus; Martin Hartweg, Stuttgart; Leonhard Walz, Rastatt, and Thomas Popp, Leonberg, all of Germany, assignors to Hoechst Aktiengesellschaft, Germany

Division of Ser. No. 133,557, Oct. 7, 1993, which is a continuation of Ser. No. 525,547, May 18, 1990, abandoned, which is a continuation of Ser. No. 305,854, Feb. 2, 1989, abandoned. This application Jun. 7, 1995, Ser. No. 475,078
Claims priority, application Germany, Feb. 5, 1988, P 38 03 530.8; Feb. 29, 1988, P 38 06 417.0; Feb. 29, 1988, P 38 06 530.4; Mar. 1, 1988, P 38 06 531.2
Int. Cl.⁶ H01B *12/00;* **C04B** *35/626;35/64*
U.S. Cl. 505—501 **18 Claims**

1. A process for preparing a superconducting compound having essentially the overall composition

$Bi_4(Ca,Sr)_{4+2n}Cu_{2+2n}O_x$

where n is 2 and x, which varies with the conditions of said process, is greater than 16 but not greater than 16+4n,

said process comprising:

preparing an initial mixture containing the oxides or oxide precursors of bismuth, calcium, strontium, and copper in the atomic ratios necessary to form said superconducting compound,

heating the resulting mixture to a temperature within the range of between 700° C. and 900° C. so that the mixture is not melted or is only partially melted, and keeping the mixture in this temperature range for at least 100 hours,

cooling the mixture, and

obtaining a superconducting compound having a principal phase which crystallizes in the orthorhombic system and a transition temperature T_c for the superconductivity of at least 70K.

5,703,022

SULFURIZED VEGETABLE OILS CONTAINING ANTI-OXIDANTS FOR USE AS BASE FLUIDS

Robert L. Floyd, Warrensville Heights, Ohio, assignor to The Lubrizol Corporation, Wickliffe, Ohio

Filed Jan. 6, 1997, Ser. No. 779,872
Int. Cl.⁶ C10M *141/08;141/10*
U.S. Cl. 508—345 **20 Claims**

1. An oxidatively stable environmentally friendly lubricant base fluid comprising

(A) at least one sulfurized triglyceride oil wherein the sulfurized triglyceride contains from 0.3 to 3.0 percent by weight of sulfur and

(B) at least one oxidation inhibitor selected from the group consisting of

(1) an alkyl phenol of the formula

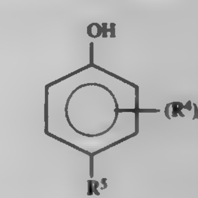

wherein R^4 is an alkyl group containing from 1 to 24 carbon atoms, R^5 is hydrogen, an alkyl group containing 1 or 2 carbon atoms or R^4, and a is an integer of from 1 up to 4;

(2) an ether of the formula

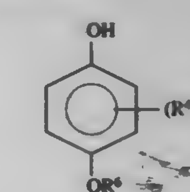

wherein R^6 is an alkyl group containing from 1 to 12 carbon atoms, R^4 is an alkyl group containing from 1 to 24 carbon atoms and b is an integer of from 1 up to 4; and

(3) at least one aromatic amine of the formula

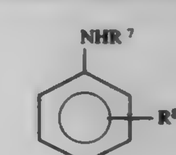

wherein R^7 is

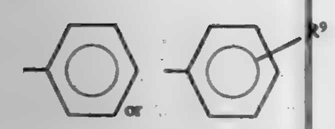

and R^8 and R^9 are independently a hydrogen or an alkyl group containing from 1 to 23 carbon atoms.

5,703,023

LUBRICANTS WITH ENHANCED LOW TEMPERATURE PROPERTIES

Sanjay Srinivasan, Chesterfield, Mo., assignor to Ethyl Corporation, Richmond, Va.

Continuation of Ser. No. 161,903, Dec. 3, 1993, abandoned, which is a continuation-in-part of Ser. No. 816,351, Dec. 24, 1991, abandoned. This application Nov. 21, 1995, Ser. No. 561,553

Int. Cl.[6] C10M *145/16*

U.S. Cl. 508—468 **9 Claims**

1. A vinylaromatic-maleic ester polymeric viscosity index improver in which the ester groups comprise at least a major molar proportion of primary alkyl groups falling in the range of C_8 to C_{18} alkyl groups, about 50 to about 90 mol % of said primary alkyl groups being linear alkyl groups and the balance of said primary alkyl groups being branched chain alkyl groups, wherein at least 90 mol % of the ester groups are primary alkyl groups having 8, 10, 12, 14, 16 and 18 carbon atoms, wherein from 5 to 20 tool % of said primary alkyl groups are linear C_8 alkyl groups, and wherein from 10 to 50 mol % of said primary alkyl groups are 2-ethylhexyl groups.

5,703,024

COMPOSITIONS AND METHODS FOR DISINFECTING A CONTACT LENS AND DETECTING THE PRESENCE OF AN OXIDATIVE DISINFECTANT

John Y. Park, Santa Ana; Lin Peng, Tustin, and Anthony J. Dziabo, Lake Forest, all of Calif., assignors to Allergan, Waco, Tex.

Filed Jun. 30, 1995, Ser. No. 496,867

Int. Cl.[6] C11D *7/18*

U.S. Cl. 510—100 **20 Claims**

1. A composition comprising:

a liquid aqueous medium;

hydrogen peroxide in an amount of about 0.2% to about 6% (w/v) of said composition effective to disinfect a contact lens immersed in said composition; and

a color indicator component which is soluble in said liquid aqueous medium and is effective to provide a color indication of the presence of said hydrogen peroxide in said liquid aqueous medium, said color indicator component comprising about 0.0001% to about 2% by weight of said liquid aqueous medium of a transition metal component which is redox active, has an oxidized state of a first color, a reduced state of a different second color and comprises a metal selected from the group consisting of ruthenium, other platinum group metals, cobalt, chromium and mixtures thereof and about 0.001% to about 5% by weight of said liquid aqueous medium of a polyanionic component selected from the group consisting of anionic cellulose derivatives, anionic acrylic acid polymers, anionic aspartic acid polymers, anionic glutamic acid polymers, anionic alginic acid polymers, anionic dextran derivatives and mixtures thereof effective to inhibit the staining of a contact lens immersed in said composition by said transition metal component.

5,703,025

MONOHYDRIC ALCOHOL-FREE PROCESS FOR MAKING A TRANSPARENT POUR MOLDED PERSONAL CLEANSING BAR

Alexandre Zyngier, Caracas, Venezuela; Benjamin Carl Wiegand, Hamilton, Ohio; Alejandro Figueroa, Cincinnati, Ohio, and Michael August Brunsman, Cincinnati, Ohio, assignors to The Procter & Gamble Company, Cincinnati, Ohio

Continuation-in-part of Ser. No. 285,261, Aug. 3, 1994, abandoned. This application Jul. 21, 1995, Ser. No. 493,351

Int. Cl.[6] C11D *9/00;17/00;9/22*

U.S. Cl. 510—147 **8 Claims**

1. A monohydric alcohol free process for making transparent pour molded personal cleansing soap bars, comprising the steps of:

I. making a molten mix of: (A) from 18 parts to 35 parts soap; wherein the soap is at least 50% insoluble sodium soap; (B) from 5 parts to 37 parts lathering synthetic surfactant, wherein the lathering synthetic surfactant has a critical micelle concentration equilibrium surface tension between 10 and 50 dynes/cm, as measured at 25° C.; (C) from 14 parts to 27 parts water; and (D) from 18 parts to 37 parts of a water soluble organic solvent, wherein the combined level of water and water soluble organic solvent within the bar is at least 40 parts;

II. transferring the molten mix to shaped bar molds or forming tubes, and

III. allowing the molten mix to cool under acquiescent conditions at an average rate of approximately 0.1° to 7.0° C. per minute, crystallize and solidify thereby providing said transparent personal cleansing soap bars; and

wherein in step I, the temperature of the molten mix is adjusted to a temperature in the range of 68° C. to 85° C.; and wherein heat sensitive materials and optional bar soap ingredients are added to the molten mix in presence of agitation; and wherein the temperature of the molten mix is again adjusted to a temperature in the range of 68° C. to 85° C. before being poured into the bar shaped molds or forming tubes in step II.

5,703,026

SKIN CLEANSING BAR SOAP COMPOSITIONS COMPRISING PARTICLES OF ABSORBENT GELLANT MATERIALS

Drew Douglas Setser, Montgomery, and George Endel Deckner, Cincinnati, both of Ohio, assignors to The Procter & Gamble Company, Cincinnati, Ohio

Filed Jun. 1, 1995, Ser. No. 456,987

Int. Cl.[6] C11D *9/04*

U.S. Cl. 510—152 **11 Claims**

1. A bar soap composition comprising:

(a) from about 40% to about 95% surfactant component comprising fatty acid soap and/or synthetic surfactant, such that the composition comprises:

(1) from 0% to about 95% fatty acid soap;

(2) from 0% to about 50% synthetic surfactant;

(b) particles of absorbent gellant material, the amount of absorbent gellant material, dry weight basis, in the composition being from about 0.02% to about 5%, the absorbent gellant material having an extractable polymer content of less than about 25%, the absorbent gellant material being selected from the group consisting of starch-grafted sodium polyacrylates, starch-grafted acrylate/acrylamide copolymers, mixtures of polyacrylate and starch-grafted polyacrylate, isobutylene maleic anhydride copolymer, and mixtures thereof;

(c) from about 5% to about 35% water;

(d) from 0% to about 25% moisturizer;

(e) from 0% to about 15% other ingredients comprising one or more of polymeric skin feel and mildness aid, perfume, solvent, colorant, antibacterial agent, and preservative.

5,703,027

MONOMERIC RICH SILICATE SYSTEM IN AUTOMATIC DISHWASHING COMPOSITION WITH IMPROVED GLASS ETCHING

Gregory Stephen Caravajal, Fairfield, and Janet Layne Marshall, Cincinnati, both of Ohio, assignors to The Procter & Gamble Company, Cincinnati, Ohio

Filed Nov. 29, 1994, Ser. No. 346,560

Int. Cl.[6] C11D *3/08;3/06;3/10;3/60*

U.S. Cl. 510—232 **14 Claims**

1. An automatic dishwashing detergent composition comprising, by weight:

(a) from about 1% to about 10% of SiO_2 as monomeric silicate;

(b) from about 1% to about 10% of SiO_2 as a second silicate component having a SiO_2:M_2O weight ratio (where M=alkali metal) of from about 2 to about 2.4, wherein said monomeric silicate (a) and silicate component (b) have a SiO_2 weight ratio of from about 10:1 to about 1:10; and wherein the automatic dishwashing detergent composition comprises from about 5% to about 12% total SiO_2;

(c) from about 0.01% to about 15% of low foaming surfactant,

(d) from about 0.1% to about 50% of a detergency builder; wherein said detergency builder is a salt or salt/builder of sodium/potassium phosphate; and

(e) from about 0.001% to about 5% of a detersive enzyme; wherein said composition has a pH of from about 9.5 to about 10.5.

5,703,028

LIQUID CRYSTAL DETERGENT COMPOSITIONS BASED ON ANIONIC SULFONATE-ETHER SULFATE MIXTURES

Rita Erilli, Liege; Chantal Gallant, Cheratte, and Regis Lysy, Olne, all of Belgium, assignors to Colgate-Palmolive Co, Piscataway, N.J.

Filed Jun. 14, 1996, Ser. No. 664,368

Int. Cl.[6] C11D *3/14;3/43;17/00*

U.S. Cl. 510—236 **5 Claims**

1. A liquid crystal detergent composition which comprises by weight:

(a) about 15% to about 30% of a sodium paraffin sulfonate;

(b) about 2% to about 20% of a water soluble salt of an ethoxylated C_{8-18} alkyl ether sulfate surfactant;

(c) about 1% to about 10% of an abrasive which is selected from the group consisting of calcite, amorphous hydrated silica, polyethylene powder and mixtures thereof;

(d) about 2% to about 15% of tripropylene glycol n-butyl ether;

(e) about 4% to about 10% of a water insoluble organic compound selected from the group consisting of perfumes, essential oils and water insoluble hydrocarbons having about 8 to about 18 carbon atoms; and

(f) the balance being water, wherein said liquid crystal detergent composition has a storage modulus measured at a temperature between 20° C. to 40° C., at a strain of 0.1% to 5% and a frequency of 10 radians/second of at least about one Pascal and said composition does not contain any nonionic surfactant.

4. A process for treating materials soiled with lipophilic soil to loosen or remove the soil which comprises applying to the locus of said soil on said materials a soil loosening or removing amount of a composition according to claim 1.

5,703,029

CAR DRY-BRIGHT COMPOSITION

Gerhard Crass, Friedberg, and Erich Gatter, Kastl, both of Germany, assignors to Hoechst Aktiengesellschaft, Germany

Filed Aug. 28, 1995, Ser. No. 520,012

Claims priority, application Germany, Aug. 30, 1994, 44 30 721.7

Int. Cl.[6] C11D *1/62;1/835*

U.S. Cl. 510—242 **1 Claim**

1. An aqueous car dry-bright composition comprising:

a concentrate consisting essentially of:

(a) from 1 to 30% by weight of quaternary ammonium compounds of the formula

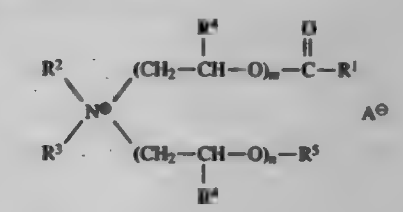

in which

R^1 is independently at each occurrence C_6–C_{22}-alkyl or C_6–C_{22}-alkenyl,

m and n independently of one another are a number from 1 to 6,

R^2 is C_1–C_4-alkyl,

R^4 is hydrogen or C_1–C_4-alkyl,

R^5 is hydrogen or a group of the formula $C(O)R^1$,

R^3 is C_1–C_4alkyl or a group of the formula

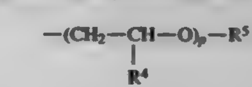

in which R^4 and R^5 are as defined above and p is a number from 1 to 6,

and

$A^\ominus$ is an anion,

(b) from 2 to 10% by weight of a C_8–C_{22}-alkylamino-(C_1–C_4)-alkoxylate, a C_8–C_{22}-alkylalkylene diamine, or a mixture thereof, and

(c) the butyl ether of ethylene glycol or propylene glycol;

said composition further comprising from 150 to 500 times the quantity of water, based on the weight of said concentrate.

5,703,030

BLEACH COMPOSITIONS COMPRISING COBALT CATALYSTS

Christopher Mark Perkins, Cincinnati, Ohio, and William Michael Scheper, Lawrenceburg, Ind., assignors to The Procter & Gamble Company, Cincinnati, Ohio

Continuation of Ser. No. 508,197, Jul. 27, 1995, abandoned, which is a continuation-in-part of Ser. No. 491,238, Jun. 16, 1995, abandoned. This application Oct. 25, 1996, Ser. No. 736,647

Int. Cl.[6] C11D *3/39;3/395;7/54;* **B08B** *3/04*

U.S. Cl. 510—311 **15 Claims**

1. A bleaching composition comprising:

(a) from about 0.04% to about 1% by weight of the composition of a cobalt catalyst having the formula:

$[Co(NH_3)_5M]T_y$

wherein cobalt is in the +3 oxidation state; M is a carboxylate-containing ligand having the formula RC(O)O—, wherein R is selected from the group consisting of hydrogen and C_1–C_{30} unsubstituted and substituted alkyl, C_6–C_{30}

unsubstituted and substituted aryl, and C_1–C_{30} unsubstituted and substituted heteroaryl, wherein substituents are selected from the group consisting of —NR'_3, —$NR'_4{}^+$, —C(O)OR', —OR', —C(O)NR'_2, wherein R' is selected from the group consisting of hydrogen and C_1–C_6 moieties, except that RC(O)O is not oxalate; and T is one or more counteranions present in a number y, where y is an integer to obtain a charge-balanced salt;

(b) from about 0.1% to about 70%, by weight, of a source of hydrogen peroxide; and

(c) from about 1% to about 80%, by weight, of builder.

5,703,031

GRANULAR BLEACHING COMPOSITIONS

Marina Trani, Rome; Guiseppe Trigiante, Pisa, both of Italy, and Ellie Marie Frasier, Batavia, Ohio, assignors to Procter & Gamble Company, Cincinnati, Ohio

Continuation of Ser. No. 308,177, Sep. 19, 1994, abandoned. This application Mar. 12, 1996, Ser. No. 614,445

Claims priority, application European Pat. Off., Mar. 14, 1994, 94870046

Int. Cl.^{6} C11D *7/14;7/18;7/32*

U.S. Cl. 510—312 **9 Claims**

1. A granular composition comprising from about 10% to about 80% by weight of a source of available oxygen, from about 0.01% to about 5% by weight of diethylene triamino pentacetic acid, and from about 2% to about 7% by weight of an alkali metal salt of silicate which is sodium crystalline layered silicate having the formula $NaMSi_xO_{2x+1} \cdot yH_2O$ wherein M is sodium or hydrogen, x is a number from about 1.9 to about 4 and y is a number from 0 to about 20, wherein said source of available oxygen is a percarbonate compound.

5,703,032

HEAVY DUTY LIQUID DETERGENT COMPOSITION COMPRISING CELLULASE STABILIZATION SYSTEM

Myongsuk Bae-Lee, Montville; Nancy Falk, Livingston, and Tirucherai Varahan Vasudevan, West Orange, all of N.J., assignors to Lever Brothers Company, Division of Conopco, Inc., New York, N.Y.

Filed Mar. 6, 1996, Ser. No. 611,910

Int. Cl.^{6} C11D *3/386*

U.S. Cl. 510—320 **5 Claims**

1. An aqueous surfactant composition comprising:

(1) 1% to 50% by weight of a surfactant selected from the group consisting of anionic, nonionic, cationic, zwitterionic and amphoteric surfactant and mixtures thereof;

(2) A ternary system for stabilizing Endoglucanase III comprising:

(a) 0.1 to 5% by wt. total composition of a water-soluble, hydrophobic nonionic polymer which is selected from the group consisting of polyvinylpyrrolidone, copolymer of vinyl pyrrolidone and vinyl imidazole, and a copolymer of vinyl pyrrolidone and styrene;

(b) 5% to 25% by wt. total composition of a C_2–C_6 alkylene glycol;

(c) 0.5% to 7.0% by wt. total composition of a alkanolamine; and

(3) 0.001% to 5.0% by wt. Endoglucanase III having an activity of 100 to 5,000 RBB-CMC activity;

wherein fatty acid content is below about 5%; and wherein said composition comprises greater than 30% by wt. water.

5,703,033

LOW SUDSING, LOW STREAKING AND FILMING HARD SURFACE CLEANERS

Alan Edward Sherry; Daniel Stedman Connor, both of Cincinnati, Ohio; Robert Emerson Stidham, Lawrenceburg, Ind., and Phillip Kyle Vinson, Fairfield, Ohio, assignors to The Procter & Gamble Company, Cincinnati, Ohio

Filed Feb. 6, 1996, Ser. No. 596,023

Int. Cl.^{6} C11D *1/28;1/04*

U.S. Cl. 510—237 **21 Claims**

1. A hard surface cleaning composition having improved shine and anti-streaking benefits comprising:

a) at least about 0.1% by weight, of a sulfosuccinamate having the formula

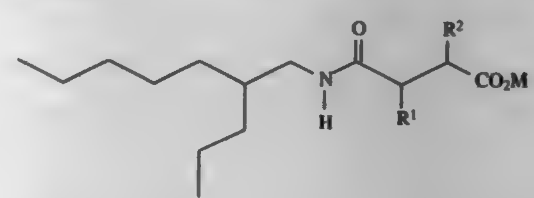

wherein R^1 and R^2 are hydrogen or —SO_3M^2 provided R^1 does not equal R^2; M and M^2 are independently hydrogen or a salt forming cation;

b) at least about 0.1% by weight, of a nonionic surfactant having the formula

$$CH_3(CH_2)_xCH_2O(CH_2CH_2O)_yH$$

wherein x is from about 6 to about 12, y is from about 3.5 to about 10; and

c) the balance carriers and adjunct ingredients.

5,703,034

BLEACH CATALYST PARTICLES

Edward Robert Offshack, Cincinnati; Jeffrey Donald Painter, Loveland, and Melissa Dee Aquino, Cincinnati, all of Ohio, assignors to The Procter & Gamble Company, Cincinnati, Ohio

Filed Oct. 30, 1995, Ser. No. 550,269

Int. Cl.^{6} C11D *7/26;7/50;7/54*

U.S. Cl. 510—376 **7 Claims**

1. A bleach catalyst-containing composite particle suitable for incorporation into granular detergent compositions, said composite particle comprising:

(a) from about 1% to about 60% of a bleach catalyst having the formula $[Co(NH_3)_5OAc]T_y$, wherein OAc represents an acetate moiety and T is one or more appropriately selected counteranions present in a number y, where y is an integer to obtain a charge-balanced salt; and

(b) from about 40% to about 99% of polyethylene glycol carrier material that melts within the range of from about 38° C. to about 77° C.;

and wherein further said composite particles have a mean particle size of from about 200 to about 2400 microns and a free water content of less than 6%.

5,703,035

HIGHLY CONCENTRATED AQUEOUS FABRIC SOFTNERS HAVING IMPROVED STORAGE STABILITY

Horst Birkhan, Steinau-Ulmbach; Michael Fender; Bernhard Irrgang, both of Bad Soden-Salmünster; Christiane Löffert, Schlüchtern, and Simone Schüssler, Bad Orb, all of Germany, assignors to Witco Surfactants GmbH, Steinau an der Strasse, Germany

Continuation of Ser. No. 391,789, Feb. 21, 1995, abandoned. This application Oct. 16, 1996, Ser. No. 730,959

Claims priority, application Germany, Feb. 23, 1994, P 44 05 702.4

Int. Cl.^{6} C11D *3/30;3/32*

U.S. Cl. 510—423 **6 Claims**

1. An aqueous fabric softener comprising

A) 22–30% by weight of one or more compounds of the general formula (1)

$$\left(R^9\!-\!N\!\begin{array}{l} \diagup R^{10} \\ -(CH_2-CH(R)-O-R^8)_y \\ \diagdown (CH_2-CH(R)-O-H)_{x-y} \end{array} \right)^+ A^- \qquad (1)$$

in which R is —H or —CH_3, R^8 is H or —CH_3 and at least one R^8 group is an acyl radical having 6–22 carbon atoms, which optionally contains multiple bonds, wherein the acyl radical is unsubstituted or substituted with —OH; R^9 is —CH_3 or a radical of the formula —CH^2—CH(R)—OH; R^{10} is H, —CH_3, —C_2H_5, or —C_2H_4—OH; y is 1 or 2 and x is 2; and A^- is an organic or inorganic anion; and

B) 0–7% by weight of an amino amide of the general formula (2)

$$(R^{11}-C(O)NH-(CH_2)_3-N(CH_3)_2R^{12})^+ A^- \qquad (2)$$

in which R^{11} is a hydrocarbon radical having 6–22 carbon atoms, which optionally contains multiple bonds, wherein the hydrocarbon radical is unsubstituted or substituted with —OH; R^{12} is one of the radicals —CH_3, —C_2H_5, or —C_2H_4—OH; and A^- is an organic or inorganic anion; and

C) 0.5–3% by weight of a compound of the formula (3)

$$\left(\begin{array}{c} R^1 \\ R^2 \end{array} \!\!>\! \underset{R^6}{N}-\underset{CH_3}{CH}-CH_2-O-(AO)_n-CH_2-\underset{CH_3}{CH}-\underset{R^7}{N}\!<\!\! \begin{array}{c} R^3 \\ R^4 \end{array} \right)^{+2} .2A^- \qquad (3)$$

in which AO in each occurrence is the radical —$CH(CH_3)$—CH_2—O— or the radical —CH_2—CH_2—O—; R_1, R^2, R^3 and R^4 are identical or different from one another and each is a radical of the formula H—(O—CH(R)—CH_2—$)_m$—, in which R is H or a methyl or ethyl radical and each m is 1–10; R^6 and R^7 are identical or different from one another and each is H, —CH_3, —C_2H_5, or —C_2H_4OH; n is 1–30; and A^- is an organic or inorganic anion; and

D) 0–1.5% by weight of an electrolyte salt; and

E) 0.5–1.5% by weight of a perfume oil; and

F) 2.0–7.0% by weight of one or more compounds selected from the group consisting of short-chain alcohols containing 1 to 8 carbon atoms and compounds of the general formula (4)

$$R^{13}O-(CH_2)_c-O-(-(CH_2)_d-O-)_eOR^{14} \qquad (4)$$

in which R^{13} and R^{14} independently of one another are H, CH_3— or C_2H_5—; c and d are each 2–6; and e is 1–10; and

G) water to add up to 100% by weight.

5,703,036

THICKENED AQUEOUS DETERGENT COMPOSITIONS WITH IMPROVED CLEANING PERFORMANCE

Panos Iakovides, Rome, Italy, assignor to The Procter & Gamble Company, Cincinnati, Ohio

PCT No. PCT/US94/10199, § 371 Date Mar. 19, 1996, § 102(e) Date Mar. 19, 1996, PCT Pub. No. WO95/08611, PCT Pub. Date Mar. 30, 1995

PCT Filed Sep. 12, 1994, Ser. No. 617,773

Claims priority, application European Pat. Off., Sep. 20, 1993, 93870191

Int. Cl.^{6} C11D *1/14;1/75;1/83*

U.S. Cl. 510—427 **10 Claims**

1. A detergent composition having a viscosity of from 215 cps to 4000 cps comprising;

from 1 to 5% of a viscosity decreasing short chain surfactant, said surfactant comprising a hydrophobic portion and a hydrophilic portion, wherein the chain length of said hydrophobic portion is C_6 to C_{10}, said short chain surfactants being selected from the group consisting of alkyl sulfates, alkyl ether sulfates, alkyl sulfonates, alkyl succinates, alkyl carboxylates, alkyl sarcosinates, alkyl sulfosuccinates, amine oxides and betaines, and

a viscosity restoring long chain surfactant mixture, said mixture comprising:

from 1 to 5% of an amine oxide according to the formula $R_1R_2R_3NO$, wherein R_1 is a linear C_{12} to C_{16} alkyl group and R_2 and R_3 are independently C_1 to C_3 alkyl groups, and

from 1 to 4% of an alkali metal alkyl sulphate according to the formula R_4OSO_3M, wherein R_4 is a C_{12} to C_{14} alkyl group and M is an alkali metal, and wherein the ratio of said C_{12} to C_{16} amine oxide to the total amount of said C_{12} to C_{14} alkyl sulfate is less than 2:3.

5,703,037

PROCESS FOR THE MANUFACTURE OF FREE-FLOWING DETERGENT GRANULES

Achille Jules Edmond Doumen, Merchtem; Luc Goovaerts, Haacht, and Jose Luis Vega, Strombeek-Bever, all of Belgium, assignors to The Procter & Gamble Company, Cincinnati, Ohio

PCT No. PCT/US95/04798, § 371 Date Oct. 18, 1996, § 102(e) Date Oct. 18, 1996, PCT Pub. No. WO95/29215, PCT Pub. Date Nov. 2, 1995

PCT Filed Apr. 20, 1995, Ser. No. 722,089

Claims priority, application European Pat. Off., Apr. 20, 1994, 94201090

Int. Cl.^{6} C11D *11/00*

U.S. Cl. 510—444 **12 Claims**

1. A process for the manufacture of free flowing detergent granules having a bulk density of at least 600 g/l, comprising the steps of:

a) neutralizing anionic surfactant acid or acids in an excess of alkali to form a paste, and optionally mixing other surfactants with the paste, to give a total surfactant level in the paste of at least 40% by weight;

b) mixing said paste with at least one spray dried powder comprising at least about 10% by weight of each of anionic polymer and a cationic surfactant to form a granular product; and

c) optionally drying the granular product.

5,703,038

THERAPEUTIC USES OF BACTERICIDAL-PERMEABILITY-INCREASING PROTEIN DIMER PRODUCTS

William Steve Ammons, Pinole, and Roger G. Little, Benicia, both of Calif., assignors to XOMA Corporation, Berkeley, Calif.

Continuation of Ser. No. 212,132, Mar. 11, 1994, Pat. No. 5,447,913. This application Jun. 6, 1995, Ser. No. 470,366

Int. Cl.[6] A61K *38/17;38/02;* **C07K** *14/435;2/00*

U.S. Cl. 514—2 **9 Claims**

1. A method of therapeutic use of a bactericidal/permeability-increasing protein product, wherein the improvement comprises advertising to a patent a bactericidal/permeability-increasing protein product formulation containing greater than 50 percent of said product in the form of a stable covalently or non-covalently linked dimeric product characterized by enhanced in vivo biological activity in comparison to the monomeric form of said product.

5,703,039

CHIMERIC TOXINS

Diane P. Williams, Franklin, and John R. Murphy, Boston, both of Mass., assignors to The University Hospital, Boston, Mass.

Division of Ser. No. 231,397, Apr. 22, 1994, which is a continuation of Ser. No. 886,715, May 21, 1992, abandoned, which is a continuation of Ser. No. 537,430, Jun. 13, 1990, abandoned, which is a continuation-in-part of Ser. No. 488,608, Mar. 2, 1990, abandoned. This application Jun. 7, 1995, Ser. No. 483,726

Int. Cl.[6] A61K *38/16*

U.S. Cl. 514—2 **39 Claims**

1. A pharmaceutical composition, comprising a therapeutically effective amount of a chimeric toxin which binds selectively to a predetermined class of cells, said chimeric toxin comprising protein fragments joined together by peptide bonds, said chimeric toxin comprising, sequentially from N-terminus to C-terminus,

(a) a first fragment which is the enzymatically active fragment A of native diphtheria toxin and the 11 cleavage domain of native diphtheria toxin;

(b) a second fragment comprising at least a portion of the hydrophobic transmembrane region of native diphtheria toxin effective to deliver said fragment A into the cytosol of the predetermined class of cells;

(c) a third fragment comprising the sequence of native diphtheria toxin fragment B amino acids C-terminal to the hydrophobic transmembrane region of native diphtheria toxin which is amino acids 372–535, minus the generalized eucaryotic binding domain of native diptheria toxin which is amino acids 486–535, and minus the 1_2 cleavage domain of native diphtheria toxin which is amino acids 461–471, and further minus at least 50 native diphtheria toxin amino acids between amino acid residue 386 of native diphtheria toxin and the generalized eucaryotic binding site of native diphtheria toxin, provided that the 1_2 domain and the at least 50 amino acids deleted total no more than 99 amino acids; and

(d) a fourth fragment comprising at least a portion of the binding domain of a cell-specific polypeptide ligand effective to cause said chimeric toxin to bind selectively to the predetermined class of cells which bear a receptor to the ligand;

wherein said chimeric toxin possesses greater toxicity to the predetermined class of cells than that of a toxin comprising DAB_{486} fused to said fourth fragment, and

a pharmaceutically acceptable carrier.

5,703,040

BROAD SPECTRUM ANTIBIOTIC PEPTIDE

John J. Iandolo, and Scott Crupper, both of Manhattan, Kans., assignors to Kansas State University Research Foundation, Manhattan, Kans.

Filed Nov. 22, 1995, Ser. No. 561,935

Int. Cl.[6] A01N *37/18;* **C09F** *00/00;* **C07K** *1/00;* **A61K** *38/00*

U.S. Cl. 514—2 **31 Claims**

1. An at least partially purified antimicrobial proteinaceous substance produced by *Staphyloccocus aureus* having a molecular weight of from about 6 to 7 kilodaltons, wherein said substance at a concentration of 640 antimicrobial units/ml in an aqueous solution retains essentially all of its antimicrobial activity after one or more of the following treatments: (1) heat treatment at 95° C. for 15 minutes, (2) treatment with 6M urea or 10 mM dithiothreitol at room temperature for 1 hour, and (3) treatment with deoxyribonuclease, ribonuclease, or lysostaphin at a concentration of 1 mg/ml at room temperature for 1 hour.

5,703,041

STABLE COMPOSITION CONTAINING A WATER-SENSITIVE COSMETIC AND/OR DERMATOLOGICAL ACTIVE AGENT

Isabelle Afriat, Paris, and Didier Gagnebien, Chatillon, both of France, assignors to L'Oreal, Paris, France

Filed Jul. 24, 1996, Ser. No. 685,845

Claims priority, application France, Jul. 25, 1995, 95-09029

Int. Cl.[6] A61K *31/69;38/00;57/00;31/59*

U.S. Cl. 514—2 **26 Claims**

1. A composition comprising water, at least one water-sensitive active agent with a topical action and at least one polyol, said composition containing no calcium salt, said polyol being present in a quantity which is effective for obtaining a water activity value of said composition of less than or equal to 0.85, said quantity being at least 30% based on the weight of the total composition, and said composition comprising at least one structuring agent selected from the group consisting of acrylic polymers, methacrylic polymers and oils.

5,703,042

Patent Not Issued For This Number

5,703,043

BONE MORPHOGENETIC PROTEIN-10 (BMP-10) COMPOSITIONS

Anthony J. Celeste, and John M. Wozney, both of Hudson, Mass., assignors to Genetics Institute, Inc., Cambridge, Mass.

Division of Ser. No. 247,908, May 12, 1994, Pat. No. 5,637,480, which is a continuation-in-part of Ser. No. 61,695, May 12, 1993, abandoned. This application May 30, 1995, Ser. No. 453,942

Int. Cl.[6] C07K *14/51;* **A61K** *38/18*

U.S. Cl. 514—12 **9 Claims**

1. A purified bone morphogenetic protein-10(BMP-10) polypeptide consisting of the amino acid sequence from amino acid #1 to amino acid #108 as set forth in SEQ ID NO: 11.

5,703,044

SYNERGISTIC ANTIFUNGAL PROTEIN AND COMPOSITIONS CONTAINING SAME

Walden K. Roberts, Denver; Claude P. Selitrennikoff, Evergreen, both of Colo.; Bridget E. Laue, Davis, Calif., and Sharon L. Potter, Raleigh, N.C., assignors to Novartis Finance Corporation, New York, N.Y.

Division of Ser. No. 178,708, Jan. 10, 1994, Pat. No. 5,521,153, which is a continuation-in-part of Ser. No. 505,781, Apr. 6, 1990, abandoned, which is a continuation-in-part of Ser. No. 104,755, Oct. 2, 1987, abandoned. This application Jun. 1, 1995, Ser. No. 456,430

Int. Cl.[6] A61K *38/16;* **C07K** *14/415*

U.S. Cl. 514—12 **26 Claims**

1. A method of inhibiting the growth of a fungus which comprises applying to said fungus or a habitat of said fungus zeamatin in substantially pure form in an antifungally effective amount or an amount sufficient to enhance the antifungal activity of an antifungal antibiotic selected from the group of antifungal antibiotics which comprises nikkomycins, polyoxins and amphotericins, wherein said zeamatin is a protein isolatable from corn, having a molecular weight of about 22 kD under reducing conditions upon SDS-PAGE, and having the N-terminal amino acid sequence A V F V V N Q C P F T V W A A S V P V G G G R Q L R G E.

5,703,045

TREATING DISORDERS BY APPLICATION OF INSULIN-LIKE GROWTH FACTORS AND ANALOGS

Michael E. Lewis, West Chester; James C. Kauer, Kennet Square; Kevin R. Smith, Parkesburg, all of Pa.; Kathleen V. Callison, Merchantville, N.J.; Frank Baldino, Landenberg, Pa.; Nicola Neff, Wallingford, Pa., and Mohamed Iqbal, Malvern, Pa., assignors to Cephalon, Inc., West Chester, Pa.

Division of Ser. No. 958,903, Oct. 7, 1992, which is a continuation-in-part of Ser. No. 869,913, Apr. 15, 1992, abandoned, which is a continuation-in-part of Ser. No. 534,139, Jun. 5, 1990, abandoned, which is a continuation-in-part of Ser. No. 361,595, Jun. 5, 1989, Pat. No. 5,093,317. This application Jun. 5, 1995, Ser. No. 462,018

Int. Cl.[6] A61K *37/24;38/00;* **G07K** *7/10*

U.S. Cl. 514—12 **2 Claims**

1. A method of enhancing the survival of non-mitotic neuronal cells of the brain or spinal cord of a mammal, said cells being at risk of dying due to the effects of a neurological disease, head trauma or spinal cord injury on said neuronal cells, said method comprising administering to said mammal an effective amount of insulin-like growth factor-II.

5,703,046

TREATMENT METHOD USING RECOMBINANTLY PRODUCED HUMAN MEMBRANE COFACTOR PROTEIN (MCP)

John P. Atkinson, St. Louis, Mo., assignor to Washington University, St. Louis, Mo.

Division of Ser. No. 948,350, Sep. 21, 1992, Pat. No. 5,514,787, which is a continuation of Ser. No. 384,210, Jul. 21, 1989, abandoned. This application Jun. 7, 1995, Ser. No. 476,713

Int. Cl.[6] A61K *38/17;* **C07K** *14/47;14/705;* **C12P** *21/00*

U.S. Cl. 514—12 **6 Claims**

1. A method to treat a disease or condition characterized by enhanced complement activity, which method comprises administering to a subject in need of such treatment an effective amount of isolated human membrane cofactor protein encoded by a DNA which hybridizes under stringent conditions to the complement of the DNA encoding amino acids 1–251 of FIG. 1 expressed in a non-human or human recombinant host cell in admixture with a suitable pharmaceutical excipient.

5,703,047

METHODS AND TREATMENTS FOR CORNEAL HEALING WITH GROWTH FACTORS

Steven E. Wilson, Plano, Tex., assignor to Board Of Regents, The University of Texas System, Austin, Tex.

Continuation-in-part of Ser. No. 947,683, Sep. 21, 1992, Pat. No. 5,589,451. This application Mar. 9, 1995, Ser. No. 400,323

Int. Cl.[6] A61K *38/00;* **C07K** *13/00*

U.S. Cl. 514—12 **11 Claims**

1. A method of inhibiting corneal epithelial cell differentiation comprising contacting a corneal cell with an amount of a growth factor selected from the group consisting of hepatocyte growth factor (HGF) and keratinocyte growth factor (KGF) effective to inhibit corneal cell differentiation.

5,703,048

PROTECTION AGAINST LIVER DAMAGE BY HGF

Filip Roos, Brisbane, and Ralph Schwall, Pacifica, both of Calif., assignors to Genentech, Inc., So. San Francisco, Calif.

Continuation of Ser. No. 310,361, Sep. 21, 1994, abandoned, which is a continuation of Ser. No. 960,711, Oct. 30, 1992, abandoned, which is a continuation-in-part of Ser. No. 946,263, Sep. 16, 1992, abandoned. This application May 26, 1995, Ser. No. 452,485

Int. Cl.[6] A61K *38/18;* **C07K** *14/475;* **C12N** *15/12;* **C07H** *21/04*

U.S. Cl. 514—12 **15 Claims**

1. A method for preventing liver damage in a patient due to exposure to a hepatotoxic agent, the method comprising:

administering hepatocyte growth factor to the patient, wherein said hepatocyte growth factor effectively prevents liver damage due to exposure to the hepatotoxic agent, and wherein said administering is prior to known liver damage in the patient.

5,703,049

HIGH METHIONINE DERIVATIVES OF α-HORDOTHIONIN FOR PATHOGEN-CONTROL

Aragula Gururaj Rao, Urbandale, Iowa, assignor to Pioneer Hi-Bred Int'l, Inc., Des Moines, Iowa

Filed Feb. 29, 1996, Ser. No. 608,786

Int. Cl.[6] A61K *38/00*

U.S. Cl. 514—12 **10 Claims**

1. A method for killing and inhibiting plant pathogenic microorganisms which are susceptible to a α-Hordothionin comprising introducing into the environment of the pathogenic microorganisms an anti-microbial amount of a protein having the sequence of SEQUENCE I.D. NO. 3 wherein the amino acid residues at one or more of positions 1,5,8,11,15,17,18,19,22,23,24,30,32, 33,38, and 41 are methionine, and the remainder of the residues at those positions are the residues at the corresponding positions in SEQUENCE I.D. NO. 1.

5,703,050

UREA DERIVATIVES, THEIR PREPARATION AND USE

Otmar Klingler, Rodgau; Gerhard Zoller, Schöneck; Bernd Jablonka, Bad Soden; Melitta Just, Langen; Gerhard Breipohl, Frankfurt am Main; Jochen Knolle, Kriftel; Wolfgang König, Stallwang, and Hans Ulrich Stilz, Frankfurt am Main, all of Germany, assignors to Hoechst Aktiengesellschaft, Frankfurt am Main, Germany

PCT No. PCT/EP94/00713, § 371 Date Jan. 17, 1996, § 102(e) Date Jan. 17, 1996, PCT Pub. No. WO94/22907, PCT Pub. Date Oct. 13, 1994

PCT Filed Mar. 9, 1994, Ser. No. 513,815

Claims priority, application Germany, Mar. 26, 1993, 43 09 867.3

Int. Cl.[6] A61K *38/00;* **C07K** *5/00*

U.S. Cl. 514—18 **9 Claims**

1. Urea derivatives of the formula I

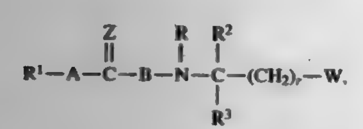

in which

r denotes an integer from 0 to 1;

Z denotes oxygen or sulphur;

W denotes —COW[1] or tetrazolyl;

W[1] denotes hydroxyl, (C_1–C_4)-alkoxy, benzyloxy, amino or mono- or di-((C_1–C_8)-alkyl)amino;

A denotes

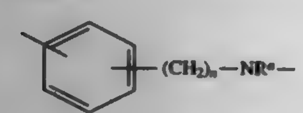

in which n stands for an integer from 0 to 1;

B denotes —NR^b—$(CH_2)_m$—CO—, in which m stands for an integer from 1 to 2; R^a and R^b independently of one another denote hydrogen, hydroxyl, (C_1–C_{18})-alkyl, (C_6–C_{14})-aryl, (C_6–C_{14})-aryl-(C_1–C_8)-alkyl, (C_1–C_{28})-alkoxy, (C_6–C_{14})-aryloxy, or (C_6–C_{14})-aryl-(C_1–C_8)-alkoxy;

R denotes hydrogen or (C_1–C_6)-alkyl;

R[1] denotes —NHX or —C(=NX)—NH_2;

X denotes hydrogen, (C_1–C_6)-alkylcarbonyl, (C_1–C_6)-alkoxycarbonyl, (C_1–C_{18})-alkylcarbonyloxy(C_1–C_6)-alkoxycarbonyl, (C_6–C_{14})-aryl-(C_1–C_6)-alkoxycarbonyl, hydroxyl, or a radical of the formula II

R'—NH—C(=N—R")— (II)

where R' and R" independently of one another stand for hydrogen, (C_1–C_6)-alkoxycarbonyl, (C_1–C_6)-alkylcarbonyl, (C_1–C_{18})-alkylcarbonyloxy-(C_1–C_6)-alkoxycarbonyl, (C_6–C_{14})-aryl-(C_1–C_6)-alkoxycarbonyl or hydroxyl;

R[2] denotes hydrogen or phenyl;

R[3] denotes —CO—NH—R[4], where —NH—R[4] stands for the radical of an α-amino acid, its ω-amino-(C_2–C_8)-alkylamide or its (C_1–C_8)-alkyl or benzyl ester, or where R_4 denotes methyl which is substituted by an amino acid side chain and also by a radical from the series —SO_2—OH, —SO_2—NHR[9] and tetrazolyl;

R[9] denotes hydrogen, aminocarbonyl, (C_1–C_{18})-alkylaminocarbonyl, (C_3–C_8)-cycloalkylaminocarbonyl, (C_1–C_{18})-alkyl or (C_3–C_8)-cycloalkyl;

and their physiologically tolerable salts.

5,703,051

THERAPEUTIC USES OF MELANIN

David L Berliner, Atherton; Robert L. Erwin, and David R. McGee, both of Vacaville, all of Calif., assignors to Biosource Technologies, Inc., Vacaville, Calif.

Division of Ser. No. 609,311, Nov. 5, 1990, Pat. No. 5,189,024, which is a continuation-in-part of Ser. No. 331,123, Mar. 31, 1989, abandoned, which is a continuation-in-part of Ser. No. 243,736, Sep. 13, 1988, abandoned. This application Dec. 10, 1992, Ser. No. 988,739

Int. Cl.[6] A61K *31/40;47/06;47/46*

U.S. Cl. 514—21 **4 Claims**

1. A method of administering a therapeutic agent to tissues within a mammal that share a common embryological basis as the nervous system using a carrier for the therapeutic agent wherein said carrier is a melanin wherein the therapeutic agent is used for a therapy with tissues in a mammal that share a common embryological basis with the nervous system.

5,703,052

STERODIAL GLYCOSIDES FOR TREATING HYPERCHOLESTEROLEMIA

Michael Paul Deninno, Gales Ferry, and Peter Andrew McCarthy, Pawcatuck, both of Conn., assignors to Pfizer Inc., New York, N.Y.

Division of Ser. No. 351,470, Dec. 20, 1994, Pat. No. 5,629,295, which is a continuation-in-part of Ser. No. 904,914, Jun. 26, 1992, abandoned. This application Jun. 6, 1995, Ser. No. 470,554

Int. Cl.[6] A61K *31/705*

U.S. Cl. 514—26 **14 Claims**

1. A spirostanyl glycoside of Formula IA

Formula IA

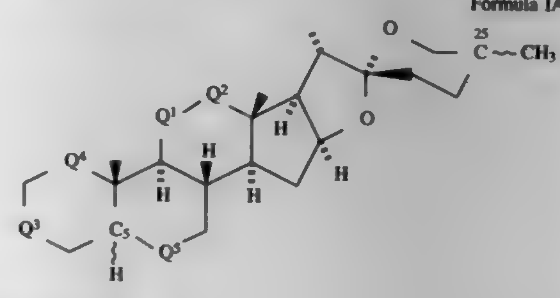

wherein either (A):

Q[1] is carbonyl,

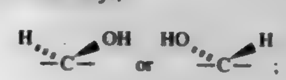

Q[2] is carbonyl, methylene,

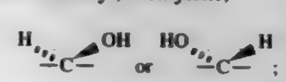

Q[3] is

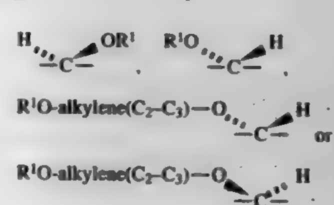

Q[4] and Q[5] are both methylene;

C_{25} is (S);

and wherein

R[1] is

β-D-glucopyranosyl,

β-D-glucopyranuronosyl,

β-D-2-acetamido-2-deoxy-glucopyranosyl,

β-D-galactopyranosyl,

β-D-fucopyranosyl,

β-L-fucopyranosyl,

β-D-xylopyranosyl,

β-L-xylopyranosyl,

α-D-arabanopyranosyl,

α-L-arabanopyranosyl,

α-D-cellobiosyl,

β-D-cellobiosyl,

β-D-lactosyl,

β-D-maltosyl,

β-D-gentiobiosyl,

3-O-β-D-galactopyranosyl-α-D-arabanopyranosyl or β-D-maltotriosyl;

or (B):

Q[1], Q[4] and Q[5] are all methylene;

Q[2] is

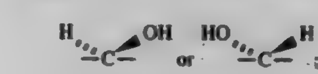

Q[3] is

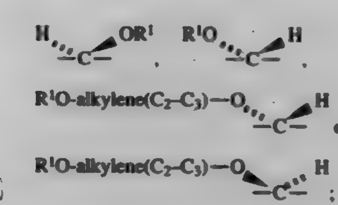

and wherein

R[1] is

β-D-glucopyranosyl,

β-D-glucopyranuronosyl,

β-D-2-acetamido-2-deoxy-glucopyranosyl,

β-D-fucopyranosyl,

β-L-fucopyranosyl,

β-D-xylopyranosyl,

β-L-xylopyranosyl,

α-D-arabanopyranosyl,

α-L-arabanopyranosyl,

β-D-cellobiosyl,

β-D-lactosyl,

β-D-maltosyl,

β-D-gentiobiosyl,

3-O-β-D-galactopyranosyl-α-D-arabanopyranosyl or β-D-maltotriosyl;

or (C):

Q[1], Q[4] and Q[5] are all methylene;

Q[2] is carbonyl;

Q[3] is

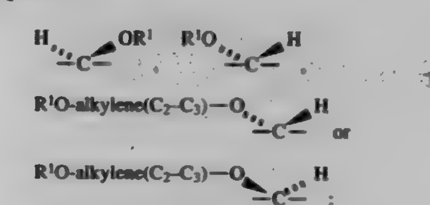

C_{25} is (R);

and wherein

R[1] is

β-D-glucopyranuronosyl,

β-D-2-acetamido-2-deoxy-glucopyranosyl,

β-D-fucopyranosyl,

β-L-fucopyranosyl,

β-D-xylopyranosyl,

β-L-xylopyranosyl,

α-D-arabanopyranosyl,

α-L-arabanopyranosyl,

β-D-cellobiosyl,

β-D-lactosyl,

β-D-maltosyl,

β-D-gentiobiosyl,

3-O-β-D-galactopyranosyl-α-D-arabanopyranosyl or β-D-maltotriosyl.

5,703,053

FLAVONE TASTE MODIFIERS

Robert J. Kurtz, New York, N.Y., and William D. Fuller, San Diego, Calif., assignors to Bioresearch, Inc., Arlington, Va.

Division of Ser. No. 451,063, May 25, 1995, Pat. No. 5,637,618, which is a continuation of Ser. No. 67,537, May 26, 1993, abandoned, which is a continuation-in-part of Ser. No. 799,207, Nov. 27, 1991, abandoned, which is a continuation-in-part of Ser. No. 531,388, Jun. 1, 1990, Pat. No. 5,232,735. This application Jun. 1, 1995, Ser. No. 457,429

Int. Cl.[6] A61N *43/16*

U.S. Cl. 514—27 **13 Claims**

1. A composition comprising an eatable having at least one taste selected from bitter, burning, and metallic, and at least one tastand in a substantially tasteless amount of about 0.0000001 to 300% by weight, which amount is sufficient to reduce said at least one bitter, burning and metallic taste, and wherein said tastand is selected from the group of compounds which are substantially tasteless in the amount used and have the structure:

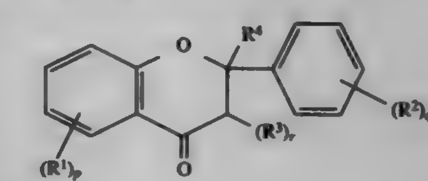

wherein p is selected from 1, 2, 3, or 4; q is selected from 1, 2, 3, 4, or 5; the substituents R[1] and R[2] are independently selected from the group consisting of H, hydroxy, nitro, cyano, halogen, COOH, SO_3H, $CH_2SO_2NH_2$, trifluoroacetyl, an acid group of the structure ZO_qH, wherein Z is an element selected from the group consisting of carbon, sulfur, boron or phosphorus, q is an integer from 2 to 3 and r is an integer from 1 to 3; and an O, S, N or phosphorylated glycoside, where the glycoside is selected from the group consisting of monosaccharides, disaccharides, trisaccharides, and oligosaccharides all of which saccharides may be substituted; and the following groups which may be substituted or unsubstituted: amino, alkyl, alkoxy, aryl, alkylene, aminoacyl, aryloxy, aralkoxy, acyl, arylacyl, benzoyl, alkylamino, dialkylamino, trialkylamino, carbonates, alkylcarbonates, arylcarbonates, acylamino, guanidino, alkylguanidino, acylguanidino, arylguanidino, alkylurethanes, arylurethanes, ureas, alkylureas, CHO, $COCH_3$, $COCH_3$, CH_2CHO, CH_2COOH, $COOCH_3$, '$OCOCH_3$, $CONH_2$, NHCHO, SCH_3, SCH_2CH_3, CH_2SCH_3, SO_2NH_2, SO_2CH_3, CH_2SO_3H, cycloalkyl, heterocyclic, polycyclic, arylureas, carboxylic acid ester, carboxamide, N-alkyl carboxamide, di-alkyl carboxamides, and wherein any two substituents taken together can be an aliphatic chain linked to a phenyl ring at one or more positions either directly via a carbon atom or indirectly via an oxygen, nitrogen or sulfur atom to form a ring structure; r is 1 or 2; the substituents R[3] and R[4] are independently selected from the group consisting of H, trifluoromethyl, halogen, cyano; and substituted or unsubstituted alkyl, alkylene, branched alkyl, branched alkylene, aryl, aralkyl, cycloalkyl, acyl, benzoyl, alkoxy, aryloxy, heterocyclic, polycyclic; where CH—CH or CH_2—CH_2 bonds exist the level of unsaturation may be increased by removing one or more hydrogen atoms from the carbon atoms participating in the CH—CH or CH_2—CH_2 bond; with the proviso that when p is 2 and the two R[1]'s are 7-O-β-neohesperidosyl and 5-hydroxy, q is 2 and one R[2] is 4'-hydroxy

and one R^3 and R^4 have been eliminated to give a double bond, the other R^2 cannot be 3'-methoxy; and physiologically acceptable salts of all of the foregoing compounds.

5,703,054

OLIGONUCLEOTIDE MODULATION OF PROTEIN KINASE C

C. Frank Bennett, Carlsbad, and Nicholas Dean, Cardiff-by-the-Sea, both of Calif., assignors to Isis Pharmaceuticals, Inc., Carlsbad, Calif.

Continuation-in-part of Ser. No. 852,852, Mar. 16, 1992, abandoned. This application Jul. 9, 1993, Ser. No. 89,996

Int. Cl.⁶ A61K *31/70*

U.S. Cl. 514—44 **21 Claims**

1. An isolated and purified oligonucleotide consisting of a nucleotide sequence selected from the group consisting of SEQ ID NO: 2 and SEQ ID NO: 5.

5,703,055

GENERATION OF ANTIBODIES THROUGH LIPID MEDIATED DNA DELIVERY

Philip L. Felgner, Rancho Santa Fe, Calif.; Jon Asher Wolff, Madison, Wis.; Gary H. Rhodes, Leucadia, Calif.; Robert Wallace Malone, Davis, Calif., and Dennis A. Carson, Del Mar, Calif., assignors to Wisconsin Alumni Research Foundation, Madison, Wis., and Vical Incorporated, San Diego, Calif.

Division of Ser. No. 496,991, Mar. 21, 1990, abandoned, which is a continuation-in-part of Ser. No. 467,881, Jan. 19, 1990, abandoned, which is a continuation-in-part of Ser. No. 326,305, Mar. 21, 1989, abandoned. This application Jan. 26, 1994, Ser. No. 187,630

Int. Cl.⁶ A61K *48/00;39/395;39/00;* **C12P** *21/06*

U.S. Cl. 514—44 **12 Claims**

1. A method of generating desired antibodies in a mammal comprising:

directly administering to a tissue of a mammal a DNA sequence operatively linked to a promoter or a mRNA sequence encoding an immunogen, said sequence being complexed to a cationic lipid, in an amount sufficient to induce the detectable production of desired antibodies to the expressed immunogen.

5,703,056

NON-INVASIVE IMAGING OF GENE TRANSFER

Ronald G. Blasberg, Riverside, Conn., and Juri Tjuvajev, Brooklyn, N.Y., assignors to Sloan-Kettering Institute for Cancer Research, New York, N.Y.

Filed Mar. 15, 1995, Ser. No. 404,513

Int. Cl.⁶ A01N *43/04;* **A61K** *31/70*

U.S. Cl. 514—44 **13 Claims**

1. A method of detecting gene transfer to and expression in a target tissue of a host subject comprising:

(a) delivering to the target tissue of the host subject a transfer vector containing a marker gene not naturally present in the host subject wherein the marker gene is selected from the group consisting of wild-type, mutant or genetically engineered herpes simplex virus-thymidine kinase gene, and wherein the transfer vector is introduced to cells of the target tissue, and the marker gene is expressed in the cells of the target tissue, thereby generating a marker gene product which accumulates only in the cells containing the transfer vector;

(b) administering to the host subject a labeled marker substrate where cells expressing the marker gene product of step (a) metabolizes the labeled marker substrate to produce a labeled marker metabolite wherein the labeled marker substrate comprises a labeled 2'-fluoro-nucleoside analogue; and

(c) non-invasively imaging the target tissue or cells containing the labeled marker metabolite after clearance of residual marker substrate not metabolized by the marker gene product from said host subject thereby detecting gene transfer to and expression in the target tissue.

5,703,057

EXPRESSION LIBRARY IMMUNIZATION

Stephen A. Johnston, Dallas; Michael A. Barry, Carrollton, and Wayne C. Lai, Richardson, all of Tex., assignors to Board of Regents The University of Texas System, Austin, Tex.

Filed Apr. 7, 1995, Ser. No. 421,155

Int. Cl.⁶ A01N *43/04*

U.S. Cl. 514—44 **30 Claims**

1. A method of obtaining gene sequences effective for generating an immune response specific to a pathogen in a vertebrate animal, comprising:

a) preparing a set of cloned expression libraries from cDNA, fragmented DNA or a plurality of sequenced genes obtained from the pathogen;

b) introducing a plurality of clones containing a library or sublibrary into a vertebrate animal; and

c) selecting from the library or sublibrary the gene sequences that effect said immune response.

5,703,058

COMPOSITIONS CONTAINING 5-FLUORO-2',3'-DIDEHYDRO-2',3'-DIDEOXYCYTIDINE OR A MONO-, DI-, OR TRIPHOSPHATE THEREOF AND A SECOND ANTIVIRAL AGENT

Raymond F. Schinazi, Decatur, and Dennis C. Liotta, McDonough, both of Ga., assignors to Emory University, Atlanta, Ga.

Filed Jan. 27, 1995, Ser. No. 379,276

Int. Cl.⁶ A61K *31/70;38/21;* **C07H** *19/04;19/20;19/09;19/10*

U.S. Cl. 514—45 **19 Claims**

1. A composition comprising an effective HIV or HBV treatment amount of a compound of the formula:

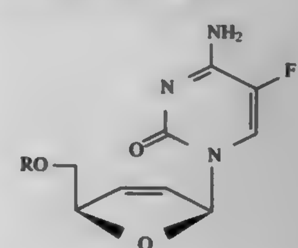

wherein R is hydrogen, monophosphate, diphosphate, or triphosphate; in combination or alternation with a second compound selected from the group consisting of 2-hydroxymethyl-5-(5-fluorocytosin-1-yl)-1,3-oxathiolane, 2 -hydroxymethyl-5-(cytosin-1-yl)-1,3-oxathiolane; 9-[4-(hydroxymethyl)-2-cyclopenten-1-yl]-guanine (carbovir), 9-[(2-hydroxyethoxy)methyl]guanine (acyclovir) interferon, 3'-deoxy-3'-azidothymidine (AZT), 2',3'-dideoxyinosine (DDI), 2',3'-dideoxycytidine (DDC), (−)-2'-fluoro-5-methyl-β-L-ARAuridine (L-(−)-FMAU) and 2',3'-didehydro-2',3'-dideoxythymidine (D4T).

5,703,059

DISACCHARIDE LIGANDS FOR SELECTINS

Nigel Mark Allanson, and Alan Hornsby Davidson, both of Cowley, Great Britain, assignors to British Biotech Pharmaceuticals Ltd., Oxford, Great Britain

PCT No. PCT/GB94/00088, § 371 Date Apr. 12, 1996, § 102(e) Date Apr. 12, 1996, PCT Pub. No. WO94/17084, PCT Pub. Date Aug. 4, 1994

PCT Filed Jan. 19, 1994, Ser. No. 492,002

Claims priority, application United Kingdom, Jan. 19, 1993, 9300989

Int. Cl.⁶ A61K *31/715;* **C07H** *15/00*

U.S. Cl. 514—53 **21 Claims**

1. A compound of formula (I), or a salt, solvate or hydrate thereof:

(I)

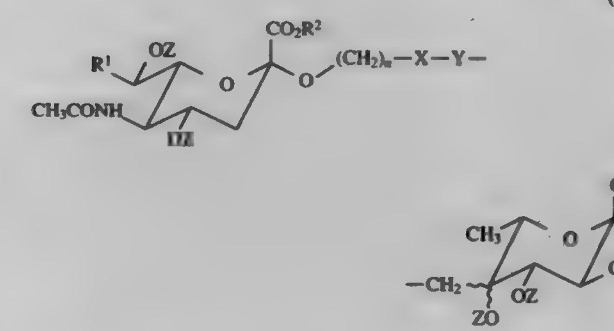

wherein:

X represents a divalent group selected from those of formulae I(a) to I(g) below

−CH=CH− I(a)

$-CH_2CH_2-$ I(b)

−CH(OH)CH(OH)− I(c)

I(d)

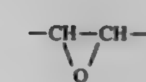

I(e)

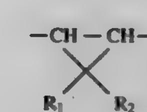

I(f)

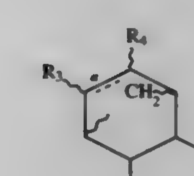

I(g)

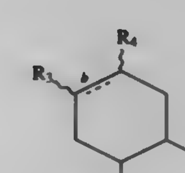

wherein

R_1 and R_2 independently represent hydrogen, C_{1-3} alkyl or $-COOR_6$ where R_6 is C_{1-6} alkyl; and R_3 and R_4 independently represent hydrogen, hydroxyl or C_{1-3} alkyl; and bonds a and b may be single or double;

Y represents a single bond or a divalent group selected from those of formulae I(h) to I(j) below

>C=O I(h)

>CHOH I(i)

$>CHOR_5$ I(j)

wherein

R_5 represents C_{1-3} alkyl or a glycosyl residue;

each Z independently represents hydrogen or a hydroxyl protecting group;

R^1 represents hydrogen or a group $-CH(OZ)CH_2(OZ)$ wherein Z has the meaning defined above;

R^2 represents hydrogen, a pharmaceutically acceptable cation, C_{1-6} alkyl, C_{2-6} alkenyl, or (optionally substituted)phenyl-(C_{1-4}) alkyl;

R^3 represents hydrogen, C_{1-6} alkyl, (C_{1-4}) alkyl-substituted phenyl or benzoate; and

n is 1, 2 or 3.

5,703,060

USES OF ALOE PRODUCTS IN THE PREVENTION AND TREATMENT OF INFECTIONS AND INFESTATIONS

Bill H. McAnalley, Grand Prairie; Robert H. Carpenter, Bastrop, and Harley R. McDaniel, Dallas, all of Tex., assignors to Carrington Laboratories Inc., Irving, Tex.

Division of Ser. No. 159,830, Dec. 1, 1993, Pat. No. 5,441,943, which is a division of Ser. No. 864,583, Apr. 7, 1992, Pat. No. 5,308,838, which is a division of Ser. No. 558,905, Jul. 27, 1990, Pat. No. 5,118,673, which is a continuation-in-part of Ser. No. 229,164, Aug. 5, 1988, Pat. No. 5,106,616, which is a continuation-in-part of Ser. No. 144,872, Jan. 14, 1988, Pat. No. 4,851,224, which is a continuation-in-part of Ser. No. 869,261, Jun. 5, 1986, Pat. No. 4,735,935, which is a continuation-in-part of Ser. No. 810,025, Dec. 17, 1985, abandoned, which is a continuation-in-part of Ser. No. 754,859, Jul. 12, 1985, abandoned, which is a continuation-in-part of Ser. No. 750,321, Jun. 28, 1985, abandoned, which is a continuation-in-part of Ser. No. 649,967, Sep. 12, 1984, abandoned, which is a continuation of Ser. No. 375,720, May 7, 1982, abandoned. This application Jun. 5, 1995, Ser. No. 463,019

Int. Cl.⁶ A61K *31/715*

U.S. Cl. 514—54 **6 Claims**

1. A method for preventing an animal from being infected by an infectious organism, comprising:

administering to said animal an amount of acetylated mannan derivative sufficient to prevent infection by said infectious organism.

5,703,061

Patent Not Issued For This Number

5,703,062

N-HET-SUBSTITUTED GLYCEROPHOSPHOETHANOLAMINES

Haridasan K. Nair, Madison, Wis., assignor to Clarion Pharmaceuticals Inc., Madison, Wis.

Filed Nov. 15, 1996, Ser. No. 749,511

Int. Cl.^{6} A61K *31/685*

U.S. Cl. 514—77 **29 Claims**

21. A pharmaceutical composition comprising an effective anti-tumor, anti-psoriatic, anti-inflammatory or PAF antagonist amount of an N-Het-substituted glycerophosphoethanolamine of the formula:

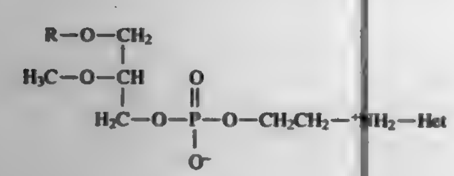

an isomeric form thereof, or a pharmaceutically acceptable salt of either; wherein R represents a substituted or unsubstituted straight or branched chain C_{14-20} alkyl or alkenyl, said substituent being one or more of halo, C_{1-3} alkoxy or cyano, provided that a double bond of said alkenyl does not involve the carbon atom of said alkenyl that is bonded to the oxygen of the glyceryl backbone; and Het represents a 5- to 9-membered monocyclic or bicyclic fused ring system with 1 to 3 heteroatoms, each heteroatom selected from oxygen, sulfur and nitrogen, and provided that Het is not an imidazolinyl ring system; and the pharmaceutically acceptable salts thereof; and a pharmaceutically acceptable carrier.

5,703,063

PHOSPHOCHOLINE DRUG DERIVATIVES

Fred I. Chasalow, Glen Cove, N.Y., assignor to Amur Research Corp., Belmont, Calif.

Continuation of Ser. No. 348,355, Nov. 30, 1994, abandoned. This application Nov. 12, 1996, Ser. No. 748,025

Int. Cl.^{6} A61K *31/685*

U.S. Cl. 514—78 **10 Claims**

1. A pharmaceutical formulation comprising a phosphocholine-conjugated pharmaceutically active agent, said agent being selected from the group consisting of testosterone, estradiol, dehydroepiandrosterone, and etiocholanolone, and a pharmaceutically-acceptable carrier or diluent.

5,703,064

PESTICIDAL COMBINATIONS

Shinji Yokoi; Akira Nishida, both of Shiga-ken; Tokio Obata, and Kouichi Goka, both of Ube, all of Japan, assignors to Sankyo Company, Limited, Tokyo, and Ube Industries Ltd., Ube, both of Japan

Filed Mar. 16, 1995, Ser. No. 405,795

Claims priority, application Japan, Mar. 16, 1994, HEI6-045405

Int. Cl.^{6} A01N *43/54;57/00*

U.S. Cl. 514—80 **3 Claims**

1. A miticidal composition comprising a synergistic insecticidally effective amount of a mixture of 1:20 to 1:33 of pyrimidifen to quinalphos.

5,703,065

HETEROARYLAMINO AND HETEROARYLSULFONAMIDO SUBSTITUTED 3-BENYZLAMINOMETHYL PIPERIDINES AND RELATED COMPOUNDS

Harry R. Howard, Jr., Bristol, Conn., assignor to Pfizer Inc., New York, N.Y.

PCT No. PCT/IB94/00221, § 371 Date May 7, 1996, § 102(e) Date May 7, 1996, PCT Pub. No. WO95/03908, PCT Pub. Date Mar. 23, 1995

Continuation of Ser. No. 123,306, Sep. 17, 1993, abandoned. This PCT application Jul. 18, 1994, Ser. No. 615,257

Int. Cl.^{6} C07D *211/56;277/42;417/12;* **A61K** *31/425*

U.S. Cl. 514—183 **13 Claims**

1. A compound of the formula

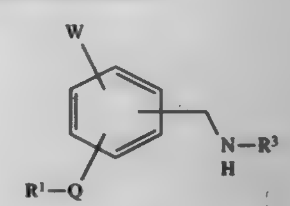

or a pharmaceutically acceptable salt thereof, wherein:

Q is —NH—, —N(C_1–C_6 alkyl)-, or —SO_2N(C_1–C_6 alkyl)-, wherein the foregoing —SO_2N(C_1–C_6 alkyl)- moiety attaches to the phenyl group through the nitrogen atom and attaches to R^1 through the sulfur atom;

W is hydrogen, C_1–C_6 alkyl, —S(C_1–C_3 alkyl), halo or C_1–C_6 alkoxy, wherein the alkyl moieties of the foregoing W groups are optionally substituted with 1 to 3 fluoro substituents;

R^1 is a heteroaryl group selected from the group consisting of thiazolyoxazolyllyl, thienyl, triazolyl, oxazolyl, oxadiazolyl, thiadiazolyl, imidazolyl, pyridinyl, and pyrimidinyl, wherein said heteroaryl groups are optionally substituted with 1 to 3 substituents independently selected from phenyl, C_1–C_6 alkyl, halo, and C_1–C_6 alkoxy wherein the alkyl moieties of said optional substituents are optionally substituted with 1 to 3 fluoro substituents;

R^3 is group of the formula VII

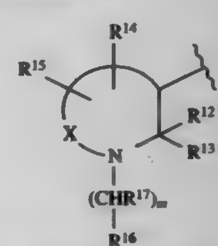

VII

wherein X is $(CH_2)_q$ wherein q is an integer ranging from 1 to 6, and m is an integer ranging from 0 to 8;

R^{12} is hydrogen, C_1–C_6 alkyl, C_3–C_7 cycloalkyl; aryl selected from biphenyl, phenyl, indanyl, and naphthyl; heteroaryl selected from thienyl, furyl, pyridyl, thiazolyl, isothiazolyl, oxazolyl, isoxazolyl, triazolyl, tetrazolyl, and quinolyl; benzhydryl or —(C_1–C_6 alkyl)-(phenyl), wherein the foregoing aryl and heteroaryl groups and the phenyl moieties of said (phenyl)C_1–C_6 alkyl and benzhydryl groups are optionally substituted with 1 to 3 substituents independently selected from halo, nitro, C_1–C_{10} alkyl, C_1–C_{10} alkoxy, amino, (C_1–C_6 alkoxy)C_1–C_6 alkyl, —NH(C_1–C_6 alkyl), —C(O)O(C_1–C_6 alkyl), —(C_1–C_6 alkyl)C(O)(C_1–C_6 alkyl), —OC(O)(C_1–C_6 alkyl), —(C_1–C_6 alkyl)C(O)O(C_1–C_6 alkyl), —(C_1–C_6 alkoxy)C(O)(C_1–C_6 alkyl), —C(O)(C_1–C_6 alkyl), —N(C_1–C_6 alkyl)(C_1–C_6 alkyl), —C(O)NH(C_1–C_6 alkyl), —NHC(O)H, and —NHC(O)(C_1–C_6 alkyl);

R^{13} is hydrogen, phenyl or C_1–C_6 alkyl;

R^{14} and R^{15} are each independently selected from hydrogen, hydroxy, halo, amino, carboxy, cyano, hydroxy-substituted C_1–C_6 alkyl, C_1–C_6 alkoxy, —(C_1–C_6 alkyl)-(C_1–C_6 alkoxy), —NH(C_{1-C6} alkyl), —C(O)O(C_1–C_6 alkyl), —OC(O)(C_1–C_6 alkyl), —(C_1–C_6 alkyl)C(O)(C_1– C_6 alkyl), —(C_1–C_6 alkyl)C(O)O(C_1–C_6 alkyl), —(C_1–C_6 alkoxy)C(O)(C_1–C_6 alkyl), —C(O)(C_1–C_6 alkyl), —N(C_1–C_6 alkyl)(C_1– C_6 alkyl), —C(O)NH(C_1–C_6 alkyl), —NHC(O)H, —NHC(O)(C_1–C_6 alkyl), and the radicals set forth in the definition of R^{12};

R^{16} is —NHC(O)R^{18}, —$NHCH_2R^{18}$, —SO_2R^{18}, —CO_2H or one of the radicals set forth in any of the definitions of R^{12}, R^{14}, and R^{15};

R^{17} is oximino (═NOH) and R^{16} is absent, or R^{17} is one of the radicals set forth in any of the definitions of R^{12}, R^{14}, and R^{15}; and,

R^{18} is C_1–C_6 alkyl, hydrogen, phenyl or —(C_1–C_6 alkyl)(phenyl);

with the proviso that (a) when m is 0, then one of R^{16} and R^{17} is absent and the other is hydrogen; and (b) when R^{14} and R^{15} are attached to the same carbon atom, then R^{14} and R^{15} are each independently selected from hydrogen, fluoro, C_1–C_6 alkyl, hydroxy-substituted C_1–C_6 alkyl and —(C_1–C_6 alkyl)-(C_1–C_6 alkoxy).

5,703,066

PROGESTATIONALLY ACTIVE 19,11-BRIDGED 4-ESTRENES

Eckhard Ottow; Wolfgang Schwede; Wolfgang Halfbrodt; Karl-Heinrich Fritzemeier, and Rolf Krattenmacher, all of Berlin, Germany, assignors to Schering Aktiengesellschaft, Berlin, Germany

Division of Ser. No. 135,486, Oct. 13, 1993, Pat. No. 5,523,298. This application Jun. 7, 1995, Ser. No. 484,318

Claims priority, application Germany, Oct. 13, 1992, 42 35 220.7

Int. Cl.^{6} C07J *75/00;53/00;* **A61K** *31/58;31/56*

U.S. Cl. 514—173 **13 Claims**

1. A 19,11-Bridged 4-estrene of general formula I

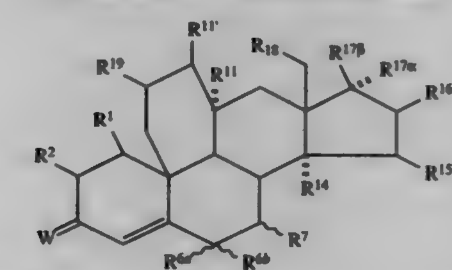

(I)

in which

W is the hydroxyimino group, /N–OH, or two hydrogen atoms;

R^1 and R^2 are each a hydrogen atom or together form an additional bond or form a methylene bridge in α-position;

R^{6a} and R^{6b} are each a hydrogen atom or together form a methylene group or together form a three-membered ring with carbon atom 6, R^7 is a hydrogen atom, a straight-chain or branched-chain, saturated alkyl radical in the α- or β-position with up to 4 carbon atoms or a thio group —SR^{20}, in which R^{20} is a hydrogen atom or an alkanoyl group with 1 to 4 carbon atoms;

R^{6a} is a hydrogen atom or a fluorine, chlorine, bromine or iodine atom or a straight-chain or branched-chain, saturated alkyl radical in the α- or β-position with up to 4 carbon atoms, and R^{6b} and R^7 are each a hydrogen atom or together form an additional bond; or

R^{6b} and R^7 together are a methylene bridge in the α- or β-position, and R^{6a} is a hydrogen atom;

R^{14}, R^{15} and R^{16} are each a hydrogen atom; or

R^{14} is a hydrogen atom in the α-position and R^{15} and R^{16} together form an additional bond or form a methylene bridge in the α- or β-position; or

R^{14} and R^{15} are each a hydrogen atom and R^{16} is a C_{1-4}-alkyl group in the α- or β-position or together with $R^{17\alpha}$ forms a methylene bridge in the α-position and $R^{17\beta}$ is a group

—C(═O)—R^{22};

R^{16} is a hydrogen atom and R^{14} and R^{15} together form an additional bond;

R^{11}, $R^{11'}$ and R^{19} are each a hydrogen atom; or

R^{11} is a hydrogen atom in the α-position, and $R^{11'}$ and R^{19} together form an additional bond; or

R^{19} is a hydrogen atom and R^{11} and $R^{11'}$ together form an additional bond,

$R^{17\beta}$/$R^{17\alpha}$ are the following combinations:

—OR^{21}/—$(CH_2)_n$—A,

—OR^{21}/—$(CH_2)_m$—C≡C—B,

—OR^{21}/—$(CH_2)_p$—CH═CH—$(CH_2)_k$—D,

—OR^{21}/—HC═C═CEG,

—OR^{21}/—CF_3,

—C(═O)—R^{22}/—OR^{23},

—C(═O)—R^{22}/—C_{1-4}-alkyl, or

—C(═O)—R^{22}/—F

or $R^{17\beta}$/$R^{17\alpha}$ together form

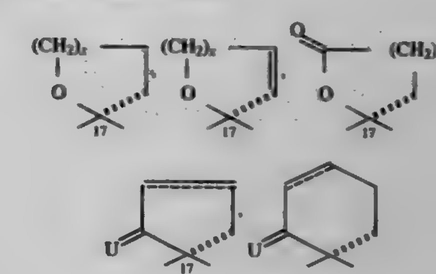

wherein x=1 or 2,

U = O or <(OH)(H)

and when, $R^{17\beta}$/$R^{17\alpha}$ forms a ring, W is additionally an oxygen atom

R^{21} and R^{23} are each a hydrogen atom, a C_{1-4}-alkyl or a C_{1-4}-alkanoyl group;

R^{22} is a C_{1-3}-alkyl group;

A is a hydrogen atom, a cyano group, —$COOR^{24}$ or —OR^{25} in which R^{24} is C_{1-4}-alkyl and R^{25} is hydrogen, C_{1-4}-alkyl or C_{1-4}-alkanoyl;

B is a hydrogen atom; a C_{1-4}-alkyl group; a C_2- or C_3-alkinyl group; a fluorine, chlorine, bromine or iodine atom; a hydroxyalkyl, alkoxyalkyl or alkanoyloxyalkyl group with 1 to 4 carbon atoms each in the alkyl, alkoxy or alkanoyloxy part;

D is a hydrogen atom, a hydroxy, C_{1-4}-alkoxy or C_{1-4}-alkanoyloxy group;

E and G are each hydrogen or C_{1-3}-alkyl;

n is 0, 1, 2, 3 or 4;

m is 0, 1 or 2;

p is 0 or 1;

k is 0, 1, 2 or 3; and

R^{18} is a hydrogen atom or a methyl group.

5,703,067

INHIBITORS OF FARNESYL-PROTEIN TRANSFERASE

Hiranthi Jayasuriya, Edison; Russell B. Lingham, Watchung, both of N.J.; Fernando Pelaez; Manuel Sanchez, both of Madrid, Spain; Keith C. Silverman, Somerset, N.J.; Sheo Bux Singh, Edison, N.J., and Deborah L. Zink, Manalapan, N.J., assignors to Merck & Co., Inc., Rahway, N.J.

Filed May 8, 1995, Ser. No. 435,047

Int. Cl.^{6} A61K *31/575;* C07J *9/00*

U.S. Cl. 514—179 **7 Claims**

1. A compound which inhibits farnesyl-protein transferase of the formula I:

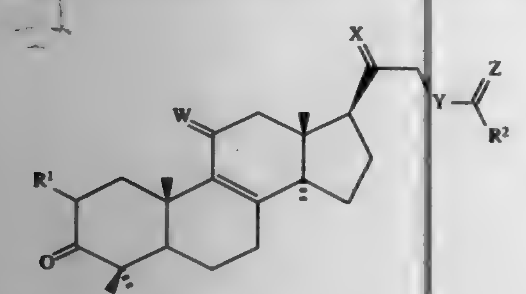

I

wherein:

R^1 is:

a) —OH; or

b)

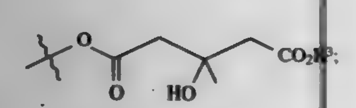

R^3 is hydrogen or C_{1-4} alkyl;

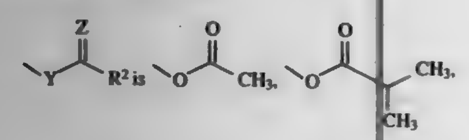

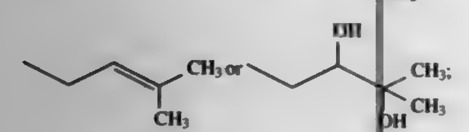

W is O or H_2; and

X is O or (H,CH_3);

or a pharmaceutically acceptable salt thereof.

5,703,068

PENEM COMPOUNDS

Hiromitsu Iwata; Takashi Nakatsuka, both of Osaka; Rie Tanaka, Ibaraki, and Masaji Ishiguro, Takarazuka, all of Japan, assignors to Suntory Limited, Osaka, Japan

PCT No. PCT/JP91/01100, § 371 Date Feb. 19, 1993, § 102(e) Date Feb. 19, 1993, PCT Pub. No. WO92/03444, PCT Pub. Date Mar. 5, 1992

PCT Filed Aug. 16, 1991, Ser. No. 971,827

Claims priority, application Japan, Aug. 20, 1990, 2-218543

Int. Cl.^{6} C07D *499/00;* A61K *31/43*

U.S. Cl. 514—195 **14 Claims**

1. A penem compound of the following formula (I):

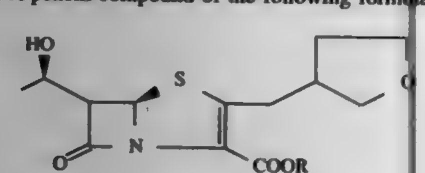

(I)

wherein

R represents a group of the following formula (II) or (III):

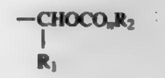

(II)

in which

R_1 is a hydrogen atom or a linear or branched, C_1–C_6 alkyl group or, together with R_2, forms an o-phenylene group;

R_2 is a C_1–C_6 alkyl group, a C_6–C_{10} aryl group, a C_7–C_{11} aralkyl group, said R_2 group or a substituted by one or more substituents selected from C_1–C_6 alkyl groups, C_6–C_{10} aryl groups, C_7–C_{11} aralkyl groups, hydroxyl groups, C_1–C_6 alkoxyl groups and halogen atoms; and

n is an integer of 1 or 2,

or

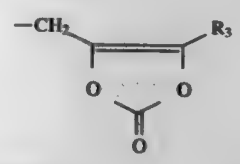

(III)

in which

R_3 represents a C_1–C_6 alkyl group, a C_6–C_{10} aryl group, a C_7–C_{11} aralkyl group, or a said R_3 group substituted by one or more substituents selected from C_1–C_6 alkyl groups, C_6–C_{10} aryl groups, C_7–C_{11} aralkyl groups, hydroxyl groups, C_1–C_6 alkoxyl groups and halogen atoms.

5,703,069

METHOD FOR INHIBITING AND CONTROLLING VIRAL GROWTH

David Thomas Connor, and Stephen Joseph Gracheck, both of Ann Arbor, Mich., assignors to Warner-Lambert Company, Morris Plains, N.J.

Division of Ser. No. 408,431, Mar. 22, 1995, Pat. No. 5,612,330, which is a continuation-in-part of Ser. No. 351,611, Dec. 12, 1994, Pat. No. 5,489,586, which is a continuation-in-part of Ser. No. 207,330, Mar. 7, 1994, abandoned. This application Sep. 11, 1996, Ser. No. 712,063

Int. Cl.^{6} A61K *31/55;* C07D *513/04*

U.S. Cl. 514—211 **11 Claims**

1. A method for substantially inhibiting HIV or the activation of HIV in an HIV-infected individual or suppressing the immune system which comprises administering a therapeutically effective amount of a compound of the following formula:

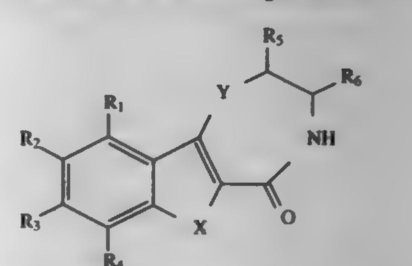

I

or a pharmaceutically acceptable acid addition salt thereof, wherein

R_1, R_2, R_3, and R_4 are each independently hydrogen, hydroxy, halogen, lower alkyl, lower alkoxy, benzyloxy, trifluoromethyl, nitro, or $-NR_8R_9$, in which R_8 and R_9 are each independently hydrogen or lower alkyl;

R_5 and R_6 are each independently hydrogen, lower alkyl or phenyl;

X is O, $S(O)_n$ or NR_7;

Y is O, $S(O)_n$ or NR_8;

R_7 is hydrogen, lower alkyl, phenyl, benzyl, CH_2OR_8 or lower alkyl, phenyl, benzyl substituted with halo;

R_8 is hydrogen, lower alkyl or phenyl;

n is an integer of 0, 1 or 2;

with the provisos that

1) when X is NH, Y is NH, R_1 is H, R_3 is H and R_4 is Br, R_2 is not methyl;
2) when X is NH, Y is NH, R_1, R_3 and R_4 are H, R_2 is not methoxy or ethoxy, and
3) when X is NH, Y is S, at least one of R_1, R_2, R_3 and R_4 is not H.

5,703,070

INDOLE, INDAZOLE AND BENZISOXAZOLE COMPOUNDS

Gilbert Lavielle, La Celle Saint Cloud; Olivier Muller, Ennery; Mark Millan, Paris, and Valérie Audinot, Croissy, all of France, assignors to Adir et Compagnie, Courbevoie, France

Filed Jun. 6, 1996, Ser. No. 663,464

Claims priority, application France, Jun. 7, 1995, 95 06663

Int. Cl.^{6} C07D *209/04;231/56;* A61K *31/40;31/41*

U.S. Cl. 514—212 **9 Claims**

1. A compound selected from the group having formula (I):

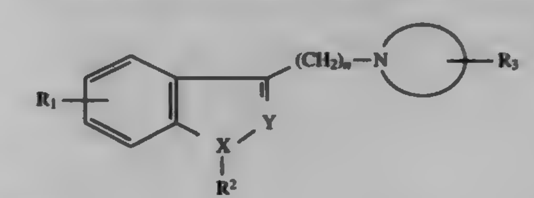

(I)

in which:

R_1 represents hydrogen, halogen, linear or branched $(C_1$–$C_6)$alkyl, linear or branched $(C_1$–$C_6)$alkoxy, trihalomethyl, or hydroxyl,

R_2 represents hydrogen or linear or branched $(C_1$–$C_6)$alkyl or a phenyl group which is unsubstituted or substituted by halogen, alkyl, alkoxy, hydroxyl, or trihalomethyl,

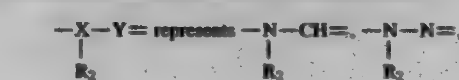

or represents —O—N=,

n is 1, 2, 3, 4, 5, or 6

represents any one of the following groups:

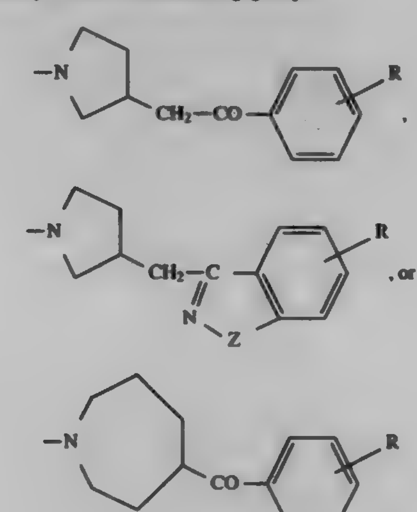

in which:

R represents hydrogen, halogen, linear or branched $(C_1$–$C_6)$alkyl, linear or branched $(C_1$–$C_6)$alkoxy, hydroxyl, or trihalomethyl,

Z represents oxygen, sulfur, or —NH—,

its isomers and its addition salts with a pharmaceutically-acceptable acid or base.

5,703,071

TROPOLONE DERIVATIVES AND PHARMACEUTICAL COMPOSITION THEREOF FOR PREVENTING AND TREATING ISCHEMIC DISEASES

Norio Itoh; Misao Kuwahara; Hiroshi Kushida, all of Ibaraki, Japan; William W. McWhorter, Parchment, Mich.; Syunji Nomura, Ibaraki, Japan; Kazunori Ozawa, Ibaraki, Japan; Mikio Taniguchi, Ibaraki, Japan, and Kazuo Tsuzuki, Ibaraki, Japan, assignors to Pharmacia & Upjohn Company, Kalamazoo, Mich.

Continuation of Ser. No. 975,924, Feb. 18, 1993, abandoned. This application May 18, 1995, Ser. No. 443,972

Claims priority, application Japan, Aug. 29, 1990, 2-229536; Jan. 31, 1991, 3-056252; Feb. 8, 1991, 3-039173

Int. Cl.^{6} A61K *31/55;31/495;* C07D *295/116;243/08*

U.S. Cl. 514—218 **6 Claims**

1. A compound of the formula:

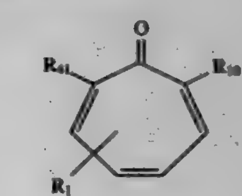

wherein R_{10} is a moiety of the formula II

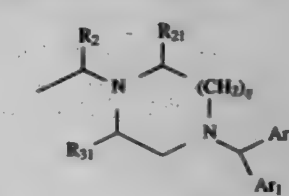

wherein R_1 and R_2 are the same or different and are:

(a) hydrogen,
(b) C_1–C_5 alkyl,
(c) aryl,
(d) 2-pyridyl, 3-pyridyl, or 4-pyridyl, or
(e) p-chlorophenyl, m-chlorophenyl, o-chlorophenyl, o,m-dichlorophenyl, p-fluorophenyl, p-nitrophenyl, m-nitrophenyl, o-nitrophenyl, p-cyanophenyl, m-cyanophenyl, o-cyanophenyl, p-methoxyphenyl, m-methoxyphenyl, o-methoxyphenyl, m,p-dimethoxyphenyl;

wherein R_{41} is

(a) $—OR_3$,
(b) $—OR_6$,
(c) $—NR_7R_8$,
(d) $—N(R_{51})—(CH_2)_m—R_{61}$, or
(e) a group represented by the formula IV

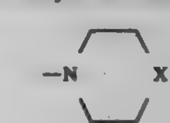

wherein R_3 is

(a) hydrogen,
(b) C_1–C_5 alkyl,
(c) C_1–C_5 alkyl substituted by —OH, $—COOR_5$, or —CN.
(d) C_7–C_{20} aralkyl,
(e) halogen;

wherein R_5 is
(a) hydrogen, or
(b) C_1–C_5 alkyl;
wherein R_6 is
(a) hydrogen,
(b) C_1–C_5 alkyl,
(c) C_1–C_5 alkyl substituted by OH, $COOR_5$ or CN, or
(d) C_7–C_{20} aralkyl;
wherein R_7 and R_8 are the same or different and are:
(a) hydrogen,
(b) C_1–C_5 alkyl,
(c) C_1–C_5 alkyl substituted by —OH, —$COOR_5$, or —CN, or
(d) C_7–C_{20} aralkyl;
wherein R_{11} is
(a) hydrogen,
(b) C_1–C_3 alkyl,
(c) aryl,
(d) 2-pyridyl, 3-pyridyl, or 4-pyridyl, or
(e) a substituted aryl selected from p-chlorophenyl, m-chlorophenyl, o-chlorophenyl, o,m-dichlorophenyl, p-fluorophenyl, p-trifluorophenyl, p-nitrophenyl, m-nitrophenyl, o-nitrophenyl, p-cyanophenyl, m-cyanophenyl, o-cyanophenyl, p-methoxyphenyl, m-methoxyphenyl, o-methoxyphenyl, m,p-dimethoxyphenyl;
wherein R_{21} and R_{31} are the same or different and are
(a) hydrogen, or
(b) C_1–C_3 alkyl;
wherein R_{61} is
(a) aryl,
(b) 2-pyridyl, 3-pyridyl, or 4-pyridyl,
(c) —OR_{71},
(d) —CO_2R_{81},
(e) —$NR_{91}R_{101}$, or
(f) a substituted aryl selected from p-chlorophenyl, m-chlorophenyl, o-chlorophenyl, o,m-dichlorophenyl, p-fluorophenyl, p-trifluorophenyl, p-nitrophenyl, m-nitrophenyl, o-nitrophenyl, p-cyanophenyl, m-cyanophenyl, o-cyanophenyl, p-methoxyphenyl, m-methoxyphenyl, o-methoxyphenyl, m,p-dimethoxyphenyl;
wherein R_{51}, R_{71}, and R_{81} are the same or different and are
(a) hydrogen, or
(b) C_1–C_3 alkyl;
wherein R_{91} and R_{101} are the same or different and are
(a) hydrogen,
(b) C_1–C_3 alkyl,
(c) aryl group,
(d) 2-pyridyl, 3-pyridyl, or 4-pyridyl, or
(e) a substituted aryl selected from p-chlorophenyl, m-chlorophenyl, o-chlorophenyl, o,m-dichlorophenyl, p-fluorophenyl, p-trifluorophenyl, p-nitrophenyl, m-nitrophenyl, o-nitrophenyl, p-cyanophenyl, m-cyanophenyl, o-cyanophenyl, p-methoxyphenyl, m-methoxyphenyl, o-methoxyphenyl, m,p-dimethoxyphenyl;
wherein Ar_1 and Ar_2 are the same or different aryl group optionally substituted by
(a) halogen,
(b) trihalomethyl,
(c) C_6–C_{10} aryl, or
(d) C_6–C_{10} aryl substituted by C_1–C_3 alkoxy;
wherein X is
(a) —O—,
(b) —CH_2—, or
(c) —N—$(CH_2)_p$—R_{11};
wherein m is 1, 2, 3, or 4;
wherein n is 0, 1, or 2;
wherein p is 0, 1, or 2; and
wherein q is 1 or 2;
or a pharmaceutically acceptable ester selected from those with acetic acid, propionic acid, and oxalic acid, or a pharmaceutically acceptable salt thereof.

5,703,072
BICYCLIC NONANE AND DECANE COMPOUNDS HAVING DOPAMINE RECEPTOR AFFINITY

Patricia L. Power, Guelph, and Sumanas Rakhit, Mississauga, both of Canada, assignors to Allelix Biopharmaceuticals, Ontario, Canada

Continuation-in-part of Ser. No. 354,906, Dec. 12, 1994, Pat. No. 5,576,314. This application Apr. 1, 1996, Ser. No. 625,358
Int. Cl.[6] A61K *31/55;* **C07D** *471/04;487/04*
U.S. Cl. 514—211 **43 Claims**

1. A compound of Formula I:

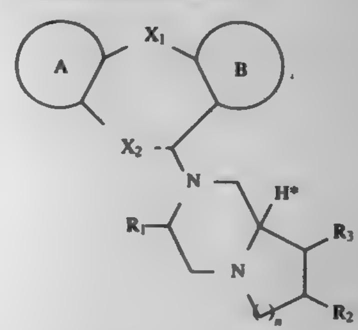

wherein:
A and B are independently selected from substituted or unsubstituted benzene;
X_1 is selected from O, S, SO, and SO_2;
X_2— is N=;
n is 1 or 2;
R_1 is selected from H and the α-carbon side chain of an amino acid;
R_2 and R_3 are selected independently from H, OH, —NH_2, —$C(O)NH_2$, =O, =S, halo, cyano, C_{1-9}alkyl, C_{1-9}alkoxy, C_{1-4}alkylS—, C_{1-4}alkylSO—, C_{1-4}alkylSO_2—, phenoxy, benzyloxy and piperonyloxy; and
H* is in either the R- or the S-configuration, and
acid addition salts, solvates and hydrates thereof.

26. A pharmaceutical composition, comprising a compound according to claim **1** in an amount effective to antagonize D4 receptor stimulation, and a pharmaceutically acceptable carrier.

35. A method for the treatment of a medical condition mediated by D4 receptor stimulation, comprising administering to a mammal in need of such treatment, a composition according to claim **26**.

5,703,073
COMPOSITIONS AND METHODS TO PREVENT TOXICITY INDUCED BY NONSTEROIDAL ANTIINFLAMMATORY DRUGS

David S. Garvey, Waltham; L. Gordon Letts, Dover; H. Burt Renfroe, Wellesley, and Sang William Tam, Dover, all of Mass., assignors to NitroMed, Inc., Bedford, Mass.

Continuation-in-part of Ser. No. 425,090, Apr. 19, 1995. This application Oct. 13, 1995, Ser. No. 543,208
Int. Cl.[6] A61K *31/54;31/50;31/505;31/40;31/44*
U.S. Cl. 514—226.5 **20 Claims**

1. A non-steroidal antiinflammatory agent having the structure

wherein X is (1) —Y—$[C(R_b)(R_c)]$p—G—$[C(R_b)(R_c)]_p$—T—NO, wherein G is (i) a covalent bond; (ii) —T—C(O)—; (iii) —C(O)—T; (iv) —C(Y—C(O)—R_m)— wherein R_m is heteroaryl or heterocyclic ring; and in which Y is oxygen, sulfur or NR_i in which NR_i is hydrogen or lower alkyl, R_b and R_c are independently selected from, hydrogen, lower alkyl, cycloalkyl, aryl, heteroaryl, arylalkyl, alkylamino, dialkylamino or taken together are cycloalkyl or bridged cycloalkyl, p is an integer from 1 to 6 and T is a covalent bond, oxygen, sulfur, or nitrogen; or (2)

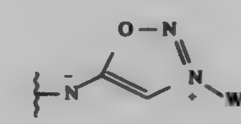

in which W is a heterocyclic ring or NR_hR_i wherein R_h and R_i are independently selected from lower alkyl, aryl or alkenyl;
R_g is selected from

(1)

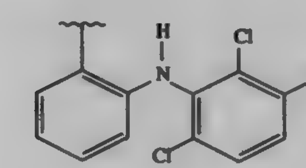

(2)

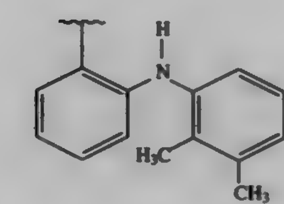

(3)

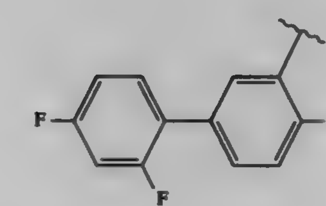

(4)

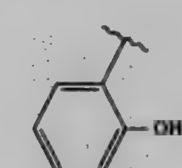

(5)

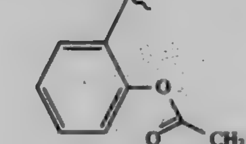

(6)

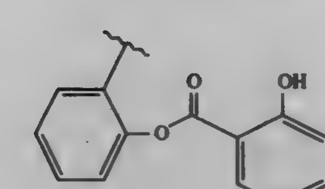

-continued

(7)

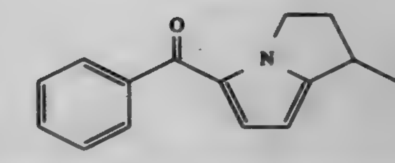

and to which is directly or indirectly linked at least one NO group.

5,703,074
THIOPHENE COMPOUNDS

Michel Wierzbicki, L'Etang La Ville; Frédéric Sauveur, Argenteuil; Marie-Francoise Boussard, Mareil sur Mauldre; Jacqueline Bonnet, Paris, and Massimo Sabatini, Garges, all of France, assignors to Adir Et Compagnie, Courbevoie, France

Filed Dec. 20, 1996, Ser. No. 771,035
Claims priority, application France, Dec. 21, 1995, 95 15224
Int. Cl.[6] C07D *413/06;* **A61K** *31/535*
U.S. Cl. 514—231.5 **4 Claims**

1. A compound selected from:
thiophene compounds of formula I:

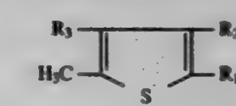

(I)

wherein:
one of R_1, R_2 and R_3 represents:

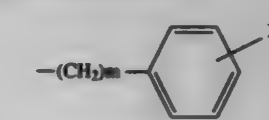

wherein:
m represents an integer of 2 to 6 inclusive and
X is selected from the group consisting of hydrogen, alkyl and alkoxy each having 1 to 5 carbon atoms inclusive in straight or branched chain, and dialkylamino in which each alkyl contains 1 to 5 carbon atoms inclusive,
one of R_1, R_2 and R_3 represents:

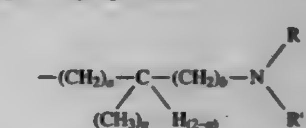

wherein:
n is selected from the group consisting of 0, 1 and 2;
a is selected from the group consisting of 2 and 3 and
b is selected form the group consisting of 1 and 2, such that a+b=4, and
R and R', which are identical or different, are each selected from the group consisting of hydrogen and alkyl having 1 to 5 carbon atoms inclusive in straight or branched chain, or
R and R' form, together with the nitrogen to which they are bonded, a five-membered or six-membered heterocyclic group optionally containing an oxygen or a second nitrogen, which nitrogen may itself be substituted by alkyl containing 1 to 5 carbon atoms inclusive in straight or branched chain or by arylalkyl in which the alkyl group contains 1 to 5 carbon atoms and the aryl group is optionally mono- or poly-substituted by halogen or by alkyl, or alkoxy each having 1 to 5 carbon atoms inclusive, and
one of R_1, R_2 and R_3 represents hydrogen or methyl, and the physiologically-tolerable salts thereof with an acid.

5,703,075

ANTIATHEROSCLEROTIC AND ANTITHROMBOTIC 1-BENZOPYRAN-4-ONES AND 2-AMINO-1,3-BENZOXAZINE-4-ONES

Ronald B. Gammill; Thomas M. Judge, and Joel Morris, all of Kalamazoo, Mich., assignors to Pharmacia & Upjohn Company, Kalamazoo, Mich.

Continuation of Ser. No. 292,316, Aug. 19, 1994, abandoned, which is a continuation of Ser. No. 106,965, Aug. 16, 1993, abandoned, which is a continuation of Ser. No. 718,391, Jun. 19, 1991, abandoned, which is a continuation-in-part of Ser. No. 541,126, Jun. 20, 1990, abandoned, which is a continuation-in-part of Ser. No. 287,796, Dec. 21, 1988, abandoned. This application Jun. 7, 1995, Ser. No. 484,584

Int. Cl.⁶ A61K *31/535;31/54;* **C07D** *413/04;413/14*

U.S. Cl. 514—233.5 **12 Claims**

1. A compound of Formula I

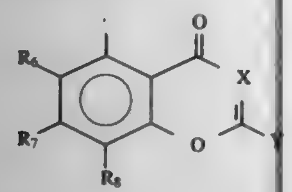

wherein X is CZ where Z is H, C_1–C_5 alkyl, amino (-NH_2) or a halogen atom;

Y is -$(CH_2)_n$-(4-morpholine) optionally substituted with one or two members selected from the group consisting of C_1–C_4 alkyl, C_1–C_4 alkoxy, halo or trifluoromethyl;

R_5, R_6, R_7 and R_8, being the same or different, are selected from the group consisting of hydrogen, C_1–C_8 alkyl, -$(CH_2)_n$phenyl, -$(CH_2)_n$naphthyl, -$(CH_2)_n$pyridinyl, -$(CH_2)_q NR_9R_{10}$, -CH=CH-phenyl, -CH_2-CH=CH_2, -CH=CH-CH_3, -CH=CH_2, -O-CH_2-CH=CH_2, -C≡C-phenyl, -O$(CH_2)_p$(N-methylpiperdin-3-yl), -O-$(CH_2)_p NR_9R_{10}$, -O-$(CH_2)_p$ -4-(C_1–C_4 alkyl)-1-piperazine, -O-$(CH_2)_p$(1-piperidinyl), -O-$(CH_2)_p$(1-pyrrolidinyl), -O-$(CH_2)_2$ -4-methyl-1-piperazine, -O-$CH_2CH(OCH_3)_2$, -O-$(CH_2)_p OR_{15}$, -O-$(CH_2)_p$-O-$(CH_2)_p$-OR_{15}, -O-$(CH_2)_p$-S-R_{15}, -O-$(CH_2)_p$-O-$(CH_2)_p NR_9R_{10}$, -O-$(CH_2)_p$-S-$(CH_2)_p NR_9R_{10}$, -O-$(CH_2)_p$-S-$(CH_2)_p$-OR_{15}, -O-$(CH_2)_p$-S(O)-R_{15}, -O-$(CH_2)_p$-S(O_2)-R_{15}, -O-$(CH_2)_p$-S(O)-$(CH_2)_p NR_9R_{10}$-O-$(CH_2)_p$-S(O)-$(CH_2)_p$-OR_{15}, -O-$(CH_2)_p$-S(O_2)-$(CH_2)_p NR_9R_{10}$-O-$(CH_2)_p$-S(O_2)-$(CH_2)_p$-OR_{15}, -O-$(CH_2)_p$-[4-[$(CH_2)_p OR_{15}$]-1-piperazine], -O-$(CH_2)_p$-[4-(CH)(phenyl)$_2$-1-piperazine], -O-$(CH_2)_p$-[4-$(CH_2)_q$phenyl-1-piperazine], -O-$(CH_2)_p$-[4-$(CH_2)_q$pyridinyl-1-piperazine], -O-$(CH_2)_p$-[4-(NR_9R_{10} substituted pyridinyl)-1-piperazine], -O-$(CH_2)_p$-(OH substituted 1-piperidine, -O-$(CH_2)_p$-1-pyrrolidin-2-one, -$(CH_2)_n$C(O)-$(CH_2)_n R_9$, -$(CH_2)_n$C(O)O-$(CH_2)_p R_9$, -$(CH_n$C(O)O-$(CH_2)_p NR_9R_{10}$, -$(CH_2)_n$C(O)$(CH_2)_n NR_9R_{10}$, NO_2, -O-$(CH_2)_n$C(O)-$(CH_2)_p R_9$, -O-$(CH_2)_n$C(O)O-$(CH_2)_p R_9$, -O-$(CH_2)_n$ C(O)-$(CH_2)_n NR_9R_{10}$-NR_9R_{10}-N(R_9)$(CH_2)_n$C(O)-$(CH_2)_n R_{10}$-N(R_9)-$(CH_2)_n$ C(O)O-$(CH_2)_n R_{10}$N(R_9)$(CH_2)_n$C(O)-$(CH_2)_n NR_9R_{10}$-O-$(CH_2)_n$phenyl, O-$(CH_2)_n$pyridine, -O$(CH_2)_n$C(O)-$(CH_2)_n$pyridine, -O-$(CH_2)_n$C(O)O-$(CH_2)_n$pyridine, -O$(CH_2)_n$C(O)-N(R_9)$(CH_2)_n$pyridine, -O-$(CH_2)_n$quinoxalinyl, -O-$(CH_2)_n$quinolinyl, -O-$(CH_2)_n$pyrazinyl, -O-$(CH_2)_n$naphthyl, -O-$(CH_2)_n$C(O)-$(CH_2)_n$naphthyl, -O-$(CH_2)_n$C(O)O-$(CH_2)_n$naphthyl, -O-$(CH_2)_n$C(O)NR_9-$(CH_2)_n$naphthyl, halo (fluoro, chloro, bromo, iodo), OH, -$(CH_2)_q$ -OH, -$(CH_2)_q$OC(O)R_9, -$(CH_2)_q$OC(O)-NR_9R_{10}-(1-cyclohexyl-1H-tetrazol-5-yl)C_1–C_4 alkoxy, [1-(C_1–C_5alkyl)-1H-tetrazol-5-yl]-C_1–C_4 alkoxy, [1-(phenyl)-1H-tetrazol-5-yl]C_1–C_4 alkoxy, -[1-(pyridinyl)-1H-tetrazol-5-yl]C_1–C_4 alkoxy, -[1-(1-phenylethyl)-1H-tetrazol-5-yl]C_1–C_4 alkoxyl, -C_1–C_4 alkoxyl, a group of Formula II

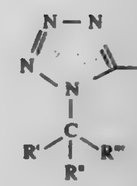

wherein R' is methyl or carboxy, R" is hydrogen and R''' is selected from benzyl, C_1–C_5 alkyl, -$(CH_2)_n CO_2H$, -CH_2SH, -CH_2SCH_3, imidazolinylmethylene, indolinylmethylene, CH_3CH(OH), CH_2OH, $H_2N(CH_2)_4$-(optionally in protected form) or H_2NC(NH)NH$(CH_2)_3$ (optionally in protected form); with the proviso that when Y is 4-morpholinyl, the compound is other than:

6,7-dimethoxy-2-(4-morpholinyl)-4H-1-benzopyran-4-one,

7,8-(Bis)-(3-trifluoromethyl)phenylmethoxy-2-(4-morpholinyl)-4H-1-benzopyran-4-one,

N-cyclohexyl -2-[[8-methyl -2-(4-morpholinyl)-4-oxo-4H-1-benzopyran-7-yl]oxy]-acetamide,

2-[[8-methyl-2-(4-morpholinyl)-4-oxo-4H-1-benzopyran-7-yl]oxy] -N-phenyl-acetamide,

6-[(1-cyclohexyl -1H-tetrazol -5-yl)methoxy]-2-(4-morpholinyl)-4H-1-Benzopyran-4-one,

2-[[8-methyl -2-(4-morpholinyl)-4-oxo-4H-1-benzopyran-7-yl]oxy]-N-(1-phenylethyl)-acetamide;

R_9 and R_{10},being the same or different, are selected from the group consisting of (a) hydrogen, with the provisio that R_9 and R_{10} are not both hydrogen; (b) C_1–C_{12} alkyl; (c) phenyl optionally substituted with one, 2 or 3 C_1–C_4 alkyl, C_1–C_4 alkoxy, halo, OH, trifluoromethyl or -CO_2(C_1–C_4alkyl); (d)-$(CH_2)_n$phenyl, (e)-$(CH_2)_n$pyridinyl or (f) wherein R_9 and R_{10}, taken together with N, form a saturated or unsaturated heterocyclic amine ring selected from the group consisting of

(aa) 4-morpholine optionally substituted with one or two members selected from the group consisting of C_1–C_4 alkyl, C_1–C_4 alkoxy, halo or trifluoromethyl,

(bb) 4-thiomorpholine optionally substituted with one or two members selected from the group consisting of C_1–C_4 alkyl, C_1–C_4 alkoxy, halo or trifluoromethyl,

(cc) 3-amino-1-pyrrolidine,

(dd) 1-pyrrolidine optionally substituted with one or two members selected from the group consisting of C_1–C_4 alkyl, C_1–C_4 alkoxy, halo, OH, -CH_2OH, or trifluoromethyl,

(ee) 1-piperidine optionally substituted with one or two members selected from the group consisting of C_1–C_4 alkyl, C_1–C_4 alkoxy, halo, trifluoromethyl, -$(CH_2)_q$OH, -CO_2H, -CO_2CH_3, -$CO_2CH_2CH_3$ or phenyl (wherein phenyl is optionally substituted with one, 2 or 3 C_1–C_4 alkyl, C_1–C_4 alkoxy, halo or trifluoromethyl),

(ff) 1-piperazine, 4-(C_1–C_4alkyl)-1-piperazine, 4-phenyl-1-piperazine (wherein phenyl is optionally substituted with one, 2 or 3 C_1–C_4 alkyl, C_1–C_4 alkoxy, halo or trifluoromethyl) or 4-pyridinyl-1-piperazine optionally substituted with one or two members selected from the group consisting of C_1–C_4 alkyl, C_1–C_4 alkoxy, halo, trifluoromethyl, -CH_2OH, -CO_2H, -CO_2CH_3 or -$CO_2CH_2CH_3$, and

(gg) thiazolidine, thiazolidine-4-carboxylic acid, pipecolinic acid, p-piperazinacetophenone, 1-homopiperazine, 1-methylhomopiperazine, 4-phenyl-1,2-3,6-tetrahydropyridine, proline, tetrahydrofurylamine, 1-(3-hydroxy)pyrrolidine, nipecotamide, 1,2,3,4-tetrahydroisoquinoline or imidazole;

R_{15} is selected from H, C_1–C_5 alkyl, -$(CH_2)_n$phenyl, -$(CH_2)_n$pyridin-1-yl, -$(CH_2)_n$pyridin-2-yl, -$(CH_2)_n$pyridin-3-yl, -$(CH_2)_n$pyridin-4-yl, -$CH_2)_n$-1-(C_1–C_4alkyl)-1H-5-tetrazole, -$(CH_2)_n$-pyrimidine, -$(CH_2)_n$-2-benzoxazole, -$(CH_2)_n$-2-benzothiazole, -$(CH_2)_n$ -(C_1–C_4alkyl)-triazole, -$(CH_2)_n$-(C_1–C_4alkyl)-imidazole;

n is 0–5;

p is 2–5;

q is 1–5;

and pharmaceutically acceptable salts and hydrates thereof; and with the overall proviso that when R_5, R_6 and R_8 are selected from:

H, C_1–C_8 alkyl, or halogen and Z is H or C_1–C_5 alkyl, or halogen, then R_7 is other than -OH, -OCH_3, -($(CH_2)_n$C(O)O-$(CH_2)_p R_9$ or -O-$(CH_2)_n$C(O)-NR_9R_{10} wherein n is other than 0, and R_9 and R_{10} are selected from H or C_1–C_{12} alkyl.

5,703,076

RETROVIRAL PROTEASE INHIBITORS

John J. Talley; Daniel P. Getman, both of Chesterfield; Ko-Chung Lin, St. Louis; Gary A. DeCrescenzo, St. Peters; Donald J. Rogier, Jr., St. Louis, and John N. Freskos, Clayton, all of Mo., assignors to G. D. Searle & Co., Skokie, Ill.

Division of Ser. No. 148,817, Nov. 8, 1993, Pat. No. 5,475,027, which is a continuation of Ser. No. 886,547, May 20, 1992, abandoned, which is a continuation-in-part of Ser. No. 789,644, Nov. 14, 1991, abandoned, which is a continuation-in-part of Ser. No. 615,210, Nov. 19, 1990, abandoned. This application May 25, 1995, Ser. No. 449,966

Int. Cl.⁶ C07C *275/18;* **A61K** *31/17*

U.S. Cl. 514—237.5 **35 Claims**

1. A compound represented by the formula:

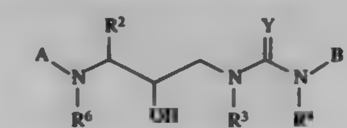

wherein A represents radicals represented by formula:

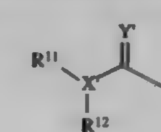

wherein

R^2 represents alkyl, aryl, cycloalkyl, cycloalkylalkyl and aralkyl radicals, which radicals are optionally substituted with a group selected from —OR^9, —SR^9, and halogen radicals,

wherein R^9 represents hydrogen and alkyl radicals;

R^3 represents alkyl, alkenyl, alkynyl, hydoxyalkyl, alkoxyalkyl, cycloalkyl, cycloalkylalkyl, heterocycloalkyl, heteroaryl, heterocycloalkylalkyl, aryl, aralkyl, heteroaralkyl, aminoalkyl and mono- and disubstituted aminoalkyl radicals where said substitutents are selected from alkyl, aryl, aralkyl, cycloalkyl, cycloalkylalkyl, heteroaryl, heteroalkyl, heterocycloalkyl, and heterocycloalkylalkyl radicals;

X' represents O, C(R^{17}) where R^{17} represents hydrogen and alkyl radicals, and N provided that when X' is O, R^{12} is absent;

Y and Y' independents represent O,S and NR^{15} wherein R^{15} represents radicals as defined for R^3;

R^4, R^5, R^{11} and R^{12} independently represent hydrogen and radicals as defined by R^3, or R^4 and R^5, and/or R^{11} and R^{12} together with the nitrogen atom to which they are bonded represent heterocycloalkyl and heteroaryl radicals, or R^{11} and R^{12} together with a carbon atom to which they are attached represent cycloalkyl and aryl radicals;

B represents R^5 and radicals represented by the formula:

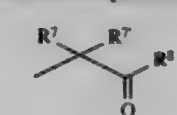

wherein:

R^7 and $R^{7'}$ represent radicals as defined for R^3 and amino acid side chains selected from valine, isoleuceine, glycine, alaninc, allo-isoleucine, asparagine, leucine, glutamine and t-butylglycine;

and R^8 represents an amide derivative of an amino acid; and R^6 represents hydrogen and alkyl radicals.

5,703,077

METHODS FOR USING (2-IMIDAZOLIN-2-YLAMINO) QUINOXALINE DERIVATIVES

James A. Burke, Tustin; Michael E. Garst, Newport Beach, and Larry A. Wheeler, Irvine, all of Calif., assignors to Allergan, Waco, Tex.

Division of Ser. No. 458,949, Jun. 2, 1995, Pat. No. 5,587,376, which is a division of Ser. No. 390,265, Feb. 15, 1995, Pat. No. 5,561,132, which is a continuation of Ser. No. 135,716, Oct. 13, 1993, abandoned. This application Aug. 7, 1996, Ser. No. 693,745

Int. Cl.⁶ A61K *31/495*

U.S. Cl. 514—249 **19 Claims**

1. A method of treating a mammal comprising administering to a mammal an effective amount to provide a desired therapeutic effect in said mammal of a compound selected from the group consisting of those having the formula

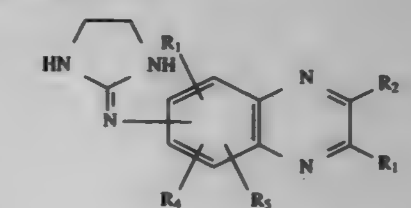

and pharmaceutically acceptable acid addition salts thereof and mixtures thereof, wherein R_1 and R_2 each is selected from the group consisting of H, alkyl radicals containing 1 to 4 carbon atoms and alkoxy radicals containing 1 to 4 carbon atoms provided that R_1 and R_2 are not both H, the 2-imidazolin-2-ylamino group may be in any of the 5-, 6-, 7- or 8- positions of the quinoxaline nucleus, and R_3, R_4 and R_5 each is located in one of the remaining 5-, 6- 7- or 8- positions of the quinoxaline nucleus and is independently selected from the group consisting of Cl, Br, H and alkyl radicals containing 1 to 3 carbon atoms, said desired therapeutic effect being an increase in renal fluid flow.

5,703,078

ANTIPARASITIC MARCFORTINES AND PARAHERQUAMIDES

Byung H. Lee, and Michael F. Clothier, both of Kalamazoo, Mich., assignors to Pharmacia & Upjohn Company, Kalamazoo, Mich.

Filed Jun. 27, 1996, Ser. No. 670,306

Int. Cl.⁶ A61K *31/50;31/495;* **C07D** *241/36*

U.S. Cl. 514—250 **24 Claims**

1. 15-Alkyl-14-hydroxy compounds of formula (III)

(III)

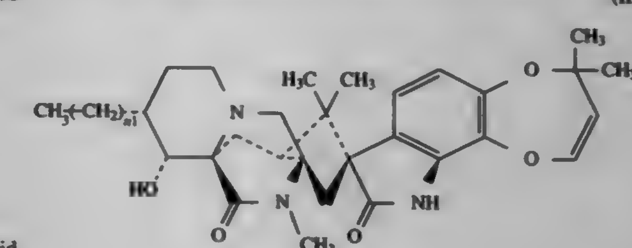

where n_1 is 1 thru 3, the N-oxides and pharmaceutically acceptable salts thereof.

5,703,079

TETRAHYDROFURAN ANTIFUNGALS

Anil K. Saksena, Upper Montclair; Viyyoor M. Girijavallabhan, Parsippany; Raymond G. Lovey, West Caldwell; Russell E. Pike, Stanhope; Haiyan Wang, Dayton; Yi-Tsung Liu, Morris Township; Ashit K. Ganguly, Upper Montclair, and Frank Bennett, Piscataway, all of N.J., assignors to Schering Corporation, Kenilworth, N.J.

Continuation-in-part of Ser. No. 171,083, Dec. 21, 1993, abandoned. This application Jun. 2, 1995, Ser. No. 460,400

Int. Cl.⁶ A61K *31/495;* **C07D** *405/14*

U.S. Cl. 514—252 **9 Claims**

1. A compound represented by the formula I

[I]

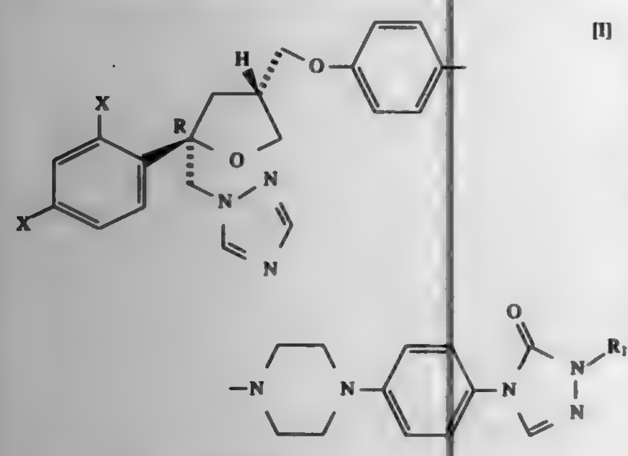

wherein X is independently both F or both Cl or one X is independently F and the other is independently Cl;

R_1 is a straight or branched chain (C_4 to C_5) alkyl group substituted by a hydroxy group or a pharmaceutically acceptable salt thereof.

5,703,080

METHOD FOR STABILIZING DUOCARMYCIN DERIVATIVES

Masashi Nakakura; Yuji Ueno; Eiji Hayakawa, and Tokuyuki Kuroda, all of Shizuoka, Japan, assignors to Kyowa Hakko Kogyo Co., Ltd., Tokyo, Japan

PCT No. PCT/JP95/00962, § 371 Date Oct. 30, 1996, § 102(e) Date Oct. 30, 1996, PCT Pub. No. WO95/31971, PCT Pub. Date Nov. 30, 1995

PCT Filed May 19, 1995, Ser. No. 737,145

Claims priority, application Japan, May 20, 1994, 6-106415

Int. Cl.⁶ A61K *31/495;* **C07D** *241/04*

U.S. Cl. 514—253 **6 Claims**

1. A method for stabilizing a compound, comprising the steps of; selecting a compound represented by formula (I):

(I)

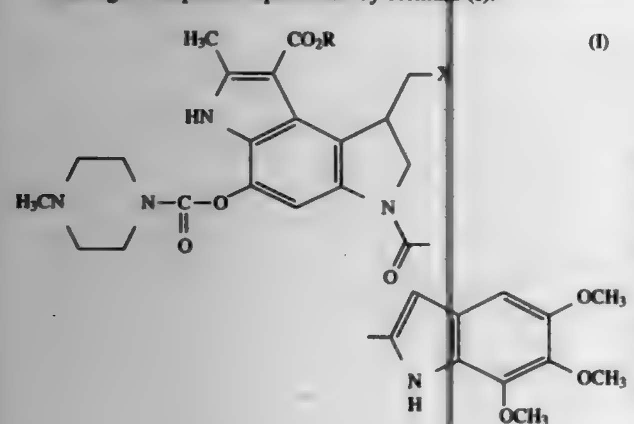

wherein R represents a straight chain or branched alkyl group having 1 to 6 carbon atoms, an allyl group of a benzyl group, and x represents a chlorine atom or a bromine atom; and

preparing a solution of said compound and at least one material selected from the group consisting of a saccharide, an electrolyte, a water-soluble polymer, a polyhydric alcohol and a surfactant.

5,703,081

QUINOLONECARBOXYLIC ACID DERIVATIVES, THEIR PRODUCTION AND USE

Akio Miyake, Hirakata; Masahiro Nakamura, Kashiba-cho, and Hideto Fukushi, Osaka, all of Japan, assignors to Takeda Chemical Industries, Ltd., Osaka, Japan

Division of Ser. No. 207,091, Mar. 8, 1994, Pat. No. 5,519,024. This application Feb. 29, 1996, Ser. No. 608,697

Claims priority, application Japan, Mar. 9, 1993, 5-047917

Int. Cl.⁶ A61K *31/495;31/47;* **C07D** *401/02;215/56*

U.S. Cl. 514—254 **8 Claims**

1. A compound of the formula:

(V)

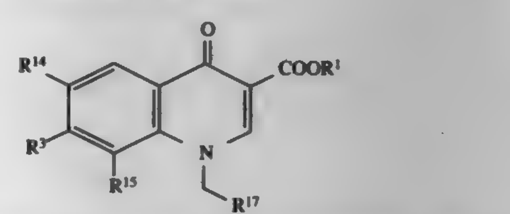

wherein R^1 is hydrogen or a carboxy protecting group; R^3 is 4-(4-pyridyl)piperazin-1-yl group; 4-(4-piperidinyl)piperidin-1-yl group; or a group represented by the formula:

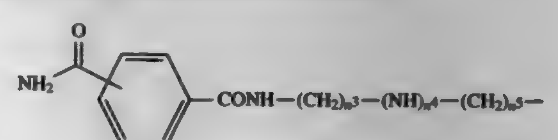

wherein n^3 is an integer of 1 to 4; n^4 is 0 or 1; and n^5 is a whole number 0 to 3; R^{14} and R^{15} are hydrogen or halogen; R^{17} is an optionally substituted phenyl group; or a salt thereof.

5,703,082

ENANTIOMERS OF 1-[(4-CHLOROPHENYL)PHENYLMETHYL]-[(4-METHYLPHENYL)SULFONYL]PIPERAZINE

Eric Cossement, Brussels; Guy Bodson, Bellefontaine, and Jean Gobert, Brussels, all of Belgium, assignors to U C B S.A., Brussels, Belgium

Division of Ser. No. 207,096, Mar. 8, 1994, Pat. No. 5,478,941. This application Jun. 5, 1995, Ser. No. 460,844

Claims priority, application United Kingdom, Mar. 15, 1993, 9305282

Int. Cl.⁶ C07D *241/04;* **A61K** *31/495*

U.S. Cl. 514—255 **1 Claim**

1. A method for achieving a tranquilizing or anxiolytic effect in a patient in need thereof, which comprises administering to said patient an effective amount of the dextrorotatory dihydrochloride of 2-[2-[4-[(4-chlorophenyl)phenylmethyl]-1-piperazinyl]ethoxy]ethanol.

5,703,083

N-AMINOALKYL-1-BIPHENYLENYL-2-CARBOXAMIDES; NEW DOPAMINE RECEPTOR SUBTYPE SPECIFIC LIGANDS

Xi Chen, New Haven, and Jun Yuan, Clinton, both of Conn., assignors to Neurogen Corporation, Brandford, Conn.

Filed Apr. 15, 1996, Ser. No. 631,152

Int. Cl.⁶ A61K *31/495*

U.S. Cl. 514—255 **23 Claims**

1. A compound of the formula:

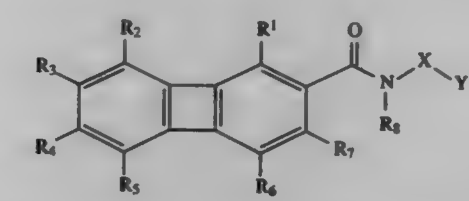

or the pharmaceutically acceptable acid addition salts thereof wherein:

R_1, R_2, R_3, R_4, R_5, R_6, and R_7 are the same or different and represent hydrogen, halogen, hydroxy, amino, aminosulfonyl, alkylaminosulfonyl, dialkylaminosulfonyl, cyano, nitro, trifluoromethyl, trifluoromethoxy, alkyl or alkoxy;

R_8 is hydrogen or lower alkyl;

X represents an alkylene group of 2 to 6 carbon atoms optionally substituted with one or more alkyl groups having from 1 to 4 carbon atoms;

Y represents a group of the formula:

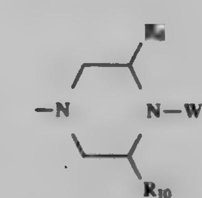

where

R_9 and R_{10} independently represent alkyl; and

W is

phenyl or 1- or 2-naphthyl each of which is optionally substituted with up to five substituents independently selected from hydrogen, halogen, alkyl, alkoxy, thioalkoxy, hydroxy, amino, alkylamino or dialkylamino;

1-(1,2,3,4-tetrahydro)napthyl or 1-(1,2-dihydro)indenyl;

2-, 3-, or 4-pyddinyl;

2-, 4-, or 5-pyrimidinyl optionally substituted with halogen;

1-, 3-, or 8-isoquinolinyl;

7-benzofuranyl; or

7-benzothienyl.

5,703,084

ADENOSINE DEAMINASE INHIBITORS

Elie Abushanab, Peacedale, R.I., and Palle V. P. Pragnacharyulu, Bridgton, Mo., assignors to The Board of Governors for Higher Education, State of Rhode Island and Providence Plantations, Providence, R.I.

Filed Jul. 15, 1996, Ser. No. 680,413

Int. Cl.⁶ A61K *31/52;* **C07D** *473/18*

U.S. Cl. 514—261 **12 Claims**

1. A compound of:

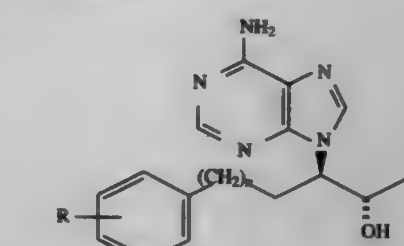

where n=0-4 and R is selected from the group consisting of 4—CH_3; 3—CH_2CH_3; 2—$CH_2CH_2CH_3$; H; 3—CH_3; 2—CH_2CH_3; [H] 2—CH_3.

5,703,085

XANTHINE DERIVATIVES

Fumio Suzuki, Mishima; Nobuaki Koike, Shizuoka; Junichi Shimada, Shizuoka; Joji Nakamura, Shizuoka; Shizuo Shiozaki, Fuji; Shigeto Kitamura, Machida; Shunji Ichikawa, Shizuoka; Hiroshi Kase, Koganei, and Hiromi Nonaka, Shizuoka, all of Japan, assignors to Kyowa Hakko Kogyo Co., Ltd., Tokyo, Japan

PCT No. PCT/JP95/00267, § 371 Date Oct. 20, 1995, § 102(e) Date Oct. 20, 1995, PCT Pub. No. WO95/23148, PCT Pub. Date Aug. 31, 1995

PCT Filed Feb. 23, 1995, Ser. No. 537,770

Claims priority, application Japan, Feb. 23, 1994, 6-025736

Int. Cl.⁶ A61K *31/52;* **C07D** *473/12;473/06;473/10*

U.S. Cl. 514—263 **12 Claims**

1. A xanthine derivative represented by Formula (I) or its pharmaceutically acceptable salt:

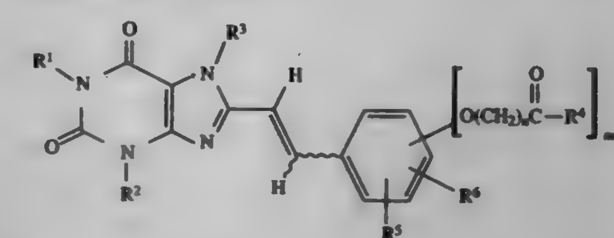

wherein R^1 and R^2 independently represent lower alkyl, lower alkenyl, or lower alkynyl; R^3 represents hydrogen, lower alkyl, lower alkenyl, or lower alkynyl; R^4 represents lower alkyl, or aryl which is optionally substituted with 1 to 4 substituents independently selected from the group consisting of lower alkyl, hydroxy, lower alkoxy, halogen, nitro, amino, lower alkylamino, di-lower alkylamino, benzyloxy, phenyl and phenoxy, wherein said lower alkyl substituent and lower alkoxy substituent are each optionally substituted with 1 to 3 substituents independently selected from the group consisting of halogen, nitro, lower alkoxy and amino; R^5 and

R^6 independently represent hydrogen, lower alkyl, or lower alkoxy, or R^5 and R^6 are combined together to represent —O—$(CH_2)_p$—O— (where p is an integer of 1 to 3); n represents 0, 1 or 4; and m represents 1 or 2, with the proviso that R^1 and R^2 are not methyl.

5,703,086

COMPOUNDS AND METHODS OF USE TO DERIVATIZE NEIGHBORING LYSINE RESIDUES IN PROTEINS UNDER PHYSIOLOGICAL CONDITIONS

Michael I. Bukrinsky, Glenwood Landing; Anthony Cerami, Shelter Island, both of N.Y., and Peter Ulrich, Old Tappan, N.J., assignors to The Picower Institute for Medical Research, Manhasset, N.Y.

Division of Ser. No. 463,405, Jun. 5, 1995, which is a continuation-in-part of Ser. No. 369,830, Jan. 6, 1995, Pat. No. 5,574,040. This application Jun. 6, 1995, Ser. No. 471,797

Int. Cl.^{6} A61K *31/505;* **C07D** *239/48*

U.S. Cl. 514—275 **6 Claims**

1. A pharmaceutical composition comprising a compound according to the formula:

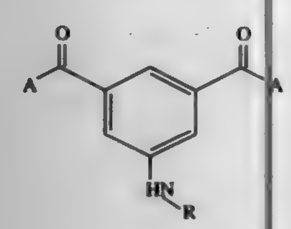

wherein A=CH_3 or CH_2CH_3 and

(1)

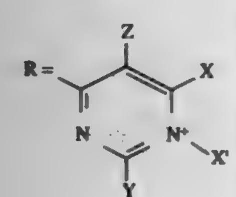

(2)

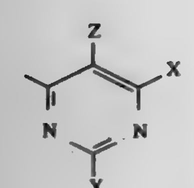

wherein X=NH_2, CH_3 or CH_2CH_3; X'=CH_3 or CH_2CH_3; Y=NH_2, $NHCH_3$, $N(CH_3)_2$; and Z=H, CH_3 or CH_2CH_3; or

(3)

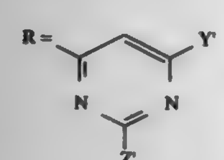

wherein Y' and Z', independently,=H, NH_2, $NHCH_3$, $N(CH_3)_2$ or $N^+(CH_3)_3$ or a salt thereof; a therapeutically effective amount of AZT; and a pharmaceutically acceptable carrier.

5,703,087

PHENYL INDOLE COMPOUNDS

Jens Kristian Perregaard, Jeagerspris; Ejner Knud Moltzen, Gentofte; Kim Andersen, Rodovre; Henrik Pedersen, Broenshoej; Klaus Peter Bøgesø, Hørsholm, all of Denmark; Andre Pernet, Bannockburn, Ill.; Barbara Bopp, Lake Bluff, Ill.; Darcy Mulford, Lindenhurst, Ill., and Kiyoshi Sakamoto, Sanda, Japan, assignors to H. Lundbeck A/S, Copenhagen-Valby, Denmark

PCT No. PCT/DK94/00407, § 371 Date Nov. 27, 1996, § 102(e) Date Nov. 27, 1996, PCT Pub. No. WO95/12591, PCT Pub. Date May 11, 1995

PCT Filed Oct. 28, 1994, Ser. No. 635,905

Claims priority, application Denmark, Nov. 1, 1993, 1234/93

Int. Cl.^{6} A61K *31/445;* **C07D** *401/14*

U.S. Cl. 514—278 **6 Claims**

1. A phenylindole compound having formula

(I)

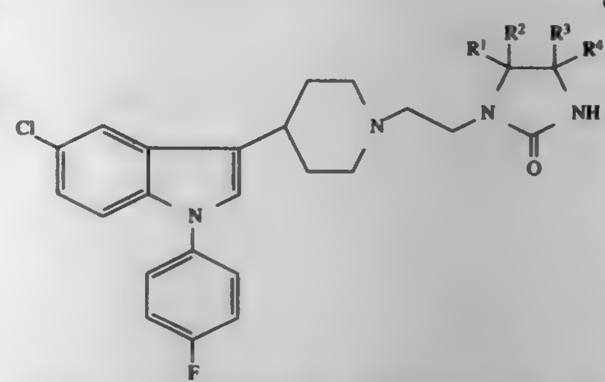

wherein R^1-R^4 are independently selected from the group consisting of hydrogen, deuterium, halogen, C_{1-6} alkyl, cycloalkyl, cycloalkyl-C_{1-6} alkyl, aryl-C_{1-6} alkyl, aryl, hydroxy, C_{1-6} alkoxy, cycloalkyloxy, cycloalkyl-C_{1-6} alkyloxy, aryl-C_{1-6} alkyloxy, aryloxy, C_{1-6} alkylthio, cycloalkylthio, cycloalkyl-C_{1-6} alkylthio, aryl-C_{1-6} alkylthio and arylthio, with the proviso that all 4 substituents cannot be hydrogen; or

at least one pair of substituents (R^1, R^2 or R^3, R^4) constitutes an oxo group or a thioxo group and, if only one oxo or thioxo group is present, the other two substituents are selected from the above group defined for R^1-R^4, with the proviso that they may not both be hydrogen; or

R^1 and R^2 and/or R^3 and R^4, respectively, can be joined together to form a 3–8 membered spiro ring optionally containing one oxygen or sulfur atom in the ring; or acid addition salt thereof.

5,703,088

TOPICAL APPLICATION OF SPIPERONE OR DERIVATIVES THEREOF FOR TREATMENT OF PATHOLOGICAL CONDITIONS ASSOCIATED WITH IMMUNE RESPONSES

Richard J. Sharpe, Newtonville; Kenneth A. Arndt, Newton Centre; Stephen J. Galli, Winchester; Peter C. Meltzer, Lexington; Raj K. Razdan, Belmont, and Howard P. Sard, Arlington, all of Mass., assignors to Beth Israel Deaconess Medical Center, Inc., Boston, Mass.

Continuation-in-part of Ser. No. 831,429, Feb. 5, 1992, Pat. No. 5,244,902, and a continuation-in-part of Ser. No. 494,744, Mar. 16, 1990, abandoned, which is a continuation-in-part of Ser. No. 396,523, Aug. 21, 1989, abandoned. This application Jun. 4, 1992, Ser. No. 893,536

Int. Cl.^{6} A61K *31/44*

U.S. Cl. 514—278 **20 Claims**

1. A method for the treatment of a cutaneous, ocular, or mucosal pathology associated with an immune response in a human or other

mammal comprises topical application of an effective amount of a compound selected from the group consisting of a quaternary salt of spiperone and a quaternary salt of a spiperone derivative of the formula:

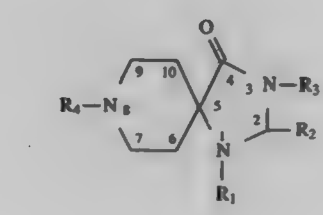

wherein

R_1=H; alkyl, Y—$CH_2(CH_2)_n$— or Ar_1,

R_2=H or C_1 to C_{20} alkyl;

R_3=H; alkyl, $CN(CH_2)_2$—; X—$(CH_2)_n$—; X—$(CH_2)_nCO$—; $NH_2C(NH)NHC(NH)(aryl)(CH_2)_n$—; or X-(aryl)-$(CH_2)_n$—;

R_4=H, $C_6H_5CH(CH_2CH_3)CH_2$—, $C_6H_5CH(CH_3)(CH_2)_2$—, $C_6H_5CH_2CH(CH_3)CH_2$—, $C_6H_5CH_2CH_2CH(CH_3)$—, $C_6H_5CH(CH_3)(CH_2)_3$—, (2, 3, or 4)-(alkyl)-$C_6H_4CH(CH_3)(CH_2)_3$—, (2, 3, or 4)-(alkyloxy)-$C_6H_4CH(CH_3)(CH_2)_3$, $C_6H_5CH(OCH_3)(CH_2)_2$—,

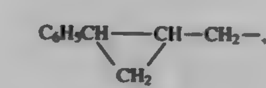

$C_6H_5CO(CH_2)_3$, $C_6H_5CO(CH_2)_4$—, (2, 3, or 4)-(alkyl)-$C_6H_4CO(CH_2)_3$—, (2, 3, or 4)-(alkyl-oxy)-$C_6H_4CO(CH_2)_3$—, (2, 3, or 4)-X—C_6H_4-alkyl-, (2, 3, or 4)-X—$C_6H_4CO(CH_2)_n$—, 2-thienyl-CO-$(CH_2)_3$—,

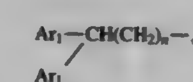

(2, 3, or 4)-X—$C_6H_4C(CH_3)CH(CH_2)_2$—, where the conformation about the double bond is cis or trans,

(2, 3, or 4)-X—$C_6H_4C(CH_3)CHCH_2$—, where the conformation about the double bond is cis or trans,

(2, 3, or 4)-X—C_6H_4COCH=$CHCH_2$—, Y—$CH_2(CH_2)_n$—, Ar_1—$(CH_2)_n$—, C_1 to C_{20} alkyl, X—$(CH_2)_nCO$—, or X—$(CH_2)_n$—;

n=1 to 6;

p is 1 to 20;

X=is independently F, Cl, Br, I, OCH_3, SO_3^-, NH_2, H, —OH, —COOH, —COOR, wherein R is alkyl or benzyl, —SO_3H, —CN, —$NHSO_3H$, —NO_2, or —SO_2NH_2;

Y=H, F, Cl, Br, I, —SO_3, —$PO_4^=$, —OH, —SH, —SCH_3, —$CH_3SO_2^-$, —NH_2, or —CO_2^-; and

Ar_1 is, independently, aryl, (2, 3, or 4-X—C_6H_4—), (2, 3, or 4)-$(CH_2X)C_6H_4$—, (2, 3, or 4)-$(CX_3)C_6H_4$—, (2, 3, or 4)-$(CHX_2)C_6H_4$—, 2-thienyl, or (2, 3, or 4)-X—$C_6H_4CH_2$—;

or its pharmaceutically acceptable salt optionally in a pharmaceutical carrier.

5,703,089

DIHYDRODIBENZISOQUINOLINEDIONES

Miguel Fernandez Braña; José Maria Castellano Berlanga, both of Madrid, Spain, and Cynthia Romerdahl, Wayland, Mass., assignors to Knoll Aktiengesellschaft, Rheinland Pfalz, Germany

Continuation of Ser. No. 332,382, Oct. 31, 1994, abandoned, which is a continuation-in-part of Ser. No. 233,998, Apr. 28, 1994, abandoned. This application Aug. 19, 1996, Ser. No. 699,205

Int. Cl.^{6} A61K *31/47*

U.S. Cl. 514—284 **5 Claims**

1. A compound of the formula,

I

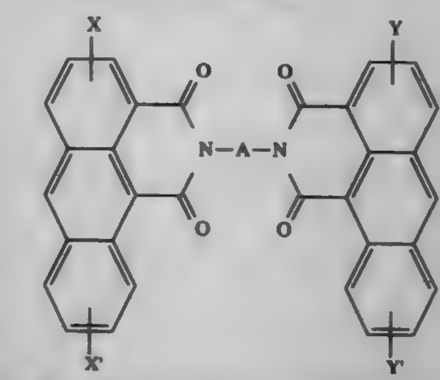

wherein X, X', Y and Y' are identical or different and are each H, NO_2, NH_2, C_1–C_6-alkylamino, di-C_1–C_6-alkylamino, NH—C_1–C_6-acyl, OH, C_1–C_6-alkoxy, halogen, trihalomethyl, C_1–C_6-alkyl, formyl, C_1–C_6-alkylcarbonyl, ureyl, C_1–C_6-alkylureyl, and A is a C_4–C_{12}-bridge which is interrupted at one, two or three points by a secondary or tertiary amino group, where two nitrogen atoms separated by 4 or fewer carbon atoms may additionally be bonded to one another by a C_{1-2}-alkylene group, or a salt thereof with a physiologically tolerated acid.

5,703,090

TRICYCLIC COMPOUNDS USEFUL FOR INHIBITION OF G-PROTEIN FUNCTION AND FOR TREATMENT OF PROLIFERATIVE DISEASES

Adriano Afonso, West Caldwell; Joseph M. Kelly, Parlin, and Ronald L. Wolin, Westfield, all of N.J., assignors to Schering Corporation, Kenilworth, N.J.

Continuation of Ser. No. 443,617, May 18, 1995, abandoned, which is a continuation of Ser. No. 410,442, Mar. 24, 1995. This application Sep. 11, 1996, Ser. No. 714,023

Int. Cl.^{6} A61K *31/44;* **C07D** *471/04;401/04;221/06*

U.S. Cl. 514—290 **8 Claims**

1. A method for inhibiting farnesyl protein transferase in humans in need of such treatment comprising administering an effective amount of a compound of formula (Ib)

(Ib)

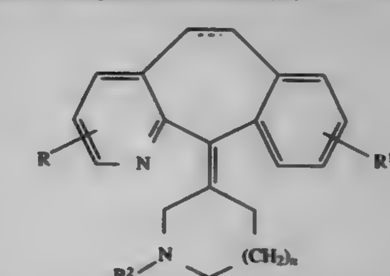

wherein:

R and R^1 are independently selected from H, $(C_1$–$C_6)$alkyl, halogeno, OH, $(C_1$–$C_6)$alkoxy, NH_2, $(C_1$–$C_6)$alkylamino, di$((C_1$–$C_6)$alkyl)amino, CF_3, SO_3H, CO_2R^3, NO_2, SO_2NH_2, and $CONHR^4$;

R^2 is R^5SO_2— wherein R^5 is a heterolaryl group selected from: thienyl or furanyl, and wherein said thienyl or furanyl option-

ally substituted by 1 to 3 substituents selected from: halogeno, $(C_1–C_6)$alkyl, $(C_1–C_6)$alkoxy, amino, alkylamino, dialkylamino, $C_6H_5C(O)NHCH_2$— or —$COOR^8$ wherein $R^8$is H or $(C_1–C_6)$alkyl;

R^3 is $(C_1–C_6)$alkyl or aryl;

R^4 is $(C_1–C_6)$alkyl;

n is 0 or 1; and

the dotted line represents an optional double bond;

and pharmaceutically acceptable salts thereof.

2. A compound selected from a compound of formula (Ib)

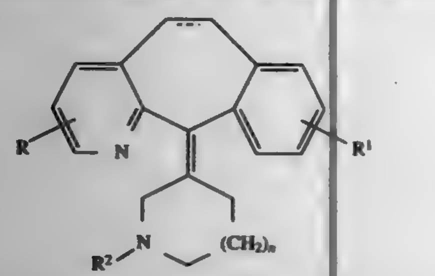

(Ib)

wherein:

R and R^1 are independently selected from H, $(C_1–C_6)$alkyl, halogeno, OH, $(C_1–C_6)$alkoxy, NH_2, $(C_1–C_6)$alkylamino, di($(C_1–C_6)$alkyl)amino, CF_3, SO_3H, CO_2R^3, NO_2, SO_2NH_2, and $CONHR^4$;

R^2 is R^5SO_2— wherein R^5 is a heteroaryl group selected from: thienyl or furanyl, and wherein said thienyl or furanyl is optionally substituted by 1 to 3 substituents selected from: halogeno, $(C_1–C_6)$alkyl, $(C_1–C_6)$alkoxy, amino, alkylamino, dialkylamino, $C_6H_5C(O)NHCH_2$— or $COOR^8$ wherein R^8 is H or $(C_1–C_6)$alkyl;

R^3 is $(C_1–C_6)$alkyl or aryl;

R^4 is $(C_1–C_6)$alkyl;

n is 0 or 1; and

the dotted line represents an optional double bond;

and pharmaceutically acceptable salts thereof.

5,703,091

N-SUBSTITUTED AZABICYCLOALKANE DERIVATIVES, THEIR PREPARATION AND USE

Gerd Steiner, Kirchheim; Rainer Munschauer, Neustadt; Liliane Unger, Ludwigshafen; Hans-Jürgen Teschendorf, Dudenhofen, and Thomas Höger, Edingen-Neckarhausen, all of Germany, assignors to BASF Aktiengesellschaft, Ludwigshafen, Germany

PCT No. PCT/EP94/03913, § 371 Date Jun. 6, 1996, § 102(e) Date Jun. 6, 1996, PCT Pub. No. WO95/15327, PCT Pub. Date Jun. 8, 1995

PCT Filed Nov. 26, 1994, Ser. No. 656,240

Claims priority, application Germany, Dec. 4, 1993, 43 41 403.6

Int. Cl.[6] A61K *31/39*

U.S. Cl. 514—300 3 Claims

1. An N-substituted 3-azabicycloalkane derivative of the formula I

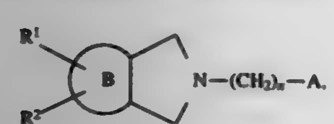

I

where

B is a 3-, 5- or 6-membered ring which can contain 1 nitrogen atom and/or 1 oxygen atom and possibly one double bond,

R^1 is a phenyl group which is unsubstituted or mono- or disubstituted by halogen atoms or $C_1–C_4$-alkyl, trifluoromethyl, hydroxyl, $C_1–C_4$-alkoxy, amino, monomethylamino, dimethylamino, cyano or nitro groups,

R^2 is a hydrogen atom or a $C_1–C_4$-alkyl radical,

n is the number 2, 3 or 4,

A is a hydrogen atom or one of the radicals

—CO—R^5 or —NR^6—CO—R^7,

R^5 is a phenyl group which is unsubstituted or mono- or disubstituted by fluorine, chlorine, bromine or a hydroxyl, nitro, amino, C_{1-4}-alkanoylamino, C_{1-4}-alkylamino, $C_1–C_4$-alkyl or methoxy group or a naphthyl group which is unsubstituted or substituted by fluorine or chlorine,

R^6 is a hydrogen atom or a methyl group, and

R^7 is a phenyl group which is mono- or disubstituted by fluorine, chlorine, bromine, $C_1–C_4$-alkyl, hydroxyl or methoxy or monosubstituted by nitro, cyano, trifluoromethyl, amino, $C_1–C_4$-alkylamino or di-$C_1–C_4$-alkylamino or a thienyl, naphthyl, benzothienyl or indenyl group which is unsubstituted or substituted by fluorine, chlorine or nitro,

and their salts with physiologically tolerable acids.

3. A method of treating nervous disorders in a patient in need thereof which comprises: administering to the patient an effective amount of a compound of the formula I as defined in claim 1.

5,703,092

HYDROXAMIC ACID COMPOUNDS AS METALLOPROTEASE AND TNF INHIBITORS

Chu-Biao Xue, Hockessin, Del.; William F. DeGrado, Philadelphia, Pa.; Carl Peter DeCicco, Newark, Del., and Irina Cipora Jacobson, Boothwyn, Pa., assignors to The DuPont Merck Pharmaceutical Company, Wilmington, Del.

Continuation-in-part of Ser. No. 423,197, Apr. 18, 1995, abandoned. This application Apr. 16, 1996, Ser. No. 632,863

Int. Cl.[6] A61K *31/435;31/415;* C07D *471/04;235/16*

U.S. Cl. 514—303 11 Claims

1. A compound of the formula I:

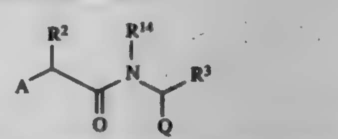

(I)

or pharmaceutically acceptable salts or prodrug forms thereof, wherein:

A is —$C(R^1)(R^{1a})$CONHOH;

Q is selected from:

pyridyl substituted with 0–3 R^5, R^6, and/or R^7,
triazole substituted with 0–3 R^5, R^6, and/or R^7,
thiazole substituted with 0–3 R^5, R^6, and/or R^7,
tetrazole substituted with 0–3 R^5, R^6, and/or R^7,
oxazole substituted with 0–3 R^5, R^6, and/or R^7,
isoxazole substituted with 0–3 R^5, R^6, and/or R^7,
pyrazole substituted with 0–3 R^5, R^6, and/or R^7,
thiopyrazole substituted with 0–3 R^5, R^6, and/or R^7,
isoxazoline substituted with 0–3 R^5, R^6, and/or R^7,
benzimidazole substituted with 1–3 R^5, R^6, and/or R^7, when at least one of R^5, R^6 or R^7 are other than H or $C_1–C_4$ alkyl,
benzoxazole substituted with 0–3 R^5, R^6, and/or R^7,
benzothiazole substituted with 0–3 R^5, R^6, and/or R^7,

When R^3 is a cyclohexyl, cyclohexylmethyl, naphthyl, Q can also be a benzimidazole substituted with 0–3 R^5, R^6, and/or R^7, or an imidazole substituted with 0–3 R^5, R^6, and/or R^7,

The phenyl ring of the benzimidazole, benzoxazole and benzothiazole can be optionally replaced with 1–2 nitrogens.

R^1 and R^{1a} are independently selected from:

H, halogen, OR^{17}, $NR^{10}R^{10a}$, NR^8R^{10a}, $S(O)_mR^{17a}$,
$C_1–C_4$ alkyl substituted with 0–3 R^4,
$C_2–C_4$ alkenyl substituted with 0–3 R^4,
$C_2–C_4$ alkynyl substituted with 0–3 R^4,
$C_6–C_{10}$ aryl substituted with 0–3 R^{18},
a $C_5–C_{11}$ heterocycle containing from 1–4 heteroatoms selected from N, O or S, said heterocycle optionally substituted with 0–3 R^{18}, or
$C_3–C_8$ cycloalkyl,

Alternately, R^1 and R^{1a} can be taken together to form a 3–7 membered carbocyclic or heterocyclic, said heterocyclic ring containing from 1–2 heteroatoms selected from N, O or S;

R^2 is selected from:

H
$C_1–C_6$ alkyl substituted with 0–3 R^{17b},
—O—($C_1–C_8$ alkyl)—R^{20},
—S—($C_1–C_8$ alkyl)—R^{20},

—CH_2O—($C_1–C_8$ alkyl)—R^{20}, or
—CH_2S—($C_1–C_8$ alkyl)—R^{20};

R^3 is selected from:

H,
$C_1–C_6$ alkyl substituted with 0–3 R^{17b},
—($C_1–C_6$ alkylene)—OR^{12},
—($C_1–C_6$ alkylene)—SR^{12},
$C_6–C_{10}$ aryl substituted with 0–3 R^{18}, or
$C_3–C_7$ cycloalkyl;

R^4 is selected from:

—OR^{17}, —SO_mR^{17},
—NR^8R^{10}, —$NHC(=NR^8)N(R^8)R^{10}$,
$C_1–C_4$ alkyl,
aryl substituted with 0–5 R^{18},
$C_3–C_8$ cycloalkyl, or
a heterocycle selected from the group consisting of thienyl, pyridinyl, morpholinyl, furyl, thiazolyl, isothiazolyl, thiazolinyl, thiazolidinyl, isothiazolinyl, piperidinyl, pyrimidinyl, pyridazinyl, pyrazinyl, pyrrolidinyl, pyrrolyl, N-methylpyrrolyl, triazolyl, triazolidinyl, oxazolyl, isoxazolyl, oxazolinyl, isoxazolinyl, oxazolidinyl, oxadiazolyl, oxadiazolidinyl, imidazolyl, imidazolidinyl, said heterocyclic ring system being substituted with 0–5 R^{18};

R^5 is selected from:

hydrogen, halogen, $C_1–C_4$ haloalkyl, hydroxy, $C_1–C_4$ alkoxy, —$NR^{14}R^{15}$, or $C_1–C_6$ alkyl substituted with 0–3 R^{20};

R^6 and R^7 are independently selected from:

H, $C_1–C_4$ alkyl, or $C_6–C_{10}$ aryl;

Alternately, R^6 and R^7 may be taken together to be

1,2-phenylene substituted with 0–2 R^5,
2,3-pyridinylene substituted with 0–2 R^5,
3,4-pyridinylene substituted with 0–2 R^5, or
5,6-pyrimidinylene substituted with 0–2 R^5;

R^8 is a substituent on nitrogen and is selected from

hydrogen,
$C_1–C_6$ alkyl substituted with 0–3 R^{20},
$C_1–C_6$-alkylcarbonyl,
alkoxycarbonyl,
arylalkoxycarbonyl,
alkylaminocarbonyl,
arylsulfonyl,
heteroarylalkoxycarbonyl,
cycloalkoxycarbonyl,
heteroarylsulfonyl,
alkylsulfonyl, or
cycloalkylsulfonyl;

R^{10} is selected from:

hydrogen,
$C_1–C_4$ alkoxy,
$C_1–C_6$ alkyl substituted with 0–4 R^4;

R^{10a} is selected from hydrogen or $C_1–C_4$ alkyl;

R^{10} and R^{10a} can alternatively join to form —$(CH_2)_4$—, —$(CH_2)_5$—, —$CH_2CH_2N(R^{18})CH_2CH_2$—, or —$CH_2CH_2OCH_2CH_2$—;

R^{11} is H, or $C_1–C_4$ alkyl;

R^{12} is $C_1–C_4$ alkyl or $C_6–C_{10}$ aryl;

R^{14} and R^{15} are independently selected from H or $C_1–C_4$ alkyl;

R^{17} is selected from:

hydrogen,
$C_1–C_6$ alkyl substituted with 0–3 R^{17a}
$C_1–C_6$ alkylcarbonyl substituted with 0–3 R^{17a},
$C_1–C_6$ alkoxycarbonyl substituted with 0–3 R^{17a},
phenoxycarbonyl substituted with 0–3 R^{18};

R^{17a} is selected from:

H,
$C_1–C_4$ alkyl,
aryl substituted with 0–5 R^{18},
$C_3–C_8$ cycloalkyl
a heterocycle selected from the group consisting of thienyl, pyridinyl, morpholinyl, furyl, thiazolyl, isothiazolyl, thiazolinyl, thiazolidinyl, isothiazolinyl, piperidinyl, pyrimidinyl, pyridazinyl, pyrazinyl, pyrrolidinyl, pyrrolyl, N-methylpyrrolyl, triazolyl, triazolidinyl, oxazolyl, isoxazolyl, oxazolinyl, isoxazolinyl, oxazolidinyl, oxadiazolyl, oxadiazolidinyl, imidazolyl, imidazolidinyl, said heterocyclic ring system being substituted with 0–5 R^{18};

R^{17b} is selected from:

aryl substituted with 0–5 R^{18},
$C_3–C_8$ cycloalkyl
a heterocycle selected from the group consisting of thienyl, pyridinyl, morpholinyl, furyl, thiazolyl, isothiazolyl, thiazolinyl, thiazolidinyl, isothiazolinyl, piperidinyl, pyrimidinyl, pyridazinyl, pyrazinyl, pyrrolidinyl, pyrrolyl, N-methylpyrrolyl, triazolyl, triazolidinyl, oxazolyl, isoxazolyl, oxazolinyl, isoxazolinyl, oxazolidinyl, oxadiazolyl, oxadiazolidinyl, imidazolyl, imidazolidinyl, said heterocyclic ring system being substituted with 0–5 R^{18};

R^{18}, when a substituent on carbon, is selected from one or more of the following:

phenoxy, benzyloxy, halogen, hydroxy, nitro, cyano, $C_1–C_4$ alkyl, $C_1–C_4$ alkoxy, —CO_2H, sulfonamide, $C_1–C_4$ alkyl substituted with —$NR^{10}R^{10a}$, —$NR^{10}R^{10a}$, $C_1–C_4$ hydroxyalkyl, methylenedioxy, ethylenedioxy, $C_1–C_4$ haloalkyl, $C_1–C_4$ haloalkoxy, $C_1–C_4$ alkoxycarbonyl, $C_1–C_4$ alkylcarbonyloxy, $C_1–C_4$ alkylcarbonyl, $C_1–C_4$ alkylcarbonylamino, —$S(O)_mR^{11}$, —$NHSO_2R^{11}$,

phenyl, optionally substituted with halogen, $C_1–C_4$ alkyl, $C_1–C_4$ alkoxy, hydroxy or $NR^{10}R^{10a}$,

a heterocycle selected from the group consisting of thienyl, pyridinyl, morpholinyl, furyl, thiazolyl, isothiazolyl, thiazolinyl, thiazolidinyl, isothiazolinyl, piperidinyl, pyrimidinyl, pyridazinyl, pyrazinyl, pyrrolidinyl, pyrrolyl, N-methylpyrrolyl, triazolyl, triazolidinyl, oxazolyl, isoxazolyl, oxazolinyl, isoxazolinyl, oxazolidinyl, oxadiazolyl, oxadiazolidinyl, imidazolyl, imidazolidinyl, said heterocyclic ring system being substituted with 0–5 R^{18};

or R^{18} may be a 3- or 4- carbon chain attached to adjacent carbons on the ring to form a fused 5- or 6-membered ring, said 5- or 6- membered ring being optionally substituted with halogen, $C_1–C_4$ alkyl, $C_1–C_4$ alkoxy, hydroxy, —$NR^{10}R^{10a}$, =O or =S when attached to a saturated carbon atom, or =O when attached to sulfur;

R^{18}, when a substituent on nitrogen, is selected from one or more of the following:

phenyl, benzyl, phenethyl, hydroxy, $C_1–C_4$ hydroxyalkyl, $C_1–C_4$ alkoxy, $C_1–C_4$ alkyl, $C_3–C_6$ cycloalkyl, $C_3–C_6$ cycloalkylmethyl, —$CH_2NR^{10}R^{10a}$, —$NR^{10}R^{10a}$, $C_2–C_6$ alkoxyalkyl, $C_1–C_4$ haloalkyl, $C_1–C_4$ alkoxycarbonyl, —CO_2H, $C_1–C_4$ alkylcarbonyloxy, $C_1–C_4$ alkylcarbonyl;

R^{20} is selected from:

aryl substituted with 0–5 R^{18},
a heterocycle selected from the group consisting of thienyl, pyridinyl, morpholinyl, furyl, thiazolyl, isothiazolyl, thiazolinyl, thiazolidinyl, isothiazolinyl, piperidinyl, pyrimidinyl, pyridazinyl, pyrazinyl, pyrrolidinyl, pyrrolyl, N-methylpyrrolyl, triazolyl, triazolidinyl, oxazolyl, isoxazolyl, oxazolinyl, isoxazolinyl, oxazolidinyl, oxadiazolyl, oxadiazolidinyl, imidazolyl, imidazolidinyl, said heterocyclic ring system being substituted with 0–5 R^{18}.

5,703,093

COMPOUNDS AND METHODS FOR THE TREATMENT OF CARDIOVASCULAR, INFLAMMATORY AND IMMUNE DISORDERS

Xiong Cai, Framingham; Aberra Fura, Cambridge, and Changgeng Qian, Wayland, all of Mass., assignors to Cytomed, Inc., Cambridge, Mass.

Filed May 31, 1995, Ser. No. 454,748

Int. Cl.[6] A61K *31/34;* C07D *307/16*

U.S. Cl. 514—312 22 Claims

1. A compound of formula:

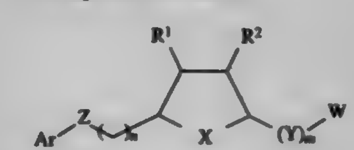

(I)

wherein:

Ar is an aryl or heteroaryl group that is optionally substituted with halo, lower alkoxy, lower aryloxy, W, cyano, or R^3;

m is 0 or 1;

n is 1–6;

W is independently —$AN(OM)C(O)N(R^3)R^4$, —$N(OM)C(O)N(R^3)R^4$, —$AN(R^3)C(O)N(OM)R^4$,

—N(R^3)C(O)N(OM)R^4, —AN(OM)C(O)R^4, —N(OM)C(O)R^4—, AC(O)N(OM)R^4, —C(O)N(OM)R^4, —C(O)NHA;

A is lower alkylene, lower alkenylene, lower alkynylene, alkylarylene or aryl alkylene, or a hetero derivative thereof, wherein one or more carbons optionally can be replaced by O, N, or S (with valence completed with hydrogen or oxygen as necessary), however, —Y—A—, —A—, and —AW— must not include two adjacent heteroatoms;

M is hydrogen, a pharmaceutically acceptable cation, or a metabolically cleavable leaving group;

X is O, S, S(O), $S(O)_2$, NR^3, or CHR^5;

Y is O, S, S(O), $S(O)_2$, NR^3, or CHR^5;

Z is O, S, S(O), $S(O)_2$, NR^3;

R^1 and R^2 are independently hydrogen, lower alkyl, cyclopropylmethyl, ethyl, isopropyl, butyl, pentyl hexyl, and C_{3-8} cycloalkyl, for example, cyclopentyl; halo lower alkyl, halo; or —COOH;

R^3 and R^4 are independently hydrogen or alkyl, alkenyl, alkynyl, aryl, arylalkyl, alkylaryl, C_{1-6} alkoxy-C_{1-10} alkyl, C_{1-6} alkylthio-C_{1-10} alkyl, heteroaryl, or heteroarylalkyl-;

R^5 is hydrogen, lower alkyl, lower alkenyl, lower alkynyl, arylalkyl, alkylaryl, —AN(OM)C(O)N(R^3)R^4, —AN(R^3)C(O)N(OM)R^4, —AN(OM)C(O)R^4, —AC(O)N(OM)R^4, —AS(O)xR^3, —AS(O)$_x$$H_2$C(O)$R^3$, —AS(O)x$CH_2$CH(OH)$R^3$, or —AC(O)NHR^3;

wherein x is 0–2.

5,703,094
QUINOLONE- AND NAPHTHYRIDONECARBOXYLIC ACID DERIVATIVES

Uwe Petersen, Leverkusen; Michael Ruther, Monheim; Thomas Schenke, Bergisch Gladbach; Klaus Dieter Bremm, Recklinghausen, and Rainer Endermann, Wuppertal, all of Germany, assignors to Bayer Aktiengesellschaft, Leverkusen, Germany

Filed Jan. 5, 1996, Ser. No. 583,685

Claims priority, application Germany, Jan. 13, 1995, 195 00 792.1

Int. Cl.[6] A61K *31/47*; C07D *215/233;471/04*

U.S. Cl. 514—312 9 Claims

1. Compounds of the formula (I)

T—Q (I)

in which

Q denotes a radical of the formula

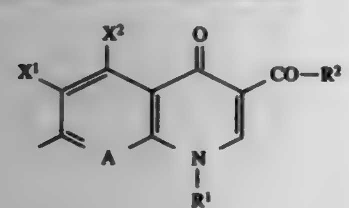

wherein

R^1 represents alkyl which has 1 to 4 carbon atoms and is optionally mono- or disubstituted by halogen or hydroxyl, alkenyl having 2 to 4 carbon atoms, cycloalkyl which has 3 to 6 carbon atoms and is optionally substituted by 1 or 2 fluorine atoms, bicyclo[1.1.1]-pent- 1-yl, 1,1-dimethylpropargyl, 3-oxetanyl, methoxy, amino, methylamino, dimethylamino or phenyl which is optionally mono- or disubstituted by halogen, amino or hydroxyl,

R^2 represents hydroxyl, alkoxy which has 1 to 3 carbon atoms and is optionally substituted by hydroxyl, methoxy, amino or dimethylamino, benzyloxy or (5-methyl-2-oxo-1,3-dioxo-4-yl)methyloxy, acetoxymethyloxy, pivaloyloxymethyloxy, 5-indanyloxy), phthalidinyloxy, 3-acetoxy-2-oxo-butyloxy, nitromethyl or dialkoxycarbonylmethyl having 1 to 2 carbon atoms in each alkyl part,

X^1 represents hydrogen, halogen or nitro,

X^2 represents hydrogen, halogen, amino, hydroxyl, methoxy, mercapto, methyl, halogenomethyl or vinyl,

A represents N or C—R^7, wherein

R^7 represents hydrogen, halogen, CF_3, OCH_3, $OCHF_2$, CH_3, CN, CH═CH_2 or C≡CH, or together with R^1 can also form a bridge having the structure —*O—CH_2—CH—CH_3, —*S—CH_2—CH_2—, —*S—CH_2—CH—CH_3, —*CH_2—CH_2—CH—CH_3 or —*O—CH_2—N—R^8, wherein the atom labelled with * is linked to the carbon atom of A and wherein

R^8 denotes hydrogen, methyl or formyl, and

T denotes a radical of the formula

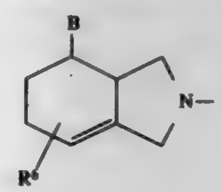

wherein

B represents $(CH_2)_m$—NR^3R^4 or $(CH_2)_m$—OR^5, wherein m represents 0 or 1,

R^3 represents hydrogen, alkyl which has 1 to 3 carbon atoms and is optionally substituted by hydroxyl, acyl having 1 to 3 carbon atoms or alkoxycarbonyl having 1 to 4 carbon atoms in the alkyl part,

R^4 represents hydrogen or methyl and

R^5 represents hydrogen or methyl and

R^6 represents hydrogen or methyl,

and pharmaceutically usable hydrates and acid addition salts thereof, as well as the alkali metal, alkaline earth metal, silver and guanidinium salts of the underlying carboxylic acids.

5,703,095
USE OF N-ARYLMETHYLENE, ETHYLENEDIAMINETRIACETATES, N-ARYMETHYLENE IMINODIACETATES OR N,N'-DIARYLMETHYLENE ETHYLENEDIAMINEACETATES AGAINST OXIDATIVE STRESS

Jean Baptiste Galey, Paris, and Jacqueline Dumats, Villepinte, both of France, assignors to L'Oreal, Paris, France

PCT No. PCT/FR93/01109, § 371 Date Jun. 27, 1995, § 102(e) Date Jun. 27, 1995, PCT Pub. No. WO94/11338, PCT Pub. Date May 26, 1994

PCT Filed Nov. 10, 1993, Ser. No. 436,203

Claims priority, application France, Nov. 13, 1992, 92 13707; Jun. 23, 1993, 93 07641

Int. Cl.[6] C07C *229/16*; A61K *31/195;7/48*; C07D *213/38*

U.S. Cl. 514—332 12 Claims

1. Process for protecting the human body against oxidative stress which comprises administering to it an effective amount of a compound of formula (I):

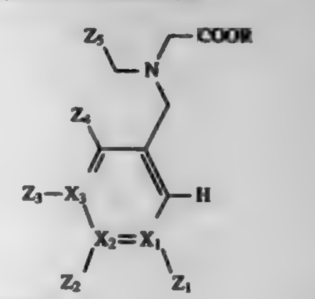

(I)

in which:

Z_1, Z_2 and Z_3, independently of one another, represent NO_2, COOH, CF_3, a halogen atom or an R_1, OR_1, SR_1 or NR_1R_2 group,

Z_4 represents an R_1 group;

where R, R_1 and R_2, independently of one another, represent H or a linear or branched C_1 to C_8 alkyl group,

X_1, X_2 and X_3 represent:

—C=
 |

or —N=, provided that

if X_1=N, then X_2—X_3=C and there is no Z_1 substituent at X_1,

if X_1=N, then X_1═X_3=C and there is no Z_2 substituent at X_2,

if X_3=N, then X_2═X_1=C and there is no Z_3 substituent at X_3, that is to say that it is a pyridine ring;

if X_1, X_2 and X_3 all represent C, it is then a benzene ring;

Z_5 represents:

the group: —COOR (a)

or the group:

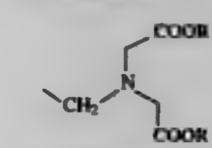

(b)

or the group:

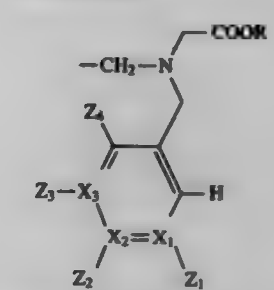

(c)

in which Z_1, Z_2, Z_3, Z_4, X_1, X_2, X_3, R, R_1 and R_2 have the same meanings as above;

or of its salts and metal complexes.

5,703,096
OXIME DERIVATIVES, THEIR PREPARATION AND THEIR THERAPEUTIC USE

Hiroaki Yanagisawa; Takeshi Fujita; Koichi Fujimoto; Takao Yoshioka; Kunio Wada; Minoru Oguchi; Toshihiko Fujiwara, and Hiroyoshi Horikoshi, all of Tokyo, Japan, assignors to Sankyo Company, Limited, Tokyo, Japan

Filed Oct. 5, 1995, Ser. No. 539,541

Claims priority, application Japan, Oct. 7, 1994, 6-243876; Jun. 2, 1995, 7-136788

Int. Cl.[6] A61K *31/44*; C07D *417/12*

U.S. Cl. 514—326 61 Claims

1. A compound of formula (I):

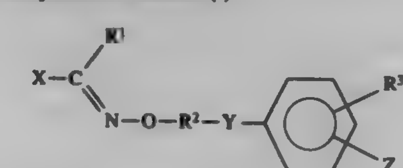

(I)

wherein:

R^1 represents a hydrogen atom or an alkyl group having from 1 to 6 carbon atoms;

R^2 represents an alkylene group having from 2 to 6 carbon atoms;

R^3 represents a hydrogen atom, an alkyl group having from 1 to 6 carbon atoms, an alkoxy group having from 1 to 4 carbon atom, an alkylthio group having from 1 to 4 carbon atoms, a halogen atom, a nitro group, an amino group, a monoalkylamino group having from 1 to 4 carbon atoms, a dialkylamino group whose alkyl groups are the same or different and each has from 1 to 4 carbon atoms, an aryl group having from 6 to 10 carbon atoms in a carbocyclic ring which is unsubstituted or is substituted by at least one of the following substituents α, or an aralkyl group in which an alkyl group having from 1 to 4 carbon atoms is substituted by an aryl group as defined above;

X represents an aryl group having from 6 to 10 carbon atoms in a carbocyclic ring which is unsubstituted or is substituted by at least one of the following substituents α, or an aromatic heterocyclic group having one or two rings, of which at least one is heterocyclic, said group being unsubstituted or being substituted by at least one of the following substituents α;

said substituents α are selected from the group consisting of:

alkyl groups having from 1 to 6 carbon atoms;

halogenated alkyl groups having from 1 to 4 carbon atoms;

hydroxy groups;

acyloxy groups having from 1 to 4 carbon atoms;

alkoxy groups having from 1 to 4 carbon atoms;

alkylenedioxy groups having from 1 to 4 carbon atoms;

aralkyloxy groups in which an alkoxy group having from 1 to 4 carbon atoms is substituted by an aryl group having from 6 to 10 carbon atoms in a carbocyclic ring which is unsubstituted or is substituted by at least one of the following substituents β;

alkylthio groups having from 1 to 4 carbon atoms;

alkylsulfonyl groups having from 1 to 4 carbon atoms;

halogen atoms;

nitro groups;

amino groups;

monoalkylamino groups having from 1 to 4 carbon atoms;

dialkylamino groups, whose alkyl groups are the same or different and each is an alkyl group having from 1 to 4 carbon atoms;

aralkyl groups in which an alkyl group having from 1 to 4 carbon atoms is substituted by an aryl group having from 6 to 10 carbon atoms in a carbocyclic ring which is unsubstituted or is substituted by at least one of the following substituents β;

aryl groups having from 6 to 10 carbon atoms in a carbocyclic ring which is unsubstituted or is substituted by at least one of the following substituents β;

aryloxy groups in which the aryl part has from 6 to 10 carbon atoms in a carbocyclic ring which is unsubstituted or is substituted by at least one of the following substituents β;

arylthio groups in which the aryl part has from 6 to 10 carbon atoms in a carbocyclic ring which is unsubstituted or is substituted by at least one of the following substituents β;

arylsulfonyl groups in which the aryl part has from 6 to 10 carbon atoms in a carbocyclic ring which is unsubstituted or is substituted by at least one of the following substituents β;

arylsulfonylamino groups in which the aryl part has from 6 to 10 carbon atoms in a carbocyclic ring which is unsubstituted or is substituted by at least one of the following substituents β, and in which the nitrogen atom is unsubstituted or is substituted by an alkyl group having from 1 to 6 carbon atoms;

groups of formula —R^X;

groups of formula —OR^X;

groups of formula —SR^X;

groups of formula —SO_2R^X; and

groups of formula —N(R^Z)SO_2R^X;

in which R^X represents a pyridyl heterocyclic group or an aromatic heterocyclic ring having 5 ring atoms of which from 1 to 3 are selected from the group consisting of nitrogen, oxygen and sulfur atoms or a fused ring system in which such an aromatic heterocyclic ring is fused to an aryl group having from 6 to 10 carbon atoms in a carbocyclic ring; and R^Z represents an alkyl group having from 1 to 6 carbon atoms;

said substituents β are selected from the group consisting of alkyl groups having from 1 to 6 carbon atoms, halogenated alkyl groups having from 1 to 4 carbon atoms, alkoxy groups having from 1 to 4 carbon atoms, halogen atoms, and alkylenedioxy groups having from 1 to 4 carbon atoms;

Y represents an oxygen atom, a sulfur atom or a group of formula >N—R^4, in which R^4 represents a hydrogen atom, an alkyl group having from 1 to 6 carbon atoms or an acyl group having from 1 to 8 carbon atoms; and

Z represents a group of formula (Za), (Zb), (Zc) or (Zd):

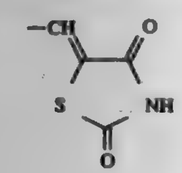

(Za)

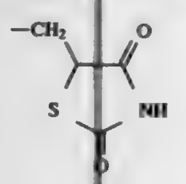

(Zb)

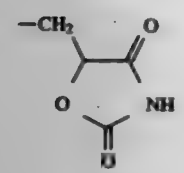

(Zc)

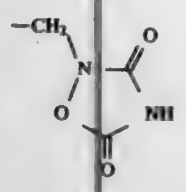

(Zd)

and salts thereof with the proviso that at least one of R^3 and X contains a pyridyl group.

5,703,097

5-PYRROLYL-2-PYRIDYLMETHYLSULFINYL BENZIMIDAZOLE DERIVATIVES

Su Ung Kim; Dong Yeon Kim, both of Seoul; Gi ju Chung, Puchun; Sung Kol Hong, Suwon; Sung Jun Park, Seoul; Sang Hoon Nam, Anyang, and Yong Suk Lee, Suwon, all of Rep. of Korea, assignors to Il-Yang Pharm. Co., Ltd., Seoul, Rep. of Korea

PCT No. PCT/KR94/00098, § 371 Date Oct. 20, 1995, § 102(e) Date Oct. 20, 1995, PCT Pub. No. WO95/23140, PCT Pub. Date Aug. 31, 1995

PCT Filed Jul. 22, 1994, Ser. No. 537,846

Claims priority, application Rep. of Korea, Feb. 28, 1994, 3833

Int. Cl.[6] C07D *401/12;* **A61K** *31/44*

U.S. Cl. 514—338 **5 Claims**

1. A compound having the following formula (I),

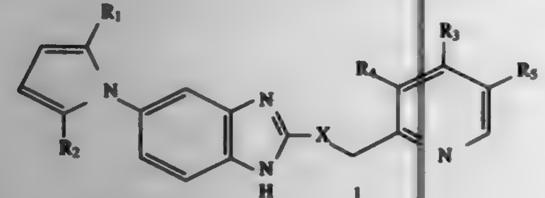

(I)

1

or a salt thereof, in which

X represents S, SO or SO_2,

R_1 and R_2 independently from each other represent hydrogen or alkyl,

R_3 represents hydrogen, C_1–C_8 alkyl, —SR_6, —$N(R_7)_2$, 1-piperidinyl, 4-morpholinyl, 4-methylpiperazin-1-yl, 1-pyrrolidinyl, —OR_6, or —$O(CH_2)_m$—Z, wherein

R_6 represents C_1–C_4 alkyl, C_2–C_4 alkenyl, C_3–C_{10} cycloalkyl, C_2–C_5 fluoroalkyl, or phenyl or benzyl, each of which independently is substituted with one or more halogen or C_1–C_4 alkyl or alkoxy optionally substituted with halogen,

R_7 represents hydrogen or C_1–C_5 alkyl,

Z represents a group —$O(CH_2)_p$—OR_8, —$O(CH_2)_q$—R_9or —$O(CH_2)_rO(CH_2)_s$—OR_{10}, wherein

p and q independently from each other denote an integer of 1 to 3,

r and s independently from each other denote an integer of 1 to 5,

R_8 represents hydrogen, lower alkyl, aryl or aralkyl,

R_9 represents hydrogen alkoxycarbonyl, or aryl, and

R10 represents hydrogen or lower alkyl,

m represents an integer of 2 to 10, and

R_4 and R_5 independently from each other represent hydrogen or C_1–C_5 alkyl.

5,703,098

IMMUNOTHERAPEUTIC IMIDES/AMIDES

George W. Muller, Bridgewater; Mary Shire, North Plainfield, and David I. Stirling, Branchburg, all of N.J., assignors to Celgene Corporation, Warren, N.J.

Continuation-in-part of Ser. No. 366,667, Dec. 30, 1994, abandoned. This application Dec. 3, 1996, Ser. No. 759,788

Int. Cl.[6] A61K *31/44;* **C07D** *209/48*

U.S. Cl. 514—339 **20 Claims**

1. A compound having the formula:

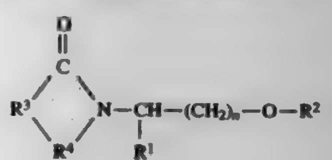

wherein

R^1 is (i) straight, branched, or cyclic, unsubstituted alkyl of 1 to 12 carbon atoms; (ii) straight, branched, or cyclic, substituted alkyl of 1 to 12 carbon atoms; (iii) phenyl; or (iv) phenyl substituted with one or more substituents each selected independently of the other from the group consisting of nitro, cyano, trifluoromethyl, carbethoxy, carbomethoxy, carbopropoxy, acetyl, carbamoyl, acetoxy, carboxy, hydroxy, amino, acylamino, alkylamino, di(alkyl)amino, alkyl of 1 to 10 carbon atoms, cycloalkyl of 3 to 10 carbon atoms, bicycloalkyl of 5 to 12 carbon atoms, alkoxy of 1 to 10 carbon atoms, cycloalkoxy of 3 to 10 carbon atoms, bicycloalkoxy of 5 to 12 carbon atoms, and halo;

R^2 is hydrogen, alkyl of 1 to 8 carbon atoms, benzyl, pyridylmethyl, or alkoxymethyl;

R^3 is (i) ethylene, (ii) vinylene, (iii) a branched alkylene of 3 to 10 carbon atoms, (iv) a branched alkenylene of 3 to 10 carbon atoms, (v) cycloalkylene of 4 to 9 carbon atoms unsubstituted or substituted with one or more substituents each selected independently from the group consisting of nitro, cyano, trifluoromethyl, carbethoxy, carbomethoxy, carbopropoxy, acetyl, carbamoyl, acetoxy, carboxy, hydroxy, amino, amino substituted with alkyl of 1 to 6 carbon atoms, amino substituted with acyl of 1 to 6 carbon atoms, alkyl of 1 to 10 carbon atoms, alkoxy of 1 to 12 carbon atoms, and halo, (vi) cycloalkenylene of 4 to 9 carbon atoms unsubstituted or substituted with one or more substituents each selected independently from the group consisting of nitro, cyano, trifluoromethyl, carbethoxy, carbomethoxy, carbopropoxy, acetyl, carbamoyl, acetoxy, carboxy, hydroxy, amino, amino substituted with alkyl of 1 to 6 carbon atoms, amino substituted with acyl of 1 to 6 carbon atoms, alkyl of 1 to 10 carbon atoms, alkoxy of 1 to 12 carbon atoms, and halo, (vii) o-phenylene unsubstituted or substituted with one or more substituents each selected independently from the group consisting of nitro, cyano, trifluoromethyl, carbethoxy, carbomethoxy, carbopropoxy, acetyl, carbamoyl, acetoxy, carboxy, hydroxy, amino, amino substituted with alkyl of 1 to 6 carbon atoms, amino substituted with acyl of 1 to 6 carbon atoms, alkyl of 1 to 10 carbon atoms, alkoxy of 1 to 12 carbon atoms, and halo, (viii) naphthyl, or (ix) pyridyl;

R^4 is —CX—, —CH_2— or —CH_2CX—;

X is O or S; and,

n is 0, 1, 2, or 3.

5,703,099

PHENOXYACETIC ACID DERIVATIVES

Nobuyuki Hamanaka; Kanji Takahashi, and Hidekado Tokumoto, all of Osaka, Japan, assignors to Ono Pharmaceutical Co., Ltd., Osaka, Japan

Division of Ser. No. 293,218, Aug. 19, 1994, Pat. No. 5,536,736, which is a division of Ser. No. 24,306, Mar. 1, 1993, Pat. No. 5,378,716. This application May 3, 1996, Ser. No. 642,598

Claims priority, application Japan, Feb. 28, 1992, 4-78330

Int. Cl.[6] C07D *413/02;261/02;* **A61K** *31/44;31/41*

U.S. Cl. 514—340 **7 Claims**

1. A phenoxyacetic acid compound of the formula (I):

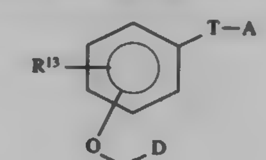

(I)

wherein A is

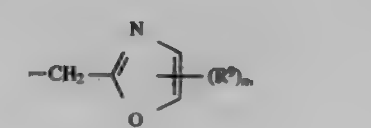

xiv)

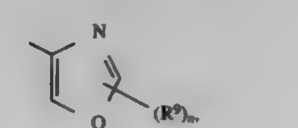

xv)

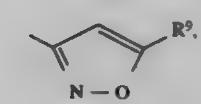

xvi)

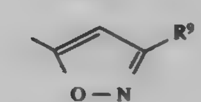

xvii)

T is

i) single bond,

ii) C1–6 alkylene,

iii) C2–6 alkenylene or

iv) —O—$(CH_2)_s$—;

D is

i) —CO_2R^{10} or

ii) —$CONR^{11}R^{12}$;

R^9 is

i) hydrogen,

ii) phenyl,

iii) C1–4 alkyl or

iv) C1–4 alkyl substituted by one or two of phenyl or 4–7 membered monocyclic hetero ring containing one nitrogen;

R^{10} is hydrogen or C1–12 alkyl;

$R^{11}$and R^{12} each, independently, is hydrogen or C1–4 alkyl or R^{11} and R^{12}, taken together with nitrogen bond to R^{11} and R^{12} is the residue of an amino acid;

R^{13} is hydrogen, C1–4 alkyl, C1–4 alkoxy or nitro;

n is 1–2,

s is 2–4;

and the rings of the phenyl or the hetero ring of R^9 may also be substituted by one to three of C1–C4 alkyl, C1–C4 alkoxy, halogen, nitro or trihalomethyl;

or a non-toxic salt thereof or a non-toxic acid addition salt thereof.

5,703,100

MODULATORS OF ACETYLCHOLINE RECEPTORS

Ian A. McDonald; Jeffrey P. Whitten, and Nicholas D. Cosford, all of San Diego, Calif., assignors to SIBIA Neurosciences, Inc., La Jolla, Calif.

Continuation-in-part of Ser. No. 337,640, Nov. 10, 1994, Pat. No. 5,594,011. This application Jun. 7, 1995, Ser. No. 485,398

Int. Cl.[6] C07D *401/04;* **A61K** *31/44*

U.S. Cl. 514—343 **40 Claims**

1. A compound having the structure

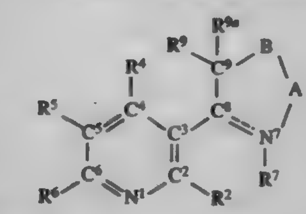

I

wherein

A is a 1, 2 or 3 atom bridging species which forms part of a saturated or monounsaturated 5-, 6- or 7-membered ring including N^7, C^8, C^9 and B;

B is selected from —O—, —S—, —NR^{10}, wherein R^{10} is selected from hydrogen, lower alkyl, aryl, substituted aryl, alkylaryl, substituted alkylaryl, arylalkyl, substituted arylalkyl; —$C^{10}HR^{10a}$—, wherein R^{10a} is selected from hydrogen, lower alkyl, hydroxyalkyl, aryl, aryloxyalkyl, fluoro, trifluoromethyl, cyano, cyanomethyl, —OR', —NR'_2, or —SR', wherein each R' is independently hydrogen, lower alkyl, alkenyl, alkynyl or aryl, provided, however, that neither the —NR'_2 nor the —SR' functionality is conjugated with an alkenyl or alkynyl functionality; or B is =$C^{10}R^{10a}$— or =N—, provided there is no double bond in the ring between A and B, or between B and C^9 when there is a double bond between N^7 and C^8, and provided that B is not a heteroatom when A is a 1 atom bridging species;

R^2, R^4, and R^6 are each independently selected from hydrogen, alkyl, substituted alkyl, cycloalkyl, substituted cycloalkyl, alkenyl, substituted alkenyl, alkynyl, substituted alkynyl, aryl, substituted aryl, alkylaryl, substituted alkylaryl, arylalkyl, substituted arylalkyl, heterocyclic, substituted heterocyclic, trifluoromethyl, halogen, cyano, nitro;

—S(O)R', —S(O)R' or —$S(O)_2NHR'$, wherein each R' is as defined above, provided, however, that when R^2, R^4, R^5 or R^6 is —S(O)R', R' is not hydrogen, alkenyl or alkynyl, and provided that when R^2, R^4, R^5or R^6 is $S(O)_2NHR'$, R' is not alkenyl or alkynyl;

—C(O)R", wherein R" is selected from hydrogen, alkyl, substituted alkyl, alkoxy, alkylamino, alkenyl, substituted alkenyl, alkynyl, substituted alkynyl, aryl, substituted aryl, aryloxy, arylamino, alkylaryl, substituted alkylaryl, arylalkyl, substituted arylalkyl, heterocyclic, substituted heterocyclic or trifluoromethyl, provided, however, that the carbonyl functionality is not conjugated with an alkenyl or alkynyl functionality;

—OR‴, wherein R‴ is selected from hydrogen, alkyl, substituted alkyl, cycloalkyl, substituted cycloalkyl, alkenyl, substituted alkenyl, alkynyl, substituted alkynyl, aryl, substituted aryl, alkylaryl, substituted alkylaryl, arylalkyl, substituted arylalkyl, aroyl, substituted aroyl, heterocyclic, substituted heterocyclic, acyl, trifluoromethyl, alkylsulfonyl or arylsulfonyl, provided, however, that the —OR‴ functionality is not conjugated with an alkenyl or alkynyl functionality;

—NR‴$_2$, wherein each R‴ is independently as defined above, or each R‴ and the N to which they are attached can cooperate to form a 4-, 5-, 6- or 7-membered ring; provided, however, that the —NR‴$_2$ functionality is not conjugated with an alkenyl or alkynyl functionality;

—SR"", wherein R"" is selected from hydrogen, alkyl, substituted alkyl, alkenyl, substituted alkenyl, alkynyl, substituted alkynyl, aryl, substituted aryl, alkylaryl, substituted alkylaryl, arylalkyl, substituted arylalkyl, heterocyclic, substituted heterocyclic or trifluoromethyl, provided, however,

that the —SR"" functionality is not conjugated with an alkenyl or alkynyl functionality; or
—SiR'""$_3$, wherein R'"" is selected from alkyl or aryl;
R^5 is selected from alkynyl, substituted alkynyl, aryl or substituted aryl;
R^7 is selected from hydrogen, lower alkyl, aryl, substituted aryl, alkylaryl, or substituted alkylaryl, or R^7 is absent when there is a double bond between N^7 and C^8; and
R^9 and R^{9a} are each independently selected from hydrogen, lower alkyl, hydroxyalkyl, aryl, aryloxyalkyl, fluoro, trifluoromethyl, cyano, cyanomethyl, —OR', —NR'$_2$, or —SR', wherein each R' is as defined above, provided, however, that neither the —NR'$_2$ nor the —SR' functionality is conjugated with an alkenyl or alkynyl functionality.

5,703,101
AGONIST-ANTAGONIST COMBINATION TO REDUCE THE USE OF NICOTINE AND OTHER DRUGS

Jed E. Rose, Venice, and Edward D. Levin, Los Angeles, both of Calif., assignors to Robert J. Schaap, a part interest

Continuation of Ser. No. 235,454, Apr. 29, 1994, Pat. No. 5,574,052, which is a continuation of Ser. No. 54,144, Apr. 30, 1993, which is a continuation of Ser. No. 855,868, Mar. 23, 1992, Pat. No. 5,316,759, which is a continuation of Ser. No. 231,092, Aug. 11, 1988, abandoned, which is a continuation-in-part of Ser. No. 840,072, Mar. 17, 1986, Pat. No. 4,846,199. This application Dec. 11, 1995, Ser. No. 570,530
Int. Cl.^{6} A61K *31/44;31/465*
U.S. Cl. 514—343 **18 Claims**

1. A pharmacologic composition for the treatment and reduction of dependency on an abused stimulating drug selected from the class consisting of cocaine and amphetamines where the addictive effects of this drug causes activation of receptors which are actuated by the drug, said composition comprising:
a) a bromocriptine agonist which causes receptors for the drug to become activated, said bromocriptine agonist being present in the composition in an amount to provide a daily dose of this agonist of 40 to 100 milligrams per day and thereby partially satiate the needs for the drug by a subject using the composition;
b) an antagonist selected from the class consisting of fluphenazine, fluphenazine hydrochloride and fluphenazine decanoate sufficient to at least partially block the effects of the drug, the receptors which are responsive to the drug also being sensitive to the antagonist, said amounts of the drug and the antagonist sufficient so that there is a substantial systemic amount of the antagonist present when there is a substantial systemic amount of the drug present in the blood of a user of the composition, the drug or the agonist and the antagonist when administered in said daily dose amounts will preclude intoxication or overdosing and also reduce a satisfaction of a subject when the drug is administered and also reduce a state of withdrawal from the drug in the subject, such that the drug or agonist is complemented by the antagonist to occupy a greater number of receptors of the subject using the drug than would be occupied by the drug alone.

5,703,102
1,2,5-THIADIAZOLO-1,3-DITHIOLE-2-ONE (OR THIONE) AS ANTIMICROBIAL AND MARINE ANTIFOULING AGENTS

Ravi B. Shankar; Duane R. Romer, and R. Garth Pews, all of Midland, Mich., assignors to The Dow Chemical Company, Midland, Mich.

Filed Jul. 10, 1996, Ser. No. 679,766
Int. Cl.^{6} A01N *43/36;43/82*
U.S. Cl. 514—362 **7 Claims**

4. A method for preventing the growth of marine organisms on a surface exposed to a marine environment in which marine organisms grow comprising contacting said surface with a paint composition containing an inert diluent and a vinyl resin binder, an epoxy binder or a polyurethane binder and a marine antifouling effective amount of 1,2,5-thiadiazolo-1,3-dithiole-2-one or thione which corresponds to the formula:

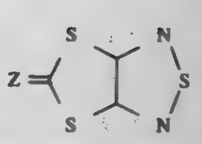

(I)

wherein Z is oxygen or sulfur as the active compound.

5,703,103
THIAZOLYLPYRAZOLINONES AND THEIR USE FOR PROTECTING TECHNICAL MATERIALS

Lutz Heuer, Krefeld; Peter Wachtler, Köln; Martin Kugler, Leichlingen; Heinrich Schrage, Krefeld, and Klaus Sasse, Bergisch Gladbach, all of Germany, assignors to Bayer Aktiengesellschaft, Leverkusen, Germany

PCT No. PCT/EP95/01032, § 371 Date Sep. 24, 1996, § 102(e) Date Sep. 24, 1996, PCT Pub. No. WO95/26962, PCT Pub. Date Oct. 12, 1995
PCT Filed Mar. 20, 1995, Ser. No. 716,239
Claims priority, application Germany, Mar. 31, 1994, 44 11 235.1
Int. Cl.^{6} A01N *43/78;* **C07D** *417/04*
U.S. Cl. 514—365 **7 Claims**

1. Thiazolylpyrazolinone derivatives of the formula

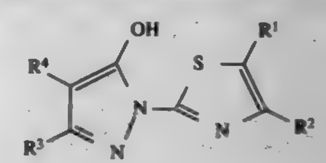

(I)

in which
R^1, R^2, R^3 independently of each other each represent hydrogen, alkyl or halogen, and
R^4 represents hydrogen or unsubstituted or substituted alkyl, alkenyl, alkinyl, cycloalkyl, cycloalkenyl, alkyl (cycloalkyl), alkenyl (cycloalkenyl), alkoxy, alkylthio, aralkoxy, aralkylthio, aralkyl, aryl, hetaryl, aryloxy, hetaryloxy, arylthio, hetarylthio, alkoxycarbonyl, alkoxycarbonalalkyl or cyanoalkyl, or their acid addition products or metal complexes, wherein if R^4 represents substituted hetaryl, then the substituents are selected from the group consisting of halogen, alkyl, alkoxy or alkylthio.

5,703,104
CYCLIC AMIDES AND DERIVATIVES THEREOF

James V. Peck; Gevork Minaskanian, both of Richmond, and Mark C. Sleevi, Midlothian, all of Va., assignors to Durham Pharmaceuticals LLC, Durham, N.C.

Filed Jul. 3, 1996, Ser. No. 674,843
Int. Cl.^{6} A61K *31/41;31/40;* **C07D** *277/04;263/04*
U.S. Cl. 514—369 **9 Claims**

1. A compound having one of Formulae I–IV:

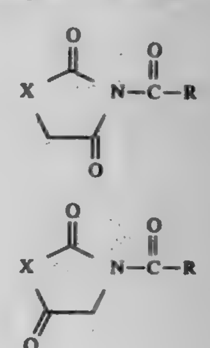

-continued

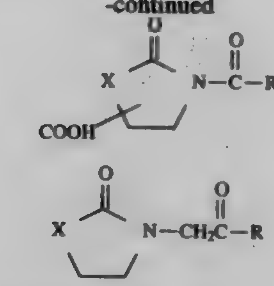

and pharmaceutically acceptable salts and esters thereof; wherein
R is a C_{6-20} hydrocarbyl radical;
X is one of —CH_2—, —NH—, —O— or —S—.

5,703,105
STABLE, SOLID FORM ANTIMICROBIAL COMPOSITIONS COMPRISING 3-ISOTHIAZOLONES

George Harvey Redlich, Norristown; Gary Lewis Willingham, Glenside, and John Steven Chapman, Ambler, all of Pa., assignors to Rohm and Haas Company, Phila., Pa.

Continuation-in-part of Ser. No. 625,265, Dec. 10, 1990, abandoned. This application Oct. 30, 1991, Ser. No. 784,852
Int. Cl.^{6} A61K *31/425*
U.S. Cl. 514—372 **10 Claims**

1. Antimicrobial composition comprising (A) a 3-isothiazolone compound, and (B) a water soluble polymeric carrier which is solid at room temperature, said carrier functioning to stabilize said 3-isothiazolone against chemical decomposition at room temperature and at applications temperature, said composition being solid at room temperature.

5,703,106
ANTAGONISTS OF ENDOTHELIN RECEPTORS

Thomas Früh, Magden; Thomas Pitterna, Basel, both of Switzerland; Toshiki Murata, Nara-ken, Japan; Lene D. Svensson, Lemvig, Denmark; Yoko Yuumoto, and Junichi Sakaki, both of Hyogo, Japan, assignors to Japat Ltd., Basel, Switzerland

PCT No. PCT/EP95/01013, § 371 Date Sep. 25, 1996, § 102(e) Date Sep. 25, 1996, PCT Pub. No. WO95/26360, PCT Pub. Date Oct. 5, 1995
PCT Filed Mar. 17, 1995, Ser. No. 718,593
Claims priority, application European Pat. Off., Mar. 28, 1994, 94 810 191
Int. Cl.^{6} C07D *261/06;* **A61K** *31/42*
U.S. Cl. 514—378 **18 Claims**

1. A compound of formula (I)

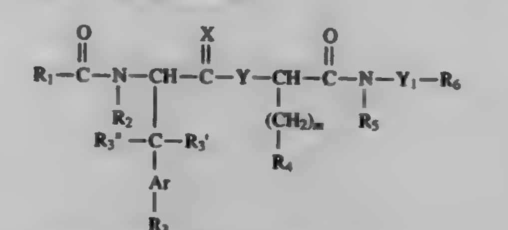

(I)

Ar represents a direct bond or arylene;
m is 0, 1, 2, or 3;
R_1 is lower alkyl, cycloalkyl-lower alkyl, aryl-lower alkyl, cycloalkyl, aryl, aryl-cycloalkyl, lower alkoxy, or aryloxy;
R_2 is hydrogen, lower alkyl, aryl-lower alkyl, cycloalkyl, or cycloalkyl-lower alkyl;
R_3 represents hydrogen, hydroxy, amino, nitro, lower alkyl, cycloalkyl, or aryl-lower alkyl, provided that Ar is a direct bond, or represents aryl;
R_3' represents hydrogen, lower alkyl, cycloalkyl, aryl-lower alkyl, or aryl; or
R_3 and R_3' together form a ring structure, provided that Ar is a direct bond;
R_3'' is hydrogen, lower alkyl or aryl; or
R_2 and R_3'' together form the lower alkylene group —$(CH_2)_n$— wherein n is an integer of 1, 2 or 3; or
R_2 and R_3'' together form a group represented by the formula: —$(CH_2)_o$—Ar_1— or —Ar_1—$(CH_2)_o$—, respectively, wherein o is zero or an integer of 1 or 2, and Ar_1 is arylene;
C(=X) is C(=O), C(=S), C(=NH), C(=N-lower alkyl); C=NH—OH, or CH_2; and Y is a direct bond, —NH—,

oxygen, or methylene; or
C(=X) is CHOH and Y is a direct bond or methylene;
R_4 is lower alkyl, lower alkenyl, cycloalkyl, aryl-lower alkyl, aryl-lower alkenyl, or aryl;
R_5 is hydrogen, lower alkyl, aryl-lower alkyl, cycloalkyl, or cycloalkyl-lower alkyl;
R_6 represents lower alkyl, halo-lower alkyl, hydroxy-lower alkyl, acyloxy-lower alkyl, lower alkoxy-lower alkyl, aryloxy-lower alkyl, aryl-lower alkyl, lower alkenyl, lower alkenyl which substituted by at least one substituent selected from the group consisting of carboxy, lower alkoxycarbonyl, hydroxy, lower alkoxy, amino, lower alkylamino and di-lower alkylamino, or represents aryl-lower alkenyl, aryl or lower alkyl which is substituted by carboxy or lower alkoxycarbonyl and also by amino, lower alkylamino or di-lower alkylamino; or
R_5 and R_6 together form the lower alkylene group —$(CH_2)_p$— wherein p is an integer of 3–5, or together form a group represented by the formulae: —$(CH_2)_q$—Ar_1— or —Ar_1—$(CH_2)_q$—, wherein q is zero or an integer of 1 or 2, and Ar_1 is arylene; and
Y_1 represents —SO_2—, —O—, —NH—, —NH—CO—, —NH—CO—O— or —NH—SO_2—; and wherein "aryl", it being a mono- or bivalent aryl radical or aryl moiety, respectively, represents, in each case, a corresponding carbocyclic or heterocyclic aryl radical or aryl moiety, respectively; or a salt thereof.

5,703,107
3-AMINOINDOLYL DERIVATIVES

Francesco G. Salituro, Fairfield, and Bruce M. Baron, Cincinnati, both of Ohio, assignors to Merrell Pharmaceuticals Inc., Cincinnati, Ohio

Division of Ser. No. 372,710, Jan. 13, 1995, Pat. No. 5,491,153, which is a continuation of Ser. No. 197,101, Feb. 15, 1994, abandoned, which is a continuation of Ser. No. 977,974, Nov. 18, 1992, abandoned, which is a division of Ser. No. 795,572, Nov. 12, 1991, Pat. No. 5,189,054, which is a continuation-in-part of Ser. No. 608,457, Nov. 2, 1990, abandoned. This application Nov. 6, 1995, Ser. No. 554,212
Int. Cl.^{6} C07D *31/405*
U.S. Cl. 514—381 **8 Claims**

1. A compound of the formula:

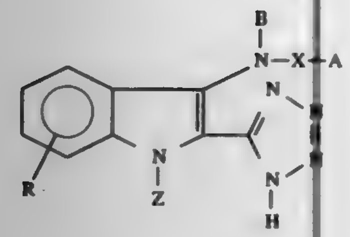

Ib

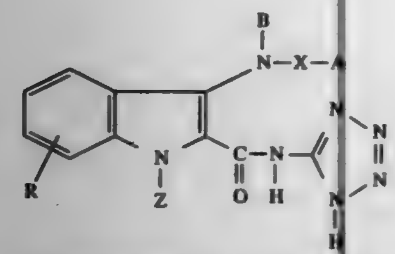

Ic

in which Z is represented by H, C_1–C_4 alkyl, phenyl, substituted phenyl in which the phenyl ring may be optionally substituted with up to 3 substituents, wherein each substitutent is independently selected from the group consisting of halogen, C_{1-4} alkyl, C_{1-4} alkoxy, CF_3, OCF_3, OH, CN, NH_2 and NO_2, or a phenylalkyl substitutent in which the phenyl ring may be optionally substituted with up to 3 substitutents, wherein each substituent is independently selected from the group consisting of halogen, C_{1-4} alkyl, C_{1-4} alkoxy, CF_3, OCF_3, OH, CN, NH_2 and NO_2; R is represented by hydrogen, halogen, C_1–C_4 alkyl, C_1–C_4 alkoxy, CF_3, OCF_3, OH, NO_2, or CN; B is represented by hydrogen, C_1–C_4 alkyl, phenylalkyl substitutent in which the phenyl ring may be optionally substituted with up to 3 substitutents, wherein each substituent is independently selected from the group consisting of halogen, C_{1-4} alkyl, C_{1-4} alkoxy, CF_3, OCF_3, OH, CN, NH_2 and NO_2, or —CH_2—COR_1 wherein R_1 is represented by a substituent selected from the group consisting of —OH, —OR_3, —NR_4R_5, —OCH_2OR_3, and —O—$(CH_2)_m$—NR_6R_7, in which m is an integer of from 1–4; R_3 is represented by C_{1-4} alkyl, phenyl, substituted phenyl in which the phenyl ring may be optionally substituted with up to 3 substituents, wherein each substitutent is independently selected from the group consisting of halogen, C_{1-4} alkyl, C_{1-4} alkoxy, CF_3, OCF_3, OH, CN, NH_2 and NO_2 or a phenylalkyl substitutent in which the phenyl ring may be optionally substituted with up to 3 substitutents, wherein each substituent is independently selected from the group consisting of halogen, C_{1-4} alkyl, C_{1-4} alkoxy, CF_3, OCF_3, OH, CN, NH_2 and NO_2; R_4 and R_5 are each independently represented by hydrogen or a C_{1-4} alkyl; R_6 and R_7 are each independently represented by hydrogen or a C_{1-4} alkyl; X is represented by CO; A is represented by a substituent selected from the group consisting of:

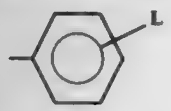

or

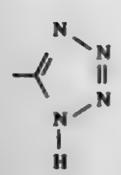

in which L is represented by a substituent selected from the group consisting of hydrogen, halogen, C_1–C_4 alkyl, C_1–C_4 alkoxy, CF_3, OCF_3, OH, NO_2, NH_2, phenylalkyl, acetyloxy or CN; and the pharmaceuticaly acceptable salts thereof with the proviso that with respect to a substituted phenyl ring, there may not be more than one NH_2 or NO_2 nor both an alkoxy and a hydroxy on any one phenyl ring.

5,703,108
BONE DEPOSITION BY CERTAIN PROSTAGLANDIN AGONISTS

Kimberly O. Cameron, East Lyme, Conn.; Paul A. Dasilva-Jardine, Providence, R.I., and Robert L. Rosati, Stonington, Conn., assignors to Pfizer Inc., New York, N.Y.

Filed Feb. 20, 1997, Ser. No. 803,307

Int. Cl.[6] A61K *31/41*

U.S. Cl. 514—382 16 Claims

1. A method for treating a mammal having a condition which presents with low bone mass comprising administering to a mammal having a condition which presents with low bone mass a therapeutically effective amount of a compound of Formula I

Formula I

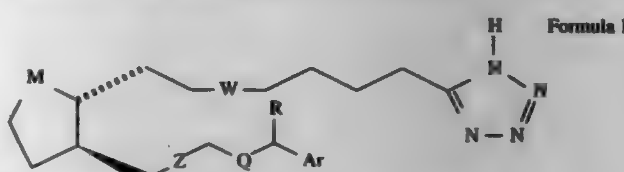

or a pharmaceutically-acceptable cationic salt thereof wherein

Ar is 3-thienyl, 5(C_1–C_4alkyl)-2-thienyl, 5(C_1–C_4alkyl)-3-thienyl, α-napthyl, β-napthyl, tropyl, 3,4-methylenedioxyphenyl;

R is H or methyl;

W is a single bond or a cis double bond;

Z is a single bond or a trans double bond; and

M and Q are each independently carbonyl,

5,703,109
SELECTIVE AROMATASE INHIBITING COMPOUNDS

Arto Johannes Karjalainen; Maria-Liisa Södervall; Arja Marketta Kalapudas; Reino Olavi Pelkonen, all of Oulu; Aire Marin Laine, Turku; Risto Arvo Sakari Lammintausta, Turku, and Jarmo Sakari Salonen, Turku, all of Finland, assignors to Orion-yhtymä Oy, Espoo, Finland

PCT No. PCT/FI93/00539, § 371 Date May 19, 1995, § 102(e) Date May 19, 1995, PCT Pub. No. WO94/13645, PCT Pub. Date Jun. 23, 1994

PCT Filed Dec. 14, 1993, Ser. No. 436,389

Claims priority, application United Kingdom, Dec. 16, 1992, 9226209

Int. Cl.[6] A61K *31/41;* **C07D** *249/08*

U.S. Cl. 514—383 16 Claims

1. A compound of formula (I)

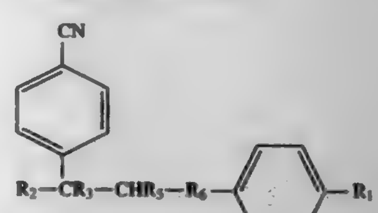

wherein R_1 is H, CH_3, OCH_3, NO_2, NH_2, CN, CF_3, CHF_2, CH_2F or halogen; R_2 is 1,2,4-triazolyl, R_3 is H or OH, R_5 is H or OH; R_6 is methylene, ethylene, —CHOH—, —CH_2—CHOH— or —CHOH—CH_2—; or a stereoisomer; or a non-toxic pharmaceutically acceptable acid addition salt thereof with the proviso that when R_3 and R_5 are H, R_6 cannot be methylene or ethylene.

5,703,110
BENZIMIDAZOLE DERIVATIVES, THEIR PRODUCTION AND USE

Takehiko Naka, Kobe; Kohei Nishikawa, Kyoto, and Takeshi Kato, Higashiosaka, all of Japan, assignors to Takeda Chemical Industries, Ltd., Osaka, Japan

Division of Ser. No. 131,667, Oct. 5, 1993, which is a division of Ser. No. 58,739, May 10, 1993, Pat. No. 5,401,764, which is a division of Ser. No. 997,703, Jan. 5, 1993, Pat. No. 5,328,919, which is a division of Ser. No. 687,238, Apr. 18, 1991, Pat. No. 5,196,444. This application Sep. 17, 1996, Ser. No. 715,100

Claims priority, application Japan, Apr. 27, 1990, 2-113148; May 30, 1990, 2-141942; Aug. 6, 1990, 2-208662; Oct. 1, 1990, 2-264579; Dec. 24, 1990, 2-413679

Int. Cl.[6] A01N *43/50;* **A61K** *31/41;* **C07D** *235/12;403/10*

U.S. Cl. 514—396 3 Claims

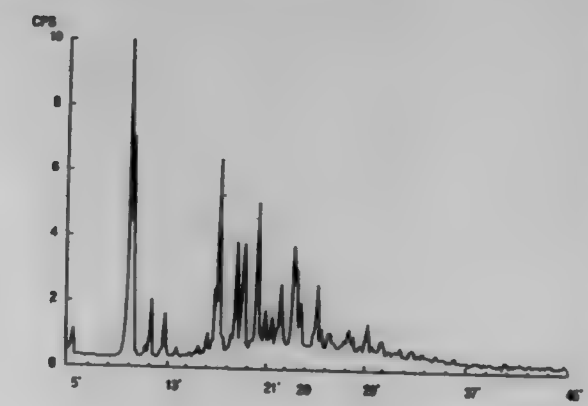

1. 2-Ethoxy-1-[[2'-(1H-tetrazol- 5-yl) biphenyl-4-yl]methyl]benzimidazole-7-carboxylic acid or a pharmaceutically acceptable salt thereof.

5,703,111
STABLE INJECTABLE FORMULATION OF BMY-25067

Uday S. Gogate, North Brunswick; Shreeram N. Agharkar, Lawrenceville, and Lawan Phusanti, Princeton, all of N.J., assignors to Bristol-Myers Squibb Company, Princeton, N.J.

Filed Dec. 4, 1996, Ser. No. 760,237

Int. Cl.[6] A61K *31/40*

U.S. Cl. 514—410 5 Claims

1. A pharmaceutical formulation of BMY-25067 obtained from lyophilizing a solution comprising up to 4 mg of BMY-25067 per mL of 65% t-butanol/water, further comprising about 2% PVP (K-12 or K-17), optionally comprising one or more pharmaceutically acceptable carriers.

5,703,112
METHOD OF PREVENTING EMESIS USING TETRAHYDROBENZ [CD]INDOLE-6-CARBONXAMIDES

Mark M. Foreman, and J. David Leander, both of Indianapolis, Ind., assignors to Eli Lilly and Company, Indianapolis, Ind.

Continuation of Ser. No. 75,198, Jun. 10, 1993, abandoned. This application Nov. 17, 1995, Ser. No. 560,174

Int. Cl.[6] A61K *31/40;* **C07D** *209/90*

U.S. Cl. 514—411 9 Claims

1. A method of preventing emesis in mammals comprising administering to a mammal susceptible to or suffering from emesis an effective amount of a compound of the formula

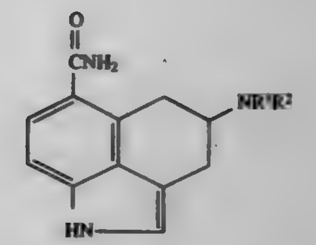

wherein:

R^1 is hydrogen, C_1–C_4 alkyl or allyl;

R^2 is hydrogen, C_1–C_4 alkyl or allyl; or a pharmaceutically acceptable acid addition salt thereof.

5,703,113
BENZOPYRAN DERIVATIVES

Tibor Eszenyi, Tiszalök; Péter Sebök; László Frank, both of Tiszavasvári; Gyula Papp, Szeged; Tibor Timár, Tiszavasvári, and Tamás Bartik, Veszprém, all of Hungary, assignors to Alkaloida Vegyeszeti Gyar, Tiszavasvari, Hungary

PCT No. PCT/HU93/00079, § 371 Date Nov. 8, 1995, § 102(e) Date Nov. 8, 1995, PCT Pub. No. WO94/14799, PCT Pub. Date Jul. 7, 1994

PCT Filed Dec. 20, 1993, Ser. No. 481,440

Claims priority, application Hungary, Dec. 19, 1992, P 92 04049

Int. Cl.[6] A61K *31/40;31/35;* **C07D** *407/04;309/10*

U.S. Cl. 514—422 17 Claims

1. A compound of the Formula (I)

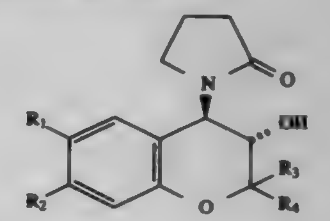

(I)

wherein

R_1 is C_1 to C_6 alkoxy, alkenyloxy, alkynyloxy, cycloalkoxy, aryloxy, aralkoxy, hydroxy, nitro, cyano, formyl, C_1 to C_6 acyl, cyano-C_1–C_6alkyl or halo;

R_2 is C_1 to C_6 alkoxy, alkenyloxy, alkynyloxy, cycloalkoxy, aryloxy, aralkoxy or hydroxy; or

R_1 and R_2 together are alkylenedioxy; and

R_3 and R_4 are each C_1 to C_6 alkyl.

5,703,114
USE OF 4,5-DICYANO-1-3-DITHIOLE-2-ONE (OR THIONE) AS ANTIMICROBIAL AND MARINE ANTIFOULING AGENTS

Ravi B. Shankar; Duane R. Romer, and R. Garth Pews, all of Midland, Mich., assignors to The Dow Chemical Company, Midland, Mich.

Filed Jul. 10, 1996, Ser. No. 676,661

Int. Cl.[6] A01N *43/00;43/26*

U.S. Cl. 514—441 5 Claims

3. A method for preventing the growth of marine organisms on a surface exposed to a marine environment in which marine organisms grow comprising contacting said surface with a paint composition containing an inert diluent and a vinyl resin binder, an epoxy binder or a polyurethane binder and a marine antifouling effective amount of a 4,5-dicyano-1,3-dithiole-2-one or thione compound corresponding to the formula:

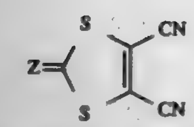
(I)

wherein Z is oxygen or sulfur as the active material.

5,703,115

[(BENZODIOXAN, BENZOFURAN OR BENZOPYRAN) ALKYLAMINO] ALKYL SUBSTITUTED GUANIDINES

Guy Rosalia Eugène Van Lommen, Berlaar; Marcel Frans Leopold De Bruyn, Hoogstraten, and Walter Jacobus Joseph Janssens, Beerse, all of Belgium, assignors to Janssen Pharmaceutica, N.V., Beerse, Belgium

Division of Ser. No. 256,995, Jul. 29, 1994, Pat. No. 5,541,180. This application Apr. 15, 1996, Ser. No. 632,230
Int. Cl.⁶ A61K *31/34;31/35;* **C07D** *307/81;311/58*
U.S. Cl. 514—456 **19 Claims**

1. A compound having the formula:

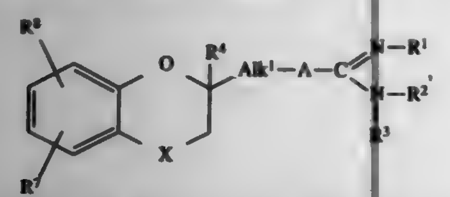
(I)

a pharmaceutically acceptable acid addition salt thereof, or a stereochemically isomeric form thereof, wherein:

X is CH_2 or a direct bond;
R^1 is hydrogen or C_{1-6}alkyl;
R^2 is hydrogen, C_{1-6}alkyl, C_{3-6}alkenyl or C_{3-6}alkynyl;
R^3 is hydrogen or C_{1-6}alkyl;
R^4 is hydrogen or C_{1-6}alkyl;
Alk^1 is a bivalent C_{1-3}alkanediyl radical;
A is a bivalent radical of the formula:

$$—N(R^5)—Alk^2—N(R^6)—$$

wherein:
R^5 and R^6 individually are hydrogen or C_{1-6}alkyl and Alk^2 is C_{2-5}alkanediyl or C_{5-7}cycloalkanediyl;
R^7 and R^8 each independently are hydrogen, halo, C_{1-6}alkyl, C_{3-6}alkenyl, C_{3-6}alkynyl, hydroxy, C_{1-6}alkyloxy, cyano, aminoC_{1-6}alkyl, carboxyl, C_{1-6}alkyloxycarbonyl, nitro, amino, aminocarbonyl, C_{1-6}alkylcarbonylamino, or mono- or di(C_{1-6}alkyl)amino;
provided that [2-[(2,3-dihydro-1,4-benzodioxin-2-yl)methyl]-amino]ethyl guanidine is excluded.

5,703,116

TELOMERASE INHIBITORS

Federico C. A. Gaeta, Foster City; Adam Antoni Galan, Richmond, and Elaine C. Stracker, Vacaville, all of Calif., assignors to Geron Corporation, Menlo Park, Calif.

Filed Apr. 18, 1995, Ser. No. 424,813
Int. Cl.⁶ A61K *31/38;* **C07D** *333/56*
U.S. Cl. 514—443 **22 Claims**

1. A telomerase inhibiting compound having the structure:

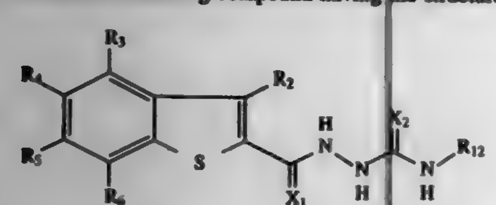

wherein
R_2 is hydrogen or halogen; R_3–R_6 are selected independently from the group consisting of hydrogen, halogen, hydroxyl, —NR_8R_9, nitro, cyano, alkoxyl, lower alkyl, aryl and aryloxyl, where R_8 and R_9 are selected independently from the group consisting of hydrogen, alkyl, aryl, aralkyl, heteroaryl, and heteroaralkyl; R_{12} is selected from the group consisting of hydrogen, alkyl, aryl, aralkyl, heteroaryl, and heteroaralkyl; and X_1 and X_2 are selected independently from the group consisting of oxygen and sulfur;
provided that when X_1 is oxygen, X_2 is sulfur, and R_2 is chloro: R_{12} is not methyl, phenyl, 4-methoxyphenyl or 4-chlorophenyl when R_3, R_4, and R_6, are hydrogen and R_5 is methoxy; and
R_{12} is not methyl, phenyl, 4-methoxyphenyl, 4-chlorophenyl, 4-methylphenyl, 2,5-dichlorophenyl, phenylmethyl, or unsubstituted allyl when R_3–R_6 are hydrogen.

5,703,117

HYDROLYSIS-PROMOTING HYDROPHOBIC TAXANE DERIVATIVES

Eric Mayhew; Shaukat Ali, both of Monmouth Junction, N.J., and Andrew S. Janoff, Yardley, Pa., assignors to The Liposome Company, Inc., Princeton, N.J.

Filed Sep. 12, 1996, Ser. No. 712,684
Int. Cl.⁶ A61K *31/335;* **C07D** *305/14*
U.S. Cl. 514—449 **25 Claims**

1. A taxane having the formula:

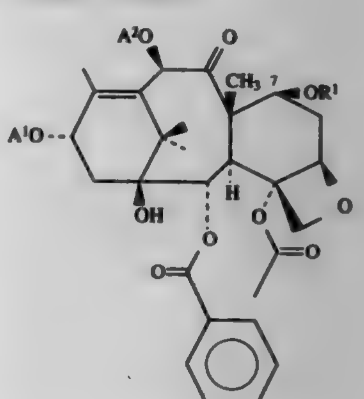

wherein:
A^1 is H or a group having the formula Z—C(O)NHCH(C_6H_5)CH(OR)— C(O)—, A^2 is H or CH_3C(O)— and;
Z is C_6H_5—, $C_6H_5CH_2$—O—, $C(CH_3)_3$—O— or $CH(CH_3)$=$C(CH_3)$—;
each of R and R^1 is H or a group having the formula Y^1Y^2, provided that at least one of R and R^1 is not H and provided that when A^3 is H, R^1 is not H;

y^1 is —O(O)OHX^1$(CH_2)_{n1}$$(CH{=}CH)_{n2}$$(CH_2)_{n3}$$(CH{=}CH)_{n4}$ $(CH_2)_{n5}$ $(CH{=}CH)_{n6}$$(CH_2)_{n7}$$(CH{=}CH)_{n8}$$(CH_2)_{n9}$—;
the sum of n1+2n2+n3+2n4+n5+2n6+ n7+2n8+n9 is an integer of from 1 to 21, each of n2, n4, n6 and n8 is independently zero or 1, n1 is zero or an integer of from 1 to 21, n3 is zero or an integer of from 1 to 18, n5 is zero or an integer of from 1 to 15, n7 is zero or an integer of from 1 to 12, n9 is zero or an integer of from 1 to 9 and each of n1 to n9 can be the same or different at each occurrence;
X^1 is an hydrolysis-promoting group; and
y^2 is —CH_3, —CO_2H or —CH_2OH.

5,703,118

USE OF BENZOPYRAN DERIVATIVES FOR THE TREATMENT OF PATHOLOGIES ASSOCIATED WITH THE NA⁺ -INDEPENDENT Cl-/HCO₃-EXCHANGER

Ludovic Durand, Cholet; Jean-Paul Babingui, Nantes; Claudie Moulin, Nantes; Sylvie Robert-Piessard, Nantes; Guillaume Le Baut, Saint Sebastien Sur Loire; Elisabeth Scalbert, Boulogne; Daniel-Henri Caignard, Paris, and Pierre Renard, Versailles, all of France, assignors to Adir et Compagnie, Courbevoie, France

Filed May 3, 1996, Ser. No. 643,257
Claims priority, application France, May 5, 1995, 95 05361
Int. Cl.⁶ A61K *31/35*
U.S. Cl. 514—456 **6 Claims**

1. A method of treating a gastric ulcer or osteroporosis disorder associated with the Na^+-independent Cl^-/HCO_3^- exchanger in a mammal comprising the step of administering to the said mammal an amount of a compound selected from the group consisting of those of formula (I):

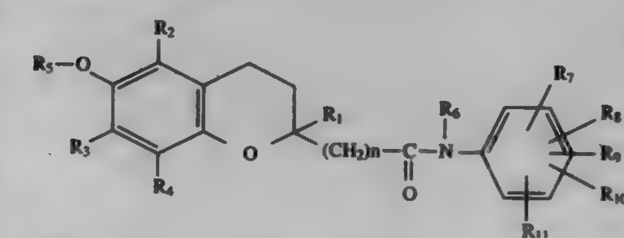
(I)

in which
n represents 0 or 1,
R_1, R_2, R_3 and R_4, which are identical or different, represent, independently of each other, hydrogen or alkyl;
R_5 represents hydrogen or a radical selected from the group consisting of alkyl, alkylcarbonyl, alkoxyalkyl, alkoxycarbonyl, alkoxycarbonylalkyl, and carboxyalkyl;
R_6 represents hydrogen or a radical selected from the group consisting of alkyl, phenyl, and phenylalkyl;
R_7, R_8 and R_9 represent, independently of each other, a radical selected from the group consisting of halogen, alkyl, alkyl substituted with halogen, alkoxy, hydroxyl, alkoxycarbonyl, and carboxyl;
and R_{10} and R_{11} represent, independently of each other, hydrogen or a radical selected from the group consisting of halogen, alkyl, alkyl substituted with halogen, alkoxy, hydroxyl, alkoxycarbonyl, and carboxyl;
enantiomers and diastereoisomers thereof and an addition salt thereof with a pharmaceutically-acceptable base,
it being understood that
the terms "alkyl" and "alkoxy" denote linear or branched groups of 1 to 8 carbon atoms;
which is effective for alleviating the said disorder.

5,703,119

BENZYLIDENE-LACTONE DERIVATIVES OF FENAMATES AND THEIR THIOCARBONYL ANALOGS AS INHIBITORS OF PROTEOGLYCAN DEGRADATION

Vijaykumar Baragi, Ann Arbor; Diane Harris Boschelli, Plymouth; David Thomas Connor, Ann Arbor, and Richard Raymond Renkiewicz, Novi, all of Mich., assignors to Warner-Lambert Company, Morris Plains, N.J.

Division of Ser. No. 273,668, Jul. 12, 1994, abandoned, which is a division of Ser. No. 97,356, Jul. 26, 1993, Pat. No. 5,358,964. This application May 24, 1995, Ser. No. 448,817
Int. Cl.⁶ C07D *309/30;* **A61K** *31/35*
U.S. Cl. 514—459 **7 Claims**

1. A compound of the formula

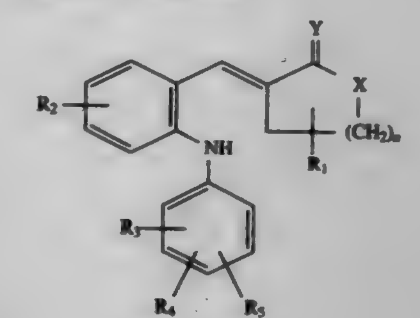
I

wherein
X is O;
Y is O or S;
R_1 is hydrogen or lower alkyl;
n is an integer of 2; and
R_2, R_3 , R_4, and R_5 are each independently hydrogen, halogen, trifluoromethyl, lower alkyl, CN, hydroxy, lower alkoxy, $S(O)_m$-lower alkyl, NO_2, or NR_6R_7 wherein R_6 and R_7 are each independently hydrogen, lower alkyl, lower alkanoyl or benzoyl, and m is an integer of 0, 1, or 2, or a pharmaceutically acceptable acid addition salt thereof.

5,703,120

Patent Not Issued For This Number

5,703,121

METHOD OF TREATING DISORDERS OF THE MELATONINERGIC SYSTEM AND A CERTAIN BENZOFURAN CONTAINING COMPOUND

Daniel Lesieur, Gondecourt; Eric Fourmaintraux, St Martin/Boulogne S/Mer; Patrick Depreux, Armentieres; Philippe Delagrange, Issy Les Moulineaux; Pierre Renard, Versailles, and Béatrice Guardiola-Lemaitre, Saind Cloud, all of France, assignors to Adir Et Compagnie, Courbevoie, France

Filed Jan. 11, 1996, Ser. No. 584,466
Claims priority, application France, Jan. 11, 1995, 95 00238
Int. Cl.⁶ A61K *31/34;* **C07D** *307/81*
U.S. Cl. 514—469 **9 Claims**

1. A method-of-treating a mammal afflicted with a disorder of the melatoninergic system comprising the step of administering to the said mammal an amount of a compound selected from the group consisting of those of formula (I):

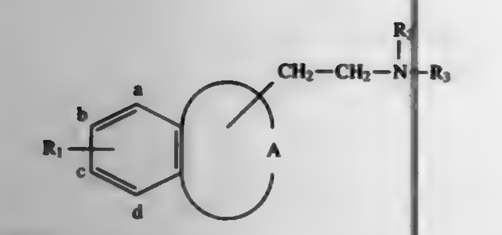

(I)

in which

R_1 represents alkyl,

A forms, with the benzene ring to which it is attached, a cyclic group selected from the group consisting of benzofuran and 2,3-dihydrobenzofuran,

R_2 represents hydrogen,

R_3 represents

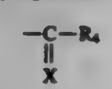

with X representing oxygen and R_4 representing alkyl, it being understood that, in the description of formula (I),

the term "alkyl" denotes a linear or branched group containing 1 to 6 carbon atoms, inclusive, and the enantiomers and diastereoisomers thereof, which is effective for alleviating the said disorder.

5,703,122

ASCORBIC ACID COMPOSITIONS FOR REDUCING IRRITATION OF TOPICALLY APPLIED ACTIVE INGREDIENTS

John A. Duffy, West Milford, N.J., assignor to Avon Products, Inc., Suffern, N.Y.

Division of Ser. No. 268,658, Jun. 29, 1994, Pat. No. 5,516,793, which is a continuation of Ser. No. 53,989, Apr. 26, 1993, abandoned. This application Feb. 6, 1996, Ser. No. 597,149

Int. Cl.[6] A61K *31/34*

U.S. Cl. 514—474 **12 Claims**

1. A dermatological composition which comprises an active ingredient selected from the group consisting of retinoids, salicylic acid, benzoyl peroxide, α-hydroxy acids, keto acids, hydroquinone and compatible mixtures thereof, in an amount effective for treating a skin condition, and

an ascorbic acid component selected from the group consisting of ascorbic acid, alkali ascorbates, alkali earth ascorbates, ascorbate esters, ascorbyl-phosphoryl-cholesterol, ascorbate anhydrides and compatible mixtures thereof, in an amount effective for reducing irritation induced by said active ingredient, said active ingredient and said ascorbic acid component being admixed in a cosmetically or pharmaceutically acceptable vehicle.

5,703,123

METHOD FOR CAUSING A PHYSIOLOGICAL COOLING EFFECT TO THE SKIN OR MUCOSA INVOLVING THE APPLICATION OF CARBONIC ACID ESTERS

Ralf Pelzer, Fuerstenberg; Horst Surburg, and Rudolf Hopp, both of Holzminden, all of Germany, assignors to Haarmann & Reimer GmbH, Holzminden, Germany

Continuation of Ser. No. 319,349, Oct. 6, 1994, abandoned, which is a division of Ser. No. 99,786, Jul. 30, 1993, abandoned. This application Jul. 31, 1995, Ser. No. 509,443

Claims priority, application Germany, Aug. 6, 1992, 42 26 043.4

Int. Cl.[6] A61K *31/265*

U.S. Cl. 514—512 **5 Claims**

1. A method for causing a physiological cooling effect to the skin or mucosa, which comprises applying to the skin or mucosa at least one compound of the formula

$$\left[R^1-Z-\underset{\underset{O}{\|}}{C}-X- \right]_m R^2(-Y)_n \qquad (I)$$

wherein

R^1 denotes C_4–C_{20}-alkyl, C_5–C_{20}-cycloalkyl or -heterocycloalkyl or C_5–C_{20}-alkoxy, C_6–C_{12}-aryl, C_5–C_{10}-heteroaryl or C_7–C_{11}-aralkyl,

R^2 denotes an m+w·n-valent aliphatic C_1–C_8 radical, a cycloaliphatic or heterocycloaliphatic C_3–C_{15} radical or an araliphatic C_7–C_{20} radical or an alkoxy- or acyloxy-containing aliphatic C_3–C_{15} radical,

Z and X each denote —O—,

Y denotes hydroxyl, C_1–C_{10}-alkoxy, C_2–C_6-acyloxy, amino, mercapto or —O—R^3—O—,

R^3 denotes C_1–C_6-alkylene,

w denotes The valency of the radical Y and

m and n independently of one another denote integers from 1 to 8, with the proviso that the sum of m+n is not more than 12.

5,703,124

COMPOSITION CONTAINING ALLYL ISOTHIOCYANATE AND ITS USE

Asami Takata; Shoko Numata; Yuichi Mizukami; Yasushi Sekiyama, all of Osaka, and Masato Takahashi, Fujinomiya, all of Japan, assignors to The Green Cross Corporation, Osaka, Japan

Continuation of Ser. No. 22,099, Feb. 25, 1993, abandoned. This application Mar. 14, 1995, Ser. No. 404,123

Claims priority, application Japan, Feb. 26, 1992, 4-076116; May 26, 1992, 4-133883; Nov. 2, 1992, 4-294578

Int. Cl.[6] A01N *47/40;47/46*

U.S. Cl. 514—514 **23 Claims**

1. A water-soluble antimicrobial composition in the form of a liquid, a powder, a granule or a tablet, comprising 1 part by weight of allyl isothiocyanate, 1–100 parts by weight of a polyhydric alcohol optionally having an aldehyde group or a ketone group, and 0.05–1 part by weight of a surfactant having an HLB of 1–20 and comprising a glycerol, sorbitan or sucrose fatty acid ester.

5,703,125

SUBSTITUTED β-AMINO ACID DERIVATIVES USEFUL AS PLATELET AGGREGATION INHIBITORS

Philippe R. Bovy; Joseph G. Rice; Thomas E. Rogers, all of Ballwin; Foe S. Tjoeng, Manchester, all of Mo., and Jeffery A. Zablocki, Skokie, Ill., assignors to G. D. Searle & Co., Chicago, Ill., and The Monsanto Company, St. Louis, Mo.

Division of Ser. No. 221,913, Apr. 1, 1994, abandoned, which is a division of Ser. No. 953,601, Oct. 6, 1992, Pat. No. 5,344,957, which is a continuation-in-part of Ser. No. 866,933, Apr. 10, 1992, Pat. No. 5,239,113, which is a continuation-in-part of Ser. No. 777,811, Oct. 15, 1991, abandoned. This application May 31, 1995, Ser. No. 455,612

Int. Cl.[6] A01N *37/22*

U.S. Cl. 514—539 **10 Claims**

1. A substituted β amino acid derivative or a pharmaceutically acceptable salt thereof having the formula:

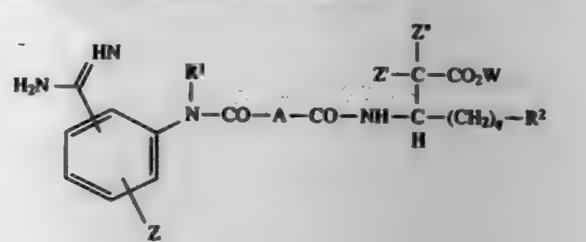

wherein R^1 is selected from the group consisting of hydrogen, lower alkyl radicals, lower alkenyl radicals, aromatic hydrocarbon radicals, alicyclic hydrocarbon radicals, benzyl radicals, phenethyl radicals, wherein said radicals are optionally substituted with halogen, lower alkoxy, hydroxy and lower alkyl;

R^2 is an aromatic hydrocarbon radical, wherein said radical is optionally substituted with hydroxy, lower alkoxy, lower alkyl, halogen, nitro, cyano, azido, ureido, ureylene, carboxyl or carbonyl derivatives, trifluoromethyl, acyloxy, alkylthio, arylthio, alkylsulfinyl, arylsulfinyl, alkylsulfonyl, arylsulfonyl, amino, alkylamino, trialkylsilyl, aminosulfonyl, dialkylamino, alkanoylamino, aroylamino, phenyl, naphthyl, or lower alkynyl which are optionally substituted with one or more of the following: halogen, nitro, lower alkoxy, lower alkyl, trialkylsilyl, azide and phenyl;

A is selected from the group consisting of ethylene, lower alkenylene radicals, lower alkynylene radicals, and divalent alicyclic radicals, wherein said radicals are optionally substituted with hydroxyl, lower alkoxy, lower alkyl, halogen, alkoxycarbonylalkyl, amino, alkylamino, dialkylamino, acylamino, alkylthio, sulfonyl, and aromatic hydrocarbons which are optionally substituted with halogen, nitro, lower alkoxy and lower alkyl;

W is selected from the group consisting of hydrogen, lower alkyl radicals, lower alkenyl radicals, lower alkynyl radicals, alicyclic hydrocarbon radicals and aromatic hydrocarbon radicals, wherein said radicals are optionally substituted with hydroxyl, lower alkoxy, lower alkyl, halogen, nitro, amino, acyloxy, phenyl and naphthyl which may be optionally substituted with halogen, nitro, lower alkoxy, and lower alkyl;

Z, Z', Z" are independently selected from the group consisting of hydrogen, lower alkyl radicals, halogen, alkoxy, cyano, sulfonyl, carboxyl, alkoxycarbonyl, and hydroxyl radicals;

q is an integer from 0 to about 6; and

with the proviso that when A is trimethylene and q is 0 then R_2 is not a phenyl radical.

5,703,126

AMPHIPHILIC FLUORINE DERIVATIVES WITH TELOMERIC STRUCTURES

Andre A. Pavia, Villeneuve-les-Avignon; Bernard Pucci, Molleges; Jean G. Riess, Falicon, and Leila Zarif, Nice, all of France, assignors to Alliance Pharmaceutical Corp., San Diego, Calif.

Division of Ser. No. 238,970, May 5, 1994, Pat. No. 5,527,962, which is a continuation of Ser. No. 741,749, Aug. 7, 1991, abandoned. This application Jun. 5, 1995, Ser. No. 465,412

Claims priority, application France, Aug. 9, 1990, 90/10206

Int. Cl.[6] A61K *31/195*

U.S. Cl. 514—562 **13 Claims**

1. A formulation comprising

a physiologically acceptable carrier; and

a compound of the formula

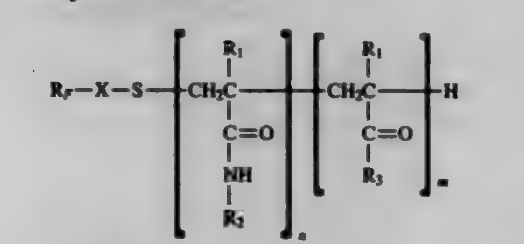

(I)

wherein

R_F is a C_2–C_{18} fluorinated radical;

X is an C_1–C_{24} alkylene or fluoroalkylene group, linear or branched, having at least one substituent independently selected from the group consisting of —CON(R')—, —SO_2N(R')—, —S—, —O— or —N(R')— wherein R' is H or a C_1 to C_6 alkyl or fluoroalkyl radical; and when X is branched, a part of X can be R_F;

R^1 is H or CH_3;

R^2 is selected from the group consisting of the radicals $(CH_2)_p$—$C(CH_2OH)_3$, wherein p=0 to 3; Z-R_4, wherein Z is a monovalent or bivalent radical selected from the group consisting of —NH—, —$(CH_2)_r$—N—(R^1)—, —$(CH_2)_r$—O—, or $(CH_2)_r$—S—, wherein r=2 to 4, and R^1 is as defined above; and

R^4 is a monovalent radical derived from an ose, an oside or an amine derivative thereof;

R^3 is an aminoacid residue obtained by removal of a hydrogen atom from the NH_2 group thereof; and

n=1 to 50, provided that R^2 is $(CH_2)_p$—$C(CH_2OH)_3$ when n=1; and

m=0 or 1 to 200, provided that $0.2 \leq n/n+m \leq 1$.

5,703,127

COMPOSITION, DOSAGE UNIT, AND METHOD FOR TREATING STOMACH DISORDERS

Kyoungsik Pak, 371 Sweetbriar Rd., King of Prussia, Pa. 19406

Filed Jan. 25, 1996, Ser. No. 591,889

Int. Cl.[6] A61K *31/205;31/195*

U.S. Cl. 514—562 **15 Claims**

1. A composition for treating discomfort caused by heartburn, stomach pain, gastritis, reflux, or hyperacidity, consisting essentially of

L- or DL-Methionine, and

means for sweetening and for reducing the frequency and severity of undesirable side effects of the L- or DL-Methionine,

wherein said means is a sweetener,

wherein the L- or DL-Methionine is present in a range of about 25% to about 50% by weight of the composition,

wherein the sweetener is present in a range of about 50% to about 75% by weight of the composition, and

wherein the sweetener is fructose, dextrose, or sucrose.

5,703,128

ANTI-OSTEOPATHIC COMPOSITION

Koichi Shudo, Tokyo; Tatsuo Sugioka, Iruma-gun; Mizuho Inazu, Iruma; Hideyuki Tanaka, Kawagoe; Tsutomu Inoue, Hidaka, and Kazuyuki Kitamura, Sakado, all of Japan, assignors to Hoechst Japan Limited, and Koichi Shudo, both of Tokyo, Japan

Division of Ser. No. 221,600, Apr. 1, 1994, Pat. No. 5,525,618. This application Mar. 8, 1996, Ser. No. 613,265

Claims priority, application Japan, Apr. 5, 1993, 78320

Int. Cl.[6] A61K *31/44;31/195*

U.S. Cl. 514—563 **2 Claims**

1. An anti-osteopathic composition for the treatment of a bone disease, said anti-osteopathic composition comprising as an active ingredient a compound or a pharmaceutically acceptable salt of a compound selected from:

4-[(3-isopropyl-4-isopropoxy-phenyl) carboxamide]benzoic acid (Am 685) or

3-hydroxy-4-[(3-isopropyl-4-isopropoxyphenyl) carboxamide]benzoic acid (Am 689).

5,703,129

5-AMINO-6-CYCLOHEXYL-4-HYDROXY-HEXANAMIDE DERIVATIVES AS INHIBITORS OF β-AMYLOID PROTEIN PRODUCTION

Kevin Felsenstein; David W. Smith, both of Madison, Conn.; Michael A. Poss, Lawrenceville, N.J.; Prasad Chaturvedula, Cheshire, and Charles P. Sloan, Wallingford, both of Conn., assignors to Bristol-Myers Squibb Company, New York, N.Y.

Filed Sep. 30, 1996, Ser. No. 723,488

Int. Cl.[6] A61K *31/17*

U.S. Cl. 514—613 **9 Claims**

1. A compound of Formula I and its pharmaceutically

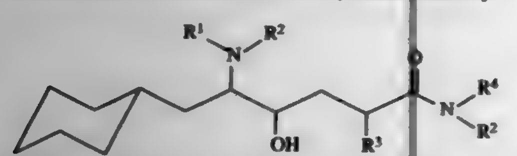
(I)

acceptable acid addition salts and hydrates thereof wherein

R^1 is selected from C_{4-8} alkyl, C_{4-8} alkenyl, C_{1-4} alkoxy-C_{1-4} alkanediyl, R^5-substituted C_{3-6} cycloalkyl, R^5-substituted C_{3-6} cycloalkyl-lower-alkanediyl, and Ar—$(CH_2)_n$— in which Ar is

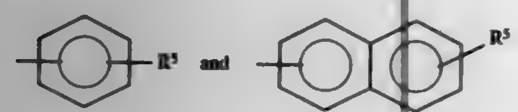

with R^5 being hydrogen, lower (C_{1-6}) alkyl, and lower alkoxy, and n is 1 to 4;

R^2 is independently selected from hydrogen and methyl;

R^3 is selected from lower alkyl, C_{3-6} cycloalkyl, C_{3-6} cycloalkyl-lower-alkanediyl, C_{3-6} alkenyl, and Ar—$(CH_2)_n$—; and

R^4 is selected from R^3, lower alkyl-thio-lower alkyl, and

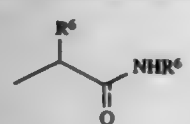

wherein R^6 is lower alkyl.

7. A method for inhibiting γ-secretase comprising the administration to a host of an effective γ-secretase inhibiting amount of a claim 1 compound.

5,703,130

CHALCONE RETINOIDS AND METHODS OF USE OF SAME

Rui Han, and Zong-Ru Guo, both of Beijing, China, assignors to Institute of Materia Medica, an Institute of the Chinese Academy of Medical Sciences, Beijing, China

Filed Jun. 7, 1996, Ser. No. 657,886

Int. Cl.[6] A61K *31/16;* **C07C** *233/65*

U.S. Cl. 514—616 **5 Claims**

1. A compound according to formula (I):

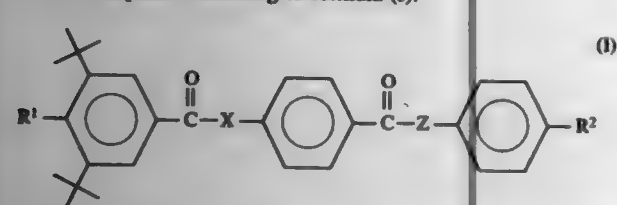
(I)

wherein R^1=OH or C_1–C_5 alkoxy; R^2=OH, carboxy, C_1–C_5 alkyl ester or $NHCOR^3$ where R^3=methyl, ethyl, propyl, or butyl; X=NH or C_2–C_4 alkenyl; and Z=NH or O.

5,703,131

METHOD FOR THE DETOXIFICATION OF MUSTARD GAS SULFUR-CONTAINING QUATERNARY AMMONIUM IONENE POLYMERS AND THEIR USE AS MICROBICIDES

Wallace E. Puckett; Mark L. Zollinger, and Fernando Del Corral, all of Memphis, Tenn., assignors to Buckman Laboratories International Inc., Membis, Tenn.

Continuation of Ser. No. 359,732, Dec. 20, 1994, abandoned, which is a division of Ser. No. 993,079, Dec. 18, 1992, Pat. No. 5,387,717, which is a continuation-in-part of Ser. No. 928,356, Aug. 12, 1992, Pat. No. 5,401,881. This application Sep. 18, 1995, Ser. No. 529,711

Int. Cl.[6] A01N *33/12;* **C07C** *211/63;215/40;209/12*

U.S. Cl. 514—642 **3 Claims**

1. A microbicidal composition comprising an aqueous solution containing a sulfur-containing quaternary ammonium ionene polymer comprising a repeating unit of formula II:

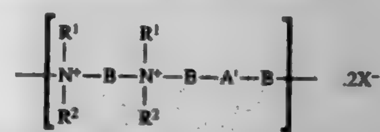
(II)

wherein X^- is a counter-ion; R^1 and R^2, which can be the same or different, are selected from a lower alkyl group and —CH_2—CH_2—OH; A' is a radical selected from —S—, —S—CH_2CH_2—S—, —S—S— and the oxidation products of —S—, of —S—CH_2CH_2—S— and of —S—S—; and B is a radical selected from C_1–C_5 alkyl, —CH_2—CH(OH)—CH_2—, and —$(CH_2)_m$—O—$(CH_2)_m$—, where each m is independently 1, 2, or 3, wherein said sulfur-containing quaternary ammonium ionene polymer has a molecular weight of from 1,000 to 3,000, and wherein said sulfur-containing quaternary ammonium ionene polymer is present in an amount of from 0.05 ppm to 1,000 ppm in said aqueous solution.

5,703,132

SYNERGISTIC COMBINATIONS OF AMMONIUM SALTS

Alfons Sagenmüller, Kelsterbach, Germany; Hans-Herbert Schubert, Tokyo, Japan; Shigeru Uzawa, Chiba, Japan, and Kenichi Saito, Mobara, Japan, assignors to Hoechst Schering AgrEvo GmbH, Berlin, Germany

Division of Ser. No. 374,309, Jan. 18, 1995. This application Nov. 21, 1996, Ser. No. 752,582

Claims priority, application Germany, Jan. 20, 1994, P 44 01542.9

Int. Cl.[6] A01N *31/14;33/12*

U.S. Cl. 514—643 **8 Claims**

1. An insecticidal composition comprising synergistic insecticidally effective amounts of C_{10}–C_{18} alkyl benzyl dimethyl ammonium chloride, in combination with at least one compound selected from the group consisting of

C) MTI-732 (formula III),

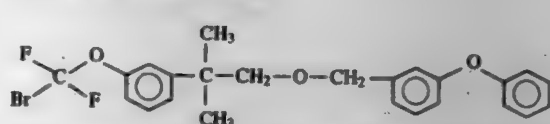
(III)

E) ethofenprox (Trebon, MTI-500, (2-(4-ethoxyphenyl) -2-methylpropyl 3-phenoxybenzyl ether, formula V),

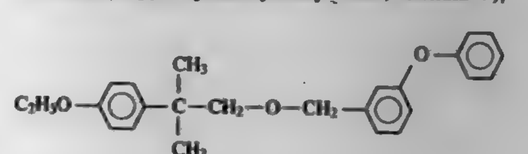
(V)

F) PP 682 (ICI-A5682, formula VI),

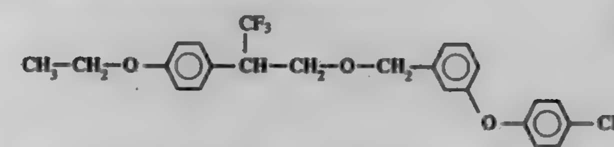
(VI)

wherein the compounds C), E) and F) and the ammonium salt are present in a ratio by weight of 20:1 to 1:10,000.

5,703,133

ISOALCOHOL SYNTHESIS

Thomas Henry Vanderspurt, Delaware Township, N.J., and Russell John Koveal, Baton Rouge, La., assignors to Exxon Research and Engineering Company, Florham Park, N.J.

Filed Dec. 8, 1995, Ser. No. 569,532

Int. Cl.[6] C07C *27/20*

U.S. Cl. 518—707 **3 Claims**

1. A method for producing isobutanol and methyl butanols from syngas, comprising: (a) contacting a reactant stream containing syngas with a first stage catalyst having alkali promoted, La-stabilized, highly dispersed microcrystalline Cu_2O having a particle size of ≦6 nm interspersed with metallic copper crystallites having a particle size of ≦25 nm, and zinc oxide crystallites having a particle size of ≦6 nm in the presence of an alumina structural promoter, wherein on a mole % alkali free metals only basis, Cu is present in from about 45% to about 55%, Zn from about 10% to about 20%, Al from about 10% to about 25%, La from about 5% to about 15% and wherein the alkali is between about 0% to about 1% K and from about 3% to about 6.5% Cs, wherein the first stage catalyst is produced by the process of

coprecipitating at a constant pH of from 7.0 to 11.0 at a temperature of from about 30° C. to about 100° C. in the essential absence of CO_2 from a solution of soluble metal salts of copper, zinc, lanthanum and aluminum with alkali hydroxide solution selected from the group consisting of LiOH, NaOH, KOH, CsOH and RbOH and mixtures hereof;

aging the washed precipitate for from about 1 to 24 hours at from 50° C. to 90° C. in the essential absence of CO_2;

washing the coprecipitate in the essential absence of CO_2;

drying the washed coprecipitate in air at up to about 120° C.;

calcining the dried coprecipitate in air for greater than 3 hours at a temperature of from about 300° C. to 700° C.;

contacting the calcined coprecipitate with from 0.01% to 0.91% K and 3% to 6.5% Cs to form a promoted catalyst;

drying the promoted catalyst at up to 120° C.;

recalcining the promoted catalyst at from about 300° C. to 700° C. to produce a catalyst precursor containing highly dispersed CuO crystallites of up to about 10 nm; activating the promoted catalyst in flowing hydrogen for at least 1 hour at 175° C. to 185° C. then for at least 1 hour 250° C. to 270° C.;

wherein said contacting of reactant stream and first stage catalyst is carried out at a pressure of from about 850 psi (5,840 kPa) to about 1500 psi (10,310 kPa) a temperature of from about 240° C. to about 340° C. for a time sufficient to produce a product stream containing methanol, ethanol, propanol and methyl butanols; (b) contacting methanol, ethanol, and propanol from step (a) with a second stage catalyst having at least a first phase of mixed oxide cystallite containing from about 60 to 74 atomic % zirconium, from about 21 to 31 atomic % manganese and from about 5 to 9 atomic % zinc, and less than about 1 atomic % alkali, a second phase of zirconium doped hetaerolite containing from about 65 to 69 atomic % manganese, about 31 to 35 atomic % zinc, 0.5 to 5 atomic % zirconium, and optionally a trace atomic % alkali, and a third phase containing from about 20 to 55 atomic % manganese, from about 13 to 55% atomic zinc and 13 to 35 atomic % zirconium wherein the first phase mixed oxide crystallites have a zirconium oxide like structure have a particle size of at least about 40 Å to about 100 Å, the second phase of at least about 200 Å to greater than about 2000 Å and the third phase of at least about 1000 Å to greater than 400 Å at a pressure of from about 850 psi to about 1500 psi (10,300 kPa) a temperature of from about 340° C. to about 380° C. to produce additional isobutanol and methyl butanols from the methanol, ethanol and propanol and trace ethylene and propylene.

5,703,134

COPOLYMERS OF RECYCLED POLYESTER

Jawed Asrar, and A. Hameed Bhombal, both of Chesterfield, Mo., assignors to Monsanto Company, St. Louis, Mo.

Continuation of Ser. No. 427,639, Apr. 21, 1995, abandoned, which is a continuation of Ser. No. 209,809, Mar. 11, 1994, abandoned. This application Dec. 10, 1996, Ser. No. 762,722

Int. Cl.[6] C08J *11/04;* **C08L** *67/02*

U.S. Cl. 521—48 **4 Claims**

1. A process for producing a copolyester of recycled polyethylene terephthalate and a dicarboxylate moiety comprising:

a) heating unmodified recycled polyethylene terephthalate and a dicarboxylate moiety in a reactor to a temperature within the range of from about 273° C. to about 293° C. for a period of from about 1 hour to about 3 hours; and

b) reducing the pressure to a pressure of from about 0.5 to about 1.0 mm mercury.

5,703,135

PRODUCTION OF EXPANDED POLYOLEFIN BEADS

Jürgen Schweinzer, Frankenthal; Joachim Fischer, Grosskarlbach; Isidoor De Grave, Wachenheim, and Wolfram Kögel, Mannheim, all of Germany, assignors to BASF Aktiengesellschaft, Ludwigshafen, Germany

PCT No. PCT/EP95/03190, § 371 Date Feb. 24, 1997, § 102(e) Date Feb. 24, 1997, PCT Pub. No. WO96/06129, PCT Pub. Date Feb. 29, 1996

PCT Filed Aug. 11, 1995, Ser. No. 793,101

Claims priority, application Germany, Aug. 23, 1994, 44 29 844.7

Int. Cl.[6] C08J *9/18*

U.S. Cl. 521—60 **7 Claims**

1. A process for the production of expanded polyolefin beads by impregnating polyolefin particles with volatile blowing agents at a temperature at most 50° C. below and at most 30° C. above the crystallite melting point of the polyolefin, the crystallite melting point being the maximum of the DSC curve obtained by heating from 3 to 6 mg of the polyolefin granules to 220° C. at a heating rate of 20° C./min, by means of a differential calorimeter, which comprises fluidizing particulate propylene or ethylene polymers under pressure in a fluidized bed and at the same time impregnating them with a blowing agent which is gaseous at the selected temperature, and expanding the impregnated polyolefin particles by decompression.

5,703,136

POLYMERIC FOAMS

Herbert Russell Gillis, West Deptford, N.J.; Dirk Stanssens, Lanaken; Erik De Vos, [illegible], both of Belgium; Aaldrik Roelf Postema, Loosdrecht, Netherlands, and David Randall, Everberg, Belgium, assignors to Imperial Chemical Industries plc, London, England

Continuation-in-part of Ser. No. 830,002, Feb. 4, 1992, abandoned. This application Mar. 19, 1993, Ser. No. 34,921

Claims priority, application United Kingdom, Feb. 4, 1991, 9102362

Int. Cl.[6] C08J *9/14;9/04;* **C08K** *5/01;5/02*

U.S. Cl. 521—128 **8 Claims**

1. A method for the preparation of rigid foams by reacting an organic polyisocyanate with an isocyanate-reactive material, characterized in that the isocyanate-reactive material comprises at least one isocyanate-reactive cyclic blowing promoter of the formula:

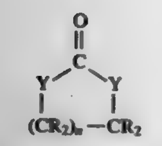

(1)

wherein Y is —O— or —NR^1—;

wherein each R^1, independently is a lower alkyl radical of C_1–C_6, or a lower alkyl radical substituted with an isocyanate-reactive group;

wherein each R, independently is H, a lower alkyl radical of C_1–C_6, or —$(CH_2)_m$— X wherein X is an isocyanate-reactive group which is OH or NH_2, and m is 0, 1 or 2; and wherein n is 1 or 2 with the proviso that at least one of R^1 or R is or comprises an isocyanate-reactive group, the reaction being performed in the presence of an inert insoluble organic liquid which is present as the dispersed phase of an emulsion or a microemulsion and in the presence of a metal salt catalyst, wherein said inert insoluble organic liquid is selected from the group consisting of fluorinated compounds, aliphatic hydrocarbons, cycloalipahtic hydrocarbons and aromatic hydrocarbons.

5,703,137

INITIATORS FOR THE CATIONIC CROSSLINKING OF POLYMERS CONTAINING ORGANOFUNCTIONAL GROUPS

Christian Priou, Villeurbanne, France, and Stuart Kerr, III, Rock Hill, S.C., assignors to Rhone-Poulenc Chimie, Courbevoie Cedex, France

Filed Mar. 14, 1996, Ser. No. 616,170

Int. Cl.⁶ C08L *83/06;* **C08F** *2/50*

U.S. Cl. 522—25 **16 Claims**

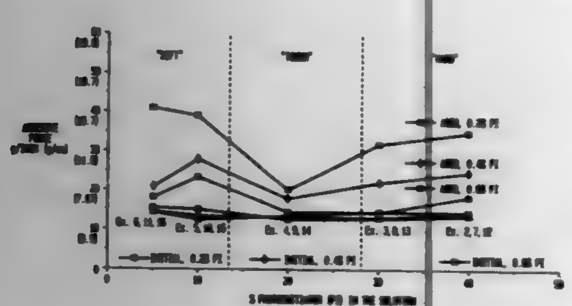

1. A composition useful for polymerizing or cationically crosslinking one or more monomers containing epoxide or vinyl ether organofunctional groups as a result of exposure to photochemical activation, thermal activation or electron beam radiation comprising:

(a) a catalytically effective amount of either an onium borate salt of an element selected from the group consisting of I, S, Se, P and N, or an oxoisothiochromanium salt; and

(b) an accelerator comprising a compound of formula (I)

$$R^1—\underset{|}{\overset{OH}{CH}}—CO—O—R^2 \qquad (I)$$

wherein R^1 is selected from the group consisting of:

a linear or branched C_1–C_{10} alkyl radical, optionally substituted with a linear or branched C_1–C_4 alkoxy group;

a C_4–C_{10} cycloalkyl radical, optionally substituted with one or more linear or branched C_1–C_4 alkyl or alkoxy groups;

a C_5–C_{12} aryl radical, optionally substituted with one or more linear or branched C_1–C_4 alkyl or alkoxy groups;

an aralkyl or aroxyalkyl radical in which the aryl part of the radical is a C_5–C_{12} group optionally substituted with one or more linear or branched C_1–C_4 alkyl or alkoxy groups, wherein the alkyl part of the radical is a linear or branched C_1–C_4 group;

a linear or branched C_1–C_{15} alkoxy radical; and

a C_4–C_{10} cycloalkyloxy radical, optionally substituted with one or more linear or branched C_1–C_4 alkyl or alkoxy groups; and

wherein R^2 is selected from the group consisting of:

a linear or branched C_1–C_{10} alkyl radical, optionally substituted with a linear or branched C_1–C_4 alkoxy group;

a C_4–C_{10} cycloalkyl radical, optionally substituted with one or more linear or branched C_1–C_4 alkyl or alkoxy groups;

a C_5–C_{12} aryl radical, optionally substituted with one or more linear or branched C_1–C_4 alkyl or alkoxy groups; and

an aralkyl or aroxyalkyl radical in which the aryl part is a C_5–C_{12} group optionally substituted with one or more linear or branched C_1–C_4 alkyl or alkoxy groups, wherein the alkyl part or the radical is a linear or branched C_1–C_4 group.

5,703,138

OXYGEN-CURABLE COATING COMPOSITION

Stephen E. Cantor, Cheshire, and Leon Levine, West Hartford, both of Conn., assignors to Dymax Corporation, Torrington, Conn.

Continuation-in-part of Ser. No. 437,842, May 9, 1995, abandoned, which is a continuation-in-part of Ser. No. 328,965, Oct. 24, 1994, abandoned, which is a continuation of Ser. No. 180,370, Jan. 12, 1994, abandoned. This application Jul. 24, 1996, Ser. No. 685,492

Int. Cl.⁶ C08F *2/46;* **B05D** *5/12;* **B32B** *7/02*

U.S. Cl. 522—29 **19 Claims**

1. A liquid coating composition comprising, on a weight basis, 15 to 60 parts of a free-radical reactive acrylate monomer constituted of less than about 20 weight percent polyfunctional molecules; 5 to 25 parts of an air-curing polyether-ene polymer containing at least three activated double bonds per molecule; a catalytic amount of photoinitiator; and a catalytic amount of a dissolved transition metal ion, said composition being free from acrylated carbonate polymers, added active oxygen catalytic compounds, oxygen-reaction inhibitors, and inert solvents.

5,703,139

PHOTO-CURABLE RESIN COMPOSITION AND PRODUCT COATED THEREWITH

Sang-Keun Kim; Seoung-Ho Kim; Haeng-Woo Lee; Cheol-Kyu Choi, all of Yousung-Ku; Joong-Deuk Kim, Kangnam-Ku; Jin-Who Hong; Chang-Soo Kim, both of Bundang-gu, and Kong-Hyun Whang, Kangnam-gu, all of Rep. of Korea, assignors to HANWHA Chemical Corporation, Seoul, Rep. of Korea

Filed Sep. 27, 1995, Ser. No. 534,719

Claims priority, application Rep. of Korea, Sep. 27, 1994, 94-24336

Int. Cl.⁶ C08F *2/46*

U.S. Cl. 522—42 **13 Claims**

1. A photo-curable resin composition comprising a prepolymer having the following formula (I):

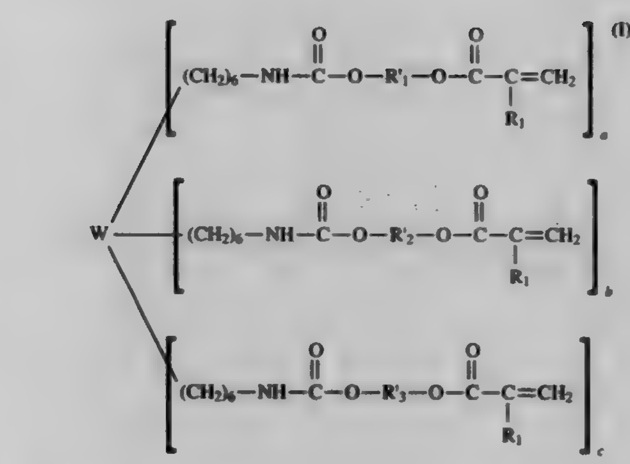

in which

W represents

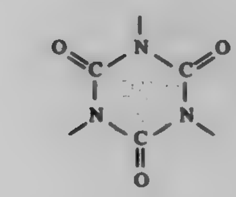

R_1 represents hydrogen or methyl;

R_1' represents

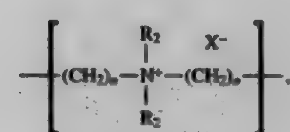

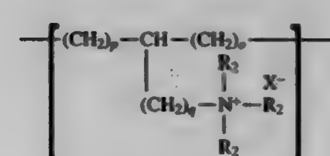

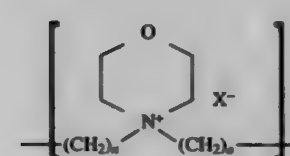

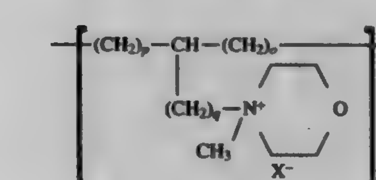

wherein X represents a chlorine or bromine atom, R_2 represents methyl or ethyl, n, o and q independently of one another denote an integer of 1 to 6 and p denotes an integer of 0 to 6;

R_2' and R_3' are identical to or different from each other and represent

$—CH_2—\underset{\underset{CH_3}{|}}{CH}—,$

$—CH_2—CH_2—CH_2—CH_2—,$

$—CH_2—CH_2—(OCH_2CH_2)_L—$

wherein L denotes an integer of 0 to 5, or

$$—CH_2—CH_2—\left[O—\overset{\overset{O}{\|}}{C}—(CH_2)_5\right]_m—$$

wherein m denotes an integer of 1 to 6;

a, b and c independently of one another represent a real number of 3 or less, provided that they satisfy the conditions of 0<a≦3, 0≦b<3 and 0≦c<3 and a+b+c=3.

5,703,140

PHOTOPOLYMERIZABLE COMPOSITION

Kazuto Kunita, and Syunichi Kondo, both of Shizuoka, Japan, assignors to Fuji Photo Film Co., Ltd., Minami Ashigara, Japan

Filed Jan. 23, 1996, Ser. No. 589,992

Claims priority, application Japan, Jan. 30, 1995, 7-13108

Int. Cl.⁶ G03F *7/028;* **C08F** *2/50*

U.S. Cl. 522—57 **3 Claims**

1. A photopolymerizable composition comprising at least the following components (i) and (ii):

(i) a compound having an addition-polymerizable ethylenically unsaturated bond, and

(ii) an oxime ether compound, further comprising a photopolymerization initiator and a spectral sensitizing dye or dyestuff.

5,703,141

UV CURABLE COATINGS

Peiwen Jin, Washingtonville, N.Y., assignor to Tarkett AG, Frankenthal, Germany

Filed Sep. 25, 1995, Ser. No. 533,538

Int. Cl.⁶ C08F *2/46*

U.S. Cl. 522—97 **30 Claims**

1. A UV curable composition having a low viscosity and useful in the preparation of coatings having high tensile strength, high elongation and high gloss retention, prepared by reacting a caprolactone adduct and an isocyanate in a first reaction, wherein the product of said first reaction is further reacted with a hydroxyalkyl acrylate or methacrylate and an additional caprolactone adduct component, while the ratio of said acrylate or methacrylate to caprolactone adduct is adjusted in order to vary the hardness and flexibility of the composition as desired.

5,703,142

PHOTO-CURABLE PREPOLYMER COMPRISING QUATERNARY AMMONIUM SALT AND PROCESS FOR PREPARING THEREOF

Sang-Keun Kim; Haeng-Woo Lee; Cheol-Kyu Choi, all of Yousung-Ku; Jeong-Deuk Kim, Seoul; Jin-Who Hong; Chang-Soo Kim, both of Kyonggi-do, and Kong-Hyun Whang, Seoul, all of Rep. of Korea, assignors to Hanwha Chemical Corporation, Seoul, Rep. of Korea

Filed Sep. 27, 1995, Ser. No. 534,713

Claims priority, application Rep. of Korea, Sep. 27, 1994, 94-24337

Int. Cl.[6] C08F *2/46*

U.S. Cl. 522—90 6 Claims

1. A photo-curable prepolymer having the following formula (I)

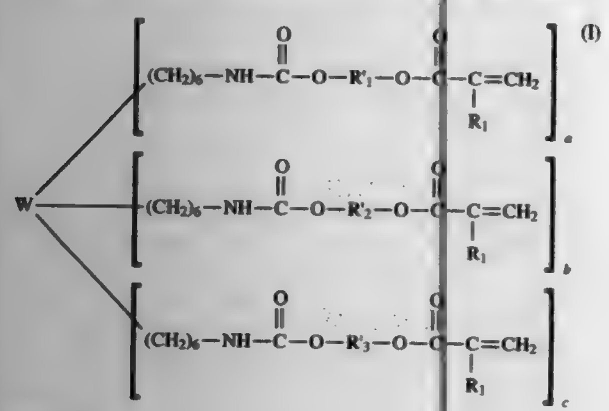

in which

W represents

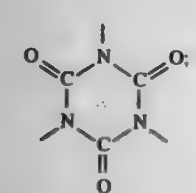

R_1 represents hydrogen or methyl;

R_1' represents

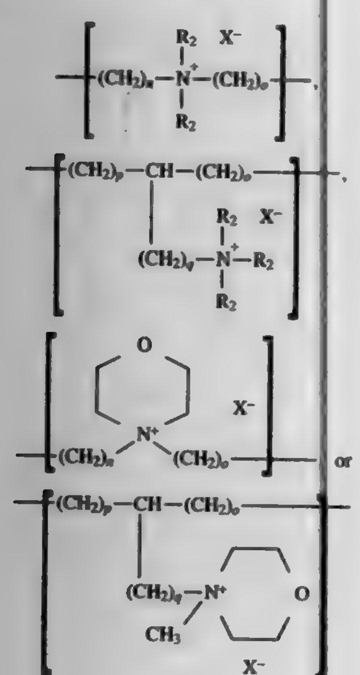

wherein X represents a chlorine or bromine atom, R_2 represents methyl or ethyl, n, o and q independently of one another denote an integer of 1 to 6 and p denotes an integer of 0 to 6;

R_2' and R_3' are identical to or different from each other and represent

$$-CH_2-\underset{\displaystyle CH_3}{\underset{|}{CH}}-,$$

$$-CH_2-CH_2-CH_2-CH_2-,$$

$$-CH_2-CH_2\!+\!OCH_2CH_2\!+_L$$

wherein L denotes an integer of 0 to 5, or

$$-CH_2-CH_2-\left[O-\overset{\displaystyle O}{\overset{\|}{C}}-(CH_2)_5\right]_m$$

wherein m denotes an integer of 1 to 6;

a, b and c independently of one another represent a real number of 3 or less, provided that they satisfy the conditions of

$$0<a\leqq 3,\ 0\leqq b<3 \text{ and } 0\leqq c<3 \text{ and } a+b+c=3.$$

5,703,143

OCULAR LENS MATERIAL

Haruyuki Hiratani; Kazuhiko Nakada, both of Kasugai; Toshio Yamazaki, and Shoji Ichinohe, both of Gunma-ken, all of Japan, assignors to Menicon Co., Ltd., Nagoya, Japan

Filed Jan. 24, 1996, Ser. No. 590,600

Claims priority, application Japan, Jan. 26, 1995, 7-010721

Int. Cl.[6] G02C *7/02*

U.S. Cl. 523—107 4 Claims

1. A transparent ocular lens material comprising a silicon-containing polymer having a recurring unit represented by the general formula (I):

(I)

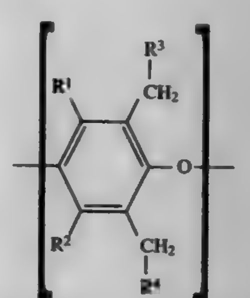

wherein each of R^1, R^2, R^3 and R^4 is independently hydrogen atom, an alkyl group having 1 to 5 carbon atoms, an alkoxy group having 1 to 5 carbon atoms or a group represented by the general formula (II):

$$-\underset{\displaystyle R^7}{\underset{|}{\overset{\displaystyle R^5}{\overset{|}{Si}}}}-R^6 \qquad \text{(II)}$$

in which each of R^5, R^6 and R^7 is independently an alkyl group having 1 to 5 carbon atoms, an alkoxy group having 1 to 5 carbon atoms or phenyl group, and at least one of R^1, R^2, R^3 and R^4 is the group represented by the general formula (II), wherein the content of said silicon-containing polymer is 50 to 100% by weight.

5,703,144

SOLID FURAN BINDERS FOR COMPOSITE ARTICLES

Denis W. Akerberg, Lafayette, Ind., assignor to QO Chemicals, Inc., West Lafayette, Ind.

Continuation of Ser. No. 291,096, Aug. 16, 1994, abandoned. This application Mar. 1, 1996, Ser. No. 609,419

Int. Cl.[6] B22C *1/02;* C08K *9/04*

U.S. Cl. 523—144 24 Claims

1. A solid dry resin composition heat curable to a rigid set condition comprising the reaction product of formaldehyde with furfuryl alcohol in a molar ratio of at least 2:1, the composition containing not more than 10% by weight of water insoluble material and not more than about 5% by weight of furfuryl alcohol.

5,703,145

HOT MELT TYPE INK COMPOSITION FOR INK JET

Akemi Sagawa; Masahiko Sakai; Michio Ebata, and Ren Itoh, all of Ibaraki, Japan, assignors to Hitachi Koki Co., Ltd., Tokyo, Japan

Continuation of Ser. No. 268,024, Jun. 29, 1994, abandoned. This application Oct. 31, 1995, Ser. No. 551,036

Claims priority, application Japan, Jun. 30, 1993, 5-162363

Int. Cl.[6] C09D *11/10*

U.S. Cl. 523—161 10 Claims

1. A method of printing with an ink jet comprising the steps of:

preparing an ink that is a solid at room temperature, that has a rate of volume change accompanied with a phase change within a range of less than 10%, and that comprises at least one resin selected from the group consisting of a polyamide resin, a polyester resin, a polyvinyl acetate resin, a silicone resin and coumarone;

liquefying the ink by heating; and

jetting the ink onto a substrate with an ink jet.

5,703,146

CURABLE COMPOSITION CONTAINING AN OXYPROPYLENE POLYMER AND CALCIUM CARBONATE WHICH HAS BEEN SURFACE TREATED WITH A FATTY ACID

Hiroshi Iwakiri; Masayuki Fujita, and Takashi Hasegawa, all of Hyogo, Japan, assignors to Kanegafuchi Kagaku Kogyo Kabushiki Kaisha, Osaka, Japan

Continuation of Ser. No. 942,600, Sep. 10, 1992, abandoned. This application May 21, 1996, Ser. No. 655,307

Claims priority, application Japan, Sep. 12, 1991, 3-260532

Int. Cl.[6] C08K *9/00*

U.S. Cl. 523—200 6 Claims

1. A curable composition comprising:

(A) 100 parts by weight of an oxypropylene polymer having groups containing a silicon atom to which a hydroxy group or a hydrolyzable group or both a hydroxy group or a hydrolyzable group is bonded, Mn/Mw of not more than 1.6, and an average molecular weight of at least 6,000,

(B) from 100 to 200 parts by weight of calcium carbonate of an average particle size of not larger than 0.5 μm, and surface-treated with a fatty acid,

(C) from 30 to 100 parts by weight of a plasticizer containing at least 5% by weight phthalic acid ester plasticizer,

(D) from 0.5 to 10 parts by weight of a compound represented by the formula $R^1Si(OCH_3)_3$ or $Si(OCH_2CH_3)_4$ wherein R^1 represents a monovalent organic group containing no amino group,

(E) from 0.5 to 10 parts by weight of a compound represented by the following formula (1),

$$R^2Si(CH_3)_n(OR^3)_{3-n} \qquad (1)$$

wherein R^2 represents a monovalent organic group having at least one amino group, R^3 represents CH_3 or CH_2CH_3, and n represents 0 or 1, and

(F) from 0.5 to 5 parts by weight of an organotin curing catalyst, the total amount of said components (D) and (E) being at least 2 parts by weight, and said component (A) occupying from 15 to 35% by weight.

5,703,147

EXTRUDABLE MICROPOROUS INSULATION

Phillip Charles Martin, Conifer; Monroe W. Shumate, Littleton, both of Colo., and William Michael Gregg, Bristol, Ind., assignors to Schuller International, Inc., Denver, Colo.

Filed Aug. 2, 1995, Ser. No. 510,350

Int. Cl.[6] B32B *3/26;* C08J *9/00;9/32*

U.S. Cl. 523—212 20 Claims

1. An extrudable microporous insulation material comprising about:

(a) 10–30 wt % inorganic reinforcement fiber;
(b) 15–35 wt % inorganic binder;
(c) 10–20 wt % hydrophilic fumed particulate filler and bulking material;
(d) 25–50 wt % fumed particulate insulation material which has been surface treated to make the material hydrophobic;
(e) 0.5–5 wt % polymer;
(f) 0–6 wt % setting agent; and
(g) 0–20 wt % opacifier.

5,703,148

ASPHALT-POLYMER COMPOSITIONS, PROCESS FOR MAKING SAME AND USES THEREOF

Yannick Jolivet, le Havre; Michel Malot, Bolbec, and Didier Jamois, Sainte Adresse, all of France, assignors to Total Raffinage Distribution S.A., Puteaux, France

Continuation-in-part of Ser. No. 303,222, Sep. 8, 1994, abandoned. This application Mar. 16, 1995, Ser. No. 414,124

Claims priority, application France, Sep. 9, 1993, 93 10728; Jan. 25, 1995, 95 300830

Int. Cl.[6] C08L *95/00*

U.S. Cl. 524—62 27 Claims

1. Asphalt-polymer composition comprising:

a) at least 25 to 97 wt % of an asphalt
b) at least 1 to 25 wt % of a polymer
c) at least 2 to 50 wt % of at least one aromatic compound derived from petroleum cuts having an initial distillation point above 200 ° C.,

wherein

the at least one aromatic compound and the polymer are present in amounts such that the ratio of amount present of aromatic compound to amount present of polymer is from 0.5 to 10,

the composition has a FRAAS point of less than or equal to −13 ° C., and

the composition has storage stability defined by a "Δ ring-and-ball" and a "Δ penetrability" of less than or equal to 5.

5,703,149

PROCESS FOR THE PREPARATION OF STABILIZED OLEFIN POLYMERS

Bruno Rotzinger, Birsfelden; Thomas Schmutz, Riehen; Martin Brunner, Marly, and Werner Stauffer, Fribourg, all of Switzerland, assignors to Ciba Specialty Chemicals Corporation, Tarrytown, N.Y.

Filed Jun. 24, 1996, Ser. No. 668,889

Claims priority, application Switzerland, Jun. 29, 1995, 1912/95

Int. Cl.[6] C08K *5/49*

U.S. Cl. 524—116 4 Claims

1. A process for the preparation of olefin polymers by polymerization of said olefin over a zirconium transition metallocene catalyst, which comprises

carrying out the polymerization with the addition of a phosphorus(III) compound which is tris(2,4-di-tert-butylphenyl) phosphite, a sterically hindered phenol which is 1,3,5-tris(3,5-di-tert-butyl-4-hydroxybenzyl)-2,4,6-trimethylbenzene and an acid scavenger which is a hydrotalcite DHT-4A ($=Mg_{4.5}Al_2(OH)_{13}CO_3—3.5H_2O$) where the addition of the phosphorus(III) compound takes place only after polymerization has started and only after the total polymer conversion is at least 0.1%.

5,703,150

PHOSPHONITE OR PHOSPHONATE COMPOUNDS AND USE THEREOF

Tetsuji Ike; Takeshi Inoue, both of Fukuoka, and Yoshihiro Ozaki, Osaka, all of Japan, assignors to Yoshitomi Pharmaceutical Industries, Ltd., Osaka, Japan

Filed Dec. 27, 1995, Ser. No. 579,256

Claims priority, application Japan, Dec. 28, 1994, 6-328039

Int. Cl.⁶ C08J *3/00;* **C07F** *9/02*

U.S. Cl. 524—125 **3 Claims**

1. A compound of the formula

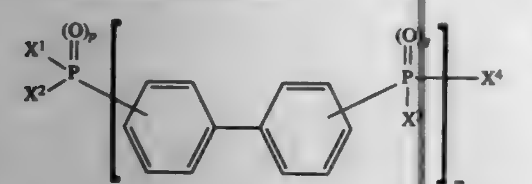

(I)

wherein X^1, X^2 and X^4 are each independently a group of the formula

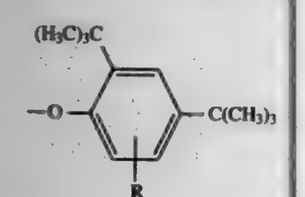

wherein R is a hydrogen atom or a methyl group, X^3 is independently, with regard to each repeat unit, a group of the formula

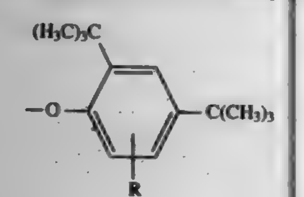

wherein R is a hydrogen atom or a methyl group, p is 0 or 1, q is independently 0 or 1 with regard to each repeat unit, and m is an integer of 2–10.

5,703,151

RUBBER COMPOSITION

Keisuku Yamamoto; Kizuku Wakatsuki, both of Ichihara, and Hayato Saba, Funabashi, all of Japan, assignors to Sumitomo Chemical Company, Limited, Osaka, Japan

Filed Apr. 17, 1996, Ser. No. 632,798

Claims priority, application Japan, Apr. 17, 1995, 7-091188

Int. Cl.⁶ C08K *5/24*

U.S. Cl. 524—262 **9 Claims**

1. A rubber composition obtainable by kneading a mixture at a maximum temperature between about 120° to about 170° C., said mixture comprising:

100 parts by weight of a solution-polymerized styrene-butadiene rubber having a Mooney viscosity (ML_{1+4} 125° C.) in a range of from about 40 to about 140;

about 5 to about 100 parts by weight of silica;

about 1 to about 15 parts by weight of a silane coupling agent; and

about 1 to about 15 parts by weight of a polyalkylene glycol having a weight average molecular weight of about 200 to about 20,000.

5,703,152

DEODORIZING COMPOSITION AND DEODORIZING RESIN COMPOSITION CONTAINING IRON (II) COMPOUND

Chiaki Ohama, Yokohama, Japan, assignor to Minato Company, Ltd., Japan

PCT No. PCT/JP94/02275, § 371 Date Aug. 9, 1995, § 102(e) Date Aug. 9, 1995, PCT Pub. No. WO96/20018, PCT Pub. Date Jul. 4, 1996

PCT Filed Dec. 27, 1994, Ser. No. 501,037

Int. Cl.⁶ C08J *5/10;* **C08K** *3/10;* **C08L** *23/04*

U.S. Cl. 524—435 **29 Claims**

1. A deodorizing composition comprising an aqueous slurry including a ferrous compound, a chelating agent and a porous substance, wherein the amount of said chelating agent is at least one equivalent per equivalent of said ferrous compound and wherein the amount of said porous substance is at least 0.5 part by weight per part by weight of said ferrous compound.

5,703,153

MULTI-TEMPERATURE GLUE STICK

Elias Shukri Maayeh, Arlington, Tex., assignor to Uniplast, Inc., Arlington, Tex.

Continuation of Ser. No. 70,046, Jun. 1, 1993, Pat. No. 5,362,792. This application Nov. 7, 1994, Ser. No. 336,256

Int. Cl.⁶ C08J *5/10;* **C08K** *5/01;* **C08L** *57/02*

U.S. Cl. 524—499 **9 Claims**

1. A glue stick adapted for use in a glue gun operating at either about 250° F. or about 380° F. which stick comprises EVA copolymer and tackifier, said stick providing a viscosity of glue between about 5000 cps and about 40,000 cps when applied at temperatures between about 380° F. and about 250° F.

5,703,154

PREMOLDED PIPE FLASHING COMPOSITIONS

James A. Davis; William A. Wasitis, both of Indianapolis, Ind., and William F. Barham, Hope, Ark., assignors to Bridgestone/Firestone, Inc., Akron, Ohio

Filed Jul. 11, 1996, Ser. No. 678,205

Int. Cl.⁶ C08L *31/04*

U.S. Cl. 524—525 **20 Claims**

1. A premolded pipe flashing composition comprising:

100 parts by weight of an elastomeric polymer comprising

from about 70 to about 95 parts by weight of at least one essentially amorphous ethylene-propylene-diene terpolymer; and

from about 5 to about 30 parts by weight of at least one essentially crystalline or semi-crystalline ethylene-propylene-diene terpolymer having at least about 3 weight percent unsaturation;

from about 35 to about 175 parts by weight of a filler selected from the group consisting of reinforcing and non-reinforcing fillers and mixtures thereof, per 100 parts of said polymer;

from about 30 to about 110 parts by weight of a processing material selected from the group consisting of paraffinic oils, naphthenic oils and waxes and mixtures thereof, per 100 parts of said polymer; and

from about 0.6 to about 7.5 parts by weight of a cure package, per 100 parts of said polymer, said cure package comprising from about 0.1 to 1.5 parts by weight sulfur and from about 0.5 to 6 parts by weight of at least one sulfur vulcanizing accelerator.

5,703,155

WATERBORNE COATING COMPOSITION HAVING IMPROVED RHEOLOGY CONTROL AND APPEARANCE

Shanti Swarup, Allison Park, and Richard J. Sadvary, Pittsburgh, both of Pa., assignors to PPG Industries, Inc., Pittsburgh, Pa.

Continuation-in-part of Ser. No. 356,808, Dec. 15, 1994, Pat. No. 5,506,325. This application Apr. 4, 1996, Ser. No. 627,527

Int. Cl.⁶ C08L *31/00;* **C08F** *20/10*

U.S. Cl. 524—558 **22 Claims**

1. A waterborne coating composition comprising a polymeric film-forming resin; up to about 2.1 percent by weight, based on the total weight of resin solids, of a hydrophobic amorphous fumed silica; and about 0.5 to about 4.0 percent by weight, based on the total weight of resin solids, of a non-gelled copolymer; wherein the non-gelled copolymer comprises a reaction product of:

about 75 to about 95 percent by weight based upon the total solid weight of reactants used to prepare the copolymer of at least one ethylenically unsaturated unsubstituted or hydroxyl functional aliphatic or aromatic monomer;

about 2 to about 12 percent by weight based upon the total solid weight of reactants used to prepare the copolymer of an ethylenically unsaturated monomer having one acid functional group; and

about 2 to about 20 percent by weight based upon the total solid weight of reactants used to prepare the copolymer of an ethylenically unsaturated oligomeric monomer having a number average molecular weight of about 1500 to about 4000 and which is derived from a hydroxyl functional acid having a predominantly hydrocarbon chain of from about 10 to 19 carbon atoms.

5,703,156

DISPERSIBLE POWDER BINDERS

Thomas Sauer, Haltern, Germany, assignor to Polymer Latex GmbH & Co. KG, Marl, Germany

Continuation of Ser. No. 365,107, Dec. 28, 1994, abandoned. This application Jul. 5, 1996, Ser. No. 674,634

Claims priority, application Germany, Mar. 9, 1994, 44 07 841.2

Int. Cl.⁶ C08K *3/20;* **C08L** *1/28*

U.S. Cl. 524—802 **13 Claims**

1. A redispersible powdered binder, comprising:

(I) an aqueous acrylate dispersion stabilized with a protective colloid having a solids content of 10 to 65 wt. %; and

(II) 0.01 to 30 wt. %, based on 100 wt. % of component (I) of a water-soluble or water-dispersible resin having a mean molecular weight ranging from 2000 to 100,000 g/mol, consisting of

(a) 50 to 70 wt. % of at least one hydrophobic monomer, essentially insoluble in water by having a solubility in water of less than 3 wt. % at 25° C., and

(b) 50 to 30 wt. % of at least one hydrophilic monomer, which is soluble in water and which forms salts, where the solubility of these monomers in metal or ammonium salt form in water is at least 10 wt. % at 25° C.;

prepared by spray-drying the combination of components (I) and (II) in a hot air stream to form the powdered binder with the formation of little dust.

5,703,157

PROCESS OF PREPARING COPOLYMER LATEX AND USE THEREOF

Wataru Fujiwara; Junkoh Hyoda, both of Niihama; Kenichi Yamazaki, Kobe, and Noriko Kitamura, Osaka, all of Japan, assignors to Sumitomo Dow Limited, Osaka, Japan

Continuation of Ser. No. 443,035, May 17, 1995, which is a division of Ser. No. 108,596, Sep. 3, 1993, abandoned. This application Dec. 3, 1996, Ser. No. 758,298

Claims priority, application Japan, Jan. 10, 1992, 4-21955; Jan. 27, 1992, 4-37059; Feb. 3, 1992, 4-427999; Jun. 18, 1992, 4-186054; Jun. 30, 1992, 4-197849

Int. Cl.⁶ C08L *31/00*

U.S. Cl. 524—822 **15 Claims**

1. A paper coating composition for gravure printing comprising a pigment and a copolymer latex as a binder, characterized in that said copolymer latex is a copolymer latex prepared by emulsion copolymerizing monomer mixture comprising 30 to 77.5% by weight of 1,3-butadiene, 0.5 to 10% by weight of an ethylenically unsaturated carboxylic acid monomer, and 10 to 69.5% by weight of other monomer copolymerizable therewith in the presence of 0.1 to 30 wt. parts per 100 weight parts of the monomer mixture of a cyclic unsaturated hydrocarbon having one unsaturated bond in a ring selected from the group consisting of cyclopentene, cyclohexene and cycloheptene, said other monomer copolymerizable therewith comprising styrene, said styrene being present in an amount of at least 22% by weight of said monomer mixture.

5,703,158

AQUEOUS ANIONIC POLY (URETHANE/UREA) DISPERSIONS

Youlu Duan, Minneapolis; Michael J. Dochniak, St. Paul, and Sonja Stammler, Marine On The St. Croix, all of Minn., assignors to H.B. Fuller Licensing & Financing, Inc., Arden Hills, Minn.

Continuation-in-part of Ser. No. 126,508, Sep. 24, 1993, abandoned, and a continuation-in-part of Ser. No. 304,653, Sep. 9, 1994, Pat. No. 5,608,000. This application Nov. 22, 1994, Ser. No. 343,676

Int. Cl.⁶ C08L *75/06;* **C08G** *18/46;* **C09D** *175/06;* **C09J** *175/06*

U.S. Cl. 524—840 **30 Claims**

1. A stable aqueous dispersion of an anionic poly(urethane/urea) polymer, the poly(urethane/urea) polymer comprising the reaction product in aqueous dispersion of an isocyanate terminated polyurethane prepolymer and at least one amine functional chain extender or chain terminator compound, wherein

the isocyanate terminated polyurethane prepolymer comprises the reaction product of a polyisocyanate component comprising a diisocyanate, with a polyol component, the polyol component providing both carboxylate groups and sulfonate groups and comprises:

at least one sulfonated polyester; and

at least one hydroxy carboxylic acid of the formula:

$$(HO)_xR(COOH)_y$$

wherein R represents a straight or branched, hydrocarbon radical containing 1 to 12 carbon atoms, and x and y represent values from 1 to 3, provided, however, that when the value of x is 1, an amount of moles of trifunctional isocyanate equal to the number of moles of said hydroxy carboxylic acid in which x is 1 is employed in the polyisocyanate component and when x is 3, an amount of moles of monofunctional isocyanate equal to the number of moles of said hydroxy carboxylic acid in which x is 3 is employed; and

the carboxylate and sulfonate groups of said isocyanate prepolymer are anionic, having counter-ions provided by neutralization with an alkali hydroxide or a tertiary amine prior to, or

simultaneous with, said reaction of said prepolymer and said amine functional chain extender or terminator.

5,703,159

MODIFICATION OF RESINS WITH ISOCYANATOSILOXANES

Shoji Ichinohe; Toshio Yamazaki, and Akira Yamamoto, all of Usui-gun, Japan, assignors to Shin-Etsu Chemical Co., Ltd., Tokyo, Japan

Filed Dec. 11, 1995, Ser. No. 570,387

Claims priority, application Japan, Dec. 12, 1994, 6-332149; Jul. 17, 1995, 7-202815

Int. Cl.⁶ C08G *77/26*

U.S. Cl. 525—54.3 **21 Claims**

1. A method for modifying a resin having a group reactive with an isocyanate group on a side chain which comprises reacting the resin with a single end isocyanatosiloxane which isocyanatosiloxane is obtained by effecting addition reaction between a single end hydrogenosiloxane of the following formula (I):

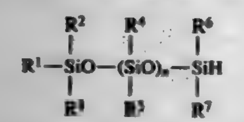

(I)

wherein R^1 to R^7 are independently selected from halogen-substituted or unsubstituted monovalent hydrocarbon groups having 1 to 8 carbon atoms and letter n is an integer of at least 1 and an isocyanate group-containing organic silicon compound having one isocyanate group and at least one aliphatic unsaturated hydrocarbon group in a molecule of the following formula (II):

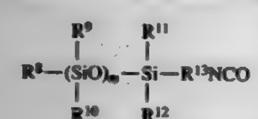

(II)

wherein R^8 to R^{12} are independently selected from halogen-substituted or unsubstituted monovalent hydrocarbon groups having 1 to 8 carbon atoms or R^8 to R^{12}, taken together, may form a cyclic structure, with the proviso that at least one of R^8 to R^{12} is an aliphatic unsaturated hydrocarbon group, R^{13} is a divalent hydrocarbon group having 1 to 12 carbon atoms, and letter m is an integer inclusive of 0.

5,703,160

BIODEGRADABLE MOULDING COMPOSITIONS COMPRISING A STARCH, A BIODEGRADABLE POLYESTER, AND A SALT OF A HYDROXYCARBOXYLIC ACID

Claude Dehennau; Thierry Depireux, both of Waterloo, Belgium; Guy Fleche, Hazebrouck, France; Serge Gosset, Lestrem, France, and Didier Videau, Lille, France, assignors to Solvay S.A., Brussels, Belgium, and Roquette Freres, Lestrem, France

Filed Jul. 15, 1993, Ser. No. 91,868

Claims priority, application Belgium, Jul. 15, 1992, 92.00656; France, Jul. 15, 1992, 92 08730

Int. Cl.⁶ C08G *63/08;* **C08B** *37/00*

U.S. Cl. 525—54.24 **45 Claims**

1. A biodegradable thermoformable composition comprising:
a) at least one starchy compound;
b) at least one biodegradable polyester; and
c) at least one salt of an hydroxycarboxylic acid.

5,703,161

POLYMER MIXTURE AND FILMS PREPARED THEREFROM

Roland Eugen Steenblock, Meckenheim; Norbert Franz Kock, Wachtberg, and Detlef Herbert Fiedler, Bonn, all of Germany, assignors to Elf Atochem Deutschland GmbH, Dusseldorf, Germany

Division of Ser. No. 410,107, Mar. 24, 1995, Pat. No. 5,614,588. This application Aug. 27, 1996, Ser. No. 703,504

Claims priority, application Germany, Mar. 24, 1994, 44 10 921.0

Int. Cl.⁶ C08G *63/48*

U.S. Cl. 525—66 **3 Claims**

1. A process for producing a waterproof, water vapor permeable, wind resistant textile composite material comprising combining a film and a textile material; wherein, the film is water vapor permeable and waterproof, and is produced from a polymer mixture comprising:

constituent (A) 50 to 85 wt. % of a polyether block amide consisting of 30 to 60 wt. % of polyamide-12, polyamide-11 and/or polyamide-12,12 blocks and 70 to 40 wt. % of polyethylene glycol blocks,

constituent (B) 10 to 40 wt. % of a polyether block amide consisting of 65 to 85 wt. % of polyamide-12, polyamide-11 and/or polyamide-12,12 blocks and 35 to 15 wt. % of polyethylene glycol blocks, and

constituent (C) 5 to 40 wt. % of a poly(ethylene-co-vinylacetate-g-maleic anhydride) polymer consisting of 75 to 95 wt. % of ethylene monomer, 5 to 25 wt. % of vinylacetate monomer and 0.1 to 2 wt. % of maleic anhydride monomer,

wherein the wt. % for the constituents (A), (B) and (C) are based upon the total amount of polymer mixture and the wt. % for the blocks making constituents (A) and (B), and the monomers making constituent C are based upon the weight of the constituent.

5,703,162

BRANCHED COPOLYMER PRESSURE SENSITIVE HOT MELT ADHESIVE

Carolyn M. Anderson, Stillwater, Minn., assignor to H. B. Fuller Licensing & Financing, Inc., St. Paul, Minn.

Continuation of Ser. No. 238,678, May 5, 1994, abandoned. This application Aug. 28, 1995, Ser. No. 520,041

Int. Cl.⁶ C08L *53/05;* **C08F** *297/04*

U.S. Cl. 525—89 **6 Claims**

1. A hot melt, pressure sensitive adhesive composition comprising:

(a) about 5 to about 30 percent by weight of a first block copolymer comprising a substantially saturated A-B-A block copolymer having B or C side chains wherein A is polystyrene, B is selected from the group consisting of ethylene-propylene, ethylene-butylene and mixtures thereof, and C is selected from the group consisting of isoprene, butadiene, and mixtures thereof;

(b) about 3 to about 10 percent by weight of a second block copolymer selected from the group consisting of styrene-ethylene-butylene-styrene block copolymer, styrene-ethylene-propylene-styrene block copolymer and mixtures thereof;

(c) about 10 to 50 percent by weight of a plasticizer; and

(d) 0 to 65 percent by weight of a solid tackifying agent.

5,703,163

LOOP POLYMERS

Kurt Baum, Pasadena, Calif., assignor to Fluorochem, Inc., Azusa, Calif.

Filed May 31, 1995, Ser. No. 455,696

Int. Cl.⁶ C08L *83/05*

U.S. Cl. 525—105 **2 Claims**

1. Loop polymers having a polymeric backbone and a plurality of olefinic groups which have been converted to closed loops by

reaction with difunctional organic compounds reactive with said olefinic groups, said olefinic groups form which the loops are formed may either be present within the backbone and/or pendent from the polymeric backbone, wherein the difunctional organic compound is alpha, omega-hydride terminated polydimethylsiloxane.

5,703,164

STYRENE POLYMER COMPOSITION

Akikazu Nakano, Osaka, Japan, assignor to Idemitsu Kosan Co., Ltd., Tokyo, Japan

Continuation of Ser. No. 480,244, Jun. 7, 1995, abandoned, which is a division of Ser. No. 424,232, Apr. 19, 1995, abandoned, which is a continuation of Ser. No. 340,818, Nov. 17, 1994, abandoned, which is a continuation of Ser. No. 15,306, Feb. 9, 1993, abandoned, which is a continuation of Ser. No. 581,115, Sep. 12, 1990, abandoned. This application Feb. 12, 1997, Ser. No. 798,105

Int. Cl.⁶ C08F *8/00*

U.S. Cl. 525—133 **14 Claims**

1. A styrene polymer composition comprising:

(A) 94 to 20% by weight of a styrene polymer having no functional group,

(B) 1 to 30% by weight of a polyphenylene ether having a polar group,

(C) 5 to 65% by weight of a polyamide, and

(D) 1 to 350 parts by weight of a filler surface-treated with a coupling agent, based on 100 parts by weight of the sum of the components (A), (B) and (C).

5,703,165

METHOD OF ACHIEVING SUPERIOR DISPERSIONS OF INSOLUBLE SULFUR AND PRODUCTS THEREOF

George B. Brands, Wilmette, Ill., assignor to Saynad Corporation, and The Brands Family Illinois Limited Partnership, both of Wilmette, Ill.

Continuation-in-part of Ser. No. 187,659, Jan. 25, 1994, Pat. No. 5,475,059, which is a continuation-in-part of Ser. No. 993,205, Dec. 18, 1992, abandoned. This application Jun. 5, 1995, Ser. No. 464,188

Int. Cl.⁶ C08F *28/02*

U.S. Cl. 525—189 **2 Claims**

1. A method of preparing a blend of a vulcanizable polymer and insoluble sulfur which comprises using as the insoluble sulfur an insoluble sulfur which is in a metastable, elastic unhardened state, said insoluble sulfur having had its metastable state preserved by lowering its temperature below its glass transition temperature.

5,703,166

GOLF BALL COMPOSITIONS BASED ON BLENDS OF OLEFINIC IONOMERS AND METALLOCENE CATALYZED POLYMERS

Murali Rajagopalan, South Dartmouth, and Kevin Harris, New Bedford, both of Mass., assignors to Acushnet Company, Fairhaven, Mass.

Continuation-in-part of Ser. No. 377,553, Jan. 24, 1995, abandoned. This application Jun. 7, 1995, Ser. No. 482,514

Int. Cl.⁶ A63B *37/12*

U.S. Cl. 525—196 **29 Claims**

1. A golf ball comprising a cover and a core wherein the cover comprises an at least partially miscible blend of at least one ionomer and at least one metallocene catalyzed polymer having the formula:

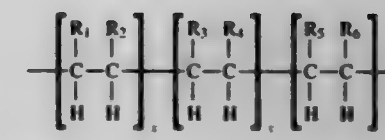

wherein

R_1 is hydrogen;

R_2 is hydrogen or lower alkyl selected from the group consisting of CH_3, C_2H_5, C_3H_7, C_4H_9, and C_5H_{11};

R_3 is hydrogen or lower alkyl selected from the group consisting of CH_3, C_2H_5, C_3H_7, C_4H_9, and C_5H_{11};

R_4 is selected from the group consisting of CH_3, C_2H_5, C_3H_7, C_4H_9, C_5H_{11}, C_6H_{13}, C_7H_{15}, C_9H_{19}, $C_{10}H_{21}$, and phenyl, in which from 0 to 5 H within R_4 can be replaced by substituents selected from the group consisting of COOH, SO_3H, NH_2, F, Cl, Br, I, OH, SH, silicone, lower alkyl esters and lower alkyl ethers, with the proviso that R_3 and R_4 can be combined to form a bicyclic ring;

R_5 is hydrogen, lower alkyl including C_1–C_5, carbocyclic, aromatic or heterocyclic;

R_6 is hydrogen, lower alkyl including C_1–C_5, carbocyclic, aromatic or heterocyclic; and

wherein x ranges from 99 to 50 weight per cent of the polymer, y ranges from 1 to 50 weight per cent of the polymer and z ranges from 0 to 49 weight per cent of the polymer.

5,703,167

MODIFIER FOR RESIN AND RUBBER

Tadayuki Ohmae; Haruhiko Hisada; Kenichi Hosoda; Masahide Yoshiya; Yoshiyuki Komori, all of Osaka; Noboru Yamaguchi; Tohru Fujiki, both of Chiba, and Noriyasu Yasuda, Gifu, all of Japan, assignors to Marubishi Oil Chemical Co., Ltd., and Sumitomo Chemical Company, Limited, both of Osaka, Japan

Continuation of Ser. No. 363,024, Dec. 23, 1994, abandoned. This application Mar. 14, 1997, Ser. No. 818,383

Claims priority, application Japan, Dec. 24, 1993, 5-327401

Int. Cl.⁶ C08F *8/14*

U.S. Cl. 525—207 **7 Claims**

1. A process for producing a thermoplastic resin composition which comprises a thermoplastic resin and a modifier comprising a reaction product of (A) a styrene copolymer having a number average molecular weight of 1000 to 4000 and a copolymerization ratio of styrene to maleic anhydride of 1:1 to 5:1 in moles, with (B) poly(alkylene oxide) monoalkyl ether having a number average molecular weight of 100 to 5000, the amount of the modifier being 0.1 to 25% by weight based on the weight of the thermoplastic resin, which process comprises a step of melt-kneading the modifier with the thermoplastic resin.

5,703,168

Patent Not Issued For This Number

5,703,169

NON-CORROSIVE, LOW VOLATILES-CONTAINING PRESSURE SENSITIVE ADHESIVE

Michael J. Zajaczkowski, Yoe, and Barbara A. Stutzman, Dover, both of Pa., assignors to Adhesives Research, Inc., Glen Rock, Pa.

Filed Jan. 24, 1996, Ser. No. 590,603

Int. Cl.^{6} C08F *290/04;* **C09J** *151/00*

U.S. Cl. 525—309 **16 Claims**

1. A normally tacky non-polar monomer-containing phase separated graft copolymer having pressure sensitive adhesive properties comprised of a backbone polymer having a polymeric moiety grafted thereto, comprising the reaction product of

(1) at least one A monomer consisting of a monomeric acrylic or methacrylic acid ester of a non-tertiary alcohol, said alcohol having from 1 to 3 carbon atoms,

(2) at least one B monomer consisting of a monomeric acrylic or methacrylic acid ester of a non-tertiary alcohol, said alcohol having from 4 to 12 carbon atoms,

(3) said graft is a polymeric moiety having a Tg greater than 20° C. and a molecular weight ranging from about 2,000 to about 13,000, said polymeric moiety selected from the group consisting of poly(alpha-methylstyrene), poly(meth)acrylonitrile, polyvinyltoluene, polystyrene, polyindene, poly(t-butylstyrene), polyethylene, polypropylene, poly(vinyl acetate), poly(lower alkyl)methacrylate, poly(2-oxazoline), poly(meth)acrylamide and poly(*N,N*-di(lower alkyl)acrylamide); and

wherein the weight ratio of said at least one A monomer to said at least one B monomer ranges from about 1:2 to 2:1, the average number of carbon atoms present in the alcohol portion of the total acrylic or (meth)acrylic acid esters of monomers A and B present ranges from about 2.5 to 3.5, and said graft polymeric moiety is present in an amount up to about 6.5 wt. % based on the total weight of the copolymer.

5,703,170

NON-CORROSIVE, LOW VOLATILES-CONTAINING PRESSURE SENSITIVE ADHESIVE

Michael J. Zajaczkowski, York, and Barbara A. Stutzman, Dover, both of Pa., assignors to Adhesives Research, Inc., Glen Rock, Pa.

Continuation-in-part of Ser. No. 590,603, Jan. 24, 1996. This application Jan. 17, 1997, Ser. No. 785,253

Int. Cl.^{6} C08F *265/04*

U.S. Cl. 525—309 **21 Claims**

1. A normally tacky non-polar monomer-containing phase separated graft copolymer having pressure sensitive adhesive properties comprised of a backbone polymer having a polymeric moiety grafted thereto, comprising the reaction product of

(1) at least one A monomer consisting of a monomeric acrylic or methacrylic acid ester of a non-tertiary alcohol, said alcohol having from 1 to 3 carbon atoms,

(2) at least one B monomer consisting of a monomeric acrylic or methacrylic acid ester of a non-tertiary alcohol, said alcohol having from 4 to 12 carbon atoms, and

(3) a graft polymeric moiety C having a Tg greater than 20° C. selected from the group consisting of poly(alpha-methylstyrene), poly(meth)acrylonitrile, polyvinyltoluene, polystyrene, polyindene, poly(t-butylstyrene), polyethylene, polypropylene, poly(vinyl acetate), poly(lower alkyl-)methacrylate, poly(2-oxazoline), poly(meth)acrylamide and poly(N,N-di(lower alkyl)acrylamide); and

wherein the weight ratio of said at least one A monomer to said at least one B monomer ranges from about 1:2 to 2:1, and the average number of carbon atoms present in the alcohol portion of the total acrylic or (meth)acrylic acid esters of monomers A and B present ranges from about 2.5 to 3.5, with the proviso that when the molecular weight of the graft polymeric moiety ranges from 2,000 to 13,000 the graft polymeric moiety is present in an amount of up to about 20% by wt., and when the molecular weight of the graft polymeric moiety is greater than 13,000, then the graft polymeric moiety is present in an amount of up to about 30% by wt.

5,703,171

VISCOSITY MODIFIER POLYBUTADIENE POLYMERS

Mark Joseph Struglinski, Bridgewater; Gary William Ver-Strate, Atlantic Highlands, and Lewis J. Fetters, Annandale, all of N.J., assignors to Exxon Chemical Patents Inc, Linden, N.J.

Division of Ser. No. 380,488, Jan. 30, 1995, abandoned, which is a continuation of Ser. No. 226,578, Apr. 12, 1994, abandoned, which is a division of Ser. No. 670,114, Mar. 15, 1991, Pat. No. 5,310,814. This application Jun. 7, 1995, Ser. No. 487,360

Int. Cl.^{6} C08F *297/00*

U.S. Cl. 525—314 **4 Claims**

1. A process comprising the steps of:

forming through polymerization, a precursor polybutadiene block copolymer comprising at least one precursor crystallizable segment comprising 1,4-polybutadiene and at least one precursor low crystallinity segment of polybutadiene wherein butadiene is added to the polymer chain as 1,4 butadiene and 1,2 butadiene, the precursor block copolymer comprising at least 10 percent by weight precursor crystallizable segments, wherein polymerization comprises forming a segment comprising at least 70 mole percent butadiene added as 1,2-butadiene: forming a 1,4-polybutadiene segment; and forming a segment comprising at least 70 mole percent butadiene added as 1,2-butadiene;

adding a coupling agent to form a precursor star block copolymer; and

substantially hydrogenating the precursor polybutadiene star block copolymer to form a hydrogenated block copolymer, arms of which comprise at least 10 percent by weight of at least one crystallizable segment comprised of methylene units and having an average methylene content corresponding to a 1,4-polybutadiene content of at least about 20 mole percent, and at least one low crystallinity segment comprised of methylene units and substituted methylene units and having an average methylene content corresponding to a 1,4-polybutadiene content of less than about 20 mole percent.

5,703,172

PROPYLENE BLOCK COPOLYMER AND PROCESS FOR PRODUCING THE SAME

Kazuyuki Watanabe; Hisayoshi Yanagihara, and Shimako Matsumoto, all of Oita, Japan, assignors to Showa Denko K.K., Tokyo, Japan

Filed Nov. 16, 1995, Ser. No. 558,872

Claims priority, application Japan, Nov. 21, 1994, 6-311241; Nov. 21, 1994, 6-311242

Int. Cl.^{6} C08F *10/06*

U.S. Cl. 525—323 **5 Claims**

1. A propylene block copolymer comprising a matrix phase and a dispersed phase dispersed in said matrix phase,

said matrix phase comprising (a) polypropylene;

said dispersed phase having an average particle diameter of from 0.1 to 5 μm; and

said dispersed phase comprising

an outer layer comprising (b) propylene-α-olefin copolymer rubber and

an inner layer comprising (c) crystalline polyethylene dispersed therein a plurality of particles comprising an outer layer comprising (b') propylene-α-olefin copolymer rubber and an inner layer comprising (a') polypropylene.

5,703,173

TRANSITION METALLOHALOPOLYMERS

Timothy S. Koloski, and Terrence G. Vargo, both of Kenmore, N.Y., assignors to Integument Technologies, Inc., Jamestown, N.Y.

Filed Aug. 16, 1996, Ser. No. 689,707

Int. Cl.^{6} C08F *81/42*

U.S. Cl. 525—326.2 **31 Claims**

1. A metallohalopolymer, which comprises a halogenated polymer having an outer surface modified with hydrogen and oxygen or oxygen-containing groups substituted for at least a portion of the halogen atoms thereon to provide an oxyhalopolymer, the oxygen or oxygen-containing groups on said oxyhalopolymer modified with an amount of covalently bonded transition metal on the outermost surface of said oxyhalopolymer and to depths of up to about 200 Å to provide a surface having catalytic activity related to that of the particular transition metal, wherein the bulk characteristics of the halogenated polymer are retained below the modified outer surface region of the metallohalopolymer.

5,703,174

AIR CONTROLLING SUPERPLASTICIZERS

Ahmad Arfaei, Chelmsford, and James F. Lambert, Chestnut Hill, both of Mass., assignors to W. R. Grace & Co.-Conn., New York, N.Y.

Filed Jun. 21, 1995, Ser. No. 493,036

Int. Cl.^{6} C08F *8/32;8/14*

U.S. Cl. 525—329.9 **50 Claims**

1. An air controlling polymeric superplasticizer having a carbon backbone formed by polymerization of ethylenically-unsaturated carboxylic acids, wherein said backbone comprises carboxylic acid grafting sites to which are covalently attached

a) air detraining functional side chains, wherein said air detraining functional side chains are first polyoxyalkylene groups of the general formula

$$R^4—(OA^2)_x—Q—$$

wherein

OA^2 is a mixture of EO and PO groups wherein the weight ratio of EO to PO groups is from 3:1 to 0.3:1;

Q=O or NH;

$A^2=C_1–C_{10}$ alkylene;

x=1 to 200; and

$R^4=C_1–C_{10}$ alkyl, and

b) second polyoxyalkylene groups of the general formula $R^5—O—(A^3O)_y—(A^3)_p—N=—$, wherein $A^3=C_1–C_{10}$ alkylene; y=1 to 200; p=1 to 50; and $R^5=C_1–C_{10}$ alkyl.

5,703,175

CAUSTIC-STABLE MODIFIED POLYCARBOXYLATE COMPOUND AND METHOD OF MAKING THE SAME

Donald Borseth, Plymouth, and David McCall, Detroit, both of Mich., assignors to Diversey Lever, Inc., Plymouth, Mich.

Division of Ser. No. 778,458, Oct. 16, 1991. This application Jun. 7, 1995, Ser. No. 477,146

Int. Cl.^{6} C08F *8/40*

U.S. Cl. 525—340 **15 Claims**

1. A method for producing surfactant-modified polymers having a polycarboxylate backbone and nonionic surfactant chemically grafted therewith comprising the steps of:

(a) admixing an amount of nonionic surfactant with an aqueous solution containing a reactant compounds selected from the group consisting of carboxylic acids, polycarboxylic acids and mixtures thereof;

(b) initiating a reaction in the aqueous solution containing in the nonionic surfactant and the reactant compound;

(c) allowing the reaction to proceed until a polymer is produced having a polycarboxylate backbone and at least 0.5 percent by weight nonionic surfactant chemically grafted therewith based on the total weight of the polymer.

5,703,176

POLYACRYLATE THICKENER AND METHOD FOR MAKING SAME

Gary Allan Ungefug, Simpsonville; Benjamin Marvin Wicker, Ware Shoals; James Richard Bible, Fountain Inn, all of S.C., and Billy Thomas Worley, Jr., Dalton, Ga., assignors to Para-Chem Southern, Inc., Simpsonville, S.C.

Filed Mar. 18, 1996, Ser. No. 620,852

Int. Cl.^{6} C08F *8/42*

U.S. Cl. 525—369 **15 Claims**

1. A method of preparing polyacrylate thickeners, said method comprising the steps of:

polymerizing an acrylate ester monomer blend in an aqueous emulsion, said acrylate ester monomer blend comprising primarily ethyl acrylate, said ethyl acrylate being polymerized to form a poly (ethyl acrylate); and

hydrolyzing at least a portion of said poly (ethyl acrylate) using a metal hydroxide, said poly (ethyl acrylate) being converted to a metal polyacrylate and ethyl alcohol.

5,703,177

PARTIALLY CRYSTALLINE BLOCK COPOLYESTER-POLYAMIDES

Heinz Hoff, Tamins, Switzerland, assignor to Ems-Inventa AG, Zurich, Switzerland

Filed Dec. 15, 1995, Ser. No. 573,058

Claims priority, application Germany, Dec. 16, 1994, 44 44 948.8

Int. Cl.^{6} C08G *81/00*

U.S. Cl. 525—411 **2 Claims**

1. A process for the manufacture of a biologically degradable, partially crystalline block copolyester-polyamide comprising the steps

a) polycondensation of at least one amide to form pre-polymerized polyamide blocks and/or copolyamide blocks having a defined number average molar mass not exceeding 3,000 g/mole, and then

b) admixture of the pre-polymerized polyamide and/or copolyamide blocks with one or more polyester components selected from the group consisting of polyester blocks, copolyester blocks and copolyester-polyamide blocks, and

c) polycondensation of the admixture under a vacuum in the presence of a condensation catalyst, controlling temperature, pressure, catalyst and catalyst concentration such that no exchange reaction takes place, until a block copolyester-polyamide is formed in which the average molar mass and molar mass distribution of the polyester and polyamide blocks is the same prior to and after condensation.

5,703,178

HEAT ABLATIVE COATING COMPOSITION

Roland L. Gasmena, Little Rock, Ark., assignor to Ameron International Corporation, Pasadena, Calif.

Filed Nov. 30, 1995, Ser. No. 565,112

Int. Cl.^{6} C08K *3/20*

U.S. Cl. 525—476 **14 Claims**

1. An ambient-curing heat ablative coating composition prepared by combining:

an epoxy functional silane compound;
a nonsilicon-containing epoxy resin;
a siloxane;
a silicon containing polyether;
an aminosilane;
at least one organometallic catalyst;
at least one organic solvent;
water; and
at least one filler.

5,703,179

METHOD FOR PRODUCING POLYESTERS

Ryosuke Asakura, Chita; Hirohito Nagaiwa, Nagoya, and Masashige Murakami, Ohgaki, all of Japan, assignors to Toray Industries, Inc., Japan

Filed Aug. 8, 1996, Ser. No. 694,108

Claims priority, application Japan, Aug. 28, 1995, 7-219196

Int. Cl.^{6} C08G *63/02;* **C08F** *2/00*

U.S. Cl. 526—99 **6 Claims**

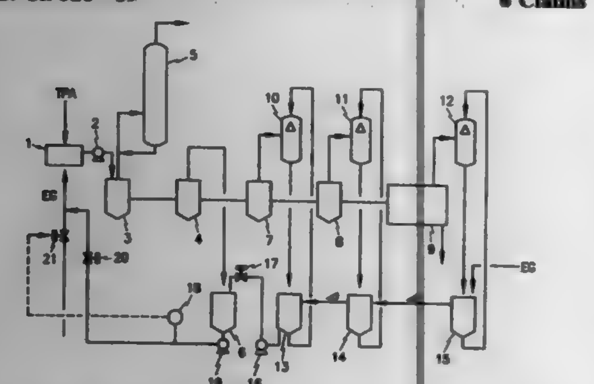

1. A method for producing polyesters wherein raw materials of terephthalic acid and/or its ester-forming derivative, and a glycol and/or its ester-forming derivative are fed to an esterification device where they are esterified to give an oligomeric polyester, and wherein the oligomeric polyester is transferred to a polycondensation device where it is polycondensed to give a polyester; the method comprising the steps of (a) partly or wholly recycling the distillate which is taken out from the esterification device and/or the polycondensation device and which consists essentially of a glycol and/or its ester-forming derivative, and recycling said distillate for introduction with the starting material in the method, and (b) continuously or intermittently measuring the content of at least one of water, said glycol and said ester-forming derivative in said distillate to be recycled, (c) determining the amounts of said raw materials to be fed to the intended reaction device on the basis of content thus measured, and (d) feeding the thus-determined amounts of said raw materials to the reaction device in response to the amounts thus measured.

5,703,180

CATALYST FOR OLEFIN POLYMERIZATION, PROCESS FOR OLEFIN POLYMERIZATION USING THE SAME, ETHYLENE/α-OLEFIN COPOLYMER, GRAFT MODIFIED ETHYLENE/α-OLEFIN COPOLYMER, AND ETHYLENE COPOLYMER COMPOSITION

Toshiyuki Tsutsui; Ken Yoshitsugu; Mamoru Takahashi, and Akira Todo, all of Waki-cho, Japan, assignors to Mitsui Petrochemical Industries, Ltd., Tokyo, Japan

Continuation of Ser. No. 154,462, Nov. 18, 1993, abandoned. This application Mar. 19, 1996, Ser. No. 618,109

Claims priority, application Japan, Nov. 19, 1992, 4-310614; Nov. 19, 1992, 4-310629; Nov. 19, 1992, 4-310630; Nov. 19, 1992, 4-310631

Int. Cl.^{6} C08F *4/655*

U.S. Cl. 526—119 **25 Claims**

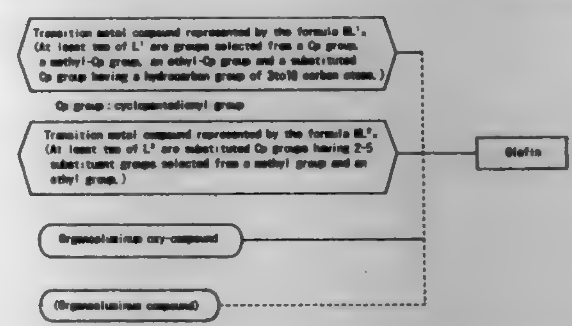

3. A process for olefin polymerization, comprising polymerizing an olefin in the presence of a catalyst for olefin polymerization comprising:

(a) an aluminoxane compound,

(b-I) at least one transition metal compound represented by the following formula (I):

$$ML^1_x \qquad (I)$$

wherein M is a transition metal atom selected from Group IVB of the periodic table, L^1 is a ligand coordinating to the transition metal atom M, at least two of L^1 are groups selected from the group consisting of a substituted cyclopentadienyl group having two or more substituents, wherein at least one substituent is selected from a hydrocarbon group having 3 to 10 carbon atoms, and the other substituents are selected from the group consisting of methyl and ethyl, L^1 other than the cyclopentadienyl group is a hydrocarbon group of 1 to 12 carbon atoms, an alkoxy group, an aryloxy group, a trialkylsilyl group, a halogen atom or a hydrogen atom, and X is the valence of the transition metal atom M, and

(b-II) at least one transition metal compound represented by the following formula (II):

$$ML^2_x \qquad (II)$$

wherein M is a transition metal atom selected from Group IVB of the periodic table, L^2 is a ligand coordinating to the transition metal atom, at least two of L^2 are substituted cyclopentadienyl groups having 2 or 3 substituent groups, said substituent groups being selected from the group consisting of a methyl group and an ethyl group, L^2 other than the cyclopentadienyl group is a hydrocarbon group of 1 to 12 carbon atoms, an alkoxy group, an aryloxy group, a trialkylsilyl group, a halogen atom or a hydrogen atom, and X is the valence of the transition metal atom M, and the molar ratio (b-I)/(b-II) is in the range of 99/1 to 50/50.

4. The process for olefin polymerization of claim 3, wherein the (b-I) formula I transition metal compound is bis(1,3-n-butylmethylcyclopentadienyl)zirconium dichloride and the (b-II) formula (II) transition metal compound is bis(1,3-dimethylcyclopentadienyl)zirconium dichloride, and the molar ratio of (b-I)/(b-II) is in the range of 90/10 to 80/20.

5,703,181

CATALYST OLEFIN POLYMERIZATION AND PROCESS FOR OLEFIN POLYMERIZATION USING THE SAME

Takashi Tashiro, and Takashi Ueda, both of Waki-cho, Japan, assignors to Mitsui Petrochemical Industries, Ltd., Tokyo, Japan

Continuation of Ser. No. 153,371, Nov. 16, 1993, abandoned. This application Jan. 16, 1996, Ser. No. 585,812

Claims priority, application Japan, Nov. 18, 1992, 4-309087; Dec. 3, 1992, 4-324510

Int. Cl.^{6} C08F *4/649;4/648;10/00*

U.S. Cl. 526—140 **3 Claims**

1. A process for olefin polymerization comprising polymerizing an olefin in the presence of a catalyst for olefin polymerization comprising:

(A) a compound of a transition metal in Group IVB of the Periodic Table, which is represented by the following formula (I'):

$$R^1_aR^2_bR^3_cR^4_dM$$

wherein M is zirconium; R^1 is a ligand having a cyclopentadienyl skeleton; R^2, R^3 and R^4 are each a ligand having a cyclopentadienyl skeleton, an alkyl group, a cycloalkyl group, an aryl group, an aralkyl group, an alkoxy group, an aryloxy group, a trialkylsilyl group, SO_3R (wherein R is a hydrocarbon group of 1 to 8 carbon atoms or a substituted hydrocarbon group of 1 to 8 carbon atoms), a halogen atom or hydrogen atom, a is an integer of not less than 1; and a+b+c+d=4, and wherein at least one of R^2, R^3 and R^4 is the ligand having the cyclopentadienyl skeleton;

(B) an organoaluminum compound; and

(C) a Brønsted acid which is a polystyrene strongly acidic cation-exchange resin having SO_3OH groups.

5,703,182

PROCESS FOR THE PRODUCTION OF POLYISOOLEFINS BY MEANS OF NOVEL METALLOCENE TYPE INITIATOR SYSTEMS

Gerhard Langstein, Kürten, Germany; Manfred Bochmann, Norwich, and David M. Dawson, Buckinghamshire, both of Great Britain, assignors to Bayer AG, Leverkusen, Germany

Filed Jan. 27, 1997, Ser. No. 789,466

Claims priority, application Germany, Jan. 31, 1996, 196 03 331.4

Int. Cl.^{6} C08F *4/52;10/10*

U.S. Cl. 526—185 **9 Claims**

1. Process for the production of polyisoolefins, comprising the step of polymerizing isoolefins of the formula $CH_2{=}CR^1R^2$, where R^1 means methyl and R^2 means C_1–C_{10}alkyl or C_3–C_{10}cycloalkyl, optionally together with conjugated or unconjugated dienes having 4 to 20 carbon atoms and/or cationically polymerisable, mono- or polyunsaturated compounds having 4 to 20 carbon atoms, in solution, in suspension or in the gas phase at temperatures of −100° C. to +200° C. and pressures of 0.1 to 100 bar in the presence of initiator systems consisting of the following components:

A) Cp'_2AlR^3 and

B) $BR^4R^5R^6$,

in which

Cp' is an optionally substituted cyclopentadienyl residue,

R^3 denotes C_1–C_{10}alkyl or C_3–C_{10}cycloalkyl and

R^4, R^5 and R^6 have the meaning of R^3 or represent C_6–C_{18}aryl groups which may be mono- or polysubstituted by halogen.

5,703,183

CARBOCATIONIC CATALYSTS AND PROCESS FOR USING SAID CATALYSTS

Timothy Daniel Shaffer, Dickinson, Tex., assignor to Exxon Chemical Patents Inc., Houston, Tex.

Continuation of Ser. No. 470,286, Jun. 6, 1995, abandoned, which is a division of Ser. No. 306,338, Sep. 15, 1994, abandoned. This application Sep. 16, 1996, Ser. No. 716,852

Int. Cl.^{6} C08F *4/52;4/80;10/00;12/06;10/08*

U.S. Cl. 526—189 **15 Claims**

1. A process for producing a polymer comprising contacting under polymerization conditions one or more olefinic, iso-olefinic, di-substituted olefinic or styrenic monomers with a catalyst composition comprising:

an initiator; and

a Lewis acid co-initiator comprising one or more of organometal alkoxide mono halides, organometal phenoxide mono halides or organometal carboxyl mono halides wherein the metal is selected form the group consisting of aluminum, boron, gallium, vanadium, chromium, manganese, iron, cobalt, nickel, copper, zinc, tin and indium.

5,703,184

PROCESS FOR PRODUCING STYRENIC POLYMER

Masayuki Fujita, Ichihara, and Takahiro Ishii, Sodegaura, both of Japan, assignors to Sumitomo Chemical Company, Limited, Osaka, Japan

Filed Mar. 29, 1996, Ser. No. 624,989

Claims priority, application Japan, Mar. 31, 1995, 7-075624

Int. Cl.^{6} C08F *112/08*

U.S. Cl. 526—220 **15 Claims**

1. A process for producing a styrenic polymer having a wide molecular weight distribution, which comprises;

adding to a styrenic monomer or a styrenic monomer and a monomer copolymerizable with the styrenic monomer, based on the total monomer, 50 to 5000 ppm by weight of at least one compound (A) selected from the group consisting of compounds having a dithiocarbamate group, sulfide compounds having at least one of an aryl group, an arylalkyl group and a thiazole group, and

polymerizing said monomer in the absence of a radical initiator at a temperature of 110° to 180° C. to a final conversion of 40% by weight or more, said polymerization being carried out by a suspension polymerization, a batchwise bulk polymerization or a continuous bulk polymerization using a plug flow type polymerization reactor, wherein the styrenic polymer is produced having a molecular weight distribution of 2.5 or greater.

2. A process for producing a styrenic polymer having a wide molecular weight distribution, which comprises;

adding to a styrenic monomer or a mixture of styrenic monomer and a monomer copolymerizable with the styrenic monomer, based on the total monomer, 50 to 5000 ppm by weight of at least one compound (A) selected from the group consisting of compounds having a dithiocarbamate group, sulfide compounds having at least one of an aryl group, an arylalkyl group and a thiazole group, based on the total monomer, and

polymerizing the monomer in the presence of a radical initiator at a temperature of 90° to 160° C. to a final conversion of 40% by weight or more, said polymerization being carried out by a suspension polymerization, a batchwise bulk polymerization or a continuous bulk polymerization using a plug flow type polymerization reactor, wherein the styrenic polymer is produced having a molecular weight distribution of 2.5 or greater.

5,703,185

FLUOROPOLYMER EXTRUSION PROCESS

Leslie Mitchell Blair, Parkersburgh, W. Va., assignor to E. I. Du Pont de Nemours and Company, Wilmington, Del.

Filed Jul. 23, 1996, Ser. No. 685,083

Int. Cl.[6] C08F *16/24*

U.S. Cl. 526—247 4 Claims

1. A process comprising extruding and melt drawing a tetrafluoroethylene copolymer resin to form insulation on an electrical conductor, wherein said copolymer is partially-crystalline copolymer comprising tetrafluoroethylene, hexafluoropropylene in an amount corresponding to HFPI of from 2.0 to about 5.3, and from 0.2% to 3% by weight of perfluoro(ethyl vinyl ether).

5,703,186

MIXED POLYMERS

Recai Sezi, Roettenbach; Horst Borndoerfer, Erlangen; Hellmut Ahne, Roettenbach; Siegfried Birkle, Hoechstadt A/Aisch; Eberhard Kuehn, Hemhofen; Rainer Leuschner, Erlangen; Eva Rissel, Forchheim, and Michael Sebald, Hessdorf-Hannberg, all of Germany, assignors to Siemens Aktiengesellschaft, Munich, Germany

Division of Ser. No. 434,955, May 4, 1995, Pat. No. 5,616,667, which is a continuation of Ser. No. 153,836, Nov. 17, 1993, abandoned, which is a continuation of Ser. No. 811,831, Dec. 20, 1991, abandoned. This application Sep. 23, 1996, Ser. No. 717,652

Claims priority, application Germany, Dec. 20, 1990, 40 41 000.5

Int. Cl.[6] C08F *222/04;222/08;220/18*

U.S. Cl. 526—272 9 Claims

1. A non-grafted terpolymer characterized by 40 to 99 mole % of a tert. butyl ester of an unsaturated carboxylic acid as a first component, 1 to 60 mole % of an anhydride of an unsaturated carboxylic acid as a second component and an unsaturated aromatic compound as a third component.

5,703,187

PSEUDO-RANDOM COPOLYMERS FORMED BY USE OF CONSTRAINED GEOMETRY ADDITION POLYMERIZATION CATALYSTS

Francis J. Timmers, Midland, Mich., assignor to The Dow Chemical Company, Midland, Mich.

Division of Ser. No. 545,403, Jul. 3, 1990, which is a continuation-in-part of Ser. No. 401,345, Aug. 31, 1989, abandoned, Ser. No. 401,344, Aug. 31, 1989, abandoned, Ser. No. 428,082, Oct. 27, 1989, abandoned, Ser. No. 428,283, Oct. 27, 1989, abandoned, Ser. No. 428,276, Oct. 27, 1989, abandoned, and Ser. No. 520,168, May 9, 1990, abandoned, which is a continuation of Ser. No. 436,524, Nov. 14, 1989, abandoned. This application Jun. 6, 1995, Ser. No. 469,828

Int. Cl.[6] C08F *210/02*

U.S. Cl. 526—282 13 Claims

1. A pseudo-random copolymer comprising an olefin and a hindered vinylidene monomer corresponding to the formula: $CG_2=CG'R'''$, wherein,

R''' is R" or an aryl substituent of up to 20 carbons,

R" is t-butyl, norbornyl, or an alicyclic substituent of up to 20 carbons,

G independently each occurrence is hydrogen or methyl, and

G' independently each occurrence is hydrogen or methyl or alternatively G' and R''' together form a ring system said copolymer having a weight average molecular weight (Mw) greater than 13,000 and a hindered vinylidene monomer content of at least 1.0 mole percent.

5,703,188

PROCESS FOR REMOVING BILE SALTS FROM A PATIENT AND COMPOSITIONS THEREFOR

W. Harry Mandeville, III, Lynnfield, and Stephen Randall Holmes-Farley, Arlington, both of Mass., assignors to GelTex Pharmaceuticals, Inc., Waltham, Mass.

Continuation-in-part of Ser. No. 258,477, Jun. 10, 1994, which is a continuation-in-part of Ser. No. 71,564, Jun. 2, 1993, abandoned, and Ser. No. 258,431, Jun. 10, 1994. This application Jun. 7, 1995, Ser. No. 482,969

Int. Cl.[6] C08F *10/00;12/00;30/00;110/00*

U.S. Cl. 526—290 23 Claims

1. A method of synthesizing a crosslinked polymer having hydrophilic and hydrophobic units comprising: polymerizing a mixture comprising a hydrophilic vinylic monomer, a monoreactive hydrophobic vinylic co-monomer and a multifunctional crosslinking co-monomer in an alcoholic solvent under conditions suitable for free radical polymerization.

5,703,189

UNSATURATED NITRILE-CONJUGATED DIENE COPOLYMER, PROCESS FOR PRODUCING SAME AND VULCANIZABLE RUBBER COMPOSITION

Suguru Tsuji, Tokyo, and Yuichi Uchizono, Yokosuka, both of Japan, assignors to Nippon Zeon Co., Ltd., Tokyo, Japan

PCT No. PCT/JP95/01132, § 371 Date Feb. 28, 1997, § 102(e) Date Feb. 28, 1997, PCT Pub. No. WO96/06868, PCT Pub. Date Mar. 7, 1996

PCT Filed Jun. 7, 1995, Ser. No. 793,677

Claims priority, application Japan, Aug. 29, 1994, 6-226099; Sep. 7, 1994, 6-239395; Sep. 7, 1994, 6-239396; Sep. 30, 1994, 6-261364; Sep. 30, 1994, 6-261365

Int. Cl.[6] C08F *236/04;2/38*

U.S. Cl. 526—338 26 Claims

1. An unsaturated nitrile-conjugated diene copolymer having at least 0.03 mole, per 100 moles of the monomeric units constituting the copolymer molecule, of an alkylthio group with 12 to 16 carbon atoms, which include at least three tertiary carbon atoms, and further with a sulfur atom directly bound to at least one of the tertiary carbon atoms; said copolymer having a Mooney viscosity of 15 to 150 and a bound unsaturated nitrile content of 10 to 60% by weight; and the breadth (ΔAN) of compositional distribution of the unsaturated nitrile in the unsaturated nitrile-conjugated diene copolymer being in the range of 3 to 20.

11. A process for producing an unsaturated nitrile-conjugated diene copolymer wherein an unsaturated nitrile and a conjugated dienes are copolymerized in the presence of a molecular weight modifier and a free radical initiator,

characterized in that the molecular weight modifier used is an alkylthiol compound with 12 to 16 carbon atoms, which include at least three tertiary carbon atoms, and further with a sulfur atom directly bound to at least one of the tertiary carbon atoms, and

further in that copolymerization is commenced with 30 to 80% by weight of the total amount of the monomers, and, when the polymerization conversion reaches a value of 20 to 70%, the remainder of the monomers is incorporated in the polymerization mixture.

5,703,190

CROSSLINKABLE COMPOSITIONS

Jochen Dauth, Burghausen; Christian Herzig, Feichten-Waging; Bernward Deubzer, Burghausen; Klaus Schnitzer, Julbach, all of Germany, and David Huettner, Tecumseh, Mich., assignors to Wacker-Chemie GmbH, Munich, Germany

Filed Aug. 23, 1996, Ser. No. 697,359

Claims priority, application Germany, Nov. 7, 1995, 195 41 451.9

Int. Cl.[6] C08G *77/06*

U.S. Cl. 528—12 4 Claims

1. A crosslinkable composition containing

(1) an organosilicon compound having radicals containing aliphatic carbon-carbon multiple bonds, and

(2) an organosilicon compound having Si-bonded hydrogen atoms, or

(3) an organosilicon compound having both radicals with aliphatic carbon-carbon multiple bonds and Si-bonded hydrogen atoms,

(4) a catalyst which promotes the addition of Si-bonded hydrogen onto an aliphatic multiple bond, and

(5) an agent which inhibits the addition of Si-bonded hydrogen onto an aliphatic multiple bond at room temperature, of the formula

$$R^1-C\equiv C-\underset{X}{\overset{R^2}{C}}-(R^3)_x-(\overset{R^4}{C}=\overset{R^5}{C})_y-(R^3)_x-(\overset{R^4}{C}=\overset{R^5}{C})_y-(R^3)_x-(\overset{R^4}{C}=\overset{R^5}{C})_y-R^6 \qquad (I)$$

in which

R^1, R^2, R^4, R^5 and R^6 are identical or different and are a hydrogen atom or a monovalent, substituted or unsubstituted hydrocarbon radical having 1 to 12 carbon atoms per radical,

R^3 is a divalent hydrocarbon radical having 1 to 6 carbon atoms per radical,

X is a radical of the formula —OH, —Cl, Br or —CN, and

x and y are identical or different and are 0 or 1, with the proviso that there is at least one double bond.

5,703,191

METHOD FOR PURIFYING POLYALKYLSILOXANES AND THE RESULTING PRODUCTS

Danny L. Henderson, Wilmington, N.C., and Dale R. Powers, Painted Post, N.Y., assignors to Corning Incorporated, Corning, N.Y.

Filed Dec. 19, 1995, Ser. No. 574,961

Int. Cl.[6] C08G *77/12*

U.S. Cl. 528—31 33 Claims

1. A method of purifying polyalkylsiloxanes comprising:

providing a polyalkylsiloxane starting material containing impurities having boiling points, under atmospheric conditions, of greater than 250° C., in a total concentration of at least 14 ppm; and

distilling the polyalkylsiloxane starting material under conditions effective to produce a purified polyalkylsiloxane composition, having a boiling point, under atmospheric conditions, of less than 250° C., and a total concentration of less than 14 ppm of said impurities having boiling points, under atmospheric conditions, of greater than about 250° C.

5,703,192

POLYORGANOMETALLOSILOXANE-2- OR -4-PYRIDINE COATINGS

Toshifumi Sugama, Wading River, N.Y., assignor to Associated Universities, Inc., Washington, D.C.

Filed Nov. 29, 1995, Ser. No. 563,977

Int. Cl.[6] C08G *77/26*

U.S. Cl. 528—39 17 Claims

1. A compound comprising an organometallic polymer having a repeating monomer of the formula

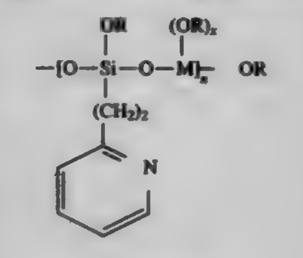

I OR

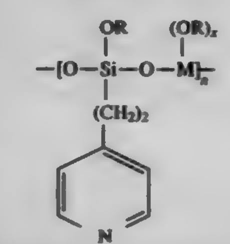

II

wherein M is a metal derived from an organometallic moiety, said organometallic moiety selected from the group consisting of a metal alkoxide, a metallocene and a metallophtalocyanine, R is CH_3, C_2H_5 or C_3H_7, x is 0, 1 or 2 and n is equal to or greater than 100.

5,703,193

REMOVAL OF UNREACTED DIISOCYANATE MONOMER FROM POLYURETHANE PREPOLYMERS

Ronald Owen Rosenberg, Shelton; Ajaib Singh, Huntington, both of Conn.; Christopher James Maupin, Aurora, Ill., and Brian Scott Lombardo, Ansonia, Conn., assignors to Uniroyal Chemical Company, Inc., Middlebury, Conn.

Filed Jun. 3, 1996, Ser. No. 657,135

Int. Cl.[6] C08G *18/10*

U.S. Cl. 528—44 15 Claims

1. A process for reducing the amount of residual organic diisocyanate monomer in a polyurethane prepolymer reaction product mixture which comprises heating the polyurethane prepolymer reaction product mixture in the presence of a combination of at least one inert first solvent with a boiling point below the boiling point of the residual organic diisocyanate monomer selected from the group consisting of dimethyl glutarate, dimethyl adipate, diethyl adipate, diisopropyl adipate, ortho-, meta-, or para-dichlorobenzene. 1,2,3-trichlorobenzene, 1,2,4-trichlorobenzene, γ-butyrolactone, and dimethyl succinate, and at least one inert second solvent with a boiling point above the boiling point of the residual organic diisocyanate monomer selected from the group consisting of dimethylphthalate, diethylphthalate, and an isomer of dibutyladipate, at a temperature which exceeds the vaporization temperature of the residual organic diisocyanate monomer and which is below the decomposition temperature of the polyurethane prepolymer, wherein the combination of the first solvent and the second solvent comprises about 5 to about 85 percent by weight of the total weight of the polyurethane prepolymer reaction product mixture plus the solvents, and wherein the ratio of the first solvent to the second solvent is from about 20:1 to about 1:20.

5,703,194

FLUORINATED THERMOSET POLYURETHANE ELASTOMERS PREPARED FROM POLYETHER COPREPOLYMERS FORMED FROM MONO-SUBSTITUTED FLUORINATED OXETANE MONOMERS AND TETRAHYDROFURAN

Aslam A. Malik, Cameron Park, and Thomas G. Archibald, Fair Oaks, both of Calif., assignors to Aerojet-General Corporation, Sacramento, Calif.

Division of Ser. No. 371,914, Jan. 12, 1995, abandoned, which is a continuation-in-part of Ser. No. 206,618, Mar. 7, 1994, abandoned, which is a continuation of Ser. No. 80,614, Jun. 21, 1993, abandoned, which is a continuation-in-part of Ser. No. 911,461, Jul. 10, 1992, abandoned. This application Jun. 7, 1995, Ser. No. 483,220

Int. Cl.⁶ C08G *18/28; 18/50*

U.S. Cl. 528—70 **3 Claims**

1. A fluorinated thermoset polyurethane elastomer having random FOX/THF segments and having the structure,

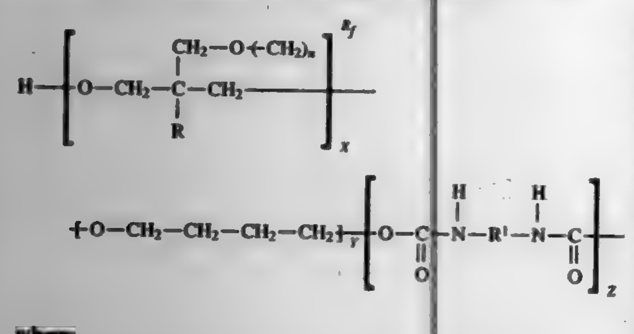

where:

a) n is 1–3;

b) R is selected from the group consisting of methyl and ethyl;

c) R_f is selected from the group consisting of linear and branched perfluorinated alkyls having 1–20 carbons, and oxaperfluorinated polyethers having from about 4–20 carbons;

d) R^1 is a divalent hydrocarbyl radical;

e) X is 1–20;

f) Y is 10–150;

g) Z is 2–50.

5,703,195

POLYGLYCIDYLPHENYL ETHERS OF ALKYLENE OR ALKYLENEOXY CHAINS FOR USE IN MICROELECTRONICS ADHESIVES

Rose Ann Schultz, Princeton, and Steven P. Fenelli, Hillsborough, both of N.J., assignors to National Starch and Chemical Investment Holding Corporation, Wilmington, Del.

Division of Ser. No. 656,597, May 31, 1996, Pat. No. 5,646,315, which is a continuation-in-part of Ser. No. 482,541, Jun. 7, 1995, abandoned. This application Nov. 27, 1996, Ser. No. 757,187

Int. Cl.⁶ C08L *63/00;* **C07D** *303/28*

U.S. Cl. 528—103 **3 Claims**

1. A flexible epoxy compound, characterized in that it has a total chlorine content of less than 0.1% by weight, having the structural formula:

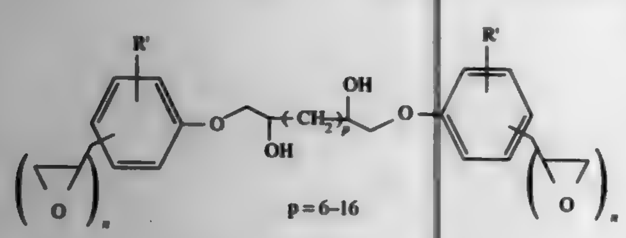

in which:

R' is H, C_{1-18}alkyl, C_{1-5}alkoxy or aryl or alkylaryl, C_{1-5}perfluoroalkyl, or C_{1-5}acyl; and

n is an integer 1–3; and

p is an integer 6–16.

5,703,196

PROCESS FOR PRODUCING POLYCARBONATE HAVING TERMINAL HYDROXYL GROUPS

Shinji Funakoshi, Kawasaki, and Kenzou Kawai, Yokohama, both of Japan, assignors to Asahi Kasei Kogyo Kabushiki Kaisha, Osaka, Japan

PCT No. PCT/JP95/00687, § 371 Date Oct. 8, 1996, § 102(e) Date Oct. 8, 1996, PCT Pub. No. WO95/27749, PCT Pub. Date Oct. 19, 1995

PCT Filed Apr. 7, 1995, Ser. No. 718,514

Claims priority, application Japan, Apr. 8, 1994, 6-071045

Int. Cl.⁶ C08G *64/00*

U.S. Cl. 528—196 **18 Claims**

1. A process for producing a polycarbonate having terminal hydroxyl groups obtained by reacting an aliphatic polyol with a carbonate monomer selected from the group consisting of a dialkyl carbonate, a diaryl carbonate and an alkylene carbonate, which comprises a first step of producing a low molecular weight polycarbonate while removing alcohols produced as by-products from the reaction mixture containing said aliphatic polyol and said carbonate monomer and a second step of adding to the reaction mixture in the first step said carbonate monomer in portions or continuously under the conditions that the concentration of the aliphatic polyol in the reaction mixture in the first step is 5% by weight or less and subjecting the resulting mixture to reaction while removing the alcohols produced as by-products to connect the low molecular weight polycarbonates to one another through the carbonate monomer, thereby increasing the molecular weight.

5,703,197

INDANE POLYCARBONATES

Janet L. Gordon, Clifton Park, and David G. Gascoyne, Schenectady, both of N.Y., assignors to Molecular OptoElectronics Corporation, Watervliet, N.Y.

Filed Feb. 13, 1997, Ser. No. 798,756

Int. Cl.⁶ C08G *63/00*

U.S. Cl. 528—201 **10 Claims**

1. A linear indane polycarbonate polymer having a glass transition temperature of at least 151° C., said polymer comprising structural units having the formulas

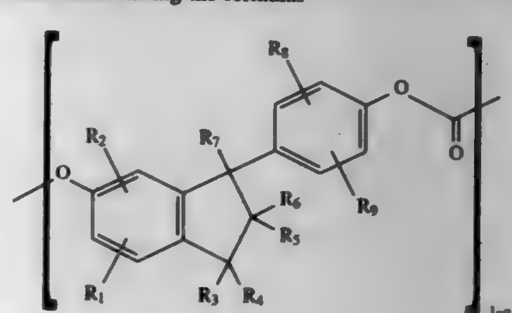

(I

and

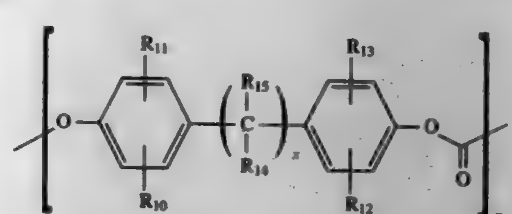

(II

wherein n is the mole fraction of structure II and has a value from about 0 to about 0.99;

R_1, R_2, R_3, R_4, R_5, R_6, R_7, R_8, R_9, R_{10}, R_{11}, R_{12}, R_{13}, R_{14} and R_{15} are each independently hydrogen, deuterium, alkyl, cycloalkyl, alkenyl, cycloalkenyl, aryl, alkoxyaryl, alkylaryl, arylalkyl, alkoxy, alkoxyalkyl, aryloxyalkyl, haloalkyl, haloaryl, nitro, halogen, cyano, hydroxy or deuterated equivalents thereof; and

x is 0 or 1.

5,703,198

RADIATION CURABLE BINDER COMPOSITION FOR POWDER PAINT FORMULATIONS

Freddy Twigt, Genemuiden, and Robert Van Der Linde, Zwolle, both of Netherlands, assignors to DSM N.V., Heerlen, Netherlands

Continuation of Ser. No. 281,972, Jul. 29, 1994, abandoned. This application Jul. 24, 1995, Ser. No. 506,615

Claims priority, application Belgium, Jul. 30, 1993, 09300794

Int. Cl.⁶ C08G *63/52*

U.S. Cl. 528—303 **14 Claims**

1. A powder paint containing a radiation curable binder composition for powder paint formulations comprising:

a polymer having unsaturated groups, said polymer having a degree of unsaturation between about 300 grams and about 1,800 grams of polymer per mole of unsaturated group, a molecular weight, Mn, between 800 and 6,800 g/mol, and a viscosity between about 1 dPas and about 800 dPas; and

a crosslinking agent having at least two functional groups selected from the group consisting of vinyl ether, vinyl ester, and (meth)acrylate functional groups, wherein said polymer and crosslinking agent are selected so that said composition is in solid particle form.

5,703,199

PROCESS FOR THE PREPARATION OF NITROGEN-CONTAINING POLYMERS

Andree Henze, Hofheim, Germany, and Gordon Calundann, North Plainfield, N.J., assignors to Hoechst Aktiengesellschaft, Frankfurt, Germany

Filed Oct. 5, 1995, Ser. No. 539,481

Claims priority, application Germany, Oct. 7, 1994, P 44 35 873.3

Int. Cl.⁶ C08G *69/36*

U.S. Cl. 528—329.1 **7 Claims**

1. A process for the preparation of a nitrogen-containing polymer in which a polyvalent carboxylic acid and diamine and/or aminocarboxylic acid or a reactive derivative thereof are reacted in a high-boiling inert solvent with the addition of a heat-stable dispersing auxiliary, the volatile by-products formed in this reaction are distilled off and, when the reaction has ended, the batch is cooled and the polymer formed is filtered off, which comprises employing aromatic starting subetances.

5,703,200

ABSORBABLE COPOLYMERS AND BLENDS OF 6,6-DIALKYL-1,4-DIOXEPAN-2-ONE AND ITS CYCLIC DIMER

Rao S. Bezwada, Whitehouse Station; Steven C. Arnold, Sparta, and Constance Ace, Whitehouse, all of N.J., assignors to Ethicon, Inc., Somerville, N.J.

Filed Mar. 15, 1996, Ser. No. 616,799

Int. Cl.⁶ C08L *71/02*

U.S. Cl. 528—354 **62 Claims**

1. A copolymer comprising a first repeating unit of the chemical formula:

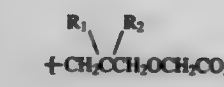

in which R_1 and R_2 are independently alkyl groups selected from the group consisting of methyl, ethyl and propyl groups and a second repeating unit is generated from a monomer selected from the group of glycolic acid, lactic acid, glycolide, lactide (1, d, dl and meso), 3-methyl-1,4-dioxan-2,5-dione, 3,3-diethyl-1,4-dioxan-2,5-one, 1,4-dioxan-2-one, 1,4-dioxepan-2-one, 1,5-dioxepan-2-one, delta-valerolactone, epsilon-decalactone, pivalolactone, gamma-butyrolactone, ethylene carbonate, 1,3-dioxan-2-one, 4,4-dimethyl-1,3-dioxan-2-one, epsilon-caprolactone and combinations thereof and the first repeating unit is less than 45 weight percent of the total weight of the copolymer.

5,703,201

CATALYST FOR POLYMERIZATION OF POLYKETONE FORMED BY TREATMENT WITH CARBON MONOXIDE AND OLEFIN

Paul K. Hanna, East Windsor, N.J., assignor to Akzo Nobel nv, Arnhem, Netherlands

Filed Oct. 10, 1995, Ser. No. 541,835

Int. Cl.⁶ C08G *67/02*

U.S. Cl. 528—392 **18 Claims**

1. A process for the synthesis of a catalyst for the polymerization of carbon monoxide and at least one olefin which comprises treating a mixture of a compound of palladium and an anion, which is effective in the catalyst for such polymerization, with carbon monoxide and an olefin followed by reaction of the resulting composition with a bidentate ligand reagent.

5,703,202

PROCESS FOR TREATING LIQUID CRYSTAL POLYMER FILM

Randy Douglas Jester, Greer; John Arthur Penoyer, Greenville; Douglas Duane Roth, Taylors, all of S.C.; Detlef Frank, Mainz, Germany; Minoru Onodera, Kurashiki, Japan; Takeichi Tsudaka, Kurashiki, Japan; Toshiaki Sato, Kurashiki, Japan, and Tohei Moritani, Toyonaka, Japan, assignors to Hoechst Celanese Corp, Somerville, N.J., and Kuraray Co. Ltd., Japan

Division of Ser. No. 307,993, Sep. 16, 1994, Pat. No. 5,529,740. This application Apr. 2, 1996, Ser. No. 627,493

Int. Cl.⁶ C08J *5/18*

U.S. Cl. 528—481 **10 Claims**

1. A heat-treated polymer film made by the process comprising the steps of:

(a) heating a film made by the extrusion molding of a polymer capable of forming an optically anisotropic melt phase while contacting at least one surface of said film with a supporting body, to a temperature sufficient to melt said polymer;

(b) cooling the melted polymer to form a solidified polymer layer; and

(c) separating said solidified polymer layer from said supporting body; said heat-treated polymer film having an intra-layer peeling strength measured by conducting a 90° peeling test in accordance with JIS C6471 of at least 2 kg/cm; a tensile strength measured in accordance with JIS C2318 of at least 5 kg/mm²; a thermal expansion coefficient that is positive when measured along four different lines in the film plane, wherein each of said four lines passes through a common point on the film plane, with the second line being at an angle of 45° with respect to the first line, with the third line being at an angle of 45° with respect to the second line, and with the fourth line being at an angle of 45° with respect to the third line; and a

dimensional change ratio when heated of not more than 0.1% in its absolute value, wherein said ratio is $[(L_1-L_0)/L_0]\times100\%$, where L_0 is the length of a film sample measured at 25° C. and L_1 is the length of the same film sample measured at 25° C. after being heated in air at 190° C. for 30 minutes under no tension; and a degree of planar orientation of 50 to 70% as measured by x-ray diffractometry.

5,703,203

REMOVAL OF OLIGOMERS FROM SUBSTANTIALLY CRYSTALLINE, α-OLEFIN POLYMERS

Richard J. Fezza, Wilmington, and Stephen D. Williams, Newark, both of Del., assignors to Montell North America Inc., Wilmington, Del.

Filed Mar. 31, 1995, Ser. No. 414,870

Int. Cl.[6] C08F *6/04*

U.S. Cl. 528—483 **6 Claims**

1. A method for stripping oligomers from finely divided, substantially crystalline, α-olefin polymer particles containing oligomers at a concentration of at least 250 parts by weight per million parts by weight of the polymer, which method comprises:

establishing a bed comprising said particles at a temperature sufficient to evaporate oligomers from said particles, but insufficient to cause said particles to become sticky to the extent they tend to substantially agglomerate and to adhere to walls and the like,

fluidizing said bed by passing through said bed at a bed fluidizing velocity a stream of gas inert to said particles and oligomers under prevailing conditions, whereby evaporated oligomers are removed from the bed, and

maintaining said particles at a temperature of 100° to about 140° C. for a period of about 1 hour to about 1 hours, sufficient for a substantial portion of said oligomers in said particles to evaporate therefrom,

the temperature and period of time being selected according to the proportion and maximum chain length of the oligomers to be stripped from the particles.

5,703,204

METHOD FOR REPROCESSING AQUEOUS EXTRACT SOLUTIONS OBTAINED IN THE PRODUCTION OF PA 6 OR COPOLYAMIDE

Andreas Gittinger; Claus Wulff; Heinrich Haupt, and Karsten-Josef Idel, all of Krefeld, Germany, assignors to Bayer AG, Leverkusen, Germany

Filed May 20, 1996, Ser. No. 650,384

Claims priority, application Germany, May 31, 1995, 195 19 819.6

Int. Cl.[6] C08F *6/00;* **C08G** *69/14*

U.S. Cl. 528—486 **10 Claims**

1. A method for reprocessing aqueous extract solutions obtained in the production of polyamide 6 or copolyamides containing not less than 70% by weight of repeating units derived from ε-caprolactam, which comprises obtaining and concentrating an aqueous extract solution, and adding 0.02 to 20 mmol of dicarboxylic acid or polycarboxylic acids per kg extract (dry matter) to the extract prior to, during or after concentration.

5,703,205

LAMININ A CHAIN POLYPEPTIDES FROM THE AMINO TERMINAL GOLBULAR DOMAIN

Amy P. N. Skubitz, and Leo T. Furcht, both of Minneapolis, Minn., assignors to Regents of the University of Minnesota, Minneapolis, Minn.

Continuation of Ser. No. 895,252, Jun. 8, 1992, Pat. No. 5,276,136, which is a continuation of Ser. No. 646,291, Jan. 25, 1991, abandoned. This application Jun. 7, 1993, Ser. No. 72,283

Int. Cl.[6] A61K *38/00;* **C07K** *7/00;7/10;7/06*

U.S. Cl. 530—324 **1 Claim**

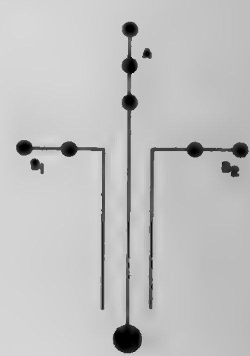

1. A laminin polypeptide fragment having a sequence of at least five amino acids corresponding substantially to an amino acid sequence from residues 1–158 or residues 204–251 within domain VI of the A chain of laminin, wherein said polypeptide promotes cell adhesion.

5,703,206

MACROPHAGE INFLAMMATORY PROTEIN 2 (MIP-2)

Stephen D. Wolpe, 88 Lake St., Arlington, Mass. 02174; Anthony Cerami, Ram Island Dr., Shelter Island, N.Y. 11964, and Barbara Sherry, 325 E. 84th St., New York, N.Y. 10021

Continuation of Ser. No. 105,105, Aug. 10, 1993, abandoned, which is a continuation of Ser. No. 914,045, Jul. 13, 1992, abandoned, which is a continuation of Ser. No. 399,971, Sep. 1, 1989, abandoned, which is a continuation-in-part of Ser. No. 240,078, Sep. 2, 1988, abandoned, which is a continuation-in-part of Ser. No. 104,827, Oct. 2, 1987, abandoned, which is a continuation-in-part of Ser. No. 766,852, Aug. 16, 1985, abandoned, which is a continuation-in-part of Ser. No. 414,098, Sep. 7, 1982, Pat. No. 4,603,106, which is a continuation-in-part of Ser. No. 351,290, Feb. 22, 1982, abandoned, which is a continuation-in-part of Ser. No. 299,932, Sep. 8, 1981, abandoned. This application Aug. 3, 1994, Ser. No. 285,498

Int. Cl.[6] C07K *14/52;* **C12N** *15/19*

U.S. Cl. 530—324 **12 Claims**

1. An inflammatory cytokine in purified form which elutes from a heparin affinity column in a 0–2M NaCl gradient at 0.75M NaCl, is cationic under physiological conditions, and is characterized by inducing localized inflammation characterized by polymorphonuclear cell infiltration when administered subcutaneously and having potent in vitro chemotactic cell activity while inducing little or no in vitro chemokinesis in polymorphonuclear cells, while lacking the ability to suppress the activity of the anabolic enzyme lipoprotein lipase, cause the cytotoxicity of cachectin/TNF-sensitive cells, stimulate the blastogenesis of endotoxin-resistant C3H/HeJ thymocytes, or induce the production of cachectin/TNF by primary thioglycollate-elicited mouse macrophage cells, which cytokine has as apparent molecular mass of approximately 6000 Daltons by SDS-PAGE, and fractionates from a gel filtration column with an apparent molecular mass of approximately 10,000 Daltons.

5,703,207

PROTEIN ACTIVE IN HUMORAL HYPERCALCEMIA OF MALIGNANCY-PTHRP

Thomas J. Martin, Kew; Jane M. Moseley, North Balwyn; Bruce E. Kemp, Kew, and Richard E. H. Wettenhall, Camberwell, all of Australia, assignors to The University of Melbourne, Victoria, Australia

Division of Ser. No. 715,280, Jun. 14, 1991, Pat. No. 5,460,978, which is a division of Ser. No. 199,235, Mar. 18, 1988, Pat. No. 5,116,952. This application Dec. 9, 1994, Ser. No. 352,622

Claims priority, application Australia, Jul. 18, 1986, PH 7027/86; Feb. 13, 1987, PI 0349/87

Int. Cl.[6] C07K *14/635;7/06;7/08;9/00*

U.S. Cl. 530—324 **3 Claims**

1. A substantially pure fragment of parathyroid hormone related protein (PTHrP) which comprises at least amino acids 1–16 of PTHrP, wherein PTHrP amino acids 1–34 comprise the sequence: A V S E H Q L L H D K G K S I Q D L R R R F F L H H L I A E I H T A.

5,703,208

3-AMINO-2-OXO-1-PIPERIDINEACETIC DERIVATIVES AS ENZYME INHIBITORS

Joseph Edward Semple, San Diego; Robert John Ardecky, Encinitas; Ruth Foelsche Nutt; William Charles Ripka, both of San Diego; David C. Rowley, Encinitas; Marguerita S. L. Lim-Wilby, La Jolla, and Terence Kevin Brunck, San Diego, all of Calif., assignors to Corvas International, Inc., San Diego, Calif.

Continuation-in-part of Ser. No. 261,378, Jun. 17, 1994, abandoned, and Ser. No. 356,831, Dec. 13, 1994, abandoned. This application Jun. 7, 1995, Ser. No. 484,720

Int. Cl.[6] A61K *38/06;38/00;* **C07D** *225/02;* **C07F** *9/06*

U.S. Cl. 530—331 **38 Claims**

1. A compound of the formula:

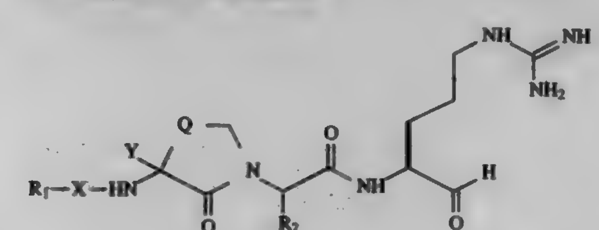

wherein

(a) X is selected from the group consisting of —S(O)$_2$—, —N(R')—S(O)$_2$—, —(C=O)—, —OC(=O)—, —NH—C(=O)—, —P(O)(R")— and a direct link, wherein R' is hydrogen, alkyl of 1 to about 4 carbon atoms, aryl of about 6 to about 14 carbon atoms or aralkyl of about 6 to about 16 carbon atoms, and R" is NR', OR', R', or SR', with the proviso that R" is not NH, OH, H, or SH, and;

(b) R_1 is selected from the group consisting of:

(1) alkyl of 1 to about 12 carbon atoms,

(2) alkyl of 1 to about 3 carbon atoms substituted with cyclic alkyl of about 5 to about 8 carbon atoms, which optionally is substituted in the ring carbons with hydroxyl, amino, guanidino, amidino, or alkoxyl or alkyl each of which having 1 to about 3 carbons,

(3) cyclic alkyl of 3 to about 15 carbon atoms, which optionally is substituted in the ring carbons with hydroxyl, amino, guanidino, amidino, or alkoxyl or alkyl each of which having 1 to about 3 carbons,

(4) heterocycloalkyl of 4 to about 10 ring atoms with the ring atoms selected from carbon and heteroatoms, wherein the heteroatoms are selected from the group consisting of oxygen, nitrogen, and S(O)$_i$, wherein i is 0, 1, or 2, optionally substituted in the ring carbons with hydroxyl, alkoxyl or alkyl each of which having 1 to about 3 carbons, amino, guanidino, or amidino,

(5) heterocyclo of 4 to about 10 ring atoms with the ring atoms selected from carbon and heteroatoms, wherein the heteroatoms are selected from the group consisting of oxygen, nitrogen, and S(O)$_i$, wherein i is 0, 1, or 2, optionally substituted in the ring carbons with hydroxyl, alkoxyl or alkyl each of which having 1 to about 3 carbons, amino, guanidino, or amidino,

(6) alkenyl of about 3 to about 6 carbon atoms which is optionally substituted with cyclic alkyl of about 5 to about 8 carbon atoms, which optionally is substituted in the ring carbons with hydroxyl, amino, guanidino, amidino, or alkoxyl or alkyl each of which having 1 to abut 3 carbons,

(7) aryl of about 6 to about 14 carbon atoms which is optionally mono-, di- or tri-substituted with Y_1, Y_2, and/or Y_3, respectively,

(8) heteroaryl of 5 to 14 atoms with the ring atoms selected from carbon and heteroatoms, wherein the heteroatoms are selected from oxygen, nitrogen, and S(O)$_i$, wherein i is 0, 1, or 2, optionally mono-, di- or tri-substituted with Y_1, Y_2, and/or Y_3, respectively,

(9) aralkyl of about 7 to about 15 carbon atoms which is optionally mono-, di-, or tri-substituted in the aryl ring with Y_1, Y_2, and/or Y_3, respectively,

(10) heteroaralkyl of 6 to 11 atoms with the ring atoms selected from carbon and heteroatoms, wherein the heteroatoms are selected from oxygen, nitrogen, and S(O)$_i$, wherein i is 0, 1, or 2, optionally mono-, di- or tri-substituted with Y_1, Y_2, and/or Y_3, respectively,

(11) aralkenyl of about 8 to about 15 carbon atoms which is optionally mono-, di-, or tri-substituted in the aryl ring with Y_1, Y_2, and/or Y_3, respectively,

(12) heteroaralkenyl of 7 to 12 atoms with the ring atoms selected from carbon and heteroatoms, wherein the heteroatoms are selected from oxygen, nitrogen, and S(O)$_i$, wherein i is 0, 1, or 2, optionally mono-, di- or tri-substituted with Y_1, Y_2, and/or Y_3, respectively,

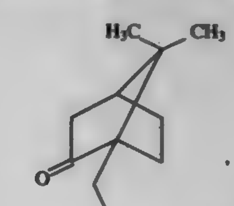

(13)

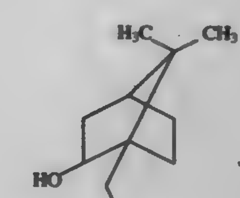

(14)

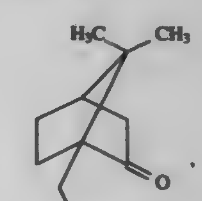

(15)

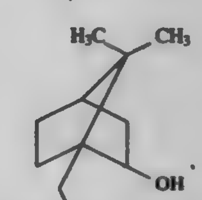

(16)

(17) perfluoroalkyl of 1 to about 12 carbon atoms,

(18) perfluoroaryl of about 6 to about 14 carbon atoms,

(19) perfluoroaralkyl of about 7 to about 15 carbon atoms,

(20) hydrogen, and

(21)

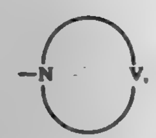 wherein 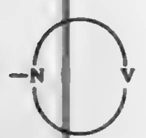

is a 5 to 7 member heterocycle of 3 to 6 ring carbon atoms, where V is —CH_2—, —O—, —S(=O)—, —$S(O)_2$— or —S—, wherein Y_1, Y_2, and Y_3 are

(i) independently selected from the group consisting of hydrogen, halogen, cyano, tetrazolyl, amino, guanidino, amidino, methylamino, and methylguanidino, —CF_3, —CF_2H, —CF_2CF_3, —$CH(CF_3)_2$, —$C(OH)(CF_3)_2$, OCF_3, OCF_2CF_3, —$OC(O)NH_2$, —$OC(O)NHZ_1$, —$OC(O)NZ_1Z_2$, —$NHC(O)Z_1$, —$NHC(O)NH_2$, —$NHC(O)NZ_1$, —$NHC(O)NZ_1Z_2$, —C(O)OH, —$C(O)NH_2$, —$C(O)NHZ_1$, —$C(O)OZ_1$, —$P(O)_3H$, —$P(O)_3H_2$, —$P(O)_3(Z_1)_2$, —$S(O)_3H$, —$S(O)_mZ_1$, —Z_1, —OZ_1, —OH, —NH_2, —NHZ_1, and —NZ_1Z_2, wherein m is 0, 1 or 2, and Z_1 and Z_2 are independently selected from the group consisting of alkyl of 1 to about 12 carbon atoms, aryl of about 6 to about 14 carbon atoms, heteroaryl of about 5 to about 14 atoms having 1 to about 9 carbon atoms, aralkyl of about 7 to about 15 carbon atoms, and heteroaralkyl of about 6 to about 11 atoms having about 3 to about 9 carbon atoms, or

(ii) Y_1 and Y_2 are selected together to be —$OC(Z_3)(Z_4)O$, wherein Z_3 and Z_4 are independently selected from the group consisting of hydrogen, alkyl of 1 to about 12 carbon atoms, aryl of about 6 to about 14 carbon atoms heteroaryl of about 5 to about 14 atoms having 1 to about 9 carbon atoms, aralkyl of about 7 to about 15 carbon atoms, and heteroaralkyl of about 6 to about 11 atoms having about 3 to about 9 carbon atoms,

(c) Q is —$(CH_2)_n$—, wherein n is an integer from 1 to 4, or —$(CH_2)_qR_4$—, wherein q is 1 or 2, and R_4 is —$S(O)_p$—, —O—, —$N(R_5)$—, wherein p is 0, 1, or 2 and R_5 is selected from the group consisting of hydrogen, alkyl of 1 to 4 carbon atoms, and aryl of 1 to 4 carbon atoms;

(d) R_2 is selected from the group consisting of hydrogen, alkyl of 1 to 4 carbon atoms or alkenyl of 2 to 4 carbon atoms; and

(e) Y is selected from the group of R_1 substituents, with the proviso that Y is not

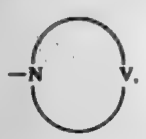

and pharmaceutically acceptable salts thereof.

5,703,209

AMYLOID PRECURSOR PROTEINS AND METHOD OF USING SAME TO ASSESS AGENTS WHICH DOWN-REGULATE FORMATION OF β-AMYLOID PEPTIDE

Michael Peter Vitek, East Norwich, N.Y., and Jack Steven Jacobsen, Ramsey, N.J., assignors to American Cyanamid Company, Madison, N.J.

Division of Ser. No. 123,659, Sep. 20, 1993, which is a continuation-in-part of Ser. No. 877,675, May 1, 1992, abandoned. This application Jun. 5, 1995, Ser. No. 464,248

Int. Cl.⁶ C07K *14/435;14/47;* **C12N** *15/12*

U.S. Cl. 530—350 **3 Claims**

1. A purified and isolated polypeptide encoded by the nucleic acid sequence of a nucleic acid molecule encoding an amyloid precursor mutein comprising a nucleic acid sequence encoding a marker and a nucleic acid sequence encoding about 419 amino acid residues of the APP- 695 isoform, about 475 amino acid residues of the APP-751 isoform or about 494 amino acid residues of the APP-770 isoform, wherein the nucleic acid molecule is an XbaI-SalI fragment of the gene encoding an amyloid precursor protein isoform.

5,703,210

Patent Not Issued For This Number

5,703,211

COLLAGEN FININGS AND PREPARATION THEREOF

Robert Taylor, Shobnall Grange, Shobnall Road, Shobnall, Burton on Trent DE14 2BE, United Kingdom

Filed Mar. 16, 1995, Ser. No. 404,927

Claims priority, application United Kingdom, Mar. 17, 1994, 9405219.S

Int. Cl.⁶ A61K *38/17*

U.S. Cl. 530—356 **28 Claims**

1. A process for preparing collagen finings comprising the steps of providing collagen in the form of fresh undried fish isinglass, freezing the isinglass in the absence of any pre-drying, and hydrolyzing the isinglass under conditions to solubilize the collagen.

5,703,212

PREVENTIVE FOR CIRCULATORY DISEASES

Ryuji Sugai; Umeji Murakami, both of Odawara, and Yukio Yamori, Kyoto, all of Japan, assignors to Kanebo, Ltd., Tokyo, Japan

PCT No. PCT/JP95/00750, § 371 Date Oct. 11, 1996, § 102(e) Date Oct. 11, 1996, PCT Pub. No. WO95/28425, PCT Pub. Date Oct. 26, 1995

PCT Filed Apr. 18, 1995, Ser. No. 727,426

Claims priority, application Japan, Apr. 19, 1994, 6-104480

Int. Cl.⁶ A61K *37/64;35/20;37/16*

U.S. Cl. 530—360 **20 Claims**

1. A preventive for cerebral stroke which comprises a low-molecular-weight peptide fraction available on partial purification of a trypsin digest of casein as an active ingredient.

5,703,213

MONOCLONAL ANTIBODIES WHICH RECOGNIZE AN ADENOCARCINOMA CELL ANTIGEN

Jack R. Wands, Wabun, Mass., and Hiroshi Takahashi, Tokyo, Japan, assignors to The General Hospital Corporation, Boston, Mass.

Continuation of Ser. No. 31,873, Mar. 16, 1993, abandoned, which is a continuation of Ser. No. 857,716, Mar. 25, 1992, abandoned, which is a continuation of Ser. No. 203,182, Jun. 7, 1988, abandoned, which is a continuation-in-part of Ser. No. 130,777, Dec. 9, 1987, abandoned, and Ser. No. 180,913, Apr. 13, 1988, abandoned. This application Feb. 7, 1994, Ser. No. 193,673

Int. Cl.⁶ C12N *5/20;5/12;5/18;* **C07K** *16/30;* **C12P** *21/08*

U.S. Cl. 530—388.85 **10 Claims**

1. A monoclonal antibody, or F(ab) or $F(ab)_2$ fragment thereof, which specifically binds to an adenocarcinoma cell antigen AF-20, and which has the epitope binding specificity of an antibody produced by hybridoma cell line ATCC designation HB 9687.

2. A monoclonal antibody, or F(ab) or $F(ab)_2$ fragment thereof, which specifically binds to an adenocarcinoma cell antigen XF-8, and which has the epitope binding specificity of an antibody produced by hybridoma cell line ATCC designation HB 9686.

5,703,214

Patent Not Issued For This Number

5,703,215

WATER-SOLUBLE DYES WHICH ARE POLYMERIZABLE CONTAINING MOLECULES WHICH CONTAIN A NUCLEOPHILIC GROUP AND AN ELECTROPHILIC GROUP

Andrew Hunter Morris Renfrew, Lancashire, and Andrew Paul Shawcross, Manchester, both of England, assignors to Zeneca Limited, London, England

Division of Ser. No. 158,220, Nov. 29, 1993, Pat. No. 5,474,580. This application May 30, 1995, Ser. No. 436,822

Claims priority, application United Kingdom, Nov. 27, 1992, 9224909; Jun. 14, 1993, 9312205

Int. Cl.⁶ C09B *62/503;62/51;29/08;* **D06P** *1/384;3/26*

U.S. Cl. 534—642 **18 Claims**

1. A solid water-soluble dye containing an electrophilic group and a nucleophilic group containing an —SH or =S group, which dye when heated or basified or heated and basified causes the union of molecules of the dye by formation of a covalent bond between the electrophilic group of one molecule and the nucleophilic group of another molecule of the dye.

5,703,216

Patent Not Issued For This Number

5,703,217

NUCLEOTIDE FRAGMENT OF THE 23S RIBOSOMAL RNA OF MYCOBACTERIA, DERIVED PROBES AND PRIMERS, REAGENT AND DETECTION METHOD

Claude Mabilat, Villeurbanne, and Richard Christen, Nice, both of France, assignors to Bio Merieux, Marcy L'Etoile, France

PCT No. PCT/FR94/00929, § 371 Date Mar. 23, 1995, § 102(e) Date Mar. 23, 1995, PCT Pub. No. WO95/03412, PCT Pub. Date Feb. 2, 1995

PCT Filed Jul. 22, 1994, Ser. No. 403,762

Claims priority, application France, Jul. 23, 1993, 93 09318

Int. Cl.⁶ C07H *21/02;21/04;* **C12Q** *1/68;* **C12P** *19/34*

U.S. Cl. 536—23.1 **28 Claims**

1. A single-stranded nucleotide fragment of no more than one hundred modified or unmodified nucleotides, wherein said fragment comprises a nucleotide sequence selected from the group consisting of the following nucleotide sequences of a 23S ribosomal RNA of a species of the genus Mycobacterium:

beginning at nucleotide No. 137 and ending at nucleotide No. 179,

beginning at nucleotide No. 206 and ending at nucleotide No. 248,

beginning at nucleotide No. 269 and ending at nucleotide No. 289 of a 23S ribosomal RNA of species other than *M. tuberculosis* and *M. fortuitum*,

beginning at nucleotide No. 289 and ending at nucleotide No. 290 of a 23S ribosomal RNA of species other than *M. tuberculosis* and *M. fortuitum*,

beginning at nucleotide No. 341 and ending at nucleotide No. 372,

beginning at nucleotide No. 645 and ending at nucleotide No. 661 of a 23S ribosomal RNA of species other than *M. tuberculosis* and *M. fortuitum*,

beginning at nucleotide No. 1201 and ending at nucleotide No. 1242,

beginning at nucleotide No. 1409 and ending at nucleotide No. 1420 of a 23S ribosomal RNA of species other than *M. tuberculosis, M. marinum, M. scrofulaceum, M. avium* TMC 724, *M. leprae, M. kansasii, M. asiaticum, M. ulcerans* ATCC 19423, *M. malmoense* ATCC 29571, *M. gordonae, M. lactae* ATCC 25854, *M. aurum* ATCC 23366, *M. vaccae* ATCC 15483 and *M. neoaurum* ATCC 25795,

beginning at nucleotide No. 1493 and ending at nucleotide No. 1515,

beginning at nucleotide No. 1703 and ending at nucleotide No. 1761,

beginning at nucleotide No. 1854 and ending at nucleotide No. 1876 of a 23S ribosomal RNA of species other than *M. tuberculosis, M. kansasii* and *M. fortuitum*,

beginning at nucleotide No. 2126 and ending at nucleotide No. 2161 of a 23S ribosomal RNA of species other than *M. avium, M. tuberculosis, M. kansasii* and *M. fortuitum*,

their corresponding DNA sequences, and sequences fully complementary to said RNA and DNA sequences, the numbers of the nucleotides corresponding to their position relative to the nucleotide sequence of *Escherichia coli* 23S ribosomal RNA, wherein each said fragment selectively hybridizes to RNA or DNA of only one or two species of the genus Mycobacterium.

5,703,218

OLIGONUCLEOTIDES CONTAINING HYDROXYL-PROTECTING GROUPS ORTHOGONALLY REMOVABLE BY REDUCTION

Michael S. Urdea, Alamo, and Thomas Horn, Berkeley, both of Calif., assignors to Chiron Corporation, Emeryville, Calif.

Continuation of Ser. No. 558,881, Jul. 27, 1990, Pat. No. 5,430,138. This application Apr. 13, 1995, Ser. No. 421,798

Int. Cl.⁶ C07H *21/00*

U.S. Cl. 536—23.1 **5 Claims**

1. An oligonucleotide chain in which from one to all of the nucleotide residues have the structural formula

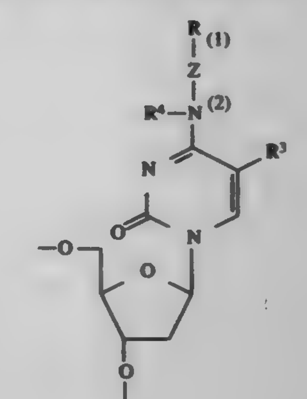

wherein:

R is selected from the group consisting of

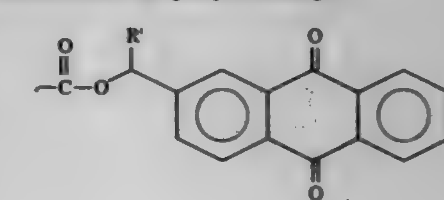

and

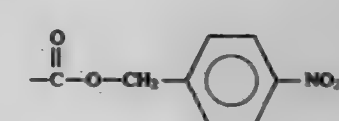

R' is hydrogen or phenyl;

R^3 is selected from the group consisting of hydrogen, methyl, I, Br and F;

R^4 is hydrogen or methyl; and

Z is selected from the group consisting of

$$^{(2)}-(CH_2)_x-NH-\overset{O}{\overset{\|}{C}}-O-^{(1)};$$

$$^{(2)}-(CH_2)_x-NH-\overset{O}{\overset{\|}{C}}-(CH_2)_y-O-^{(1)};$$

$$^{(2)}-(CH_2)_x-NH-\overset{O}{\overset{\|}{C}}-(CH_2)_y-S-S-(CH_2)_y-O-^{(1)};$$

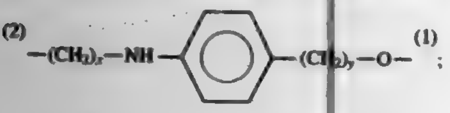

;

$$^{(2)}-(CH_2-CH_2-O)_x-^{(1)};\text{ and}$$

$$^{(2)}-(CH_2)_x-O-^{(1)},$$

wherein x and y may be the same or different and are integers in the range of 1 to 8 inclusive.

5,703,219

NUCLEIC ACID ENCODING HELICOBACTER PYLORI ENOLASE

Stuart A. Thompson, Joelton, and Martin J. Blaser, Nashville, both of Tenn., assignors to Vanderbilt University, Nashville, Tenn.

Continuation-in-part of Ser. No. 215,928, Mar. 21, 1994, Pat. No. 5,434,253. This application May 22, 1995, Ser. No. 446,920

Int. Cl.⁶ C07H *21/04;* **C12N** *15/63;1/21*

U.S. Cl. 536—23.2 **8 Claims**

1. An isolated nucleic acid encoding a *Helicobacter pylori* enolase.

5,703,220

GENES ENCODING MELANOCERTIN-4 RECEPTOR AND METHODS OF USE

Tadataka Yamada, and Ira Gantz, both of Ann Arbor, Mich., assignors to The Regents Of The University Of Michigan, Ann Arbor, Mich.

Division of Ser. No. 200,711, Feb. 17, 1994, Pat. No. 5,622,860. This application Jun. 27, 1996, Ser. No. 671,525

Int. Cl.⁶ C12N *15/10;5/10;1/12;* **G01N** *33/53*

U.S. Cl. 536—23.5 **16 Claims**

6. An isolated nucleic acid molecule comprising a nucleotide sequence which hybrizes to the nucleic acid comprising the nucleotide sequence of Sequence Listing ID No. 7 in 6×SSC at 42° C. followed by washing with 1×SSC at 55° C., wherein said isolated nucleic acid molecule encodes a melanocortin 4 receptor.

5,703,221

STEALTH VIRUS NUCLEIC ACIDS AND RELATED METHODS

William John Martin, 1634 Spruce St., South Pasadena, Calif. 91030

Continuation-in-part of Ser. No. 157,811, Nov. 23, 1993, which is a continuation-in-part of Ser. No. 887,502, May 22, 1992, which is a continuation-in-part of Ser. No. 704,814, May 23, 1991, and Ser. No. 763,039, Sep. 20, 1991. This application Jun. 5, 1995, Ser. No. 463,115

Int. Cl.⁶ C12N *15/34;* **C12P** *19/34*

U.S. Cl. 536—23.72 **1 Claim**

1. An isolated, purified or enriched stealth virus nucleic acid molecule corresponding to at least a portion of a stealth virus nucleic acid sequence in the MRC-5 cell line, ATCC accession number VR2343, obtained by a method comprising:

(a) amplification of nucleic acid sequences from a virus infected culture of cells by low stringency polymerase chain reaction (PCR) to produce PCR amplified nucleic acid sequences, and;

(b) isolation of said PCR amplified nucleic acid sequences.

5,703,222

PROBE COMPOSITION CONTAINING A BINDING DOMAIN AND POLYMER CHAIN AND METHODS OF USE

Paul David Grossman, Burlingame; Steven Fung, Palo Alto; Steven Michael Menchen, Fremont; Sam Lee Woo, Redwood City, and Emily Susan Winn-Deen, Foster City, all of Calif., assignors to The Perkin-Elmer Corporation, Foster City, Calif.

Continuation of Ser. No. 866,018, Apr. 7, 1992, Pat. No. 5,470,705, which is a continuation-in-part of Ser. No. 862,642, Apr. 3, 1992, abandoned. This application Nov. 21, 1995, Ser. No. 561,478

Int. Cl.⁶ C07H *21/04*

U.S. Cl. 536—24.3 **11 Claims**

1. A probe composition for use in detecting one or more of a plurality of different target sequences in a polynucleotide sample, comprising

a mixture of sequence-specific probes, each capable of binding specifically to a different target sequence, wherein each probe is characterized by (a) an oligonucleotide binding polymer having a probe-specific sequence of subunits designed for base-specific binding of the polymer to one of the target sequences under selected binding conditions, and (b) attached to the binding polymer, a polymer chain which imparts to the probe a charge/translational frictional drag ratio that is distinctive relative to the charge/translational frictional drag ratios of the other probe(s) in said mixture.

5,703,223

SOLID PHASE SYNTHESIS OF OLIGONUCLEOTIDES WITH STEREOSPECIFIC SUBSTITUTED PHOSPHONATE LINKAGES BY PENTAVALENT GRIGNARD COUPLING

Eric Wickstrom, and Christine Le Bec, both of Philadelphia, Pa., assignors to Thomas Jefferson University, Philadelphia, Pa.

Filed Sep. 2, 1994, Ser. No. 300,259

Int. Cl.⁶ C07H *1/00;21/04*

U.S. Cl. 536—25.33 **19 Claims**

1. A method for producing a dinucleotide having a stereospecific substituted phosphonate linkage between a first and a second nucleoside, wherein said dinucleotide has the formula of A or A':

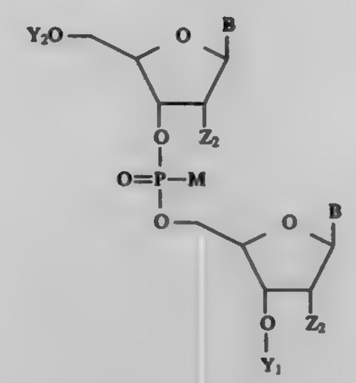

A or

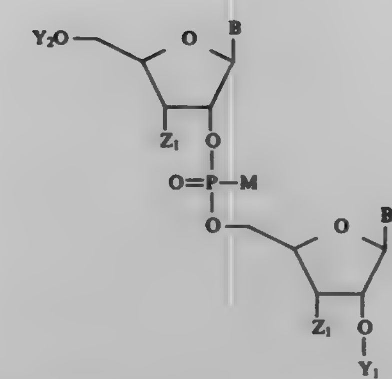

A'

wherein:

Y_1 is a hydrogen or V_1;

Y_2 is a hydrogen or V_2;

B is independently selected from the group consisting of substituted and unsubstituted purine and pyridmidine bases;

Z_1 and Z_2 are independently selected from the group consisting of hydrogen, hydroxyl, and OY_3, where Y_3 is substituted or unsubstituted alkyl; and

M is selected from the group consisting of alkyl, aryl, thio, borano and amino;

which method comprises:

(a) reacting a 5'-deprotected nucleoside having formula I or Ia:

wherein:

B^a is selected from the group of substituted and unsubstituted protected purine and protected pyrimidine bases;

Z_1 and Z_2 are selected from the group consisting of hydrogen, hydroxyl and OY_3, where Y_3 is a substituted or unsubstituted alkyl; and

V_1 is a solid support;

with a Grignard reagent of the formula, R—Mg—X, in at least a four fold molar excess with respect to the 5'-deprotected nucleoside, wherein:

R is a substituted or unsubstituted alkyl, allyl, aralkyl or aryl group; and

X is a halogen;

(b) coupling the product of (a) with a pure diastereoisomer of a 5'-protected nucleotide of formula II or IIa:

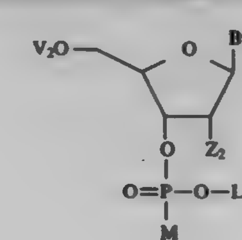

II

-continued

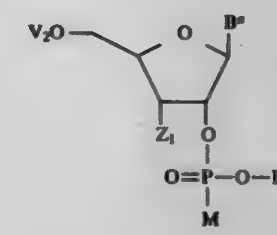

IIa

wherein:

B^a is defined as above;

V_2 is a protecting group;

Z_1 and Z_2 are defined as above;

M is defined as above; and

L is a leaving group;

under anhydrous conditions sufficient to produce said stereospecific substituted phosphonate linkage; and

(c) when V_2 is a protecting group, optionally removing the V_2 protecting group.

5,703,224

ANTIVIRAL C-NUCLEOSIDE DERIVATIVES

Tadaaki Ohgi, Shiga, and Junichi Yano, Nara, both of Japan, assignors to Nippon Shinyaku Co. Ltd., Japan

PCT No. PCT/JP94/02059, § 371 Date Aug. 26, 1996, § 102(e) Date Aug. 26, 1996, PCT Pub. No. WO95/15964, PCT Pub. Date Jun. 15, 1995

PCT Filed Dec. 9, 1994, Ser. No. 652,584

Claims priority, application Japan, Dec. 10, 1993, HEI-5/310622

Int. Cl.⁶ C07H *19/00*

U.S. Cl. 536—29.2 **2 Claims**

1. A nucleoside derivative of the following general formula [I]:

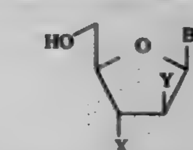

(I)

wherein B represents adenin-9-ylmethyl, guanin-9-ylmethyl, hypoxanthin-9-ylmethyl, thymin-1-ylmethyl, uracil-1-ylmethyl, or cytosin-1-ylmethyl; X and Y may be the same or different and each represents hydrogen or hydroxy, exclusive of the case in which X is hydrogen and Y is hydroxy.

5,703,225

SULFONATED CELLULOSE HAVING IMPROVED ABSORBENT PROPERTIES

Ramakant Tukaram Shet, Neenah, and Palani Raj R. Wallajapet, Wauwatosa, both of Wis., assignors to Kimberly-Clark Worldwide, Inc., Neenah, Wis.

Filed Dec. 13, 1995, Ser. No. 571,332

Int. Cl.⁶ C08B *5/00;* **A61F** *13/15;13/20;* **F26B** *13/26*

U.S. Cl. 536—59 **21 Claims**

1. A water-swellable, water-insoluble sulfonated cellulose, having an average degree of sulfonic group substitution from about 0.2 to about 0.5, that exhibits an initial Absorbency Under Load value

of at least about 8 grams per gram, wherein the sulfonated cellulose comprises both a sulfur atom of a sulfonic group and a hydroxyl group directly attached to a carbon atom on the cellulose.

5,703,226

METHOD FOR ACYLATION OF STARCH

Gary B. Nickel, Winnipeg, and Bernhard Berger, Poplar Point, both of Canada, assignors to Parrish & Heimbecker, Limited, Winnipeg, Canada

Continuation of Ser. No. 155,124, Nov. 19, 1993. This application May 8, 1995, Ser. No. 437,212

Int. Cl.⁶ C08B *31/02;31/04*

U.S. Cl. 536—107 **8 Claims**

1. A process for uniformly acylating starch without gelatinization of the starch, comprising:

a) providing a granular non-gelatinized starch-containing substrate selected from the group consisting of mung bean flour, lentil bean flour and pea flour

b) soaking said substrate in a penetrating base at a pH of between 8 and 10 for a sufficient amount of time to swell the substrate

c) heating the substrate and base during soaking to between 15° C.

d) reducing the pH to between about 7 and about 8;

e) adding an acylating, agent selected from the group consisting of acid anhydrides, acid halides and alkali metal salts of carboxylic acids to the swelled substrate; and

f) isolating the resulting acylated product by washing and centrifuging the acylated product.

5,703,227

Patent Not Issued For This Number

5,703,228

PROCESS FOR THE PURIFICATION OF CARBOHYDRATE DERIVATIVES WITH SURFACE-ACTIVE PROPERTIES

Jürgen Heidlas, Trostberg, and Jan Cully, Garching, both of Germany, assignors to SKW Trostberg Aktiengesellschaft, Trostberg, Germany

Filed Feb. 8, 1996, Ser. No. 598,348

Claims priority, application Germany, Feb. 8, 1995, 195 04 101.1

Int. Cl.⁶ C07H *1/06;1/00*

U.S. Cl. 536—127 **14 Claims**

1. A process for the purification of a carbohydrate derivative with surface-active properties, comprising: extracting a starting material containing the carbohydrate derivative and impurities with an extraction medium comprising compressed propane or mixtures thereof containing up to 25% by weight butane at pressures between 8 and 150 bar and a temperature of less than 120° C. whereby the impurities are separated from the carbohydrate derivative.

5,703,229

METHOD FOR TAGGING THERMOPLASTIC MATERIALS WITH NEAR INFRARED FLUOROPHORES

James J. Krutak; Michael R. Cushman, both of Kingsport; Clarence A. Coates, Blountville; William W. Parham; Max A. Weaver, both of Kingsport, all of Tenn., and Gabor Patonay, Stone Mountain, Ga., assignors to Eastman Chemical Company, Kingsport, Tenn.

Continuation of Ser. No. 243,033, May 16, 1994, abandoned, which is a division of Ser. No. 156,746, Nov. 24, 1993, Pat. No. 5,397,819, which is a continuation-in-part of Ser. No. 789,570, Nov. 8, 1991, abandoned. This application Feb. 29, 1996, Ser. No. 609,011

Int. Cl.⁶ C07D *487/22;* **C07B** *47/24*

U.S. Cl. 540—140 **9 Claims**

1. A compound of Formulae II:

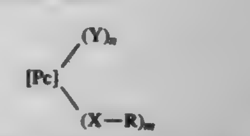

(II)

wherein Pc represents the phthalocyanine moiety of Formula IIa,

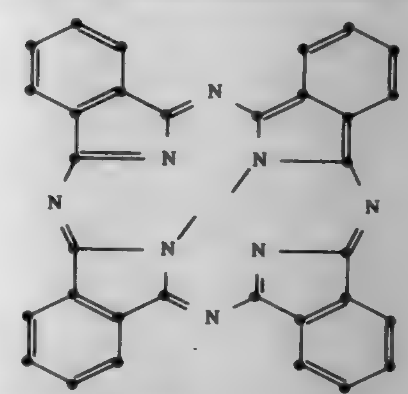

(IIa)

covalently bonded to $AlOR_5$,

wherein R_5 is selected from aryl groups substituted by at least one polyester reactive group selected from hydroxy, carboxy or an ester radical having the formulae

$$—OCOR_{14}, —OCO_2R_{14}, —OCONHR_{14} \text{ or } —CO_2R_{14},$$

wherein R_{14} is selected from unsubstituted or substituted alkyl, cycloalkyl or aryl radicals;

X is selected from oxygen, sulfur, or N—R_{10}, wherein R_{10} is hydrogen, cycloalkyl, alkyl, acyl, alkylsulfonyl, or aryl or R_{10} and R taken together to form a six-membered saturated or unsaturated heterocyclic ring with the nitrogen atom to which they are attached;

Y is selected from alkyl, aryl, heteroaryl, halogen or hydrogen;

R is selected from hydrogen, unsubstituted or substituted alkyl, acyl, alkenyl, alkynyl,

C_3–C_8 cycloalkyl, aryl, heteroaryl, alkylene

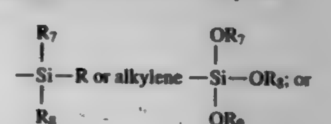

—$(X—R)_m$ is one or more groups selected from alkylsulfonylamino, arylsulfonylamino, or a group selected from the formulae —$X(C_2H_4O)_zR$,

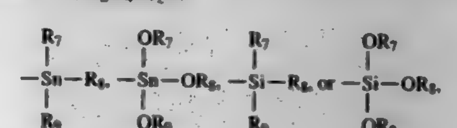

wherein R_7, R_8, and R_9 are independently selected from alkyl, phenyl or phenyl substituted with lower alkyl, lower alkoxy or halogen;

wherein R is as defined above; Z is an integer of from 1–4; two —$(X—R)_m$ groups can be taken together to form divalent substituents of the formula

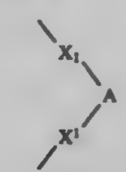

wherein each X^1 is independently selected from —O—, —S—, or —N— R_{10} and A is selected from ethylene; propylene; trimethylene; and said groups substituted with C_1–C_4 alkyl, C_1–C_4 alkoxy, aryl and cycloalkyl; or 1,2-phenylene and 1,2-phenylene containing 1–3 substituents selected from C_1–C_4 alkyl, C_1–C_4 alkoxy or halogen;

n is an integer from 0–16; m is an integer from 0–16; provided that the sums of n+m is 16.

5,703,230

MESO-MONOIODO-SUBSTITUTED TETRAMACROCYCLIC COMPOUNDS AND METHODS FOR MAKING AND USING THE SAME

Ross W. Boyle; David Dolphin, and Claire K. Johnson, all of Vancouver, Canada, assignors to University of British Columbia, Vancouver, Canada

Filed Dec. 2, 1994, Ser. No. 349,179

Int. Cl.⁶ A61K *31/555;* **C07D** *487/22*

U.S. Cl. 540—145 **34 Claims**

1. A meso-monoiodo-substituted tetramacrocyclic compound having the formula (I):

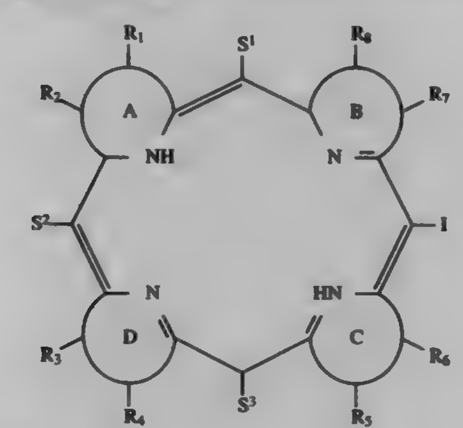

(I)

wherein:

each of A tough D is independently a 5-membered, nitrogen-containg ring having the members necessary to complete a porphyrin, chlorin, bacteriochlorin or isobacteriochlorin nucleus;

R_1 through are R_8 independently a hydrogen atom, a lower alkyl group, a lower alkyl carboxylic acid or acid ester group, keto, hydroxy, nitro, amino, or R_1 and R_2, R_3 and R_4, R_5 and R_6, or R_7 and R_8, taken together with another ring, ring substituent or meso-substituent, forms a fused 5- or 6-membered ring selected from the group consisting of cyclopentane, furan, thiophene, pyrrole, isopyrrole, 3-isopyrrole pyrazole, 2-isoimidole, 1,2,3-triazole, 1,2,4-triazole, 1,2-dithiole, 1,3-dithiole, 1,2,3-oxathiole, isoxazole, oxazole, thiazole, isothiazole, 1,2,3-oxadiathiazole, 1,2,4-oxdiazole, 1,2,5-oxadiazole, 1,3,4-oxadiazole, 1,2,3-dioxazole, 1,2,4-dioxazole, 1,2,5-oxathiazole, 1,3-oxathiole, benzene, cyclohexane, 1,2-pyran, 1,4-pyran, 1,2-pyrone, 1,4-pyrone, 1,2-dioxin, 1,3-dioxin (dihydro form), pyridine, pyridazine, pyrimidine, pyrazine, piperazine, 1,3,5-triazine, 1,2,4-triazine, 1,2,4-oxazine, 1,3,2-oxazine, o-isoxazine, 1,2,5-oxathiazine, 1,4-oxazine, p-isoxazine, 1,2,6-oxathiazine, 1,3,5,2-oxaciazine, morpholine, azepine, oxepin, thiepin and 1,2,4-diazepine; and

each of S^1 through S^3 is H, substituted or unsubstituted alkyl having about 1 to about 18 carbon atoms, and wherein said alkyl group is substituted by a group selected from the group consisting of a halogen atom, a hydroxy group, thiol, a carbonyl group, a primary amino group, a secondary amino group, a tertiary amino group, a quaternary amino group, nitrile, a phosphate group and a sulfonate group, substituted or unsubstituted cycloalkyl having about 3 to about 7 carbon atoms, and wherein said cycloalkyl group is substituted by a group selected from the group consisting of halogen atom, a hydroxy group, thiol, a carbonyl group, a primary amino group, a secondary amino group, a tertiary amino group, a quaternary amino group, nitrile, a phosphate group and a sulfonate group, a substituted or unsubstituted aromatic ring having about 5 to about 12 carbon atoms, or a substituted or unsubstituted heterocyclic ring selected from the group consisting of furan, thiophene, pyrrole, isopyrrole, 3-isopyrrole, pyrazole, 2-isoimidazole, 1,2,3-triazole, 1,2,4-triazole, 1,2-dithiole, 1,3-dithiole, 1,2,3-oxathiazole, isoxazole, oxazole, thiazole, isothiazole, 1,2,3-oxadiazole, 1,2,4-oxadiazole, 1,2,5-oxadiazole, 1,3,4-oxadiazole, 1,2,3,4-oxatriazole, 1,2,3,5-oxatriazole, 1,2,3-dioxazole, 1,2,4-dioxazole, 1,3,2-dioxazole, 1,3,4-dioxazole, 1,2,5-oxathiazole, 1,3-oxathiazole, benzene, 1,2-pyran, 1,4-pyran, 1,2-pyrone, 1,4-pyrone, 1,2-dioxin, 1,3-dioxin, pyridine, N-alkyl pyridinium, pyrdazine, pyrimidine, pyrazine, 1,3,5-triazine, 1,2,4-triazine, 1,2,3-triazine, 1,2,4-oxazine, 1,3,2-oxazine, 1,3,6-oxazine, 1,4-oxazine, o-isoxazine, p-isoxazine, 1,2,5-oxathiazine, 1,4-oxazine, o-isoxazine, p-isoxazine, 1,2,5-oxathiazine, 1,2,6-oxathiazine, 1,4,2-oxadiazine, 1,3,5,2-oxadiazine, azepine, oxepin, thiepin, 1,2,4-diazepine, indene, isoindene, benzofuran, isobenzofuran, thionaphthene, isothionaphthene, indole, indolenine, 2-isobenzazole, 1,4-pyrindine, pyrando[3,4-b]-pyrrole, isoindazole, indoxazine, benzoxazole, anthranil, naphthalene, 1,2-benzopyran, 1,2-benzopyrone, 1,4-benzopyrone, 2,1-benzopyrone, 2,3-benzopyrone, quinoline, isoquinoline, 1,2-benzodiine, 1,3-benzodiazine, naphthyridine, pyrido[3,4-b]-pyridine, pyrido[3,2-b]-pyridine, pyrido[4,3-b]-pyridine, 1,3,2-benzoxazine, 1,4,2-benzoxazine, 2,3,1-benzoxazine, 3,1,4-benzoxazine, 1,2-benzisoxazine, 1,4-benzisoxazine, anthracene, phenanthrene, carbazole, xanthene, acridine and purine.

5,703,231

PROCESS FOR MAKING ANTIMICROBIAL COMPOUNDS

Jared Lynn Randall, Oxford, and Jane Ellen Godlewski, South Plymouth, both of N.Y., assignors to The Procter & Gamble Company, Mason, Ohio

Continuation of Ser. No. 284,960, Aug. 2, 1994, abandoned. This application Nov. 14, 1996, Ser. No. 749,046

Int. Cl.⁶ C07D *215/56;237/28;471/04;487/04*

U.S. Cl. 540—200 **25 Claims**

1. A process for making a compound having a structure according to Formula (I)

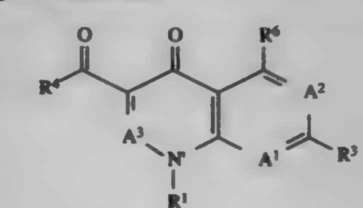

(I)

wherein

(A)

(1) A^1 is N or C(R^7); where

(a) R^7 is hydrogen, hydroxy, alkoxy, nitro, cyano, halogen, alkyl, or —N(R^8)(R^9), and

(b) R^8 and R^9 are, independently, R^{8a}; where R^{8a} is hydrogen, alkyl, alkenyl, a carbocyclic ring, or a heterocyclic

ring; or R^8 and R^9 together comprise a heterocyclic ring including the nitrogen to which they are bonded;

(2) A^2 is N or $C(R^2)$; where R^2 is hydrogen or halogen;

(3) A^3 is N or $C(R^5)$; where R^5 is hydrogen;

(4) R^1 is hydrogen, alkyl, a carbocyclic ring, a heterocyclic ring, alkoxy, hydroxy, alkenyl, arylalkyl, heteroalkyl, —$N(R^8)(R^9)$, or a lactam-containing moiety;

(5) R^3 is hydrogen, halogen, alkyl, a carbocyclic ring, a heterocyclic ring, or a lactam-containing moiety;

(6) R^4 is hydroxy; and

(7) R^6 is hydrogen, halogen, nitro, hydrazino, alkoxyamino, —$N(R^8)(R^9)$, or a lactam-containing moiety;

except that if one of R^1, R^3, or R^6 is a lactam-containing moiety, then the other two are not a lactam-containing moiety;

(B) and

(1) when A^2 is $C(R^2)$, R^2 and R^3 may together comprise —O—(CH_2)n—O—, where n is from 1 to 4;

(2) when A^3 is $C(R^5)$, R^4 and R^5 may together comprise a heterocyclic ring including the carbon atom to which R^4 and R^5 are bonded and the carbon atoms of Formula (I) to which said carbon atom(s) are bonded; and

(3) when A^1 is $C(R^7)$, R^3 and R^7 may together comprise a heterocyclic ring including A^1 and the carbon atom to which R^3 is bonded;

or a protected form, salt, pharmaceutically-acceptable salt, biohydrolyzable ester, or solvate thereof; the process comprising reacting one or more organosilicon compounds with a compound having a structure according to Formula (II),

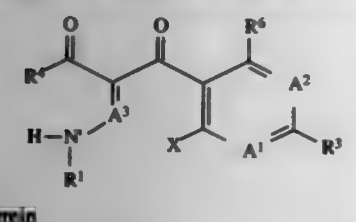

(II)

wherein

(A)

(1) A^1 is N or $C(R^7)$; where

(a) R^7 is hydrogen, hydroxy, alkoxy, nitro, cyano, halogen, alkyl, or —$N(R^8)(R^9)$, and

(b) R^8 and R^9 are, independently, R^{8a}; where R^{8a} is hydrogen, alkyl, alkenyl, a carbocyclic ring, or a heterocyclic ring; or R^8 and R^9 together comprise a heterocyclic ring including the nitrogen to which they are bonded;

(2) A^2 is N or $C(R^2)$; where R^2 is hydrogen or halogen;

(3) A^3 is N or $C(R^5)$; where R^5 is hydrogen;

(4) R^1 is hydrogen, alkyl, heteroalkyl, a carbocyclic ring, a heterocyclic ring, alkoxy, hydroxy, alkenyl, arylalkyl, —$N(R^8)(R^9)$, or a lactam-containing moiety;

(5) R^3 is hydrogen, halogen, alkyl, a carbocyclic ring, a heterocyclic ring, or a lactam-containing moiety;

(6) R^4 is hydroxy;

(7) R^6 is hydrogen, halogen, nitro, hydrazino, alkoxyamino, —$N(R^8)(R^9)$, or a lactam-containing moiety; and

(8) X is a leaving group;

except that if one of R^1, R^3, or R^6 is a lactam-containing moiety, then the other two are not a lactam-containing moiety;

(B) and

(1) when A^2 is $C(R^2)$, R^2 and R^3 may together comprise —O—(CH_2)n—O—, where n is from 1 to 4;

(2) when A^3 is $C(R^5)$, R^4 and R^5 may together comprise a heterocyclic ring including the carbon atoms to which R^4 and R^5 are bonded and the carbon atom of Formula (II) to which said carbon atom(s) are bonded; and

(3) when A^1 is $C(R^7)$, R^3 and R^7 may together comprise a heterocyclic ring including A1 and the carbon atom to which R^3 is bonded;

or a protected form, salt, biohydrolyzable ester, or solvate thereof.

5,703,232

PROCESS AND SOLVATE OF 2-METHYL-THIENO-BENZODIAZEPINE

Charles A. Bunnell, Lafayette, Ind.; Terrence Michael Hotten, Farnborough, England; Samuel D. Larsen, West Lafayette, Ind., and David Edward Tupper, Reading, England, assignors to Eli Lilly and Company, Indianapolis, Ind.

Division of Ser. No. 410,474, Mar. 24, 1995, Pat. No. 5,631,250. This application Jan. 16, 1996, Ser. No. 586,431

Int. Cl.⁶ C07D *243/10;495/04*

U.S. Cl. 540—557 **8 Claims**

1. A process for preparing substantially pure Form I olanzapine comprising drying a C_1–C_3 alcohol solvate of olanzapine, and then crystallizing the dried solvate with one or more solvents selected from ethyl acetate, acetone, 2-propanol, t-butanol, tetrahydrofuran and toluene.

5,703,233

QUINILONE DISULFIDE AS INTERMEDIATES

Pietro Bellani, Rho, Italy, assignor to Archimica SpA, Orrigio, Italy

Filed Jun. 26, 1995, Ser. No. 494,353

Claims priority, application Italy, Oct. 27, 1993, MI94A2284

Int. Cl.⁶ C07D *513/06;401/14*

U.S. Cl. 544—32 **3 Claims**

1. A process of preparing rufloxacin, a compound of formula (A)

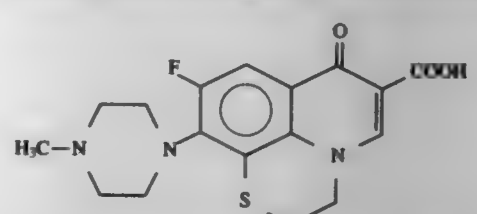

(A)

and its pharmaceutically acceptable salts, in which is used a quinolone disulfide of the formula (I)

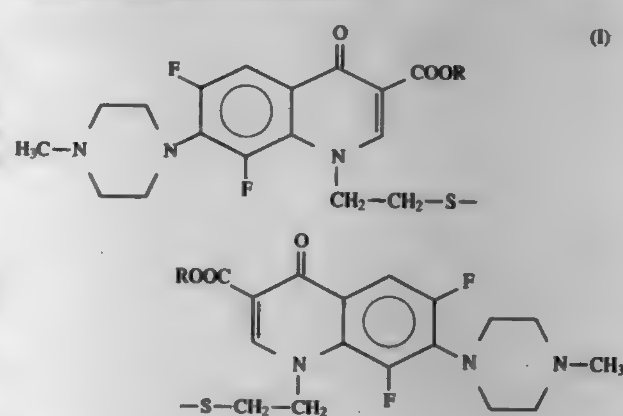

(I)

wherein R represents a C_1–C_4-alkyl group, and its salts which comprises reducing a compound of formula (I) with a suitable reducing agent and cyclyzing the resultant compound with a base to afford a compound of Formula (A')

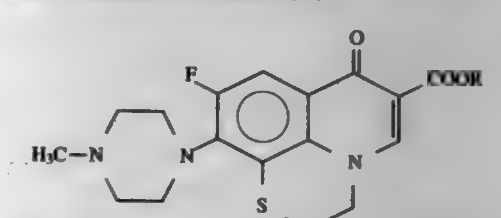

(A')

and then hydrolyzing a compound of formula A' to afford a compound of formula (A) and, if required, preparing its pharmaceutically acceptable salts.

5,703,234

HETEROCYCLIC ALKANAMIDE

Tameo Iwasaki, Nishinomiya; Kazuhiko Kondo, Osaka, and Hiroshi Ohmizu, Kyoto, all of Japan, assignors to Tanabe Seiyaku Co., Ltd., Osaka, Japan

Division of Ser. No. 262,892, Jun. 21, 1994, Pat. No. 5,550,229. This application Jun. 5, 1995, Ser. No. 462,676

Claims priority, application Japan, Jun. 23, 1993, 5-151899

Int. Cl.⁶ C07D *265/18;* **A61K** *31/535*

U.S. Cl. 544—50 **3 Claims**

1. A compound of the formula (I-A):

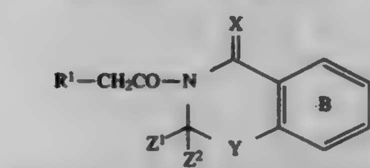

(I-A)

wherein R^1 is a lower alkyl group, Ring B is a substituted or unsubstituted benzene ring, X is an oxygen atom or a sulfur atom, Y is an oxygen atom, a sulfur atom, or a protected or unprotected imino group, Z^1 and Z^2 are the same or different and each a substituted or unsubstituted alkyl group, or an aralkyl group, or both combine at the ends thereof to form a substituted or unsubstituted alkylene group having 4 to 7 carbon atoms.

5,703,235

N-AMINOALKYL-2-ANTHRACENECARBOXAMIDES; NEW DOPAMINE RECEPTOR SUBTYPE SPECIFIC LIGANDS

Jun Yuan, Clinton, and Xi Chen, New Haven, both of Conn., assignors to Neurogen Corporation, Branford, Conn.

Filed Mar. 21, 1996, Ser. No. 619,351

Int. Cl.⁶ C07D *401/10;295/15;211/14;211/70*

U.S. Cl. 544—363 **20 Claims**

1. A compound of the formula:

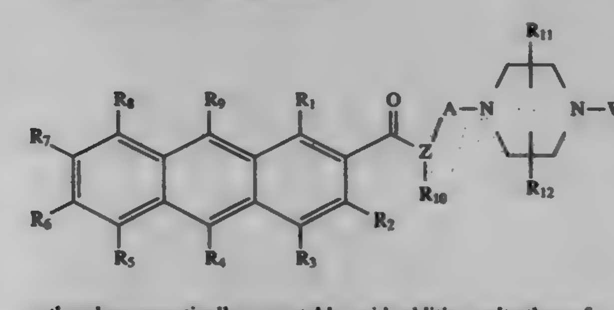

or the pharmaceutically acceptable acid addition salts thereof, wherein:

R_1, R_2, R_3, R_4, R_5, R_6, R_7, R_8 and R_9 are the same or different and represent hydrogen, C_1–C_6 alkyl, halogen, hydroxy, amino, cyano, nitro, trifluoromethyl, trifluoromethoxy, C_1–C_6 alkoxy, —O_2CR', —NHCOR', —COR', —SO_mR', where R' is C_1–C_6 alkyl and wherein m is 0, 1 or 2; or

R_1, R_2, R_3, R_4, R_5, R_6, R_7, R_8 and R_9 independently represent —CONR'R", or —NR'R" where R' and R" independently represent hydrogen or C_1–C_6 alkyl;

R_{10} is hydrogen or C_1–C_6 alkyl; and

A represents an alkylene group of 2 to 6 carbon atoms optionally substituted with one or more alkyl groups having from 1 to 4 carbon atoms;

R_{11} and R_{12} are the same or different and represent hydrogen or C_1–C_6 alkyl; and

W is phenyl, naphthyl, 1-(5,6,7,8-tetrahydro)naphthyl or 4-(1,2-dihydro)indenyl, pyridinyl, pyrimidyl, quinolinyl, isoquinolinyl, benzofuranyl, benzothienyl; each of which is optionally substituted with up to three groups independently selected from halogen, C_1–C_6 alkyl, C_1–C_6 alkoxy, thioalkoxy, hydroxy, amino, monoalkylamino, dialkylamino, cyano, nitro, trifluoromethyl or trifluoromethoxy.

5,703,236

TETRAHYDROFURAN ANTIFUNGALS

Anil K. Saksena, Upper Montclair; Viyyoor M. Girijavallabhan, Parsippany; Raymond G. Lovey, West Caldwell; Russell E. Pike, Stanhope; Haiyan Wang, Dayton; Yi-Tsung Liu, Morris Township; Ashit K. Ganguly, Upper Montclair, and Frank Bennett, Piscataway, all of N.J., assignors to Schering Corporation, Kenilworth, N.J.

Continuation-in-part of Ser. No. 171,083, Dec. 21, 1993, abandoned. This application Jun. 2, 1995, Ser. No. 458,551

Int. Cl.⁶ C07D *405/14*

U.S. Cl. 544—366 **4 Claims**

1. A method of making compounds of the formula I

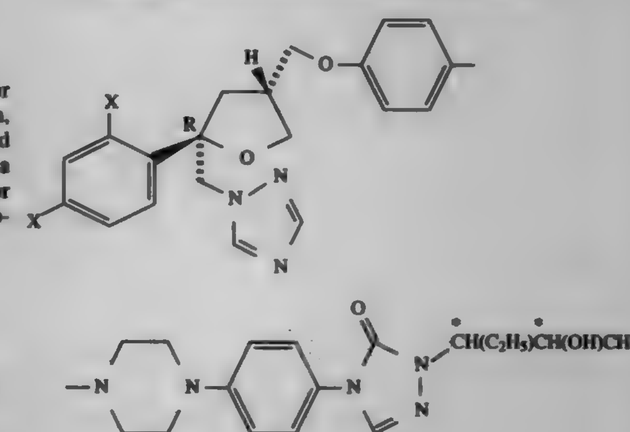

wherein X is independently both F or both Cl or one X is independently F and the other is independently Cl, and wherein the absolute stereochemistry at each asterisk carbon (*) is same i.e., S,S or R,R substantially free of S,R or R,S and wherein S or R-lactic acid ester is contacted with pyrrolidine and a hydroxy protecting group reagent converted into the corresponding lactic acid amide, which is selectively reduced to the corresponding propionaldehyde and then converted into the corresponding N-formylaminopropanimine which comprises:

(a) reacting the N-formylaminopropanimine of the formula II

$$\overset{*}{\mathrm{CH_3CH(OPG)}}\mathrm{CH{=}NNHCHO} \qquad \text{II}$$

with ethylmagnesium bromide under Grignard reaction conditions sufficient to produce a compound of the formula III

$$\mathrm{CH_3\underset{*}{C}H(OPG)\underset{**}{C}H(C_2H_5)NHNHCHO} \qquad \text{III}$$

wherein the absolute stereochemistry induced at the double asterisk carbon (**) is substantially the same as that at the single asterisk carbon and wherein PG is a hydroxy protecting group and (b) reacting the compound of formula III with a compound of formula IV

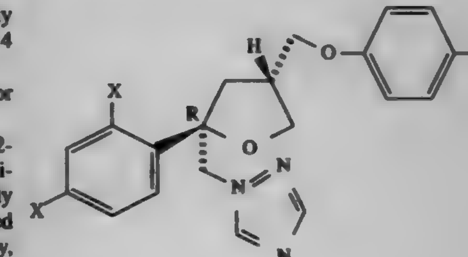

IV

-continued

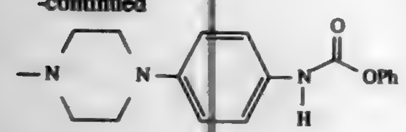

in the presence of 1,8-diazabicycloundec-7-ene and at elevated temperatures for a time sufficient to produce the compound of formula V

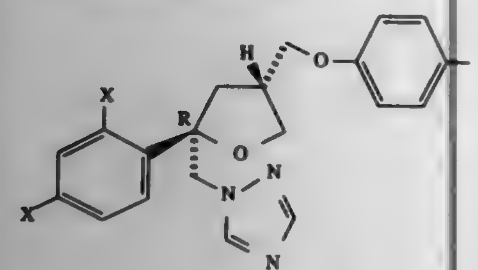

V

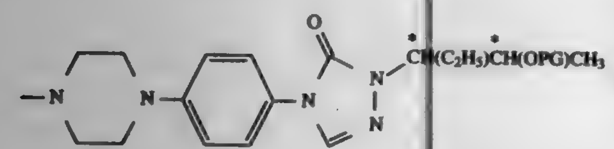

and (c) reacting the compound of formula V with a catalytic amount of Pd black on carbon in the presence of formic acid to produce after purification the compounds of formula I.

5,703,237

N-AMINOALKYL-2-ANTHRAQUINONECARBOXAMIDES; NEW DOPAMINE RECEPTOR SUBTYPE SPECIFIC LIGANDS

Xi Chen, New Haven, and Jan William Francis Wasley, Guilford, both of Conn., assignors to Neurogen Corporation, Branford, Conn.

Filed Apr. 18, 1996, Ser. No. 634,278
Int. Cl.^{6} C07D *241/04;295/00*
U.S. Cl. 544—380 9 Claims

1. A compound of the formula:

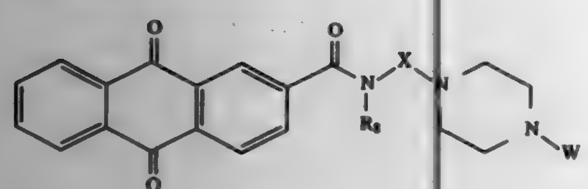

wherein:

R_8 is hydrogen or lower alkyl;

X represents an alkylene group of 2 to 6 carbon atoms optionally substituted with one or more alkyl groups having from 1 to 4 carbon atoms; and

W is phenyl, naphthyl, 1-(5,6,7,8-tetrahydro)naphthyl, or dihydroindenyl, each of which is optionally substituted with up to three groups independently selected from halogen, C_1– C_6 alkyl, C_1–C_4 alkoxy, thioalkoxy, hydroxy, amino, monoalkylamino, dialkylamino, cyano, nitro, trifluoromethyl or trifluoromethoxy.

5,703,238

PREPARATION OF PYRIDINE DYES

Ernst Schefczik, Ludwigshafen; Sabine Grüttner-Merten, Bentheim; Peter Saling, Neustadt; Rüdiger Sens, Mannheim, and Helmut Reichelt, Neustadt, all of Germany, assignors to BASF Aktiengesellschaft, Ludwigshafen, Germany

PCT No. PCT/EP95/00327, § 371 Date Jul. 30, 1996, § 102(e) Date Jul. 30, 1996, PCT Pub. No. WO95/21219, PCT Pub. Date Aug. 10, 1995
PCT Filed Jan. 31, 1995, Ser. No. 682,626
Claims priority, application Germany, Feb. 2, 1994, 44 02 083.5
Int. Cl.^{6} C07D *471/04;* C09B *55/00;25/04*
U.S. Cl. 546—119 11 Claims

1. A process for preparing pyridine dyes having the formula (I):

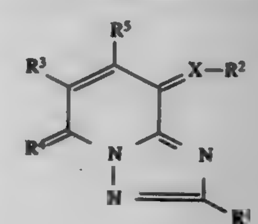

(I)

wherein:

X is nitrogen or CH;

R^1 is C_1–C_{20}-alkyl, which is unsubstituted or substituted and which is uninterrupted or interrupted by one or more oxygen atoms in ether function, said substitution being phenyl, C_1–C_4-alkylphenyl, C_1–C_4-alkoxyphenyl, halophenyl, C_1–C_8-alkanoyloxy, C_1–C_8-alkylaminocarbonyloxy or C_1–C_{20}-alkoxycarbonyl;

R^2 is a 5-membered aromatic heterocyclic radical;

R^3 is hydrogen, cyano, carbamoyl, carboxyl or C_1–C_4-alkoxycarbonyl;

R^4 is oxygen or a radical of the formula $C(CN)_2$, $C(CN)COOL^1$ or $C(COOL^1)_2$, where L^1 is in either case C_1–C_8-alkyl, which is uninterrupted or interrupted by one or two oxygen atoms in ether function; and

R^5 is hydrogen or C_1–C_4-alkyl; which comprises condensing a pyridine compound of the formula (II):

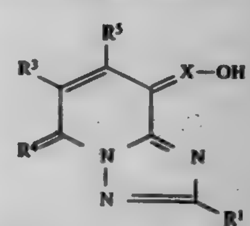

(II)

wherein X, R^1, R^3, R^4 and R^5 are each as defined above, with a 5-membered aromatic heterocycle of the formula (III):

R^2—H(III),

wherein R^2 is as defined above, in an acid reaction medium at a pH of from about 0 to about 5 at from about −10° to +100° C.

5,703,239

INDANYLPIPERIDINES AS MELATONERGIC AGENTS

Ronald J. Mattson, Meriden, and John D. Catt, Southington, both of Conn., assignors to Bristol-Myers Squibb Company, New York, N.Y.

Continuation-in-part of Ser. No. 458,921, Jun. 2, 1995. This application Apr. 16, 1996, Ser. No. 633,362
Int. Cl.^{6} C07D *211/06*
U.S. Cl. 546—205 24 Claims

1. A compound of Formula I:

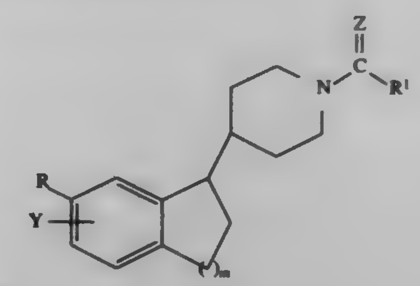

(I)

wherein:

R is H, C_{1-7} alkoxy, halogen, hydroxyl, C_{1-4} haloalkoxy or C_{1-4} alkoxyphenyl C_{1-7} alkoxy;

Y is hydrogen or halogen;

Z is O or S;

m is 1 or 2; and

R^1 is hydrogen, C_{1-6} straight or branched alkyl, C_{1-6} straight or branched haloalkyl, C_{2-8} alkylthioalkyl, C_{2-8} alkyloxyalkyl, C_{2-6} straight or branched alkenyl, C_{3-5} cycloalkyl, C_{3-5} cycloalkenyl, thienyl, furanyl, thiadiazolyl, pyrrolyl, C_{1-6} alkylthio or NR^2R^3, in which R^2 and R^3 are independently hydrogen or C_{1-4} alkyl.

5,703,240

PIPERIDINE DERIVATIVES

Duncan Robert Armour; Brian Evans; David Middlemiss; Alan Naylor; Neil Anthony Pegg; Maria Victoria Vinader; Gerard Martin Paul Giblin, all of Stevenage; Tanis Hubbard, Fulbourn; Michael Menteith Hann, Stevenage; Xiao-Qing Lewell, Stevenage, and Stephen Paul Watson, Stevenage, all of Great Britain, assignors to Glaxo Group Limited, London, England

PCT No. PCT/EP94/03129, § 371 Date Mar. 21, 1996, § 102(e) Date Mar. 21, 1996, PCT Pub. No. WO95/08549, PCT Pub. Date Mar. 30, 1995
PCT Filed Sep. 20, 1994, Ser. No. 612,843
Claims priority, application United Kingdom, Sep. 22, 1993, 9319606; Dec. 31, 1993, 9326583
Int. Cl.^{6} C07D *401/10;* A61K *31/445*
U.S. Cl. 546—210 20 Claims

1. A compound of formula (I)

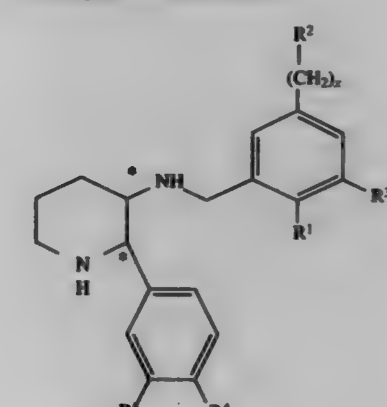

(I)

wherein R^1 is a C_{1-4}alkoxy group;

R^2 is

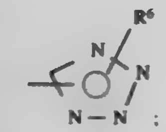

;

R^3 is a hydrogen or halogen atom;

R^4 and R^5 may each independently represent a hydrogen or halogen atom, or a C_{1-4}alkyl, C_{1-4}alkoxy or trifluoromethyl group;

R^6 is a hydrogen atom, a C_{1-6}alkyl, $(CH_2)_m$cyclopropyl, —$S(O)_nC_{1-4}$alkyl, phenyl,

NR^7R^8, $CH_2C(O)CF_3$ or trifluoromethyl group;

R^7 and R^8 may each independently represent a hydrogen atom, or a C_{1-4}alkyl or acyl group;

x represents zero or 1;

n represents zero, 1 or 2;

m represents zero or 1;

or a pharmaceutically acceptable salt or solvate thereof.

5,703,241

INHIBITOR OF FARNESYL-PROTEIN TRANSFERASE

S. Jane deSolms, Norristown, and Samuel L. Graham, Schwenksville, both of Pa., assignors to Merck & Co., Inc., Rahway, N.J.

Filed Oct. 10, 1996, Ser. No. 729,265
Int. Cl.^{6} A61K *31/415;* C07D *403/02*
U.S. Cl. 548—314.7 4 Claims

1. A compound which inhibits farnesyl-protein transferase which is:

N-[1-(1H-Imidazol-4-propionyl) pyrrolidin-2(S)-ylmethyl]-N-(2-methoxybenzyl)glycyl-methionine isopropyl ester

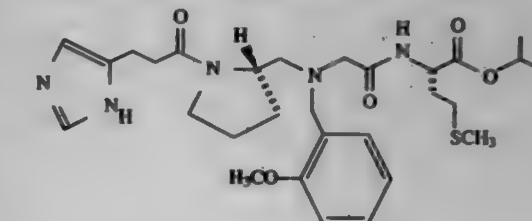

or a pharmaceutically acceptable salt thereof.

5,703,242

PREPARATION OF SOLUTIONS OF IMIDO-ALKANCARBOXYLIC ACIDS SUITABLE FOR PEROXIDATION PROCESSES

Claudio Cavallotti; Gilberto Nucida, and Claudio Troglia, all of Milan, Italy, assignors to Ausimont, S.p.A., Italy

Filed Dec. 20, 1996, Ser. No. 777,699
Claims priority, application Italy, Dec. 21, 1995, MI95A2718 U
Int. Cl.^{6} C07D *209/48*
U.S. Cl. 548—473 13 Claims

1. Purification process of imido-alkancarboxylic acids from contaminants represented by carboxylic acid, lactam or aminoacids and water comprising:

A) preparation of the imido-alkancarboxylic acid by reaction of:

a1) an anhydride of formula

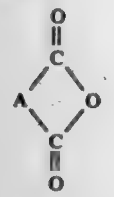

or the corresponding acids, with

b1) an aminoacid of formula

$H_2N-X-C(=O)-OH$

with

c1) water; or

a1) with

b2) a lactam of general formula

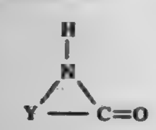

with

c1) water; at temperatures comprised betweeen 100° C. and 250° C., under pressure of an inert gas from 1 to 30 bar, for reaction times from 2 to 20 hours;

wherein A indicates a group of formula

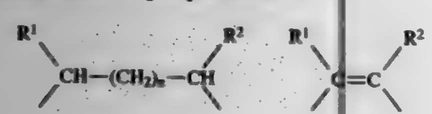

or

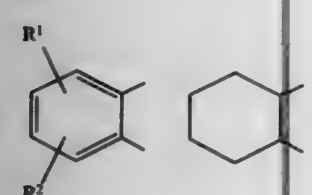

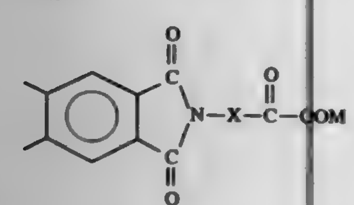

n is an integer 0, 1 or 2,

R^1 is hydrogen, chlorine, bromine, alkyl C_1–C_{20}, alkenyl C_2–C_{20}, aryl or alkylaryl,

R^2 is hydrogen, chlorine, bromine or a group of formula—SO_3M, $—CO_2M$, $—CO_3M$, $—OSO_3M$,

M indicates hydrogen, an alkaline metal or ammonium ion or the equivalent of an alkaline-earth metal ion and X indicates alkylene C_1–C_{19} or arylene;

Y=X wherein the ratio by moles between a1/(b1 or b2)/c1 is comprised between 1/1.0–1.2/0.5–3;

B) discharge of precursor obtained in phase A) in a solvent immiscible with water;

C) separation of aqueous phases from an organic phase;

D) recovery of the organic phase for the successive peroxidation reaction.

5,703,243

INTERMEDIATES FOR PYRROLIDYLTHIOCARBAPENEM DERIVATIVE

Yasuhiro Nishitani, Izumi; Tadashi Irie, Suita, and Yutaka Nishino, Neyagawa, all of Japan, assignors to Shionogi Seiyaku Kabushiki Kaisha, Osaka, Japan

Continuation of Ser. No. 204,929, Mar. 1, 1994, abandoned, which is a division of Ser. No. 929,961, Aug. 14, 1992, Pat. No. 5,317,016. This application Dec. 19, 1995, Ser. No. 574,863

Claims priority, application Japan, Aug. 20, 1991, 3-207922; Feb. 21, 1992, 4-35366

Int. Cl.^{6} C07D *207/12*

U.S. Cl. 548—541 18 Claims

1. A pyrrolidine derivative represented by Formula II:

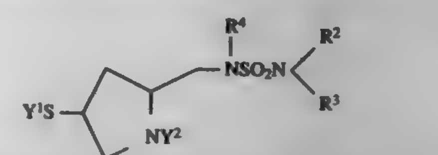

(II)

wherein R^2, R^3 and R^4 are hydrogen, lower alkyl which can be substituted, or an amino protecting group independently, or R^2 and R^3 together with a nitrogen atom to which R^2 and R^3 are bonded form a saturated or unsaturated cyclic group, or R^2 and R^4, or R^3 and R^4 together with two nitrogen atoms and one sulfur atom in the sufamide group form a saturated or unsaturated cyclic group; each cyclic group can further include at least one atom selected from the group consisting of oxygen, sulfur and nitrogen, and each cyclic group can be substituted; Y^1 is hydrogen or a mercapto protecting group; and Y^2 is hydrogen or an amino protecting group.

5,703,244

PROCESS FOR PREPARATION OF CHIRAL 3-AMINO-PYRROLIDINE AND ANALOGOUS BICYCLIC COMPOUNDS

Qun Li, Libertyville; Wei-Bo Wang, Grayslake, both of Ill.; Daniel T. Chu, Santa Clara, Calif., and Lisa Anne Hasvold, Grayslake, Ill., assignors to Abbott Laboratories, Abbott Park, Ill.

Filed Nov. 21, 1996, Ser. No. 754,641

Int. Cl.^{6} C07D *207/09*

U.S. Cl. 548—557 8 Claims

1. A process for the preparation of chiral 3-aminopyrrolidine compounds having the formula:

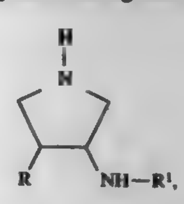

wherein R is C_1–C_6-alkyl, C_2–C_6-alkenyl, C_2–C_6-alkynyl, or C_3–C_6-cycloalkyl, and R^1 is hydrogen, C_1–C_6-alkyl or an amino-protecting group;

comprising:

(a) protecting a single hydroxyl group of selected positional isomer of 2-butene-1,4-diol, by stepwise treatment with a base, an arylmethyl halide and a tetraalkylammonium halide, and isolating a monoprotected hydroxy-olefin having the formula:

$HO—CH_2—CH═CH—CH_2—OAr,$

wherein Ar represents the aryl moiety;

(b) chirally oxidizing the monoprotected hydroxy-olefin with titanium isopropoxide, an optically active chiral tartrate ester and t-butyl hydroperoxide, and isolating an epoxy compound having the formula:

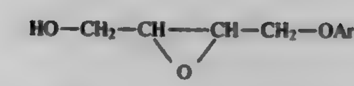

(c) reacting the epoxy compound with an R—Mg—X compound, wherein R is as defined above, and X is halogen, under Grignard Reaction conditions, and isolating the chiral third intermediate compound having the formula:

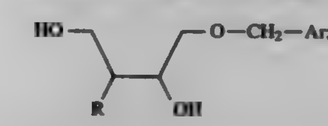

(d) removing the protecting group from the chiral third intermediate compound, and isolating the chiral fourth intermediate compound having the formula:

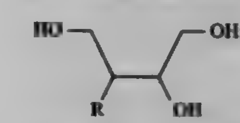

(e) sulfonylating the chiral fourth intermediate compound by treatment with a substituted sulfonyl chloride, and isolating the chiral diprotected triol compound having the formula:

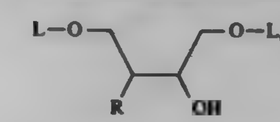

wherein L represents the substituted sulfonyl moiety;

(f) cyclizing the chiral diprotected triol compound by treatment with an arylmethylamine compound, and isolating the chiral pyrrolidine intermediate having the formula:

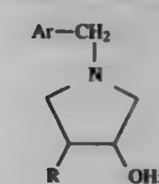

(g) replacing the hydroxyl group of the chiral pyrrolidine intermediate with an amino group by an amination reaction that inverts the chiral center, and isolating the chiral aminopyrrolidine compound having the formula:

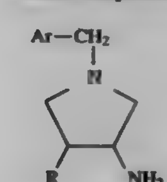

(h) derivatizing the amino group of the chiral aminopyrrolidine compound, and isolating the chiral substituted-aminopyrrolidine compound having the formula:

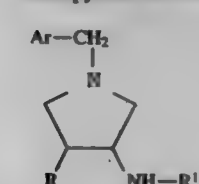

wherein R^1 is as defined above;

(i) deprotecting the ring nitrogen of the chiral substituted-aminopyrrolidine compound, and isolating the desired product.

5,703,245

PROCESS FOR REDUCING WATER AND POLAR IMPURITIES IN IMIDO-ALKANPERCARBOXYLIC ACIDS

Claudio Cavallotti; Gilberto Nucida, and Claudio Troglia, all of Milan, Italy, assignors to Ausimont, S.p.A., Italy

Filed Dec. 20, 1996, Ser. No. 777,697

Claims priority, application Italy, Dec. 21, 1995, MI95A2717

Int. Cl.^{6} C07D *209/48*

U.S. Cl. 548—473 17 Claims

1. Process for reducing the content of water in imido-alkanpercarboxylic acids having a content in water higher than 12% by weight, which comprises heating a suspension of imido-alkanpercarboxylc acid in water up to the complete solid melting and subsequent separation of an organic phase from an aqueous phase and recovery of the organic phase containing the imido-alkanpercarboxylic acid.

5,703,246

PROCESS FOR THE PREPARATION OF AN OXIRANE, AZIRIDINE OR CYCLOPROPANE

Varinder Kumar Aggarwal, Sheffield, United Kingdom; Hesham Nimer Hasan Abdel-Rahman, Nablus-Tubas, Israel, and Hee Yoon Lee, Daejon, Rep. of Korea, assignors to Zeneca Limited, London, England

PCT No. PCT/GB94/02280, § 371 Date Mar. 15, 1996, § 102(e) Date Mar. 15, 1996, PCT Pub. No. WO95/11230, PCT Pub. Date Apr. 27, 1995

PCT Filed Oct. 19, 1994, Ser. No. 617,755

Claims priority, application United Kingdom, Oct. 22, 1993, 9321803; Jun. 22, 1994, 9412496

Int. Cl.^{6} C07C *203/00*

U.S. Cl. 548—955 11 Claims

1. A process for the preparation of an oxirane, aziridine or cyclopropane of formula (I):

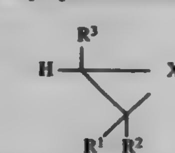

(I)

wherein, X is oxygen, NR^4 or CHR^5; R^1 is hydrogen, alkyl, aryl, heteroaromatic, heterocyclic or cycloalkyl; R^2 is hydrogen, alkyl, aryl, heteroaromatic, CO_2R^8, $CHR^{14}NHR^{13}$, heterocyclic or cycloalkyl; or R^1 and R^2 join together to form a cycloalkyl ring; R^3 is hydrogen, alkyl, aryl, heteroaromatic, CO_2R^8, $R^8{}_3Sn$, $CONR^8R^9$ or trimethylsilyl; R^4 and R^5 are, independently, alkyl, cycloalkyl, aryl, heteroaromatic, SO_2R^8, SO_3R^8, COR^8, CO_2R^8, $CONR^8R^9$ or CN, or R^4 can also be $P(O)(aryl)_2$; R^8 and R^9 are independently alkyl, aryl or arylalkyl; R^{13} and R^{14} are independently hydrogen, alkyl or aryl; the process comprising:

a) reacting a metallocarbon with a sulphide of formula SR^6R^7, wherein R^6 and R^7 are independently alkyl, aryl or heteroaromatic, or R^6 and R^7 join together to form a cycloalkyl ring which optionally includes an additional heteroatom; and,

b) reacting the product of step (a) with a compound of formula (II):

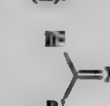

(II)

wherein R^1, R^2 and X are as defined above.

5,703,247
2-DEBENZOYL-2-ACYL TAXOL DERIVATIVES AND METHODS FOR MAKING SAME

David G. I. Kingston, Blacksburg, Va.; Ashok Gopal Chaudhary, St. Louis, Mo.; Milind Moreshwar Gharpure, Patparganj, India; John Matthew Rimoldi, and A. A. Leslie Gunatilaka, both of Blacksburg, Va., assignors to Virginia Tech Intellectual Properties, Inc., Blacksburg, Va.

Continuation-in-part of Ser. No. 30,612, Mar. 11, 1993, abandoned, and Ser. No. 29,759, Mar. 11, 1993, abandoned. This application Feb. 25, 1994, Ser. No. 202,108
Int. Cl.⁶ C07D *305/14*
U.S. Cl. 548—962 **22 Claims**

1. Taxol modified to possess a benzoyloxy group at the C-2 position of the B-ring of the tetracyclic taxane nucleus said benzoyloxy group bearing a substituent selected from the group consisting of halogens, amino, nitro, azido, cyano, acetyl, alkoxy of six carbons or fewer, aryloxy of six carbons or fewer, alkyl of six carbons or fewer, and substituted alkyl of six carbons of fewer.

5,703,248
PROCESS FOR THE SELECTIVE TRIHALOGENATION OF KETONES USEFUL AS INTERMEDIATES IN THE SYNTHESIS OF THIOPHENES

Jeffrey S. Rommel, 1503 Lakeside, Wheaton, Ill. 60187; James T. Traxler, 917 Forest Ave., Evanston, Ill. 60202, and Richard R. Boettcher, 21 W. 105 22nd St., Lombard, Ill. 60148

Continuation of Ser. No. 349,760, Dec. 5, 1994, abandoned, which is a continuation of Ser. No. 215,873, Mar. 21, 1994, abandoned, which is a continuation of Ser. No. 102,672, Aug. 5, 1993, abandoned, which is a continuation of Ser. No. 972,055, Nov. 5, 1992, abandoned, which is a continuation of Ser. No. 883,052, May 8, 1992, abandoned, which is a continuation of Ser. No. 527,606, May 22, 1990, abandoned. This application May 26, 1995, Ser. No. 451,285
Int. Cl.⁶ C07C *45/00;* **C07D** *333/00*
U.S. Cl. 549—62 **12 Claims**

10. A process for preparing N-(2,4-dimethylthien-3-yl)-N-(1-methoxyprop-2-yl)-chloracetamide comprising the steps of

a) cyclising in the presence of sulfide ions a compound of formula I

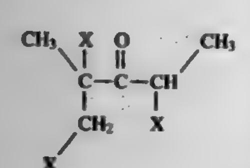

(I)

wherein each X is halogen to produce a compound of formula IVa or IVb;

b) reacting a compound of formula IVa or IVb with 1-methoxy-2-propylamine to produce N-(1-methoxyprop- 2-yl)-2,4-dimethylamino thiophene; and

c) N-chloracetylating N-(1-methoxyprop-2-yl)-2,4-dimethylamino thiophene with chloracetylchloride.

11. A process of claim 10 wherein the compound of formula I is prepared by halogenating a compound of formula II

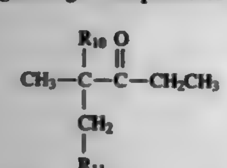

(II)

wherein R_{10} represents hydrogen and R_{11} represents hydroxy or R_{10} and R_{11} represent an extra bond, with molecular halogen in the presence of a compound of formula III

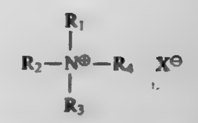

(III)

wherein X is halogen and each of R_1, R_2, R_3 and R_4 is independently hydrogen, or optionally substituted alkyl, phenyl, or benzyl wherein at least one of R_1, R_2, R_3, and R_4 is other than hydrogen.

5,703,249
BICYCLOALIPHATIC 2-METHYLENE-1,3-DIOXEPANES

Volker Rheinberger, Vaduz; Norbert Moszner, Eschen, both of Liechtenstein; Ulrich Salz, and Thomas Voelkel, both of Lindau, Germany, assignors to Ivoclar AG, Liechtenstein

Filed Oct. 25, 1995, Ser. No. 548,104
Claims priority, application Germany, Oct. 26, 1994, P4439485.3
Int. Cl.⁶ C07D *317/44;317/72*
U.S. Cl. 549—337 **17 Claims**

1. Bicycloaliphatic 2-methylene-1,3-dioxepanes having the general formula

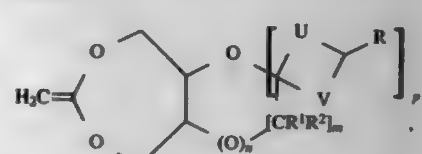

(I)

wherein

n and p each equal 0 or 1,

m equals 0 or 1,

U and V each mean oxygen or $(CH_2)_q$, wherein q is an integer from 0 to 3,

R, R^1 and R^2 each stand for hydrogen, an alkyl group, an alkenyl group, an aryl group or a cycloaliphatic radical and may each contain a further substituent from the group comprising alkyl, vinyl, acryl, acryloxy, methacryl, methacryloxy, $COOR^3$, $CONR_2{}^3$ and OR^3, and wherein R^3 stands for an alkyl group and/or aryl group, wherein one of the radicals R, R^1 or R^2 may be linked with a second 2-methylene-1,3-dioxepane ring having the formula (I), or R^1 and R^2 stands for a methylene group.

5,703,250
ODORANTS

Jerzy A. Bajgrowicz, Zurich, Switzerland, assignor to Givaudan-Roure (International) SA, Basel, Switzerland

Filed Sep. 3, 1996, Ser. No. 706,897
Claims priority, application European Pat. Off., Sep. 11, 1995, 95114280
Int. Cl.⁶ C07D *319/06*
U.S. Cl. 549—369 **25 Claims**

1. A compound of the formula:

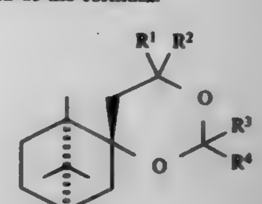

I

in which R^1, R^2 represent H or methyl and R^3, R^4 represent H, C_{1-4} alkyl or C_{2-4} alkenyl and wherein R^3 and R^4 together can also be butylidene.

5,703,251
METHOD OF PRODUCING A TOCOPHEROL PRODUCT

Jeffrey C. Hunsicker, Naperville, Ill.; John F. Verhoeven, Ivens, Utah, and F. Scott McCumm, Phoenix, Ariz., assignors to Henkel Corporation, Plymouth Meeting, Pa.

Continuation of Ser. No. 430,213, Apr. 26, 1995, abandoned. This application Aug. 29, 1996, Ser. No. 705,078
Int. Cl.⁶ C07D *311/72*
U.S. Cl. 549—410 **35 Claims**

1. A process of producing a coated tocopheryl succinate comprising:

contacting a tocopheryl succinate powder with a solution of a pharmaceutically acceptable binder, said tocopheryl succinate being maintained in a fluidized bed during said contacting by passage of a fluidizing gas through said bed, and

evaporating solvent from said contacted tocopheryl succinate in said fluidized bed, wherein the temperature of said fluidizing gas when introduced into said bed is sufficiently low such that the bed of tocopheryl succinate remains in a fluidized state during said contacting and said evaporating.

5,703,252
RECOVERY OF TOCOPHEROLS

Tracy K. Hunt, Kankakee, Ill., and Joerg Schwarzer, Hilden, Germany, assignors to Henkel Corporation, Plymouth Meeting, Pa.

Filed Nov. 25, 1996, Ser. No. 753,460
Int. Cl.⁶ C07D *311/72*
U.S. Cl. 549—413 **22 Claims**

1. A process useful in the recovery of tocopherols from a tocopherol mixture comprised of fatty acids and tocopherols, said process comprising esterifying free fatty acids present in said tocopherol mixture and transesterifying fatty acid glyceride esters present in said tocopherol mixture by mixing said tocopherol mixture with a lower alcohol in the presence of a zinc catalyst selected from the group consisting of zinc oxide, zinc hydroxide, and mixtures thereof, to form a reaction mixture in a reaction vessel, the temperature of said reaction mixture being above the atmospheric boiling point of said alcohol and the pressure within said reaction vessel being sufficient to maintain at least a major proportion of said alcohol in a liquid phase.

5,703,253
ETHYLENE OXIDE CATALYST AND PROCESS

Wayne E. Evans, Richmond, Tex., and Carolus Matthias Anna Maria Mesters, Amsterdam, Netherlands, assignors to Shell Oil Company, Houston, Tex.

Division of Ser. No. 366,069, Dec. 29, 1994, Pat. No. 5,597,773, which is a continuation of Ser. No. 176,044, Dec. 30, 1993, Pat. No. 5,418,202. This application Sep. 26, 1996, Ser. No. 721,643
Int. Cl.⁶ C07D *301/10*
U.S. Cl. 549—536 **15 Claims**

1. A process for the production of ethylene oxide comprising the steps of contacting ethylene in the vapor phase with an oxygen-containing gas at ethylene oxide forming conditions at a temperature ranging between about 180° C. and 330° C. in the presence of a catalyst comprising a porous refractory support having deposited thereon a catalytically effective amount of silver, a promoting amount of alkali metal, a promoting amount of rhenium, and a promoting amount of Group IVB metal applied to the support in the form of oxycation-containing compound(s), wherein said Group IVB metal is selected from the group consisting of titanium, zirconium, and hafnium.

5,703,254
PROPYLENE OXIDE PROCESS USING MIXED PRECIOUS METAL CATALYST SUPPORTED ON ALKALINE EARTH METAL CARBONATE

Anne M. Gaffney, West Chester; Andrew P. Kahn, Eagleville, and Rangasamy Pitchai, West Chester, all of Pa., assignors to Arco Chemical Technology, L.P., Greenville, Del.

Filed Oct. 2, 1996, Ser. No. 724,936
Int. Cl.⁶ C07D *301/03*
U.S. Cl. 549—536 **20 Claims**

1. A process for producing propylene oxide wherein a feedstream comprising oxygen and propylene is contacted in the vapor phase at a temperature of 180° C. to 350° C. with a supported catalyst comprising

(a) a support comprising an alkaline earth metal carbonate;

(b) a catalytically effective amount of silver;

(c) an amount of gold effective to improve selectivity to propylene oxide, wherein said gold is derived from a gold compound selected from the group consisting of gold hydroxide, gold carboxylates and mixtures thereof; and

(d) a promoting amount of a potassium promoter derived from a potassium salt comprising potassium cation and an anion selected from carbon oxyanions, nitrogen oxyanions and precursors thereof.

5,703,255
PROCESS FOR OBTAINING HIGHLY PURIFIED PHOSPHATIDYLCHOLINE

John D. Weete, Auburn, Ala., and George L. Griffith, Bethlehem, Pa., assignors to Emulsion Technology, Inc., Parrish, Ala.

Continuation of Ser. No. 77,684, Jun. 16, 1993, Pat. No. 5,453,523. This application Jun. 5, 1995, Ser. No. 463,238
Int. Cl.⁶ C07F *9/02*
U.S. Cl. 554—83 **7 Claims**

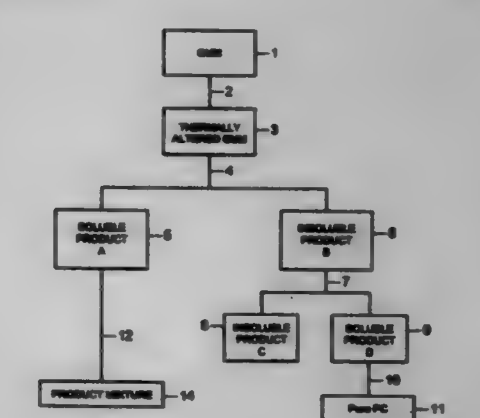

1. A process for obtaining purified phosphatidylcholine, which comprises

(i) degrading all non-choline phosphatides in a lecithin containing material by thermalization, and

(ii) recovering phosphatidylcholine from the thermalized product.

5,703,256

FUNCTIONALIZATION OF POLYMERS BASED ON KOCH CHEMISTRY AND DERIVATIVES THEREOF

Joseph Victor Cusumano, Watchung; William Daniel Diana, Belle Mead, both of N.J.; Jacob Emert, Brooklyn, N.Y.; Keith Raymond Gorda, Little York, N.J.; Richard H. Schlosberg, Baton Rouge, La.; David A. Young, Seattle, Wash.; Albert I. Yezrielev, Houston, Tex.; William Bernard Eckstrom, Fanwood, N.J.; Edris Eileen Manry, Prairieville, and Michael John Keenan, Baton Rouge, both of La., assignors to Exxon Chemical Patents Inc., Linden, N.J.

Continuation of Ser. No. 520,323, Aug. 28, 1995, abandoned, which is a division of Ser. No. 992,403, Dec. 17, 1992, abandoned. This application Dec. 16, 1996, Ser. No. 764,918

Int. Cl.^{6} C07C *63/00*

U.S. Cl. 554—224 **14 Claims**

1. A derivatized polymer composition comprising the reaction product of:

(A) a functionalized polymer of the formula:

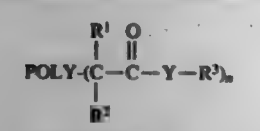

(I)

wherein POLY- is derived from unsaturated polymer, other than gem-structured polyolefin, the unsaturated polymer having a number average molecular weight prior to functionalization of from about 500 to about 20,000, n is a number greater than 0 and represents the functionality of the functionalized polymer, R^1 and R^2 are the same or different and are selected from the group consisting of hydrogen, hydrocarbyl, and polymeric hydrocarbyl, with the proviso that R^1 and R^2 are selected such that at least hydrogen, Y is selected from the group consisting of O and S, and R^3 is selected from H and hydrocarbyl; and the proviso that R^1 and R^2 are selected such that at least 50 mole percent of the

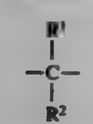

groups have both R^1 and R^2 not hydrogen,

Y is selected from the group consisting of O and S, and R^3 is selected from H and hydrocarbyl; and

(B) a derivatizing compound selected from the group consisting of polyamine, polyol and mixtures thereof.

5,703,257

SYNTHESIS OF CYCLOPENTADIENYL METAL COORDINATION COMPLEXES FROM METAL HYDROCARBYLOXIDES

Robert K. Rosen, Sugar Land, and Brian W.S. Kolthammer, Lake Jackson, both of Tex., assignors to The Dow Chemical Company, Midland, Mich.

Division of Ser. No. 186,402, Jan. 25, 1994, Pat. No. 5,504,223. This application Jun. 6, 1995, Ser. No. 469,185

Int. Cl.^{6} C07F *17/00;7/00;4/464*

U.S. Cl. 556—7 **15 Claims**

1. A process for preparing a metal dihydrocarbyl coordination complex corresponding to the formula:

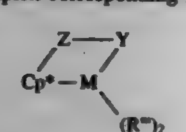

(II)

wherein:

M is titanium;

Cp* is a cyclopentadienyl group bound in an η^5 bonding mode to M or such a cyclopentadienyl group substituted with from one to four substituents selected from the group consisting of hydrocarbyl, silyl, germyl, halo, hydrocarbyloxy, amino, and mixtures thereof, said substituent having up to 20 nonhydrogen atoms, or optionally, two substituents together cause Cp* to have a fused ring structure;

Z is a divalent moiety comprising boron, or a member of Group 14 of the Periodic Table of the Elements, and optionally sulfur or oxygen, said moiety having up to 50 non-hydrogen atoms, and optionally Cp* and Z together form a fused ring system;

Y is a) a divalent anionic ligand group comprising nitrogen, phosphorus, oxygen or sulfur and having up to 20 non-hydrogen atoms, said Y being bonded to Z and M through said nitrogen, phosphorus, oxygen or sulfur, and optionally Y and Z together form a fused ring system, or b) a cyclopentadienyl group bound in an η^5 bonding mode to M or such a cyclopentadienyl group substituted with from one to four substituents selected from the group consisting of hydrocarbyl, silyl, germyl, halo, hydrocarbyloxy, amino, and mixtures thereof, said substituent having up to 20 nonhydrogen atoms, or optionally, two substituents together cause Y to have a fused ring structure; and

R''' independently each occurrence is a hydrocarbyl group;

the process comprising contacting in the presence of an aprotic organic diluent a metal coordination complex of formula:

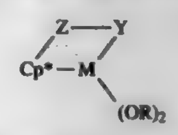

(I)

wherein R independently each occurrence is a hydrocarbyl group having from 1 to 20 carbon atoms and Cp*, Z, Y, M, are as defined for formula (II);

with a hydrocarbylation agent comprising a group 1, 2, 12 or 13 metal or metal derivative and at least one hydrocarbyl group R''', to form the metal dihydrocarbyl coordination complex of formula (II).

5,703,258

SILICON AND PHOSPHORUS CONTAINING COMPOSITIONS

David H. Blount, 6728 Del Cerro Blvd., San Diego, Calif. 92120

Continuation-in-part of Ser. No. 680,651, Jul. 16, 1996, which is a continuation-in-part of Ser. No. 160,176, Dec. 2, 1993, Pat. No. 5,563,285. This application Nov. 20, 1996, Ser. No. 752,787

Int. Cl.^{6} C07F *7/08;7/10*

U.S. Cl. 556—404 **23 Claims**

1. An organic silicon and phosphorus containing composition for reducing combustibility of an otherwise more flammable organic material comprising incorporating an organic silicon and phosphorus containing compound, with the otherwise more flammable material, under reaction conditions and in an amount sufficient to reduce the combustibility of the otherwise more flammable organic material, said organic silicon and phosphorus containing compound produced by reacting the following components:

A) silicon halides with a

B) phosphorus containing organic compound thereby producing an organic silicon and phosphorus halides compound, then reacting with an

C) organic compound that will react with a silicon halides compound thereby producing an organic silicon and phosphorus containing compound, then

D) basic compound in the amount of 0–50 parts by weight is added, then

E) water in the amount of 0–300 parts by weight.

5,703,259

METHOD FOR THE PREPARATION OF PURE CARBOXYETHYL GERMANIUM SESQUIOXIDE

Michael J. Arnold, 4521 Campus Dr., Suite 225, Irvine, Calif. 92715

Continuation-in-part of Ser. No. 204,548, Mar. 2, 1994, Pat. No. 5,386,046, and a continuation-in-part of Ser. No. 381,343, Jan. 31, 1995, Pat. No. 5,504,225. This application Dec. 22, 1995, Ser. No. 577,307

Int. Cl.^{6} C07F *7/30*

U.S. Cl. 556—89 **11 Claims**

1. A method of preparing organic germanium in the absence of any toxic level of germanium dioxide or metallic germanium composing;

preparing TPA as a crude reaction product from germanium tetrachloride including a step of solvent extraction using a halogenated solvent;

removing all but a minor amount of the original amount of halogenated solvent leaving a concentrated mixture of the TPA in mixture with a remaining minor amount of halogenated solvent;

mixing said concentrated mixture with an excess amount of a non-polar alkyl solvent at ambient temperature to form high purity crystals of TPA;

isolating the high purity crystals of TPA from the non-polar alkyl solvent;

converting the high purity crystals of TPA to carboxyethyl germanium sesquioxide.

5,703,260

PROCESS FOR THE PREPARATION OF ALKOXYTRIAZOLINONES

Heinz-Jürgen Wroblowsky, Langenfeld, and Klaus König, Odenthal, both of Germany, assignors to Bayer Aktiengesellschaft, Leverkusen, Germany

Division of Ser. No. 528,584, Sep. 15, 1995, Pat. No. 5,594,147. This application Sep. 16, 1996, Ser. No. 714,668

Claims priority, application Germany, Sep. 23, 1994, 44 33 966.6

Int. Cl.^{6} C07C *281/06*

U.S. Cl. 558—8 **4 Claims**

1. A semicarbazide derivative of the formula

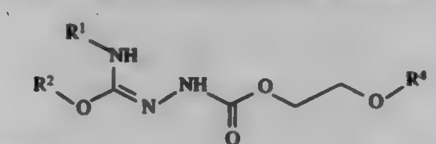

(IV)

in which

R^1 represents hydrogen, or represents alkyl, alkenyl or alkinyl, each of which has up to 6 carbon atoms and each of which is optionally substitued by halogen or C_1–C_4-alkoxy, or represents cycloalkyl or cycloalkylalkyl, each of which has 3 to 6 carbon atoms in the cycloalkyl moiety and, if appropriate, 1 to 4 carbon atoms in the alkyl moiety and each of which is optionally substituted by halogen or C_1–C_4-alkyl, or represents aryl or arylalkyl, each of which has 6 or 10 carbon atoms in the aryl moiety and, if appropriate, 1 to 4 carbon atoms in the alkyl moiety and each of which is optionally substituted by carboxyl, cyano, nitro, halogen, C_1–C_4-alkyl, C_1–C_4-halogenoalkyl, C_1–C_4-alkoxy, C_1–C_4-halogenoalkoxy or C_1–C_4 -alkoxy-carbonyl, and

R^2 represents alkyl, alkenyl or alkinyl, each of which has up to 6 carbon atoms and each of which is optionally substituted by halogen or C_1–C_4-alkoxy, or represents cycloalkyl or cycloalkylalkyl, each of which has 3 to 6 carbon atoms in the cycloalkyl moiety and, if appropriate, 1 to 4 carbon atoms in the alkyl moiety and each of which is optionally substituted by halogen or C_1–C_4-alkyl, or represents aryl or arylalkyl, each of which has 6 or 10 carbon atoms in the aryl moiety and, if appropriate, 1 to 4 carbon atoms in the alkyl moiety and each of which is optionally substituted by carboxyl, cyano, nitro, halogen, C_1–C_4-alkyl, C_1–C_4-halogenoalkyl, C_1–C_4-alkoxy, C_1–C_4-halogenoalkoxy or C_1–C_4 -alkoxy-carbonyl,

R^4 represents C_1–C_4-alkyl which is optionally substituted by C_1–C_4 alkoxy, phenoxy, or benzyloxy,

or a tautomeric compound thereof.

5,703,261

PROCESS FOR THE PRODUCTION OF SULFURIC ACID SEMI-ESTERS

Klaus Junghans, Berlin, Germany, assignor to Schering Aktiengesellschaft, Berlin, Germany

PCT No. PCT/EP94/03296, § 371 Date Jul. 10, 1996, § 102(e) Date Jul. 10, 1996, PCT Pub. No. WO95/10528, PCT Pub. Date Apr. 20, 1995

PCT Filed Oct. 6, 1994, Ser. No. 624,591

Claims priority, application Germany, Oct. 9, 1993, 43 34 823.8

Int. Cl.^{6} C07C *305/00*

U.S. Cl. 558—38 **3 Claims**

1. Process for the production of sulfuric acid semi-esters of general formula I

$$RO{-}SO_2{-}OH \qquad (I),$$

in which

R represents an organic radical, from hydroxy compounds of general formula II

$$R{-}OH \qquad (II),$$

in which

R has the same meaning as in formula I, characterized in that the latter is reacted in an inert solvent with a disulfuric acid salt of general formula III

$$O(SO_2OX)_2 \qquad (III),$$

in which

X symbolizes an alkali metal atom.

5,703,262

PROCESS FOR THE PREPARATION OF DITHIOPHOSPHORIC ACIDS

Terence Colclough, Abingdon; Philip Skinner, Wantage; John Derek Woollins, London, all of United Kingdom, and Paul Thomas Wood, Clemson, S.C., assignors to Exxon Chemical Patents Inc, Linden, N.J.

PCT No. PCT/EP90/00055, § 371 Date Apr. 6, 1993, § 102(e) Date Apr. 6, 1993, PCT Pub. No. WO90/07512, PCT Pub. Date Jul. 12, 1990

PCT Filed Jan. 9, 1990, Ser. No. 573,209

Int. Cl.^{6} C07F *9/18;9/17;9/165*

U.S. Cl. 558—112 **4 Claims**

1. A process for preparing a dithiophosphoric acid of the formula $(RO)_2PS_2H$, wherein R is derived from an aliphatic alcohol or phenol, comprising preparing a reaction mixture containing phosphorus sesquisulphide, sulphur, and one or more aliphatic alcohol or phenol wherein the overall atomic ratio of sulphur to phosphorus is at least 2.5 to 1, and refluxing the mixture at a temperature in the range of 85° to 150° C.

5,703,263

PROCESS FOR MAKING CHIRAL ALPHA-AMINO PHOSPHONATES AND SELECTED NOVEL CHIRAL ALPHA-AMINO PHOSPHONATES

John J. Talley, Chesterfield, Mo., assignor to Monsanto Company, St. Louis, Mo.

Division of Ser. No. 163,017, Dec. 7, 1993, which is a division of Ser. No. 898,253, Jun. 15, 1992, Pat. No. 5,321,153. This application Mar. 22, 1995, Ser. No. 408,237

Int. Cl.[6] C07F *9/40;9/38*

U.S. Cl. 558—170 **9 Claims**

1. A compound of the formula (II)

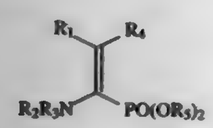

II

wherein R_1 is

(1) hydrogen;
(2) alkyl of from one to three carbons optionally substituted by one or two hydroxyl, chloro, or fluoro;
(3) cycloalkyl of from 3 to 7 ring carbons;
(4) phenyl optionally substituted by one to three substituent(s) consisting of
(a) alkyl of from one to four carbons,
(b) halogen consisting of fluoro, chloro, bromo, iodo,
(c) alkoxy of from one to three carbons,
(d) nitro,
(e) amido,
(f) mono- or di-alkyl (of from one to four carbons) amido;
(g) hydroxy;
(h) benzyloxy
(5) tolyl;
(6) tolyl, substituted by one to three substituents consisting of
(a) alkyl of from one to four carbons,
(b) halogen consisting of fluoro, chloro, bromo, iodo,
(c) alkoxy of from one to three carbons,
(d) nitro,
(e) amido,
(f) mono- or di-alkyl (of from one to four carbons) amido;
(g) hydroxy;
(7) naphthyl optionally substituted by one to three substituents consisting of
(a) alkyl of from one to four carbons,
(b) halogen consisting of fluoro, chloro, bromo, or iodo,
(c) alkoxy of from one to three carbons,
(d) nitro,
(e) amido,
(f) mono- or di-alkyl (of from one to four carbons) amido,
(g) hydroxy; or
(8) indol-3-yl, indol-2-yl, imidazol-4-yl;
(9) NHA where A is
(a) trityl,
(b) hydrogen,
(c) alkyl of from one to six carbons,
(d) $R_{10}CO$ wherein R_{10} is (A) hydrogen, (B) alkyl of from one to six carbons optionally substituted with hydroxyl, chloro, or fluoro, (C) phenyl or naphthyl unsubstituted or substituted with one to three of (i) alkyl of from one to three carbons, (ii) halogen wherein halogen is F, Cl, Br, or I, (iii) hydroxy, (iv) nitro, (v) alkoxy of from one to three carbons, (vi) $CON(R_{11})_2$ wherein R_{11} is independently hydrogen or alkyl of from one to four carbons, or (D) a 5 to 7 member heterocycle;
(e) phthaloyl wherein the aromatic ring is optionally substituted by one to three of (i) alkyl of from one to three carbons, (ii) halogen where halogen is F, Cl, Br, or I, (iii) hydroxy, (iv) nitro, (v) alkoxy of from one to three carbons, (vi) $CON(R_{11})_2$ wherein R_{11} is independently hydrogen or alkyl of from one to four carbons,
(f) $R_{12}(R_{13}R_{14}C)_mCO$ wherein m is one to three and R_{12}, R_{13}, and R_{14} are independently (A) hydrogen, (B) chloro or fluoro, (C) alkyl of from one to three carbons optionally substituted by chloro, fluoro, or hydroxy, (D) hydroxy, (E) phenyl or naphthyl optionally substituted by one to three of (i) alkyl of from one to three carbons, (ii) halogen where halogen is F, Cl, Br, or I, (iii) hydroxy, (iv) nitro, (v) alkoxy of from one to three carbons, (vi) $CON(R_{11})_2$ wherein R_{11} is independently hydrogen or alkyl of from one to four carbons, (F) alkoxy of from one to three carbons, (G) 5 to 7 member heterocycle or (H) R_{12}, R_{13}, and R_{14} are independently joined to form a monocyclic, bicyclic, or tricyclic ring system each ring of which is a cycloalkyl of from three to six carbons; except that only one of R_{12}, R_{13} and R_{14} can be hydroxy or alkoxy on the same carbon and cannot be hydroxy, chloro or fluoro when m is one;
(g) $R_{12}(R_{13}R_{14}C)_mW$ wherein m is independently 1 to 3 and W is OCO or SO_2 and R_{12},R_{13} and R_{14} are independently as defined above;
(h) $R_{20}W$ wherein R_{20} is a 5 to 7 member heterocycle selected from the group consisting of indolyl, pyridyl, furyl, and benziosoxazolyl;
(i) $R_{21}W$ wherein R_{21} is phenyl or naphthyl unsubstituted or substituted by one to three substituents of(i) alkyl of from one to three carbons, (ii) halogen where halogen is F, Cl, Br, or I, (iii) hydroxy, (iv) nitro, (v) alkoxy of from one to three carbons, (vi) $CON(R_{11})_2$ wherein R_{11} is independently hydrogen or alkyl of from one to four carbons;
(j) $R_{12}(R_{13}R_{14}C)_mP(O)(OR_{22})$ wherein R_{22} is alkyl of from one to four carbons or phenyl and R_{12}, R_{13} and R_{14} are independently as defined above;
(k) $R_{20}P(O)(OR_{22})$ wherein R_{20} and R_{22} are independently as defined above;
(l) $R_{21}P(O)(OR_{22})$ wherein R_{21} and R_{22} are independently as defined above;
(10) $R_{12}(R_{13}R_{14}C)_mV$ wherein V is O or NH and R_{12}, R_{13} and R_{14} are independently as defined above;
(11) $N(R_{11})_2$ wherein R_{11} is independently as defined above;
(12) $NR_{15}NR_{16}$ wherein R_{15} and R_{16} are joined to form a 4 to 6 membered saturated nitrogen containing heterocycle which is (i) azetidinyl, (ii) pyrrolidinyl, (iii) piperidinyl, or (iv) morpholinyl;
(13) $R_{17}OCH_2O$ wherein R_{17} is
(a) alkyl of from one to six carbons,
(b) R_{21} wherein R_{21} is independently defined as above; or
(c) CH_2Q_1 wherein Q_1 is phenyl, naphthyl or a 5 to 7 membered heterocycle as defined above;
(14) $R_{17}OCH_2CH_2OCH_2$ wherein R_{17} is independently as defined above;
(15) alkynyl of from two to six carbons optionally substituted with R_{21} wherein R_{21} is independently as defined above;
(16) alkenyl of from two to six carbons optionally substituted with R_{21} wherein R_{21} is independently as defined above;

R_2 and R_5 are independently hydrogen, alkyl, lower cycloalkyl, or ar wherein ar is an aromatic group;
R_3 is a protecting group; and
R_4 is hydrogen

with the overall proviso that when R_3 is formyl and R_5 is methyl or ethyl then R_1 cannot be hydrogen, methyl, hexyl, phenyl or phenylethenyl; that when R_3 is benzoyl and R_5 is ethyl, then R_1 cannot be phenyl, 4-chlorophenyl or hydrogen; and that when R_3 is acetyl or benzyloxycarbonyl and R_5 is ethyl, then R_1 cannot be hydrogen: with the further proviso that when R_3 is [5-[2-chloro-4-(trifluoromethyl)phenoxyl]-2-nitrobenzoyl], and R_5 is hydrogen or isopropyl, then R_1 cannot be 4-fluorophenyl.

5,703,264

PROCESS FOR PRODUCING ALIPHATIC NITRILE

Wataru Yoshida; Tetsuaki Fukushima; Hideki Taniguchi, and Hiroshi Abe, all of Wakayama, Japan, assignors to Kao Corporation, Tokyo, Japan

Filed Jun. 24, 1996, Ser. No. 670,787

Claims priority, application Japan, Jul. 6, 1995, 7-170758

Int. Cl.[6] C07C *253/00*

U.S. Cl. 558—316 **7 Claims**

1. A process for producing an aliphatic nitrile comprising reacting an aliphatic alcohol having 6 to 40 carbon atoms with ammonia:
(a) in the presence of a catalyst comprising copper, a transition metal element in the fourth period other than Cr and a platinum group element in the eighth group,
(b) under a reaction system pressure in the range of from atmospheric pressure to 100 atm,
(c) at a reaction system temperature in the range of from 100° to 250° C.,
(d) while introducing at least one gas selected from the group consisting of inert gases and hydrogen gas into the reaction system,
(e) removing water formed by the reaction out of the reaction system, and
(f) controlling the amount of the ammonia contained in the gas, exclusive of the water formed by the reaction, discharged out of the reaction system to 5 to 50% by volume based on the volume of the gas discharged, exclusive of the water formed by the reaction.

5,703,265

MONOFUNCTIONAL N—(2—CYANOETHENYL)SULFONAMIDES

John C. Wilson, and Peter S. Alexandrovich, both of Rochester, N.Y., assignors to Eastman Kodak Company, Rochester, N.Y.

Filed May 10, 1996, Ser. No. 644,758

Int. Cl.[6] C07C *255/00*

U.S. Cl. 558—390 **8 Claims**

1. A compound having the structure:

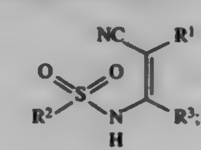

wherein

R^1 represents hydrogen; alkyl containing from 1 to 20 carbons; cyano, cycloalkyl containing from 3 to 18 carbons, unsubstituted aromatic ring systems, aromatic ring systems substituted with alkyl, halo, nitro, cyano, hydroxy, alkoxy, carboxy, carboalkoxy, amino, dialkylamino, acyl, trihalomethyl or alkysulfonyl; heteroaromatic ring systems (a) having a solitary ring or 2 to 3 linked or fused rings, and (b) containing from 3 to 34 carbons; alkanoyl; alkoxycarbonyl; aminocarbonyl; alkylaminocarbonyl; aralkylaminocarbonyl; alkylsulfonyl; aroyl; aryloxycarbonyl; arylaminocarbonyl; aroyl, aryloxycarbonyl, arylaminocarbonyl, aralkylaminocarbonyl, arylsulfonyl, arylsulfonyl substituted with alkyl, hydroxy, alkoxy, carboxy, carboalkoxy, nitro, halo, cyano, amino, dialkylamino, acyl, trihalomethyl or alkylsulfonyl;

R^2 represents alkyl containing from 1 to 20 carbons, cycloalkyl containing from 3 to 18 carbons; unsubstituted aromatic ring systems; aromatic ring systems substituted with alkyl, hydroxy, alkoxy, carboxy, carboalkoxy, nitro, halo, cyano, amino, dialkylamino, acyl, trihalomethyl or alkylsulfonyl; heteroaromatic ring systems (a) having a solitary ring or 2 to 3 linked or fused rings and (b) containing from 3 to 34 carbons; and

R^3 represents alkyl containing from 1 to 20 carbons, cycloalkyl containing from 3 to 18 carbons; unsubstituted aromatic ring systems; aromatic ring systems substituted with alkyl, hydroxy, alkoxy, carboxy, carboalkoxy, nitro, halo, cyano, amino, dialkylamino, acyl, trihalomethyl or alkylsulfonyl; heteroaromatic ring systems (a) having a solitary ring or 2 to 3 linked or fused rings and (b) containing from 3 to 34 carbons, unsubstituted ethenyl, ethenyl substituted with alkyl containing from 1 to 20 carbons, aryl containing from 5 to 10 carbons or aryl substituted with alkyl, hydroxy, carboxy, carboalkoxy, nitro, halo, cyano, amino, dialkylamino, acyl, trihalomethyl, or alkylsulfonyl.

5,703,266

3-SUBSTITUTED PARA-AMINOPHENOLS

Alain Lagrange, Coupvray; Jean Jacques Vandenbossche, Sevran; Jean Cotteret, Verneuil-sur-Seine, and Marie Pascale Audousset, Levallois-Perret, all of France, assignors to L'Oreal, Paris, France

Continuation of Ser. No. 374,694, Jan. 25, 1995, abandoned. This application Dec. 2, 1996, Ser. No. 759,843

Claims priority, application France, May 25, 1993, 93 06231

Int. Cl.[6] C07C *215/74*

U.S. Cl. 558—408 **2 Claims**

1. 3-substituted para-aminophenol having the formula:

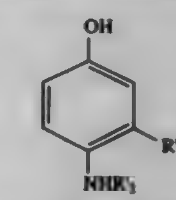

(I')

where R'_1 represents a C_1–C_4 alkyl radical, a C_2–C_4 alkenyl radical, a C_1–C_6 monohydroxyalkyl, a C_2–C_6 polyhydroxyalkyl radical, a C_2–C_6 alkoxyalkyl radical, a C_1–C_4 cyanoalkyl radical, a C_1–C_4 halogenoalkyl radical, an aminoalkyl radical having the formula:

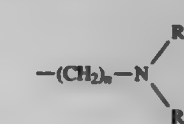

(II)

where:

n is a whole number from 1 to 6 inclusive;
R_3 and R_4, which may be identical or different, represent a hydrogen atom or a C_1–C_4 alkyl radical, a C_1–C_4 hydroxyalkyl radical or a C_1–C_6 acyl radical;
R'_2 represents a hydrogen atom, a C_1–C_6 alkyl radical, a C_1–C_6 monohydroxyalkyl radical or a C_2–C_6 polyhydroxyalkyl radical,

provided that:

when R'_2 represents a hydrogen atom, R'_1 does not represent an alkyl, vinyl, dichloromethyl, or trifluoromethyl radical;
when R'_1 represents a methyl radical, R'_2 does not represent an ethyl radical,

or an addition salt thereof with an acid.

5,703,267

PROCESS FOR PRODUCING 2-CYANOACRYLIC ACID

Shin Takahashi; Yoshiharu Ohashi; Yushi Ando, and Toshio Okuyama, all of Nagoya, Japan, assignors to Toagosei Co., Ltd., Tokyo, Japan

Filed Mar. 26, 1996, Ser. No. 621,612

Claims priority, application Japan, Mar. 27, 1995, 7-092969

Int. Cl.[6] C07C *255/03*

U.S. Cl. 558—451 **15 Claims**

1. A process for producing a 2-cyanoacrylic acid which comprises subjecting a 2-cyanoacrylate and an organic acid to a transesterification reaction at a temperature of 40°–90° C.

5,703,268

ACRYLONITRILE RECOVERY PROCESS

Paul Trigg Wachtendorf, Wapakoneta; Sanjay Parushottam Godbole, Solon, and Jeffrey Earle Rinker, Elida, all of Ohio, assignors to The Standard Oil Company, Cleveland, Ohio

Filed Apr. 8, 1996, Ser. No. 629,129

Int. Cl.^{6} C07C *255/08*

U.S. Cl. 558—466 **8 Claims**

1. A process for the recovery of acrylonitrile or methacrylonitrile obtained from the reactor effluent of an ammoxidation reaction of propylene or isobutylene comprising passing the reactor effluent through an absorber column, a recovery column operating at a first top pressure of no greater than 5 psig and fitted with an overhead line to remove product acrylonitrile or methacrylonitrile for further purification and recovery and a stripper column wherein the improvement comprises placing a pressure control means on the overhead line and adjusting the pressure control means to increase the first top pressure to a second top pressure which is between about 0.1 to 5 psi greater than the first top pressure to improve the hydraulic capacity of the recovery and stripper columns.

5,703,269

PROCESS FOR PREPARING AROMATIC OLEFINS

Wolfgang A. Herrmann, Freising; Jakob Fischer, Kirchdorf; Martina Elison, and Christian Köcher, both of München, all of Germany, assignors to Hoechst Aktiengesellschaft, Germany

Filed Dec. 29, 1995, Ser. No. 581,397

Claims priority, application Germany, Dec. 29, 1994, 44 47 068.1

Int. Cl.^{6} C07C *67/343;69/738;09/734;69/618*

U.S. Cl. 560—19 **27 Claims**

1. A process for preparing monofunctional, difunctional, or polyfunctional aromatic olefins by reaction of haloaromatics with olefins, wherein said reaction is carried out at temperatures of 20° to 220° C. in the presence of catalysts of the formula

$$[L_aPd_bX_c]^nA_n \qquad (I)$$

wherein the X's are monodentate or multidentate, charged or uncharged ligands bound to palladium as a central atom; and L, which is bound as a ligand to said central atom, is at least one monocarbene selected from the group consisting of

(II)

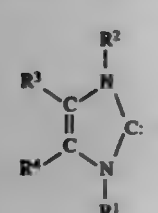

and

(III)

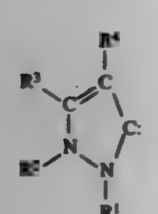

or at least one dicarbene selected from the group comprising

(IV)

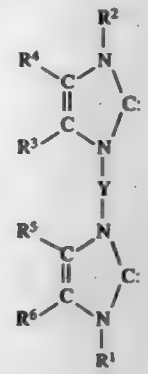

and

(V)

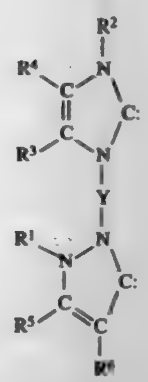

wherein R^1, R^2, R^3, R^4, R^5 and R^6 are individually straight or branched chain, sulfonated or unsulfonated alkyl radicals having 1 to 7 carbon atoms, sulfonated or unsulfonated aliphatic monocyclic or polycyclic radicals having 5 to 18 carbon atoms; sulfonated or unsulfonated alkenyl radicals having 2 to 5 carbon atoms; sulfonated or unsulfonated aryl radicals having 6 to 14 carbon atoms; or sulfonated or unsulfonated arylalkyl radicals having 7 to 19 carbon atoms; R^3, R^4, R^5, and R^6 may also be hydrogen, R^3 together with R^4, and R^5 together with R^6, may individually be fused and sulfonated or unsulfonated radicals having 3 to 7 carbon atoms; R^1, R^2, R^4, or R^6 can form a ring with ligands X, Y is a saturated or unsaturated, straight or branched chain alkylidene having 1 to 4 carbon atoms, dialkylsilylene- or tetraalkyldisilylene; A is a singly charged anion or the chemical equivalent of a multiply charged anion; b is an integer from 1 to 3; a is an integer from 1 to 4 times b, c= O or an integer from 1 to 4 times b, and n= O or an integer from 1 to 6.

5,703,270

METHOD FOR PREPARING A VINYL COMPOUND HAVING A HYDROXY GROUP

Koichi Nakagawa; Mitsuaki Makino, both of Himeji, and Yuichi Kita, Akashi, all of Japan, assignors to Nippon Shokubai Co., Ltd., Osaka, Japan

Filed Feb. 22, 1995, Ser. No. 394,013

Claims priority, application Japan, Feb. 25, 1994, 6-028447

Int. Cl.^{6} C07C *69/732*

U.S. Cl. 560—183 **43 Claims**

1. A method for preparing a vinyl compound having a hydroxy group of the formula (1)

$$CH_2{=}\underset{\displaystyle X}{\underset{|}{C}}{-}\underset{\displaystyle R}{\underset{|}{CH}}{-}OH \qquad (1)$$

wherein R is derived from an aldehyde series compound selected from the group consisting of formaldehyde, acetoaldehyde, propionaldehyde, butylaldehyde, valeraldehyde, isobutylaldehyde, pivalynaldehyde, cyclohexylaldehyde, cyclohexenealdehyde, benzaldehyde, tolualdehyde, anisaldehyde, furfural, trioxane, paraacetoaldehyde, and an oxymethylene compound of the formula

$$HO(CH_2O)_pY$$

wherein Y is a hydrogen atom, a straight-chain or branched-chain alkyl group of 1 to 8 carbons, or an optionally substituted cycloalkyl group of 3 to 10 carbons, and p is an integer of from 1 to 100; X is a —$COOR_0$ group and R_0 is a hydrogen atom or an organic residue selected from the group consisting of an alkyl group of 1 to 18 carbons, a cycloalkyl group of 3 to 10 carbons, an aryl group, a hydroxyalkyl group of 1 to 8 carbons, a —$(CH_2)_mNR_1R_2$ group, a —$(CH)_2N^+R_1R_2R_3.M^-$ group or a —$(C_2H_4O)_nR_4$ group, wherein R_1, R_2 and R_3 respectively represent straight-chain or branched-chain alkyl groups of 1 to 8 carbons, m is an integer of from 2 to 5, M^- is Cl^-, Br^-, CH_3COOO^-, $HCOO^-$, ½SO_4^{2-}, ⅓ PO_4^{3-}, R_4 is a straight-chain or branched-chain alkyl group of 1 to 18 carbons and n is an integer of from 1 to 80, comprising the step of:

reacting a vinyl compound of the formula (2)

$$CH_2{=}\underset{\displaystyle X}{\underset{|}{C}}{-}H \qquad (2)$$

wherein X is a —$COOR_0$ group; with an aldehyde series compound selected from the group consisting of formaldehyde, acetoaldehyde, propionaldehyde, butylaldehyde, valeraldehyde, isobutylaldehyde, pivalynaldehyde, cyclohexylaldehyde, cyclohexenealdehyde, benzaldehyde, tolualdehyde, anisaldehyde, furfural, trioxane, paraacetoaldehyde, and an oxymethylene compound of the formula

$$HO(CH_2O)_pY$$

wherein Y is a hydrogen atom, a straight-chain or branched-chain alkyl group of 1 to 8 carbons, or an optionally substituted cycloalkyl group of 3 to 10 carbons, and p is an integer of from 1 to 100; in a presence of a tertiary amine compound and water in a sufficient amount for obtaining an aqueous phase upon completion of the reaction.

5,703,271

METHOD OF UTILIZING ISOCYANATE LINKAGE FOR FORMING MULTI-TIER CASCADE POLYMERS

George R. Newkome, Temple Terrace, Fla., and Claus Weis, Pfeffingen, Switzerland, assignors to University of South Florida, Tampa, Fla.

Filed Apr. 2, 1996, Ser. No. 626,395

Int. Cl.^{6} C07C *69/34*

U.S. Cl. 560—190 **1 Claim**

1. A t-butyl isocyanate monomer of the formula

$$O{=}C{=}N{-}C(CH_2CH_2CO_2tbu)_3.$$

5,703,272

PROCESS FOR PREPARING A CARBOXYLIC ACID ESTER

Mariko Abe; Shuji Ebata; Takafumi Abe, and Hirofumi Higuchi, all of Niigata, Japan, assignors to Mitsubishi Gas Chemical Company, Inc., Tokyo, Japan

Division of Ser. No. 366,812, Dec. 30, 1994, Pat. No. 5,587,349. This application Sep. 3, 1996, Ser. No. 707,135

Claims priority, application Japan, Feb. 15, 1994, 6-18341

Int. Cl.^{6} C07C *69/02*

U.S. Cl. 560—231 **14 Claims**

1. A process for preparing a carboxylic acid ester which comprises subjecting a carboxylic acid and an alcohol or a phenol to an esterification reaction in the presence of a silica-titania catalyst, the silica-titania catalyst having been prepared by a process comprising adding an acidic solution containing a silicon compound and a titanium compound dissolved therein to a solution of a basic compound to bring about co-precipitation, wherein the acidic solution is a nitric acid-acidic solution or a sulfuric acid-acidic solution; a ratio of the amount (gram equivalent) of nitric acid or sulfuric acid to the amount (mol) of the silicon compound in the acidic solution is 0.5 to 50; and the amount of the titanium compound in the acidic solution is such that a ratio of titania (TiO_2) in the silica-titania catalyst is 1 to 50% by weight.

5,703,273

PROCESS FOR PREPARING N-PHOSPHONOMETHYLAMINO CARBOXYLIC ACIDS

Michael K. Stern, University City; Brian K. Cheng, Chesterfield; Jerry R. Ebner, St. Peters, and Dennis P. Riley, Ballwin, all of Mo., assignors to Monsanto Company, St. Louis, Mo.

Continuation of Ser. No. 428,972, Apr. 26, 1995, abandoned, which is a continuation-in-part of Ser. No. 269,722, Jul. 1, 1994, abandoned. This application Jul. 1, 1996, Ser. No. 674,211

Int. Cl.^{6} C07F *9/38*

U.S. Cl. 562—16 **41 Claims**

1. A process for preparing N-hydroxyalkylaminomethylphosphonic acid represented by the formula

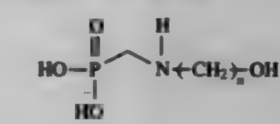

or salts thereof comprising:

(a) contacting an alkanolamine represented by the formula

$$H_2N{+}CH_2{)_n}{-}OH$$

wherein n is 2 to 6, formaldehyde and a trialkyl phosphite under suitable conditions of time and temperature to produce a reaction mixture wherein the molar ratio of alkanolamine to phosphite is about 1:1 to about 15:1, and

(b) hydrolyzing said reaction mixture under neutral, acidic or basic conditions.

5,703,274

PROCESS FOR THE PREPARATION OF 5-HYDROXYISOPHTALIC ACIDS

Mark Gelmont, Nesher; Joseph Bercovici, Kiriat Bialik, and Jakob Oren, Nesher, all of Israel, assignors to Bromine Compounds Ltd., Beer-Sheva, Israel

Filed Mar. 26, 1996, Ser. No. 621,533

Claims priority, application Israel, Mar. 27, 1995, 113142

Int. Cl.^{6} C07C *213/00*

U.S. Cl. 562—475 **12 Claims**

1. A process for the preparation of 5-hydroxyisephthalic acid (5-HIPA) that comprises hydrolyzing a starting material chosen from among 5-bromoisophthalic acid (5-BIPA), mixtures of 5-BIPA and dibromoisophthalic acid isomers, and salts of thereof in an aqueous alkaline solution, in the presence of a catalytically effective amount of a copper compound catalyst and in a temperature range of between 100° and 270° C.

5,703,275

Patent Not Issued For This Number

5,703,276
ONE-WINDOW CELL FOR TESTING PASSIVE REMOTE VAPOR DETECTORS
Dennis F. Flanigan, Baltimore, Md., assignor to The United States of America as represented by the Secretary of the Army, Washington, D.C.
Filed May 30, 1996, Ser. No. 655,525
Int. Cl.^{6} G01J *5/06;* **G01N** *21/61*
U.S. Cl. 73—1.02 **2 Claims**

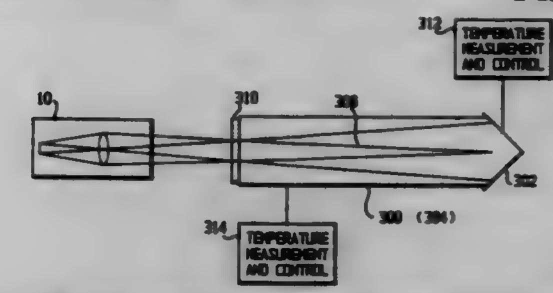

1. A one-window cell for testing passive remote vapor detectors comprising:
a cell body for containing a vapor, the cell body having a first end and a second end;
a blackbody radiation source for emitting radiation, the blackbody radiation source being attached to the first end of the cell body to seal the first end of the cell body;
a window, at least partially transparent to the radiation emitted by the blackbody radiation source, attached to the second end of the cell body to seal the second end of the cell body;
first temperature measurement and control means for measuring and controlling a temperature of the blackbody radiation source; and
second temperature measurement and control means for measuring and controlling a temperature of the vapor.

5,703,277
TORQUE TOOL TESTER MACHINE
Bosko Grabovac, Arcadia, Calif., assignor to Consolidated Devices, Inc., City of Industry, Calif.
Filed Nov. 5, 1996, Ser. No. 743,833
Int. Cl.^{6} G01L *25/00*
U.S. Cl. 73—1.12 **7 Claims**

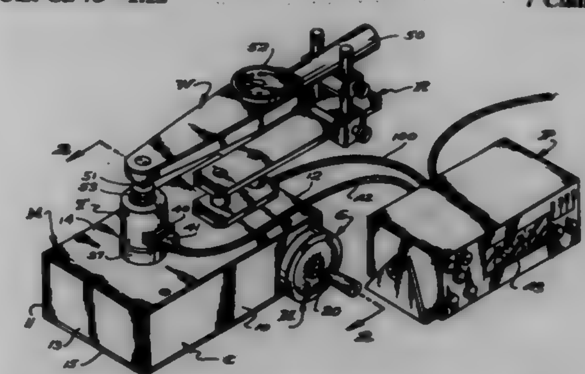

1. A torque tool testing machine including a case, a reaction device to hold a torque tool having a torque transmitting head and an applied torque indicating device in stationary position relative to the case, an electronic torque transducer with a torque transmitting device connected with the head and operating to emit a voltage that is proportional to torsional forces directed through it, a processor receiving and processing the voltage from the transducer and directing a voltage to a digital read-out device to cause that device to display the torsional forces directed through the transducer in digital force units; a reduction gear train comprising a series of related shafts and gears and including an out-put shaft in rotary driving engagement with the transducer, an input shaft with a manually engageable hand-wheel and at least one pair of related spur gear wheels on spaced apart parallel/shafts and each having elongate axially extending circumferentially spaced teeth that mesh when on a common tangential plane that extends between the gear wheels; stop means to stop advanced turning of the gear wheels in one direction and including a elongate plate with an outer-end portion, opposite sides, an elongate transversally extending inner-end parallel with the axes of the gears and oppositely disposed gear tooth engaging stop surfaces on planes that are parallel with said tangential plane; operating means connected with the plate to selectively move the plate between an outer position where it is spaced from interfering engagement with teeth on the gears to an inner position where its inner-end is stopped against one of the meshed teeth and where the advancing next to meshed teeth on the gears move circumferentially and inwardly into stopped engagement with their related stop surfaces of the plate; electric power drive means connected with and operable to drive the operating means to move the plate between its outer and inner positions, means connecting the drive means with the processor, the processor operates to cause the drive means to drive the operating means to move the plate from its outer position to its inner position when a voltage in the processor is reached that is proportional to the force directed through the transducer reaches a pre-determined set value.

5,703,278
PRESSURIZED FLUID DENSITY BALANCE
Robert J. Murphy, Jr., Kingwood, and James G. Anderson, Houston, both of Tex., assignors to Fann Instrument Company, Houston, Tex.
Filed May 3, 1996, Ser. No. 642,716
Int. Cl.^{6} G01N *9/00*
U.S. Cl. 73—30.01 **15 Claims**

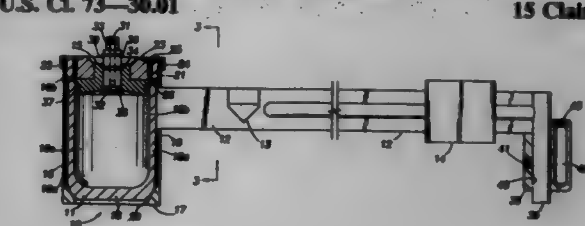

1. A pressurizable fluid balance instrument comprising:
a receptacle having a containment area defined by a bottom area, a wall structure and an opening into said containment area;
a pressure lid for closing said opening to form a pressure tight seal with said wall structure whereby said containment area may be pressurized to a pressure value above that existing externally of said containment area; and
a retaining structure having a base section, said retaining structure extending independently of said wall structure between said pressure lid and said base section for transmitting pressure induced forces tending to unseal said lid from said wall structure to said bottom area whereby said lid retains a pressure seal with said wall structure.

5,703,279
WATERPROOFNESS CHECKING JIG FOR A WATERPROOF CONNECTOR
Toshinori Igura, and Masaru Fukuda, both of Shizuoka, Japan, assignors to Yazaki Corporation, Tokyo, Japan
Division of Ser. No. 601,398, Feb. 14, 1996. This application Nov. 14, 1996, Ser. No. 748,662
Claims priority, application Japan, Feb. 17, 1995, 7-029139; Aug. 2, 1995, 7-197686
Int. Cl.^{6} G01M *3/02*
U.S. Cl. 73—40 **1 Claim**

1. A waterproofness checking jig for holding a waterproof connector comprising a connector housing with a terminal-accommodating chamber formed therein into which a terminal attached to an end of an insulated wire has been inserted from a first side of said connector housing, said terminal-accommodating chamber having been sealed by a waterproofing rubber stopper

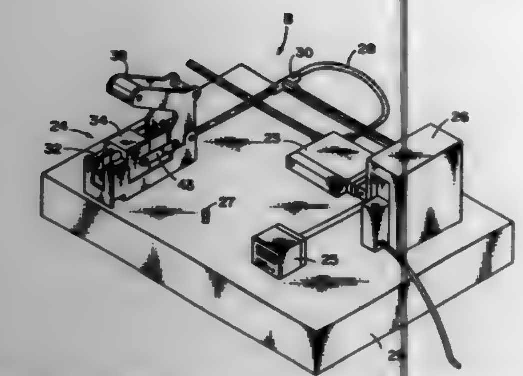

through which said insulated wire passes, said waterproofing checking jig comprising:

a framing;

a sub-holding block provided at one end of said framing for supporting said first side of said connector;

a connector-holding block provided slidable between said sub-holding block and the other end of said framing for engaging and holding in a watertight manner a second side of said connector at which said connector is fitted with a mating connector;

an air pipeway connected to said connector-holding block for depressurizing and pressurizing said connector through said connector-holding block; and

a rotatable lever provided with a toggle mechanism for moving said connector-holding block forwardly and backwardly between said sub-holding block and said the other end of said framing.

5,703,280

METHOD AND APPARATUS FOR CHECKING WATERPROOF CONNECTORS FOR WATERPROOFNESS

Toshinori Igura, and Masaru Fukuda, both of Shizuoka, Japan, assignors to Yazaki Corporation, Tokyo, Japan

Division of Ser. No. 601,398, Feb. 14, 1996. This application Nov. 19, 1996, Ser. No. 752,600

Claims priority, application Japan, Feb. 17, 1995, 7-029139; Aug. 2, 1995, 7-197686

Int. Cl.⁶ G01M *3/04*

U.S. Cl. 73—40 **4 Claims**

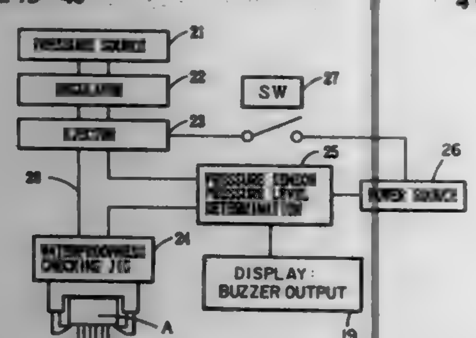

1. A method of checking a waterproof connector for waterproofness comprising a connector housing with a terminal-accommodating chamber formed therein into which a terminal attached to an end of an insulated wire has been inserted from a first side of said connector housing, said terminal-accommodating chamber having been sealed by a waterproofing rubber stopper through which said insulated wire passes, said method comprising the steps of:

engaging a connector-holding block in a watertight manner with a second side of said connector housing at which said connector is fitted with a mating connector; and

depressurizing an interior of said connector through said connector-holding block,

wherein during said depressurization of the interior of said connector, said terminal, if inserted incomplete, is sucked in one piece with said waterproofing rubber stopper into a fully-inserted position.

5,703,281

ULTRA HIGH VACUUM PUMPING SYSTEM AND HIGH SENSITIVITY HELIUM LEAK DETECTOR

Ganapati Rao Myneni, Yorktown, Va., assignor to Southeastern Univ. Research Assn., Newport News, Va.

Filed May 8, 1996, Ser. No. 646,773

Int. Cl.⁶ G01M *3/20*

U.S. Cl. 73—40.7 **18 Claims**

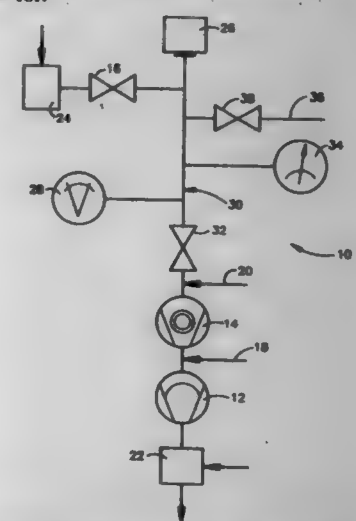

1. A method of detecting a helium leak including the steps of:

(1) providing a pumping system including a roughing stage, a finishing stage, an evacuator pump, an exhaust pump, a dry nitrogen feed to the inlet of the roughing stage and finishing stage, a vacuum gauge, a common manifold, a purge nitrogen flow, a trace gas detector, an evacuator isolation valve between the evacuator pump and the common manifold, a purge nitrogen valve between the purge nitrogen feed and the common manifold, a pumping system isolation valve between the common manifold and the roughing and finishing stages, a test stand, and a test vessel;

(2) closing said evacuator isolation valve, said pumping system isolation valve, and said purge nitrogen valve;

(3) starting said evacuator pump, said exhaust pump, said roughing stage, and said finishing stage;

(4) providing dry nitrogen gas to said purge nitrogen flow and to said nitrogen feed to the roughing stage and finishing stage;

(5) connecting said test vessel to said test stand;

(6) opening said evacuator isolation valve;

(7) allowing said evacuator pump to pump said common manifold down to a rough vacuum on the order of 20 torr;

(8) opening said purge nitrogen valve and purging said common manifold and said test vessel twice with dry nitrogen from said purge nitrogen flow;

(9) turning off said purge nitrogen flow by closing said purge nitrogen valve;

(10) pumping said common manifold and said test vessel down to a rough vacuum on the order of 20 torr with said evacuator pump;

(11) closing said evacuator isolation valve;

(12) opening said pumping system isolation valve;

(13) allowing said pumping system to evacuate the system until said vacuum gauge on said common manifold reads in the range of 10^{-6} torr;

(14) turning said trace gas detector on;

(15) spraying helium tracer gas on the outer surface of said test vessel; and

(16) reading the output of said trace gas detector.

5,703,282

PRESSURE SENSOR FOR PRESSURE DETECTION IN COMBUSTION CHAMBER OF INTERNAL COMBUSTION ENGINE

Matthias Kuesell, Kornwestheim; Andreas Duell, Stuttgart; Karl Bender, Tuebingen, and Kay Borchert, Steinheim, all of Germany, assignors to Robert Bosch GmbH, Stuttgart, Germany

Filed Oct. 16, 1996, Ser. No. 734,240

Claims priority, application Germany, Oct. 19, 1995, 195 38 854.2

Int. Cl.⁶ G01L *23/08*

U.S. Cl. 73—115 **10 Claims**

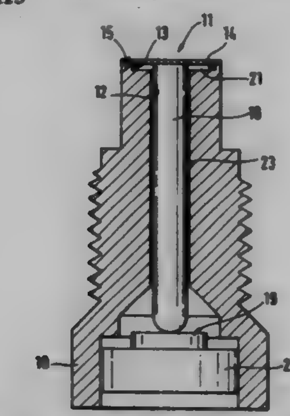

1. A pressure sensor for pressure detection in a combustion chamber of internal combustion engines of motor vehicles, comprising a housing provided with an opening; a measuring element; a plunger arranged in said opening of said housing and having one end acting on said measuring element so that a measuring signal is produced proportionally to a pressure to be determined, said plunger directly abutting against said measuring element and having a material with a yielding point which is smaller than a breaking limit of a material of said measuring element, said end of said plunger which acts on said measuring element being spherical and directly abutting against said measuring element with such a contact surface that occurring stresses do not exceed a predetermined nominal value.

5,703,283

DETRENDING ENGINE POSITIONAL DATA FOR ROTATING POSITION ENCODERS

Michael A. McClish, Northville; Marvin L. Lynch, Detroit; Margaret A. Selfe, Farmington Hills; Gregory Steinl, Royal Oak, and Donald J. Remboski, Jr., Dearborn, all of Mich., assignors to Motorola Inc., Schaumburg, Ill.

Filed Nov. 24, 1995, Ser. No. 562,532

Int. Cl.⁶ G01M *15/00*

U.S. Cl. 73—116 **21 Claims**

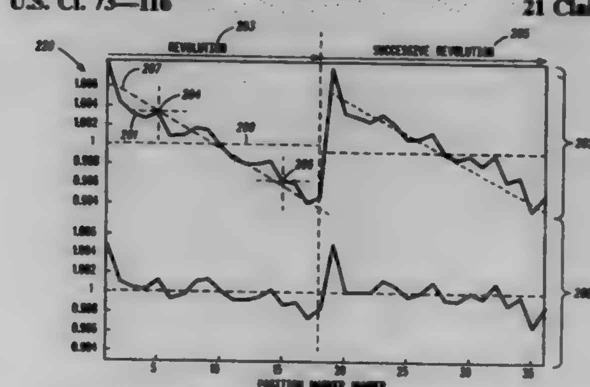

1. A method for detrending engine position data for rotating position encoders coupled to an engine comprising the steps of:

acquiring engine position data over a plurality of consecutive engine revolutions as the engine is decelerating;

determining a continuously decelerating trend in the acquired engine position data consistent with behavior occurring at a frequency of less than one cycle per engine revolution; and

providing corrected engine position data by eliminating the determined continuously decelerating trend from the acquired engine position data.

5,703,284

DEVICE FOR TESTING NON-UNIFORM WEAR ON TREAD STRIPS OF PNEUMATIC VEHICLE TIRES

Bernhard Gerhards, Aachen; Hans-Jürgen Krott, Monschau, and Wilhelm Thissen, Stolberg, all of Germany, assignors to Uniroyal Englebert Reifen GmbH, Aachen, Germany

Filed Mar. 1, 1996, Ser. No. 609,393

Claims priority, application Germany, Mar. 3, 1995, 195 07 441.6

Int. Cl.⁶ E01C *23/00;* **G01M** *17/02*

U.S. Cl. 73—146 **14 Claims**

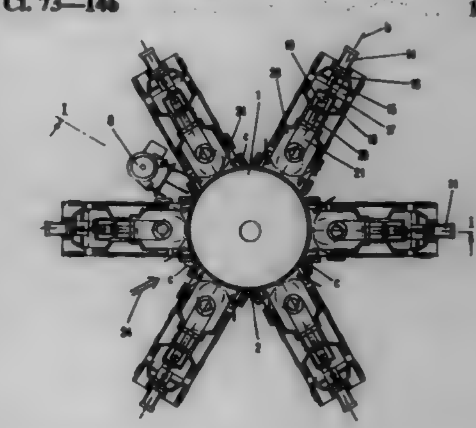

1. A device for simulating non-uniform wear on a tread strip of a pneumatic vehicle tire, said device comprising:

a support structure;

a friction body having radial symmetry connected to said support structure so as to be rotatable about a first axis of rotation;

said friction body having a rigid circumferential mantle surface with a circumferentially continuous, permanent friction coating;

a receptacle rotatably connected to said support structure for receiving a vehicle wheel including a pneumatic vehicle tire, wherein the vehicle wheel is rotated about a second axis of rotation with said receptacle;

a load-applying member connected to said receptacle;

said load-applying member extending radially relative to said friction body and acting radially onto said receptacle for pressing the pneumatic vehicle tire of the vehicle wheel onto said friction coating for generating wear at the pneumatic vehicle tire; and

a first control means including a motor for pivoting said second axis of rotation of the vehicle wheel about a first pivot axis, extending perpendicular to said first axis of rotation, from a position parallel to said first axis of rotation into a position at an angle to said first axis of rotation for simulating a positioning angle of the vehicle wheel selected from a camber angle and a kingpin inclination angle.

5,703,285

DIAGNOSIS APPARATUS AND METHOD FOR AN EXHAUST GAS RECIRCULATION UNIT OF AN INTERNAL COMBUSTION ENGINE

Hirokazu Shimizu, and Kenichi Machida, both of Atsugi, Japan, assignors to Unisia Jecs Corporation, Kanagawa-ken, Japan

Filed Jul. 2, 1996, Ser. No. 674,415

Claims priority, application Japan, Jul. 10, 1995, 7-173519

Int. Cl.[6] F02M *25/07;* **G01M** *15/00*

U.S. Cl. 73—118.1 **20 Claims**

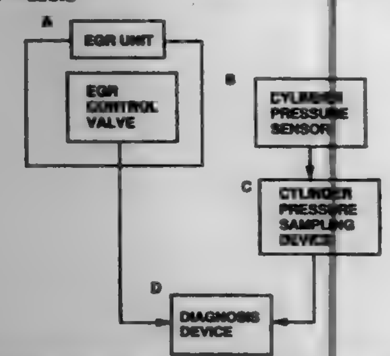

1. A diagnosis apparatus for an exhaust gas recirculation unit of an internal combustion engine wherein a portion of the exhaust gas is recirculated back to an intake system via an exhaust gas recirculation passage in which is disposed an exhaust gas recirculation control valve, said apparatus comprising:

a cylinder pressure sensor for detecting a cylinder pressure of the engine;

cylinder pressure sampling means for sampling the cylinder pressure detected by said cylinder pressure sensor within a pre-set crank angle during a compression stroke; and

diagnosis means for outputting a diagnosis signal indicating the presence or absence of a fault in said exhaust gas recirculation unit, based on the cylinder pressure sampled by said cylinder pressure sampling means and an open/close condition of said exhaust gas recirculation control valve for when said cylinder pressure was sampled.

5,703,286

METHOD OF FORMATION TESTING

Mark A. Proett, Missouri City; Wilson C. Chin, Houston, and Chih C. Chen, Plano, all of Tex., assignors to Halliburton Energy Services, Inc., Houston, Tex.

Filed Oct. 20, 1995, Ser. No. 546,251

Int. Cl.[6] E21B *49/00*

U.S. Cl. 73—152.05 **7 Claims**

1. A method of testing an underground formation, said method comprising the steps of:

disposing a formation testing device within a borehole adjacent a portion of said underground formation to be tested, said formation testing device having a probe for collecting fluid from said formation and having a transducer for measuring fluid pressure, said transducer being fluidically coupled to said probe by a flow line;

drawing fluid from said underground formation through said probe and into said formation testing device, and permitting fluid pressure within said formation testing device to build toward fluid pressure within said underground formation;

delivering an electrical signal from said transducer to a signal processor electrically coupled to said formation testing device, said electrical signal being correlative to fluid pressure of said fluid in said formation testing device;

generating an electrical plot in response to receiving said electrical signal, said electrical plot being correlative to fluid pressure of said fluid in said formation testing device over time; and

generating an electrical type-curve that approximates said electrical plot wherein said step of generating an electrical type curve comprises the steps of:

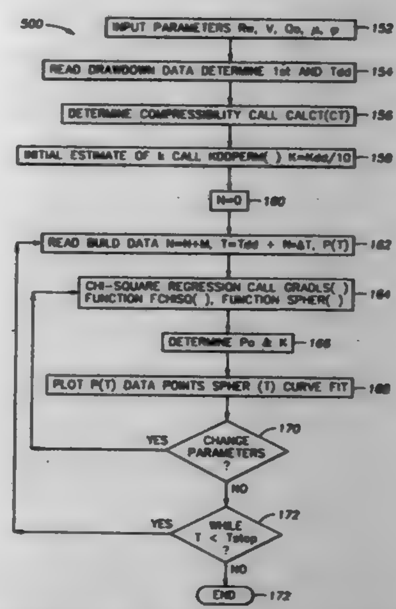

delivering signals R_w, V, Q_0, μ, and φ, corresponding to radius of said borehole, volume of said flowline, rate of fluid flow into said formation testing device, viscosity of said fluid, and porosity of said formation, respectively to said signal processor;

determining compressibility of said fluid, and delivering electrical signals C and c correlative thereto;

estimating permeability of said formation, and delivering an electrical signal k correlative thereto;

determining permeability of said formation and pressure of said formation by altering said electrical signals P, R_w, V, Q_0, μ, φ, C, c, and k according to:

$$P(R_w,t)-P_0=p(r_w,t)\left(\frac{VCQ_0\mu}{16\pi^2R_w^{\,4}k\phi c}\right),\text{ where}$$

$$p(r_w,t)=\left(\frac{1}{\beta_1-\beta_2}\right)\left(\frac{+\beta_1^{-1}-\beta_1^{-1}e^{(\beta_1^{\,2}t)}erfc(\beta_1\sqrt{t})}{-\beta_2^{-1}+\beta_2^{-1}e^{(\beta_2^{\,2}t)}erfc(\beta_2\sqrt{t})}\right);$$

$$\beta_1=+\frac{1}{2}-\frac{1}{2}\sqrt{1-\frac{4}{r_w}};$$

$$\beta_2=+\frac{1}{2}+\frac{1}{2}\sqrt{1-\frac{4}{r_w}};$$

$$r_w=\frac{4\pi R_w^{\,3}\phi c}{VC}(1+\gamma);\text{ and}$$

$$t=t\left(\frac{16\pi^2R_w^{\,4}k\phi c}{V^2C^2\mu}\right).$$

5,703,287

MEASURING ELEMENT FOR A FLOW SENSOR

Christoph Treutler, Wannweil; Rolf Benz, Reutlingen; Horst Muenzel, Reutlingen; Steffen Schmidt, Reutlingen; Eckart Reihlen, Reutlingen, and Andreas Lock, Reutlingen, all of Germany, assignors to Robert Bosch GmbH, Stuttgart, Germany

Filed Mar. 26, 1996, Ser. No. 622,717

Claims priority, application Germany, Mar. 29, 1995, 1 95 11 590.2

Int. Cl.[6] G01F *1/68*

U.S. Cl. 73—204.26 **7 Claims**

1. A measuring element for a flow sensor, the measuring element attaching to a bonding wire, comprising:

a membrane;

a platinum layer;

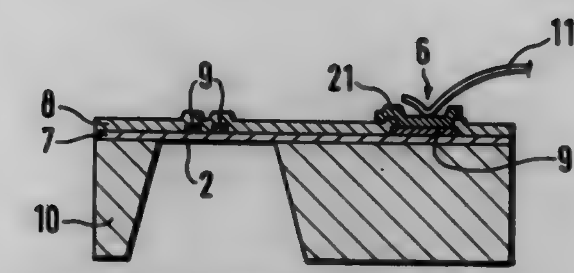

at least one heater arranged on the membrane;

at least one temperature sensor arranged on the membrane, the temperature sensor being patterned out of the platinum layer;

at least one printed circuit trace for contacting the heater and the temperature sensor, the printed circuit trace being patterned out of the platinum layer; and

an interconnection region for attaching to the bonding wire, the interconnection region including a metal layer composed of a metal other than platinum.

5,703,288

THERMALLY-SENSITIVE TYPE FLOW METER HAVING A HIGH ACCURACY

Hiroyuki Horiguchi, Yokohama, and Yoshinobu Nakayama, Kawasaki, both of Japan, assignors to Ricoh Company, Ltd., Tokyo; Ricoh Elemex Corporation, Nagoya, and Ricoh Seiki Company, Ltd., Tokyo, all of Japan

Filed Jul. 17, 1996, Ser. No. 682,162

Claims priority, application Japan, Jul. 19, 1995, 7-182537; Jan. 25, 1996, 8-010922

Int. Cl.[6] G01F *1/68*

U.S. Cl. 73—204.26 **22 Claims**

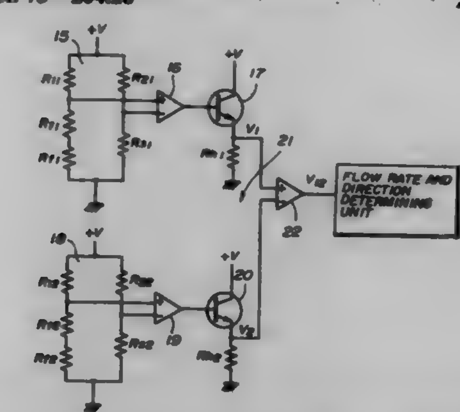

1. A thermally-sensitive type flow meter for measuring a flow rate of a fluid, said flow meter including a sensor chip comprising a substrate carrying sensing elements, said flow meter comprising:

first and second bridges formed over a depression formed on said substrate, said first and second bridges being arranged along the direction of flow so that said first bridge is positioned on an upstream side and said second bridge is positioned on a downstream side;

first and second resistors for generating a heat, said first and second resistors provided on the respective one of said first and second bridges, said first and second resistors being heated by the same voltage source;

first and second temperature measuring resistors provided adjacent to the respective one of said first and second resistors;

third and fourth temperature measuring resistors for measuring a temperature of the fluid, said third and fourth temperature measuring resistors being located at positions not influenced by a temperature of said first and second resistors;

a temperature control unit, including said first, second, third and fourth temperature measuring resistors, for controlling a temperature of each of said first and second resistors to be constant; and

a flow rate determining unit for determining a flow rate of the fluid flowing around said first and second bridges, a determination being made based on a voltage difference between a first voltage and a second voltage, said first voltage being measured across said first resistor, said second voltage being measured across said second resistor.

5,703,289

MICROWAVE TRANSMITTER HOUSING

Michael J. Mulrooney, Downers Grove, Ill., assignor to Magnetrol International, Inc., Downers Grove, Ill.

Filed Feb. 1, 1995, Ser. No. 382,389

Int. Cl.[6] G01S *13/00*

U.S. Cl. 73—290 V **25 Claims**

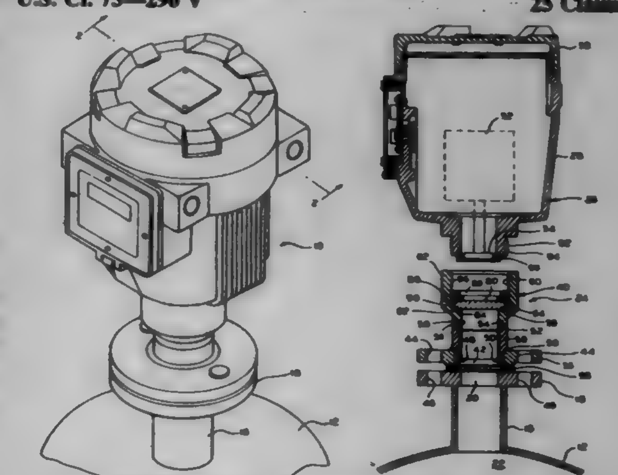

1. In a microwave level sensing instrument for sensing level of a process fluid in a process vessel, the process vessel including a vessel flange defining an opening into a storage space in the vessel, an improved housing assembly comprising:

a flange assembly including a housing flange having a distal gasket face sealingly mateable with the vessel flange, in use, and connected to a window housing for housing a window spaced from the gasket face and providing a process seal; and

an electronics housing mounted to said window housing, the electronics housing supporting a microwave antenna proximate the window for focusing energy through the window to the process fluid.

5,703,290

BOBBIN ASSEMBLY FOR A VEHICLE INSTRUMENT GAUGE

Chandresekar R. Karur, Plymouth; Ted A. Vanden Berg, Canton; Vivek A. Jairazbhoy, Farmington Hills, and Christopher Hitchen, West Bloomfield, all of Mich., assignors to Ford Motor Company, Dearborn, Mich.

Filed Jan. 16, 1996, Ser. No. 586,388

Int. Cl.[6] G01R *1/02*

U.S. Cl. 73—430 **1 Claim**

1. A bobbin assembly for use in a vehicle instrument gauge, comprising:

an upper and lower bobbin together defining a chamber therebetween and an axis of rotation therethrough;

a permanent magnet rotatably disposed within said chamber;

a shaft rotatably supporting said magnet within said chamber for rotative movement about said axis of rotation;

a viscous damping fluid carried in said chamber for damping the rotational movement of said magnet; and

said upper bobbin including a nose portion defining a bore therethrough which extends along said axis of rotation, said bore being open to said chamber and receiving said shaft therethrough, said nose portion further including an inner dam

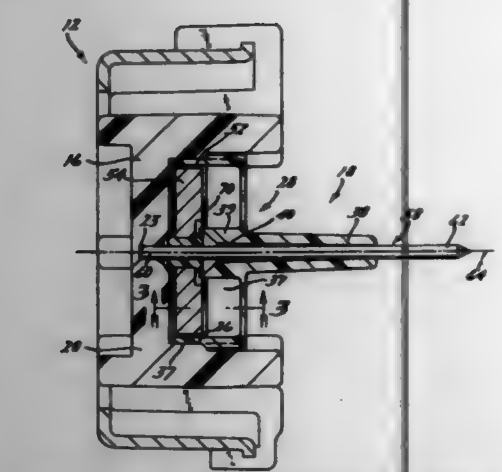

portion and two trough portions disposed within said chamber, said inner dam portion having a generally cylindrical continuous wall, said trough portions being in fluid communication with said chamber and extending radially outwardly from said inner dam portion so as to prevent leakage of said viscous damping fluid through said nose portion upon inadvertent inversion of said upper and lower bobbins.

5,703,291

POWER CLAMPING SYSTEM FOR MOUNTING/ SECURING OF AUTOMOTIVE WHEEL ASSEMBLIES ONTO WHEEL BALANCING MACHINES

Gerhard Rosteuscher, Belleville, Canada, assignor to Hofmann Werkstatt-Technik GmbH, Pfungstadt, Germany

Filed Mar. 12, 1996, Ser. No. 614,245

Claims priority, application Germany, Mar. 28, 1995, 195 11 405.1

Int. Cl.[6] G01M *1/06*

U.S. Cl. 73—487 **11 Claims**

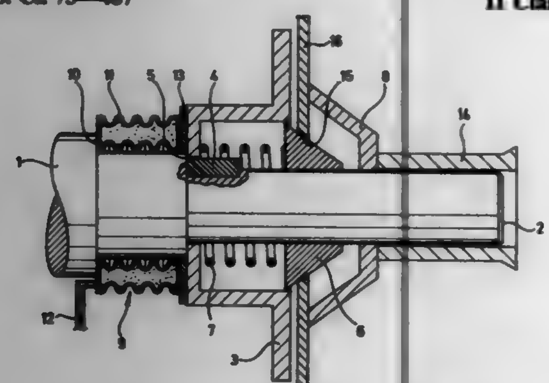

1. A clamping arrangement for clamping a rotary member to be balanced on a main shaft of a balancing machine, comprising a centering cone adapted to be axially resiliently supported on the main shaft for centering the rotary member with respect to the main shaft, a pressure element adapted to be fixed on the main shaft for pressing the rotary member against the centering cone into a centering position, a support flange member for holding the rotary member against the pressure element, means for mounting the support flange member non-rotatably and axially displaceably on the main shaft, and an actuating means for pressing the support flange member against a centeredly held rotary member so that said centeredly held rotary member can be clamped against the pressure element on the main shaft.

5,703,292

SENSOR HAVING AN OFF-FREQUENCY DRIVE SCHEME AND A SENSE BIAS GENERATOR UTILIZING TUNED CIRCUITS

Paul A. Ward, Roslindale, Mass., assignor to The Charles Stark Draper Laboratory, Inc., Cambridge, Mass.

Continuation-in-part of Ser. No. 219,023, Mar. 28, 1994, Pat. No. 5,481,914. This application Apr. 19, 1995, Ser. No. 425,960

Int. Cl.[6] G01P *9/04*

U.S. Cl. 73—504.02 **12 Claims**

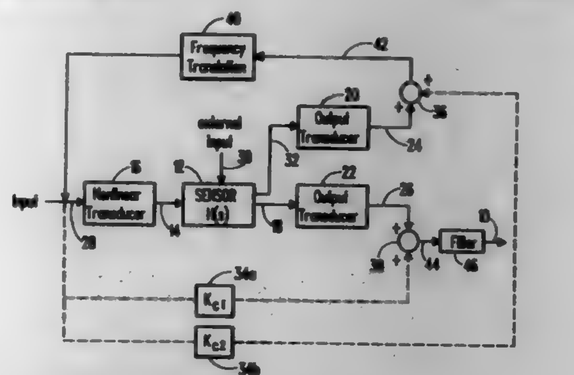

1. A sensor system comprising:

an input transducer receiving a drive signal and converting said drive signal into a force signal having a non-linear relationship with respect to said drive signal;

a sensor responsive to said force signal and an external stimulus for providing a first sensor output signal having a predetermined frequency and being indicative of said force signal and a second sensor output signal having said predetermined frequency and being indicative of said external stimulus;

a frequency translation circuit responsive to said first sensor output signal for suppressing a component of said first sensor output signal at said predetermined frequency to provide a frequency translated signal capable of producing a force at said predetermined frequency; and

a tuned circuit responsive to said frequency translated signal for generating said drive signal, wherein said tuned circuit comprises an inductor and a capacitor for amplifying said frequency translated signal, so as to increase the amplitude of said drive signal.

5,703,293

ROTATIONAL RATE SENSOR WITH TWO ACCELERATION SENSORS

Erich Zabler, Stutensee; Joerg Wolf, Karlsruhe, and Markus Lutz, Reutlingen, all of Germany, assignors to Robert Bosch GmbH, Stuttgart, Germany

Filed May 13, 1996, Ser. No. 645,375

Claims priority, application Germany, May 27, 1995, 195 19 488.8

Int. Cl.[6] G01P *9/00;* **G01C** *19/00*

U.S. Cl. 73—504.02 **7 Claims**

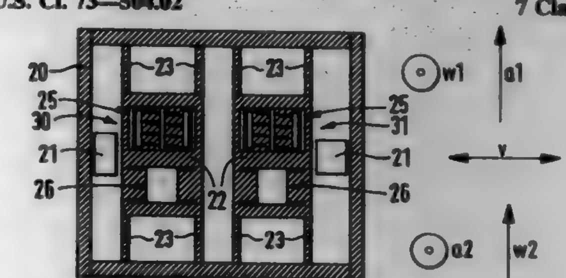

1. A rotational rate sensor comprising:

at least one vibrating weight;

an excitation device for inducing vibration of the vibrating weight;

a first deflectable weight arranged on the vibrating weight;

a first analyzer device for determining a deflection of the first deflectable weight;

a second deflectable weight arranged on the vibrating weight; and

a second analyzer device for determining a deflection of the second deflectable weight;

wherein directions of deflection of the first and second deflectable weights are not parallel to each other and are not parallel to a direction of vibration of the vibrating weight.

5,703,294

METHOD OF EVALUATING THE VIBRATION CHARACTERISTICS OF A SPORTING IMPLEMENT SUCH AS A GOLF CLUB

Kenneth G. McConnell, Ames, Iowa, and Guy M. Houser, Bainbridge Isl., Wash., assignors to Iowa State University Research Foundation, Ames, Iowa

Filed Dec. 29, 1995, Ser. No. 578,167

Int. Cl.[6] A63B *53/00*

U.S. Cl. 73—579 **13 Claims**

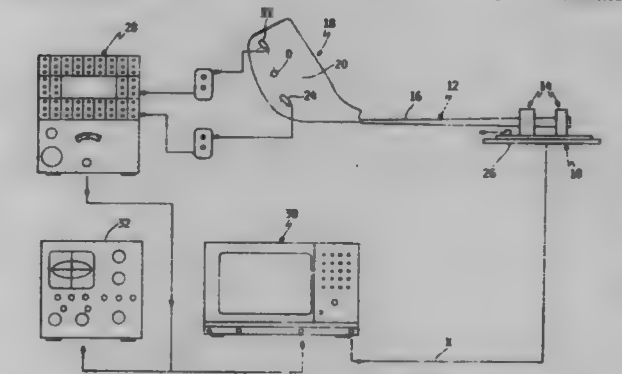

1. A method of evaluating the vibration characteristics of a sporting implement, wherein the sporting implement includes a shaft having a hitting member with the hitting member including a hitting face that is designed to impact with and propel an object, which comprises:

(a) identifying a plurality of the natural frequencies of vibration of the sporting implement which frequencies produce node lines on the hitting member; and

(b) locating relative to the face of the hitting member the node lines present on the hitting member for the natural frequencies identified in step (a).

5,703,295

VIBRATION SENSING METHOD AND APPARATUS THEREFOR

Naruo Ishida; Yoshio Saijyo; Shingo Arakawa, all of Fukuyama; Kimiaki Watanabe, and Hidehiro Inaba, both of Fujinomiya, all of Japan, assignors to NKK Corporation, Tokyo, and Kabushiki Kaisha Fuji Ceramics, Fujinomiya, both of Japan

Filed Nov. 28, 1995, Ser. No. 563,581

Claims priority, application Japan, Nov. 28, 1994, 6-292541

Int. Cl.[6] G01L *1/00;* **G01H** *13/00*

U.S. Cl. 73—593 **2 Claims**

1. A vibration sensing method comprising the steps of:

(a) sensing a signal corresponding to a vibrating acceleration, and outputting the signal;

(b) discriminating, usual a level discriminator, a level of the signal which is outputted in step (a) to generate an output when the level exceeds a preset reference level;

(c) displaying the output generated in step (b) on a display unit;

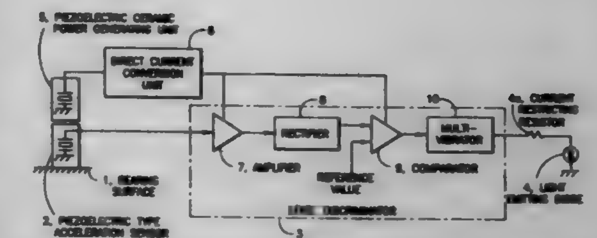

(d) providing a power generating unit having sheet-shaped piezoelectric ceramic elements arranged as a bimorph structure, one end of each of said piezoelectric ceramic elements being fixed, and a deadweight attached to another end of said piezoelectric ceramic elements, wherein the charge is generated by a bending vibration of said piezoelectric ceramic elements;

(e) generating a charge by the power generating unit when vibration is applied thereto;

(f) converting the charge generated by the power generating unit into DC power; and

(g) supplying the converted DC power to the level discriminator and to the display unit as spontaneously generated power.

5,703,296

PRESSURE SENSOR HAVING REDUCED HYSTERESIS AND ENHANCED ELECTRICAL PERFORMANCE AT LOW PRESSURES

Lewis Henry Little, Peru; Russell Bolin Hopkins, Greentown, and John Michael Matly, Kokomo, all of Ind., assignors to Delco Electronics Corp., Kokomo, Ind.

Filed Jun. 27, 1995, Ser. No. 590,710

Int. Cl.[6] G01L *7/00*

U.S. Cl. 73—756 **14 Claims**

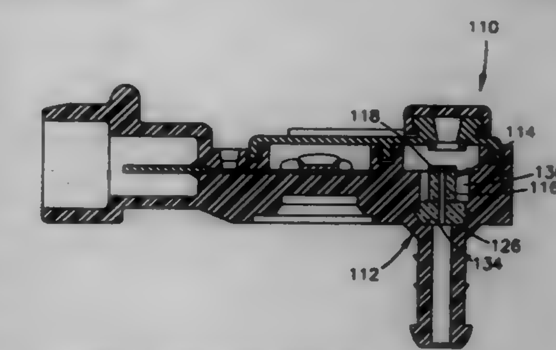

1. A pressure sensing device comprising:

a housing having a coefficient of thermal expansion;

a sensing element mounted to the housing, the sensing element being formed from a material whose electrical properties change in response to a pressure exerted on the sensing element by a surrounding environment, the material having a coefficient of thermal expansion that is different than the coefficient of thermal expansion of the housing;

a constraint member with which the sensing element is interconnected to the housing such that the sensing element is spaced apart from the housing, the constraint member having a coefficient of thermal expansion that is approximately equal to the coefficient of thermal expansion of the sensing element or intermediate the coefficients of thermal expansion of the sensing element and the housing; and

an insert disposed in the housing so as to be intermediate the constraint member and the housing, the insert having a peripheral surface of which at least a portion contacts the housing, the insert having a coefficient of thermal expansion that is approximately equal to the coefficient of thermal expansion of the sensing element or intermediate the coefficients of thermal expansion of the sensing element and the housing, such that the sensing element and the constraint

member are substantially isolated from external stresses transmitted through the housing.

5,703,297
SYSTEM FOR DETERMINING THE EXIT DIRECTION OF A FLEXIBLE SUPPLY LINE FROM AN AUTONOMOUS MOBILE UNIT
Rudolf Bauer, Neubiberg, Germany, assignor to Siemens Aktiengesellschaft, Munich, Germany
Filed Jul. 18, 1996, Ser. No. 683,226
Claims priority, application Germany, Jul. 18, 1995, 195 26 185.2
Int. Cl.⁶ G01L *7/00;* **E03B** *1/00*
U.S. Cl. 73—756 **20 Claims**

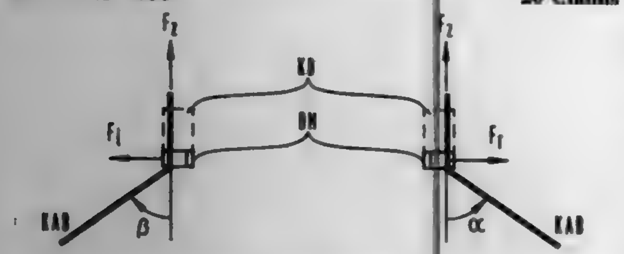

1. An apparatus having a flexible supply line and a system for determining a relative exit direction of the supply line therefrom, the system comprising:
a) guide means for guiding the supply line;
b) directional pressure sensor on the guide means for sensing a pressure exerted by the supply line in a particular direction and emitting a corresponding directional pressure signal;
c) a winding apparatus for storing a variable unfed length of the supply line, the winding apparatus sensing a degree of winding of the supply line and emitting a corresponding winding signal;
d) evaluation means for evaluating the directional pressure signal emitted by the pressure sensor and determining said exit direction therefrom; and
e) a control computer for controlling a travel path of the apparatus based on the exit direction, the winding signal, and a movement history of the apparatus, such that the apparatus does not rum over the supply line.

5,703,298
MAGNETOSTRICTIVE TORQUE SENSING DEVICE
Yasuharu Odachi, and Katsufumi Tanaka, both of Kariya, Japan, assignors to Kabushiki Kaisha Toyoda Jidoshokki Seisakusho, Kariya, Japan
Filed Oct. 29, 1996, Ser. No. 739,464
Claims priority, application Japan, Nov. 27, 1995, 7-307786
Int. Cl.⁶ G02L *3/02*
U.S. Cl. 73—862.333 **19 Claims**

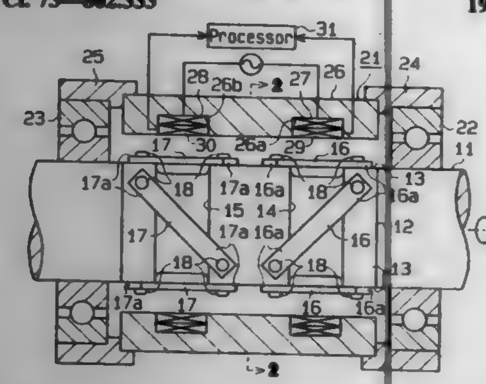

1. A device for detecting torque applied to a rotary shaft having a longitudinal axis and at least one substantially planar side surface, the device comprising:
a sensing piece including a magnetostrictive material, the sensing piece being attached to said planar side surface;
an exciting coil disposed so as to produce a magnetic flux in said sensing piece; and
a detecting coil disposed so as to detect the magnitude of the magnetic flux passing through said sensing piece.

5,703,299
EXHAUST STACK SENSOR PROBE
Finis E. Carleton, San Marino, and Joe W. Holtrop, Bakersfield, both of Calif., assignors to Corona Energy Partners, Ltd., Houston, Tex.
Filed Jun. 21, 1996, Ser. No. 667,393
Int. Cl.⁶ G01N *1/00*
U.S. Cl. 73—863.83 **11 Claims**

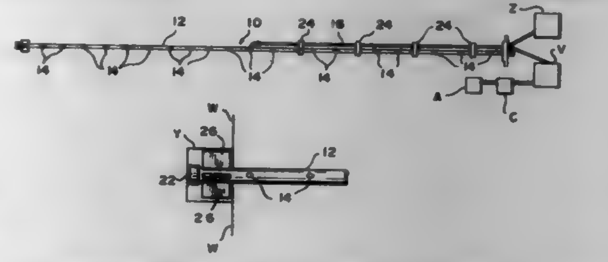

2. An exhaust stack stream sensor system comprising
a main hollow pipe with an interior enclosed within and defined by a main pipe wall, the main hollow pipe having a plurality of port holes each extending through the main pipe wall and spaced apart therealong, each of the port holes formed and disposed so that fluid in an exhaust stream of an exhaust stack exterior to the main hollow pipe is flowable into and through the plurality of port holes directly into the interior of the main hollow pipe, the main hollow pipe having two spaced apart closed off ends, the main hollow pipe positionable across the interior of the exhaust stack from which flows the exhaust stream,
vacuum apparatus,
a sample collecting tube connected to the main hollow pipe and having a first end in fluid communication with the interior of the main hollow pipe and a second end in fluid communication with the vacuum apparatus, the vacuum apparatus for drawing a portion of the exhaust stream through each port hole directly into the interior of the main hollow pipe and into and through the sample collecting tube, portions of the exhaust stream thus drawn forming a composite sample of the exhaust stream for transmission therefrom to additional apparatus, and
a plurality of straps interconnecting the main hollow pipe and the sample collecting tube.
3. An exhaust stack stream sensor system comprising
a main hollow pipe with an interior enclosed within and defined by a main pipe wall, the main hollow pipe having a plurality of port holes each extending through the main pipe wall and spaced apart therealong, each of the port holes formed and disposed so that fluid in an exhaust stream of an exhaust stack exterior to the main hollow pipe is flowable into and through the plurality of port holes directly into the interior of the main hollow pipe, the main hollow pipe having two spaced apart closed off ends, the main hollow pipe positionable across the interior of the exhaust stack from which flows the exhaust stream,
vacuum apparatus,
a sample collecting tube connected to the main hollow pipe and having a first end in fluid communication with the interior of the main hollow pipe and a second end in fluid communication with the vacuum apparatus, the vacuum apparatus for drawing a portion of the exhaust stream through each port hole directly into the interior of the main hollow pipe and into and through the sample collecting tube, portions of the

exhaust stream thus drawn forming a composite sample of the exhaust stream for transmission therefrom to additional apparatus, and
wherein the main hollow pipe has one closed off end extending through the stack and movably mounted in a mount member outside the stack and wherein the mount member is a hollow nozzle and the one closed off end of the main hollow pipe has a plurality of vanes projecting therefrom which are received in and movably held in the hollow nozzle.

5,703,300
CONTAINER INSPECTION APPARATUS
Peter Gysi, Bellikon, Switzerland, assignor to Elpatronic AG, Zug, Switzerland
Filed May 9, 1996, Ser. No. 643,415
Claims priority, application Switzerland, Jun. 8, 1995, 01-679/95-0
Int. Cl.⁶ G01N *1/14*
U.S. Cl. 73—863.91 **17 Claims**

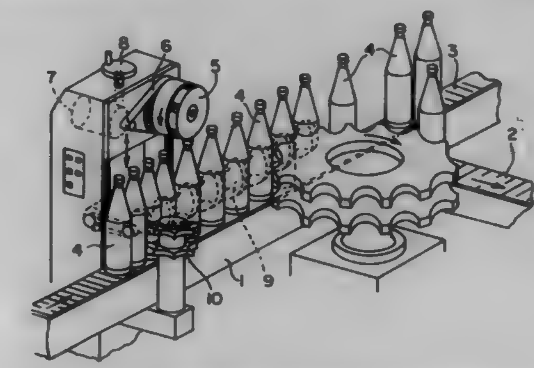

1. Apparatus for inspecting containers for the presence of contamination, comprising:
a conveyor device for transporting containers along a conveyor path, a portion of the conveyor path being a linear conveyor path for transporting the containers to an inspection zone; and
at least one disk-shaped sampling head positioned at the inspection zone for removing a sample from each individual container as each container is transported along the linear conveyor path, the sampling head being parallel with the conveyor path and supported for rotation about an axis transverse to the conveyor path and having a plurality of projecting elements arranged around a circumference of the sampling head so that a projecting element is inserted into each container as the sampling head rotates and the container is transported through the inspection zone.

5,703,301
UNIT DOSE BULK MATERIAL SAMPLING APPARATUS WITH CONTROLLED PRESSURE APPLICATOR
Ivan Pinto, West Chester, Pa.; Gerardo Perez, Elkton, Md., and Clarence W. Bowersox, Jr., West Chester, Pa., assignors to Accutrol Company, Inc., West Chester, Pa.
Filed Oct. 8, 1996, Ser. No. 727,261
Int. Cl.⁶ G01N *1/00*
U.S. Cl. 73—864.63 **12 Claims**

1. A sampler apparatus for unit dose bulk material sampling, comprising:
an elongated housing having a length, an axis coextensive with said length, a first bore extending in the direction of said axis the length of said housing, a from end having a front opening aligned with said first bore, said front end and front opening lying in a plane substantially perpendicular to the axis, and a back end;
a moveable piston rod supported in said first bore, comprising a front surface in a plane perpendicular to the axis and a shaft

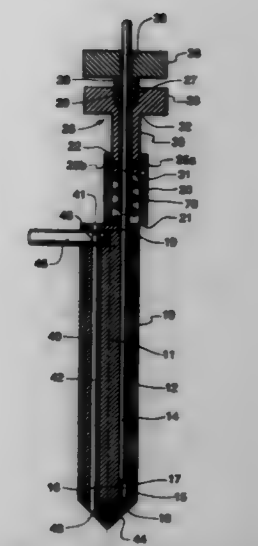

extending from said front surface in a direction opposite said front surface in the direction of said axis, the front surface having a diameter substantially equivalent to the diameter of the first bore;
a sampling cavity formed within the first bore and extending between the from surface of the piston rod and the front end of the housing, wherein the front opening of the front end of the housing forms an entrance to the sampling cavity;
adjusting means for selectively varying the position of the front surface of the piston in the first bore for adjusting, presetting, and locking the size of the sampling cavity;
a closure cap attached to said housing and having means for selectively controlling opening and closing said entrance to the sampling cavity; and
a cam follower connected to the piston rod, for moving said moveable piston rod a predetermined distance in the direction of said axis whereby the sampling cavity is reduced in size by a predetermined amount, said cam follower comprising:
a neck portion having at least one cam attached thereto; and
a compacting knob.

5,703,302
DEVICE FOR TESTING THE HOLDING FORCE OF FASTENER ELEMENTS SECURED IN A BASE MATERIAL
Roland Hasler, Vaduz, and Stefan Miescher, Eschen, both of Liechtenstein, assignors to Hilti Aktiengesellschaft, Schaan, Liechtenstein
Filed Feb. 4, 1997, Ser. No. 794,357
Claims priority, application Germany, Feb. 6, 1996, 196 04 158.9
Int. Cl.⁶ G01D *1/00*
U.S. Cl. 73—865.8 **11 Claims**

1. A device for testing the holding force of fastening elements having an axially extending bore therein and secured in a base material, comprises an axially extending load application member (1) having a first end and a second end spaced axially apart and an axially extending impact member (2), said impact member being axially displaceable relative to said load application member (1), said impact member (2) having a first end and a second end spaced axially apart and a central passageway arranged to receive and guide said load application member, said load application member (1) having an axially extending coupling region (3) extending from the first end thereof towards the second end thereto, said coupling region (3) being engageable in the bore of a fastening element to be tested, said load application member (1) having a stop surface (4) thereon spaced between said first and second ends thereof and facing towards said first end thereof, said impact member (2) having a first stop surface (6) facing away from the first end thereof and arranged to interact with said stop surface (4) on said

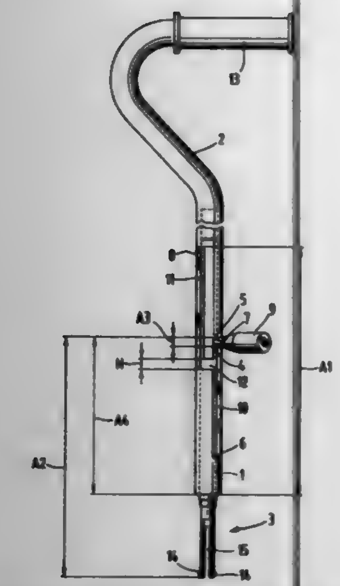

load application member, said coupling region (3) having a substantially cylindrical outside surface, said outside surface of the coupling region (3) having at least one projection (14) extending radially outwardly therefrom, and said projection (14) being elastically deflectable.

5,703,303

METHOD AND SYSTEM FOR WEAR TESTING A SEAT BY SIMULATING HUMAN SEATING ACTIVITY AND ROBOTIC HUMAN BODY SIMULATOR FOR USE THEREIN

Robert A. Stewart, South Lyon, Mich., assignor to Lear Corporation, Southfield, Mich.

Filed Dec. 19, 1996, Ser. No. 770,704

Int. Cl.[6] G01N *3/56*

U.S. Cl. 73—866.4 8 Claims

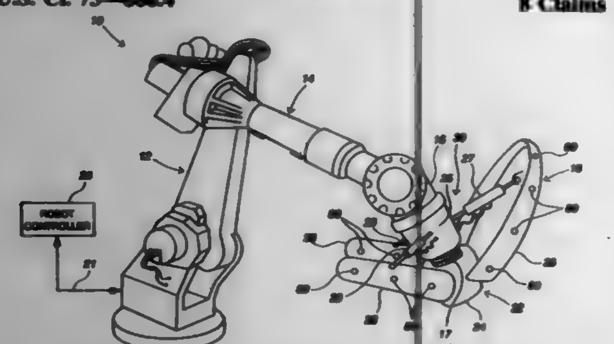

1. A system for wear testing a seat by simulating human seating activity, the system comprising:

a robot including an arm having a distal end and at least one arm drive for moving the arm;

a robotic human body simulator connected to the distal end of the arm for wear testing a seat bottom surface and a seat back surface of the seat under test, the simulator including:

thighs adapted to engage the seat bottom surface;

a trunk pivotally connected to the thighs and adapted to engage the seat bottom surface and the seat back surface; and

a plurality of simulator drives for moving the trunk and thighs relative to and independent of one another; and

a controller coupled to the at least one arm drive and the plurality of simulator drives and programmed with a control program to generate drive control signals so that the at least one arm drive and the plurality of simulator drives independently move the arm and the thighs and trunk of the simulator, respectively, repeatedly between a withdrawn position and a seat surface engaging position to test wear characteristics of the seat bottom surface and the seat back surface for a plurality of cycles.

5,703,304

IRON-BASED POWDER CONTAINING CHROMIUM, MOLYBDENUM AND MANGANESE

Caroline Lindberg, Höganäs, and Per Engdahl, Nyhamnsläge, both of Sweden, assignors to Höganäs AB, Sweden

PCT No. PCT/SE95/00917, § 371 Date Feb. 6, 1997, § 102(e) Date Feb. 6, 1997, PCT Pub. No. WO96/05007, PCT Pub. Date Feb. 22, 1996

PCT Filed Aug. 10, 1995, Ser. No. 776,821

Claims priority, application Sweden, Aug. 10, 1994, 9402672

Int. Cl.[6] B22F *3/12*; C22C *1/24*; *1/25*

U.S. Cl. 75—243 20 Claims

1. An iron-based powder for producing components by powder compacting and sintering essentially consisting of

0.7–2.0% by weight of Mo

0.2–2.5% by weight of Cr

0–3.0% by weight of Cu

0,05–0.25% by weight of Mn

0.3–1.0% by weight of C,

the balance being Fe

and not more than 1% by weight of inevitable impurities, characterised in that Fe,Mo and Mn are present as a prealloyed, water atomised FeMoMn base powder, Cr is present as FeCr, Cu is present as a metal powder or is partially prealloyed to the base powder and C is present as graphite.

5,703,305

MUSIC BOX

Akihiko Isaka, Nagano, Japan, assignor to Sankyo Seiki Mfg. Co., Ltd., Nagano, Japan

Filed Mar. 11, 1996, Ser. No. 615,524

Claims priority, application Japan, Mar. 13, 1995, 7-052313

Int. Cl.[6] G10F *1/06*

U.S. Cl. 84—95.1 15 Claims

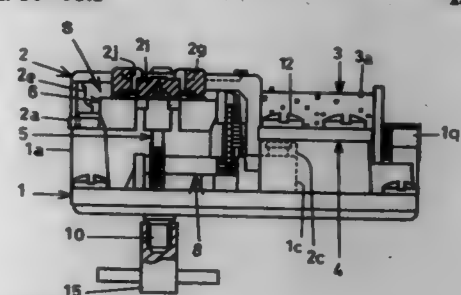

1. A music box comprising:

a drive shaft for winding a spring;

a drum which rotates with transmitted rotation of said drive shaft when a spring is released;

a vibrating plate with reeds for playing music when struck by pins on said drum;

speed governing means having a speed increasing gear train which transmits the rotation of said drive shaft and a worm shaft which is positioned in a final step of said speed increasing gear train and on which a rotor is fixed;

a frame for rotatably supporting said drive shaft and one end of said worm shaft, and on which said drum, said vibrating plate and said speed governing means are arranged;

a housing unit which rotatably supports said drive shaft and has a spring enclosure for enclosing the spring and a support unit which is formed at an end of said spring enclosure and supports the other end of said worm shaft;

said support unit comprising:

a bearing unit which rotatably supports the other end of said worm shaft at a center thereof;

an outer frame formed to enclose said bearing unit; and

a slit being formed between said bearing unit and said outer frame.

5,703,306

DEVICE HOLDER FOR DRUMS

Tsun-Chi Liao, Taichung, Taiwan, assignor to Hwa Shin Musical Instrument Co., Ltd., Taichung, Taiwan

Filed Jul. 8, 1996, Ser. No. 677,624

Int. Cl.[6] G10D *13/02*

U.S. Cl. 84—421 3 Claims

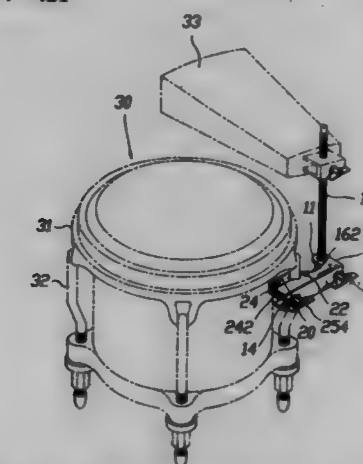

1. A device holder adapted for fastening to a tie rod between two counterloops of a drum to hold a rod member and an instrument on the rod member, the device holder comprising:

a base frame shaped as a U-channel, said base frame comprising a bottom wall, two parallel upright side walls raised from said bottom wall at two opposite sides, two upright lugs respectively raised from said upright side walls at one end and defining a respective through hole, a longitudinal open-ended slot disposed in said bottom wall at an opposite end remote from said upright lugs, two arched notches respectively disposed at said upright side walls, two pivot holes respectively formed in said upright side walls and disposed between said upright lugs and said arched notches, and a bolt hole formed in said bottom wall between said upright lugs;

a holding down device mounted in the bolt hole of said base frame and adapted for securing a rod member in the through holes of said upright lugs to hold an instrument;

a curved retaining block having a fixed end pivotably connected between the pivot holes of said base frame by a pivot, an open-ended free end, and an arched bottom notch adapted for acting with the arched notches of said base frame to secure said base frame to one tie rod of the drum; and

a fastening device pivoted to the open-ended free end of said curved retaining block and adapted for securing the open-ended free end to the bottom wall of said base frame for permitting the arched bottom notch of said curved retaining block and the arched notches of said base frame to be clamped on the tie rod of the drum.

5,703,307

TONE GENERATING APPARATUS WITH FM SOUND SOURCE AND PCM SOUND SOURCE

Akira Ikeya, Hamamatsu, Japan, assignor to Yamaha Corporation, Japan

Filed Nov. 27, 1995, Ser. No. 563,182

Claims priority, application Japan, Nov. 29, 1994, 6-294782

Int. Cl.[6] G10H *7/00*

U.S. Cl. 84—603 8 Claims

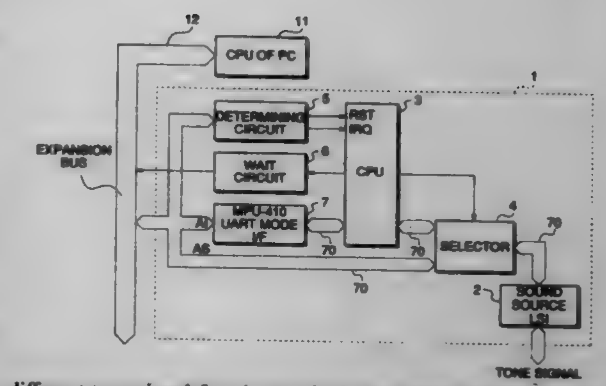

1. A tone generating apparatus for connection to a control device that outputs selecting data for selecting one of a plurality of different tone signal-forming methods and control data for controlling of the selected tone signal-forming method, comprising:

a tone signal-generating block having a plurality of tone signal-forming circuits that respectively form tone signals in accordance with said plurality of different tone signal-forming methods based on said control data;

a determining block that detects said selecting data delivered from said control device and determines to which of said plurality of tone signal-forming circuits said control data delivered from said control device is to be supplied, depending upon a result of said detection; and

a control data supply block that supplies said control data to a corresponding one of said plurality of tone signal-forming circuits of said tone signal-generating block, depending upon a result of said determination by said determining block.

5,703,308

KARAOKE APPARATUS RESPONSIVE TO ORAL REQUEST OF ENTRY SONGS

Masashi Tashiro, and Hirokazu Kato, both of Hamamatsu, Japan, assignors to Yamaha Corporation, Hamamatsu, Japan

Filed Oct. 31, 1995, Ser. No. 550,826

Claims priority, application Japan, Oct. 31, 1994, 6-267259

Int. Cl.[6] G10H *3/00*

U.S. Cl. 84—609 20 Claims

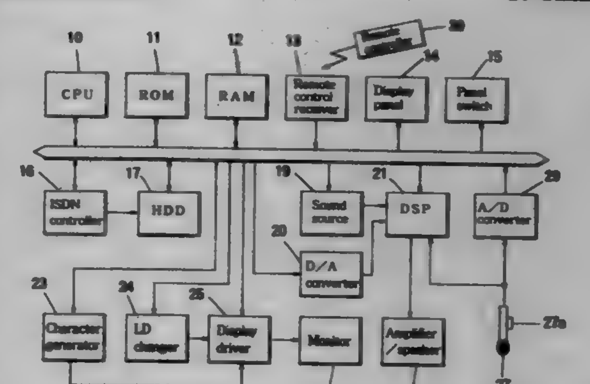

1. A karaoke apparatus responsive to a request message for performing an entry song, comprising:

a music data storage device that stores music data representative of a plurality of entry songs;

a reference data storage device that stores reference data representative of a multiple of key items which specify the entry songs;

a collecting device that includes a microphone for collecting an oral request message and for converting the same into a corresponding voice signal;

an extraction device that analyzes the voice signal to extract therefrom key information including key terms which suggest a desired entry song;

a search device that searches the reference data storage device to identify the desired entry song by detecting coincidence

between successive key terms of the key information and at least one of the key items to determine a level of coincidence between each of the key terms and a corresponding key item such that a field of possible corresponding entry songs is narrowed until the desired entry song is identified, and wherein the level of coincidence indicates a degree of matching between each of the key terms and the corresponding key item; and

a performance device that retrieves music data of the desired entry song from the music data storage device to perform the desired entry song according to the retrieved music data.

5,703,309

MUSICAL INSTRUMENT SYSTEM WITH NOTE ANTICIPATION

Bernard Mohrbacher, Naples, Fla., assignor to Franklin N. Eventoff, Ferndale, Wash.

Filed Feb. 6, 1996, Ser. No. 595,903

Int. Cl.^{6} G10H *1/26;7/00*

U.S. Cl. 84—609 **22 Claims**

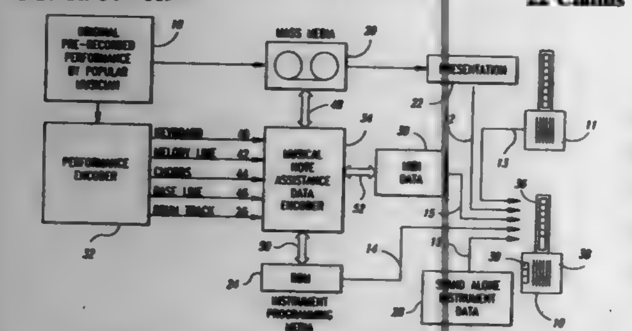

1. A system for producing a performance of a pre-recorded musical piece having a series of musical tones modified by a player of the system to produce an individualized musical performance, the system comprising:

a source of musical performance information for reproducing the pre-recorded musical piece, said musical performance information being supplied in a predetermined format including music data indicative of a musical tone required to produce a portion of the pre-recorded musical piece, timing data indicative of a transition time at which said musical tone should be performed to produce said portion of the pre-recorded musical piece, and duration data indicative of a time duration for which said musical tone should be performed to produce said portion of the pre-recorded musical piece;

a data storage area to store data related to the series of musical tones of the pre-recorded musical piece, said stored data being stored in a predetermined format including music data related to said musical tone required to produce said portion of the pre-recorded musical piece, and anticipation timing data indicative of a time at which said music data should be made available to the player;

a plurality of player operable input members, each producing an output signal in response to actuation of each of said input members by the player;

a mapping circuit coupled to said storage area and to said input members to map said stored data to each of said plurality of input members in accordance with said anticipation timing data and at a time preceding said transition time wherein said stored data for each of said plurality of input members is altered at said anticipation time and in advance of the production of said musical tone to produce said portion of the pre-recorded musical piece; and

a music production device, responsive to said mapped data and said actuation of said input members by the player to produce the individualized musical performance by generating a musical sound in response to actuation of one of said input members by the player.

5,703,310

AUTOMATIC PERFORMANCE DATA PROCESSING SYSTEM WITH JUDGING CPU OPERATION-CAPACITY

Yasushi Kurakake, and Shigehiko Mizuno, both of Hamamatsu, Japan, assignors to Yamaha Corporation, Japan

Filed Sep. 25, 1996, Ser. No. 719,509

Claims priority, application Japan, Sep. 29, 1995, 7-253682

Int. Cl.^{6} G10H *7/00;* **G04B** *13/00;* **A61H** *5/00*

U.S. Cl. 84—609 **27 Claims**

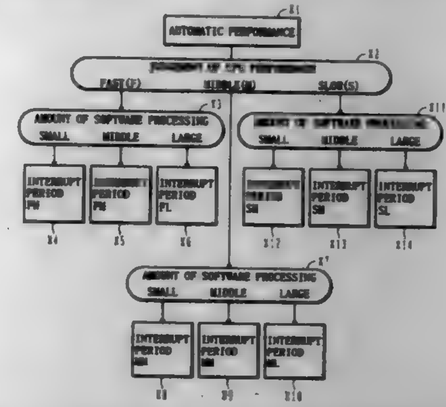

1. An automatic performance data processing system for reading automatic performance data from storage means at a predetermined period and supplying the automatic performance data to a musical sound generating system, the automatic performance data including event data representative of the contents of each performance event and time data representative of a time when the performance event occurs, the automatic performance data processing system comprising:

a CPU for processing the automatic performance data;

means for judging operation-capacity of said CPU; and

means for determining an execution period of processing the automatic performance data in accordance with the judged CPU operation-capacity.

5,703,311

ELECTRONIC MUSICAL APPARATUS FOR SYNTHESIZING VOCAL SOUNDS USING FORMAT SOUND SYNTHESIS TECHNIQUES

Shinichi Ohta, Hamamatsu, Japan, assignor to Yamaha Corporation, Japan

Filed Jul. 29, 1996, Ser. No. 687,976

Claims priority, application Japan, Aug. 3, 1995, 7-216494; Aug. 21, 1995, 7-234731

Int. Cl.^{6} G10H *1/06;7/00*

U.S. Cl. 84—622 **17 Claims**

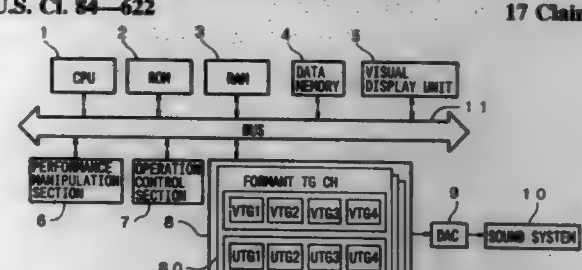

1. An electronic musical apparatus comprising:

storage means for storing formant data and performance data, the performance data including lyric data corresponding to words of a lyric of a song to be sung and melody data corresponding to a melody of the song, the lyric data including breath data, the melody data including sounding duration data;

voice synthesis means for synthesizing voices corresponding to the words of the lyric, based on the formant data and the

performance data which designate sounds to be generated in accordance with the melody of the song; and

control means for controlling the voice synthesis means such that the sounds are generated in accordance with the performance data, the control means accessing the storage means to sequentially read out the performance data in accordance with the melody to supply the voice synthesizing means with the corresponding formant data, wherein the control means controls a sounding duration of the sounds in accordance with at least one of the breath data and the sounding duration data.

5,703,312

ELECTRONIC MUSICAL INSTRUMENT AND SIGNAL PROCESSOR HAVING A TONAL EFFECT IMPARTING FUNCTION

Makoto Takahashi, and Kiyoshi Hasebe, both of Hamamatsu, Japan, assignors to Yamaha Corporation, Hamamatsu, Japan

Filed Sep. 12, 1995, Ser. No. 527,147

Claims priority, application Japan, Sep. 13, 1994, 6-244832; Jul. 26, 1995, 7-210996

Int. Cl.^{6} G10H *1/00;1/02*

U.S. Cl. 84—626 **8 Claims**

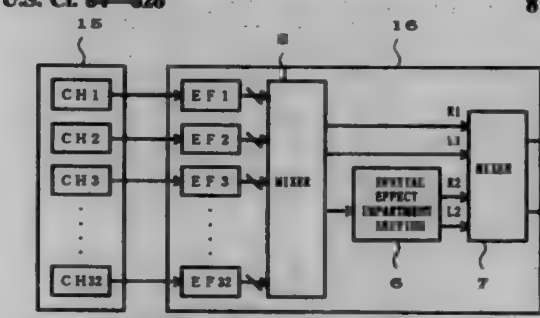

1. An effect imparting apparatus comprising:

effect impartment means including storage means having at least two storage areas for a single channel to be used for delaying tone sample data, said effect impartment means performing a delaying process to sequentially delay plural sample data of a tone by use of one of said at least two storage areas, to impart a predetermined effect to the tone in the single channel on the basis of said delaying process;

input means for inputting into said effect impartment means tone sample data to which an effect is to be imparted;

supply means for supplying control information indicating that tone generation for first tone sample data previously inputted to said effect impartment means via said input means should be damped in the single channel to allow second tone sample data to be next inputted to said effect impartment means in place of said first tone sample data; and

control means responsive to said control information for inhibiting use of the one of said at least two storage areas which has been used for the delaying process of said first tone sample data in the single channel, to allow another of said at least two storage areas to be used for the delaying process of said second tone sample data in the single channel.

5,703,313

PASSIVE NONLINEAR FILTER FOR DIGITAL MUSICAL SOUND SYNTHESIZER AND METHOD

John R. Pierce, Palo Alto, and Scott A. Van Duyne, Stanford, both of Calif., assignors to The Board of Trustees of the Leland Stanford Junior University, Palo Alto, Calif.

Filed May 10, 1994, Ser. No. 241,327

Int. Cl.^{6} G10H *1/02;1/12*

U.S. Cl. 84—622 **5 Claims**

1. A signal synthesizer, comprising:

a resonant network in which traveling wave signals propagate; and

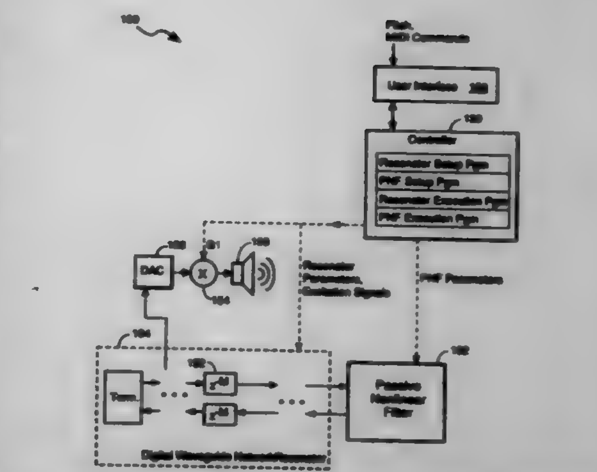

a passive nonlinear filter coupled to said resonant network for receiving said traveling wave signals propagating in said resonant network, for passively modifying said received signals so as to generate modified traveling wave signals having a different frequency spectrum than said received traveling wave signals without changing said received traveling wave signals' energy content, and for transmitting said modified traveling wave signals into said resonant network;

said passive nonlinear filter including a first memory element for retaining an internal energy state and a dual-mode signal generator that generates said modified traveling wave signal from said received signals and said internal energy state using a first signal processing method when said internal energy state has a negative value and using a second distinct signal processing method when said internal energy state has a positive value.

5,703,314

INFRARED PROJECTOR COUNTERMEASURE SYSTEM

Delbert Brent Meeker, Camarillo, Calif., assignor to The United States of America as represented by the Secretary of the Navy, Washington, D.C.

Filed Nov. 20, 1996, Ser. No. 752,779

Int. Cl.^{6} G01J *1/00*

U.S. Cl. 89—1.11 **11 Claims**

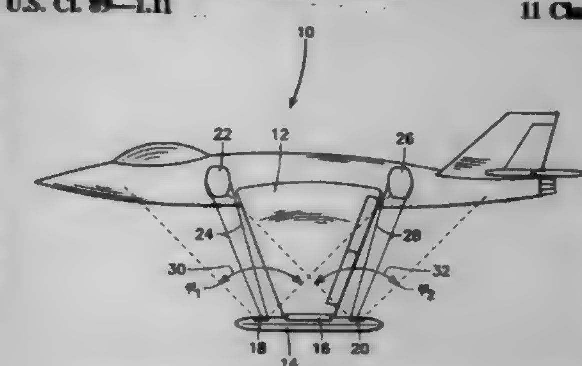

7. A countermeasure system adapted for use on board an aircraft to confuse an infrared seeker of an incoming missile as to a flight path for said aircraft, said countermeasure system being mounted in a wing tip pod of said aircraft, said countermeasure system comprising:

a first laser for projecting a first collimated beam of infrared energy along a first optical path, said first collimated beam of infrared energy having a first frequency;

a second laser for projecting a second collimated beam of infrared energy along said first optical path, said second collimated beam of infrared energy having a second frequency;

a beam combiner spatially disposed from said first laser and said second laser to receive said first collimated beam of infrared

energy and said second collimated beam of infrared energy, said beam combiner combining said first and said second collimated beams of infrared energy to form a third collimated beam of infrared energy having said first and said second frequencies, said beam combiner projecting said third collimated beam of infrared energy along said first optical path;

a beam former spatially disposed from said beam combiner on said first optical path, said beam former spreading said third collimated beam of infrared energy to a predetermined angle to provide a substantially circular shaped beam of infrared energy having said first and said second frequencies, said beam former projecting said substantially circular shaped beam of infrared energy along a second optical path; and

a scanner spatially disposed from said beam former on said second optical path to receive said substantially circular shaped beam of infrared energy, said scanner projecting said substantially circular shaped beam of infrared energy in a lateral sweeping motion across a fuselage of said aircraft.

5,703,315
DEVICE AND METHOD FOR TRANSVERSELY CUTTING A BAND
David A. Coggan, Arlington, Tex., assignor to Loral Vought Systems Corporation, Grand Prairie, Tex.
Filed Apr. 25, 1996, Ser. No. 637,481
Int. Cl.^{6} B64D *1/00*
U.S. Cl. 89—1.14 **23 Claims**

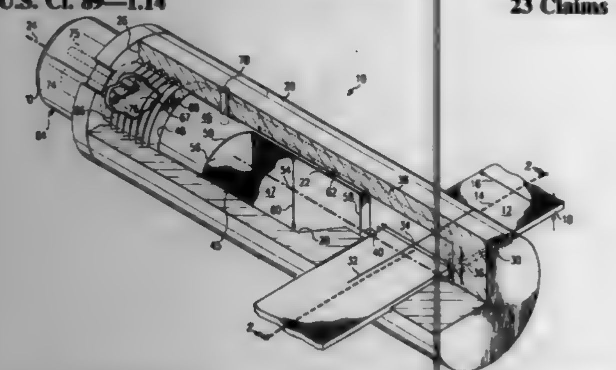

1. A band cutter for cutting a band having a longitudinal axis and major and minor transverse dimensions, each of said transverse dimensions being perpendicular to said longitudinal axis, the major transverse dimension being greater than the minor transverse dimension, the band cutter comprising:

a housing;

said housing having a barrel chamber formed therein, said barrel chamber having a longitudinal axis along which said barrel chamber extends from a first end of said barrel chamber to a second end of said barrel chamber;

said housing having a band slot formed therein, said band slot having a longitudinal axis along which said band slot extends through said housing from a first end of said band slot to a second end of said band slot, said band slot having a major transverse dimension and a minor transverse dimension with each of the major and minor transverse dimensions of said band slot being perpendicular to each other and to the longitudinal axis of said band slot, with the major transverse dimension of said band slot being greater than the minor transverse dimension of said band slot, said band slot being adapted to receive therein a portion of the band to be cut so that the major transverse dimension of the band is parallel to the major transverse dimension of said band slot and the minor transverse dimension of the band is parallel to the minor transverse dimension of said band slot, said portion of the band to be cut extending through said band slot from said first end of said band slot to said second end of said band slot, said band slot having walls which restrict lateral and rotational movement of said portion of the band to be cut during cutting of the band;

a cutting blade positioned within said barrel chamber, said cutting blade having major and minor transverse dimensions, the major transverse dimension of said cutting blade being greater than the minor transverse dimension of said cutting blade, the minor transverse dimension of said cutting blade being generally parallel to the longitudinal axis of said band slot, and the major transverse dimension of said cutting blade being generally perpendicular to the longitudinal axis of said band slot and generally parallel to the minor transverse dimension of said band slot;

an energy source positioned within said barrel chamber, said energy source being adapted for effecting movement of said cutting blade along the longitudinal axis of said barrel chamber toward said band slot;

whereby, upon movement of the cutting blade through said barrel chamber, said cutting blade impacts said portion of the band positioned within said band slot such that the cutting blade cuts through said band to thereby sever said band while said walls of the band slot restrict substantially any lateral and rotational movement of said portion of the band.

5,703,316
TRUNK LID, BULLET RESISTANT APPARATUS
James R. Madden, Jr., 4410 W. Acoma Dr., Glendale, Ariz. 85306-4506
Filed Jan. 21, 1997, Ser. No. 786,223
Int. Cl.^{6} F41H *5/06*
U.S. Cl. 89—36.08 **15 Claims**

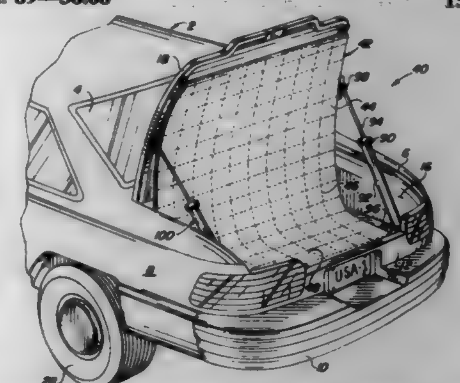

1. Bullet resistant apparatus for a vehicle having a trunk opening, a lid pivotally secured to the vehicle and covering the trunk opening, and a trunk floor, comprising in combination:

bullet resistant means secured to the trunk lid and hanging downwardly therefrom when the trunk lid is open and including a lower portion disposed on the trunk floor for protecting the rear of the vehicle from ballistic elements fired from rearwardly of the vehicle; and

means for opening the trunk to deploy the bullet resistant means.

5,703,317
PORTABLE EQUIPMENT FOR IMMOBILIZING PERSONAL FIREARMS
Philippe Levilly, Impasse Cesar-Franck, F-14740 Bretteville-L'Orgueilleuse, and Yves A. Leloup, 40, rue du Mont-Valerien, F-92210 Saint Cloud, both of France
PCT No. PCT/FR95/00788, § 371 Date Jun. 3, 1996, § 102(e) Date Jun. 3, 1996, PCT Pub. No. WO95/35476, PCT Pub. Date Dec. 28, 1995
PCT Filed Jun. 15, 1995, Ser. No. 602,757
Claims priority, application France, Jun. 17, 1994, 94 07456
Int. Cl.^{6} F41A *23/00;9/62;* **G01L** *5/14;* **E04G** *3/00*
U.S. Cl. 89—37.03 **8 Claims**

1. An apparatus for immobilizing and holding a personal firearm during test firing, said apparatus comprising:

a base plate adapted to be secured to a support;

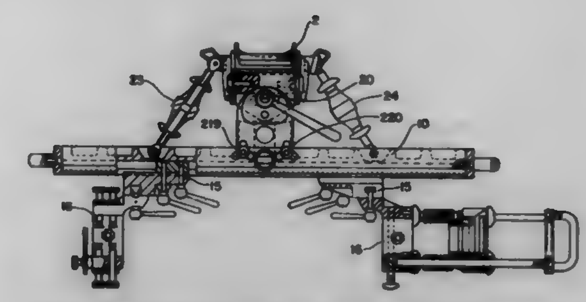

a connecting element pivotably connected to said base plate for rotation around a first axis;

an intermediate component pivotably connected to said connecting element for rotation around a second axis, said second axis perpendicular to said first axis, said intermediate component having a bearing surface;

an elongated rail pivotably secured to said intermediate component for rotation around a third axis, said rail including a cavity, said third axis perpendicular to both said first and second axes;

a plurality of gun locks slidably mounted on said rail for sliding longitudinally along said elongated rail, each said gun locks including a slide arranged perpendicular to the longitudinal axis of said rail, said slides each including a U-shaped holder, said U-shaped holders adapted to receive a firearm;

a first clamping member for securing said connecting element against rotation around said first axis and said intermediate component against rotation around said second axis;

a tilting member for pivotably securing said rail to said intermediate component, said tilting member comprising a head received in said rail cavity for enabling said rail to pivot relative to said head, a slide secured to said head and slidably received in said intermediate component, and a second clamping member operatively connected to said slide and said intermediate component for urging said rail against said bearing surface and for thereby securing said rail against rotation around said third axis; and

first and second locking means for respectively locking said intermediate component and said rail to said base plate.

5,703,318
ARTILLERY GUN MOUNT
Anthony R. Franchino, Whitehouse Station, N.J., and Steven McDonald, Reeders, Pa., assignors to The United States of America as represented by the Secretary of the Army, Washington, D.C.
Continuation-in-part of Ser. No. 714,717, Sep. 16, 1996, abandoned. This application Feb. 4, 1997, Ser. No. 794,792
Int. Cl.^{6} F41A *13/04;25/02;27/14;5/16*
U.S. Cl. 89—37.07 **13 Claims**

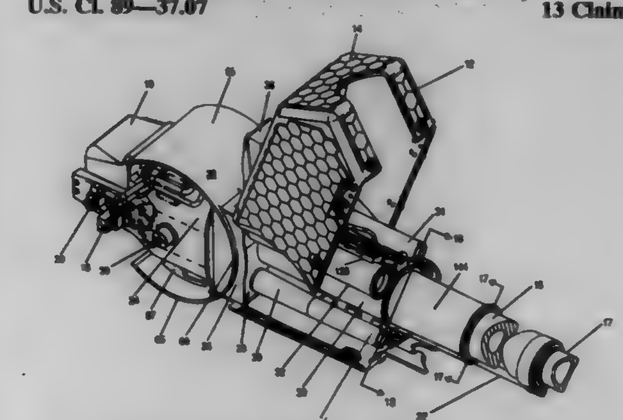

1. A gun mount system for firing long range projectiles from a gun tube under rapid fire conditions which comprises:

cradle casting means for supporting and elevating said gun tube during aiming and recoil positions;

gusseted tube assembly means for operatively supporting said gun tube, and for enabling replacement of said gun tube under field conditions;

breech block means into which is placed said gun tube during recoil and counter-recoil positions;

recoil means in said gun mount system to further assist said gun mount system to withstand rapid fire conditions;

recuperator means for controlling position of said breech block means after recoil;

coolant means for providing an integral liquid coolant to said recoil means and said gun tube;

rotor shield means for protecting said gun mount system;

ballistic shield cover means for further providing protection for said gun mount system; and

dust shield means for preventing particulate contamination of said gun tube.

5,703,319
CONNECTOR BLOCK FOR BLAST INITIATION SYSTEMS
James E. Fritz, Ellington; Thomas C. Tseka, West Suffield, and Daniel P. Sutula, Jr., Farmington, all of Conn., assignors to The Ensign-Bickford Company, Simsbury, Conn.
Filed Oct. 27, 1995, Ser. No. 549,160
Int. Cl.^{6} C06C *5/06;7/00*
U.S. Cl. 102—275.7 **23 Claims**

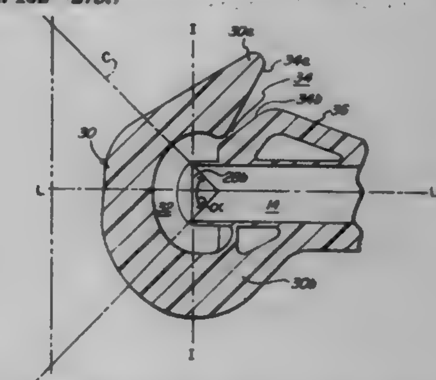

1. In a connector block for retaining one or more signal transmission lines in signal transfer relationship with a detonator, the connector block comprising:

a body member having a signal transmission end and a detonator channel having a longitudinal axis and terminating in a discharge end, the channel extending within the body member for receiving and retaining therein a detonator having an output end, with the output end disposed at the discharge end of the channel when the detonator is seated therein, the projection of the periphery of the output end of such seated detonator on a plane passed through the discharge end of the channel perpendicularly to the longitudinal axis thereof serving as the origin of a hypothetical blast cone emanating from the discharge end of the channel and having a given apex angle;

a line-retaining, curved clip member disposed at the signal transmission end of the body member and cooperating therewith to define therebetween a line-retaining slot extending transversely of the longitudinal axis of the channel for receiving and retaining therein at least one signal transmission line in signal communication relationship with such output end of a detonator retained within the receiving channel, the clip member having a proximal end carried on the body member and an opposite, distal end and the line-retaining slot having a closed end adjacent the proximal end of the clip member and an open end adjacent the distal end of the clip member;

an entryway formed between the distal end of the clip member and the body member, the entryway being dimensioned and configured to admit sideways insertion of such transmission

line therethrough and into the line-retaining slot by displacement of the clip member, thereby imposing a reaction load on the clip member:

the improvement comprising that the clip member is dimensioned and configured to be of continuously decreasing thickness as sensed moving longitudinally along the clip member from the proximal end thereof to at least about the first-encountered intersection of the clip member with a blast cone having a ninety degree apex angle.

5,703,320

CONNECTOR FOR BLAST INITIATION SYSTEM

Frank J. Lucca, Granby; Daniel P. Sutula, Jr., Farmington; Ronald M. Dufrane, North Granby, and Ernest L. Gladden, Granby, all of Conn., assignors to The Ensign Bickford Company, Simsbury, Conn.

Filed Jan. 18, 1996, Ser. No. 576,003

Int. Cl.[6] C06C *5/04*

U.S. Cl. 102—275.7 **25 Claims**

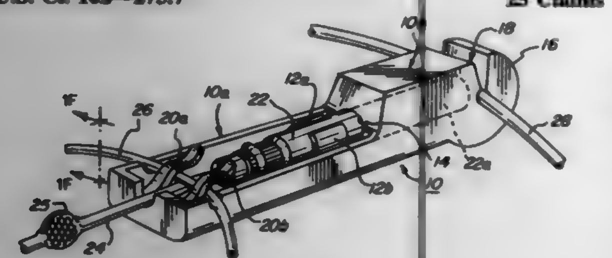

1. A connector device for operatively coupling a brisant donor line in signal transfer relation with an acceptor line, the device comprising:

an anvil member for supporting a portion of such acceptor line; and

donor line retaining means for retaining such donor line in signal transfer relation with such portion of such acceptor line as is supported by the anvil member, the anvil member and the donor line retaining means facing each other and being respectively dimensioned and configured to retain the donor line and the acceptor line in conforming contact with each other.

5,703,321

DEVICE FOR LOCATING ARTILLERY AND SNIPER POSITIONS

Johannes Feierlein, Oberpframmern, and Ulrich Rieger, Feldkirchen-Westerham, both of Germany, assignors to Daimler-Benz Aerospace AG, München, Germany

Filed Oct. 23, 1995, Ser. No. 546,809

Claims priority, application Germany, Nov. 8, 1994, 44 39 850.6

Int. Cl.[6] F41B *33/04*

U.S. Cl. 102—427 **9 Claims**

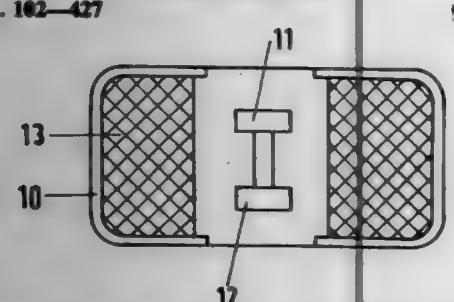

1. A device for locating artillery and sniper positions during the firing of a shot, comprising: acoustic sensor triggering means including an igniter with an acoustic sensor, said acoustic sensor being adjustable in terms of at least one of frequency and pulse pattern; a shell-proof housing, said acoustic sensor triggering means being disposed in said housing; removal preventer means connected to said acoustic sensor triggering means; and optical signalling means in functional connection with said triggering means and said removal preventer and deposited within said housing, said optical signalling means being released upon ignition by said igniter.

5,703,322

CARTRIDGE HAVING HIGH PRESSURE LIGHT GAS

Derek A. Tidman, McLean, Va., assignor to General Dynamics Land Systems Inc., Sterling Heights, Mich.

Filed Feb. 2, 1995, Ser. No. 382,704

Int. Cl.[6] F42B *5/02*

U.S. Cl. 102—440 **41 Claims**

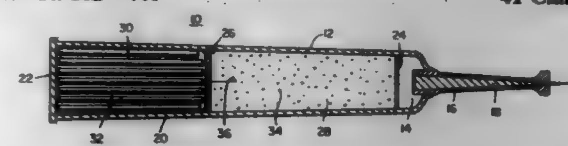

1. A cartridge comprising a housing carrying a projectile, the housing including:

a sealed container structure including: a mixture comprising an oxidizer gas and helium gas at a pressure of at least several hundred atmospheres, a fuel having molecules including hydrogen atoms, a solid propellant, a front wall structure confining a mass in the sealed container structure from the projectile; the propellant, fuel, oxidizer gas, helium gas, sealed container structure and front wall structure being positioned, arranged and including materials so that in response to ignition within the sealed container structure, the propellant, fuel, helium gas and oxygen from the oxidizer gas are further pressurized and mixed to increase the pressure on the front wall structure to a sufficiently high value to burst the front wall structure so a gas mixture including the fuel, helium gas and oxygen having a pressure substantially higher than the pressure of the mixture in the sealed container structure is applied to the projectile to accelerate the projectile in a barrel in which the projectile is located.

5,703,323

PYRIDINE AND PYRIDONE STABILIZERS FOR HYDROXYLAMMONIUM NITRATE AND HYDROXYLAMINE-CONTAINING COMPOSITIONS

Eugene F. Rothgery, North Branford, and Carl G. Seefried, Jr., Southbury, both of Conn., assignors to Olin Corporation, Cheshire, Conn.

Filed Sep. 17, 1996, Ser. No. 713,686

Int. Cl.[6] C01B *21/20;* **C06B** *25/00;25/34;31/00*

U.S. Cl. 149—88 **10 Claims**

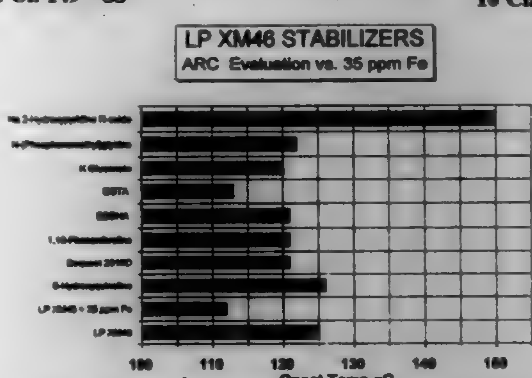

1. A stabilized hydroxylammonium nitrate or hydroxylamine-containing composition comprising said hydroxylammonium nitrate or hydroxylamine and a pyridine or pyridone salt, or an acid thereof, said pyridine or pyridone salt, or acid thereof, being present in said composition in an amount of between about 0.0001% and about 2%, based upon the weight of said composition, wherein said pyridine or pyridone salt is the sodium salt of 2-hydroxypyridine-N-oxide.

5. A stabilized hydroxylammonium nitrate or hydroxylamine-containing composition comprising said hydroxylammonium nitrate or hydroxylamine and a pyridine or pyridone salt, or an acid thereof, said pyridine or pyridone salt, or acid thereof, being present in said composition in an amount of between about 0.0001% and about 2%, based upon the weight of said composition, wherein said pyridine or pyridone salt is represented by the structural formula:

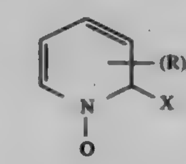

wherein X is a moiety selected from the group consisting of SH, OH and NH_2, n is an integer of 1 or 2, and R is hydrogen or a lower alkyl or lower alkoxy group having from one to six carbons.

6. A stabilized hydroxylammonium nitrate or hydroxylamine-containing composition comprising said hydroxylammonium nitrate or hydroxylamine and a pyridine or pyridone salt, or an acid thereof, said pyridine or pyridone salt, or acid thereof, being present in said composition in an amount of between about 0.0001% and about 2%, based upon the weight of said composition, wherein said pyridine or pyridone salt is represented by the structural formula:

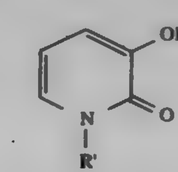

wherein R' is a moiety selected from the group consisting of hydrogen and a lower alkyl group having from one to six carbons.

7. A stabilized hydroxylammonium nitrate or hydroxylamine-containing composition comprising said hydroxylammonium nitrate or hydroxylamine and a pyridine or pyridone salt, or an acid thereof, said pyridine or pyridone salt, or acid thereof, being present in said composition in an amount of between about 0.0001% and about 2%, based upon the weight of said composition, wherein said pyridine or pyridone salt is represented by the structural formula:

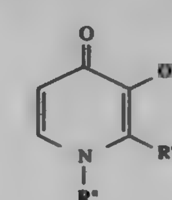

wherein R" is a moiety selected from the group consisting of hydrogen and a lower alkyl group having from one to six carbons, and R‴ is a lower alkyl or lower alkoxy group having from one to six carbons.

8. A stabilized hydroxylammonium nitrate or hydroxylamine-containing composition comprising said hydroxylammonium nitrate or hydroxylamine and a pyridine or pyridone salt, or an acid thereof, said pyridine or pyridone salt, or acid thereof, being present in said composition in an amount of between about 0.0001% and about 2%, based upon the weight of said composition, wherein said pyridine or pyridone salt is selected from the group consisting of: zinc pyrithione, copper pyrithione, manganese pyrithione, nickel pyrithione, cobalt pyrithione, bismuth pyrithione, zirconium pyrithione, 1-hydroxy-6-substituted pyridiones having a 6-ring substituent selected from the group consisting of —O—R and —S—R, wherein O is oxygen, S is sulfur, and R is a substituted or unsubstituted hydrocarbon radical having between 1 and 20 carbon atoms, and combinations thereof.

5,703,324

SHIELDED BANANA PLUG WITH DOUBLE SHROUD AND INPUT RECEPTACLE

Piet Harder, Borne, Netherlands, assignor to Fluke Corporation, Everett, Wash.

Filed Apr. 30, 1996, Ser. No. 640,387

Int. Cl.[6] H02G *15/02;15/24*

U.S. Cl. 174—21 C **7 Claims**

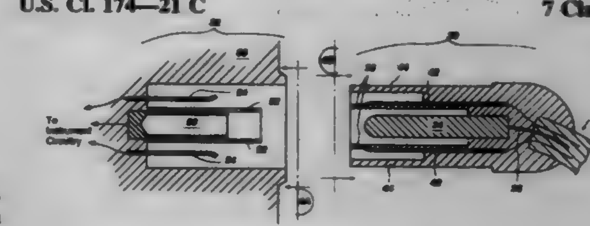

1. A connection system for an instrument and test leads comprising:

(a) a shielded banana plug having:
  (i) an inner conductor,
  (ii) a first shroud spaced apart from said inner conductor,
  (iii) a conductive shield surrounding said first shroud, and
  (iv) a second shroud spaced apart from said shield; and,
(b) an input receptacle having:
  i) an inner sleeve having an open end for receiving said inner conductor,
  (ii) a nonconductive shroud substantially surrounding said inner sleeve, and
  (iii) a conductive shroud spaced apart from and substantially surrounding said nonconductive shroud for engaging said conductive shield when said plug is inserted into said receptacle.

5,703,325

WATERPROOF CASING

Tohru Yamaguchi, and Hiroaki Kamo, both of Shizuoka, Japan, assignors to Yazaki Corporation, Tokyo, Japan

Filed Feb. 15, 1996, Ser. No. 602,030

Claims priority, application Japan, Feb. 16, 1995, 7-028268; Feb. 9, 1996, 8-024061

Int. Cl.[6] H02G *3/08*

U.S. Cl. 174—50 **8 Claims**

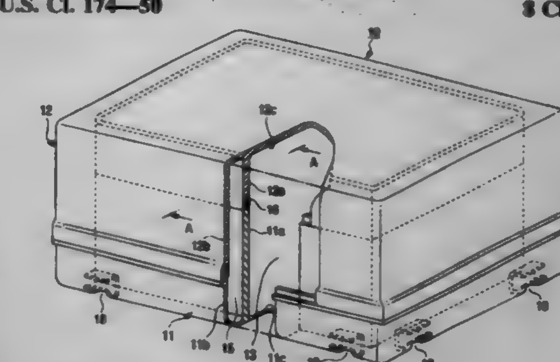

1. A waterproof casing comprising:

a casing body having a substantial box-shape; and

a lid for openably closing an open portion of said casing body, said casing body and said lid jointly defining a receiving space for containing electrical parts,

wherein said casing body and said lid include respective first peripheral walls which are butted against each other to thereby prevent an intrusion of water into the receiving space, and also include respective second peripheral walls which are spaced outwardly from said first peripheral walls to form a

space around said first peripheral walls, and are butted against each other, so that each of a joint portion between said first peripheral walls and a joint portion between said second peripheral walls forms a waterproof structure which limits an intrusion of water.

5,703,326
CONNECTION OF ELECTRICAL LEADS IN ELECTROLUMINESCENT LIGHT BY MEANS OF PARALLEL CONNECTION TO A PLURALITY OF CONDUCTORS

Hiromu Yamada, and Seiji Okabe, both of Shiga, Japan, assignors to NEC Corporation, Tokyo, Japan

Filed Jun. 24, 1996, Ser. No. 665,698

Claims priority, application Japan, Jun. 23, 1995, 7-157623

Int. Cl.⁶ H01J *5/46*

U.S. Cl. 174—50.52 **10 Claims**

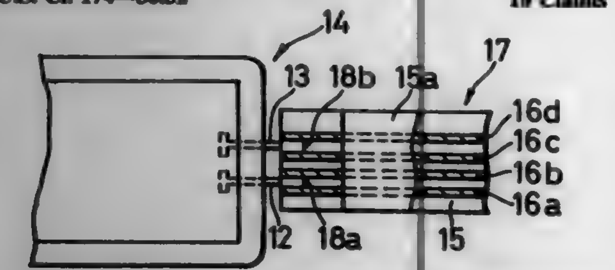

1. An electrical connection of electrode leads externally extending from an electroluminescent light to conductors of a flat flexible lead, said conductors making no contact with each other, characterized in that each of said electrode leads is bonded to a plurality of said conductors of said flat flexible lead in electrical communication.

5,703,327
ELECTRICAL BOXES

Robert W. Jorgensen, Niles, Mich., assignor to Hubbell Incorporated, Orange, Conn.

Continuation-in-part of Ser. No. 168,377, Dec. 17, 1993, Pat. No. 5,619,013. This application Mar. 31, 1995, Ser. No. 414,493

Int. Cl.⁶ H02G *3/08*

U.S. Cl. 174—53 **21 Claims**

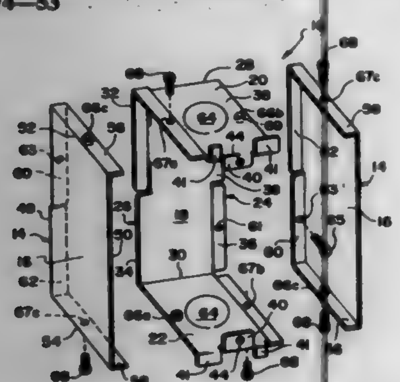

1. An electrical box assembly, comprising:
a metallic U-shaped member including a substantially rectangular rear panel with first and second end edges and first and second side edges, a first substantially rectangular end panel having first and second end edges and first and second side edges with said first end edge of said first end panel being rigidly coupled to said first end edge of said rear panel and extending substantially perpendicular to said rear panel, and a second substantially rectangular end panel having first and second end edges and first and second side edges with said first end edge of said second end panel rigidly coupled to said second end edge of said rear panel and extending substantially perpendicular to said rear panel;
a first metallic sidewall including a first side panel with first and second end edges and first and second side edges, and being rigidly coupled to said U-shaped member, each of said first and second end edges of said first side panel having a substantially planar first end coupling flange extending substantially perpendicular to said first side panel from a first end fold line and a second end fold line, respectively, for overlapping a substantially planar portion of one of said end panels to attach said first sidewall to said U-shaped member; and
a second metallic sidewall including a second side panel with first and second end edges and first and second side edges, and being rigidly coupled to said U-shaped member, each of said first and second end edges of said second side panel having a second end coupling flange extending substantially perpendicular to said second side panel for overlapping a portion of one of said end panels of said U-shaped member to attach said second sidewall to said U-shaped member,
one of said side edges of said first sidewall having a first side coupling flange extending substantially perpendicular to said first side panel for overlapping a portion of said first side edge of said rear panel, and
one of said side edges of said second sidewall having a second side coupling flange extending substantially perpendicular to said second side panel for overlapping a portion of said second side edge of said rear panel.

5,703,328
CABLE LEAD-IN

Olaf Johannsen, Sundgade 22, Sonderborg, Denmark, DK-6400

PCT No. PCT/DK94/00036, § 371 Date Sep. 21, 1995, § 102(e) Date Sep. 21, 1995, PCT Pub. No. WO94/18734, PCT Pub. Date Aug. 18, 1994

PCT Filed Jan. 20, 1994, Ser. No. 500,949

Claims priority, application Denmark, Feb. 12, 1993, 0164/93

Int. Cl.⁶ H02G *3/18*

U.S. Cl. 174—65 R **10 Claims**

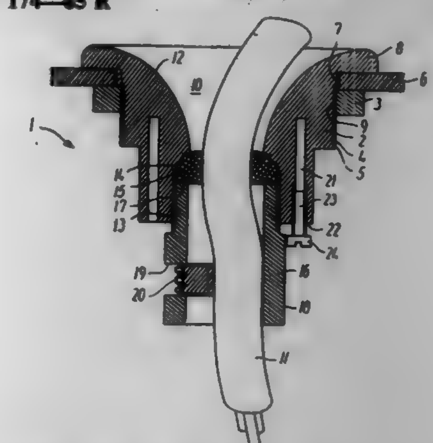

1. A cable lead-in mounted in an opening in a wall of a casing for current conductors, the cable lead-in comprising
an outer part and an inner part, said outer part including a portion passed through said opening and a through duct through which an electric cable may be run for connecting with the current conductors, and said outer part being provided with a flange which engages one side of said wall around said opening, said inner part being assembled with said outer part to clamp said outer part in the opening of said wall,
said flange engaging an outer side of said wall such that only the flange is present on the outer side of the wall, a funnel being formed in at least an outermost section of said duct and converges inwardly in a direction toward an inside of the casing, and said flange having a smaller height than an axial extent of the funnel.

5,703,329
ELECTRICAL OUTLET SHOCK PROTECTOR

Peter B. Delone, 315 Morgan La., Mary Esther, Fla. 32569

Filed Jul. 28, 1995, Ser. No. 506,974

Int. Cl.⁶ H02G *3/14*

U.S. Cl. 174—67 **11 Claims**

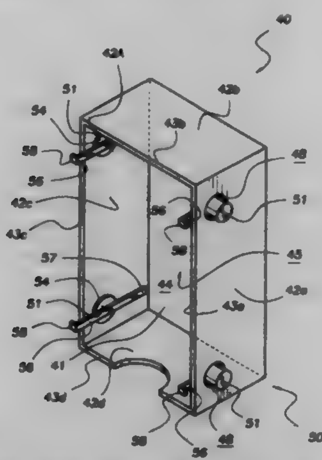

1. An electrical outlet shock protector comprising:
a wall plate attachable to an electrical outlet having a first face, said first face having a raised mounting ridge and at least one receptacle access aperture therethrough, said mounting ridge having a plurality of locking hook receiving apertures;
a cover comprising a top, a plurality of side walls adjoining said top, said side walls each having a distal edge opposite said top, an outlet cavity, said outlet cavity having an opening defined by said side wall distal edges, and a plurality of release button apertures; and
a locking mechanism for securing said cover to said wall plate, said locking mechanism comprising a plurality of flexible locking prong members and an equal number of release buttons, said flexible locking prong members engageable with said mounting ridge such that said cover may be removably attached to said wall plate preventing accidental contact with the electrical outlet.

5,703,330
WIRE HARNESS CONDUIT AND TUBE BUNDLE

Rick A. Kujawski, Mount Clemens, Mich., assignor to Bundy Corporation, Warren, Mich.

Filed Nov. 16, 1992, Ser. No. 976,524

Int. Cl.⁶ F16L *3/22*

U.S. Cl. 174—72 A **9 Claims**

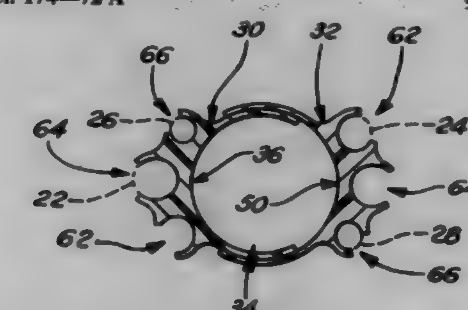

1. A carrier for at least one tube and a flexible wire harness of a vehicle comprising:
an elongate inner channel having in cross section a generally C-shape configuration with a central portion interconnecting a pair of legs terminating in spaced apart free edges forming a longitudinally extending raceway therein opening transversely to the exterior thereof and constructed and arranged to receive through its opening and in the raceway a portion of a flexible wire harness extending longitudinally therein,
an elongate outer channel having in cross section a generally C-shape configuration with a central portion interconnecting a pair of legs terminating in spaced apart free edges forming a complementary raceway extending longitudinally therein, opening transversely to the exterior thereof, and constructed and arranged to receive through its opening and in its raceway a complementary portion of said legs of said inner channel so that in assembly said channels collectively encircle and enclose a portion of the wire harness, each of said channels subtends more than a semicircle and is at least somewhat resilient and in assembly said legs of said inner channel underlap and snap into complementarily engagement with said legs of said outer channel, and
at least one tube retainer clip on the exterior of and carried by said inner channel on the central portion thereof, said clip being at least somewhat resilient, extending longitudinally of said inner channel, having therein a longitudinally extending raceway opening transversely to the exterior thereof and in cross section subtends more than a semicircle and is constructed and arranged to releasably receive and retain a tube of a vehicle, and when said channels are in assembly said retainer clip is received between said free edges of said legs of said outer channel and projects outwardly thereof.

5,703,331
CIRCUITIZED STRUCTURE INCLUDING FLEXIBLE CIRCUIT WITH ELASTOMERIC MEMBER BONDED THERETO

William Louis Brodsky, Binghamton; James Daniel Herard, Vestal; Thomas George Macek, Endicott; Timothy Lee Sharp, Berkshire, and George Joseph Shovlowsky, Owego, all of N.Y., assignors to International Business Machines Corporation, Armonk, N.Y.

Continuation of Ser. No. 217,141, Mar. 23, 1994, Pat. No. 5,468,917. This application Jul. 11, 1995, Ser. No. 500,716

Int. Cl.⁶ H05K *1/14*

U.S. Cl. 174—254 **12 Claims**

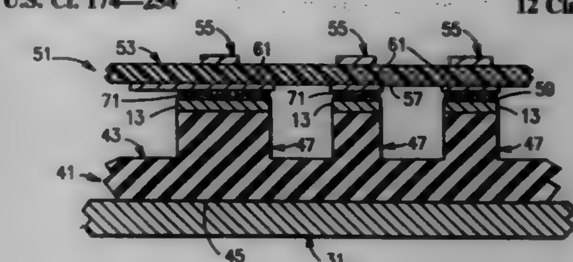

1. A circuitized structure comprising:
a flexible circuit including at least one layer of dielectric material having a plurality of electrically conductive members on a first surface thereof;
an elastomeric member including a plurality of upstanding portions;
plurality of metallic pad members, selected ones of said pad members being secured to a respective one of said upstanding portions of said elastomeric member; and
means for bonding each of said selected ones of said pad members to said flexible circuit at locations relative to respective ones of said electrically conductive members.

5,703,332
APPARATUS FOR CONVEYING VULNERABLE ARTICLES IN THE ARTICLE HOLDERS
Adrianus Wilhelmus Tas, Burgemeester Winkellaan 3, 2631 HG Nootdorp, Netherlands
Filed Jun. 13, 1995, Ser. No. 489,935
Claims priority, application Netherlands, Jun. 14, 1994, 9400969
Int. Cl.⁶ G01G *13/00;13/02;19/00;* **B65G** *47/84*
U.S. Cl. 177—52 **17 Claims**

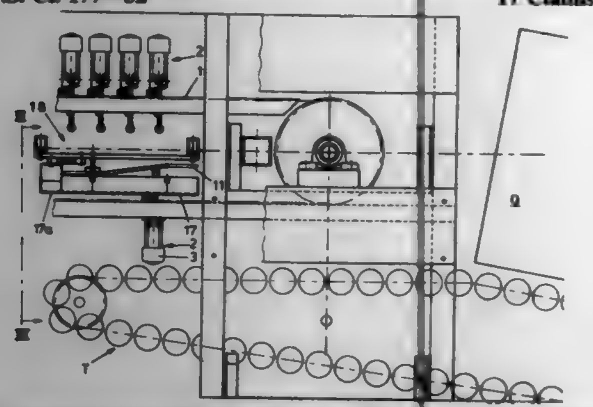

1. An apparatus comprising a conveyor (1) having article holders for conveying vulnerable articles (V), such as for instance fruits, in the article holders (2) along a path of travel, wherein the article holders are grippers (2) adapted to assume two stable positions, i.e. a gripping position wherein the articles (V) are grippingly receivable in the gripper (2), and a release position wherein articles (V) received in the gripper (2) are released in a downward direction, the grippers (2) being designed so that in the gripping position articles (V) of different dimensions are receivable therein:

wherein each gripper (2) comprises at least two gripper blades (3) wherebetween the articles (V) are grippingly receivable in the gripping position, the gripper blades (3) having a certain length and a degree of flexibility for the purpose of receiving articles (V) of different dimensions in the gripping position;

and wherein the length and extent of flexibility of the gripper blades (3) are so chosen that the ratio between the diameter of the smallest and the largest article (V) receivable in the gripping position is at least 1 to 4.

5,703,333
SURFACE MOUNT TORQUE LOADCELL
Bruce Wegner, North Haven, Conn., assignor to Wray-Tech Instruments, Inc., Stratford, Conn.
Filed Jan. 23, 1997, Ser. No. 788,042
Int. Cl.⁶ G01G *19/08*
U.S. Cl. 177—139 **18 Claims**

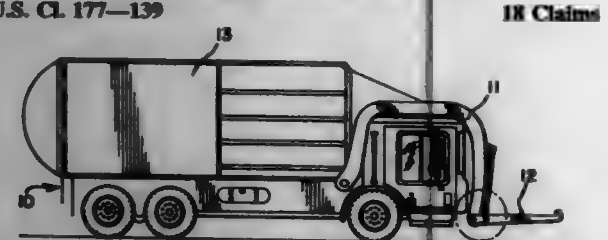

12. A method for weighing a load on a lifting apparatus mounted to a vehicle, wherein the lifting apparatus includes a lift arm assembly and a torque tube that is pivotally attached to the lift arm assembly, the method comprising the steps of:

lifting the load by means of an arm of the lift arm assembly;

measuring torque, which is generated by the load on the torque tube;

generating a first electric signal corresponding to and calibrated to the amount of torque on the torque tube; and

calculating the weight of the load lifted by the lift arm assembly with an electronic calculation device using the electric signals.

5,703,334
LOAD MEASURING DEVICE WITH A LOAD CELL AND METHOD FOR INTRODUCING A LOAD INTO THE LOAD CELL
Thomas W. Hansson, Natick, and Randall K. Hopkins, Mendon, both of Mass., assignors to HBM, Inc., Marlboro, Mass.
Filed Mar. 8, 1996, Ser. No. 612,677
Int. Cl.⁶ G01G *1/00;3/00*
U.S. Cl. 177—201 **26 Claims**

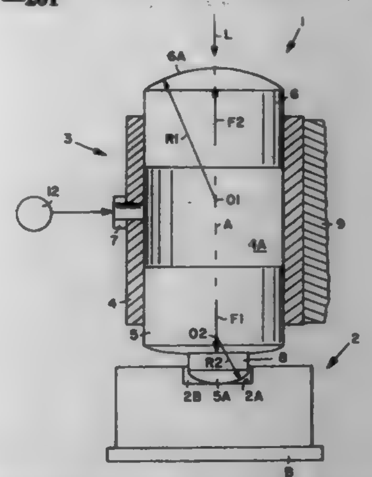

24. A rocker pin for introducing a load into a load cell, comprising a hollow cylinder having a central longitudinal axis, a first piston in said hollow cylinder, a second piston in said hollow cylinder, a pressure chamber between said first and second pistons in said hollow cylinder, an inlet for introducing a fluid under pressure into said pressure chamber, said first piston having an axially outwardly facing first surface with a curved first surface area, said second piston having an axially outwardly facing second surface with a curved second surface area thereby forming said rocker pin.

5,703,335
MARINE HORN ASSEMBLY FOR MOUNTING ON A BOAT WALL STRUCTURE
Peter K. Deutsch, Novato, Calif., assignor to Marinco, Napa, Calif.
Filed Jan. 18, 1996, Ser. No. 588,551
Int. Cl.⁶ H05K *5/00;* **G08B** *3/00*
U.S. Cl. 181—150 **8 Claims**

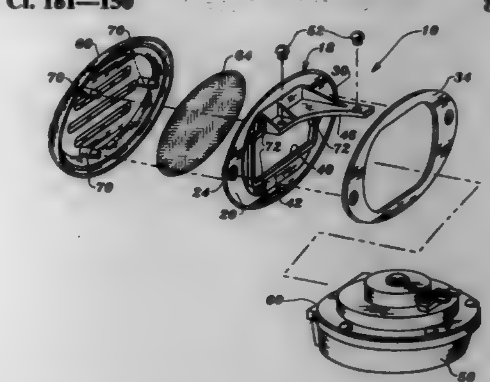

1. A marine horn assembly for mounting on a boat wall structure having inner and outer sides and defining a wall opening extending between said inner and outer sides, said marine horn assembly comprising, in combination:

a horn support including a generally flat mounting plate for flush attachment to said boat wall structure at said outer side thereof by mechanical fastener means and having a mounting plate outer peripheral wall extending about said wall opening when said mounting plate is attached to said boat wall structure by said mechanical fastener means, said horn support additionally including a support element rigidly connected to

and solely supported by said mounting plate and extending through said wall opening and beyond the inner side of the boat wall structure when said mounting plate is attached to said boat wall structure by said mechanical fastener means;

a horn rigidly connected to said support element and solely supported by said support element at the inner side of said boat wall structure and at a location spaced from said mounting plate when said mounting plate is attached to said boat wall structure by said mechanical fastener means;

a grill member having at least one grill opening, said grill member being frictionally secured to said mounting plate and covering said mounting plate, said wall opening and said mechanical fastener means attaching said mounting plate to said boat wall structure by said mechanical fastener means, said grill member being flush mounted with respect to both said mounting plate and said boat wall structure at the outer side of the boat wall structure; and

a plurality of bosses projecting from said grill member, said horn support defining a plurality of horn support openings for receiving said bosses and said bosses being frictionally engaged with said horn support when received by said horn support openings to releasably secure said grill member to said mounting plate.

5,703,336
EXHAUST NOISE SUPPRESSING APPARATUS FOR HERMETIC COMPRESSOR
Kyoung Sig Tark, and Sung Oun Park, both of Changwon, Rep. of Korea, assignors to LG Electronics Inc., Rep. of Korea
Filed Apr. 26, 1996, Ser. No. 638,293
Claims priority, application Rep. of Korea, Nov. 2, 1995, 39365/1995; Dec. 13, 1995, 49223/1995
Int. Cl.⁶ F01N *1/12*
U.S. Cl. 181—179 **6 Claims**

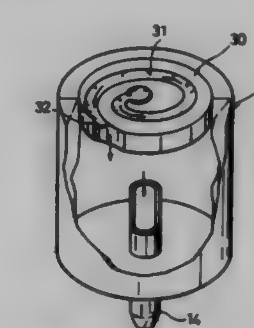

1. An exhaust noise suppressing apparatus for a hermetic compressor, the apparatus comprising:

an exhaust noise suppressing unit forming a single chamber having an inlet port at one end thereof for communicating with an exhausting chamber of the hermetic compressor and having an outlet port at another end thereof; and

damping means provided at the inlet port of the exhaust noise suppressing unit for guiding a compressed refrigerant gas from the exhausting chamber of the hermetic compressor into the exhaust noise suppressing apparatus unit while damping vibration noise in the refrigerant gas being guided as the refrigerant gas reaches the single chamber exhaust noise suppressing unit.

5,703,337
SYSTEM FOR CANCELLING SOUND WAVES
Stefan Geisenberger, Straubing, Germany, assignor to Nokia Technology GmbH, Pforzheim, Germany
Filed Jul. 18, 1996, Ser. No. 683,253
Claims priority, application Germany, Jul. 20, 1995, 195 26 456.8; Aug. 5, 1995, 195 28 888.2
Int. Cl.⁶ F01N *1/06*
U.S. Cl. 181—206 **7 Claims**

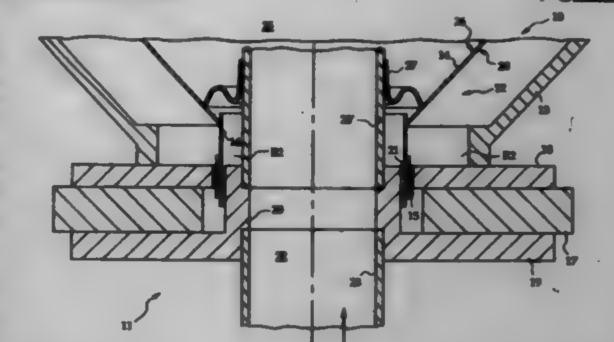

1. A system for cancelling sound waves in gas exhaust streams, comprising:

a loudspeaker (10) that comprises a magnet system (11), an oscillating system (12) formed of a diaphragm (14) and an oscillator coil (15) for oscillating with respect to the magnet system, and to a frame (13) attached to the magnet system and the diaphragm, where the magnet system (11) includes a channel (22) along an axis of symmetry of the loudspeaker (10), and

a gas exhaust pipe, having an end from where sound-affected exhaust gases exit from the gas exhaust pipe that pass through the channel (22), the pipe situated in the channel, at least in part, in such a way that it emerges into and terminates at an end thereof within a cone-shaped space (25) formed by the diaphragm (14), wherein a gas impermeable cover (27) is connected to the diaphragm (14) and to the end of the gas exhaust pipe to form a gastight barrier across a space between the diaphragm and the end of the gas exhaust pipe.

5,703,338
SOUND ABSORBER
Hermann Liese, Truderingerstr. 2, D-82008, Unterhaching, Germany
PCT No. PCT/EP94/03474, § 371 Date Oct. 10, 1995, § 102(e) Date Oct. 10, 1995, PCT Pub. No. WO95/11372, PCT Pub. Date Apr. 27, 1995
PCT Filed Oct. 21, 1994, Ser. No. 491,843
Claims priority, application Germany, Oct. 21, 1993, 9316060 U
Int. Cl.⁶ F01N *1/08*
U.S. Cl. 181—264 **8 Claims**

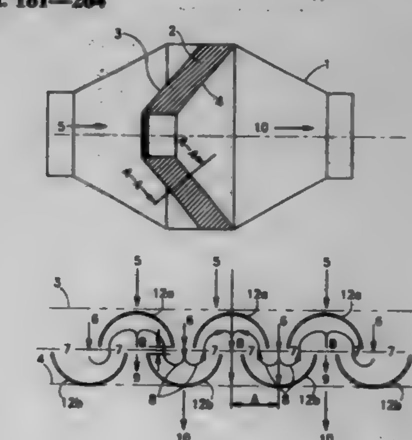

1. A sound absorber, comprising:
an outer housing having at least one inflow opening and at least one outflow opening, said housing being adapted to receive a noisy flow of gas entering said housing along an axis through said inflow opening, and exiting said housing through said outflow opening;
a sound-absorbing element positioned in said housing between said inflow opening and said outflow opening, said sound-absorbing element defining an entrance plane with a substantially unimpeded path to said inflow opening and an exit plane with a substantially unimpeded path to said outflow opening, said entrance and exit planes being substantially parallel with respect to one another; and
a plurality of baffle elements arranged in two spaced-apart rows, said baffle elements being U-shaped, V-shaped or semicircular in cross-section so as to each have an open side, a first row of said baffle elements being positioned adjacent said entrance plane and opening away from said entrance plane, and a second row of said baffle elements being positioned adjacent said exit plane and opening away from said exit plane toward the first row of elements, the two rows of elements being offset with respect to one another so that the opened sides of the baffle elements face each other in overlapping fashion, and wherein said sound-absorbing element is positioned such that said parallel entrance and exit planes are inclined at an angle of between 0° to less than 90° relative to the axis of flow of said noisy flow through said inflow opening.

5,703,339
SAFETY SWITCH
Werner Rapp, Geislingen, and Peter Schmidt, Stuttgart, both of Germany, assignors to Euchner & Co., Germany
PCT No. PCT/EP95/00689, § 371 Date Sep. 9, 1996, § 102(e) Date Sep. 9, 1996, PCT Pub. No. WO95/24726, PCT Pub. Date Sep. 14, 1995
PCT Filed Feb. 25, 1995, Ser. No. 704,741
Claims priority, application Germany, Mar. 10, 1994, 44 08 024.7
Int. Cl.[6] H01H *27/00*
U.S. Cl. 200—17 R **10 Claims**

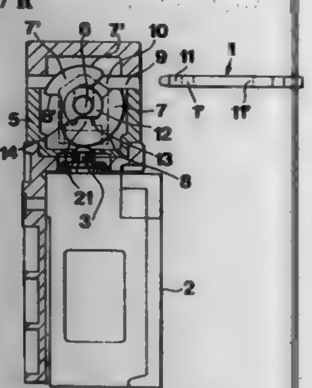

1. Safety switch comprising:
a) a switch housing including a switch;
b) a plunger, arranged in the switch housing in a fashion capable of displacement in its longitudinal direction against the force of a spring, for actuating said switch arranged in the switch housing,
c) a cam plate, which is mounted in the switch housing with an axis of rotation extending at right angles to the longitudinal axis of the plunger, and against whose lateral surface, which forms the control cam, the plunger bears,
d) a key channel in the switch housing, into which the cam plate projects,
e) a key which upon being inserted in and upon being withdrawn from the key channel positively rotates the cam plate about its axis of rotation and in so doing switches over the switch,
f) a self-closed locked device, arranged next to the cam plate and capable of being positively released by means of the key upon insertion into the key channel, for the cam plate, having at least one locking member which can be displaced in a translatory fashion and which engages in a self-closed fashion in its locked position with a receptacle arranged next to the cam plate and can be displaced by the key into the release position,
g) an actuating member constructed in one piece with the locking member and projects into the key channel in the locked position,
wherein the part of the actuating member which projects into the key channel in the locked position is connected to the locking member via a material part guided laterally past the axis of rotation.

5,703,340
METHOD AND APPARATUS FOR FORMING A HOLE FOR USING COOLING AIR IN HOLE FORMING PROCESS
Tatsuya Ohta, Hanyu, and Masami Moritani, Niigata-Ken, both of Japan, assignors to Fuji Jukogyo Kabushiki Kaisha, Tokyo, Japan
Filed Jul. 20, 1995, Ser. No. 504,963
Claims priority, application Japan, Jul. 21, 1994, 6-190149
Int. Cl.[6] B23K *10/00*
U.S. Cl. 219—121.48 **6 Claims**

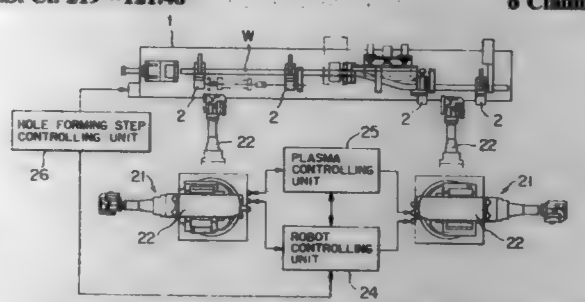

1. A hole forming apparatus having a plurality of receiving means for receiving a lengthy work mounted on a base frame, a lifter provided between said receiving means and said work for pushing said work to a predetermined position, a plurality of locators for setting said work at said predetermined position, a plasma torch mounted on said base frame for making a hole in said lengthy work, a robot provided at a vicinity of said hole forming apparatus for supporting said plasma torch and for allowing movement to at any direction, and a robot control unit for controlling said robot, comprising:
an air blowing unit with a blowing nozzle mounted on a bracket of said base frame for blowing pressurized air to an open end portion of said work; and
a space member interposed between a cooling head of said bracket and said work for spacing a gap to induce a fresh air into said open end portion and for cooling down said work while forming a hole in said work by said plasma torch so as to avoid rust and dross from adhering near said hole and to obtain a precise diameter of said hole.

5,703,341
METHOD FOR ADHESION OF METAL FILMS TO CERAMICS
Douglas H. Lowndes, Knoxville; Anthony J. Pedraza, Oak Ridge, both of Tenn.; Melvin J. DeSilva, Ithaca, N.Y., and Rajagopalan A. Kumar, Knoxville, Tenn., assignors to Lockheed Martin Energy Systems, Inc., Oak Ridge, Tenn.
Continuation-in-part of Ser. No. 156,366, Nov. 23, 1993, abandoned. This application May 17, 1995, Ser. No. 443,275
Int. Cl.[6] B23K *26/00*
U.S. Cl. 219—121.66 **35 Claims**

14. A process for adhering metal to a surface of a ceramic material comprising:

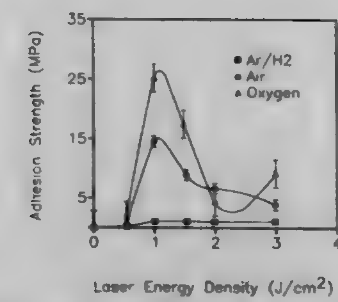

irradiating at least a portion of the surface of the ceramic material with a pulsed ultraviolet laser at an energy density above an energy density required to initiate melting of the irradiated portion of the ceramic material in order to decrease the surface roughness of the metal bonding surface; and
depositing metal on the irradiated portion of the ceramic material.

5,703,342
TEMPERATURE CONTROL METHOD USING EMPIRICALLY DETERMINED CHARACTERISTICS
Erwin Hoffmann, Hohen Neuendorf; Christian Lüdke, and Jochen Skole, both of Berlin, all of Germany, assignors to Bodenseewerk Perkin-Elmer GmbH, Uberlingen, Germany
Continuation of Ser. No. 257,690, Jun. 9, 1994, abandoned. This application Oct. 21, 1996, Ser. No. 734,162
Claims priority, application Germany, Jun. 14, 1993, 43 19 652.7
Int. Cl.[6] H05B *1/02*
U.S. Cl. 219—497 **22 Claims**

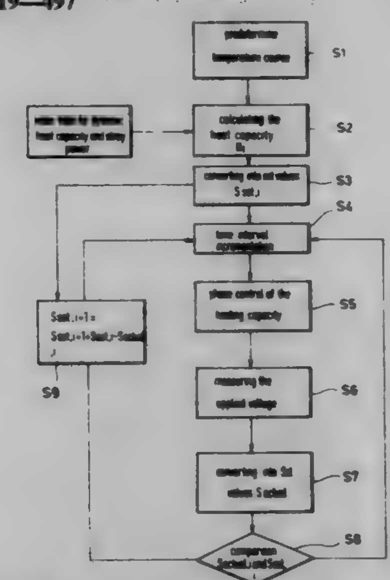

1. A method for controlling the temperature of a system comprising the steps of:
empirically determining the dynamic heating and cooling characteristics of the system;
dividing a desired temperature curve for the system to follow into predetermined time intervals;
assigning a desired temperature to each time interval;
applying an initial heating power based on the empirically determined dynamic heating and cooling characteristics to a heating device during each time interval;
measuring the actual heating power applied to said heating device during said predetermined time interval, and
when the actual heating power deviates from the initial heating power by more than a predetermined tolerance value within the predetermined time interval, changing the heating power for a following predetermined time interval in response to said deviation.

5,703,343
PROCESS AND PLANT FOR THE MANUFACTURE OF SOLID CASTINGS FROM AN ESSENTIALLY LIQUID REACTIVE MEDIUM, AND OVEN FOR HEATING AN ESSENTIALLY LIQUID MEDIUM.
Mohamad Mallah, Amberg; Horst Linn, Eschenfelden, both of Germany; Niklaus Saner, Hersberg, and Peter Voirol, Oberwil, both of Switzerland, assignors to Ciba Specialty Chemicals Corporation, Tarrytown, N.Y.
PCT No. PCT/EP94/01275, § 371 Date Jan. 30, 1995, § 102(e) Date Jan. 30, 1995, PCT Pub. No. WO94/26077, PCT Pub. Date Nov. 10, 1994
PCT Filed Apr. 25, 1994, Ser. No. 545,746
Claims priority, application European Pat. Off., May 5, 1993, 93810331; Switzerland, Jan. 12, 1994, 89/94
Int. Cl.[6] H05B *6/80*
U.S. Cl. 219—687 **5 Claims**

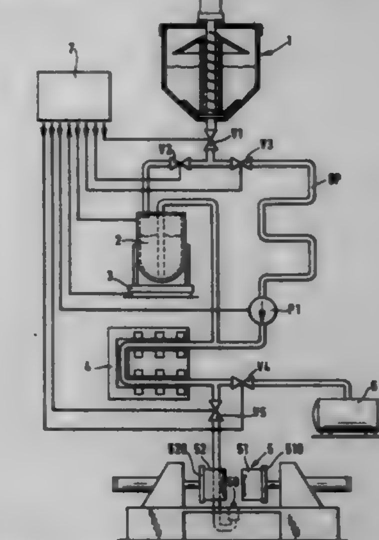

1. A process for manufacturing of castings from an essentially liquid reactive medium as casting material which, above its gelation temperature, reacts to form a solid material, in which process the medium is fed from a supply tank (1), in which the temperature of the casting material lies substantially below its gelation temperature, to a casting mould (5) of which the temperature lies above the gelation temperature of the casting material, characterized in that the casting material is substantially preheated directly before it enters the casting mould (5) to a temperature close to but below the gelation temperature of the casting material so that it is still in a state suitable to be fed into the casting mould (5).

5,703,344
ELECTRONIC FUNDS CONFIRMATION AT POINT OF TRANSACTION
E. William Bezy, San Rafael, and William Chenevich, Hillsborough, both of Calif., assignors to Visa International Service Association, Foster City, Calif.
Filed Jun. 30, 1995, Ser. No. 497,195
Int. Cl.[6] G06K *5/00;* **G06F** *17/60*
U.S. Cl. 235—379 **10 Claims**

1. A real-time point-of-transaction funds confirmation system wherein a draft is presented to a payee by a payor for later presentation by the payee or an agent of payee to a payor financial institution in exchange for good funds, the system comprising:
an electronically-readable identification of an account on which the draft is drawn, the account being the eventual source of the good funds;
an electronically-readable identification of the payor financial institution;
reading means for reading the identification of the account and the identification of the payor financial institution from the draft and for generating a request record for verification of

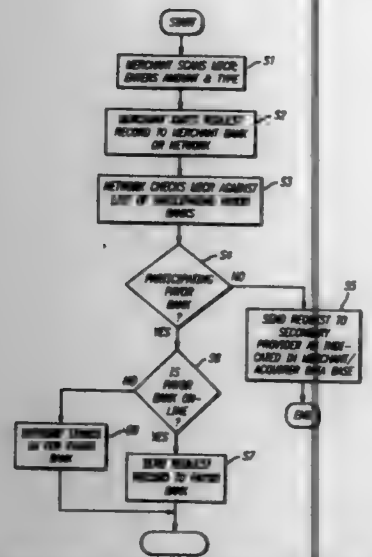

funds or guarantee of funds, said request record including the identification of the account, the identification of the payor financial institution, a transaction amount, and the request type;
a network coupler which couples the reading means to a transaction network, wherein the transaction network carries said request record;
a network for coupling a plurality of network couplers to a plurality of payor bank processors;
a payor bank processor which reads said request record and reads account data from an account identified by the account identifier to verify availability of funds in the amount indicated by the transaction amount when the request type indicates the request record is for verification of funds;
means for verifying availability of funds in the amount indicated by the transaction amount and for recording a hold on funds based on a payee bank funds guarantee policy when the request type indicates the request record is a funds guarantee request; and
means for generating and sending a response record to the network coupler, in real-time, wherein the response record indicates whether the payor bank identifier and the account identifier are valid and whether sufficient funds to cover the transaction amount are available in the account.

5,703,345
HYDROSTATIC DRIVE WITH DATA CARRIER CONTROL
Wilhelm Gollner, Neumunster, and Manfred Maiers, Wattenbek, both of Germany, assignors to Sauer Inc., Ames, Iowa
Filed Mar. 21, 1996, Ser. No. 619,011
Claims priority, application Germany, Mar. 22, 1995, 195 10 430.7
Int. Cl.[6] G07B *15/02*
U.S. Cl. 235—384 **13 Claims**

1. A control system for a hydrostatic drive unit, comprising,
a hydrostatic drive system for propelling a wheeled machine, said drive system having a hydraulic drive unit,
an electronic control unit on said machine operatively connected to said hydraulic drive unit, and being adapted to transmit and receive electronic data with respect to said hydraulic drive unit,
an external operator controlled unit detachably connected to said electronic control unit,
said operator controlled unit including a detachable data carrier card having an interface capable of transmitting data to and

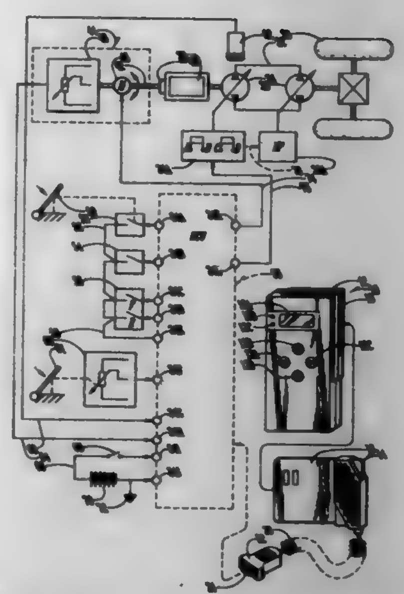

receiving data from said hydraulic drive unit through said electronic control unit.

5,703,346
CARD RECEIVER CASE
Hervé Guy Bricaud, and Fabrice Valcher, both of Dole, France, assignors to ITT Corporation, New York, N.Y.
Filed Mar. 8, 1996, Ser. No. 612,572
Claims priority, application France, Jul. 18, 1994, 94 08842; WIPO, Jul. 18, 1995, PCT/FR95/00958
Int. Cl.[6] G06K *7/00*
U.S. Cl. 235—44.1 **18 Claims**

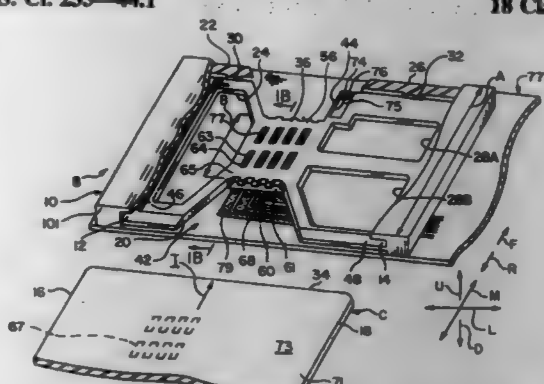

1. A case for receiving an electronic card of predetermined width and thickness and that has a face with electrical card terminals and that has laterally spaced opposite card sides, comprising:
a receiver housing that forms a pair of laterally spaced slideways that closely slidably guide the card sides in forward longitudinal movement into said housing, and at least one plate-like crosspiece that connects said slideways;
a connector that includes a plastic molded connector frame and a plurality of contacts that each have contact mount parts fixed to said connector frame and that each have projecting card-engaging contact blades;
said receiver housing being a unitary molded part that includes said slideways and said crosspiece, with each slideway including a top wall and a bottom wall and a side wall and said connector is fixedly mounted on said crosspiece with said contact blades positioned to engage said card terminals as the card is slid forwardly into said housing.

5,703,347
MULTIPLE-INTERFACE SELECTION SYSTEM FOR COMPUTER PERIPHERALS
Brad R. Reddersen; Phillip W. Shepard; Rockie D. Moch, and Jon Paul Charles Williams, all of Eugene, Oreg., assignors to Spectra-Physics Scanning Systems, Inc., Eugene, Oreg.
Continuation of Ser. No. 305,517, Sep. 13, 1994, Pat. No. 5,563,402, which is a continuation-in-part of Ser. No. 39,606, Mar. 25, 1993, Pat. No. 5,347,113, which is a continuation-in-part of Ser. No. 34,189, Mar. 22, 1993, Pat. No. 5,330,370, which is a continuation of Ser. No. 788,267, Nov. 4, 1991, abandoned. This application Sep. 9, 1996, Ser. No. 706,736
Int. Cl.[6] G06K *7/10*
U.S. Cl. 235—472 **30 Claims**

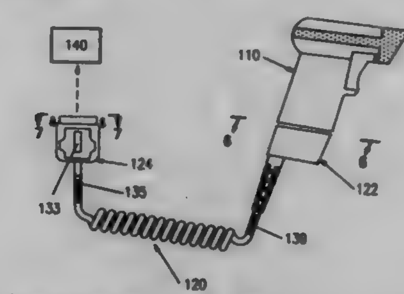

18. A multiple interface data reading system comprising a data reader and an interconnect cable detachably connectable to the data reader, the interconnect cable being removable by being connecting to and being disconnected from the data reader wherein hardware and/or firmware of the data reading system is automatically configured to interface with a given host changing the interconnect cable and connecting the interconnect cable to the data reader.

5,703,348
HAND-HELD OPTICAL CODE READER
Masashi Suzuki, and Makoto Sugiyama, both of Mishima, Japan, assignors to Kabushiki Kaisha TEC, Tokyo, Japan
Filed Dec. 19, 1995, Ser. No. 574,717
Claims priority, application Japan, Dec. 26, 1994, 6-321897; Feb. 23, 1995, 7-035701
Int. Cl.[6] G06K *7/10*
U.S. Cl. 235—472 **13 Claims**

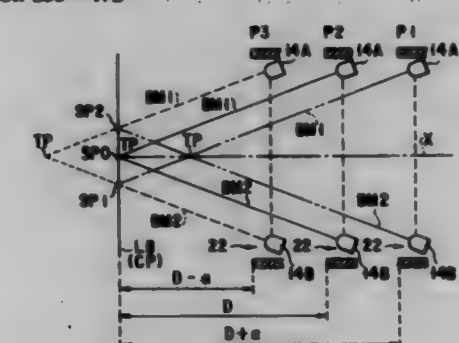

1. An optical code reader comprising:
a reading window;
a guide light source for guiding a two-dimensional code into a reading range outside said read window;
an illumination light source for illuminating the two-dimensional code guided into the reading range;
an optical system for focusing light reflected from the two-dimensional code illuminated by said illumination light source to form an image;
a reading unit for sensing the image formed by said optical system and which reads the two-dimensional code on the basis of the sensed image; and
a hand-held frame member, having an opening which serves as said read window, for holding said guide light source, said illumination light source, said optical system, and said reading unit;
wherein:
said optical system has a focal distance by which the image of the two-dimensional code is most clearly formed in a state where the two-dimensional code is located at a target point which is a specific distance away from said read window;
said guide light source has a group of light-emitting elements for projecting spotlight beams which intersect at the target point;
said reading unit includes sensing means for sensing an image formed by said optical system; and processing means for processing the image sensed by said sensing means;
said processing means includes instructing means for generating a read instruction when the location of said two-dimension code coincides with the target point; driving means for driving said guide light source before generation of the read instruction, and for driving said illumination light source after generation of said read instruction; and decoding means for decoding the image of the two-dimensional code illuminated by said illumination light source;
said instructing means includes detecting means for detecting a single spot formed by said spot light beams in the image sensed by said sensing means; and
said detecting means includes registering means for registering each portion having predetermined features in the image sensed by said sensing means as a spot.

5,703,349
PORTABLE DATA COLLECTION DEVICE WITH TWO DIMENSIONAL IMAGING ASSEMBLY
Robert F. Meyerson, Akron, Ohio, and Yujiun P. Wang, Fort Myers, Fla., assignors to Metanetics Corporation, Fort Myers, Fla.
Continuation-in-part of Ser. No. 544,618, Oct. 18, 1995, and Ser. No. 494,435, Jun. 26, 1995. This application Dec. 20, 1995, Ser. No. 580,063
Int. Cl.[6] G06K *7/10*
U.S. Cl. 235—472 **8 Claims**

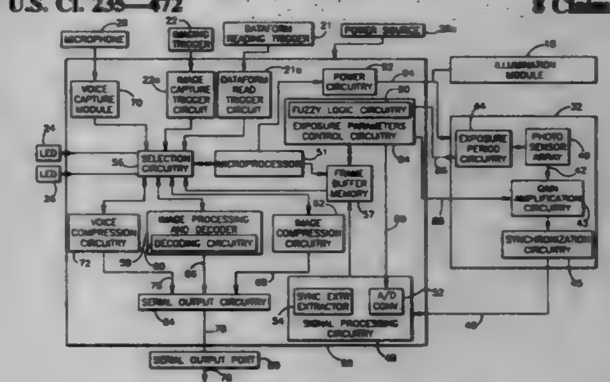

1. A portable data collection device comprising:
a) an image sensor, including an array of photosensor elements generating a signal representative of an image of a target area;
b) an optic system positioned to focus illumination reflected from the target area onto said image sensor;
c) image buffering circuitry coupled to said image sensor, receiving said signal and buffering a digital image representation of the target area;
d) decoder circuitry coupled to said image buffering circuitry for decoding a dataform in the image area and providing a decoded representation of said dataform;
e) an audio input circuit including a microphone providing a signal representative of operator speech commenting about the target area and analog to digital circuitry for providing a digital audio representation of such speech;

f) output port circuitry coupled to said decoder circuitry and said audio input circuitry for outputting at least one of said decoded representation and said digital audio representation; and

g) selection circuitry coupled to said decoder circuitry and said image compression circuitry for selectively determining whether to output the decoded representation or the digital audio representation.

5,703,350

DATA CARRIERS HAVING AN INTEGRATED CIRCUIT UNIT

Ephraim Suhir, Randolph, N.J., assignor to Lucent Technologies Inc., Murray Hill, N.J.

Filed Oct. 31, 1995, Ser. No. 551,241

Int. Cl.⁶ G06K *19/02; 19/06*

U.S. Cl. 235—492 **27 Claims**

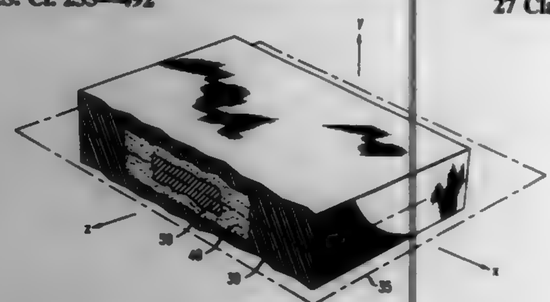

1. A data carrier, comprising:

a card composed of a material having a Young's modulus, said card including a horizontal midplane therein,

a cavity filled with a material having a Young's modulus and including a length, and a thickness, wherein said cavity is positioned by said thickness in said horizontal midplane of the card, and

an integrated circuit composed of a material having a Young's modulus, said integrated circuit including a length and a thickness of less than 12 mils, located in said cavity and positioned by said thickness in the horizontal midplane of said card, wherein said Young's modulus of said cavity material is higher than the Young's modulus of said card and lower than the Young's modulus of said material in said integrated circuit.

5,703,351

AUTOFOCUS MODULE HAVING A DIFFRACTIVELY ACHROMATIZED TOROIDAL LENS

Mark M. Meyers, Hamlin, N.Y., assignor to Eastman Kodak Company, Rochester, N.Y.

Filed Nov. 18, 1996, Ser. No. 748,729

Int. Cl.⁶ G01J *1/20*

U.S. Cl. 250—201.2 **18 Claims**

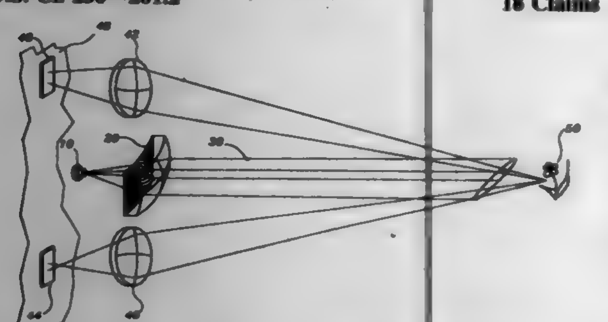

1. An autofocus module for determining the distance of an object from a detector plane, comprising:

means for generating a beam of light that is divergent in the horizontal direction and collimated in the vertical direction said beam of light reflecting from an object in its path;

at least one pair of receiver lenses which have focal lengths that are longer and shorter than the distance to the detector plane positioned to receive the beam of light reflected from the object;

at least one pair of photodetectors each positioned at the detector plane and associated with one of said pair of receiver lenses for providing output signals indicative of the reflected intensity received from the object; and

means for determining the difference in output signals from said at least one pair of photodetectors whereby said difference is a function of the distance of the object from the detector plane.

5,703,352

IMAGING DEVICE WITH ANTI-CONDENSATION PROVISION

Rudolph M. Snoeren, and Coenraad A.A.M. Vugts, both of Eindhoven, Netherlands, assignors to U.S. Philips Corporation, New York, N.Y.

Filed Nov. 28, 1995, Ser. No. 563,707

Claims priority, application European Pat. Off., Nov. 30, 1994, 94203479

Int. Cl.⁶ H01J *40/14*

U.S. Cl. 250—208.1 **9 Claims**

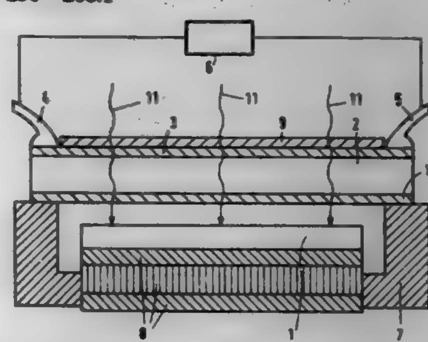

1. An imaging device provided with an image sensor element for electromagnetic radiation and a covering body spaced apart therefrom which is transparent to said radiation and through which the radiation can reach the sensor element, characterized in that a transparent, electrically conducting layer is provided on the covering body and is provided with two connection electrodes for heating the covering body during operation by electric power supplied through the electrodes and dissipated in said transparent layer, a heat-reflecting layer is provided on a surface of the covering body facing the image sensor element, and the transparent electrically conducting layer is provided on a surface of the covering body facing away from the image sensor element.

5,703,353

OFFSET REMOVAL AND SPATIAL FREQUENCY BAND FILTERING CIRCUITRY FOR PHOTORECEIVER SIGNALS

Travis N. Blalock, Santa Clara; Richard A. Baumgartner, Palo Alto; Thomas Hornak, Portola Valley, and David Beard, Palo Alto, all of Calif., assignors to Hewlett-Packard Company, Palo Alto, Calif.

Filed Jan. 25, 1996, Ser. No. 591,076

Int. Cl.⁶ H01J *40/14*

U.S. Cl. 250—214 C **11 Claims**

1. Circuitry for transferring signals comprising:

a plurality of signal generating circuits, each said circuit having an output;

a plurality of DC removal means for removing spatial frequency components from said outputs of said circuits, each DC removal means being operatively associated with a particular

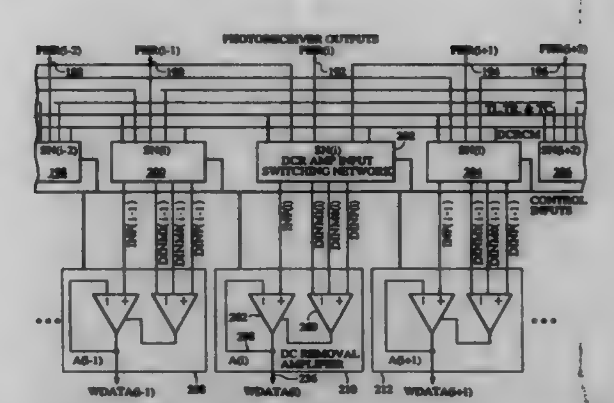

circuit and having a primary input connected to receive a signal of interest from the output of said particular circuit, said each DC removal means including at least one secondary input connected to receive a signal output from one of said circuits proximal to said particular circuit, said each DC removal means having a difference means for providing an output signal responsive to analog signal differences between said signal of interest and said signal outputs received at said at least one secondary input.

5,703,354

BINOCULAR NIGHT VISION DEVICE AND METHOD OF MAKING AND USING THE DEVICE

Gary A. Wannagot, Mesa; Curtis Brent Keepers; Timothy R. Goebel, both of Tempe; James M. Cwinkala, Jr., Chandler, and Clifford J. Connors, Tempe, all of Ariz., assignors to Litton Systems, Inc., Woodland Hills, Calif.

Filed Feb. 28, 1996, Ser. No. 607,947

Int. Cl.⁶ G02B *23/00*

U.S. Cl. 250—214 VT **21 Claims**

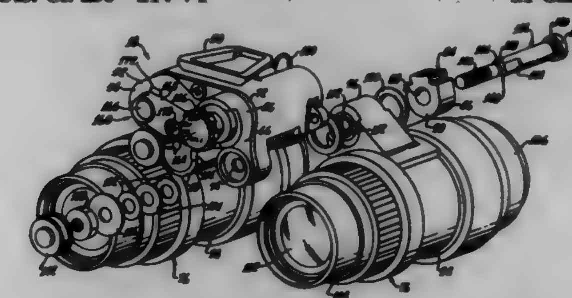

15. A binocular night vision device (BNVD) comprising:

a pair of monocular night vision scopes;

each monocular night vision scope including one of a respective pair of monocular housing portions each having an objective lens and an eyepiece lens, each defining a substantially closed chamber therein, and each having an outwardly-protruding monocular housing ear defining a singular opening from said substantially closed chamber therein;

a pair of image intensifier tube modules received respectively one in each substantially closed chamber of said pair of monocular housing portions:

a central housing portion defining an outwardly-opening recess and a substantially closed cavity, said central housing portion further defining a pair of opposite outwardly-extending central housing portion ears, each one of said pair of central housing portion ears defining a respective opening from said cavity and including means for pivotally coupling sealingly with a respective one of said pair of monocular housing portions at said monocular housing portion ear thereof to communicate said cavity of said central housing portion with each substantially closed chamber of said pair of monocular housing portions;

a voltage step-up circuit received in said central housing portion cavity for providing power to said pair of image intensifier tube modules, said recess being configured to accept a single battery powering said voltage step-up circuit, and means for electrically connecting power from said battery to each of said pair of image intensifier tube modules via said voltage step-up circuit;

whereby said central housing portion both pivotally carries and electrically powers said pair of monocular night vision scopes with pivotal movement of the monocular night vision scopes providing for interpupillary distance adjustment.

5,703,355

IMAGE SENSOR COVERED BY A PROTECTIVE FILM AND AN ORGANIC FILM TO DECREASE VARIATIONS IN SPECTRAL SENSITIVITY

Seiichi Kawamoto, Kanagawa, Japan, assignor to Sony Corporation, Tokyo, Japan

Continuation of Ser. No. 230,147, Apr. 19, 1994, abandoned. This application Feb. 1, 1996, Ser. No. 593,107

Claims priority, application Japan, Apr. 20, 1993, P05-116326

Int. Cl.⁶ H01J *40/14;* **G01J** *3/34*

U.S. Cl. 250—214.1 **16 Claims**

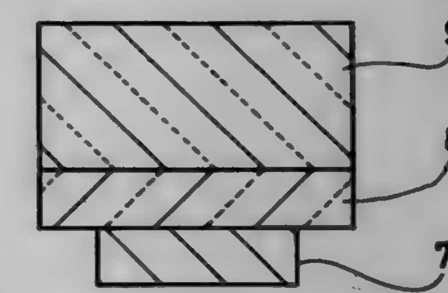

1. A monochrome sensor, wherein a light-transmitting film is formed directly on top of a protective film without any layers of intervening material disposed therebetween, the protective film covering at least a sensor unit without any layers of intervening material disposed therebetween, said light-transmitting film forming an external light-incident surface for said sensor without any layers of material disposed on top of the light-transmitting film, whereby variations in the wavelength of the maximum spectral sensitivity of said sensor are reduced by said light-transmitting film.

5,703,356

POINTING DEVICE UTILIZING A PHOTODETECTOR ARRAY

Marc Bidiville, Pully, Switzerland; Eric Raeber, Menlo Park, Calif.; Javier Arreguit, Lausanne, Switzerland; Harthmuth Buczek, Marin-Epagnier, Switzerland; Floris A. Van Shaik, Chavannes, Switzerland; François Bauduin, Chézard, Switzerland, and Denis O'Keeffe, Eire, Ireland, assignors to Logitech, Inc., Fremont, Calif.

Continuation-in-part of Ser. No. 199,982, Feb. 18, 1994, abandoned, which is a continuation of Ser. No. 956,907, Oct. 5, 1992, Pat. No. 5,288,993. This application Apr. 19, 1995, Ser. No. 424,125

Int. Cl.⁶ G09G *5/08*

U.S. Cl. 250—221 **34 Claims**

1. A cursor pointing device for controlling the position of a cursor on a display comprising:

a ball having thereon a fixed irregular pattern of areas which appear light and dark when illuminated by substantially monochromatic radiation;

source means for illuminating a portion of said ball with said substantially monochromatic radiation;

sensor means responsive to said substantially monochromatic radiation reflected from the ball and impinging on the sensor for creating an output; and

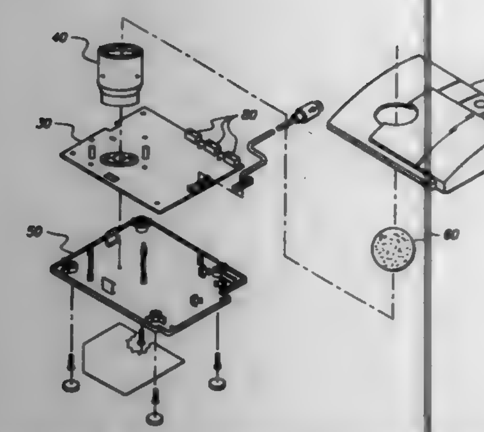

processing means responsive to the output from the sensor means for generating a cursor control output.

5,703,357
METHODS FOR WAVELENGTH DISCRIMINATION OF MONOCHROMATIC LIGHT BEAMS

Ishiang Shih, 3300 Bahama St., Brossard, Quebec, Canada, J4Z 2R4; Linh Ngo Phong, 1035 Viger, Sainte Foy, Quebec, G1W 2P8, Canada; Cindy Xing Qiu, 6215 Bienville St., Brossard, Quebec, Canada, J4Z 1W6, and Philips Laou, 4980 Longelier St., Montreal, Quebec, Canada, H1M 5A1

Filed Sep. 22, 1994, Ser. No. 310,329
Claims priority, application Canada, Sep. 27, 1993, 2107062
Int. Cl.[6] G01J *3/50;* H01J *5/16;40/14*
U.S. Cl. 250—226 21 Claims

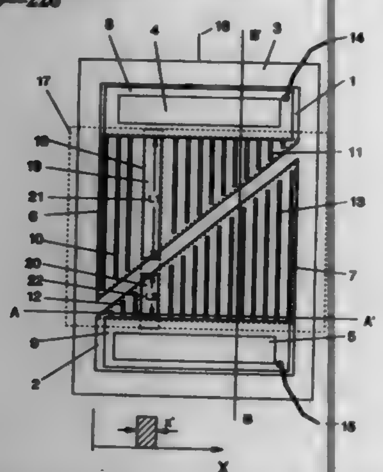

1. A method for detection and wavelength discrimination of a monochromatic light beam comprising;
installing at least one detector pair consisting of a first photo detector with progressively increasing active area per unit distance in one direction and a second photo detector aligned with the first, with progressively decreasing active area per unit distance in said direction,
installing at least one variable filter on top of said detector pair, the maximum transmission wavelength of said variable filter varying with distance in said direction,
measuring a first photo current generated in said first photo detector due to illumination of said monochromatic light beam through said variable filter,
measuring a second photo current generated in said second photo detector due to illumination of said monochromatic light beam through said variable filter,
comparing value of said first photo current and value of said second photo current,
determining wavelength of said light beam from variation of maximum transmission wavelength of said variable filter in said direction.

5,703,358
METHOD FOR GENERATING FILTERED NOISE SIGNAL AND BRAODBAND SIGNAL HAVING REDUCED DYNAMIC RANGE FOR USE IN MASS SPECTROMETRY

Doneil J. Hoekman, Gilroy, and Paul E. Kelley, San Jose, both of Calif., assignors to Teledyne Electronic Technologies, Mountain View, Calif.

Continuation of Ser. No. 281,505, Jul. 27, 1994, Pat. No. 5,449,905, which is a continuation of Ser. No. 75,780, Jun. 11, 1993, abandoned, which is a continuation of Ser. No. 928,262, Aug. 11, 1992, Pat. No. 5,256,875, which is a continuation-in-part of Ser. No. 884,455, May 14, 1992, Pat. No. 5,274,233, which is a continuation of Ser. No. 662,191, Feb. 28, 1991, abandoned. This application Sep. 11, 1995, Ser. No. 526,599
Int. Cl.[6] B01D *59/44;* H01J *49/40*
U.S. Cl. 250—282 7 Claims

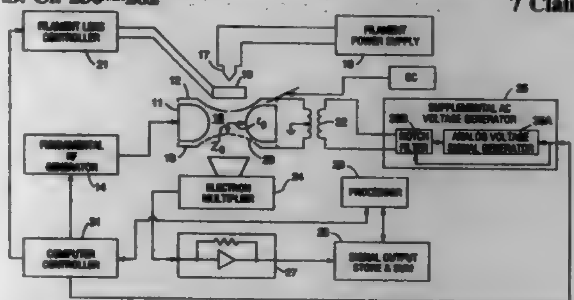

1. A mass spectrometry method, including the steps of:
(a) establishing a three-dimensional trapping field capable of storing ions having mass to charge ratio within a selected range within a three-dimensional trap volume bounded by a set of electrodes;
(b) generating a notched broadband signal composed of frequency components, said notched broadband signal comprising a sufficient number of said frequency components to be capable of resonating out of the trap volume unwanted ions having mass-to-charge ratio outside a notch portion of said range, in such a manner that prior knowledge of unwanted mass to charge ratio ion frequencies of motion outside said notch portion is not necessary to determine the frequency components of said notched broadband signal; and
(c) applying the notched broadband signal to at least one of the electrodes to resonate out of the trap volume unwanted ions having mass-to-charge ratio within the range but outside said notch portion of the range.

5,703,359
COMPOSITE MEMBRANE AND SUPPORT ASSEMBLY

Francis M. Wampler, III, Syracuse, N.Y., assignor to Leybold Inficon, Inc., East Syracuse, N.Y.

Filed Jul. 29, 1996, Ser. No. 681,945
Int. Cl.[6] H01J *49/04;* B01D *69/10*
U.S. Cl. 250—288 51 Claims

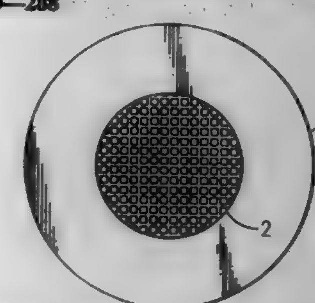

1. A composite membrane and support assembly, comprising:
a semipermeable membrane;
a fiber member for supporting the semipermeable membrane, and;
a rigid perforated member for supporting the semipermeable membrane and the fiber member.

5,703,360
AUTOMATED CALIBRANT SYSTEM FOR USE IN A LIQUID SEPARATION/MASS SPECTROMETRY APPARATUS

Steven M. Fischer, Hayward; Robert G. Nordman, Palo Alto, and Mark H. Werlich, Santa Clara, all of Calif., assignors to Hewlett-Packard Company, Palo Alto, Calif.

Filed Aug. 30, 1996, Ser. No. 706,390
Int. Cl.[6] H01J *49/04*
U.S. Cl. 250—288 16 Claims

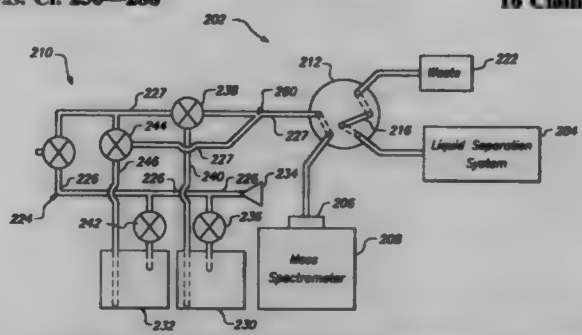

1. A method of calibrating a mass spectrometer in a liquid separation/mass spectrometer apparatus during processing of a liquid sample, wherein the apparatus includes a mass spectrometer, a liquid separation system which processes a liquid sample to yield an effluent, a calibrant system for providing a volume of a pneumatically pressurized reference liquid, an ion source in fluid communication with the mass spectrometer, and a switching valve in fluid communication with the liquid separation system, the calibrant system and the ion source, the switching valve having a first position which provides fluid communication between the liquid separation system and the ion source, and a second position which simultaneously provides fluid communication of the reference liquid from the calibrant system to the ion source and effluent from the liquid separation system to waste, the method comprising:
(a) initiating processing of a liquid sample by the liquid separation system to provide an effluent;
(b) actuating the switching valve to the first position to communicate the effluent from the liquid separation system to the ion source for conversion therein to an ionized aerosol and for delivery therefrom to the mass spectrometer to initiate analysis of the liquid sample;
(c) actuating the switching valve to the second position to communicate the reference liquid from the calibrant system to the ion source for conversion therein to an ionized aerosol and for delivery therefrom to the mass spectrometer while communicating the effluent from the liquid separation system to waste;
(d) obtaining a mass spectrum of the ionized reference liquid molecules from the mass spectrometer; and
(e) actuating the switching valve back to the first position to communicate the effluent from the liquid separation system to the mass spectrometer to resume analysis of the liquid sample.

5,703,361
CIRCUIT SCANNING DEVICE AND METHOD

Richard G. Sartore, Bradley Beach, N.J., assignor to The United States of America as represented by the Secretary of the Army, Washington, D.C.

Filed Apr. 30, 1996, Ser. No. 649,826
Int. Cl.[6] G01N *23/225;* H01J *37/256;37/28*
U.S. Cl. 250—310 1 Claim

1. A method for mapping the overall layout and lateral dimensions of a conductive layer in an integrated circuit having a body of substrate material that includes a surface on which the conductive layer is disposed and having a coating of an insulation material disposed thereover; the conductive layer, body of substrate material and insulation material each having different x-ray radiation output in response to electron irradiation inputs, the method comprising the steps of;

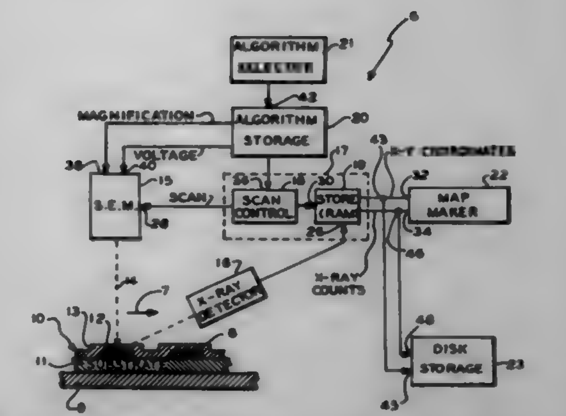

scanning an area of interest on the integrated circuit with a beam of electrons having the energy level thereof adjusted to irradiate both the insulation material and the conductive layer;
monitoring x-ray radiation synchronously with the scanning, at X-Y pixel locations within the area of interest;
storing a first map of the x-ray radiation monitored at each X-Y pixel location during the scanning;
rescanning the area of interest with a beam of electrons having the energy level thereof adjusted to irradiate the insulation material only;
monitoring the x-ray radiation synchronously with the rescanning, at the X-Y pixel locations;
storing a second map of the x-ray radiation monitored at each X-Y pixel location during the rescanning;
subtracting the x-ray radiation monitored at each X-Y pixel location for the second map from the x-ray radiation monitored at each X-Y pixel location for the first map, to derive a third map from the x-ray radiation that relates to only the conductive layer at each X-Y pixel location.

5,703,362
METHOD FOR NONDESTRUCTIVE/NONCONTACT DETECTION AND QUANTIFICATION OF ALPHA CASE ON A SURFACE OF A WORKPIECE MADE OF TITANIUM OR A TITANIUM-BASED ALLOY

John W. Devitt, Loveland, Ohio; Thomas R. Edwards, Pelzer, S.C., and Thomas E. Bantel, Cincinnati, Ohio, assignors to General Electric Company, Cincinnati, Ohio

Filed Jan. 2, 1996, Ser. No. 581,812
Int. Cl.[6] G01N *21/01;21/71*
U.S. Cl. 250—341.8 11 Claims

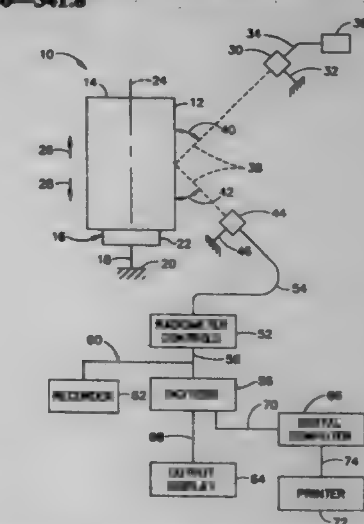

1. A method for nondestructive/noncontact detection and quantification of alpha case on a surface of a workpiece made of a material selected from a group consisting of titanium and titanium-based alloys, said method comprising the steps of:

reflecting infrared radiation off of a selected portion of the surface of the workpiece;

sensing the reflected infrared radiation from the selected portion of the surface of the workpiece with a detector and creating an image of intensity of the reflected infrared radiation sensed by the detector versus distance along the selected portion of the surface; and

detecting the presence of any alpha case on the selected portion of the surface of the workpiece, wherein said step of detecting comprises the step of comparing the image of intensity of the reflected infrared radiation sensed by the detector versus distance along the selected portion of the surface of the workpiece to a predetermined image of intensity of the reflected infrared radiation versus distance along the selected portion of the surface known to be indicative of the absence of alpha case, wherein the presence of alpha case will cause a reduction in intensity of the reflected infrared radiation along the selected portion of the surface of the workpiece relative to that of the predetermined intensity.

7. A method for nondestructive/noncontact detection and quantification of alpha case on a surface of a workpiece made of a material selected from a group consisting of titanium and titanium-based alloys, said method comprising the steps of:

reflecting infrared radiation off of a selected portion of the surface of the workpiece;

sensing the reflected infrared radiation from the selected portion of the surface of the workpiece with a detector;

detecting the presence of any alpha case on the selected portion of the surface of the workpiece by comparing the intensity of the reflected infrared radiation from the selected portion of the surface of the workpiece to a predetermined intensity known to be indicative of the absence of alpha case, wherein the presence of alpha case will cause a reduction in intensity of the reflected infrared radiation from the selected portion of the surface of the workpiece relative to that of the predetermined intensity;

said step of reflecting infrared radiation off of the selected portion of the surface of the workpiece includes the steps of;

positioning a controlled source of infrared radiation spaced apart from the surface of the workpiece,

directing the infrared radiation emitted by the source onto the selected portion of the surface of the workpiece,

creating an image from the reflected infrared radiation sensed by the detector,

disposing a target between the source of the infrared radiation and the selected portion of the surface of the workpiece so as to create a predetermined pattern within the image of the reflected infrared radiation from the selected portion; and

said step of detecting further comprises the step of comparing the intensity of the reflected infrared radiation within the image of the reflected infrared radiation to the predetermined intensity and the clarity of the predetermined pattern within the image of the reflected infrared radiation from the selected portion of the surface of the workpiece to the clarity of the predetermined pattern within an inspection standard image known to be indicative of an absence of alpha case.

5,703,363

INFRARED TO VISIBLE LIGHT IMAGE CONVERSION DEVICE

Robert S. Hayes, Lawndale, Calif., assignor to HE Holdings, Inc., Los Angeles, Calif.

Filed Apr. 25, 1996, Ser. No. 638,006

Int. Cl.⁶ G01J *5/20;* **H01L** *31/14;31/147*

U.S. Cl. 250—332 **16 Claims**

1. An image conversion device comprising:

first means disposed on a substrate for detecting an infrared image, said first means including an array of multiple quantum well detectors; and

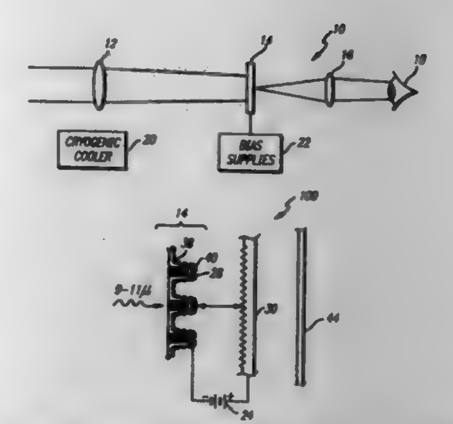

second means disposed on said first means for converting the detected infrared image to a visible image, whereby said first means and said second means comprise a single monolithic assembly.

5,703,364

METHOD AND APPARATUS FOR NEAR-INFRARED QUANTITATIVE ANALYSIS

Robert D. Rosenthal, Gaithersburg, Md., assignor to Futrex, Inc., Gaithersburg, Md.

Filed Feb. 15, 1996, Ser. No. 601,858

Int. Cl.⁶ G01N *21/35*

U.S. Cl. 250—339.12 **15 Claims**

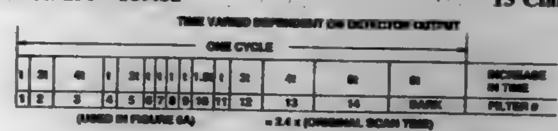

1. A method for performing near-infrared (NIR) quantitative analysis, comprising the steps of:

providing NIR radiation at a plurality of different wavelengths for illumination of an object to be analyzed;

detecting NIR radiation transmitted through said object and accumulating detection data for each of said plurality of wavelengths; and

varying the amount of time that radiation at each wavelength illuminates said object according to the output level of radiation at each wavelength so as to provide substantially similar detection data resolution for each of said plurality of wavelengths.

5,703,365

INFRARED SPECTROSCOPIC ANALYSIS METHOD FOR GASES AND DEVICE EMPLOYING THE METHOD THEREIN

Yoshio Ishihara; Hiroshi Masusaki; Shang-Qian Wu, and Koh Matsumoto, all of Tsukuba, Japan, assignors to Nippon Sanso Corporation, Tokyo, Japan

PCT No. PCT/JP95/00523, § 371 Date Nov. 20, 1995, § 102(e) Date Nov. 20, 1995, PCT Pub. No. WO95/26497, PCT Pub. Date Oct. 5, 1995

PCT Filed Mar. 22, 1995, Ser. No. 545,580

Claims priority, application Japan, Mar. 25, 1994, 6-056334; Mar. 25, 1994, 6-056335; Jan. 17, 1995, 7-005329

Int. Cl.⁶ G01N *21/35;21/39*

U.S. Cl. 250—339.13 **19 Claims**

1. An infrared spectroscopic analysis device comprising:

a wavelength tunable diode laser that oscillates infrared region light;

means for passing light oscillated from the laser through a gas to be measured;

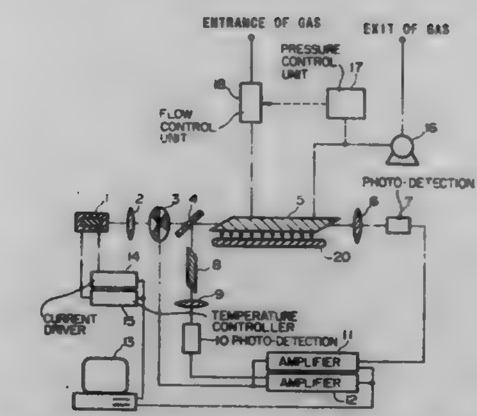

means for measuring the intensity of the laser light which has passed through the gas to be measured, wherein infrared spectroscopy is used to analyze a gaseous impurity in the gas to be measured;

means for lowering the pressure of the gas to be measured:

means for irradiating the gas to be measured with light having a photon energy of 0.5 eV or greater;

means for branching the light oscillated from the diode laser and passing a first portion of the branched light through the gas to be measured while passing a second portion of the branched light through the gaseous impurity alone;

means for respectively measuring the absorption spectrum of the light passed through the gas to be measured and the absorption spectrum of the light which passed through the gaseous impurity alone; and

means for comparing the absorption spectrum of the light which passed through the gas to be measured and the absorption spectrum for light which passed through the gaseous impurity alone, recognizing from among the absorption peaks of the absorption spectrum of the light which passed through the gas to be measured the absorption peak for which the absorption wavelength coincides with the absorption peak of the absorption spectrum for the light which passed through the gaseous impurity alone, and detecting the absorption intensity of this absorption peak.

5,703,366

OPTICAL SENSING WITH CRYSTAL ASSEMBLY SENSING TIP

Donald W. Sting, New Canaan, Conn., and Milan Milosevic, Fishkill, N.Y., assignors to ASI Applied Systems, L.L.C., Norwalk, Conn.

Continuation of Ser. No. 242,360, May 13, 1994, Pat. No. 5,552,604. This application Aug. 30, 1996, Ser. No. 706,169

Int. Cl.⁶ G01N *21/00*

U.S. Cl. 250—341.2 **55 Claims**

1. An optical analytical system having a source of infrared energy, an infrared detector system, and a crystal assembly comprising a first crystal member having at least one circumferential focusing surface, and a crystal disc,

an optically transmitting interface between at least a portion of one surface of the first crystal member and at least a portion of an adjacent surface of the crystal disc,

said crystal disc having a sample contacting surface which is opposite said optically transmitting interface,

said source energy being redirected by a circumferential focusing surface, transmitted through said optical interface, and totally internally reflected in the second crystal at least once at the sample contacting surface, whereby said source energy obtains sample specific encoding; and

said encoded source energy being transmitted from the crystal disc through the optically transmitting interface into said first

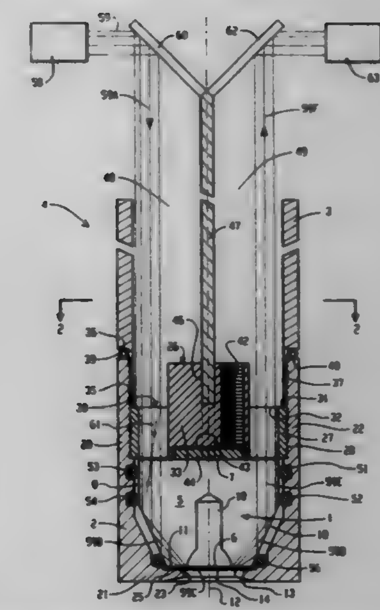

crystal member and redirected by a circumferential focusing surface to the infrared detector system for sample analyzation.

5,703,367

HUMAN OCCUPANCY DETECTION METHOD AND SYSTEM FOR IMPLEMENTING THE SAME

Kazuhiko Hashimoto, Moriguchi; Nobuyuki Yoshiike, Ikoma, and Katsuya Morinaka, Toyonaka, all of Japan, assignors to Matsushita Electric Industrial Co., Ltd., Osaka, Japan

Filed Dec. 8, 1995, Ser. No. 569,715

Claims priority, application Japan, Dec. 9, 1994, 6-306306

Int. Cl.⁶ G01J *5/02*

U.S. Cl. 250—342 **40 Claims**

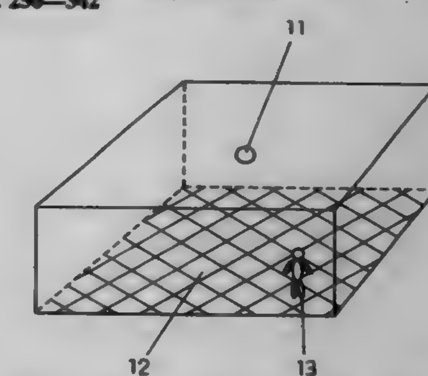

1. A human occupancy detection method, wherein within a designated space a region containing at least a human is detected using an infrared sensor, a proportion that a detected object occupies in said space is calculated, and based on a result of the calculation, a ratio of human occupancy in said space is estimated.

5,703,368

PASSIVE-TYPE INFRARED SENSOR SYSTEM FOR DETECTING HUMAN BODY

Hiroyuki Tomooka, and Tadashi Sugimoto, both of Otsu, Japan, assignors to Optex Co., Ltd., Shiga, Japan

Filed May 30, 1996, Ser. No. 658,878

Claims priority, application Japan, Oct. 4, 1995, 7-284587

Int. Cl.⁶ G08B *13/19*

U.S. Cl. 250—349 **6 Claims**

1. A passive-type infrared sensor system for detecting a human body, which comprises:

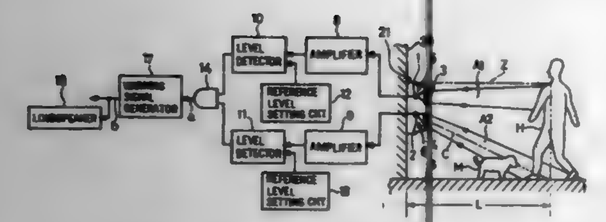

first and second sensor units each including a light receiving element for outputting an electric output signal proportional to an amount of change of infrared energies incident upon the light receiving element, and an optical system for collecting and guiding the infrared light from a predetermined watch area onto the light receiving element;

said first sensor unit being so disposed as to define a first watch area clear of a ground surface and oriented towards an upper half of the human body whereas said second sensor unit is so disposed as to define a second watch area below the first watch area and oriented towards a point on the ground surface spaced a predetermined watch distance away from the site where the second sensor unit is located;

first and second level detecting circuits each operable to output a detection signal only when the electric output signals generated from the light receiving elements of the respective first and second sensor units exceed a predetermined level; and

a human detecting circuit for outputting a human detection signal only when the detection signals are outputted respectively from the level detecting circuits, wherein each of the first and second level detecting circuits outputs one at a time a detection signal and a non-detection signal which are binary signals, and said human detecting circuit comprises an AND gate circuit operable in response to receipt of the binary signals.

5,703,369

POSITRON EMISSION COMPUTED TOMOGRAPHY APPARATUS AND IMAGE RECONSTRUCTION METHOD

Shinsuke Mori, Hamamatsu, Japan, assignor to Hamamatsu Photonics K.K., Hamamatsu, Japan

Filed Oct. 18, 1996, Ser. No. 733,575

Claims priority, application Japan, Oct. 20, 1995, 7-297816

Int. Cl.[6] G01T *1/164*

U.S. Cl. 250—363.03 **14 Claims**

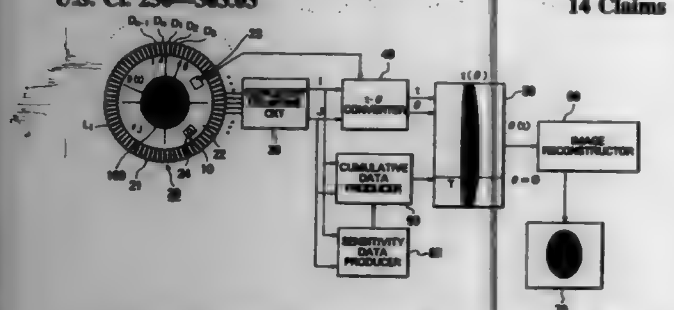

1. A positron emission computed tomography apparatus comprising:

a detector ring comprised of a plurality of photon detectors arranged in ring shape around a predetermined center axis to surround a measurement space, each said photon detector detecting a photon incident thereto from said measurement space to output a photon detection signal corresponding to energy of said photon;

a rotating mechanism for relatively rotating a calibration radiation source for emitting a positron to generate a photon pair with annihilation of electron-positron pair, relative to said detector ring about the center axis of said detector ring in said measurement space;

a position-direction measuring section for measuring position and direction of an object set in said measurement space, relative to said detector ring, and outputting position-direction data corresponding to the position and direction of said object;

a coincidence counting circuit for performing energy discrimination to determine if photons detected by said detector ring are a photon pair generated with annihilation of electron-positron pair in said measurement space, based on said photon detection signals received from said detector ring, and outputting a detector pair identification signal corresponding to a photon detector pair of said detector ring each having detected the two photons constituting said photon pair;

a sensitivity data producing section for counting events of detection of photon pair for every photon detector pair of said detector ring each having detected the two photons constituting said photon pair, based on said detector pair identification signal received from said coincidence counting circuit, while without setting said object in said measurement space said rotating mechanism rotates said calibration radiation source relative to said detector ring, and producing and storing sensitivity data corresponding to photon pair detection frequencies for all photon detector pairs of said detector ring;

a cumulative data producing section for producing cumulative data having values inversely proportional to values of said sensitivity data taken out from said sensitivity data producing section and, with setting said object in said measurement space, outputting said cumulative data corresponding to the photon detector pair of said detector ring each having detected the two photons constituting said photon pair, based on said detector pair identification signal received from said coincidence counting circuit;

coordinate converting means for converting, based on said detector pair identification signal received from said coincidence counting circuit, distance and direction of a detector line being a straight line connecting the photon detector pair of said detector ring each having detected the two photons constituting said photon pair into coordinate values expressed by predetermined polar coordinates set in said measurement space, compensating the coordinate values of said detector line in correspondence to the position and direction of said object, based on said position-direction data received from said position-direction measuring section, and outputting coordinate data corresponding to the coordinate values of said detector line;

a projection data accumulating section for cumulating said cumulative data received from said cumulative data producing section at an address of a memory space corresponding to the coordinate values of said detector line, based on said coordinate data received from said coordinate converting means, and accumulating said cumulative data distributed in said memory space, as projection data; and

an image reconstructing section for calculating a spatial distribution of photon pair occurrence frequencies with annihilation of electron-positron pair in said object, based on said projection data taken out of said projection data accumulating section, and producing reconstructed image data corresponding to said spatial distribution of photon pair occurrence frequencies.

5,703,370

METHOD AND APPARATUS FOR MEASURING ANGULAR DIFFERENTIAL DOSE OF IONIZING RADIATION

Stanley Kronenberg, Skillman, and George J. Brucker, West Long Beach, both of N.J., assignors to The United States of America as represented by the Secretary of the Army, Washington, D.C.

Filed Mar. 18, 1997, Ser. No. 816,821

Int. Cl.[6] G01T *1/02;1/14*

U.S. Cl. 250—376 **16 Claims**

1. A directional dosimeter comprising:

an electrometer dosimeter disposed within an ionization chamber, the ionization chamber comprising a housing wherein the

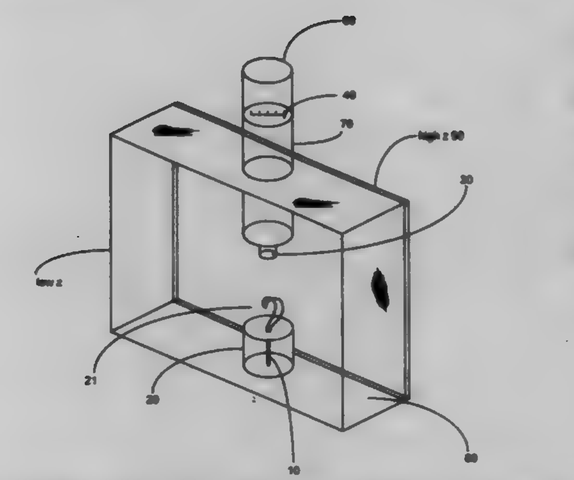

housing is lined with a high atomic material on one major surface thereof and wherein the housing is lined with a low atomic material on an opposing major surface thereof.

5,703,371

MODIFIED NOTCHED ENERGY FILTER NEUTRON RADIOGRAPHY CAMERA FOR NON-DESTRUCTIVE DETERMINATION OF HYDROGEN CONTENT OF IRRADIATED BWR FUEL ELEMENTS

David Michael Farkas, Benicia, and Daniel Reese Lutz, San Jose, both of Calif., assignors to General Electric Company, Schenectady, N.Y.

Filed Aug. 12, 1996, Ser. No. 689,565

Int. Cl.[6] G01N *23/204;23/202*

U.S. Cl. 250—390.02 **21 Claims**

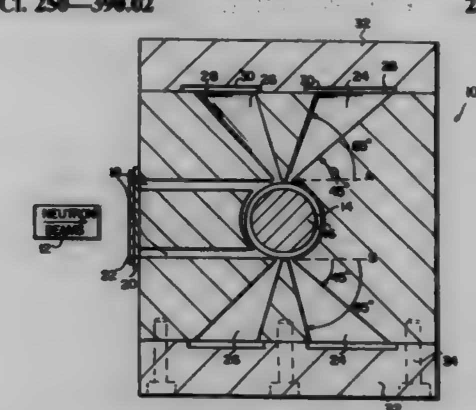

1. A neutron radiography camera operating in cooperation with a neutron beam source for determining hydrogen content of irradiated BWR fuel elements, the camera comprising:

a base unit including a central elongated channel shaped to receive a BWR fuel element;

an incident neutron beam port formed in said base unit, said incident neutron beam port being tangentially aligned with said central elongated channel;

a filter assembly disposed between the neutron beam source and said incident neutron beam port, said filter assembly selectively filtering the neutron beam to remove certain energy levels; and

an absorber plate disposed in a scattered neutron path.

5,703,372

ENDCAP FOR INDIRECTLY HEATED CATHODE OF ION SOURCE

Thomas N. Horsky, Boxborough; William E. Reynolds, Topsfield, and Richard M. Cloutier, Salisbury, all of Mass., assignors to Eaton Corporation, Cleveland, Ohio

Continuation-in-part of Ser. No. 740,478, Oct. 30, 1996. This application Dec. 31, 1996, Ser. No. 775,145

Int. Cl.[6] H01J *37/08*

U.S. Cl. 250—423 R **24 Claims**

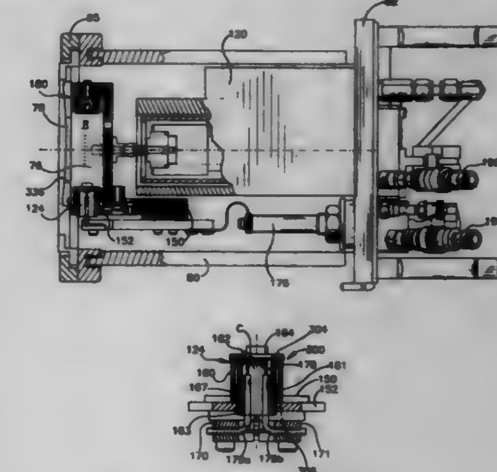

1. An ion source for use in an ion implanter, said ion source comprising:

a) a confinement chamber having chamber walls that bound an ionization region and including an exit opening to allow ions to exit the confinement chamber;

b) means for delivering an ionizable material into the confinement chamber;

c) structure for supporting the confinement chamber in a position for forming an ion beam from the confinement chamber;

d) a cathode positioned with respect to the ionization region of the confinement chamber to emit ionizing electrons into the ionization region of the confinement chamber to produce ions within the ionization region, the cathode including a heat source positioned in an electrically isolated cathode body, the cathode body including a first tube and an endcap supported in a distal end of the first tube adjacent the heating source, the endcap emitting said ionizing electrons into the ionization region of the gas confinement chamber when heated by the heat source; and

e) the endcap including a first end and a second end spaced apart from said first end by a body portion and having a radially projecting support extending outwardly from the body portion which contacts an inner surface of the first tube to support the endcap within the distal end of the first tube, the radially projecting support having a thickness in an axial direction less than a thickness in an axial direction of the body portion.

5,703,373

ALIGNMENT FIDUCIAL FOR IMPROVING PATTERNING PLACEMENT ACCURACY IN E-BEAM MASKS FOR X-RAY LITHOGRAPHY

Martin C. Peckerar, Silver Spring, and Christie Marrian, Marbury, both of Md., assignors to The United States of America as represented by the Secretary of the Navy, Washington, D.C.

Filed Nov. 3, 1995, Ser. No. 552,651

Int. Cl.[6] H01J *37/30*

U.S. Cl. 250—491.1 **18 Claims**

13. A method for monitoring the travel of an electron beam on a substrate, in an area wherein said beam can create a useful image on said substrate with submicron precision, said electron beam generated by an electron beam source, comprising:

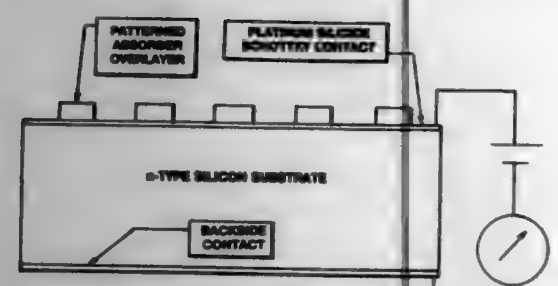

positioning a fiducial electron beam detector comprising a fiducial pattern relative to said substrate, so that said fiducial pattern is adjacent and parallel to an area on said substrate where said beam can create useful image with submicron precision, opposing said electron beam source, wherein said fiducial electron beam detector comprises means for directly detecting primary electrons from said electron beam;

exposing said substrate to said beam, wherein the dose delivered by said electron beam is sufficiently high to generate a detected signal in said means for directly detecting primary electrons from said electron beam, said signal being representative of the relative fiducial pattern and said travel, and wherein the dose delivered by said electron beam is less than a dose required to create a useful image on said substrate, and is thereby sufficiently low to prevent fogging in said substrate; and

comparing said detected signal with a predetermined signal to provide a position signal representative of the beam travel with submicron precision.

5,703,374
TELECENTRIC NUV-DUV IRRADIATOR FOR OUT-OF-CONTACT EXPOSURE OF LARGE SUBSTRATES
Fausto Caprari, East Brunswick, N.J., assignor to Actinic Systems, Inc., East Brunswick, N.J.
Filed Aug. 8, 1996, Ser. No. 694,107
Int. Cl.⁶ G21K *5/04*
U.S. Cl. 250—492.2 **30 Claims**

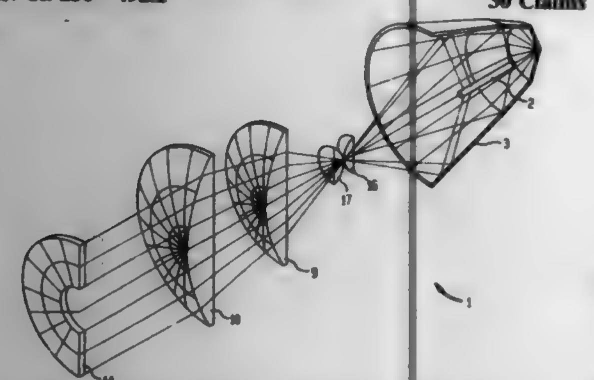

1. An optical system having a reflector for reradiating ultraviolet energy emitted by a mercury lamp as a radiation beam to a condenser lens assembly which directs the radiation beam through an entrance pupil lens and a collimation lens onto an intended plane distal from said mercury lamp, said system comprising:

said mercury lamp operating under a predetermined pressure and being an elongated arc having a length to width ratio greater than 2;

said reflector being a paraboloidal reflector responsive to said ultraviolet energy emitted by said mercury lamp to provide a converging radiation beam; and

said condenser lens assembly responsive to said converging radiation beam to provide an effective circular source which operates as a telecentric stop of said optical system.

5,703,375
METHOD AND APPARATUS FOR ION BEAM NEUTRALIZATION
Jiong Chen, Beverly, and Victor M. Benveniste, Gloucester, both of Mass., assignors to Eaton Corporation, Cleveland, Ohio
Filed Aug. 2, 1996, Ser. No. 691,467
Int. Cl.⁶ H01J *37/317;* **H01L** *21/265*
U.S. Cl. 250—492.21 **22 Claims**

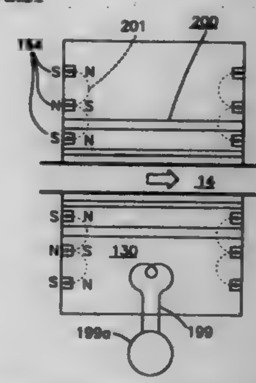

1. An ion implanter for treating one or more workpieces with positively charged ions comprising:

a) an ion source for emitting positively charged ions from a source location;

b) structure for forming an ion beam from the positively charged ions exiting the source;

c) an ion treatment station for positioning the one or more workpieces to intercept the ions in the ion beam as they enter the ion treatment station;

d) an ion beam neutralizer positioned upstream along the ion beam path from the treatment station of the one or more workpieces, said beam neutralizer comprising:

i.) confinement structure bounding the ion beam path that defines an entrance plate and an exit plate to allow the ion beam to pass through a neutralization region before striking the one or more workpieces at the treatment station;

ii.) an electron source for providing electrons within the neutralization region as the ion beam passes through the confinement structure; and

iii.) an array of magnets supported by the confinement structure for setting up a magnetic field in the neutralization region that tends to confine electrons from the electron source within the confinement structure.

5,703,376
MULTI-LEVEL RESOLUTION LITHOGRAPHY
John V. Jensen, Fremont, Calif., assignor to LSI Logic Corporation, Milpitas, Calif.
Filed Jun. 5, 1996, Ser. No. 655,249
Int. Cl.⁶ H01J *37/302*
U.S. Cl. 250—492.22 **16 Claims**

1. A method for lithographic rastering of an image, defined by an array of pixels, onto an image-accepting substrate, the method comprising the steps of:

decomposing an image, defined by an array of image pixels that are spaced apart from each other, into a collection of one or more isolated arrays of pixels that together form the image, where an array has a nearest neighbor pixel-to-pixel distance d_{nn};

decomposing each isolated pixel array into a first pixel assembly and a second pixel assembly, where the first pixel assembly contains only image pixels that are within a distance $P.d_{nn}$ of a boundary of the isolated pixel array, where P is a selected positive integer, and the second pixel assembly contains all image pixels not in the first pixel assembly;

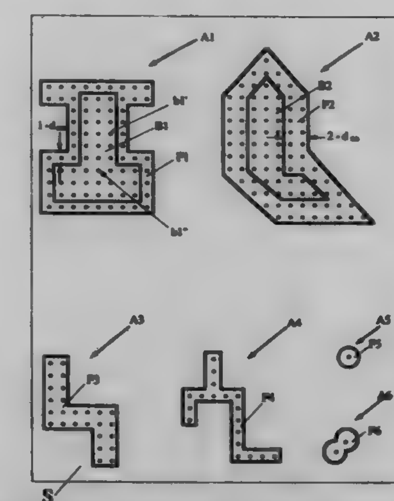

irradiating the pixels contained in the first pixel assembly with a first irradiation beam that has a selected beam width of $N1.d_{nn}$, where N1 is a selected integer satisfying $1 \leqq N1 \leqq P$; and

irradiating the pixels contained in the second pixel assembly with a second irradiation beam that irradiates at least N2 contiguous pixels, where N2 is a selected integer $\geqq 2$.

5,703,377
APPARATUS FOR THE INSPECTION OF CYLINDRICAL OBJECTS HAVING A BORESCOPE DEVICE
Adam Kenneth Ainsworth; Reginald Paul Glenville, and Iain Alan McLean, all of Preston, United Kingdom, assignors to British Nuclear Fuels plc, Cheshire, United Kingdom
Division of Ser. No. 125,641, Sep. 15, 1993, Pat. No. 5,541,418.
This application Dec. 21, 1995, Ser. No. 576,035
Claims priority, application United Kingdom, Sep. 16, 1992, 9219550
Int. Cl.⁶ G01N *21/86*
U.S. Cl. 250—559.45 **5 Claims**

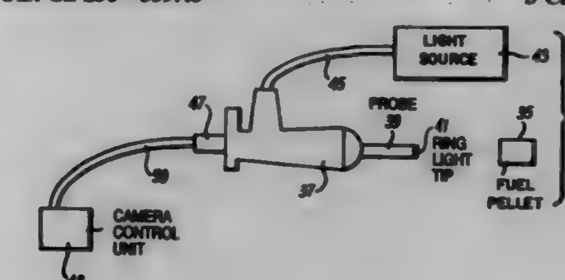

1. Apparatus for the inspection of the end surface of a cylindrical object including means for irradiating the end surface of the object, detector means for detecting radiation reflected by the end surface substantially parallel to the axis of the object and calculator means for calculating the proportion of the end surface which has reflected radiation directly to the detector means, wherein the means for irradiating comprises a ring source the center of the ring being substantially co-incident with the axis of the object and being substantially transparent to reflected radiation so that light reflected to the detector means passes unhindered through the ring, the ring source having associated therewith means permitting substantially uniform irradiation across said end surface, wherein the means for irradiating further comprises a borescope device having a probe or stem with fiber-optic ring provided at the end of the probe.

5,703,378
MATERIALS FOR THE SCAVANGING OF HYDROGEN AT HIGH TEMPERATURES
Timothy J. Shepodd, Livermore, Calif., and Bradley L. Phillip, Shaker Heights, Ohio, assignors to Sandia Corporation, Albuquerque, N. Mex.
Division of Ser. No. 424,775, Apr. 18, 1995, Pat. No. 5,624,598.
This application May 9, 1996, Ser. No. 647,093
Int. Cl.⁶ C09K *3/00*
U.S. Cl. 252—182.12 **10 Claims**

1. A system for removing hydrogen from an enclosed volume comprising:

a) an enclosed volume;

b) a hydrogen getter within the volume, said hydrogen getter comprising an organic compound wherein said organic compound has the formula $R_x{\equiv}R'_y$, wherein x and y may be identical and are at least equal one and R and R' may be identical and are benzene, styrene, naphthalene, anthracene, biphenyl, fluorene, phenanthrene, pyrene, or alkyl substituted derivatives or polymers thereof; and

c) a catalyst, combined with the getter, for catalyzing the reaction between said organic compound and hydrogen.

5,703,379
LIGHT-CONTROLLED SEMICONDUCTOR HETEROSTRUCTURE COMPONENT FOR GENERATING OSCILLATION AT MICROWAVE FREQUENCIES
Henri Le Person, Arcueil; Christophe Minot, Paris, and Jean-François Palmier, Fontenay Aux Roses, all of France, assignors to France Telecom, France
Filed Apr. 27, 1995, Ser. No. 429,835
Claims priority, application France, Apr. 28, 1994, 94 05157
Int. Cl.⁶ H01L *29/205;31/107;27/26*
U.S. Cl. 257—21 **3 Claims**

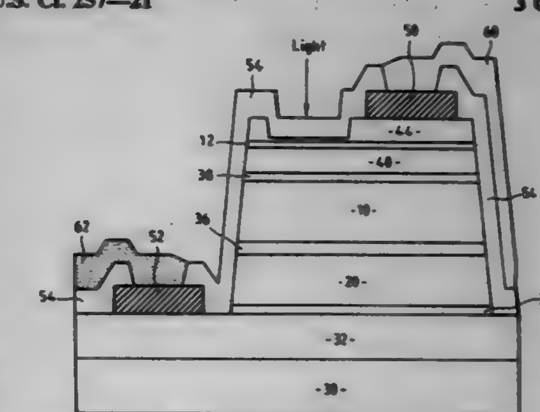

1. An optically controlled oscillator comprising the following layers successively epitaxially deposited on a semi-insulating substrate:

a doped layer serving to make electrical contact;

a doped graded layer;

a superlattice exhibiting for majority carriers a relationship of velocity as a function of electric field that presents a region of negative slope;
a non-doped graded layer;
a layer including light absorbing material for creating electron-hole pairs;
a doped graded layer;
a window-forming layer that is transparent at the exciting wavelength;
a doped graded layer; and
a doped layer,
so that said oscillator generates a train of microwave oscillations following reception on said light absorbing material of a low energy light pulse.

5,703,380
LAMINAR COMPOSITE LATERAL FIELD-EMISSION CATHODE
Michael D. Potter, Grand Isle, Vt., assignor to Advanced Vision Technologies Inc., Rochester, N.Y.
Filed Jun. 13, 1995, Ser. No. 490,061
Int. Cl.^{6} H01L *29/06;* **H01J** *1/46*
U.S. Cl. 257—10 **41 Claims**

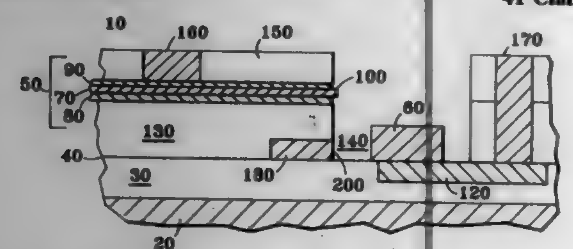

1. A microelectronic device of the type using a cold-cathode field-emission electron source, comprising:
a) a substrate having a substrate upper surface defining a first plane;
b) an anode;
c) a composite lateral field-emission electron emitter spaced apart from said anode by a first predetermined distance and disposed on a second plane parallel to said first plane, said composite lateral field-emission electron emitter comprising:
i) a first conductive film having an upper major surface disposed substantially parallel to said second plane, and
ii) a second conductive film disposed in contact with said upper major surface of said first conductive film, one of said first and second conductive films comprising a carbon film, said first and second conductive films being characterized by having differing etch rates to an etchant, whereby one of said first and second conductive films may be differentially etched from a portion of the other to remove at least an edge portion of said one of said first and second conductive films, while leaving at least a salient edge portion of the other to form an emitting tip;
d) a first conductive contact connected to said first conductive film of said electron emitter to provide a cathode contact;
e) a second conductive contact spaced apart from said first conductive contact and connected to said anode to provide an anode contact, whereby said device may have an electrical bias voltage applied; and
f) means for applying said electrical bias voltage.

5,703,381
SEMICONDUCTOR INTEGRATED CIRCUIT
Kiyoaki Iwasa, Tokyo, and Shigeo Ohshima, Yokohama, both of Japan, assignors to Kabushiki Kaisha Toshiba, Kawasaki, Japan
Filed Nov. 13, 1995, Ser. No. 557,731
Claims priority, application Japan, Nov. 18, 1994, 6-285361
Int. Cl.^{6} H01L *23/58*
U.S. Cl. 257—48 **11 Claims**

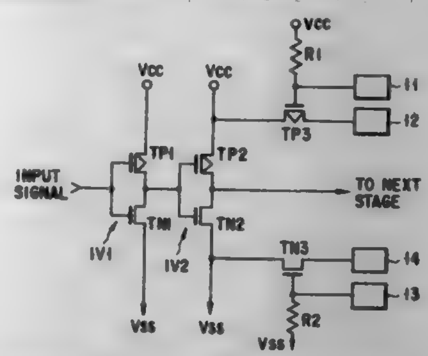

1. A semiconductor integrated circuit comprising:
a rectangular semiconductor chip having a main surface;
a plurality of pads formed in a peripheral portion of the main surface of said semiconductor chip, for connection to external connecting members;
a plurality of circuit elements of an integrated circuit formed in an area of the main surface other than the peripheral portion in which said plurality of pads are formed; and
at least two characteristic evaluating circuit elements including at least one PMOS transistor and at least one NMOS transistor, said at least one PMOS transistor sharing an impurity doped region as a source/drain region with said PMOS transistor of said integrated circuit and said NMOS transistor sharing an impurity doped region as a source/drain region with said NMOS transistor of said integrated circuit, said at least two characteristic evaluating circuit elements being located in an area of the main surface other than the peripheral portion in which said plurality of pads are formed.

5,703,382
ARRAY HAVING MULTIPLE CHANNEL STRUCTURES WITH CONTINUOUSLY DOPED INTERCHANNEL REGIONS
Michael G. Hack, Mountain View, and I-Wei Wu, Los Altos, both of Calif., assignors to Xerox Corporation, Stamford, Conn.
Filed Nov. 20, 1995, Ser. No. 559,862
Int. Cl.^{6} A01L *29/04;* **G02F** *1/1343*
U.S. Cl. 257—72 **27 Claims**

1. A display comprising:
a two-dimensional M×N array comprising:
M scan lines;
N data lines; and
for each of a set of pairs of values (m, n), cell circuitry connected to the mth scan line and the nth data line; the cell circuitry comprising:
a capacitive element having a data lead for receiving signals from the nth data line; during operation of the array circuitry, the capacitive element storing a level of charge within one of two or more distinct voltage bands for a storage period; the voltage level indicating one of a set of two or more values; and
a polysilicon thin film transistor (poly-Si TFT) for electrically connecting the data lead to the nth data line under control of the mth scan line: the poly-Si TFT comprising: first and second channels electrically connected in series between the nth data line and the data lead; the first and second channels each being conductive; the first and second channels having dopant particles at a first average

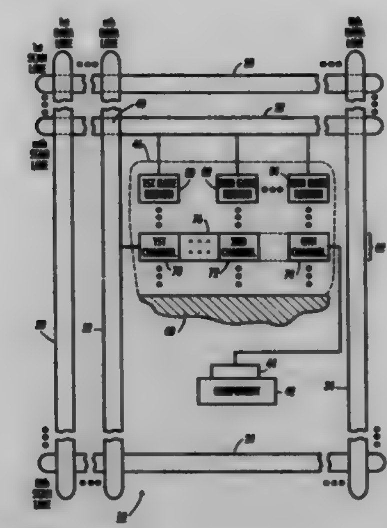

dopant density;
first and second gates electrically connected to the mth scan line; the first gate extending across the first channel; the second gate extending across the second channel; and
between the first and second channels, an intrachannel region that has a continuous distribution of dopant particles; the continuous distribution being a second average dopant density, the second average dopant density being less than the first average dopant density.

5,703,383
POWER SEMICONDUCTOR DEVICE
Kazuya Nakayama, Sagamihara, Japan, assignor to Kabushiki Kaisha Toshiba, Kawasaki, Japan
Filed Apr. 8, 1996, Ser. No. 629,222
Claims priority, application Japan, Apr. 11, 1995, 7-085506
Int. Cl.^{6} H01L *29/74;29/76;29/94*
U.S. Cl. 257—139 **21 Claims**

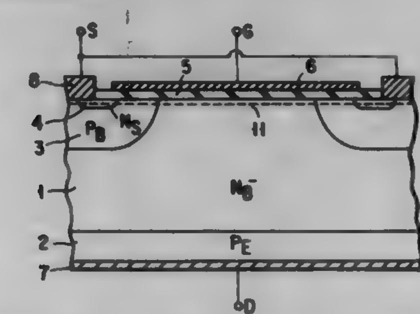

1. A power semiconductor device having a plurality of circuit elements arranged side by side, each circuit element comprising:
an emitter layer of a first conductivity type;
a base layer of a second conductivity type arranged on said emitter layer;
a base layer of the first conductivity type formed in a surface of said base layer of the second conductivity type;
a source layer of the second conductivity type formed in a surface of said base layer of the first conductivity type;
a gate insulating film formed over at least the base layer of the first conductivity type located between the source layer of the second conductivity type and the base layer of the second conductivity type;
a gate electrode portion arranged on the gate insulating film extending over at least the base layer of the first conductivity type located between said source layer of the second conductivity type and said base layer of the second conductivity type;
a source electrode portion arranged to be in contact with both said source layer of the second conductivity type and said base layer of the first conductivity type;
a drain electrode portion arranged to be in contact with said emitter layer of the first conductivity type; and
wherein each said gate electrode portion of at least an adjacent first pair of two of said circuit elements together comprise an integral gate electrode satisfying conditions of 60 μm$\leqq L_G/L_S$ and $1\leqq L_G^2/(D_B \cdot W_B)\leqq 9$, where L_G denotes a width of said integral gate electrode, D_B denotes a depth of said base layer of the first conductivity type, W_B denotes a thickness of said base layer of the second conductivity type which is located between said base layer of the first conductivity type and said emitter layer of the first conductivity type, and L_S denotes a distance between one integral gate electrode and an adjacent integral gate electrode.

5,703,384
MOS SEMICONDUCTOR COMPONENT HAVING IMPROVED TRANSMISSION PROPERTIES
Heinrich Brunner, Munich, Germany, assignor to Siemens Aktiengesellschaft, Munich, Germany
Filed May 14, 1996, Ser. No. 645,505
Claims priority, application Germany, Jun. 19, 1995, 194 22 161.3
Int. Cl.^{6} H01L *29/80;29/76;29/94;29/00*
U.S. Cl. 257—139 **9 Claims**

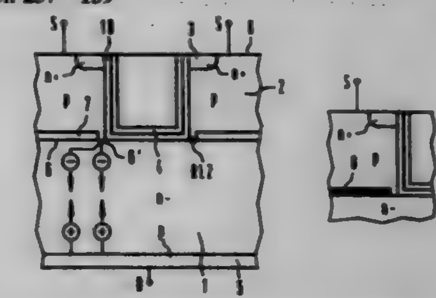

1. An MOS semiconductor component, comprising:
a source zone of a first conductivity type, a base zone of a second conductivity type that are both connected in common to a source terminal, the source zone and the base zone having a common pn-junction;
a base zone of the first conductivity type that has a pn-junction with the base zone of the second conductivity type; and
a gate electrode that is separated from the base zone of the first conductivity type and from the base zone of the second conductivity type only by an oxide layer, the base zone of the first conductivity type being separated from the base zone of the second conductivity type by an insulating layer such that a junction between the base zones of the first and second conductivity types is present only in an immediate proximity of the oxide layer.

5,703,385
POWER INTEGRATED CIRCUIT ("PIC") STRUCTURE WITH A VERTICAL IGBT
Raffaele Zambrano, San Giovanni la Punta, Italy, assignor to Consorzio per la Ricerca sulla Microelettronica nel Mezzogiorno, Catania, Italy
Filed May 17, 1995, Ser. No. 443,908
Claims priority, application European Pat. Off., May 19, 1994, 94830230
Int. Cl.^{6} H01L *31/0328;23/58;29/76*
U.S. Cl. 257—212 **11 Claims**

1. A PIC structure comprising a lightly doped semiconductor layer of the first conductivity type superimposed over a heavily doped semiconductor substrate of a second conductivity type, wherein a Vertical IGBT and a driving and control circuit are integrated, the Vertical IGBT comprising a plurality of elementary cells, each elementary cell comprising at least heavily doped deep body regions of the second conductivity type and body regions of

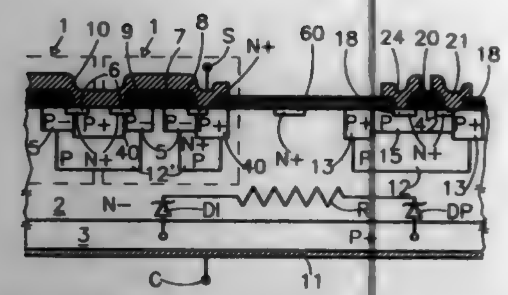

the second conductivity type extending from a top surface of the lightly doped layer thereinto, and the driving and control circuit comprising at least first conductivity type-channel MOSFETs formed inside well regions of the second conductivity type which are included in at lease one isolated lightly doped region of the first conductivity type completely surrounded and isolated from the lightly doped layer of the first conductivity type by means of a respective isolation region of a second conductivity type comprising a first, buried region of the second conductivity type, and a second, heavily doped annular region of the second conductivity type extending from a top surface of the lightly doped layer to said buried region, laterally delimiting said isolated lightly doped region of the first conductivity type, wherein said annular region and said deep body regions have substantially a same depth with respect to the top surface of the lightly doped semiconductor layer.

5,703,386
SOLID-STATE IMAGE SENSING DEVICE AND ITS DRIVING METHOD
Minoru Yasuda, and Yasuhito Maki, both of Kanagawa, Japan, assignors to Sony Corporation, Tokyo, Japan
Filed Mar. 14, 1996, Ser. No. 615,781
Claims priority, application Japan, Mar. 15, 1995, 7-055294
Int. Cl.[6] H01L *27/148;29/768*
U.S. Cl. 257—230 **7 Claims**

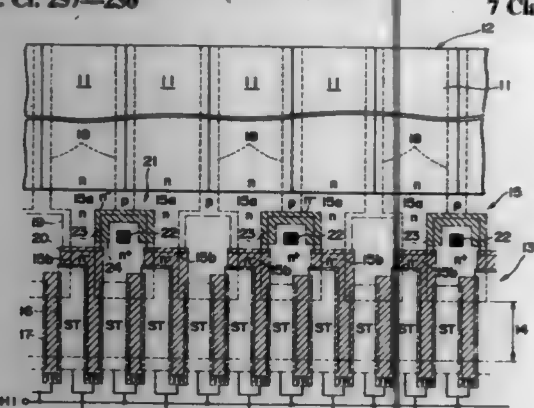

1. A solid-state image sensing device comprising:
a plurality of photoelectric conversion elements generating electric charges;
an electric-charge transferring unit for transferring said electric charges, said electric-charge transferring unit having a transfer gate electrode which receives a transfer gate pulse;
a plurality of read gates provided between said photoelectric conversion elements and said electric-charge transferring unit;
each of said read gates comprising a read gate electrode having a portion arranged adjacent to said photoelectric conversion elements and an extending portion extending from said electric-charge transferring unit to said portion arranged adjacent to said photoelectric conversion elements, wherein said electric charges can be transferred from said photoelectric conversion elements to said electric-charge transferring unit under the control of only two gate pulses; and
an electric-charge exhausting unit provided for each pair of said photoelectric conversion elements and between said photoelectric conversion elements and said electric-charge transferring unit.
wherein said read gate comprises a first region created at a location adjacent to said photoelectric conversion elements and a second region created at a location adjacent to said electric-charge transferring unit, and said electric-charge exhausting unit is provided at a location in contact with said first region, and
wherein said electric-charge transferring unit comprises a store region having a store gate electrode and a transfer region having said transfer gate electrode arranged alternately in an electric-charge transferring direction.

5,703,387
SPLIT GATE MEMORY CELL WITH VERTICAL FLOATING GATE
Gary Hong, Hsin-Chu, Taiwan, assignor to United Microelectronics Corp., Hsin-Chu, Taiwan
Filed Sep. 30, 1994, Ser. No. 316,137
Int. Cl.[6] G11C *13/00*
U.S. Cl. 257—315 **11 Claims**

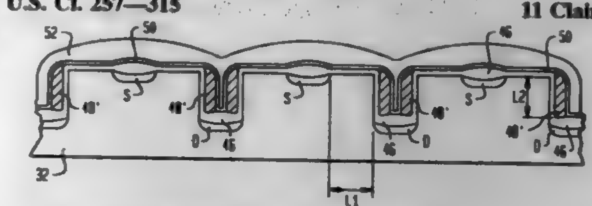

1. A split gate memory device, comprising:
a) a semiconductor substrate of a first conductivity type having a surface and a trench having a bottom surface, sidewalls, and top formed therein;
b) a first heavily doped region of semiconductor material formed in the substrate surface having a second conductivity type opposite to said first conductivity type;
c) a second heavily doped region of semiconductor material formed in said substrate at the bottom surface of said trench and having the second conductivity type, the second region configured to form part of a bitline, each of said first and second regions forming either one of a drain and a source;
d) a floating gate formed on a sidewall of the trench; and
e) a control gate formed generally perpendicular to the floating gate and above the substrate surface and above and across the top of the trench.

5,703,388
DOUBLE-POLY MONOS FLASH EEPROM CELL
Chih-Hsien Wang; Min-Liang Chen, both of Hsin-Chu, and Thomas Chang, Taichung, all of Taiwan, assignors to Mosel Vitelic Inc., Hsinchu, Taiwan
Filed Jul. 19, 1996, Ser. No. 684,517
Int. Cl.[6] H01L *29/788;29/76*
U.S. Cl. 257—315 **6 Claims**

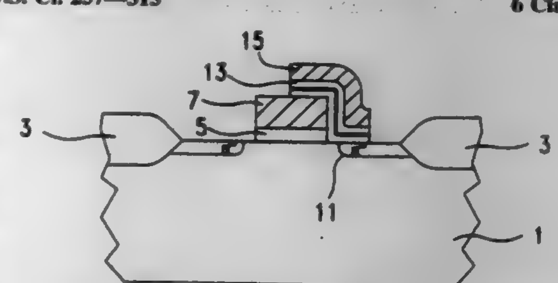

1. A double-poly MONOS EEPROM formed on a semiconductor substrate, said EEPROM comprising:

a source formed in said substrate;
a drain formed in said substrate;
a gate oxide layer formed on said semiconductor substrate adjacent to said source and drain, said gate oxide layer being spaced apart from said drain by a first spacing width, said gate oxide layer being spaced apart from said source by a second spacing width;
a select gate formed on said gate oxide layer;
a dielectric layer formed on a portion of said select gate, a portion of said drain, and said first spacing width, said second spacing width being exposed by said select gate and said dielectric layer, said dielectric layer used to store carriers, said carriers tunneling into said dielectric layer via said first spacing width in a programming mode, wherein said select gate is used for conserving power in an erase mode; and
a control gate formed on said dielectric layer.

5,703,389
VERTICAL IGFET CONFIGURATION HAVING LOW ON-RESISTANCE AND METHOD
Lynnita K. Knoch, Chandler, and Pak Tam, Tempe, both of Ariz., assignors to Motorola, Inc., Schaumburg, Ill.
Filed Feb. 24, 1995, Ser. No. 393,772
Int. Cl.[6] H01L *29/76;31/062*
U.S. Cl. 257—327 **17 Claims**

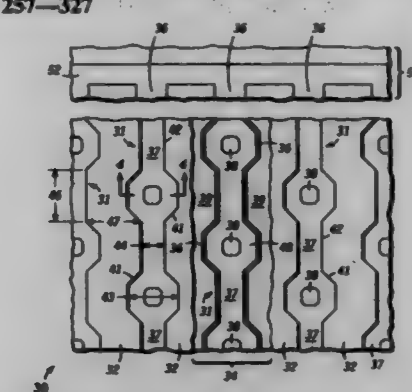

1. A vertical IGFET configuration having low on-resistance comprising a plurality of stripes formed on one surface of a semiconductor substrate and a drain electrode formed on an opposite surface of the semiconductor substrate, the plurality of stripes extending into the semiconductor substrate and having a non-linear shape that increases channel density thereby providing the low on-resistance, wherein each of the plurality of stripes includes a source region within a base region, and wherein the plurality of stripes is coupled together to form a single base configuration.

5,703,390
SEMICONDUCTOR DEVICE HAVING FOUR POWER MOSFETS CONSTITUTING H BRIDGE CIRCUIT
Yukio Itoh, Tokyo, Japan, assignor to NEC Corporation, Tokyo, Japan
Filed Oct. 31, 1995, Ser. No. 550,863
Claims priority, application Japan, Oct. 31, 1994, 6-290427
Int. Cl.[6] H01L *29/76;29/94;31/062*
U.S. Cl. 257—337 **7 Claims**

1. A semiconductor device comprising:
first, second, third and fourth MOSFETs formed in a semiconductor substrate;
drains of said first and second MOSFETs being coupled together;
sources of said third and fourth MOSFETs being coupled together;
a source of said first MOSFET being connected to a drain of said third MOSFET;
a source of said second MOSFET being connected to a drain of said fourth MOSFET; and

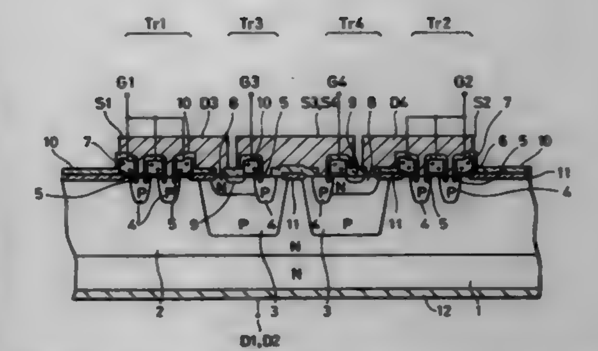

said first, second, third and fourth MOSFETs constituting an H bridge circuit;
wherein said first and second MOSFETS are different in structure from said third and fourth MOSFETs.

5,703,391
SEMICONDUCTOR DEVICE HAVING ELEMENT ISOLATING INSULATING FILM IN CONTACT HOLE
Satoshi Arima, Hyogo, Japan, assignor to Mitsubishi Denki Kabushiki Kaisha, Tokyo, Japan
Filed Jun. 27, 1996, Ser. No. 673,183
Int. Cl.[6] H01L *29/76;29/94;27/11*
U.S. Cl. 257—382 **5 Claims**

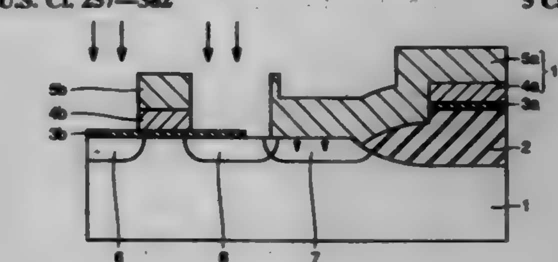

1. A semiconductor device, comprising:
a semiconductor substrate having a main surface;
an element isolation insulating film formed on the main surface of said semiconductor substrate;
a conductive layer formed in contact with the main surface of said semiconductor substrate over a contact portion and in contact with a surface of said element isolation insulating film; wherein
at least an upper surface of said element isolating insulating film at a boundary point between said element isolating insulating film and said semiconductor substrate has been removed to form a concavity below the main surface of the semiconductor substrate which concavity forms part of the contact portion; and
said conductive layer is formed on contact with said semiconductor substrate and said element isolating insulating film positioned near said boundary point, wherein a step is formed at a region of the upper surface of said element isolating insulating film positioned below a side surface of said first interconnection layer.

5,703,392
MINIMUM SIZE INTEGRATED CIRCUIT STATIC MEMORY CELL
Jeng-Jong Guo, 2F, No. 8, Alley 36, Hu-Bin 1st Road, Science-Based Industrial Park, Hsin-Chu, Taiwan
Filed Jun. 2, 1995, Ser. No. 460,035
Int. Cl.[6] H01L *29/76;29/94;31/062;31/113*
U.S. Cl. 257—392 **11 Claims**

1. A semiconductor static memory cell comprising:

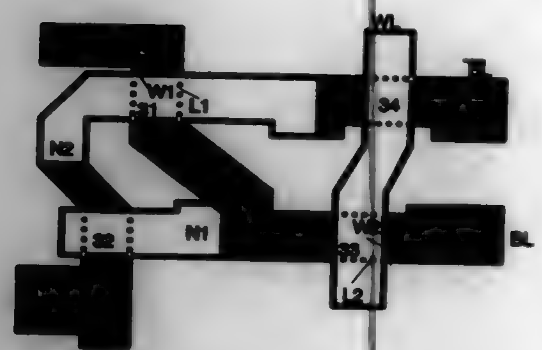

two cross-coupled inverters with a first inverter and a second inverter, each having a pull-up load device and a pull-down MOSFET with a drain, a source and a gate,
an output node of the first inverter of said cross-coupled inverters, where the drain of said pull-down MOSFET is connected to the load device, being coupled to the gate of the MOSFET of the second inverter of said cross-coupled inverters,
an output node of the second inverter of said cross-coupled inverters being coupled to the gate of the MOSFET of said first inverter,
a first MOSFET pass transistor having a gate connected to a word line, and two other electrodes, a source and a drain, connected between the output node of said first inverter and a bit line,
a second MOSFET pass transistor having a gate connected to said word line, and two other electrodes, a source and a drain, connected between the output node of said second inverter and a complementary bit line,
said first and second MOSFET pass transistors having a threshold voltage higher than said pull-down MOSFET, and
having a width-to-length ratio of the gate of the pull-down MOSFET less than 2.5 times the width-to-length ratio of the gate of the pass transistor.

5,703,393
SEMICONDUCTOR PRESSURE DETECTING DEVICE AND MANUFACTURING METHOD OF THE DEVICE
Yasuo Yamaguchi, Itami, Japan, assignor to Mitsubishi Denki Kabushiki Kaisha, Tokyo, Japan
Filed Oct. 16, 1995, Ser. No. 543,439
Claims priority, application Japan, Jun. 27, 1995, 7-160435
Int. Cl.⁶ H01L *29/82*
U.S. Cl. 257—419 **6 Claims**

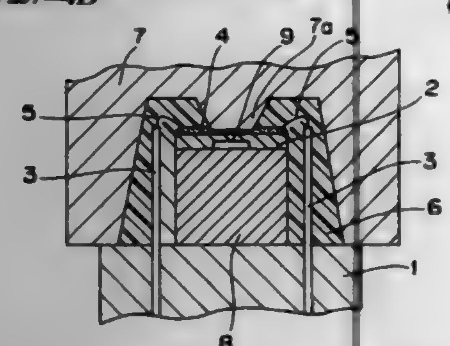

1. A semiconductor pressure detecting device comprising:
a semiconductor pressure sensing element including a diaphragm portion;
a pedestal supporting said semiconductor pressure sensing element;
at least one wire connected to said semiconductor pressure sensing element;
a molding resin adhesion prevention member including a silicone resin layer adhered on a whole outer surface of said semiconductor pressure sensing element so as to prevent molding resin from contacting said diaphragm portion during molding of said semiconductor pressure sensing element, said pedestal, and said at least one wire.

5,703,394
INTEGRATED ELECTRO-OPTICAL PACKAGE
Chengping Wei, Gilbert; Song Q. Shi, Phoenix, both of Ariz., and Hsing-Chung Lee, Calabasas, Calif., assignors to Motorola, Schaumburg, Ill.
Filed Jun. 10, 1996, Ser. No. 660,829
Int. Cl.⁶ H01L *31/0203;31/115;27/15;31/12*
U.S. Cl. 257—433 **19 Claims**

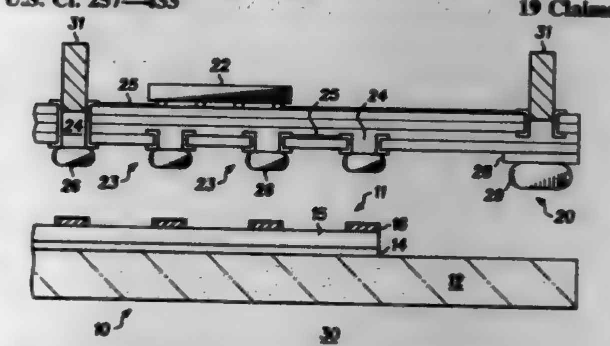

1. An integrated electro-optical package comprising:
a supporting substrate defining a plurality of pixels;
a printed circuit board containing thereon at least one driver and control circuit and having formed therein a plurality of plated through hole vias;
a conductive epoxy, positioned to directly interconnect the plurality of plated through hole vias to the plurality of pixels, thereby electrically interfacing the plurality of pixels formed on the supporting substrate with the at least one driver and control circuit; and
a sealant positioned to hermetically seal the supporting substrate about a perimeter, to the printed circuit board.

5,703,395
ELECTRONIC MEMORY DEVICE HAVING A NON-PERIPHERAL CONTACT FOR READING AND WRITING
Jean-Claude Berney, Les Charbonnières, Switzerland, assignor to Gay Freres S.A., Geneva, Switzerland
PCT No. PCT/CH95/00079, § 371 Date Dec. 5, 1995, § 102(e) Date Dec. 5, 1995, PCT Pub. No. WO95/28713, PCT Pub. Date Oct. 26, 1995
PCT Filed Apr. 7, 1995, Ser. No. 557,027
Claims priority, application Switzerland, Apr. 18, 1994, 1160/94
Int. Cl.⁶ H01L *23/02;23/22;23/04;23/34*
U.S. Cl. 257—681 **15 Claims**

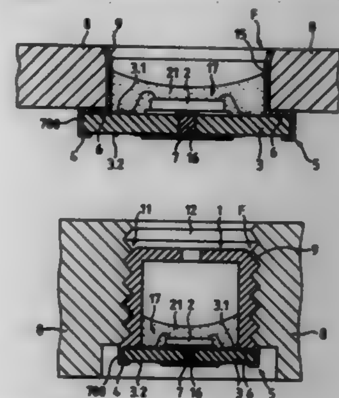

1. An electronic miniaturized memory device, comprising
at least one integrated memory circuit (2,20),
an interconnection interface (3) connected to said integrated memory circuit,

a case (1) surrounding and serving as a protective housing for an electronic subsystem (17), and
fixation means, selected from the group consisting of a screw and a rivet, for attaching said memory device to a support,
wherein said interconnection interface includes at least one peripheral contact (700) and a second, non-peripheral, contact (7,70), adapted for use in writing information to, and reading information from, the memory device, thereby allowing the memory device to document information concerning the specific support to which it is attached.

5,703,396
PLASTIC ENCAPSULATED SEMICONDUCTOR DEVICE HAVING WING LEADS
Kenichi Kurihara, Tokyo, Japan, assignor to NEC Corporation, Japan
Filed Oct. 31, 1996, Ser. No. 739,890
Claims priority, application Japan, Oct. 31, 1995, 7-283542
Int. Cl.⁶ H01L *23/12;23/50;23/02*
U.S. Cl. 257—692 **5 Claims**

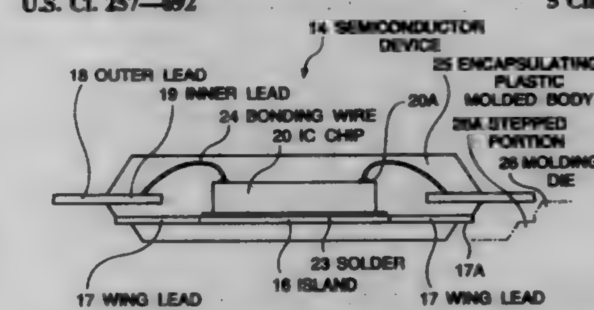

1. A plastic encapsulated semiconductor device comprising a semiconductor chip supported on an island, a plurality of terminal leads each having an inner lead and an outer lead, said inner lead of each terminal lead extending outwardly from a proximity of said island and being electrically connected to a corresponding electrode of said semiconductor chip through a connection wire, and at least one wing lead extending outwardly from said island between a pair of adjacent terminal leads of said terminal leads, and a plastic molded body encapsulating said semiconductor chip, said island, said inner lead of each terminal lead and said connection wire in such a manner that said outer lead of each terminal lead is projected from said plastic molded body and a tip end of said at least one wing lead is exposed from said plastic molded body so as to expel possible moisture contained in said plastic molded body, wherein said at least one wing lead extends outwardly from said plastic molded body in a plane different in level from a plane in which said terminal leads extend outwardly from said plastic molded body, so that said at least one wing lead does not interfere with said terminal leads, and also wherein said at least one wing lead extends in a direction toward a tie-bar for tying said terminal leads.

5,703,397
SEMICONDUCTOR PACKAGE HAVING AN ALUMINUM NITRIDE SUBSTRATE
Mitsuyoshi Endo, 25-23-3F Higashikashiwagaya 4-chome, Ebina-shi, Kanagawa-ken; Hironori Asai, 2469-6-625 Nagatsudacho, Midori-ku, Yokohama-shi, Kanagawa-ken; Keiichi Yano, 11-301, Daishihoncho 8-chome, Kawasaki-ku, Kawasaki-shi, Kanagawa-ken, and Yoshitoshi Sato, 33-19, Ayase 1-chome, Adachi-ku, Tokyo, all of Japan
Continuation of Ser. No. 982,542, Nov. 27, 1992, abandoned.
This application Nov. 8, 1996, Ser. No. 745,367
Claims priority, application Japan, Nov. 28, 1991, 3-314601; Nov. 29, 1991, 3-316999; May 20, 1992, 4-127280
Int. Cl.⁶ H01L *23/053;23/12*
U.S. Cl. 257—701 **14 Claims**

1. A semiconductor package, comprising an aluminum nitride substrate having a semiconductor element mounted on one surface thereof and a wiring pattern electrically connected to said semiconductor element, a multiplicity of connecting terminals electrically connected to said wiring pattern and disposed on the other surface of said aluminum nitride substrate, and a ceramic sealing member joined to said one surface of said aluminum nitride substrate at an area other than a region forming said wiring pattern, through the medium of a junction layer in such a manner as to seal said semiconductor element, said junction layer solely consisting of metal and having no insulating film.

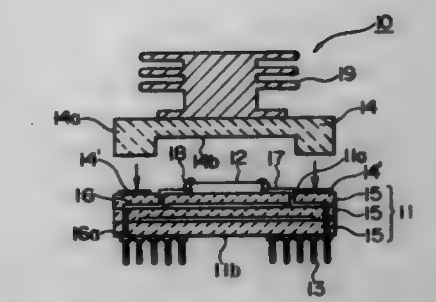

5,703,398
SEMICONDUCTOR INTEGRATED CIRCUIT DEVICE AND METHOD OF PRODUCING THE SEMICONDUCTOR INTEGRATED CIRCUIT DEVICE
Michio Sono; Kazuto Tsuji; Hideharu Sakoda; Yoshimi Suzuki, and Masao Sakuma, all of Kawasaki, Japan, assignors to Fujitsu Limited, Kawasaki, Japan
Continuation of Ser. No. 205,495, Mar. 4, 1994, abandoned.
This application Jun. 20, 1996, Ser. No. 667,326
Claims priority, application Japan, Mar. 17, 1993, 5-057542
Int. Cl.⁶ H01L *23/10;23/34*
U.S. Cl. 257—706 **15 Claims**

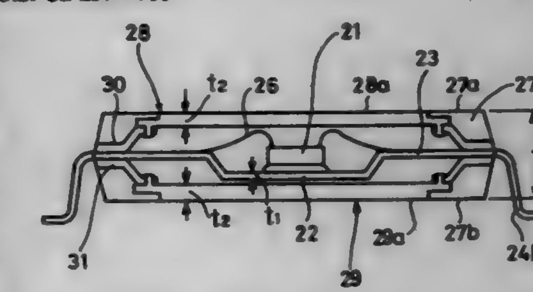

1. A semiconductor integrated circuit device comprising:
a semiconductor chip supported by a stage;
leads electrically connected to the semiconductor chip;
first and second heat radiating members provided on first and second sides of the semiconductor chip;
heat conducting supporting members, supporting the first and second heat radiating members away from the stage; and
a resin package body completely sealing the semiconductor chip and partially sealing the leads and the first and second heat radiating members.

5,703,399
SEMICONDUCTOR POWER MODULE
Gourab Majumdar; Tooru Iwagami, and Sukehisa Noda, all of Toyko, Japan, assignors to Mitsubishi Denki Kabushiki Kaisha, Tokyo, Japan
Filed May 15, 1996, Ser. No. 648,432
Claims priority, application Japan, Nov. 15, 1995, 7-296457
Int. Cl.⁶ H01L *23/34*
U.S. Cl. 257—723 **20 Claims**

1. A semiconductor power module incorporating circuits of a power circuit having a power semiconductor element and a control circuit for controlling the power semiconductor element, comprising:

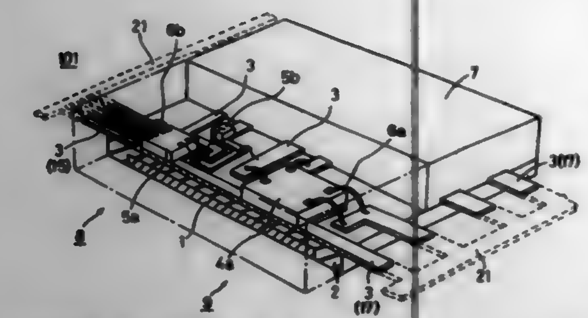

a lead frame having a first main surface and a second main surface, which forms an interconnection pattern having respective portions on which each of said power circuit and control circuit are formed and which includes external terminals for making electric connection to each of said power circuit and control circuit, wherein all of circuit elements of each of said power circuit and control circuit are respectively affixed on said first main surface;

a heat sink with thermal conductivity facing at least a first portion of said second main surface of said lead frame at which the power circuit is formed; and

a first sealing resin with an electric insulating property and thermal conductivity filling a gap between said lead frame and said heat sink to electrically insulate said lead frame and said heat sink from each other and fixedly couple said lead frame and said heat sink.

5,703,400

FABRICATION AND STRUCTURES OF TWO-SIDED MOLDED CIRCUIT MODULES WITH FLEXIBLE INTERCONNECT LAYERS

Robert John Wojnarowski, Ballston Lake, and Thomas Bert Gorczyca, Schenectady,, both of N.Y., assignors to General Electric Company, Schenectady, N.Y.

Division of Ser. No. 567,306, Dec. 4, 1995, Pat. No. 5,567,657. This application Jul. 22, 1996, Ser. No. 684,715

Int. Cl.^{6} H01L *23/34;23/06*

U.S. Cl. 257—723 **9 Claims**

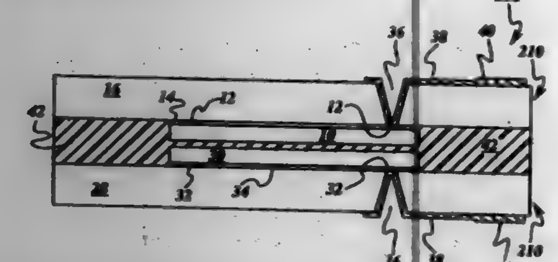

1. A two-sided molded circuit module with flexible interconnect layers, the module comprising:

first and second flexible interconnect structures, each flexible interconnect structure comprising a flexible interconnect layer having a chip surface and at least one chip with chip pads attached to the chip surface, the chip surface of the first flexible interconnect structure facing the chip surface of the second interconnect structure;

molding material between the chip surfaces of the flexible interconnect layers encapsulating each of the at least one chips;

vias in the flexible interconnect layers, at least some of the vias extending to selected chip pads;

a pattern of electrical conductors extending over the flexible interconnect layers and into the vias to couple selected ones of the chip pads.

5,703,401

MINIATURE SEMICONDUCTOR DEVICE FOR SURFACE MOUNTING

Peter W. M. van de Water; Roelf A. J. Groenhuis, and Cornelis G. Schriks, all of Nijmegen, Netherlands, assignors to U.S. Philips Corporation, New York, N.Y.

Filed May 10, 1996, Ser. No. 644,093

Claims priority, application European Pat. Off., May 10, 1995, 95201203

Int. Cl.^{6} H01L *23/34;23/48;23/52;23/02*

U.S. Cl. 257—727 **5 Claims**

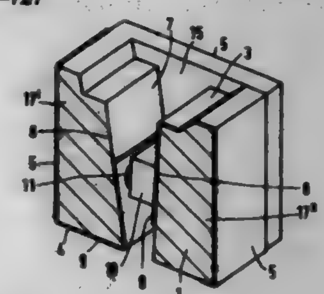

1. A semiconductor device for surface mounting, the semiconductor device being provided with a semiconductor element, the device comprising: a substrate carrier having a surface provided with a groove with walls on which conductor tracks are present, which conductor tracks continue onto the surface of the substrate carrier and form connection conductors of the device, the semiconductor element being arranged with its main surface parallel to a wall in said groove, and being in electrical contact with the conductor tracks on the wall, the groove being filled with a protective material, and the substrate carrier being provided with a side wall which mechanically interconnects and supports mutually opposed walls of the groove.

5,703,402

OUTPUT MAPPING OF DIE PAD BONDS IN A BALL GRID ARRAY

Edwin Chu, Cupertino, and Hu-Kong Lai, San Jose, both of Calif., assignors to ACC Microelectronics Corporation, Santa Clara, Calif.

Filed Nov. 13, 1995, Ser. No. 559,189

Int. Cl.^{6} H01L *23/48;23/52;29/40*

U.S. Cl. 257—737 **18 Claims**

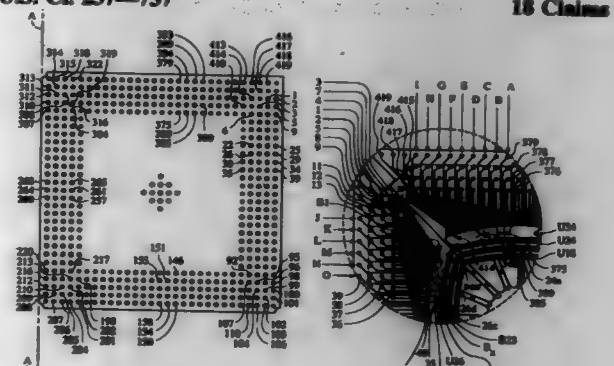

1. A chip package comprising:

an insulative member having first and second sides;

a die-attach region disposed on said first side;

a plurality of bond sites spaced apart from and surrounding said die-attach region on said first side, at least some of said bond sites being signal bond sites, said signal bond sites being sequentially numbered, so that each of said signal bond sites is identified by a sequence number; and

a plurality of solder bumps formed on said second side, at least some of said solder bumps being signal solder bumps, said signal solder bumps being disposed on said second side along a grid pattern and being sequentially numbered, so that each of said signal solder bumps is identified by a sequence number;

at least one bond site of said signal bond sites having a correspondence with one solder bump of said signal solder bumps such that said bond site and said solder bump have the same sequence number, said bond site further having an electrical connection to said solder bump.

5,703,403

ELECTRODE FOR SEMICONDUCTOR DEVICE AND METHOD FOR PRODUCING THE SAME

Susumu Sobue, Obu; Takeshi Yamauchi, and Shinichi Mukainakano, both of Nagoya, all of Japan, assignors to Nippondenso Co., Ltd., Kariya, Japan

Continuation of Ser. No. 338,785, Nov. 8, 1994, abandoned. This application Nov. 21, 1996, Ser. No. 754,383

Claims priority, application Japan, Nov. 8, 1993, 5-278301

Int. Cl.^{6} H01L *23/48;23/52;29/40*

U.S. Cl. 257—751 **6 Claims**

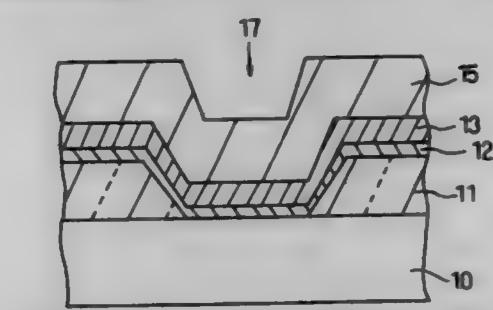

1. An electrode for a semiconductor device comprising:

a barrier layer disposed on a substrate and composed of an intermetallic compound containing a metal with a high melting point and nitrogen (N);

a nitride layer disposed on said barrier layer and defined by an intermetallic compound containing an element making up said barrier layer and aluminum (Al) as components thereof, said nitride layer having a thickness of at least 30 Å; and

an aluminum alloy wiring disposed on said nitride layer such that a crystal surface thereof is oriented mainly at the (111) plane, wherein:

an oxygen concentration in said barrier layer is no greater than 1 at %;

an oxygen concentration at an interface between said barrier layer and said nitride layer is no greater than 1 at %; and

a margin of difference between an interatomic distance of said nitride layer and an interatomic distance of said aluminum alloy wiring is no greater than 5%.

5,703,404

SEMICONDUCTOR DEVICE COMPRISING AN SIOF INSULATIVE FILM

Masazumi Matsuura, Hyogo, Japan, assignor to Mitsubishi Denki Kabushiki Kaisha, Tokyo, Japan

Continuation of Ser. No. 612,716, Mar. 8, 1996, abandoned. This application Dec. 24, 1996, Ser. No. 772,953

Claims priority, application Japan, Oct. 23, 1995, 7-274010

Int. Cl.^{6} H01L *29/80*

U.S. Cl. 257—758 **8 Claims**

1. A semiconductor device, comprising:

a substrate;

first and second metal interconnections formed on said substrate; and

a silicon oxide film formed on said substrate, and covering said first and second metal interconnections and filling a space between said first metal interconnection and said second metal interconnection,

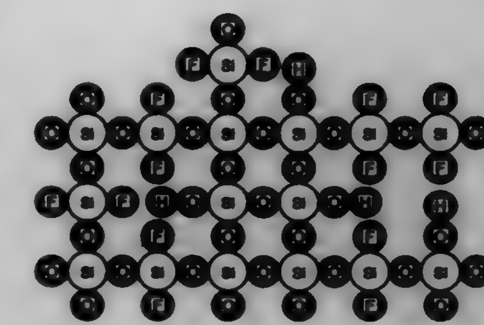

wherein the chemical formula of said silicon oxide film contains the following chemical structure unit.

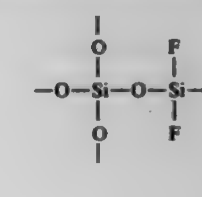

5,703,405

INTEGRATED CIRCUIT CHIP FORMED FROM PROCESSING TWO OPPOSING SURFACES OF A WAFER

Kenneth Arthur Zeber, Oakland Park, Fla., assignor to Motorola, Inc., Schaumburg, Ill.

Continuation of Ser. No. 345,975, Nov. 25, 1994, abandoned, which is a continuation of Ser. No. 31,453, Mar. 15, 1993, abandoned. This application Jan. 16, 1996, Ser. No. 591,194

Int. Cl.^{6} H01L *23/48;23/52*

U.S. Cl. 257—777 **9 Claims**

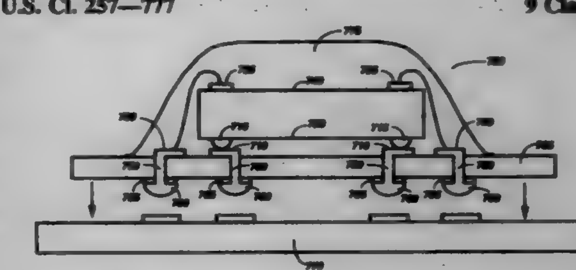

1. An integrated circuit chip, comprising:

an integrated circuit die having first and second opposing surfaces;

a first integrated circuit formed on the first surface, the first integrated circuit having a first plurality of terminals coupled thereto for connection to first circuitry external to the integrated circuit chip, wherein the first plurality of terminals is formed on the first surface; and

a second integrated circuit formed on the second surface, the second integrated circuit electrically isolated from the first integrated circuit, the second integrated circuit having a second plurality of terminals coupled thereto for connection to second circuitry external to the integrated circuit chip, wherein the second plurality of terminals is formed on the first surface and coupled to the second integrated circuit via plated holes formed through the integrated circuit die, wherein the second plurality of terminals is electrically isolated from the first plurality of terminals and the first integrated circuit.

5,703,406
INTERCONNECTION STRUCTURE FOR ATTACHING A SEMICONDUCTOR DEVICE TO A SUBSTRATE
Dae Soon Kang, Choongchungbook-Do, Rep. of Korea, assignor to LG Semicon Co., Ltd., Cheongju, Rep. of Korea
Filed Jan. 19, 1996, Ser. No. 587,744
Claims priority, application Rep. of Korea, Sep. 22, 1995, 31431/1995
Int. Cl.[6] H01L *23/48*
U.S. Cl. 257—778 **9 Claims**

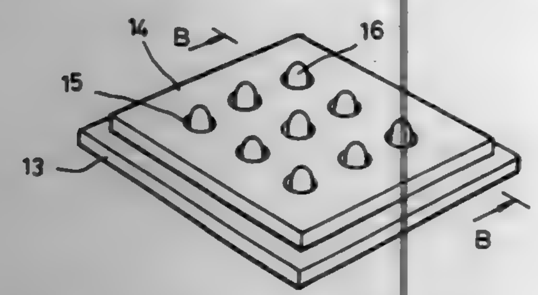

1. A module for mounting a semiconductor device on a substrate, the semiconductor device having a plurality of conductive media for conductive connection to the substrate, comprising:
an interconnection structure having a plurality of holes for receiving said plurality of conductive media to allow a conductive connection between the semiconductor device and the substrate, wherein said interconnection structure is in contact with said semiconductor device and the substrate to adhesively bond the semiconductor device to the substrate.

5,703,407
RESIN-SEALED TYPE SEMICONDUCTOR DEVICE
Masahiko Hori, Yokohama, Japan, assignor to Kabushiki Kaisha Toshiba, Kawasaki, Japan
Filed Feb. 12, 1996, Ser. No. 600,261
Claims priority, application Japan, Feb. 14, 1995, 7-025166
Int. Cl.[6] H01L *23/495;23/48;23/28*
U.S. Cl. 257—783 **5 Claims**

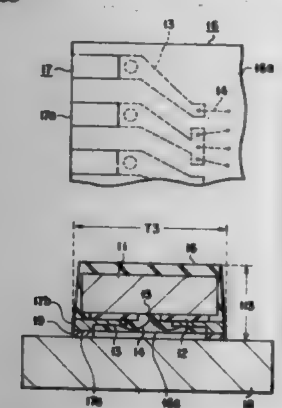

1. A resin-sealed type semiconductor device comprising:
a semiconductor element having a main surface and a plurality of electrodes arranged on said main surface;
a plurality of leads, each said lead constituted by an inner lead portion and an outer lead portion, bottom surfaces of said inner lead portions being overlapped with and fixed to the main surface of said semiconductor element via an adhesive insulating material, top surfaces of said inner lead portions being respectively electrically connected to said electrodes of said semiconductor element, and top surfaces of said outer lead portions being elevated relative to said top surfaces of said inner lead portions; and
a resin package for sealing said semiconductor element, said inner lead portions, and said outer lead portions, while leaving said top surfaces of said outer lead portions exposed in a same plane as a top surface of a portion of said resin package sealing the main surface of said semiconductor element, and side surfaces of said outer lead portions being exposed in flush relation with a peripheral surface of said resin package, such that said plurality of leads do not protrude from said resin package.

5,703,408
BONDING PAD STRUCTURE AND METHOD THEREOF
Liu Ming-Tsung, Hsin-Chu; Bill Y. B. Hsu, Chu-Pei; Hsien-Dar Chung, Hu-Wei Town, and Der-Yuan Wu, Hsin-Chu, all of Taiwan, assignors to United Microelectronics Corporation, Hsin-Chu, Taiwan
Filed Apr. 10, 1995, Ser. No. 419,558
Int. Cl.[6] H01L *23/48;23/52;29/40*
U.S. Cl. 257—784 **20 Claims**

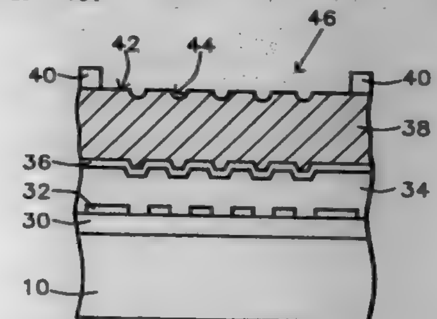

1. An improved bonding pad on a bonding pad area on a substrate comprising:
spaced stripes on the substrate in a least the bonding pad area, the stripes arranged in a pattern of broken parallel spaced lines:
a conformal dielectric layer over at least the stripes presenting an irregular top surface configuration including grooves, said grooves having a depth;
a conformal barrier layer over the dielectric layer, said conformal barrier layer having an irregular top surface configuration including grooves;
a conformal metal layer over said barrier layer; and
a passivation layer over said metal layer having a window over the bonding pad area.

5,703,409
ERROR COUNTING CIRCUIT
Katsumi Fukumitsu, Fukuoka, and Tadayuki Takada, Kawasaki, both of Japan, assignors to Fujitsu Limited, Kanagawa, Japan
Filed Aug. 1, 1994, Ser. No. 283,783
Claims priority, application Japan, Dec. 21, 1993, 5-321468
Int. Cl.[6] G06F *11/00*
U.S. Cl. 371—5.1 **7 Claims**

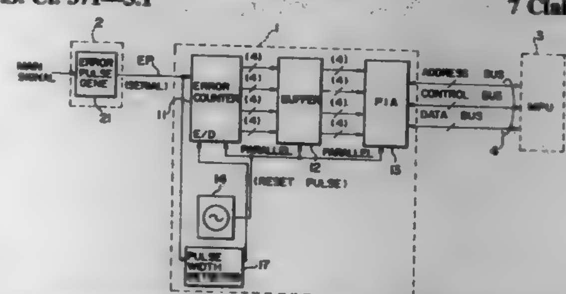

4. An error counting circuit for counting a number of code errors in a main signal in an external apparatus which is coupled to an optical transmission path, said error counting circuit comprising:
an error counter for counting error pulses received from the external apparatus and indicative of the number of code errors in the main signal in response to clock pulses having a predetermined period and outputting a counted value for each said predetermined period;
means for stopping a counting operation of said error counter when a power failure of the external apparatus occurs; and
wherein said stopping means includes a pulse width detector for detecting whether or not a pulse width of the error pulses is normal and disabling the counting operation of said error counter when an abnormal pulse width of the error pulses is detected.

5,703,410
CONTROL SYSTEM FOR ENGINE GENERATOR
Hirotoshi Maekawa, Tokyo, Japan, assignor to Mitsubishi Denki Kabushiki Kaisha, Tokyo, Japan
Filed Dec. 8, 1995, Ser. No. 569,986
Claims priority, application Japan, Jan. 18, 1995, 7-005622
Int. Cl.[6] H02P *9/04*
U.S. Cl. 290—40 C **10 Claims**

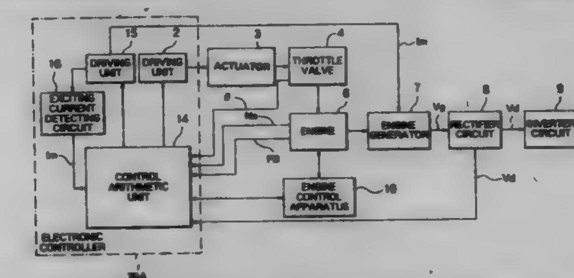

1. A control system for an engine generator, comprising:
a throttle valve for regulating a quantity of intake air supplied to an internal combustion engine;
engine control means for controlling a quantity of fuel to be injected to said engine and an ignition timing therefor;
an actuator for adjusting an opening degree of said throttle valve;
a rectifier circuit for rectifying an output voltage of said engine generator to thereby produce a DC load voltage;
a load supplied with an output power of said engine generator under application of said load voltage; and
an electronic controller for controlling an exciting current of said engine generator, said engine control means and said actuator on the basis of various information indicative of operation states of said engine;
said various information containing at least information concerning a load voltage which depends on resistance of said load and information concerning a rotation number of said engine;
said electronic controller including:
desired output power setting means for determining a desired output power of said engine generator for a given load voltage and storing said desired output power;
desired torque setting means for determining a desired torque demanded by said engine generator required for generating said desired output power on the basis of said load voltage and said crank shaft rotation number and storing said desired torque;
exciting current arithmetic means for arithmetically determining an exciting current of said engine generator so that a demanded torque of said generator coincides with said desired torque; and
exciting current control means for driving an excitation coil assembly of said engine generator with said excitation current;
wherein said demanded torque of said engine generator is controlled to be constant at said desired torque to thereby control said output power of said generator to be constant at said desired output power while allowing said engine to operate at a rotation number of the crank shaft at which a maximum output efficiency of said engine can be ensured.

5,703,411
RE-USEABLE EMERGENCY VEHICLE WIRING HARNESS AND CONTROL SYSTEM
James Bella, Atherton, and William G. Clark, Santa Cruz, both of Calif., assignors to TransCom Corporation, Menlo Park, Calif.
Filed Feb. 2, 1996, Ser. No. 597,457
Int. Cl.[6] G08B *5/00*
U.S. Cl. 307—10.1 **87 Claims**

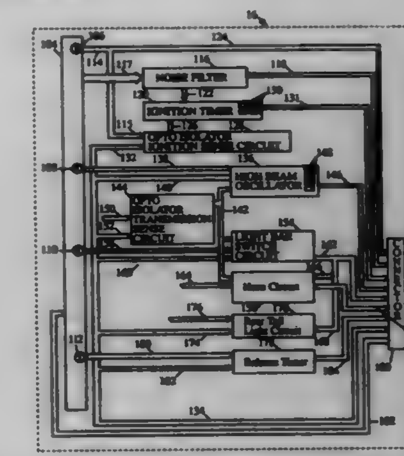

1. A re-useable emergency vehicle wiring harness and control system for controlling emergency vehicle accessories comprising:
a) an intergrated control unit having a plurality of control circuits responsive to a control console for controlling said vehicle accessories;
b) a prefabricated wiring harness providing interconnection between said control unit and said accessories and said control console; and
c) opto-isolator transmission sense means connected to an electrical line indicative of the vehicle transmission state, said opto-isolator transmission sense means outputing a corresponding reliable sense signal to said wiring harness for passage to said control unit.

5,703,412
ENERGY RESERVOIR PROTECTION APPARATUS IN VEHICLE OCCUPANT PROTECTION SYSTEM
Norikazu Takemoto; Hideki Ishizuka; Takeshi Konta, and Kunihiro Takeuchi, all of Tomioka, Japan, assignors to Airbag Systems Co., Ltd., Gunma, Japan
Filed Oct. 24, 1996, Ser. No. 740,068
Claims priority, application Japan, Oct. 30, 1995, 7-303306
Int. Cl.[6] B60L *3/00*
U.S. Cl. 307—10.1 **8 Claims**

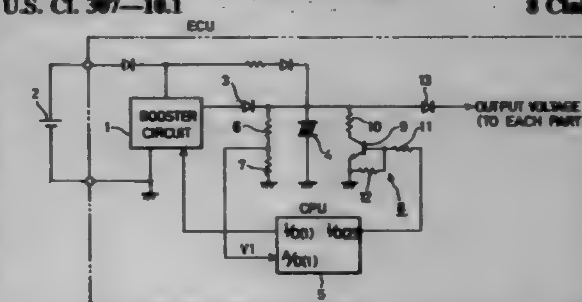

1. In an energy reservoir protection apparatus in a vehicle occupant protection system, said apparatus being provided with a capacitance diagnosis circuit for making the diagnosis in capacitance of an electrolytic capacitor, said capacitance diagnosis circuit having a booster circuit through which an output voltage of a battery is increased to a predetermined value and issued therefrom, said booster circuit having its output side connected with said electrolytic capacitor, said capacitance diagnosis circuit being provided with a discharge means for permitting, if necessary, said

electrolytic capacitor to discharge in said diagnosis in capacitor of said electrolytic capacitor; the improvement wherein said energy reservoir protection apparatus comprises:

an over-voltage judgment means for judging as to whether or not a terminal voltage of said electrolytic capacitor exceeds its breakdown voltage; and

a forced-discharge control means for having said discharge means of said capacitance diagnosis circuit operated for a predetermined period of time so that said electrolytic capacitor is forced to discharge when said over-voltage judgment means judges said terminal voltage of said electrolytic capacitor to be above said breakdown voltage;

whereby the over-voltage condition of said electrolytic capacitor is resolved.

5,703,413

METHOD FOR OPERATING A VEHICLE SECURITY SYSTEM INCLUDING CODE COMPARISON AFTER STARTING WHICH COUNTS START ATTEMPTS

William David Treharne, Farmington Hills, Mich., assignor to Ford Global Technologies, Inc., Dearborn, Mich.

Continuation-in-part of Ser. No. 586,448, Jan. 16, 1996, Pat. No. 5,637,929. This application Dec. 10, 1996, Ser. No. 763,026

Int. Cl.[6] B60R *25/04*

U.S. Cl. 307—10.5 **1 Claim**

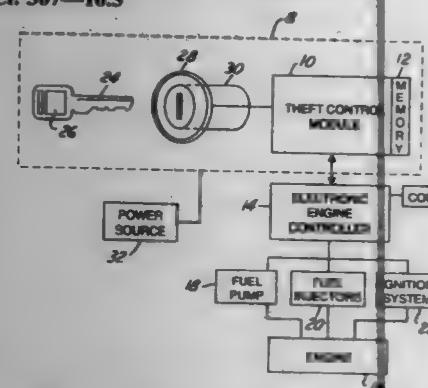

1. A method for operating a security system for an automotive vehicle having an engine including engine running electrical components and an electronic engine controller, said automotive vehicle including a lock switch having a selected position providing power to said engine running electrical components to run said engine, said lock switch being movable by a key having a predetermined cut, said key further containing a first security code stored electronically, said electronic engine controller comprising a counter for counting an attempted start count, said security system having a theft control module operatively connected between said electronic engine controller and said lock switch, said theft control module having a memory storing a second security code and having means for communicating with said key to retrieve said first security code, said method comprising the steps of:

using said key to place said lock switch in said selected position;

comparing said attempted start count to a predetermined number;

disabling said engine from running if said attempted start count exceeds said predetermined number, otherwise enabling starting of said engine;

incrementing said attempted start count;

operating said theft control module to interrogate said key for said first security code;

receiving said first security code into said theft control module;

comparing said first security code with said second security code;

if said first security code does not equal said second security code, then disabling said power to said running electrical components and setting said attempted start count to be greater than or equal to said predetermined number;

if said first security code equals said second security code, then:

signaling said electronic engine controller of said equality

generating a challenge code in said electronic engine controller;

transmitting said challenge code to said theft control module;

calculating a response code in said theft control module based on a secret algorithm operating on said challenge code;

transmitting said response code to said electronic engine controller;

receiving said response code in said electronic engine controller;

calculating a comparison code in said electronic engine controller based on said secret algorithm;

comparing said response code to said comparison code;

if said comparison code equals said response code then resetting said attempted start count and supplying power to said engine running electrical components;

if said comparison code does not equal said response code then disabling said power to said running electrical components and setting said attempted start count to be greater than or equal to said predetermined number; and

if no response code is received within a predetermined time then disabling said power to said running electrical components.

5,703,414

ANTI-THEFT APPARATUS WHICH PERMITS THE ENGINE TO START PRIOR TO ID SIGNAL DISCRIMINATION

Eiji Mutoh; Suguru Asakura, and Akira Nagai, all of Saitama-ken, Japan, assignors to Honda Giken Kogyo Kabushiki Kaisha, Tokyo, Japan

Continuation of Ser. No. 545,206, Oct. 19, 1995, abandoned. This application Apr. 8, 1997, Ser. No. 832,175

Claims priority, application Japan, Oct. 28, 1994, 6-287156

Int. Cl.[6] B60R *25/04*

U.S. Cl. 307—10.5 **8 Claims**

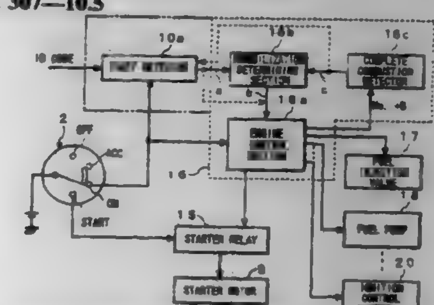

1. An anti-theft apparatus for a vehicle comprising:

engine control means for immediately starting a vehicle engine by use of a starter motor in response to an ignition switch-ON operation;

means responsive to the rpm of the vehicle engine and to the output voltage of the vehicle battery for determining whether the vehicle engine is running independently of the starter motor and for supplying an engine running signal after it is determined that the engine is running independently of the starter motor;

theft detecting means operative only after occurrence of said engine running signal for determining the legitimacy of an ID signal, said theft detecting means operative to issue an output signal comprising one of an enable signal and a theft signal, the enable signal allowing the engine to continue running if said ID signal is determined to be legitimate, and the theft signal prohibiting continued running of the vehicle engine if said ID signal is determined to be illegitimate;

means responsive to an output signal from said theft detecting means that comprises said theft signal for generating a halt instruction if said ID signal has been determined to be illegitimate; and

means for stalling the running engine by supplying said halt instruction to said engine control means.

5,703,415

POWER SUPPLY CIRCUIT

Toshimasa Tanaka, Kyoto, Japan, assignor to Rohm Co., Ltd., Kyoto, Japan

Filed Apr. 17, 1996, Ser. No. 633,948

Claims priority, application Japan, Apr. 18, 1995, 7-091218

Int. Cl.[6] H02J *9/06*

U.S. Cl. 307—66 **8 Claims**

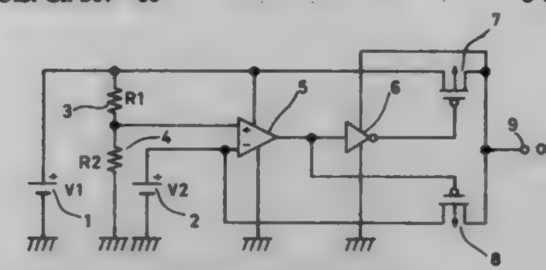

1. A power supply circuit, comprising:

a first power source;

a second power source;

an output terminal;

voltage dividing means, connected to said first power source, for dividing a voltage of said first power source;

comparing means, connected to said second power source and an output of said voltage dividing means, for comparing the output of said voltage dividing means with said second power source; and

selecting means, connected to an output of said comparing means, for selecting either said first power source or said second power source depending on the output of said comparing means and for supplying a selected voltage to the output terminal.

5,703,416

ELECTROMAGNETIC COMPATIBILITY FOR INTEGRATED CIRCUIT PINS AND INERNAL NODES

Stephen C. Hinkle, Gilbert, and Richard Hull, Chandler, both of Ariz., assignors to Microchip Technology Incorporated, Chandler, Ariz.

Filed Feb. 23, 1996, Ser. No. 606,277

Int. Cl.[6] H03B *1/00*

U.S. Cl. 307—89 **18 Claims**

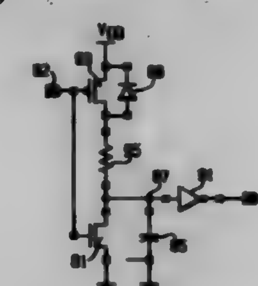

1. A method for providing electromagnetic interference (EMI) immunity for an integrated circuit (IC), comprising the steps of:

providing an input pin of the IC for receiving an applied input signal thereat;

analyzing an input signal in presence of EMI applied to said input pin, and determining therefrom the pulse width of any false pulse present in the input signal as a consequence of EMI, including accounting for extended duration of the false pulse attributable to IC-induced hysteresis; and

filtering an EMI-induced false pulse in the input signal with a filter having predetermined characteristics including a filter time constant having a duration at least as great as width of said EMI-induced false pulse.

5,703,417

LINEAR MOTOR FOR EXTENDED TRAVEL

Hugh-Peter Granville Kelly, Westcliff on Sea, United Kingdom, assignor to Linear Drives Limited, Essex, United Kingdom

Filed Sep. 28, 1995, Ser. No. 535,396

Claims priority, application United Kingdom, Sep. 30, 1994, 9419734

Int. Cl.[6] H02K *41/02;41/03*

U.S. Cl. 310—12 **16 Claims**

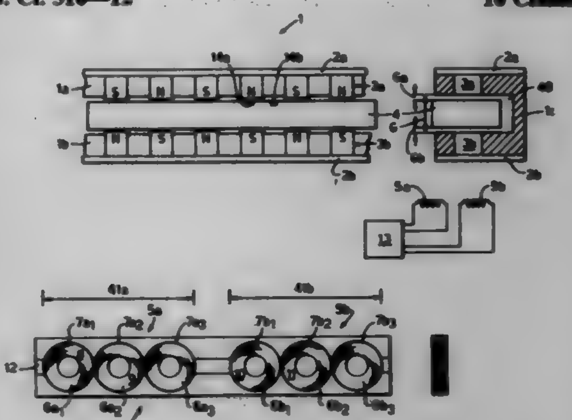

1. A linear motor comprising:

an armature and a stator moveable relative to one another along a path of movement and having, respectively, first and second sets of magnetic flux generators,

the flux generators of the first set being arranged in pairs uniformly spaced at a predetermined pole pitch along the length of said path, the flux generators of each pair being disposed in an opposed relationship to one another to opposite sides of said path and producing magnetic fields across and defining therebetween at least one stator magnetic circuit air gap extending over the length of said path, the polarities of the fields alternating between successive flux generator pairs along said air gap,

the second set of flux generators comprising at least two drive coils disposed in said magnetic fields, each drive coil comprising a contiguous set of cylindrical sub-coils, the sub-coils of each set having a pole pitch substantially equal to that of the first set of flux generators, the sub-coils of the respective drive coils being disposed such that their axes are directed laterally of said path so as to extend across said gap and such that the axes of the sub-coils of one set are offset longitudinally of the path from those of the other set by an amount differing from said pole pitch,

the sub-coils of a drive coil being arranged such that their axes are spaced apart longitudinally of the motor by a distance substantially equal to their maximum diameters and being energisable such that the mutually adjacent portions of the windings of longitudinally successive sub-coils of a coil produce fields of the same polarity.

5,703,418

DC COOLED LINEAR MOTOR

Shlomo Assa, Encinitas, Calif., assignor to Northern Magnetics, Inc., Santa Clarita, Calif.

Filed Mar. 22, 1996, Ser. No. 621,811

Int. Cl.[6] H02K *1/20;41/00*

U.S. Cl. 310—12 **16 Claims**

1. A DC linear motor, comprising:

a primary extending in a linear direction,

a current receiving coil mounted on a base for linear movement on a track extending in the linear direction, an air gap defined between the coil and the primary, a base including means for receiving a cooling fluid, and

a duct for directing the cooling fluid through the base to effect cooling.

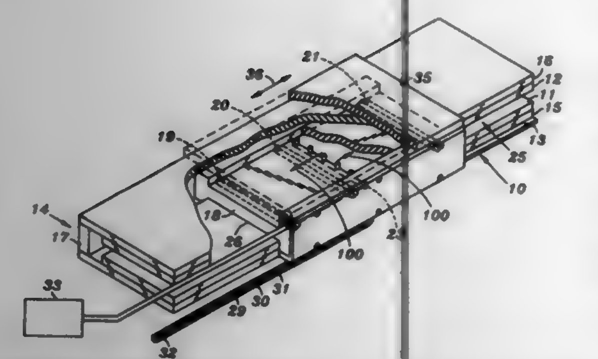

the primary being a permanent magnet having two arms, and the coil extends between the arms, such that an air gap is defined between each arm and the coil, and wherein cooling is effected in each air gaps, and

wherein the duct include multiple spaced ports exiting from the duct thereby to eject cooling fluid into the air gap.

5,703,419

STEPPER MOTOR WITH SHORTENED AXIAL LENGTH

Takashi Mizutani, Yokkaichi, Japan, assignor to Nippondenso Co., Ltd., Kariya, Japan

Filed Apr. 3, 1996, Ser. No. 627,096

Claims priority, application Japan, Apr. 27, 1995, 7-104336

Int. Cl.[6] H02K *37/12;21/08*

U.S. Cl. 310—49 R **14 Claims**

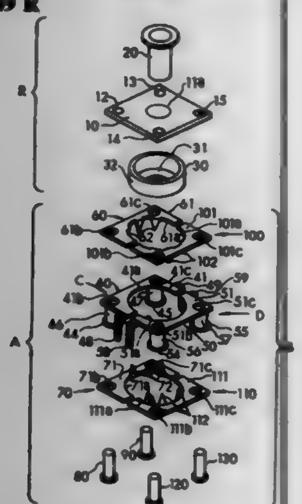

1. A stepper motor comprising:

a cylindrical magnet rotor supported rotatably and having a plurality of magnetic poles arranged on a circumferential periphery in a circumferential direction;

two pairs of cores wound with respective coils thereon around central axes thereof, the central axes being in parallel with a rotary axis of the magnet rotor; and

a pair of rectangular stators located along the circumferential periphery of the magnet rotor and having respective openings which face radially each other to receive the magnet rotor therein, each of the stators having first and second pole teeth facing radially the circumferential periphery of the rotor magnet, and each of the stators respectively supporting axial ends of one pair of the cores at angled corners of said stators sandwiching the cores therebetween so that the first and second pole teeth are magnetized in the opposite polarities.

5,703,420

MOVING MAGNET TYPE MULTI-PHASE LINEAR MOTOR WITH VIBRATION SUPPRESSION AND COIL COOLING MEANS

Shigeto Kamata, and Toshikazu Sakai, both of Yokohama, Japan, assignors to Canon Kabushiki Kaisha, Tokyo, Japan

Filed Oct. 6, 1995, Ser. No. 540,131

Claims priority, application Japan, Oct. 11, 1994, 6-245275

Int. Cl.[6] H02K *9/00;41/02*

U.S. Cl. 310—54 **10 Claims**

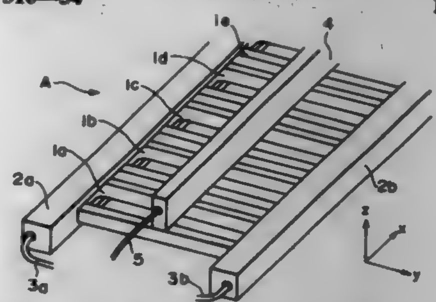

1. A moving magnet type multi-phase linear motor for moving a movable element relative to a stationary element by giving a thrust to a magnet of the movable element side by supplying a current to a plurality of coils of the stationary element side, comprising:

support members for supporting the plurality of coils by holding two end portions of the coils, said support members extending along a coil arrangement direction;

pipes for supplying a coolant inside said support members, said pipes extending along the coil arrangement direction;

a fixing member for fixing the stationary element, said fixing member being arranged at substantially central portions of the coils to extend along the coil arrangement direction, wherein the movable element has a substantially C-shaped section when viewed along a direction perpendicular to the coil arrangement direction; and

a cooling pipe for supplying a coolant arranged in said fixing member.

4. A moving magnet type multi-phase linear motor for moving a movable element relative to a stationary element by giving a thrust to a magnet of the movable element side by supplying a current to a plurality of coils of the stationary element side, comprising:

support members for supporting the plurality of coils by holding two end portions of the coils, said support members extending along a coil arrangement direction;

pipes for supplying a coolant to inside said support members, said pipes extending along the coil arrangement direction;

a fixing member for fixing the stationary element, said fixing member being arranged on said support members to extend along the coil arrangement direction, wherein the movable element has a substantially U-shaped section when viewed along a direction perpendicular to the coil arrangement direction; and

a cooling pipe for supplying a coolant to said fixing member arranged in said fixing member.

5,703,421

RELUCTANCE GENERATOR/MOTOR COOLING

Edward B. Durkin, Dayton, Ohio, assignor to The United States of America as represented by the Secretary of the Air Force, Washington, D.C.

Filed May 24, 1996, Ser. No. 653,035

Int. Cl.[6] H02K *9/00*

U.S. Cl. 310—61 **20 Claims**

1. A reduced coolant windage loss salient pole high speed reluctance dynamoelectric machine comprising the combination of:

a tubular shaped salient-poled stator member having a plurality of internal stator poles and stator pole-carried electrical windings;

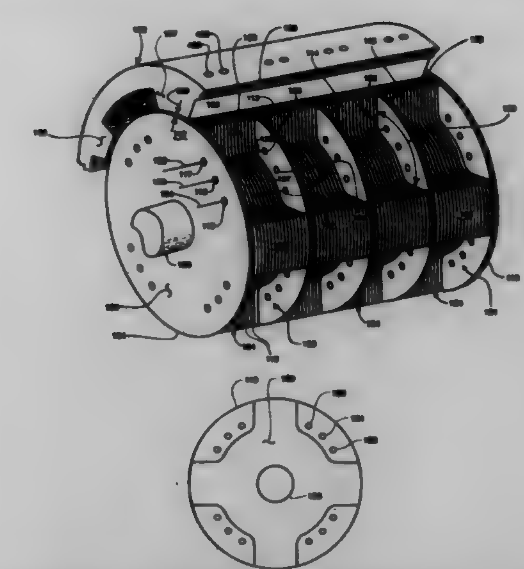

a salient pole stacked lamination cylindrical rotor member received centrally within said stator member, extending along a stator central axis and rotatable about said central axis;

a plurality of axially spaced circular disc thermal conductor members disposed one at each end of said rotor member and intermediate selected laminations of said rotor member and segregating said rotor member into axially adjacent cylindrical segments each including a plurality of rotor periphery-facing cooling chambers disposed angularly intermediate said rotor salient poles;

axial coolant flow enabling and flow-controlling aperture members disposed in each of said rotor circular disc thermal conductor members in communication with adjacent cooling chamber regions

radial coolant flow enabling and flow controlling aperture members disposed in said tubular shaped salient-poled stator member in spent coolant flow escape communication with said rotor member axially adjacent cylindrical segment cooling chamber regions.

5,703,422

MAGNETIC ECCENTRIC MOTION MOTOR

Stephen C. Jacobsen, and Clark C. Davis, both of Salt Lake City, Utah, assignors to Sarcos, Inc., Salt Lake City, Utah

Division of Ser. No. 88,178, Jul. 7, 1993, Pat. No. 5,426,336, which is a division of Ser. No. 663,444, Mar. 1, 1991, Pat. No. 5,252,870. This application Jun. 6, 1995, Ser. No. 467,710

Int. Cl.[6] H02K *7/06*

U.S. Cl. 310—82 **3 Claims**

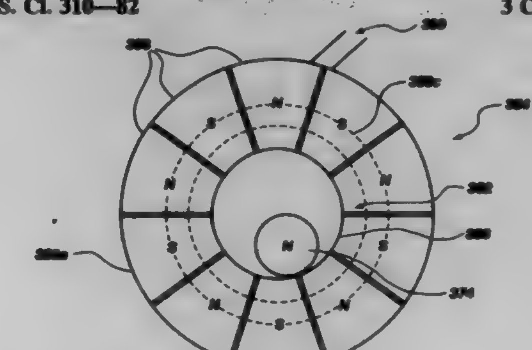

1. An eccentric-motion motor comprising

a stator defining a continuous closed surface pathway,

a plurality of elongate permanent magnets disposed in an array at the closed surface, the magnets having enlarged end pieces being disposed to form the continuous closed surface pathway,

an armature comprising a bar of ferromagnetic material disposed to roll on the closed surface pathway,

an electrical conductor for receiving electrical current and helically spaced out of contact with and about the armature and out of electrical contact with the stator, said conductor suspended through electrically insulated apertures in the stator, the apertures having electrically insulated sleeves, the sleeves having an outer portion in contact with the aperture and an inner portion in contact with and compressed about leads of the conductor, and

means for supplying electrical current of selectively alternatable polarity to the conductor to successively cause the armature to switch polarities and thereby be attracted toward and repelled from the permanent magnets to thus roll on the pathway.

5,703,423

ENERGY STORAGE FLYWHEEL SYSTEM

Tadashi Fukao, 24-45 Matsukazedai, Aoba-ku, Yokohama-shi, Kanagawa-ken 227; Akira Chiba, 1-8-14-707 Shimo Ochiai, Shinjuku-ku, Tokyo 161, and Chikara Michioka, 2-8-21-909 Hatanodai, Shinagawa-ku, Tokyo 142, all of Japan, assignors to Tadashi Fukao, Yokohama; Akira Chiba; Chikara Michioka, both of Tokyo; Seiko Seiki Co., Inc., Narashino; Nikkiso Co., Ltd., and Ebara Corporation, both of Tokyo, all of Japan

Filed Mar. 26, 1996, Ser. No. 621,589

Claims priority, application Japan, Mar. 29, 1995, 7-096235

Int. Cl.[6] H02K *7/02;7/09*

U.S. Cl. 310—90.5 **8 Claims**

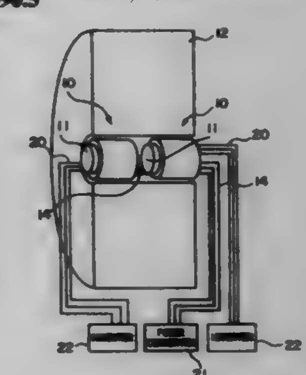

1. An energy storage flywheel system comprising:

stator means;

a rotor surrounding said stator means and being rotatable with respect thereto;

a flywheel for storing energy integrally attached to said rotor;

said stator means including a pair of axially spaced actuators each having a stator portion containing a first set of windings comprising main windings that provide a number of poles for rotating said rotor and a second set of windings comprising auxiliary windings that provide a number of poles different from the number of poles provided by said first set of windings;

power supply means for supplying voltages or currents to said first set of windings and to said second set of windings; and

control means for supplying voltages or currents to said first set of windings to rotate said rotor, and to said second set of windings to produce radial forces acting on said rotor to support said rotor out of contact with said stator.

5,703,424

BIAS CURRENT CONTROL CIRCUIT

Richard A. Dorman, Wynantskill, N.Y., assignor to Mechanical Technology Inc., Latham, N.Y.

Filed Sep. 16, 1996, Ser. No. 714,246

Int. Cl.[6] H02K *7/09*

U.S. Cl. 310—90.5 — 9 Claims

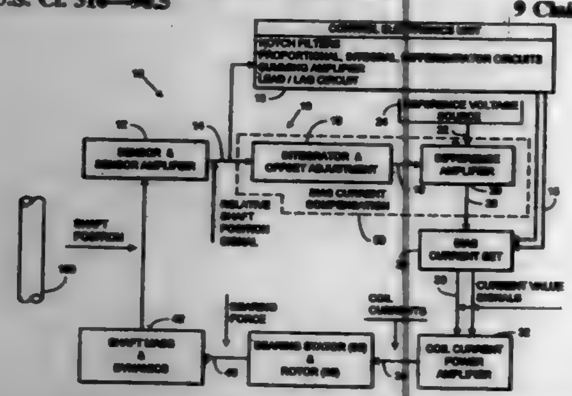

1. A control system for a magnetic bearing, the magnetic bearing including a rotor responsive to a shaft and a stator including upper and lower magnetic coils, the control system including:
- sensor means for determining a relative position of the shaft;
- means for integrating and offsetting said relative position of the shaft;
- means for subtracting an output of said means for integrating and offsetting from a reference voltage;
- bias current control means responsive to said means for subtracting, said bias current control means including voltage dividers which generate a voltage output;
- coil current amplifier means receiving said voltage output from said bias current control means; said coil current amplifier means generating a current to the upper and lower coils of the magnetic bearing.

5,703,425

PROCESS FOR MANUFACTURING A PIEZOELECTRIC COMPONENT

Thierry Feral, Seurre; Bernard Fromont, Contes; Ronan Stephan, Varois et Chaignot; Eric Sernit, Mouans-Sartoux, and Olivier Lacour, Plan de Grasse, all of France, assignors to Thomson-CSF, Paris, France

PCT No. PCT/FR94/00031, § 371 Date Jul. 31, 1995, § 102(e) Date Jul. 31, 1995, PCT Pub. No. WO94/17562, PCT Pub. Date Aug. 4, 1994

PCT Filed Jan. 11, 1994, Ser. No. 495,677

Claims priority, application France, Jan. 29, 1993, 93 00949

Int. Cl.[6] H01L *41/08*

U.S. Cl. 310—366 — 10 Claims

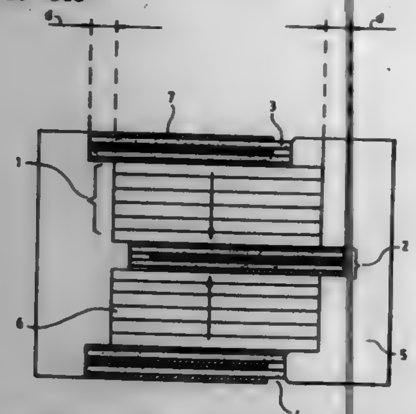

1. Process for manufacturing a piezoelectric; component consisting of the stacking of at least one piezoelectric element and of at least two metallic electrodes, each piezoelectric element being inserted between two metallic electrodes, characterized in that it comprises n steps of coiling a piezoelectric film with a number of turns equal to p and n+1 steps of coiling a metallic film with a number of turns equal to q, n, p and q with being integers greater than or equal to 1, each step of coiling of piezoelectric film making it possible to produce a piezoelectric element and each step of coiling of metallic film making it possible to produce a metallic electrode, each coiling of metallic film being carried out so that each metallic electrode has an overhang (d) with respect to the piezoelectric element that adjoins it, the overhangs (d) of two metallic electrodes hugging the same piezoelectric element being located on opposite sides wherein said metallic films are produced by using dielectric sheets covered beforehand with metallizations on at least one of their faces, each metallization having non-metallized margin.

5,703,426

FIELD SYSTEM ASSEMBLY OF COMMUTATOR MOTOR, COMMUTATOR MOTOR HAVING FIELD SYSTEM ASSEMBLY, AND METHOD FOR MANUFACTURING FIELD SYSTEM ASSEMBLY

Makoto Ueno, Takefu; Katsutoshi Fujita, Fukui, and Tetsuo Shimasaki, Fukui-ken, all of Japan, assignors to Matsushita Electric Industrial Co., Ltd., Kadoma, Japan

Filed Jun. 6, 1995, Ser. No. 466,978

Claims priority, application Japan, Jun. 6, 1994, 6-123660

Int. Cl.[6] H02K *1/12*

U.S. Cl. 310—258 — 11 Claims

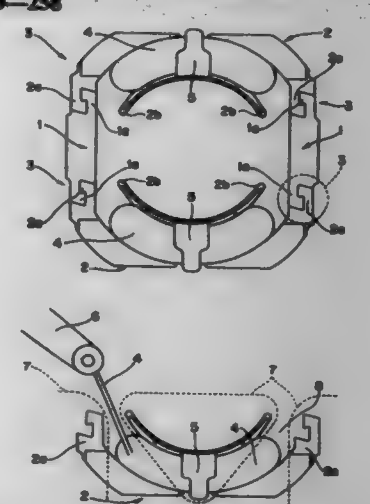

1. A field core for a field system assembly of a double pole commutator motor, said field core comprising:
- a first pole forming a winding slot and having a first connecting portion and a second connecting portion;
- a second pole, positioned opposite said first pole, forming a winding slot and having a first connecting portion and a second connecting portion, wherein said first connecting portion of said first pole opposes said second connecting portion of said second pole, and said second connecting portion of said first pole opposes said first connecting portion of said second pole;
- a first yoke having a first connecting portion and a second connecting portion, wherein said first connecting portion of said first yoke engages said first connecting portion of said first pole, and said second connecting portion of said yoke engages said second connecting portion of said second pole; and
- a second yoke, located opposite said first yoke, having a first connecting portion and a second connecting portion, wherein said first connecting portion of said second yoke engages said first connecting portion of said second pole, and said second connecting portion of said second yoke engages said second connecting portion of said first pole,

wherein said first connecting portion of said first yoke is pressed into engagement with said first connecting portion of said first pole,

said second connecting portion of said yoke is pressed into engagement with said second connecting portion of said second pole,

said first connecting portion of said second yoke is pressed into engagement with said first connecting portion of said second pole, and

said second connecting portion of said second yoke is pressed into engagement with said second connecting portion of said first pole.

5,703,427

SURFACE-WAVE DISTRIBUTED ACOUSTIC REFLECTION TRANSDUCER AND FILTER INCLUDING SUCH A TRANSDUCER

Marc Solal, Antibes; Pascal Ventura, and Jean-Michel Hode, both of Valbonne, all of France, assignors to Thomson-CSF, Paris, France

Continuation of Ser. No. 338,448, Nov. 21, 1994, abandoned. This application Oct. 15, 1996, Ser. No. 730,173

Claims priority, application France, Mar. 19, 1993, 93 03205

Int. Cl.[6] H03H *9/145*

U.S. Cl. 310—313 D — 8 Claims

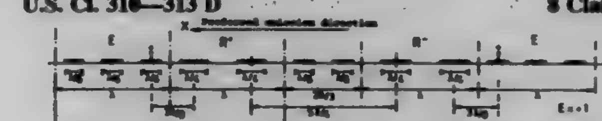

1. A surface-acoustic-wave transducer operating at a predetermined frequency for coupling electrical energy into acoustic energy on a substrate, said transducer comprising:
- a substrate which supports propagation of surface-acoustic waves;
- a plurality of interdigitated electrodes oriented on said substrate to convert input electrical energy into propagating surface-acoustic-waves on said substrate;
- a first plurality of said electrodes being irregularly placed in at least one region of the transducer so as to enhance the reflection of acoustic energy in one direction, and a second plurality of said electrodes being irregularly placed in at least one further region of the transducer so as to enhance the reflection of acoustic energy in the opposite direction thereby resulting in local acoustic resonances within the transducer which serve to increase the coupling of the transducer over a limited range of frequencies, the position of said first and second plurality of irregularly placed electrodes being a function of a desired resonance frequency wherein said desired resonance frequency is said predetermined frequency,

said electrodes being asymmetrically arranged whereby the acoustic energy is radiated from the transducer predominantly in a preferred direction.

5,703,428

ELECTRIC MAINS VOLTAGE LAMP

Livio Borgis, S. Antonino di Susa, Italy, assignor to U.S. Philips Corporation, New York, N.Y.

Filed Dec. 19, 1995, Ser. No. 574,828

Claims priority, application European Pat. Off., Dec. 20, 1994, 94203687; Jan. 27, 1995, 95200200

Int. Cl.[6] H01J *5/54;* H01R *4/50*

U.S. Cl. 313—318.1 — 17 Claims

1. An electric mains voltage lamp comprising:
- a sealed glass envelope having an axis;
- a lamp cap fixed to the envelope and surrounding the axis thereof, said lamp cap having contacts and a substantially cylindrical portion abutting the envelope;
- an electric element inside the envelope, from which current conductors extend to the contacts of the lamp cap;
- a resilient cover member circumferentially clamping around and covering at least a portion of the lamp,

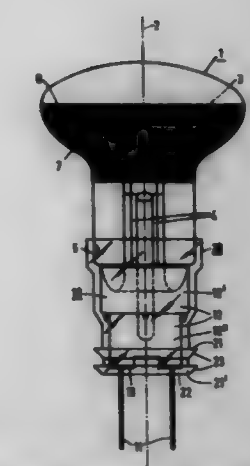

characterized in that: the cover member clamps around and covers the cylindrical portion of the lamp cap, leaving bare the contacts thereof, and has a first circumferential, outwardly extending flexible collar.

5,703,429

DIRECTLY HEATED CATHODE STRUCTURE

Chang-seob Kim; Seok-bong Son, both of Suwon; Sang-kyun Kim, and Bong-uk Jeong, both of Seoul, all of Rep. of Korea, assignors to Samsung Display Devices Co., Ltd., Kyungki-do, Rep. of Korea

Filed Dec. 13, 1995, Ser. No. 571,479

Claims priority, application Rep. of Korea, Dec. 28, 1994, 94-38313

Int. Cl.[6] H01J *19/06*

U.S. Cl. 313—346 R — 16 Claims

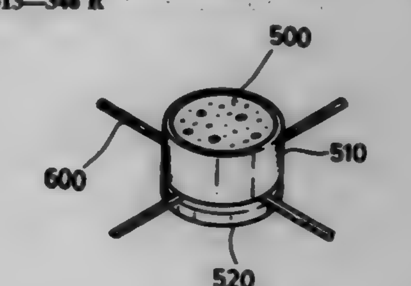

1. A directly heated cathode structure comprising:
- a porous pellet impregnated with an electron radiating material;
- a cup-shaped container holding said porous pellet;
- a metal member welded to said container; and
- a filament disposed between said container and said metal member.

5,703,430

COLOR CATHODE RAY TUBE WITH EDDY CURRENT REDUCING ELECTRON GUN

Martijn J. Dekker, Eindhoven, Netherlands, assignor to U.S. Philips Corporation, New York, N.Y.

Filed Aug. 16, 1996, Ser. No. 698,640

Claims priority, application European Pat. Off., Aug. 18, 1995, 95202235

Int. Cl.[6] H01J *29/51*

U.S. Cl. 313—409 — 2 Claims

1. A colour cathode ray tube comprising in an evacuated envelope an in-line electron gun for generating three electron beams situated in one plane, said electron beams being directed to a display screen on an interior portion of the evacuated envelope, and a deflection unit for deflecting the electron beams over the screen, said electron gun comprising a centering cup at the end of

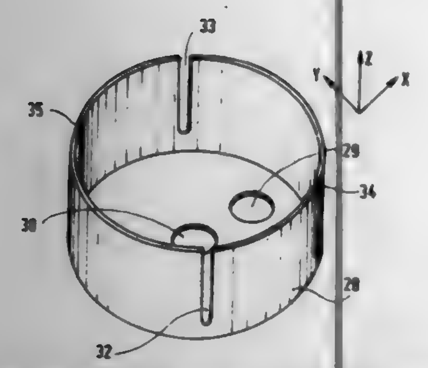

the electron gun facing the display screen, said centering cup having a central and two outer apertures for passing the three electron beams, characterized in that, the centering cup is provided with four slits, positioned substantially mirror-symmetrical with respect to the in-line plane and with respect to a plane perpendicular to the in-line plane through the central aperture, a line drawn through two slits and the central opening making an angle with the in-line plane ranging between 51 and 63 degrees.

5,703,431

DISPLAY SCREEN AND METHOD OF MANUFACTURING THE SAME

Takeo Itou, Kumagaya, and Hidemi Matsuda, Fukaya, both of Japan, assignors to Kabushiki Kaisha Toshiba, Kawasaki, Japan

Filed Dec. 26, 1995, Ser. No. 579,609

Claims priority, application Japan, Dec. 28, 1994, 6-322059

Int. Cl.⁶ H01J *29/10*

U.S. Cl. 313—461 **8 Claims**

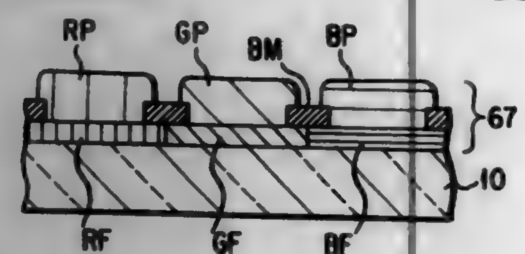

1. A display screen comprising:
a transparent substrate having an inner surface and an outer surface;
optical filter layers each containing color pigment particles having an average particle size of 0.2 μm or less and each formed on said inner surface of said transparent substrate as rectangular or circular dots or stripes, the optical filter layers each having a first surface which faces the said inner surface of said transparent substrate and each having a second surface respectively opposite to each said first surface;
a black matrix layer containing black pigment particles having an average particle size of 0.2 to 5 μm and at least a part of which is formed on each said second surface of said optical filter layers formed to cover peripheral regions of said filter layers except for central portions thereof; and
phosphor layers formed on said optical filter layers and having an emission color corresponding to a color of a pigment contained in said optical filter layers.

5,703,432

SCREEN STRUCTURE OF A CATHODE-RAY TUBE

Bong-kwon Jeong, Kyungsangnam-do, Rep. of Korea, assignor to Samsung Display Devices Co., Ltd., Kyungki-do, Rep. of Korea

Filed May 13, 1996, Ser. No. 645,276

Claims priority, application Rep. of Korea, Jun. 21, 1995, 95-14157

Int. Cl.⁶ H01J *1/62*

U.S. Cl. 313—461 **3 Claims**

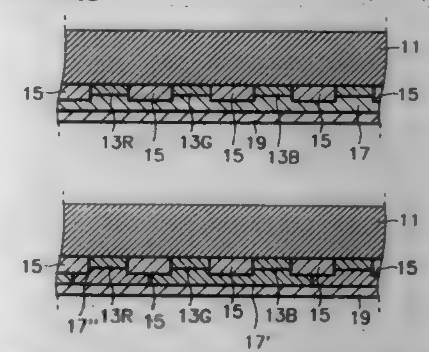

1. A screen structure for a cathode-ray tube comprising:
red, green, and blue color filters arranged on the screen;
black matrixes disposed between the color filters; and
a complex phosphor comprising at least two phosphors selected from a group consisting of red, green, and blue phosphors in substantially equal proportion spread on the color filters and the black matrixes.

5,703,433

PLASMA DISPLAY PANEL AND METHOD FOR FORMING FLUORESCENT SCREENS OF THE SAME

Hideaki Fujii; Hiroshi Ishiga; Masatoshi Harayama, and Motohiro Oka, all of Tokyo, Japan, assignors to Dai Nippon Printing Co., Ltd., Japan

Division of Ser. No. 618,771, Mar. 20, 1996, Pat. No. 5,601,468, which is a continuation of Ser. No. 274,780, Jul. 14, 1994, abandoned, which is a continuation of Ser. No. 960,110, Oct. 13, 1992, abandoned. This application Nov. 19, 1996, Ser. No. 752,602

Claims priority, application Japan, Oct. 14, 1991, 3-292025; Nov. 21, 1991, 3-331559; Jun. 23, 1992, 4-187399

Int. Cl.⁶ H01J *29/24;17/49*

U.S. Cl. 313—484 **5 Claims**

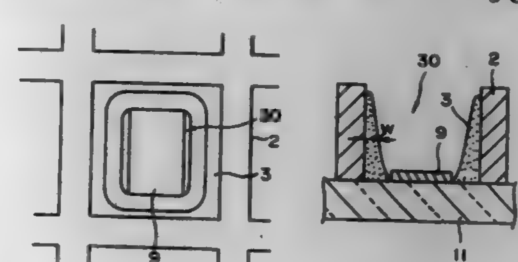

1. A plasma display panel, comprising:
a rear plate;
a front plate;
barrier ribs interposed between said rear plate and said front plate, said barrier ribs having side walls extending substantially perpendicular to said front and rear plates;
an electrode disposed on said rear plate; and
a fluorescent screen formed on each side wall of said barrier ribs such that said electrode is exposed and an area in a plane parallel to said front and rear plates in a discharging space defined and formed by said fluorescent screen is substantially rectangular in shape with rounded corners and gradually increases toward said front plate, wherein said fluorescent screen has a film thickness ranging from 30 to 50 μm substantially at the center position of each side wall of said barrier ribs.

5,703,434

Patent Not Issued For This Number

5,703,435

DIAMOND FILM FLAT FIELD EMISSION CATHODE

Nalin Kumar, Austin, and Chenggang Xie, Cedar Park, both of Tex., assignors to Microelectronics & Computer Technology Corp., Austin, Tex.

Continuation of Ser. No. 71,157, Jun. 2, 1993, which is a continuation-in-part of Ser. No. 851,701, Mar. 16, 1992, abandoned. This application May 23, 1996, Ser. No. 653,729

Int. Cl.⁶ H01J *1/30*

U.S. Cl. 313—495 **19 Claims**

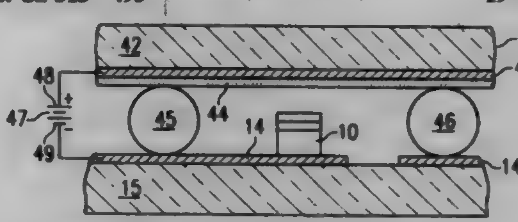

11. A field emission cathode, comprising:
a layer of conductive material: and
a layer of low work function material deposited over said conductive material, said low work function material having a relatively flat emission surface operable for emitting electrons in response to an applied electric field, wherein some of said low effective work function material is amorphic diamond.

5,703,436

TRANSPARENT CONTACTS FOR ORGANIC DEVICES

Stephen R. Forrest, Princeton, N.J.; Mark E. Thompson, Anaheim Hills, Calif.; Paul E. Burrows, Princeton, N.J.; Vladimir Bulovic, Metuchen, N.J., and Gong Gu, Princeton, N.J., assignors to The Trustees Of Princeton University, Princeton, N.J.

Continuation-in-part of Ser. No. 354,674, Dec. 13, 1994. This application Mar. 6, 1996, Ser. No. 613,207

Int. Cl.⁶ H01J *1/62*

U.S. Cl. 313—506 **29 Claims**

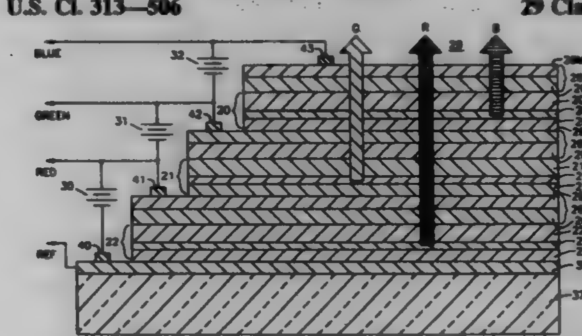

1. A light emitting device including at least one organic light emitting device (OLED) that is substantially transparent (TOLED) when de-energized, comprising:
a substantially transparent substrate having top and bottom surfaces;
a first substantially transparent thin film coating of indium tin oxide (ITO) applied to the top surface of said substrate;
a substantially transparent coating of a hole conducting material applied over said ITO layer;
a substantially transparent layer of an electron conducting and highly electroluminescent organic material overlaying said ITO layer;
a relatively thin film of a substantially transparent metal electrode applied over said organic material layer;
a second substantially transparent thin film coating of ITO overlying said metal electrode film; and
first and second electrical contacts bonded to said first and second ITO layers for receiving a bias voltage to energize said device, and cause it to emit light of a given color from top and bottom surfaces thereof.

5,703,437

AC PLASMA DISPLAY INCLUDING PROTECTIVE LAYER

Toshihiro Komaki, Koufu, Japan, assignor to Pioneer Electronic Corporation, Tokyo, Japan

Continuation of Ser. No. 506,965, Jul. 28, 1995, abandoned. This application Mar. 13, 1997, Ser. No. 816,883

Claims priority, application Japan, Aug. 31, 1994, 6-207038

Int. Cl.⁶ H01J *1/48;17/04*

U.S. Cl. 313—587 **4 Claims**

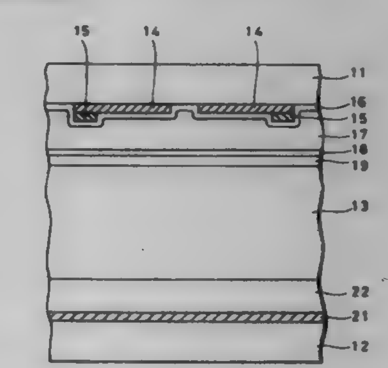

1. An AC type plasma display apparatus comprising:
a plurality of column electrodes;
a plurality of row electrodes spaced from said column electrodes;
a dielectric layer coveting said column electrodes and charging a wail charge, wherein said dielectric layer is made of a low melting point glass including sodium oxide and boron oxide and having a dielectric constant of 8 or less; and
an electrode protective layer to prevent an internal dispersion of sodium from said dielectric layer to said column electrodes, the electrode protective layer being made of an inorganic material and disposed between said column electrodes and said dielectric layer.

5,703,438

LINE CURRENT FILTER FOR LESS THAN 10 TOTAL HARMONIC DISTORTION

Long Thanh Nguyen, El Paso, Tex., assignor to Valmont Industries, Inc., Valley, Nebr.

Filed Jan. 22, 1996, Ser. No. 589,819

Int. Cl.⁶ H02M *1/12*

U.S. Cl. 315—291 **20 Claims**

1. An input filter for filtering the AC input power provided to a voltage rectifier by an AC power source for a circuit for driving a gas discharge lamp load comprising:
first and second mutually coupled coils, said first coil being connected to the AC power source and to a first connection point of the voltage rectifier, said second coil being connected to the AC power source and to a second connection point of the voltage rectifier; and
an impedance circuit connected in parallel to one of said mutually coupled coils, said impedance circuit comprising a first

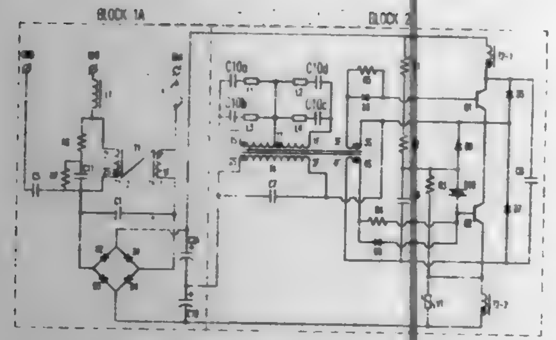

resistive element and a first capacitive element connected in series with each other and a second resistive element connected parallel to said first capacitive element.

5,703,439

LAMP POWER SUPPLY CIRCUIT WITH ELECTRONIC FEEDBACK CIRCUIT FOR SWITCH CONTROL

Louis R. Nerone, Brecksville, Ohio, assignor to General Electric Company, Schenectady, N.Y.

Filed May 10, 1996, Ser. No. 644,466

Int. Cl.⁶ H05B *37/02*

U.S. Cl. 315—209 R **16 Claims**

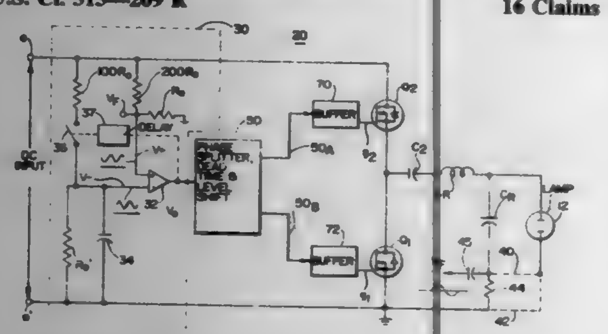

1. A ballast circuit for a gas discharge lamp, comprising:

(a) a resonant load circuit incorporating a gas discharge lamp and including first and second resonant impedances whose values determine the operating frequency of said resonant load circuit;

(b) a d.c.-to-a.c. converter circuit coupled to said resonant load circuit so as to induce an a.c. current in said resonant load circuit, and comprising first and second switches serially connected between a bus conductor at a d.c. voltage and ground, and having a common node through which said bidirectional load current flows; and

(c) a feedback arrangement for regeneratively controlling said first and second switches; said arrangement including a circuit for sensing a.c. current in said resonant load circuit and producing a feedback signal in proportion to said a.c. current; said feedback arrangement further including:

(i) a comparator circuit for comparing said feedback signal with a periodic reference signal, and for producing a comparator output signal that changes state when a first one of the compared signals becomes greater than the second of the compared signals, and that further changes state when the second of the compared signals then becomes greater than the first of the compared signals;

(ii) a circuit for generating said periodic reference signal in response to said comparator output signal; and

(iii) a conditioning circuit receptive of said comparator output signal for controlling said first and second switches.

5,703,440

COMPACT FLUORESCENT LAMP AND BALLAST ARRANGEMENT WITH INDUCTOR DIRECTLY BETWEEN LAMP ENDS

David J. Kachmarik, Strongsville; Thomas F. Soules, Richmond Heights, both of Ohio; Raymond A. Fillion, Niskayuna, N.Y.; Erwin G. Steinbrenner, Parma Heights, Ohio, and Donald W. Kuk, Albany, N.Y., assignors to General Electric Company, Schenectady, N.Y.

Filed May 13, 1996, Ser. No. 647,605

Int. Cl.⁶ H05B *37/02*

U.S. Cl. 315—56 **18 Claims**

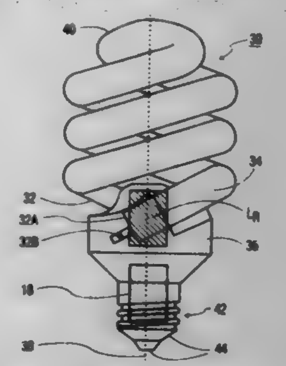

1. A fluorescent lamp and ballast arrangement of the type having a lamp base for connection to a fixture that also accommodates a lamp base of an incandescent lamp, said lamp comprising:

(a) a ballast circuit containing:

(i) a first conversion circuit for converting a.c. voltage to d.c. voltage; said first conversion circuit including an electrolytic capacitor for smoothing said d.c. voltage; and

(ii) a second conversion circuit for converting said d.c. voltage into a.c. current; said second conversion circuit including a resonant inductor and resonant capacitor;

(b) a ballast housing having first and second ends spaced along a longitudinal axis of said housing and being for enclosing parts of said ballast circuit; and

(c) only two lamp tube terminations of said lamp extending into said first end of said ballast housing, with a substantial portion of said resonant inductor being positioned directly between said two lamp tube terminations;

(d) a printed-circuit board positioned within said ballast housing, between said electrolytic capacitor and said resonant inductor, with a first major surface facing toward said electrolytic capacitor and a second major surface facing toward said resonant inductor; said printed-circuit board being dimensioned to convectively shield said capacitor from said inductor and said lamp tube portions;

(e) said lamp base being mounted in fixed relation to said second end of said ballast housing; and

(f) said electrolytic capacitor being positioned at least partially within said lamp base.

5,703,441

MULTI-FUNCTION FILAMENT-HEATER POWER SUPPLY FOR AN ELECTRONIC BALLAST FOR LONG-LIFE DIMMERABLE LAMPS

Robert Louis Steigerwald, Burnt Hills; Chester Frank Saj, Amsterdam, and Ljubisa Dragoljub Stevanovic, Clifton Park, all of N.Y., assignors to General Electric Company, Schenectady, N.Y.

Filed Nov. 2, 1995, Ser. No. 551,968

Int. Cl.⁶ G05F *1/00*

U.S. Cl. 315—307 **9 Claims**

1. A ballast system for at least one dimmable lamp having at least two filaments, comprising:

a ballast inverter for driving said lamp filaments to provide light output:

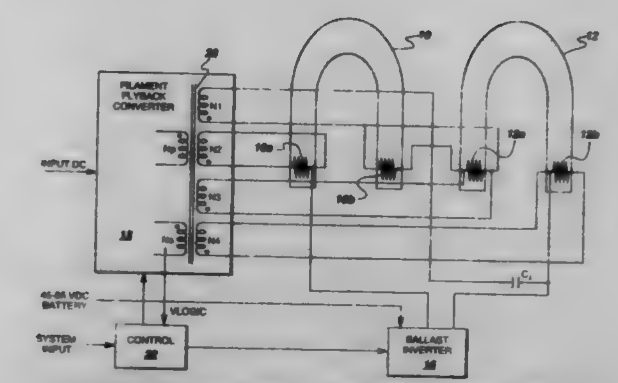

at least one filament-heater power supply coupled through a transformer to said filaments for providing isolated voltages thereto; and

a control circuit coupled to said filament-heater power supply through an additional winding on said transformer, said control circuit controlling said ballast inverter to operate said at least one lamp to provide dimmable light output and for independently controlling said filament-heater power supply to operate at an optimum output filament voltage for any light output level.

5,703,442

METHOD AND APPARATUS FOR INTERFACING A LIGHT DIMMING CONTROL WITH AN AUTOMATED CONTROL SYSTEM

Hubertus Notohamiprodjo, Union City, and Kata Kukiatsakulchai, San Fancisco, both of Calif., assignors to Electronic Lighting Incorporated, Menlo Park, Calif.

Filed Apr. 29, 1996, Ser. No. 638,788

Int. Cl.⁶ G05F *1/00*

U.S. Cl. 315—307 **16 Claims**

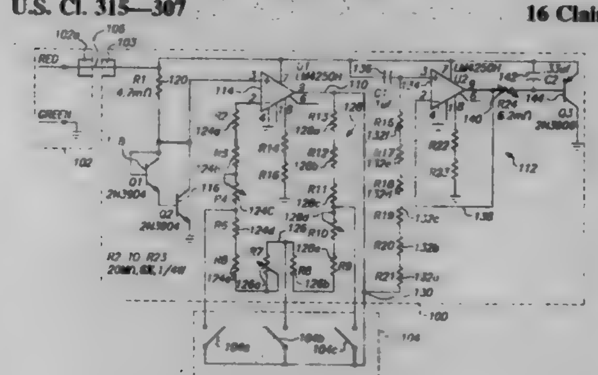

1. Apparatus for interfacing a lighting system with an automated energy control system comprising:

means for receiving energy control signals from an automated energy control system; and

means for converting said energy control signals from said receiving means into lamp intensity control signals to control lamp intensity of at least one light output device of a lighting system in response to a power consumption monitored by the automated energy control system, wherein said converting means includes at least one amplifier stage, said amplifier stage having a feedback path which includes a variable resistance.

5,703,443

HORIZONTAL DEFLECTION OUTPUT CIRCUIT

Joong-Yeol Kwon, Kyungki-do, Rep. of Korea, assignor to SamSung Electronics Co., Ltd., Kyungki-do, Rep. of Korea

Filed Dec. 20, 1996, Ser. No. 770,511

Claims priority, application Rep. of Korea, Mar. 29, 1996, 9316/1996

Int. Cl.⁶ H01Q *1/00*

U.S. Cl. 315—370 **14 Claims**

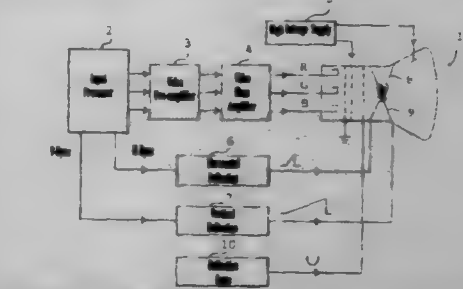

1. A horizontal deflection output circuit for providing a horizontal deflection signal to a deflection yoke of a cathode ray robe to horizontally deflect electron beams in accordance with the horizontal deflection signal, said horizontal deflection output circuit comprising:

a switching transistor responsive to a horizontal output driving pulse signal applied at its base, an emitter of said switching transistor being connected to a ground terminal;

a deflection yoke coupled between a first node at a collector of said switching transistor and a second node;

a S-deflection distortion correcting capacitor coupled between said second node and said ground terminal;

a dampening diode and a retrace capacitor coupled in parallel between said first node and said ground terminal;

a choke coil connected between a voltage source and said second node, said choke coil reducing power loss in said horizontal deflection output circuit; and

a raster position correcting means coupled between said first node and said second node, for correcting a distorted raster position caused by a DC signal, corresponding to said power loss, flowing through said deflection yoke during a trace interval.

5,703,444

SWITCHING DEVICE FOR S CORRECTION CAPACITORS

Dirk J. A. Teuling, and Johannes A. C. Misdom, both of Eindhoven, Netherlands, assignors to U.S. Philips Corporation, New York, N.Y.

Filed Aug. 16, 1995, Ser. No. 515,555

Claims priority, application European Pat. Off., Aug. 18, 1994, 94202346

Int. Cl.⁶ H01J *29/70;29/76*

U.S. Cl. 315—371 **3 Claims**

1. A switching device for S correction capacitors, comprising:

a multiple number of parallel-arranged branches of switches arranged in series with corresponding S correction capacitors, in which the parallel-arranged branches are coupled at one side to a horizontal deflection coil;

a control device provided with a microcomputer and having an input for receiving horizontal synchronizing pulses, said control device having means for detecting a change of a repetition frequency of the horizontal synchronizing pulses, and having outputs for supplying control signals, generated by the microcomputer, for controlling the switches in dependence upon said repetition frequency, said switches being closed if the change of said repetition frequency has been detected, characterized in that the device said means for detecting comprises:

a hardware frequency detector for supplying frequency information related to said repetition frequency; and

a hardware frequency change detector coupled to the hardware frequency detector for supplying an attention pulse to an interrupt input of the microcomputer when a change of the frequency information has been detected.

5,703,445
SAWTOOTH GENERATOR WITH DISTURBANCE SIGNAL REJECTION FOR A DEFLECTION APPARATUS
James Albert Wilber, Indianapolis, Ind., assignor to Thomson Consumer Electronics, Inc., Indianapolis, Ind.
Filed Mar. 29, 1996, Ser. No. 624,287
Int. Cl.^{6} G09G *1/04;* **H01J** *29/70*
U.S. Cl. 315—387 **13 Claims**

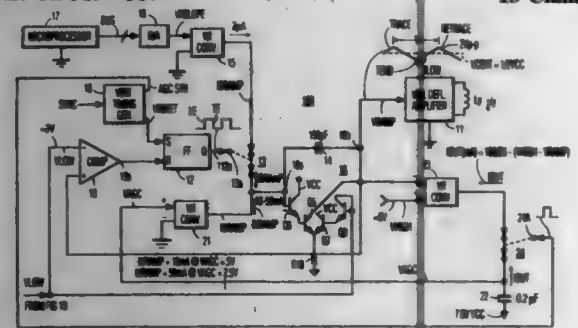

1. A video display apparatus, comprising:
a capacitor;
a switch coupled to said capacitor and responsive to a first control signal for generating in said capacitor a sawtooth signal at a frequency that is related to a deflection frequency, an instant at which a first change in a slope of said sawtooth signal occurs being determined in accordance with said first control signal; and
a comparator for generating said first control signal in accordance with a difference between said sawtooth signal and a reference signal, said sawtooth signal being coupled to a first input of said comparator and said reference signal being coupled to a second input of said comparator and also to said first input of said comparator, a change in said reference signal producing corresponding changes that compensate each other in said first and second inputs of said comparator.

5,703,446
METHOD AND APPARATUS FOR CONTROLLING THE OSCILLATORY MOTION OF A TEST DEVICE
Tien D. Doan, Peoria, Ill., assignor to Caterpillar Inc., Peoria, Ill.
Filed May 22, 1996, Ser. No. 651,254
Int. Cl.^{6} H02K *33/00;* **G01M** *7/00*
U.S. Cl. 318—119 **15 Claims**

1. An apparatus for controlling the oscillatory motion of a device under test, the device having a first end and a second end, and being mounted in a test fixture, comprising:
a base rigidly connectable to said first end of said device under test;
a load actuator connectable to said second end of said device under test;
a drive system connected to said load actuator;
a controller electrically connected to said drive system;
a displacement sensor connected to said drive system, said displacement sensor being adapted for delivering a displacement feedback signal to said controller; and

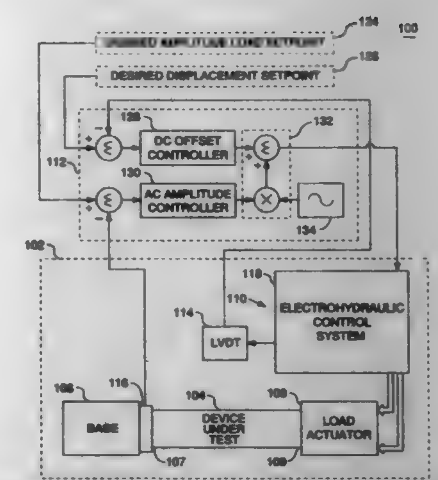

a load sensor connected to said first end of said device under test, said load sensor being adapted for delivering a load amplitude feedback signal to said controller.

5,703,447
BATTERY VOLTAGE CONTROLLER FOR DC MOTOR
Yoshio Higuchi, Daito, Japan, assignor to Funai Electric Co., Ltd., Japan
Filed Apr. 20, 1995, Ser. No. 425,789
Claims priority, application Japan, Apr. 21, 1994, 6-004230 U
Int. Cl.^{6} H02P *5/00*
U.S. Cl. 318—139 **5 Claims**

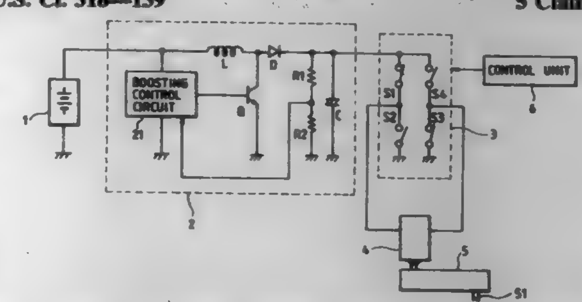

1. A driver for driving a loading motor of a single-unit video camera-recorder, comprising:
a battery;
a DC/DC converter for boosting and outputting a DC voltage supplied from said battery;
a switch unit having a predetermined voltage loss for switching a polarity of the DC voltage received from and boosted by said DC/DC converter; and
a loading motor to which the boosted DC voltage from said DC/DC converter is supplied through said switch unit, said loading motor being provided with a reduction unit for reducing a rotational speed of said loading motor at a predetermined reduction ratio;
said DC/DC converter boosting said DC voltage by an amount corresponding substantially to said voltage loss.

5,703,448
SHUNT-TYPE SPEED CONTROL CIRCUIT HAVING TRANSIENT STORAGE EFFECT FOR A SERIES OR COMPOUND MOTOR
Tai-Her Yang, 5-1 Taipin St., Si-Hu Town, Dzan-Hwa, Taiwan
Continuation of Ser. No. 87,419, Jul. 8, 1993, abandoned. This application Oct. 23, 1995, Ser. No. 546,915
Int. Cl.^{6} H02P *1/18;7/01;* **H02K** *23/00*
U.S. Cl. 318—245 **9 Claims**

1. A shunt-type motor speed control circuit, comprising:
a direct current motor armature;

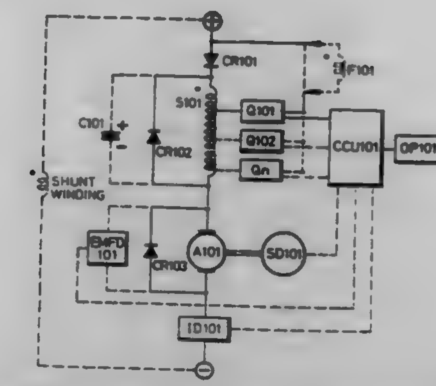

a series field winding having a first end connected to a terminal of a diode and a second end connected to the armature;
at least one tap on the series field winding and at least one switch connected between the tap and a power supply terminal, said diode being connected in series between the power supply terminal and the first end of the series field winding;
means for controlling said switch to selectively connect said tap with said connection point and thereby change the effective turn ratio of said series winding; and
transient energy storage means connected in parallel with the series field winding for enabling the series winding to maintain a stable excitation field during switching of said switch.

5,703,449
CONTROLLER FOR BRUSHLESS DC MOTOR WITHOUT POSITION SENSOR
Takashi Nagate; Akihito Uetake; Yoshikazu Koike, and Kunio Tabata, all of Suwa, Japan, assignors to Seiko Epson Corporation, Tokyo, Japan
Continuation of Ser. No. 330,997, Oct. 28, 1994, abandoned, which is a division of Ser. No. 39,125, Apr. 15, 1993. This application Mar. 14, 1996, Ser. No. 615,073
Claims priority, application Japan, Oct. 19, 1990, 2-281536; Nov. 17, 1990, 2-312305; Nov. 17, 1990, 2-312306; Nov. 20, 1990, 2-315451; Nov. 20, 1990, 2-315452; Nov. 20, 1990, 2-315469; Jun. 21, 1991, 3-150144
Int. Cl.^{6} H02P *5/00*
U.S. Cl. 318—254 **2 Claims**

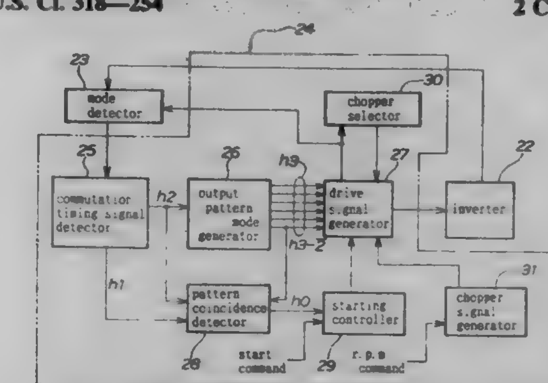

1. A controller for a brushless DC motor without a position sensor including an inverter for driving the motor under chopper control and utilizing a counter electromotive force generated in stator coils of respective phases as a rotor is rotated in order to detect a position of the rotor and thereby to generate a commutation signal, said controller comprising
a mode detector connected to the inverter for detecting
a commutation timing signal detector connected to said mode detector to generate a commutation timing signal,
an output pattern mode generator connected to said commutation timing signal detector to generate output patterns of several types with which said stator coils are excited,
a pattern coincidence detector connected to said commutation timing signal detector and said output pattern mode generator to detect a coincidence that signals output from said commutation timing signal detector and said output pattern mode generator match each other and
a starting controller connected to said pattern coincidence detector to stop a motor drive output once when no coincidence is detected by said pattern coincidence detector and to cause a restarting.

5,703,450
SAFETY GUARD FOR PEDESTRIAN-OPERATED MACHINES HAVING ROTATABLE BLADES
Harold Josephs, 25311 Ronald Ct., Oak Park, Mich. 48237
Continuation-in-part of Ser. No. 514,302, Aug. 11, 1995, Pat. No. 5,653,568, which is a division of Ser. No. 266,726, Jun. 27, 1994, Pat. No. 5,465,807. This application Jun. 19, 1996, Ser. No. 666,904
Int. Cl.^{6} A01D *75/20*
U.S. Cl. 318—379 **10 Claims**

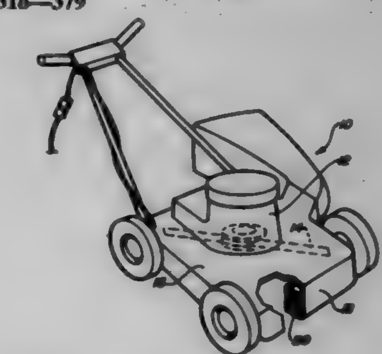

1. A machine comprising:
a housing supported on the ground on a plurality of wheels;
a motor supported by the housing;
a switch connected to the motor, said switch being actuable to selectively stop operation of the motor;
an actuator associated with said switch and secured to a lower portion of the housing and oriented to extend downwardly from the housing toward the ground, said actuator selectively actuating said switch when the housing is moved into contact with an object passing between the housing and the ground which is of sufficient height and mass to move the actuator to actuate the switch; and
a brake that is engaged to stop a moving part driven by the motor when said actuator actuates said switch.

5,703,451
MOTOR DRIVING CIRCUIT
Yoshifumi Yamamichi, Kyoto, Japan, assignor to Rohm Co., Ltd., Kyoto, Japan
Filed Jan. 21, 1997, Ser. No. 785,270
Claims priority, application Japan, Jan. 24, 1996, 8-009925
Int. Cl.^{6} H02H *7/09;* **H03K** *17/16*
U.S. Cl. 318—492 **3 Claims**

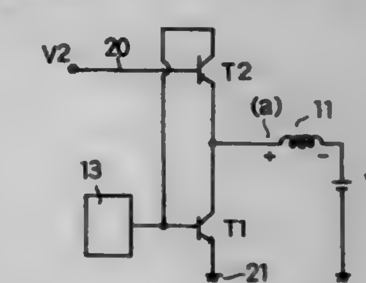

1. A motor driving circuit,

wherein a back electromotive force that is induced at one end of a motor coil at a moment when a current flowing through the motor coil drops to zero as a result of turning off of a drive transistor connected between said end of the motor coil and a ground line is clamped by a pnp-type transistor with its base supplied with a fixed voltage and its emitter connected to said end of the motor coil, and wherein said drive transistor is turned on by a collector current of the pnp-type transistor.

5,703,452

SAFETY ENSURING APPARATUS

Koichi Futsuhara, Urawa, Japan, assignor to The Nippon Signal Co., Ltd., Tokyo, Japan

PCT No. PCT/JP95/00675, § 371 Date Oct. 7, 1996, § 102(e) Date Oct. 7, 1996, PCT Pub. No. WO96/24798, PCT Pub. Date Aug. 15, 1996

PCT Filed Apr. 6, 1995, Ser. No. 718,476

Claims priority, application WIPO, Feb. 7, 1995, PCT/JP95/00165; Mar. 6, 1995, PCT/JP95/00243

Int. Cl.⁶ F16P *3/08;3/10*

U.S. Cl. 318—558 **2 Claims**

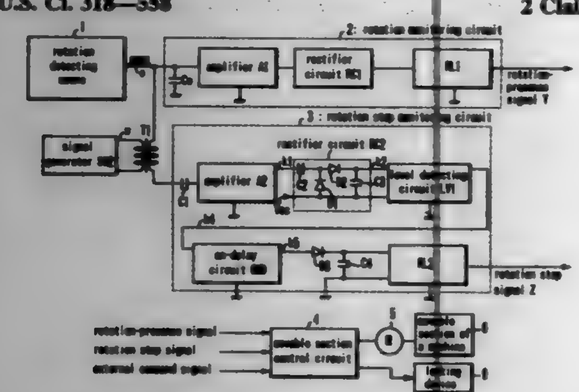

1. A safety ensuring apparatus comprising:
a rotation detecting means detecting rotation of a movable section and outputting a detection signal corresponding to a rotation rate thereof;
a rotation monitoring circuit, to which said detection signal from said rotation detecting means is provided, outputting a rotation-presence signal when said detection signal indicates that said movable section is rotating;
a rotation stop monitoring circuit, to which said detection signal from said rotation detecting means is provided, outputting a rotation stop signal when said detection signal indicates a rotation rate lower than a predetermined rotation rate;
a movable section control circuit using at least either of said rotation-presence signal or said rotation stop signal and an external command signal for input signals, to control said movable section with logic thereof, with;
said movable section being enclosed by a fence and a door at a portion of said fence, and;
said door being provided with a locking device which is controlled by said movable section control circuit, wherein:
said movable section control circuit includes an operating switch, a door switch and a means for switching;
said operating switch outputting either a movable section ON signal or a movable section OFF signal;
said door switch outputting an ON signal which indicates that said door is open, and;
said means for switching constitutes a self-holding circuit which uses an AND signal constituted of said movable section OFF signal from said operating switch and said rotation stop signal as a reset input signal and an OR signal constituted of said ON signal from said door switch and said rotation-presence signal as a trigger signal to provide said locking device with a control signal.

5,703,453

HORIZONTAL STATE CORRECTION CIRCUIT OF A DISK TRANSFERRING DEVICE AND METHOD THEREFOR

Jong Tae An, Kyungki-do, Rep. of Korea, assignor to Samsung Electronics Co., Ltd., Kyungki-do, Rep. of Korea

Filed May 11, 1995, Ser. No. 439,475

Claims priority, application Rep. of Korea, May 12, 1994, 94-10349

Int. Cl.⁶ G11B *5/48*

U.S. Cl. 318—625 **24 Claims**

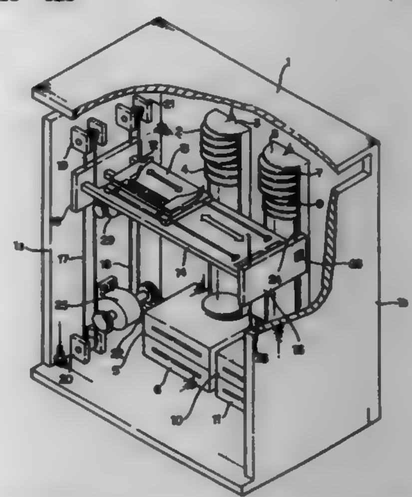

1. An apparatus for correcting a horizontal state of a disk transferring device, wherein the disk transferring device has left and right side frames, comprising:
a correction motor for correcting the horizontal state of the disk transferring device; and
a circuit for detecting an error in the horizontal state of the disk transferring device corresponding to a difference in height between the left and right side frames and driving said correction motor to correct said error in the horizontal state of the disk transferring device by vertically moving at least one of the left and right side frames based on the detected error.

5,703,454

IMAGE READING DEVICE FOR SCANNING A DOCUMENT IN FIRST AND SECOND MODES

Kazushige Taguchi, Warabi, Japan, assignor to Ricoh Company, Ltd., Tokyo, Japan

Filed Dec. 27, 1995, Ser. No. 578,893

Claims priority, application Japan, Dec. 27, 1994, 6-324378

Int. Cl.⁶ H02P *7/00*

U.S. Cl. 318—685 **14 Claims**

1. An image reading device comprising:
a movable scanning mechanism including image reading means;
a pulse motor for driving said movable scanning mechanism;
position sensing means for sensing a position of said movable scanning mechanism;
drive control means for controlling drive of said pulse motor in response to an output signal of said position sensing means;
first monitoring means for monitoring the output signal of said position sensing means at one pulse period for switching a drive phase of said pulse motor;
second monitoring means for monitoring the output signal of said position sensing means at a plurality of pulse periods for switching the drive phase of said pulse motor; and
selection control means for selecting either said first monitoring means or said second monitoring means in accordance with an instantaneous drive condition, and controlling the drive of said pulse motor by using the selected monitoring means.

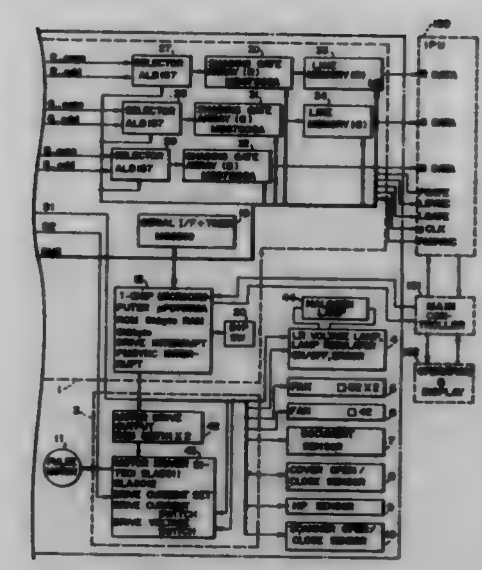

5,703,455

CONTROL DEVICE FOR A STEPPING MOTOR INCLUDED IN AN ELECTRONIC APPARATUS

Hideto Miyazaki, Yokohama, Japan, assignor to Ricoh Company, Ltd., Tokyo, Japan

Filed Sep. 3, 1996, Ser. No. 707,073

Claims priority, application Japan, Sep. 5, 1995, 7-227956

Int. Cl.⁶ H02P *8/00*

U.S. Cl. 318—685 **6 Claims**

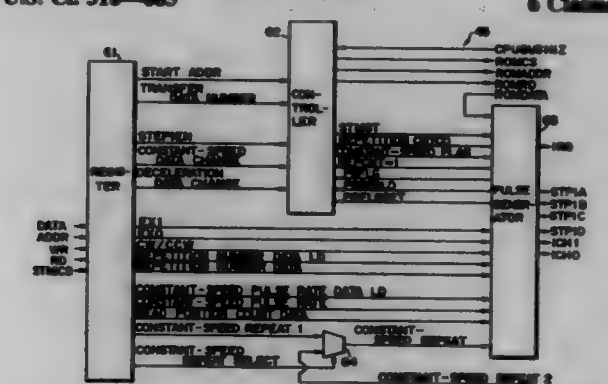

1. A control device for controlling drive of a stepping motor which drives a movable portion of an electronic apparatus and is totally controlled by a microprocessor, said control device comprising:
motor drive means for driving the stepping motor;
store means for storing control data for acceleration, constant-speed drive and deceleration of the stepping motor; and
motor control means for controlling the stepping motor via said motor drive means with said control data loaded without the intermediary of the microprocessor;
said motor control means comprising:
first constant-speed rotation control means for repeatedly loading the control data assigned to the constant-speed drive a preselected number of times to thereby rotate the stepping motor at a constant speed;
second constant-speed rotation control means for repeatedly loading said control data assigned to the constant-speed drive until a constant-speed rotation end signal arrives to thereby rotate the stepping motor at the constant speed; and
constant-speed control selecting means for selecting one of said first and second constant-speed rotation control means at a time.

5,703,456

POWER CONVERTER AND CONTROL SYSTEM FOR A MOTOR USING AN INDUCTIVE LOAD AND METHOD OF DOING THE SAME

Karmen D. Cox, St. Peters, Mo., assignor to Emerson Electric Co., St. Louis, Mo.

Filed May 26, 1995, Ser. No. 452,419

Int. Cl.⁶ H02P *7/36*

U.S. Cl. 318—701 **41 Claims**

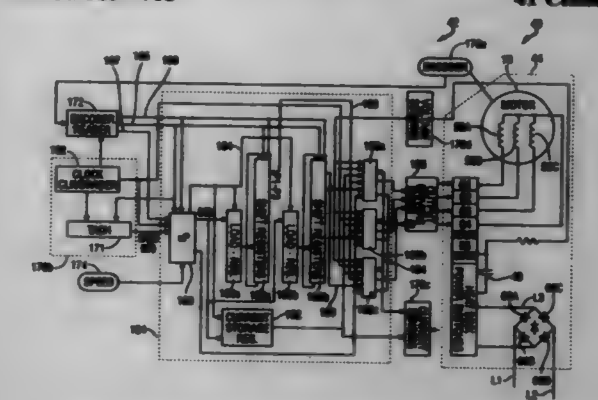

1. A power converter and control system for a motor having an inductive load, said system comprising:
a power converter having a supply bus electrically coupled to said inductive load, said supply bus supplying energy to said inductive load, said power converter having a return bus electrically coupled to said inductive load, said return bus electrically coupled to a storage device for storing energy; and
a controller provides control signals to said power converter, said control signals responsive to operating parameters of the inductive load and the return bus to dynamically activate/deactivate said inductive load.

5,703,457

POWER SUPPLY TO A STATOR OF A POLYPHASE RELUCTANCE MACHINE

Rex Mountford Davis, East Leake, United Kingdom, assignor to Switched Reluctance Drives, Ltd., Harrogate, United Kingdom

Filed Jul. 12, 1995, Ser. No. 501,643

Claims priority, application United Kingdom, Jul. 13, 1994, 9414116

Int. Cl.⁶ H02P *7/00*

U.S. Cl. 318—701 **23 Claims**

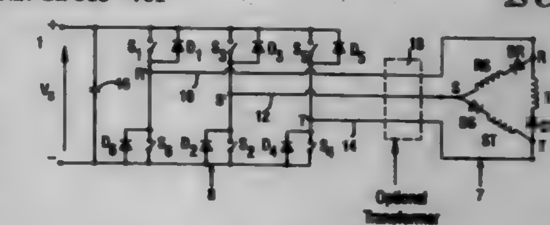

1. A stator for a polyphase reluctance machine comprising a stator body, a phase winding for each phase of the machine, and at least one uni-directional current device connected in series with each phase winding to form a phase unit therewith, the uni-directional current device adapted to carry the main phase winding current of its associated phase winding when the associated phase winding is energized, the phase units being arranged in at least one conducting ring defining nodes of connections between the phase units.

5,703,458
CAPACITOR-TYPE MOTOR SPEED CONTROLLER
Bernard Gershen, Centerport; Edward Krajci, Franklin Square, and Benjamin Neiger, New York, all of N.Y., assignors to Leviton Manufacturing Co., Inc., Little Neck, N.Y.
Filed Jun. 14, 1995, Ser. No. 490,200
Int. Cl.⁶ H02P *5/28*
U.S. Cl. 318—799 **7 Claims**

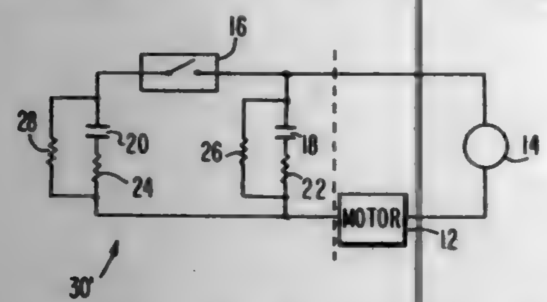

1. A method for controlling the speed of an AC motor driven by an AC source such that minimal audible noise is generated at switching motor speeds, comprising the steps of:
a) connecting an AC motor in series with an AC source;
b) interposing a first impedance comprising a first capacitor in series with a first resistor, in series with said AC motor and said AC source to establish a first AC motor speed; and
c) selectively interposing a second impedance comprising a second capacitor in series with a second resistor in parallel with said first impedance to establish a second AC motor speed, less than said first AC motor speed.

5,703,459
DRIVER FOR AN INDUCTION MOTOR
Masahiro Yasohara, Amagasaki; Yoshihiro Fujisaki, Matsubara, and Kazuyuki Takada, Hirakata, all of Japan, assignors to Matsushita Electric Industrial Co., Ltd., Osaka, Japan
Filed Mar. 5, 1996, Ser. No. 610,826
Claims priority, application Japan, Jul. 12, 1995, 7-175753
Int. Cl.⁶ H02P *5/34;* **H02M** *7/48*
U.S. Cl. 318—808 **6 Claims**

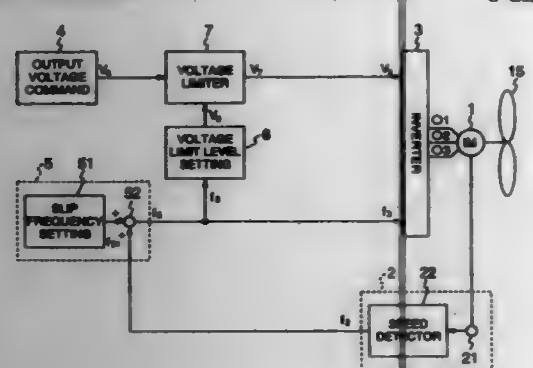

1. A driver for an induction motor comprising:
speed sensing means for sensing a rotational speed of the induction motor;
an invertor circuit for supplying power to the induction motor by an alternating current voltage based on an output voltage command signal and an output frequency command signal;
output voltage command means for giving the output voltage command signal to said invertor circuit;
output frequency command means for applying, as the output frequency command signal to said invertor circuit, a sum of a predetermined slip frequency and a frequency signal depending on the rotational speed of the induction motor and output from said speed sensing means, the driver being driven under slip frequency control,
voltage limit level setting means for setting a upper limit value of an output voltage from said invertor circuit in accordance with an output signal from said output frequency command means or an output signal from said speed sensing means; and
voltage limiter means for limiting the output signal from said output voltage command means in accordance with a set value set by said voltage limit level setting means to limit the upper limit of the output voltage from said invertor circuit, wherein a set level for the upper limit of the output voltage from said invertor circuit is changed in correspondence to a change in the output frequency from said invertor circuit.

5,703,460
SYSTEM FOR CHARGING THE BATTERY OF WATCHES WITHOUT OPENING THE LID
Francisco Planells Almerich, Apartado Correos 148, Valencia, Spain, E-46900
PCT No. PCT/ES95/00122, § 371 Date Sep. 19, 1996, § 102(e) Date Sep. 19, 1996, PCT Pub. No. WO96/14607, PCT Pub. Date May 17, 1996
PCT Filed Nov. 3, 1995, Ser. No. 666,313
Claims priority, application Spain, Nov. 4, 1994, P9402278
Int. Cl.⁶ H01M *10/46;* **G04C** *3/00*
U.S. Cl. 320—2 **7 Claims**

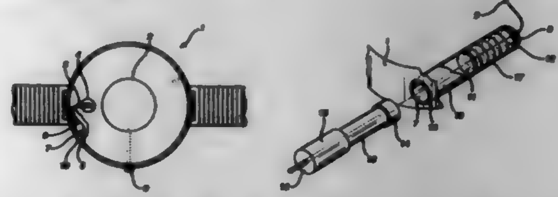

1. A system for charging a button battery of a watertight watch of a type having a body and cover, without taking off the cover, and without altering watertight conditions thereof, in which charging is performed by a voltage drop, while maintaining an amperage through a voltage differential, and with the battery including an anode and cathode, said system comprising:
an anode connection in the watch body for connection to the anode of the battery;
a cathode connection in the watch body for connection to the cathode of the battery;
a first hole in the watch body;
external anode connection means for electrically connecting said anode connection outside said watch, through said hole;
external cathode connection means for electrically connecting said cathode connection outside said watch; and
said external anode connection means and said external cathode connection means have different shapes and sizes so that said anode connection is not accessible through said hole by said external cathode connection means; and
wherein said watch body has a chassis, and said external cathode connection means electrically connects said cathode connection via said chassis.

5,703,461
INDUCTIVE COUPLER FOR ELECTRIC VEHICLE CHARGER
Norimoto Minoshima, and Yasuharu Odachi, both of Aichi-ken, Japan, assignors to Kabushiki Kaisha Toyoda Jidoshokki Seisakusho, Kariya, Japan
Filed Jun. 27, 1996, Ser. No. 671,218
Claims priority, application Japan, Jun. 28, 1995, 7-162521; Jun. 28, 1995, 7-162523
Int. Cl.⁶ H01M *10/46;* **H01F** *27/06*
U.S. Cl. 320—2 **10 Claims**

1. An inductive coupler in a battery charging system for an electric vehicle comprising a primary device having a primary coil for connection to a power source, and a secondary device for

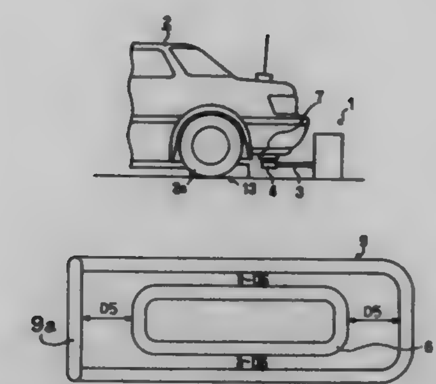

mounting on said vehicle and having a secondary coil for coupling to a battery in said vehicle, said primary and secondary devices being assembleable with one of said primary and secondary coils being insertable within an open space defined by the other of said primary and secondary coils for coupling said coils electromagnetically to induce an electromotive force in said secondary coil upon establishing a current in said primary coil in the assembled condition of the coupler, said other of said primary and secondary coils being formed and sized larger than said one of said primary and secondary coils at least along a predetermined axis to provide a first clearance at least in the direction of said predetermined axis between said coils when assembled, said first clearance in the direction of said predetermined axis being greater than any clearance in the direction orthogonal to said predetermined axis, and means for mounting said primary device adjacent a space for parking said vehicle with means for moving said primary device at least horizontally into a selectable position for engaging and assuming said assembled condition with said secondary device.

5,703,462
INDUCTIVE COUPLER ASSEMBLY HAVING ITS PRIMARY WINDING FORMED IN A PRINTED WIRING BOARD
George R. Woody, Redondo Beach, and Scott D. Downer, Torrance, both of Calif., assignors to Delco Electronics Corp., Kokomo, Ind.
Filed Jul. 15, 1996, Ser. No. 679,587
Int. Cl.⁶ H02J *7/04*
U.S. Cl. 320—2 **5 Claims**

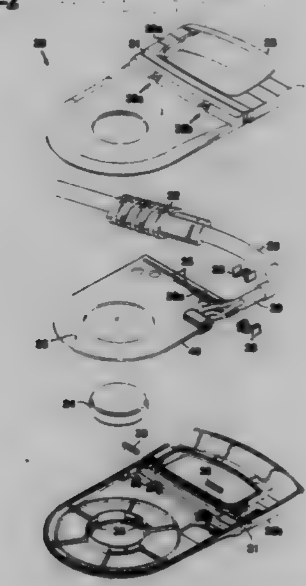

1. An inductive charging coupler for use with inductive charging apparatus comprising a power source and a charge port disposed in an electric vehicle that is coupled to a battery of the electric vehicle, and wherein the coupler is insertable into the charge port to couple power from the power source to charge the battery of the electric vehicle, said coupler comprising:
a center magnetic core;
a printed wiring board disposed around the center magnetic core that comprises a plurality of printed circuit layers that each have a predetermined printed circuit pattern that together form a primary winding, and an antenna formed as an electrical trace on a selected one of said printed circuit layers;
a cable coupled between selected printed circuit layers of the primary winding and a power source for coupling energy to the charging coupler 20; and
a coupler housing that has two mating coupler halves that are configured to provide a handle, and wherein the mating coupler halves enclose the printed wiring board, secure the center magnetic core, and secure the cable in the handle.

5,703,463
METHODS AND APPARATUS FOR PROTECTING BATTERY CELLS FROM OVERCHARGE
Gregory J. Smith, Tucson, Ariz., assignor to National Semiconductor Corporation, Santa Clara, Calif.
Filed Feb. 18, 1997, Ser. No. 801,162
Int. Cl.⁶ H01M *10/46*
U.S. Cl. 320—13 **53 Claims**

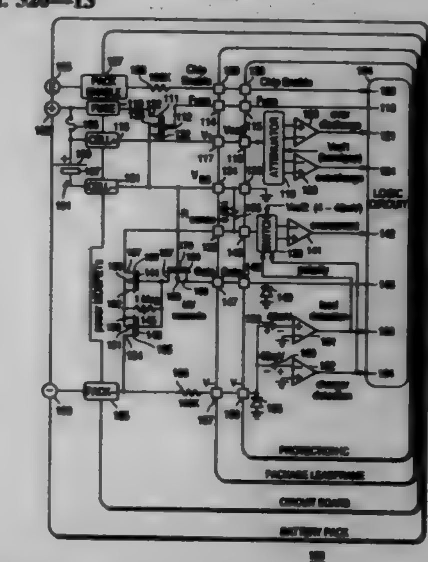

22. A method of protecting at least one rechargeable battery cell from overcharge, comprising the steps of:
monitoring a potential across the at least one rechargeable battery cell, and if the potential exceeds a predetermined value for at least a first predetermined period, decoupling the at least one rechargeable battery cell from one of a plurality of output nodes, one output node coupled to a first polarity terminal of the rechargeable battery cell and another output node coupled to a second polarity terminal of the rechargeable battery cell; and
monitoring the potential across the at least one rechargeable battery cell, and if the potential continues to exceed the predetermined value for at least a second predetermined period, further decoupling the at least one rechargeable battery cell from one of the plurality of output nodes.

5,703,464
RADIO FREQUENCY ENERGY MANAGEMENT SYSTEM
Tissa R. Karunasiri, Van Nuys; David A. Bell, Altadena, and Bruce M. Ryan, West Hills, all of Calif., assignors to Amerigon, Inc., Irwindale, Calif.
Filed Jun. 28, 1995, Ser. No. 495,984
Int. Cl.⁶ H01M *10/44*
U.S. Cl. 320—19 **44 Claims**

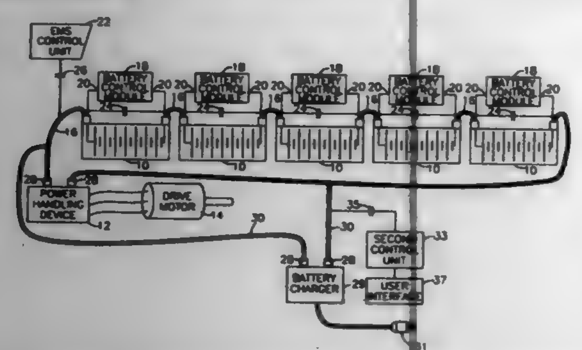

1. An energy management system for use with an electrically powered apparatus, the system comprising:
a number of battery control modules on the apparatus, wherein each battery control module includes:
means for monitoring an operating parameter of an electric power source for the apparatus selected from the group consisting of a battery pack, at least one battery in a battery pack, at least one cell in a battery, and combinations thereof;
means for receiving a radio frequency signal;
means for transmitting a radio frequency signal; and
a control unit on the apparatus configured to monitor and control the battery control modules by radio frequency signal, wherein the control unit includes:
means for receiving a radio frequency signal transmitted from each battery control module; and
means for transmitting a radio frequency control signal to each battery control module;
wherein the receiving and transmitting means for the control unit and each battery control module is connected to a common conductive transmission medium disposed between the electric power source and a power handling device in the electrically powered apparatus.

5,703,465
METHOD AND APPARATUS FOR CONTROLLING THE CHARGING OF A SECONDARY BATTERY USING THE PRIMARY DIFFERENTIAL OF THE BATTERY VOLTAGE
Naoki Kinoshita, and Kazuya Oozono, both of Wako, Japan, assignors to Honda Giken Kogyo Kabushiki Kaisha, Tokyo, Japan
Filed May 29, 1996, Ser. No. 655,003
Claims priority, application Japan, May 31, 1995, 7-134324
Int. Cl.⁶ H01M *10/44;10/46*
U.S. Cl. 320—22 **16 Claims**

1. A method of controlling the charging of a secondary battery, comprising the steps of:
deciding whether or not a quadratic differential of a voltage across the secondary battery while the secondary battery is being charged reaches at least a predetermined value;
if said quadratic differential reaches at least the predetermined value, charging the secondary battery with a large current until a primary differential of the voltage across the secondary battery reaches a threshold therefor which is established depending on a temperature of the secondary battery; and

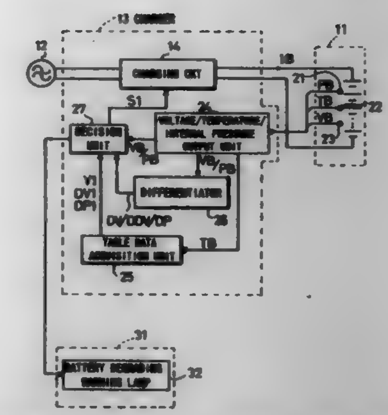

terminating charging of the secondary battery with the large current when the primary differential of the voltage across the secondary battery reaches the threshold therefor.

5,703,466
CHARGING CONTROL APPARATUS
Kensuke Honda; Hiroshi Murakami, and Kazunori Watanabe, all of Wako, Japan, assignors to Honda Giken Kogyo Kabushiki Kaisha, Tokyo, Japan
Filed Aug. 2, 1996, Ser. No. 691,653
Claims priority, application Japan, Aug. 2, 1995, 7-197753
Int. Cl.⁶ H02J *7/00;* **H01M** *10/46*
U.S. Cl. 320—23 **6 Claims**

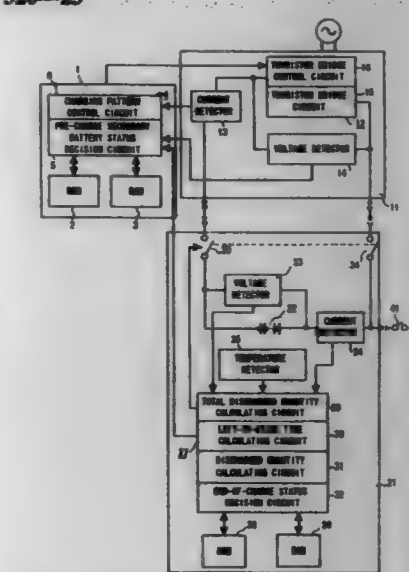

1. A charging control apparatus for charging a secondary battery, comprising:
a decision circuit for determining a discharged status of a secondary battery prior to when the secondary battery starts being charged; and
a charging pattern control circuit for controlling a charging current supplied to the secondary battery at progressively smaller constant stepwise levels according to a charging pattern based on the discharged status of the secondary battery as determined by said decision circuit each time a voltage across the secondary battery reaches a first predetermined value, and charging the secondary battery with the charging current which is controlled at said progressively smaller constant stepwise levels.

5,703,467
APPARATUS FOR EXPANDING BATTERY RECOGNITION IN A BATTERY CHARGING SYSTEM
Joseph Patino, Pembroke Pines, Fla., assignor to Motorola, Inc., Schaumburg, Ill.
Filed Oct. 4, 1996, Ser. No. 726,567
Int. Cl.⁶ H02J *7/10*
U.S. Cl. 320—106 **2 Claims**

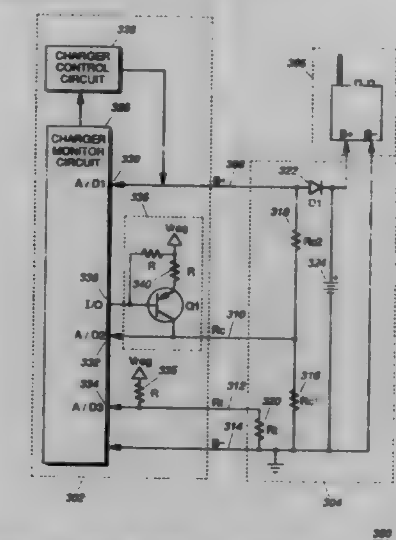

1. A battery charging system, comprising:
a charger circuit, including:
a positive charging terminal;
a negative charging terminal;
a control circuit for controlling a charge current:
a monitor circuit having an analog to digital converter (A/D) port; and
a switching circuit for switching a pull up resistor on to and off of the A/D port:
a battery having a predetermined battery type, including:
a positive charging contact for coupling to the positive charging terminal of the charger;
a negative charging contact for coupling to the negative charging terminal of the charger;
a first resistor coupled to the positive charging contact:
a second resistor coupled to the negative charging contact, said first and second resistors coupled in series and providing a voltage divider for coupling to the A/D port of the charger; and
the A/D port determining the value of the second resistor when the charge current from the control circuit is disabled and the switching circuit switches the pull up resistor on to the A/D port, and the A/D port determining the value of the first resistor when the charge current from the control circuit is enabled and the switching circuit switches the pull up resistor off of the A/D port, the first and second resistor values providing a range within which the A/D port determines the predetermined battery type.

5,703,468
ELECTRICAL CHARGE CONTROL APPARATUS AND METHOD FOR PHOTOVOLTAIC ENERGY CONVERSION SYSTEMS
Gino A. Petrillo, 176 Tower St., Beaconsfield, Quebec, Canada, H9W 6B2
Filed Mar. 15, 1996, Ser. No. 616,965
Claims priority, application WIPO, Mar. 17, 1995, PCT/CA95/00137
Int. Cl.⁶ H02J *7/00;* **H01M** *10/44*
U.S. Cl. 320—39 **54 Claims**

14. A charge control apparatus for controlling the charging of a rechargeable electrical energy storage device by an electrical

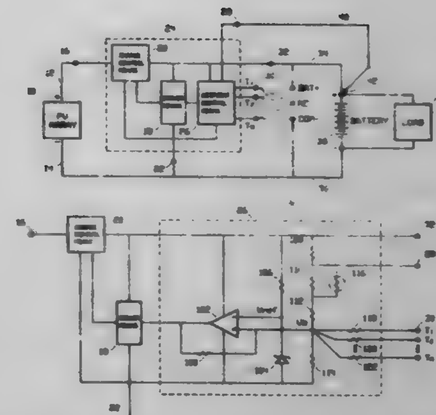

energy source, said source having charging output terminals and said storage device having charging input terminals, said apparatus interposed between said source and said storage device, the improvement comprising means for selecting a particular charge setpoint condition, including charge termination and resumption voltage thresholds, from a plurality of charge setpoint possibilities.

5,703,469
SYSTEM FOR DETERMINING BATTERY CONDITIONS
Naoki Kinoshita, Wako, Japan, assignor to Honda Giken Kogyo Kabushiki Kaisha, Tokyo, Japan
Filed May 30, 1996, Ser. No. 655,767
Claims priority, application Japan, Jun. 5, 1995, 7-138340
Int. Cl.⁶ H01M *10/48;* **G01N** *27/416*
U.S. Cl. 320—48 **16 Claims**

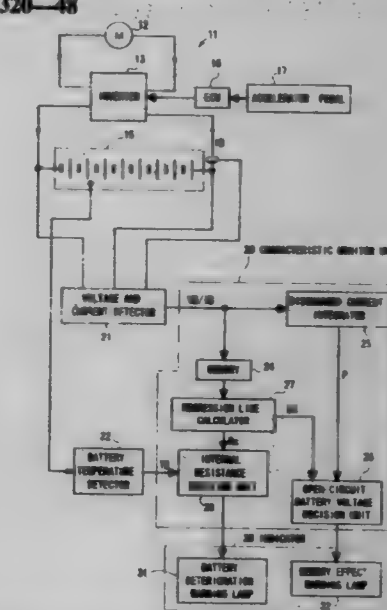

1. A system for determining conditions of a nickel-based secondary battery mounted as a power unit on an electrically propelled vehicle, comprising:
a voltage sensor for detecting a voltage across the battery,
a current sensor for detecting a current flowing from the battery to a load:
a memory for storing the detected values of the voltage and current from said voltage sensor and said current sensor at a plurality of times while the battery is being discharged: and
processing means for calculating an internal resistance and an open-circuit voltage of the battery based on the detected values stored in said memory, determining a deterioration of the battery based on the internal resistance, and determining a memory effect on the battery based on the open-circuit voltage

5,703,470

BATTERY CHARGER WITH POWER DISSIPATION CONTROL

Robert Baranowski, Crystal Lake, and Matthew Whiting Taylor, Gurnee, both of Ill., assignors to Motorola, Inc., Schaumburg, Ill.

Filed May 29, 1996, Ser. No. 657,699

Int. Cl.⁶ H01M *10/46*

U.S. Cl. 320—49 **20 Claims**

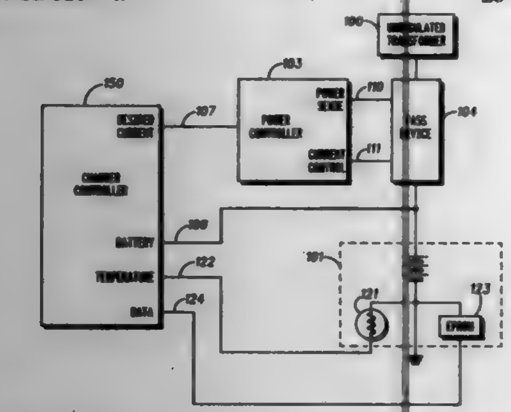

1. A battery charger comprising:

a pass device configured for connection to an unregulated transformer;

a charger controller configured for connection to a battery for calculating a desired battery charging current value based on a battery voltage;

a power controller connected to the charger controller and connected to the pass device for converting the desired battery charging current value from the charger controller to a current control signal based on an instantaneous power dissipation of the pass device.

5,703,471

BATTERY PROTECTION CIRCUITRY FOR LIMITING CHARGING PARAMETERS OF A BATTERY PLANT

Norma Kathryn Bullock, Rockwall, Tex., and Douglas G. Fent, San Mateo, Calif., assignors to Lucent Technologies Inc., Murray Hill, N.J.

Filed Mar. 11, 1996, Ser. No. 614,063

Int. Cl.⁶ H01M *10/46*

U.S. Cl. 320—51 **20 Claims**

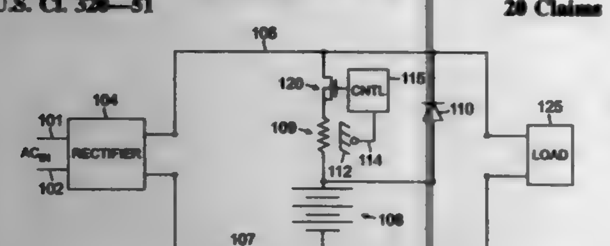

1. In a circuit for charging a battery, a control circuit, comprising:

means for applying a DC voltage to the battery; and

means for controlling the DC voltage and a charging current applied to the battery, including:

a resistive device connected to a battery terminal to limit charging current applied to the battery despite degeneration of internal battery resistance; and

means for further limiting charging current in response to a measured temperature related to the resistive device.

5,703,472

VOLTAGE REGULATOR OF VEHICLE ALTERNATOR

Tooru Aoyama, Okazaki; Shigeru Tanaka, Kariya, and Kouzi Tanaka, Anjo, all of Japan, assignors to Nippondenso Co., Ltd., Kariya, Japan

Filed Apr. 22, 1996, Ser. No. 635,580

Claims priority, application Japan, Apr. 28, 1995, 7-106430

Int. Cl.⁶ H02J *7/04*

U.S. Cl. 322—28 **13 Claims**

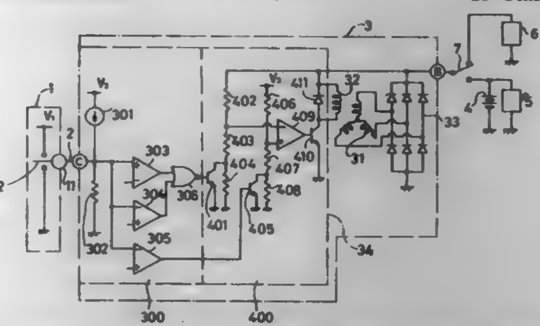

1. A voltage regulator for controlling a field current of a vehicle alternator which generates a battery charging voltage and a specific output voltage different from said battery charging voltage according to signal levels of an external control signal, said voltage regulator comprising:

an input terminal for receiving said external control signal;

means, connected to said input terminal, for setting a terminal voltage corresponding to said battery charging voltage if said external control signal is not received;

means, connected to said input terminal, for discriminating a specific signal level from said signal levels of said external control signal; and

field current controlling means, connected to said voltage discriminating means, for controlling said field current of said alternator to generate said specific output voltage responsive to said discriminating means discriminating that said signal level of said external control signal at said input terminal has said specific signal level and to generate said battery charging voltage responsive to said discriminating means not discriminating that said signal level of said external control signal at said input terminal has said specific signal level.

5,703,473

PROGRAMMABLE PWM OUTPUT VOLTAGE INDEPENDENT OF SUPPLY

Timothy A. Phillips, Cranston, and J. Eric Lindberg, East Greenwich, both of R.I., assignors to Cherry Semiconductor Corporation, East Greenwich, R.I.

Filed Jun. 27, 1996, Ser. No. 672,267

Int. Cl.⁶ G05F *1/565*

U.S. Cl. 323—282 **35 Claims**

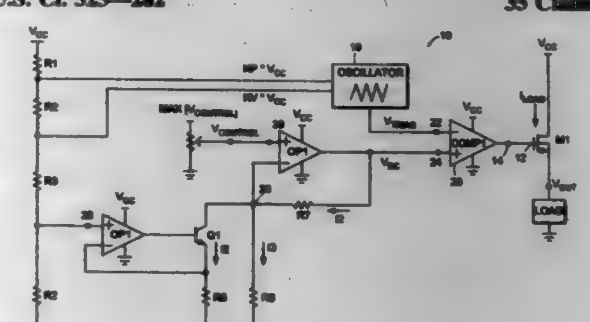

1. A pulse width modulator comprising:

a supply means for receiving a power supply voltage;

a comparator having a first input and a second input for providing a square wave output;

an oscillator, coupled to the first input of the comparator, for supplying a periodic ramp voltage having a peak proportional to the power supply voltage;

an operational amplifier coupled to the supply means and having a feedback loop;

a transistor included in the feedback loop so that the operational amplifier and the transistor provide a signal proportional to the power supply voltage; and

a summing means, connected to receive the signal proportional to the power supply voltage and a control signal, for supplying a linear combination of the control signal and the power supply voltage to the second input of the comparator.

5,703,474

POWER TRANSFER OF PIEZOELECTRIC GENERATED ENERGY

Paul Smalser, Hamilton Twsp., N.J., assignor to Ocean Power Technologies, West Trenton, N.J.

Filed Oct. 23, 1995, Ser. No. 546,599

Int. Cl.⁶ G05F *5/00*

U.S. Cl. 323—299 **24 Claims**

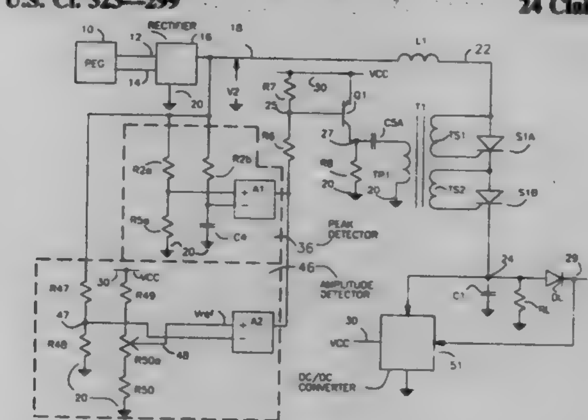

1. A combination comprising:

a piezoelectric generator (PEG) having first and second terminals across which an alternating current (AC) electrical signal is generated when the PEG is stressed;

rectifying means having an input means coupled across said first and second terminals of said PEG and having an output means for producing thereat a rectified output signal corresponding to said generated AC electrical signal;

means connecting a switch means in series with an inductor and a charge storage means across the output means of the rectifying means; and

enabling means coupled to said switch means for selectively enabling said switch means, said enabling means including means for sensing the amplitude of the voltage at the output of the rectifying means and for sensing when the amplitude of the voltage has peaked and for then producing a turn-on pulse to enable said switch means and causing the inductor and charge storage means to be connected in circuit with said PEG for absorbing and storing the electrical energy generated by the PEG.

5,703,475

REFERENCE VOLTAGE GENERATOR WITH FAST START-UP AND LOW STAND-BY POWER

Kyu-Chan Lee, Seoul, and Jai-Hoon Sim, Kyungki-do, both of Rep. of Korea, assignors to Samsung Electronics Co., Ltd., Suwon, Rep. of Korea

Filed Jun. 24, 1996, Ser. No. 671,145

Claims priority, application Rep. of Korea, Jun. 24, 1995, 1995 17364

Int. Cl.⁶ G05F *3/16*

U.S. Cl. 323—313 **19 Claims**

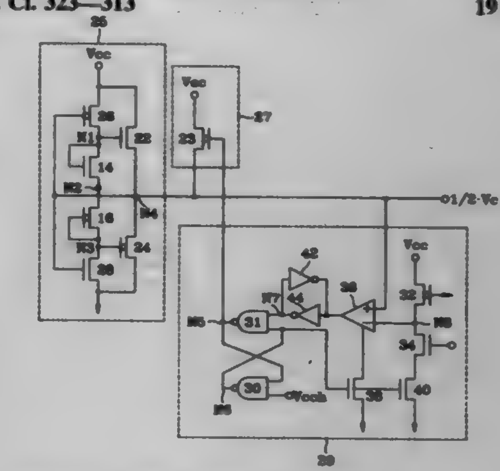

1. A reference voltage generator comprising:

a reference stage which generates a reference voltage signal;

a controller coupled to the reference stage to receive the reference voltage signal, the controller generating a control signal responsive to the reference voltage signal; and

a pull-up stage coupled to the controller to receive the control signal and coupled to the reference stage to pull up the reference voltage signal responsive to the control signal, the pull-up stage being capable of being switched off during normal operation;

wherein the controller switches the pull-up stage off when the reference signal reaches a predetermined voltage.

5,703,476

REFERENCE VOLTAGE GENERATOR, HAVING A DOUBLE SLOPE TEMPERATURE CHARACTERISTIC, FOR A VOLTAGE REGULATOR OF AN AUTOMOTIVE ALTERNATOR

Mauro Merlo, Torre D'Isola-Pavia; Franco Cocetta, Premariacco; Fabio Marchió , Sedriano; Massimo Grasso, Asti, and Bruno Murari, Monza-Milano, all of Italy, assignors to SGS-Thomson Microelectronics, S.r.l., Agrate Brianza, Italy

Filed Jul. 1, 1996, Ser. No. 674,321

Claims priority, application European Pat. Off., Jun. 30, 1995, 95830280

Int. Cl.⁶ G05F *3/16*

U.S. Cl. 323—313 **26 Claims**

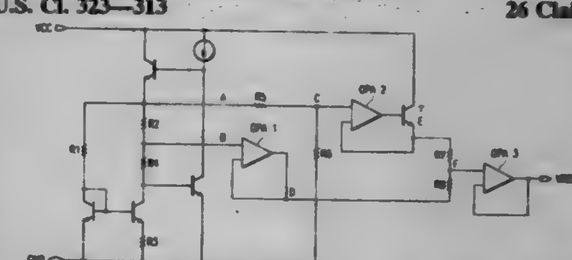

1. A reference voltage generator having a dual slope temperature characteristic and being integratable monolithically, for use in a voltage regulator, characterized in that it comprises a circuit means effective to generate a first voltage having a thermal drift coefficient of zero and a second voltage having a predetermined nonzero thermal drift coefficient, a first voltage divider and first

voltage-follower circuit which are respectively applied said first and second voltages, a unidirectional conduction amplifier circuit having an input terminal connected to an intermediate node of the first voltage divider, and a second voltage divider connected between an output terminal of the amplifier circuit and an output terminal of the voltage-follower circuit, an intermediate node of said second voltage divider being coupled to an output terminal of the generator.

5,703,477
CURRENT DRIVER CIRCUIT WITH TRANSVERSE CURRENT REGULATION
Manfred Punzenberger, Gallneukirchen, Austria, assignor to Siemens Aktiengesellschaft, Munich, Germany
Filed Sep. 12, 1996, Ser. No. 713,248
Claims priority, application Germany, Sep. 12, 1995, 195 33 768.9
Int. Cl.⁶ G05F *3/16*
U.S. Cl. 323—313 **6 Claims**

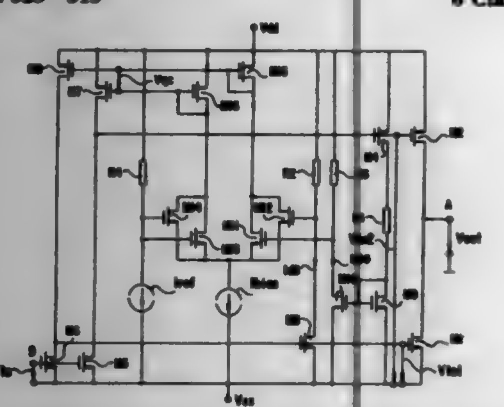

1. A current driver circuit with transverse current regulation, comprising:
supply voltage terminals;
at least two complementary output transistors having gate and source terminals and having main current paths, said main current paths being interconnected at a connecting node and being connected in series between said supply voltage terminals;
an output terminal connected to said connecting node;
current polling transistors each having a gate terminal connected to the gate terminal of a respective one of said output transistors and each having a source terminal connected to the source terminal of a respective one of said output transistors;
a differential amplifier having one branch controlled by signals derived from said current polling transistors and another branch controlled by a reference signal;
first and second current paths each having one input transistor with coupled gate terminals and each having a center pickup controlling a respective one of said output transistors; and
current mirrors each coupling one of said branches of said differential amplifier into a respective one of said current paths.

5,703,478
CURRENT MIRROR CIRCUIT
William Eric Main, Mesa, Ariz., assignor to Motorola, Inc., Schaumburg, Ill.
Filed Apr. 5, 1996, Ser. No. 628,307
Int. Cl.⁶ G05F *3/04;3/16*
U.S. Cl. 323—315 **19 Claims**

1. A current mirror having an input for receiving a reference current and an output for providing an output current, the current mirror comprising:

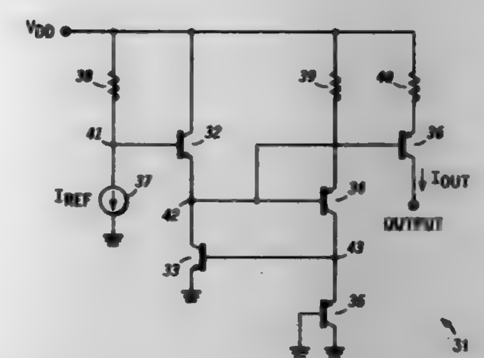

a first resistor having a first terminal coupled to a first power supply terminal and a second terminal coupled to the input of the current mirror;
a first transistor of a first conductivity type having a first electrode coupled to said first power supply terminal, a control electrode coupled to the input of the current mirror, and a second electrode;
a second transistor of a second conductivity type having a first electrode, a control electrode coupled to said second electrode of said first transistor, and a second electrode;
a second resistor having a first terminal coupled to said second electrode of said second transistor and a second terminal coupled to said first power supply terminal;
a third transistor of said first conductivity type having a first electrode coupled to said second electrode of said first transistor, a control electrode coupled to said first electrode of said second transistor, and a second electrode coupled to a second power supply terminal; and
a fourth transistor of said second conductivity type having a first electrode coupled to said second power supply terminal, a control electrode coupled to said second power supply terminal, and a second electrode coupled to said first electrode of said second transistor.

5,703,479
METHOD AND APPARATUS FOR FAULT ISOLATION BY A COMMUNICATION SYSTEM TESTER
Alfred B. Wieczorek, Plantation, Fla.; Thomas Mark Jones, Roanoke, Tex., and Michael Kent Sprenger, Mesa, Ariz., assignors to Motorola, Inc., Schaumburg, Ill.
Filed Dec. 2, 1994, Ser. No. 348,386
Int. Cl.⁶ G01R *15/00;* **H03G** *5/00*
U.S. Cl. 324—73.1 **4 Claims**

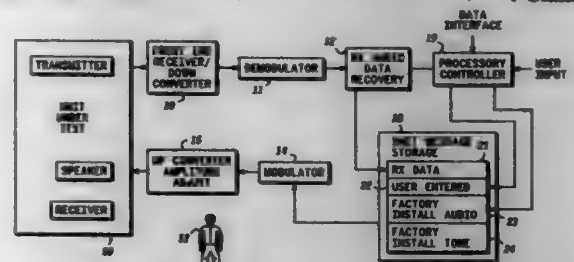

1. A method for testing a unit under test, said method performed by a communication system tester coupled to said unit under test, said method comprising the steps of:
transmitting by said communication system tester a stored message to said unit under test;
determining by an operator whether said stored message is output on a speaker of the unit under test;
inputting by the communication system tester an audio signal selected by the operator to the unit under test, if the operator verified that said stored message was output on the speaker of said unit under test;

sending back by said unit under test a processed audio signal to the communication system tester, said processed audio signal being derived from the audio signal;
capturing by the communication system tester the processed audio signal;
transmitting the captured, processed audio signal to the unit under test; and
determining by said operator whether the captured, processed audio signal was properly produced on a speaker of the unit under test.

5,703,480
METHOD AND ARRANGEMENT FOR DETERMINING THE PHASE DIFFERENCE BETWEEN CLOCK SIGNALS IN A COMMUNICATION EQUIPMENT
Eduard Zwack, Puchheim, Germany, assignor to Siemens Aktiengesellschaft, Munich, Germany
Filed Jan. 19, 1996, Ser. No. 588,682
Claims priority, application Germany, Jan. 31, 1995, 195 03 035.4
Int. Cl.⁶ H03K *5/26;* **G01R** *29/18*
U.S. Cl. 324—76.82 **10 Claims**

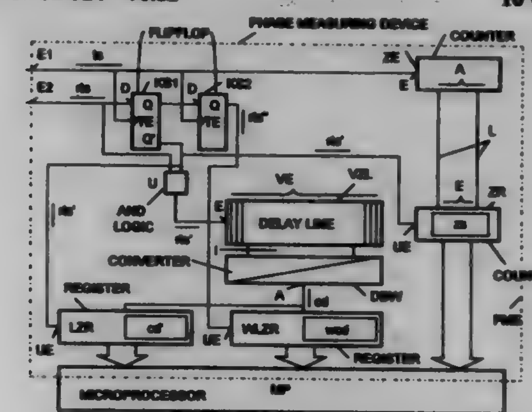

6. An arrangement for determining the phase difference between a first clock signal and a reference clock signal, comprising:
a counter that counts first clock signals, whereby each result of counting is represented by a counter reading;
a count register that respectively accepts a current counter reading at points in time determined by reference clock signals and synchronized to the first clock signals;
a delay line formed by series-connected delay elements, the delay line being traversed by the reference clock signals;
a first run time register that respectively accepts first run time information representing the number of delay elements traversed by the reference clock signal at points in time defined by a following first clock signal;
a second run time register that accepts a second run time information representing the number of delay elements traversed during a cycle of the first clock signal;
a microprocessor structured such that the absolute delay time of a delay element is calculated using the second run time information and the duration of a cycle of the first clock signal, such that the absolute run time information is calculated using the absolute delay time of a delay element, and such that the phase difference is determined using the stored counter reading and of the absolute run time information.

5,703,481
APPARATUS FOR DETECTING DIGITAL CARRIER SIGNALS ON TELEPHONE CABLES
Charles H. Wiseman, Oceanside, Calif., assignor to Tempo Research Corporation, Vista, Calif.
Division of Ser. No. 206,441, Mar. 4, 1994, Pat. No. 5,522,702. This application May 8, 1996, Ser. No. 646,929
Int. Cl.⁶ G01R *19/16*
U.S. Cl. 324—127 **4 Claims**

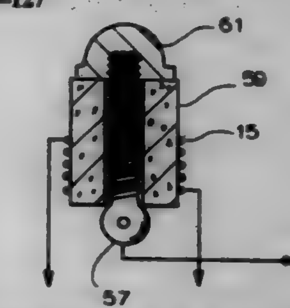

1. A sensor for permitting a signal carried on a tested conductor to be either inductively or capacitively coupled, in non-intrusive manner, onto first or second output conductors, said sensor comprising:
an at least partially hollow material having high magnetic permeability wound by a first output conductor, said partially hollow material permitting a signal carried on a tested conductor to be inductively coupled onto said first output conductor; and
a conductive material inserted at least partially within said partially hollow material and connected to a second output conductor, said conductive material permitting a signal carried on a tested conductor to be capacitively coupled onto said second output conductor.

5,703,482
APPARATUS FOR TESTING ELECTRONIC DEVICES IN HOSTILE MEDIA
Jerry D. Cripe, Tempe; Theresa Ann Mandle; Charles L. Reed, both of Phoenix, and Michael P. Menchio, Mesa, all of Ariz., assignors to Motorola, Inc., Schaumburg, Ill.
Filed Aug. 1, 1994, Ser. No. 283,435
Int. Cl.⁶ G01R *31/26*
U.S. Cl. 324—158.1 **19 Claims**

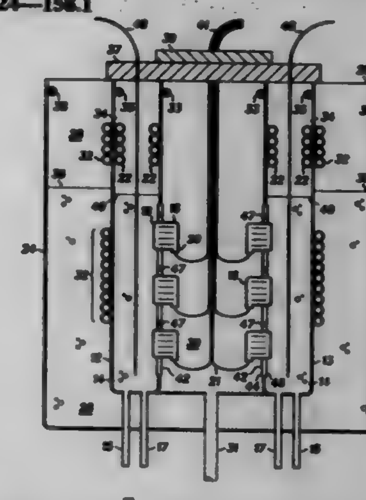

16. An apparatus for testing electronic devices in a hostile medium comprising:
an oxygen free isolation tank filled to a first level with fluorinated hydrocarbon liquid, the oxygen free isolation tank including a plurality of gas purge lines that provide a first positive pressure within the oxygen free isolation tank and a plurality of isolation tank cooling elements positioned in the oxygen free isolation tank;

an oxygen free test tank contained at least partially within the oxygen free isolation tank, the oxygen free test tank filled to a second level with the hostile medium, the oxygen free test tank including test tank cooling elements capable of providing reflux of the hostile medium;

a loading chamber adjacent to the oxygen free test tank, the loading chamber having a wall coupling the loading chamber to the oxygen free test tank;

a modular test plate fastened to the wall of the loading chamber, the modular test plate having a test tank side and a loading chamber side; and

a plurality of electronic devices coupled to the modular test plate on the loading chamber side, at least portions of the plurality of electronic devices emerging from the test tank side of the modular test plate to be exposed to the hostile medium.

5,703,483

PULSE TACHOMETER WITH SENDER CONNECTED TO INDUCTIVE PROXIMITY SENSOR

Patrick Bernard, Limours, and Jean-Pierre Atton, Paray Vieille Poste, both of France, assignors to Electricite de France-Service National, Paris, France

Filed Aug. 31, 1995, Ser. No. 521,983

Claims priority, application France, Sep. 1, 1994, 94 10533

Int. Cl.[6] G01P *3/44;3/487;3/488;* **H04B** *10/08*

U.S. Cl. 324—173 **7 Claims**

1. Pulse tachometer for measuring the rotation of a rotating element (A), comprising an inductive proximity sensor (10) placed in the vicinity of this element (A) in order to generate an electric pulse (100) upon each revolution of the element (A), characterized in that it comprises a sender (20) connected to this sensor (10) in order to receive this electric pulse (100), shape it and convert it into an optical signal, and an optical-fibre link (30) connected to this sender (20) and to a receiver (40) for receiving this optical signal from the sender (2)) and routing it to this receiver (40) in order to use it so as to calculate the speed of the rotating element, the said sender (20) comprising a shaping circuit (21) for stretching the duration of the electric pulse (100), and a converter (22) for converting the stretched electric pulse into an optical signal.

5,703,484

ROLL INDEPENDENT VARIABLE INDUCTANCE INCLINOMETER

John W. Bieberdorf, Perry; John C. Wisehart, Stillwater, and Greg W. Draper, Perry, all of Okla., assignors to The Charles Machine Works, Inc., Perry, Okla.

Filed Oct. 4, 1993, Ser. No. 131,141

Int. Cl.[6] G01B *7/14;* **G01P** *15/00;* **G01C** *9/06*

U.S. Cl. 324—207.22 **14 Claims**

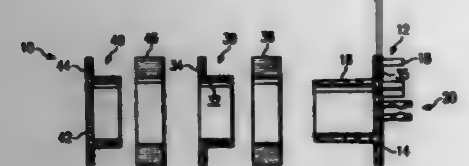

1. A pitch angle sensor and circuit, comprising in combination:

a container having an axial axis defining an axis of rotation of the sensor, and where an angle of the axial axis with respect to a reference defines a pitch angle of the sensor;

a magnetic liquid filling said container at a level less than full;

a pair of coils, each coil surrounding the container so that the magnetic fluid influences the inductance of each said coil as a function of pitch orientation of the container but the inductance of each coil is independent of the roll position of the sensor about the axis of rotation;

an excitation circuit for pulsing the coils with at least one pulse; and

a detecting circuit receiving an electrical response from each said coil and for producing an electrical indication representative of the extent of pitch of the container and an electrical indication representative of a polarity of the pitch of the container.

5,703,485

METHOD AND TEST STRUCTURE FOR DETERMINING MAGNETIC DOMAIN SWITCHING FIELD WHEN FABRICATING PATTERNED EXCHANGE BIASED MAGNETORESISTIVE (MR) HEAD

Yimin Guo, Sunnyvale; Kochan Ju, San Jose, and Yimin Hsu, Sunnyvale, all of Calif., assignors to Headway Technologies, Inc., Milpitas, Calif.

Filed Jul. 29, 1996, Ser. No. 687,903

Int. Cl.[6] G01R *33/02;* **H01F** *10/02;* **H01L** *43/00*

U.S. Cl. 324—235 **20 Claims**

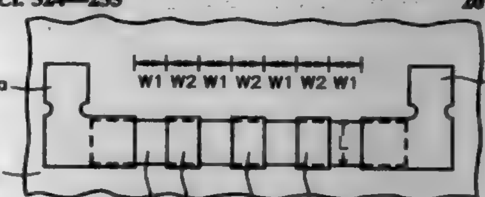

1. A method for determining a magnetic domain switching field comprising:

providing a substrate;

forming upon the substrate a patterned magnetoresistive (MR) layer, the patterned magnetoresistive (MR) layer having a projected length of the patterned magnetoresistive (MR) layer upon the substrate and a projected width of the patterned magnetoresistive (MR) layer upon the substrate;

forming at a pair of separated locations over the patterned magnetoresistive (MR) layer a pair of patterned conductor lead layers, the pair of patterned conductor lead layers defining a track width of the patterned magnetoresistive (MR) layer, the track width of the patterned magnetoresistive (MR) layer being smaller than the projected width of the patterned magnetoresistive (MR) layer;

forming upon the track width of the patterned magnetoresistive (MR) layer a minimum of one patterned anti-ferromagnetic layer separated from each patterned conductor lead layer within the pair of patterned conductor lead layers by a minimum of one unpinned width of the patterned magnetoresistive (MR) layer, the patterned magnetoresistive (MR) layer also having a minimum of one pinned width of the patterned magnetoresistive (MR) layer beneath the minimum of one patterned anti-ferromagnetic layer, where the pinned width of the patterned magnetoresistive (MR) layer and the unpinned width of the patterned magnetoresistive (MR) layer each have their magnetic domains ordered in a first direction absent an external magnetic field, and where the projected length of the patterned magnetoresistive (MR) layer, the unpinned width of the patterned magnetoresistive (MR) layer and the pinned width of the patterned magnetoresistive (MR) layer are chosen such that the magnetic domains within the unpinned width of the patterned magnetoresistive (MR) layer and the pinned width of the patterned magnetoresistive (MR) layer are coupled such that they switch jointly in an externally applied magnetic field gradient;

exposing the substrate to an externally applied negative magnetic field gradient opposite the first direction of the magnetic domains within the pinned width of the patterned magnetoresistive (MR) layer and the unpinned width of the patterned magnetoresistive (MR) layer while measuring a first resistance change through the pair of patterned conductor lead layers to determine a first magnetic field strength at which the magnetic domains within the pinned width of the patterned magnetoresistive (MR) layer and the unpinned width of the patterned magnetoresistive (MR) layer switch jointly to a second direction opposite the first direction; and

exposing the substrate to a positive magnetic field gradient opposite the second direction of the magnetic domains within the pinned width of the patterned magnetoresistive (MR) layer and the unpinned width of the patterned magnetoresistive (MR) layer while measuring a second resistance change through the pair of patterned conductor lead layers to determine a second magnetic field strength at which the magnetic domains within the pinned width of the patterned magnetoresistive (MR) layer and the unpinned width of the patterned magnetoresistive (MR) layer switch jointly to return to the first direction opposite the second direction.

5,703,486

BATTERY REMAINING CAPACITY MEASURING DEVICE

Youichi Arai, Shizuoka-ken, Japan; Brendan O'Toole, Co. Kerry, Ireland; Tsutomu Saigo, Shizuoka-ken, Japan; Kenichi Shimoyama, Shizuoka-ken, Japan; Ryo Kumagai, Shizuoka-ken, Japan, and Yoshihide Takada, Shizuoka-ken, Japan, assignors to Yazaki Corporation, Tokyo, Japan

Filed Aug. 21, 1995, Ser. No. 517,272

Claims priority, application Japan, Aug. 25, 1994, 6-200953

Int. Cl.[6] G01N *27/46*

U.S. Cl. 324—427 **3 Claims**

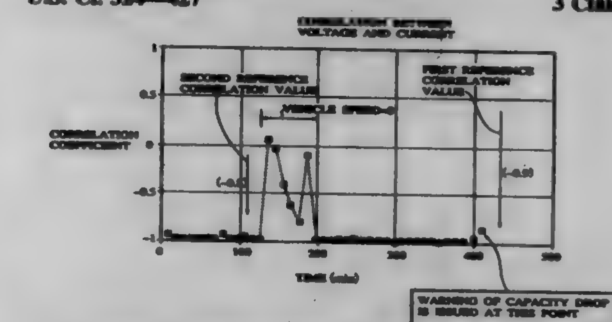

1. A battery remaining capacity measuring device, comprising:

voltage detecting means for detecting values of voltage at a battery terminal connected to a load;

current detecting means for detecting values of current flowing through the load;

voltage-current changing tendency calculation means for reading values of voltage detected by said voltage detecting means and values of current detected by said current detecting means, for storing the values of voltage and current as plural voltage data and corresponding plural current data, respectively, and for outputting plural voltage data and the corresponding plural current data;

determination means for calculating a correlation coefficient between the plural voltage data and the corresponding plural current data, for determining that variation of the load is equal to or less than a predetermined amount when the correlation coefficient exhibits a negative correlation and is equal to or greater than a first reference negative correlation coefficient, and for determining that variation of the load is greater than the predetermined amount when the correlation coefficient is equal to or less than a second reference negative correlation coefficient which is less than the first reference negative correlation coefficient;

voltage-current approximating linear calculation means for receiving the plural voltage data and the corresponding plural current data and determining a voltage-current approximating linear function from the plural voltage data and corresponding plural current data; and

battery remaining capacity calculation means for determining a remaining capacity of the battery by directly receiving values of voltage detected by said voltage detecting means and values of current detected by said current detecting means when the variation of the load is equal to or less than the predetermined amount, and determining the remaining capacity based on the voltage-current approximating linear function from the plural voltage data and the corresponding plural current data.

5,703,487

DETECTION OF CHARGE DEFICIENT SPOT SUSCEPTIBILITY

Satchidanand Mishra, Webster, N.Y., assignor to Xerox Corporation, Stamford, Conn.

Filed Jan. 11, 1996, Ser. No. 585,133

Int. Cl.[6] G03G *21/00*

U.S. Cl. 324—456 **9 Claims**

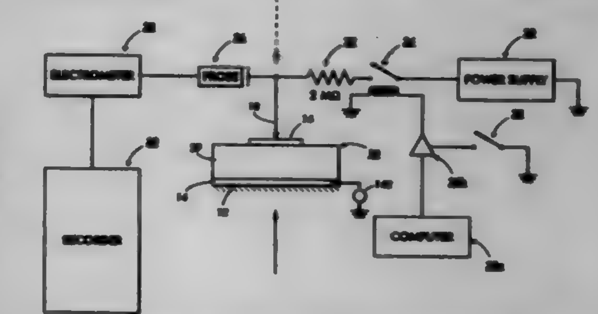

1. A process for ascertaining the microdefect levels of an electrophotographic imaging member by comparing the differential reduction in voltage value of a virgin imaging member with that of a known imaging member, the known imaging member having an acceptable level of printed defects, the differential reduction in voltage value being the difference of measured voltage from the voltage needed to capacitively charge the imaging members at a predetermined voltage level.

5,703,488

INSTRUMENT FOR MEASURING PLASMA EXCITED BY HIGH-FREQUENCY

Tadahiro Ohmi, 1-17-301, Komegabukuro 2-chome, Aoba-ku, Miyagi-ken 980, and Masaki Hirayama, Miyagi-ken, both of Japan, assignors to Tadahiro Ohmi, Miyagi-ken, Japan

PCT No. PCT/JP94/00046, § 371 Date Jul. 5, 1995, § 102(e) Date Jul. 5, 1995, PCT Pub. No. WO94/16542, PCT Pub. Date Jul. 21, 1994

PCT Filed Jan. 14, 1994, Ser. No. 481,285

Claims priority, application Japan, Jan. 15, 1993, 5-022106

Int. Cl.[6] G01N *27/62;27/66;* **H05H** *1/46*

U.S. Cl. 324—464 **5 Claims**

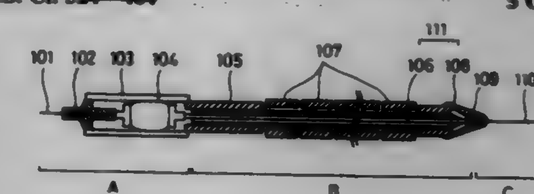

1. A measuring instrument for measuring all values of a plasma produced by means of a high frequency discharge at a given frequency within a vacuum chamber, said measuring instrument comprising: a wire for electrically connecting a first electrode disposed within a plasma and a terminal disposed outside said

vacuum chamber for providing output signals; and an insulator covering at least a portion of a surface of said wire; wherein the absolute value of the impedance at said given frequency between said first electrode and ground via said wire is at least five times the absolute value of the impedance at said given frequency between said first electrode and said plasma in a state in which no direct current flows through said first electrode.

5,703,489
TIMING CALIBRATION CIRCUIT AND METHOD FOR TEST SIGNALS
Shinichiro Kuroe, Gyoda, Japan, assignor to Advantest Corporation, Tokyo, Japan
Filed Aug. 22, 1995, Ser. No. 518,039
Claims priority, application Japan, Aug. 22, 1994, 6-220971
Int. Cl.⁶ G01R *35/00;25/00*
U.S. Cl. 324—601 **8 Claims**

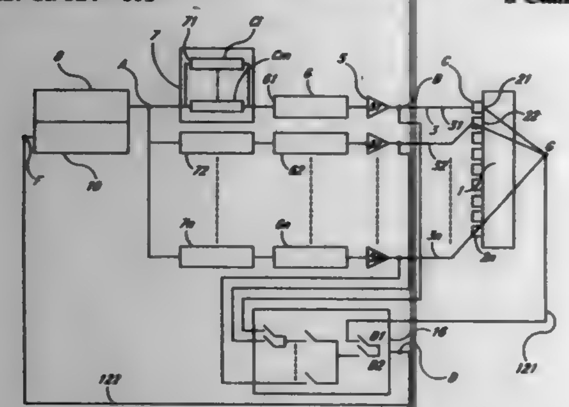

1. A timing calibration circuit for test signals to be used in a semiconductor test system having a timing generator (8), a plurality of test signal paths each having a wave-formatter (7) for shaping waveforms of a test signal (3) from the timing generator (8), a driver (5) for determining an amplitude of the test signal from the wave-formatter (7) and a test contactor (2) connected to the driver (5) for establishing an electronic connection between a corresponding pin of a semiconductor device (1) to be tested and said semiconductor test system, said timing calibration circuit comprising:

a plurality of variable delay circuits (6) each of which is assigned to one of said test signal paths, each of said variable delay circuits varying a phase delay time for a signal passing therethrough;

a multiplexer (16) for selecting one of said test signal paths for said timing calibration, inputs of said multiplexer being connected to outputs of said drivers;

a first signal path (12_1) having a point of connection (G) at one end which is connected to all of said test contactors (2) and another end which is connected to said multiplexer (16);

a means for measuring a phase delay time for signal propagation through a second signal path (12_2) connected between said multiplexer (16) and said measuring means when a pulse signal originated by said timing generator for said timing calibration propagates through said second signal path;

said multiplexer (16) selectively forming a first feedback loop and a second feedback loop with respect to each of said test signal paths, said first feedback loop including said driver (5), said test contactor (2) and said first signal path (12_1) while said second feedback loop including said driver (5);

said measuring means measuring a phase delay time for said first feedback loop to determine a reference value so that a phase delay time in said first feedback loop for other test signal paths is adjusted by said variable delay circuit to be equal to said reference value, said measuring means measuring a phase delay time for said second feedback loop to determine a calibration value, said calibration value for each of said test signal paths being recorded to be used for later calibration procedures.

5,703,490
CIRCUIT AND METHOD FOR MEASURING CURRENT IN AN H-BRIDGE DRIVE NETWORK
Dennis M. Kennedy, Glendale, Ariz., assignor to Honeywell Inc., Minneapolis, Minn.
Filed Jul. 28, 1995, Ser. No. 508,725
Int. Cl.⁶ G01R *27/28*
U.S. Cl. 324—650 **14 Claims**

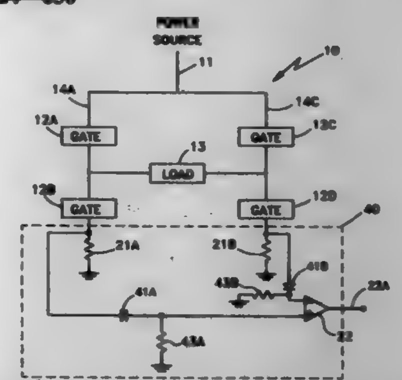

14. A method of generating a signal indicative of current in an H-bridge network, said network having first and second lower legs, said method comprising the steps of:

a) sensing the current amplitude and direction in said first and second lower legs and generating a first and second current signal indicative thereof;

b) half-wave rectifying said first and second current signals and generating first and second rectified signals indicative thereof; and,

c) comparing said first and second rectified signals and generating a feedback signal indicative thereof.

5,703,491
VOLTAGE DETECTION APPARATUS
Takuya Nakamura, Hamakita; Isuke Hirano, Hamamatsu; Shinichiro Aoshima, Iwata; Hironori Takahashi, Hamamatsu, and Tsuneyuki Urakami, Shuchi-gun, all of Japan, assignors to Hamamatsu Photonics K.K., Hamamatsu, Japan
Division of Ser. No. 618,406, Mar. 19, 1996, Pat. No. 5,583,444, which is a continuation of Ser. No. 186,580, Jan. 26, 1994, abandoned. This application Aug. 27, 1996, Ser. No. 703,768
Claims priority, application Japan, Jan. 27, 1993, 5-11835
Int. Cl.⁶ G01R *31/032*
U.S. Cl. 324—750 **11 Claims**

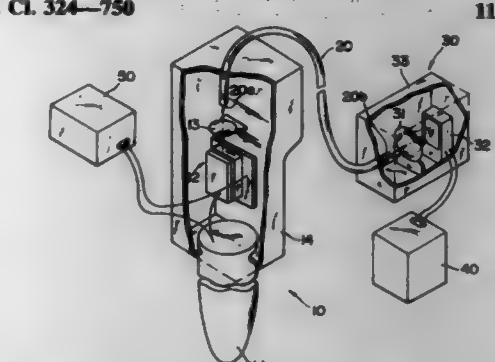

1. A voltage detection apparatus, comprising:

detection means for detecting a strength of an electric field by a voltage applied to a surface of a device to be measured and modulating an electric signal, based on the strength of said electric field;

light-emitting means for modulating output light, based on said electric signal modulated by said detection means;

extraction means for extracting a signal component of said output light from said light-emitting means; and

a constant current source for supplying a bias current, wherein said light-emitting means comprises a semiconductor laser which receives said bias current from said constant current source to inductively radiate said output light, and modulates said output light by superposing said signal detected by said detection means on said bias current;

wherein said detection means comprises a rod-shaped metal electrode with a sharp distal end, which electrode has a flat surface on a proximal end portion thereof, said semiconductor laser is placed on the flat surface to perform electric contact between the flat surface and a lower electrode thereof, said detection means is connected to one electrode of said constant current source, and an upper electrode of said semiconductor is connected to the other electrode of said constant current source.

5,703,492
SYSTEM AND METHOD FOR FAULT ANALYSIS OF SEMICONDUCTOR INTEGRATED CIRCUIT
Toyokazu Nakamura; Yasuko Hanagama; Tohru Tsujide, all of Tokyo, and Kenji Morohashi, Kanagawa, all of Japan, assignors to NEC Corporation, Tokyo, Japan
Filed Jan. 10, 1995, Ser. No. 370,888
Claims priority, application Japan, Jan. 10, 1994, 6-000672
Int. Cl.⁶ G01R *31/00*
U.S. Cl. 324—751 **21 Claims**

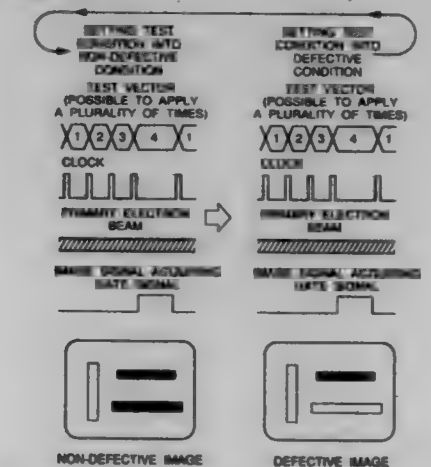

1. A fault analysis system for a semiconductor integrated circuit, for locating a fault portion in the semiconductor integrated circuit, comprising:

means for continuously irradiating an electron beam on a semiconductor integrated circuit,

means for detecting the amount of secondary electrons emitted from said semiconductor integrated circuit,

means for applying a sequence of test patterns to said semiconductor integrated circuit,

means for making a time of application of a selected test pattern to said semiconductor integrated circuit longer than that of other test patterns,

means, coupled to said detecting means, for acquiring a potential circuit to be displayed in real-time, without being temporarily stored in a memory, picture by picture, and asynchronously with acquisition of said potential distribution image, and

displaying alternately or simultaneously said potential distribution image for said non-defective semiconductor integrated circuit and said potential distribution image for said defective semiconductor integrated circuit in a same display or in different displays in real-time.

5,703,493
WAFER HOLDER FOR SEMICONDUCTOR APPLICATIONS
Anthony R. Weeks, Gilbert; Mark D. Norris, Mesa, and Steven A. Switzer, Phoenix, all of Ariz., assignors to Motorola, Inc., Schaumburg, Ill.
Filed Oct. 25, 1995, Ser. No. 548,109
Int. Cl.⁶ G01R *1/04*
U.S. Cl. 324—755 **17 Claims**

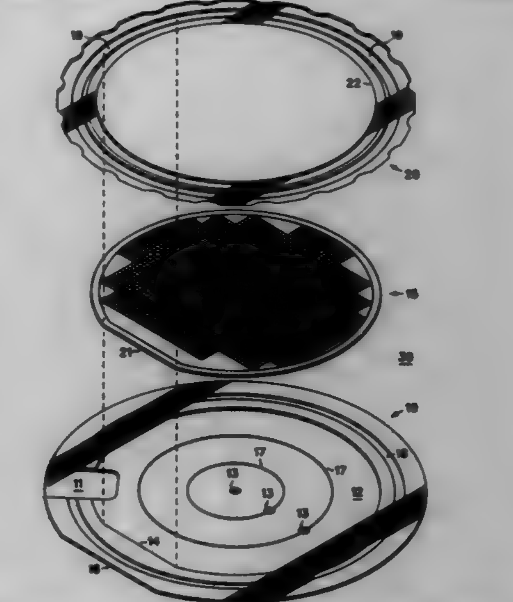

1. A wafer holder for semiconductor applications comprising:

a support structure having a patterned surface, a vacuum opening, and a vacuum wand slot extending into the support structure, the patterned surface having a recessed area and a vacuum groove intersecting the vacuum opening; and

a ring that attaches to the support structure such that at least a portion of the ring is overlying at least a portion of the patterned surface of the support structure and at least a central portion of the support structure is exposed.

5,703,494
PROBING TEST APPARATUS
Kunio Sano, Yamanashi-ken, Japan, assignor to Tokyo Electron Limited, Tokyo, Japan
Filed Nov. 3, 1995, Ser. No. 553,013
Claims priority, application Japan, Nov. 9, 1994, 6-300260
Int. Cl.⁶ G01R *31/02*
U.S. Cl. 324—761 **11 Claims**

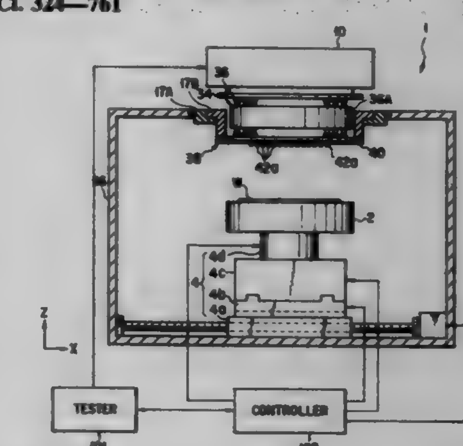

1. A probing test apparatus for testing electric properties of a circuit while sending a test signal to the circuit to be tested, comprising:

a probe card having a plurality of probes and first terminals to be contacted with and to be electrically connected to conductive pads of the circuit to be tested;
a test head having a signal transmitting circuit through which the test signal is transmitted to each of the probes;
a performance board having second terminals electrically connected to said signal transmitting circuit of the test head;
a contact ring interposed between the performance board and the probe card and whose impedance has been adjusted;
a plurality of first-type pogopins each having a pair of pin members contacting the first and second terminals to transmit the test signal to each of the probes said first-type pogopins being arranged in the contact ring; and
a plurality of second-type pogopins each having a pair of pin members contacting the first and second terminals, said second-type pogopins being arranged in the contact ring, and spaced from said first-type pogopins in a plane perpendicular to the axes of said pin members, said second-type pogopins electrically grounded,
wherein an interval L_1 in the plane between each of the first-type pogopins and some of the second-type pogopins which are the nearest to said each of the first-type pogopins is smaller than an interval L_2 in the plane between said each of the first-type pogopins and an adjacent first-type pogopin which is the nearest to said each of the first-type pogopins,
and wherein for each one of said first-type pogopins the closest pogopins thereto in said plane are all second-type pogopins such that said one of said first-type pogopins is surrounded by said second type pogopins.

5,703,495
DATA OUTPUT IMPEDANCE CONTROL
Alfred Leonard Sartwell, Jericho, and Endre Philip Thoma, Colchester, both of Vt., assignors to International Business Machines Corporation, Armonk, N.Y.
Division of Ser. No. 895,971, Jun. 9, 1992, Pat. No. 5,455,517. This application Apr. 12, 1995, Ser. No. 421,586
Int. Cl.⁶ G01R *31/28*
U.S. Cl. 324—763 **2 Claims**

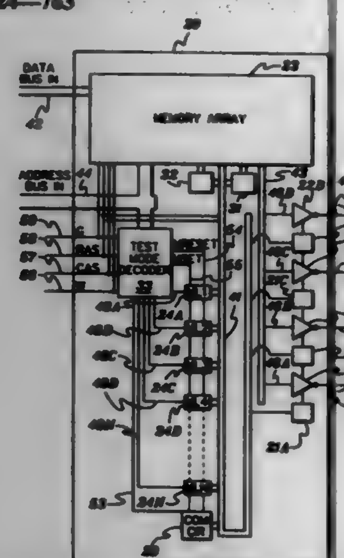

1. A method of determining whether an integrated circuit module having an output control circuit is in a test mode, the output control circuit transitioning from a low impedance state to a high impedance state after a first time period during normal operation of the module, comprising the steps of:
maintaining a low impedance state of the output control circuit for a second time period greater than said first time period when the module is operated in a test mode; and
sampling data output of the module at a time falling between an end of the first time period and an end of the second time period to determine whether the output control circuit is in the low impedance state, thereby determining whether the module is in the test mode.

5,703,496
METHOD AND APPARATUS FOR LIMITING THE SLEW RATE OF OUTPUT DRIVERS BY SELECTIVELY PROGRAMMING THE THRESHOLD VOLTAGE OF FLASH CELLS CONNECTED THERETO
Gregory D. Sabin, Phoenix, Ariz., assignor to Intel Corporation, Santa Clara, Calif.
Continuation-in-part of Ser. No. 534,256, Sep. 26, 1995, Pat. No. 5,638,007. This application Mar. 28, 1996, Ser. No. 623,412
Int. Cl.⁶ H03K *19/0948*
U.S. Cl. 326—27 **17 Claims**

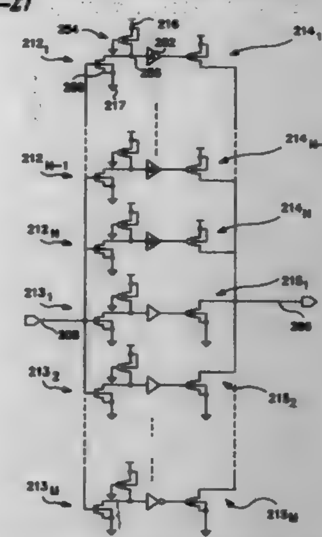

1. In an output driver for outputting signals, subject to a current change slew rate, from an integrated circuit chip wherein the output driver includes a plurality of transistor devices connected to an output line, an improvement comprising:
programmable means for selecting the slew rate for output signals driven by the output driver, said programmable means including a separate flash-programmable element connected to each respective transistor device, with each of said separate flash-programmable elements configured to receive a data signal along an input line and output the data signal to the respective transistor device subject to a delay dependent upon a degree of programming of the flash element.

5,703,497
CURRENT SOURCE RESPONSIVE TO SUPPLY VOLTAGE VARIATIONS
Sung-Ki Min, Cupertino, Calif., assignor to Integrated Device Technology, Inc., Santa Clara, Calif.
Division of Ser. No. 442,725, May 17, 1995. This application Jul. 25, 1996, Ser. No. 686,007
Int. Cl.⁶ H03K *3/011;19/086*
U.S. Cl. 326—33 **6 Claims**

1. A current source comprising:
a diode element having an anode and a cathode;
a resistive element having a first end connected to a first voltage source and a second end connected to said cathode of said diode element;
a first transistor having a drain coupled to said anode of said diode, a source coupled to a second voltage source, and a gate coupled to said drain;
a second transistor having a gate coupled to said gate of said first transistor and having a source coupled to said second voltage source;

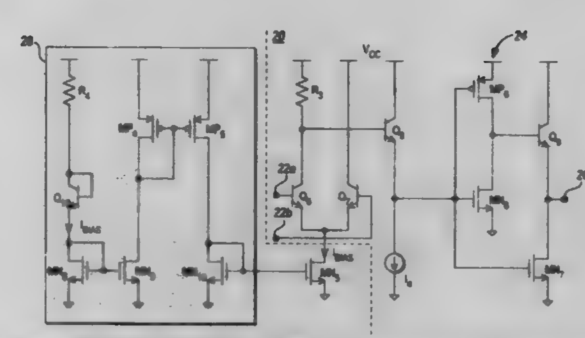

a third transistor having a drain and a gate coupled together and to a drain of said second transistor and having a source coupled to said first voltage source;
a fourth transistor having a gate coupled to said gate of said third transistor and having a source coupled to said first voltage source;
a fifth transistor having a gate and a drain coupled together and to a drain of said fourth transistor and having a source coupled to said second voltage source; and
a sixth transistor having a source coupled to said second voltage source, a gate coupled to said gate of said fifth transistor, and a drain coupled to an input stage of a circuit.

5,703,498
PROGRAMMABLE ARRAY CLOCK/RESET RESOURCE
Scott Whitney Gould, South Burlington, Vt.; Frederick Curtis Furtek, Menlo Park, Calif.; Frank Ray Keyser, III, Colchester, Vt.; Brian A. Worth, Milton, Vt., and Terrance John Zittritsch, Williston, Vt., assignors to International Business Machines Corporation, Armonk, N.Y., and Atmel Corporation, San Jose, Calif.
Division of Ser. No. 459,156, Jun. 2, 1995. This application Sep. 6, 1996, Ser. No. 709,060
Int. Cl.⁶ H03K *19/177*
U.S. Cl. 326—40 **5 Claims**

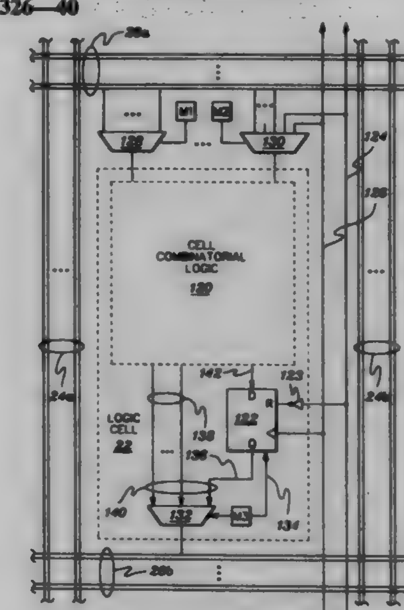

1. A programmable array comprising:
a first plurality of logic cells, each logic cell of the first plurality of logic cells including
a programmable input multiplexer having a plurality of inputs and an output,
a combinatorial logic circuit having an input connected to the output of the programmable input multiplexer, the combinatorial logic circuit further having an output, and
a sequential logic circuit having an input connected to the output of the combinatorial logic circuit, the sequential logic circuit further having a clock/reset input; and
a programmable clock/reset multiplexer associated with the first plurality or logic cells for providing a selected clock/reset signal to an input of the programmable input multiplexer of each of the first plurality of logic cells and to the clock/reset input of the sequential logic circuit of each of the first plurality of logic cells.

5,703,499
ADDRESS BIT LATCHING INPUT CIRCUIT
Koichi Abe, Tokyo-to, and Takashi Inui, Tsuchiura, both of Japan, assignors to Texas Instruments Incorporated, Dallas, Tex.
Filed Apr. 10, 1996, Ser. No. 630,312
Claims priority, application Japan, Apr. 10, 1995, 7-084172
Int. Cl.⁶ H03K *19/0175*
U.S. Cl. 326—62 **5 Claims**

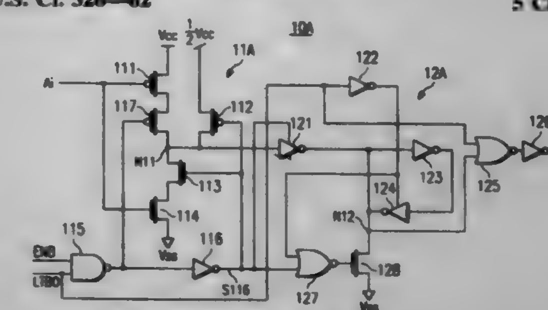

1. An address bit input circuit comprising:
first, second, and third input terminals for respectively receiving an input address bit signal having FIRST and SECOND levels, an enable signal having LOW and HIGH levels, and a latch bar signal;
first, second, and ground power supply terminals for respectively receiving first, second, and ground power supply potentials, the second power supply potential being between the first power supply potential and ground;
an internal node having an internal node potential;
an input switching circuit responsive to the address bit signal, enable signal, and the latch bar signal for selectively (i) coupling the internal node to the first input terminal when the enable signal is HIGH so the internal node potential responds to the input address bit signal, and (ii) coupling the internal node to the second power supply terminal when the enable signal is LOW;
an output terminal; and
a latching circuit coupled to the enable signal, latch bar signal, internal node potential, and output terminal for selectively generating at the output terminal a (i) a latched address output signal responsive to the internal node potential when the enable signal is HIGH and (ii) a standby output signal when the enable signal is LOW.

5,703,500
THRESHOLD VOLTAGE SCALABLE BUFFER WITH REFERENCE LEVEL
Huy Thanh Vo, Boise, Id., assignor to Micron Technology, Inc., Boise, Id.
Filed May 15, 1996, Ser. No. 648,443
Int. Cl.⁶ H03K *19/0185;19/0948*
U.S. Cl. 326—71 **15 Claims**

1. A buffer circuit, comprising:
a first inverter with a first current limiter that limits the standby current used by the first inverter;

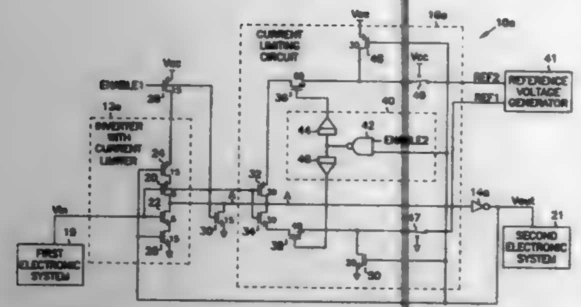

a second inverter coupled to an output of the first inverter so as to convert a first logic level of an input signal provided to the first inverter to a second logic level at an output of the second inverter;

a second current limiting circuit coupled to an output of the first inverter and coupled an input of the second inverter to further limit the standby current in the buffer; and

wherein the first current limiting circuit comprises first and second transistors each having a gate coupled to receive the output signal of the second inverter such that the first transistor limits the standby current of the first inverter when the output of the buffer is a low logic level and the second transistor limits the standby current of the buffer when the output of the buffer is a high logic value.

5,703,501

APPARATUS AND METHOD FOR PRECHARGING A BUS TO AN INTERMEDIATE LEVEL

Joseph P. Geisler, Austin, Tex., assignor to Advanced Micro Devices, Inc., Sunnyvale, Calif.

Filed Nov. 27, 1995, Ser. No. 563,782

Int. Cl.^{6} H03K *19/017*

U.S. Cl. 326—96 **16 Claims**

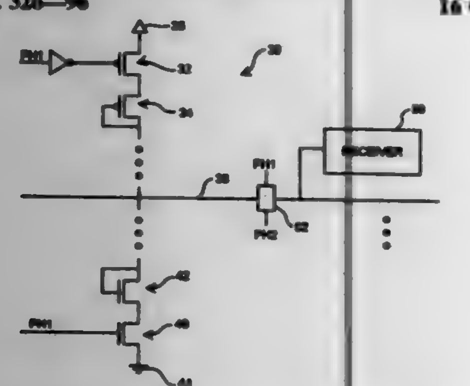

14. A method for precharging a conductor within a bus, comprising:

providing a clocked pull-up circuit coupled between a power supply and said conductor, and providing a clocked pull-down circuit coupled between said conductor and a ground voltage;

applying a clocking signal simultaneously to said pull-up and pull-down circuits;

activating said pull-up circuit if voltage upon said conductor falls below a first amount; and

activating said pull-down circuit if voltage upon said conductor rises above a second amount greater in voltage magnitude than said first amount.

5,703,502

CIRCUITRY THAT DETECTS A PHASE DIFFERENCE BETWEEN A FIRST, BASE, CLOCK AND A SECOND, DERIVATIVE, CLOCK DERIVED FROM THE BASE CLOCK

Harsimran S. Grewal, San Francisco, and Lawrence R. Yang, Palo Alto, both of Calif., assignors to Sun Microsystems, Inc., Mountain View, Calif.

Filed May 30, 1996, Ser. No. 652,700

Int. Cl.^{6} H03D *13/00*

U.S. Cl. 327—3 **14 Claims**

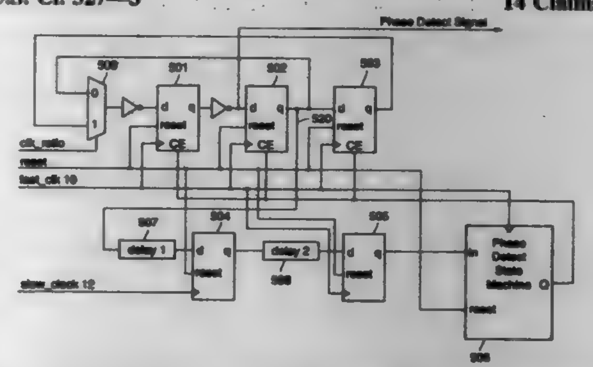

1. A phase detection circuit for detecting a phase relationship between a slow clock signal, characterized by transitions of a given polarity at a first frequency, and a fast clock signal, characterized by transitions of the given polarity at a second frequency that is an integer multiple of the first frequency, comprising:

transition indication circuitry that generates a transition indication signal responsive to transitions, of the given polarity, of the fast clock signal, the transition indication signal including a transition indication corresponding to each nth transition of the given polarity, of the fast clock signal and at a phase that is selectable relative to the slow clock signal in response to a transition indication control signal;

sampling circuitry that samples the transition indication signal responsive to each transition, of the given polarity, of the slow clock signal to generate a transition indication sample;

coincidence determination circuitry, responsive to the transition indication sample signal and to the fast clock signal, that determines if the transition indication coincides with a transition, of the given polarity, of the fast clock signal;

transition indication control circuitry, responsive to the determination by the coincidence determination circuitry and to the fast clock signal that generates the transition indication control signal; and

phase relationship indication circuitry that provides an indication of the phase relationship between the slow clock signal and the fast clock signal responsive to the transition indication control signal.

5,703,503

WINNER-TAKE-ALL CIRCUIT

Masayuki Miyamoto, Nabari; Kunihiko Iizuka, Sakai; Mitsuhiko Fujio, Iizuka, and Hirofumi Matsui, Ikoma-gun, all of Japan, assignors to Sharp Kabushiki Kaisha, Osaka, Japan

Filed May 22, 1996, Ser. No. 653,946

Claims priority, application Japan, May 24, 1995, 7-125372

Int. Cl.^{6} G01R *19/00;* **H03K** *5/22*

U.S. Cl. 327—58 **6 Claims**

1. A winner-take-all circuit for judging an input voltage having one of a largest and smallest value among multiple input voltages comprising:

(1) a plurality of detecting units each including,

(a) a first transistor for conducting a current in an amount defined by a balance between one input voltage and a reference voltage,

(b) a second transistor interposed between said first transistor and a first power source line,

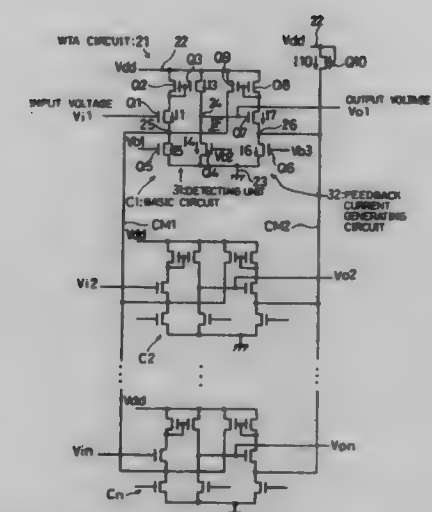

(c) a third transistor, connected to said first power source line, for making a pair with said second transistor to form a current mirror circuit,

(d) a fourth transistor, interposed between said third transistor and a second power source line, for conducting a predetermined amount of a current, and

(e) a fifth transistor, interposed between said first transistor and said second power source line, for conducting a predetermined amount of a current,

said each detecting unit outputting a voltage representing a result of a largeness detection among said input voltages from a connecting point of said third and fourth transistors, said plurality of detecting units being interconnected in parallel to hold connecting points of said first and fifth transistors in all of said detecting units at a same potential,

(2) feedback current generating circuits in matching numbers with said detecting units each including,

(f) a sixth transistor, connected to said second power source line, for conducting a predetermined amount of a current;

(g) a seventh transistor, connected to said sixth transistor, for conducting a current in an amount defined by a balance between a terminal voltage of said sixth transistor and an output voltage from the detecting unit;

(h) an eighth transistor interposed between said seventh transistor and said first power source line; and

(i) a ninth transistor, connected to said first power source line, for making a pair with said eighth transistor to form a current mirror circuit, and for supplying a feedback current to said connecting point between said first and fifth transistors for varying said reference voltage;

(3) a tenth transistor serving as a common transistor, interposed between said first power source line and said each sixth transistor, for supplying a bias current defined by a terminal voltage of said each sixth transistor to said each sixth transistor, wherein,

let r(9,8) be a ratio of gate width-to-length ratios of said ninth and eighth transistors, r(10,7) be a ratio of gate width-to-length ratios of said tenth and seventh transistors, I5 and I6 be currents respectively flowing through said fifth and sixth transistors, then I5, I6, r(9,8), and r(10,7) are respectively set to specific values to satisfy a following equation:

$$r(9,8)\cdot I6\cdot\{2/(2+r(10,7))\}>I5.$$

5,703,504

FEEDFORWARD ADAPTIVE THRESHOLD PROCESSING METHOD

Christopher K. Y. Chun; Stephen G. Shook, both of Gilbert, Ariz., and Carl R. Ryan, Cassville, Mo., assignors to Motorola, Schaumburg, Ill.

Filed Dec. 26, 1995, Ser. No. 578,727

Int. Cl.^{6} H03K *5/22*

U.S. Cl. 327—72 **12 Claims**

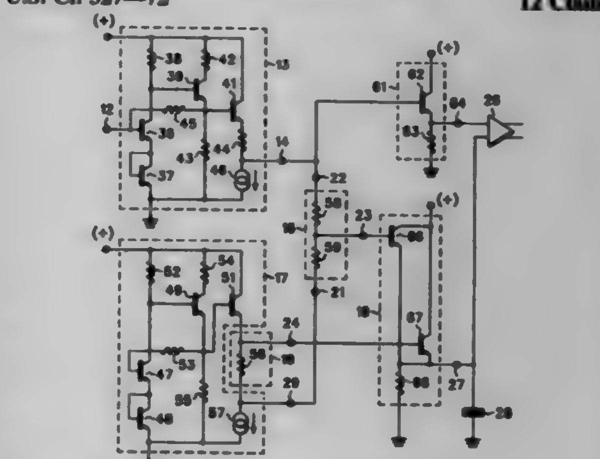

1. A signal processing method comprising:

applying an input signal to a ratio circuit;

generating a reference signal having a value substantially equal to a minimum value of the input signal;

generating a ratio signal that is proportional to a difference between the input signal and the reference signal;

generating an offset signal that has a larger amplitude than the reference signal; and

biasing a comparator with a one of the offset signal and the ratio signal which has a larger amplitude while using the comparator for receiving the input signal.

5,703,505

SIGNAL RECEPTION APPARATUS HAVING AUTOMATIC LEVEL SELECTION FUNCTION

Ki Jo Kwon, Kyungki-Do, Rep. of Korea, assignor to Goldstar Electron Co., Ltd., Cheongju, Rep. of Korea

Filed Jan. 6, 1995, Ser. No. 369,456

Claims priority, application Rep. of Korea, Nov. 9, 1994, 29325/1994

Int. Cl.^{6} H03K *5/22*

U.S. Cl. 327—75 **8 Claims**

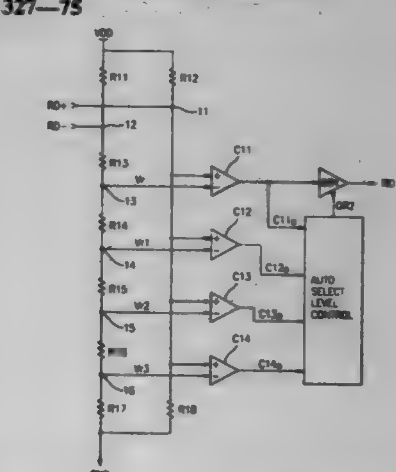

1. A signal reception apparatus having automatic level selection function, comprising:

a plurality of comparing means, each for comparing a received input signal with one of a plurality of sensing levels of said input signal and each outputting a sensing signal in accordance with such a comparison;

auto select level control means for receiving said sensing signal from each of said plurality of comparing means for generating a reception enable signal according to the sensing signal which is selected by said auto select level control means; and

a first data buffer for receiving the sensing signal from one of said plurality of comparing means and outputting the received sensing signal as valid reception data in response to the reception enable signal from the auto select level control means.

5,703,506
SIGNAL PROCESSING METHOD
Stephen G. Shook; Christopher K. Y. Chun, both of Gilbert, and Daniel B. Schwartz, Apache Junction, all of Ariz., assignors to Motorola, Schaumburg, Ill.
Filed Dec. 26, 1995, Ser. No. 578,726
Int. Cl.⁶ H04Q *9/00;* **G08G** *1/01*
U.S. Cl. 327—87 **12 Claims**

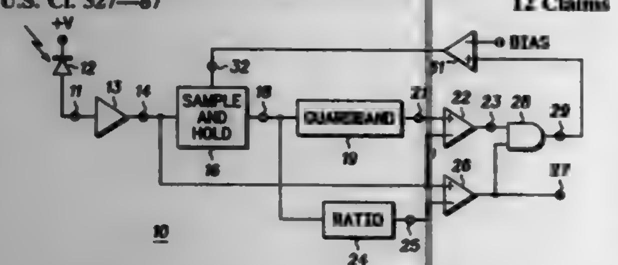

1. A signal processing method comprising:

holding a maximum value of an input signal on a storage element as a maximum stored value;

generating a guardband signal based on an output signal of the storage element that is less than the maximum stored value of input signal by an amount that is a multiple of a noise anticipated on the input signal;

changing the maximum stored value on the storage element when the input signal is less than the guardband signal; and

generating a threshold signal that is a percentage value of the maximum stored value, and comparing the input signal to the threshold signal for generating an output signal.

5,703,507
DEVICE FOR SWITCHING AMONG CLOCK SIGNALS ALLOCATED TO A PLURALITY OF USERS
Harry Siebert, Germering, Germany, assignor to Siemens Aktiengesellschaft, Munich, Germany
Filed Mar. 20, 1996, Ser. No. 618,809
Claims priority, application Germany, Mar. 24, 1995, 195 10 800.0
Int. Cl.⁶ H03K *3/64;* **G06F** *1/06*
U.S. Cl. 327—99 **13 Claims**

1. A switching arrangement for selecting a clock signal for a digital circuit, said switching arrangement having a plurality of users, each user emitting a selection signal, indicating selection of that user, and a clock signal, said switching arrangement comprising:

a plurality of selection circuits equal in number and respectively allocated to said users, each selection circuit having a first input supplied with the selection signal of its allocated user, a second input supplied with the clock signal of its allocated user, a third input, and first and second outputs;

each selection circuit further including means for producing a sampled selection criterion and means for producing a delayed selection criterion derived from said sampled selection criterion, said sampled selection criterion and said

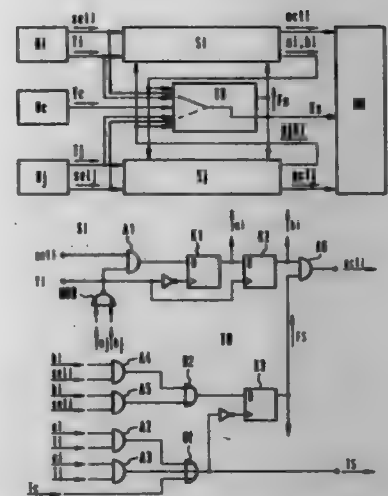

delayed selection criterion comprising selection criteria and being present at said first output and an activity signal being present at said second output;

means for providing said activity signal at said second output from said delayed selection criterion;

the third input of each selection circuit being connected to the first output of each of the other selection circuits;

each selection circuit further including means for enabling production of said selection criteria only in the presence of the selection signal from its allocated user and the absence of any selection criteria at its third input;

the digital circuit connected to the second outputs of all of said selection circuits and being supplied with the activity signal from the selection circuit allocated to a selected user; and

clock switching means, having a first set of inputs connected to said users and receiving the respective clock signals therefrom and a second set of inputs connected to the first outputs of said selection circuits for receiving said selection criteria therefrom, for switching one clock signal, emitted by a user which has emitted a selection signal, through as a selected clock signal to said digital circuit dependent on said selection criteria.

5,703,508
REPEATER WITH THRESHOLD MODULATION
Richard C. Foss, Kirkcaldy Fife, Scotland, assignor to Mosaid Technologies Incorporated, Kanata, Canada
Division of Ser. No. 401,300, Mar. 9, 1995, Pat. No. 5,576,649, which is a continuation of Ser. No. 923,534, Aug. 3, 1992, abandoned. This application Nov. 15, 1996, Ser. No. 749,408
Int. Cl.⁶ H03K *3/037*
U.S. Cl. 327—111 **10 Claims**

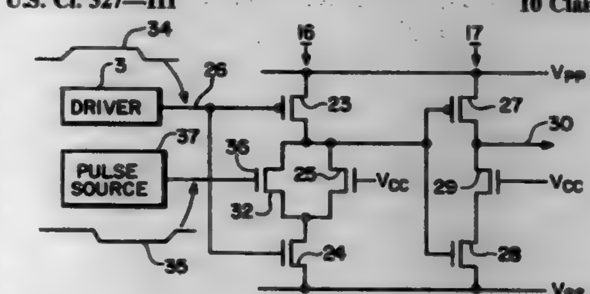

1. A method of repeating a pulse signal comprising outputting a signal at a first voltage level upon a first rising edge of the pulse signal exceeding a low threshold, then raising said threshold and outputting said signal at another voltage level upon a second trailing edge of the pulse signal dropping below said raised threshold.

5,703,509
FREQUENCY MULTIPLIER CIRCUIT
Masaru Hirata, Tokyo, Japan, assignor to NEC Corporation, Tokyo, Japan
Filed Aug. 14, 1996, Ser. No. 696,622
Claims priority, application Japan, Aug. 14, 1995, 7-228571
Int. Cl.⁶ H03B *19/00*
U.S. Cl. 327—119 **6 Claims**

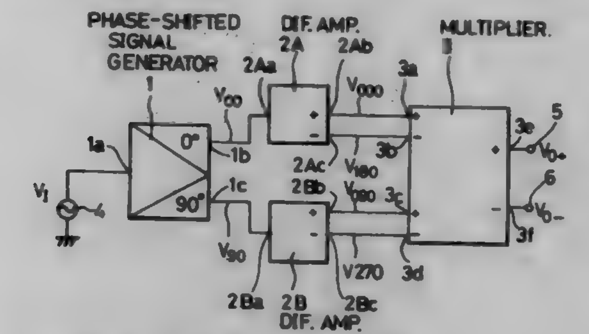

1. A frequency multiplier circuit comprising:

a phase-shifted signal generator for receiving an initial input signal to generate first and second output signals whose phases are shifted by 90° with each other;

a first differential amplifier for receiving said first output signal to amplify said first output signal and for outputting a first positive-phase output signal and a first negative-phase output signal;

a second differential amplifier for receiving said second output signal to amplify said second output signal and for outputting a second positive-phase output signal and a second negative-phase output signal;

a multiplier for receiving said first and second positive-phase output signals to multiply said first and second positive-phase output signals, outputting a third positive-phase output signal as a positive-phase output of said frequency multiplier circuit, receiving said first and second negative-phase output signals to multiply said first and second negative-phase output signals, and outputting a third negative-phase output signal as a negative-phase output of said frequency multiplier circuit;

wherein each of said third positive- and negative-phase output signals has a doubled frequency of said initial input signal and substantially the same dc offset voltage.

5,703,510
POWER ON RESET CIRCUIT FOR GENERATING RESET SIGNAL AT POWER ON
Masayuki Iketani, and Shigeki Ohbayashi, both of Hyogo, Japan, assignors to Mitsubishi Denki Kabushiki Kaisha, Tokyo, Japan
Filed Feb. 28, 1996, Ser. No. 608,075
Int. Cl.⁶ H03L *7/00*
U.S. Cl. 327—143 **4 Claims**

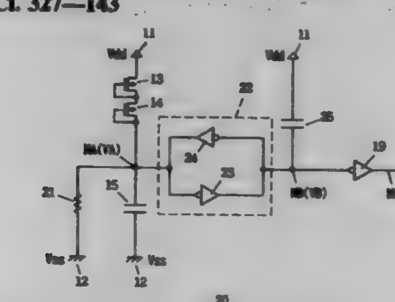

1. A power on reset circuit, comprising:

load means connected between a first power supply node and a first node;

a first capacitor connected between a second power supply node and said first node;

resistance means connected parallel to said first capacitor;

a first CMOS inverter circuit having an input node connected to said first node and an output node connected to a second node; and

a second CMOS inverter circuit having an input node connected to said second node and an output node connected to said first node.

5,703,511
CHARGE PUMP CIRCUIT, PLL CIRCUIT WITH CHARGE PUMP CIRCUIT, AND SEMICONDUCTOR INTEGRATED CIRCUIT WITH CHARGE PUMP CIRCUIT
Masaaki Okamoto, Kawasaki, Japan, assignor to Fujitsu Limited, Kawasaki, Japan
Filed Oct. 23, 1996, Ser. No. 735,997
Claims priority, application Japan, Jun. 19, 1996, 8-158013
Int. Cl.⁶ H03L *7/089*
U.S. Cl. 327—157 **28 Claims**

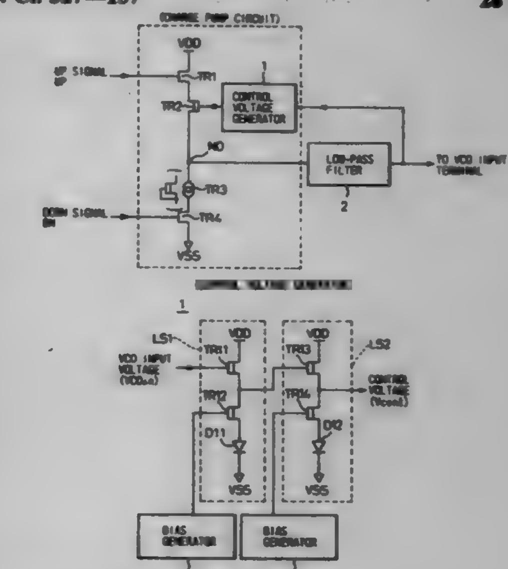

1. A charge pump circuit comprising:

a first transistor connected to a first power source line and having a control electrode to receive a first control signal;

a second transistor connected to a second power source line and having a control electrode to receive a second control signal;

a third transistor and a current source connected in series between the first and second transistors, a node between the third transistor and the current source providing a signal, which is passed through a low-pass filter to provide a VCO input signal; and

a control voltage generator for generating a control voltage according to the VCO input signal and applying the control voltage to a control electrode of the third transistor.

5,703,512
METHOD AND APPARATUS FOR TEST MODE ENTRY DURING POWER UP
David C. McClure, Denton, Tex., assignor to SGS-Thomson Microelectronics, Inc., Carrollton, Tex.
Continuation of Ser. No. 466,107, Jun. 6, 1995, abandoned. This application Sep. 12, 1996, Ser. No. 712,960
Int. Cl.⁶ H03K *17/22*
U.S. Cl. 327—198 **28 Claims**

1. In an integrated circuit (IC) having operational-circuitry and test-circuitry connected to said operational-circuitry, test-mode-enable circuitry for enabling said test-circuitry to operate during a time-interval of power-up of said IC from a power terminal that is connected to source of IC operating voltage, said power terminal initially having a potential of zero volts applied thereto as said power-up time-interval begins, thereafter having a first low voltage

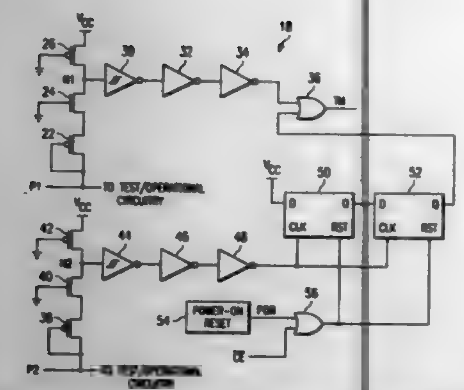

applied thereto, and then having a second higher voltage applied thereto, said test-circuitry being enabled upon receiving a test-mode signal, said test-mode-enable circuitry comprising:

a first terminal for receiving a first signal generally coincident with said beginning of said power-up time-interval;
a second terminal for receiving a second signal at a time during said power-up time-interval;
first-voltage-threshold-sensitive means responsive to an input of a first threshold level;
said first-voltage-threshold-sensitive means having an output connected to provide said test-mode signal to said test-circuitry, and having an input connected to receive a voltage difference between said first terminal and said power terminal;
said first-voltage-threshold-sensitive means operating to apply said test-mode signal to said testing-circuitry when said source of operating voltage equals said first low voltage;
signal-latching means having an input, and having an output operating to apply said test-mode signal to said testing-circuitry;
second-voltage-threshold-sensitive means;
said second-voltage-threshold means having an input connected to receive a voltage difference between said second terminal and said power terminal, and having an output connected to said input of said signal-latching means;
said second-voltage-threshold-sensitive means operating to control said signal-latching means to cause said signal-latching means to apply said test-mode signal to said testing-circuitry upon the occurrence of said second signal, and when said source of operating voltage equals said second higher voltage; and
said test-mode signal being thereafter maintained independent of said first and second signals received respectively by said first and second terminals.

5,703,513
MASTER-SLAVE BISTABLE LATCH WITH CLOCK INPUT CONTROL

Takeshi Hashizume, and Kazuhiro Sakashita, both of Tokyo, Japan, assignors to Mitsubishi Denki Kabushiki Kaisha, Tokyo, Japan

Filed Feb. 28, 1996, Ser. No. 60[illegible],051
Claims priority, application Japan, Sep. 6, 1995, 7-229059
Int. Cl.[6] H03K *3/289*
U.S. Cl. 327—202 **11 Claims**

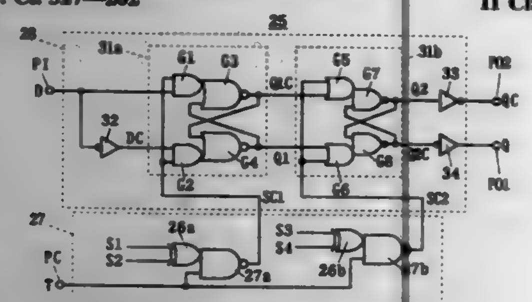

1. A semiconductor integrated circuit, comprising:
an input terminal receiving input data;
first and second output terminals;
input data inverting means for outputting inverted input data which is a logical inversion of said input data obtained through said input terminal;
first data holding means receiving said input data and said inverted input data, for holding a logical value indicated by said input data as first internal output data and holding a logical value indicated by said inverted input data as first inverted internal output data in synchronization with a first controlling clock;
second data holding means receiving said first internal output data and said first inverted internal output data, for holding a logical value indicated by said first internal output data as second internal output data and holding a logical value indicated by said first inverted internal output data as second inverted internal output data in synchronization with a second controlling clock;
first external data output means for logically inverting said second inverted internal output data to output output data from said first output terminal;
second external data output means for logically inverting said second internal output data to output inverted output data from said second output terminal;
first clock control means receiving first and second comparison data and a reference clock, for outputting said reference clock/a fixed voltage as said first controlling clock on the basis of match/mismatch of logical values of said first comparison data and said second comparison data; and
second clock control means receiving third and fourth comparison data and said reference clock, for outputting said reference clock/a fixed voltage as said second controlling clock on the basis of match/mismatch of logical values of said third comparison data and said fourth comparison data;
wherein said first comparison data is one data of said input data and said inverted input data, and said second comparison data is one data of said first internal data, said second internal data, said output data, said first inverted internal data, said second inverted internal data and said inverted output data;
when said first comparison data is said input data, said second comparison data is one data of said first internal data, said second internal data and said output data; and
when said first comparison data is said inverted input data, said second comparison data is one data of said first inverted internal data, said second inverted internal data and said inverted output data; and
said third comparison data is one data of said input data, said first internal data, said inverted input data and said first inverted internal data, and said fourth comparison data is one data of said first internal data, said second internal data, said output data, said first inverted internal data, said second inverted internal data and said inverted output data; and
when said third comparison data is said input data, said fourth comparison data is one data of said first internal data, said second internal data and said output data;
when said third comparison data is said first internal data, said fourth comparison data is one data of said second internal data and said output data;
when said third comparison data is said inverted input data, said fourth comparison data is one data of said first inverted internal data, said second inverted internal data and said inverted output data; and
when said third comparison data is said first inverted internal data, said fourth comparison data is one data of said second inverted internal data and said inverted output data.

5,703,514
DIGITAL FREQUENCY DIVIDER PHASE SHIFTER

Steve I. Hsu, Palos Verdes; Howard S. Nussbaum, Los Angeles; William P. Posey, Palos Verdes Estates, and Stephen D. Taylor, Agoura, all of Calif., assignors to Hughes Electronics, Los Angeles, Calif.

Filed Dec. 21, 1995, Ser. No. 576,329
Int. Cl.[6] H03H *11/16*
U.S. Cl. 327—237 **9 Claims**

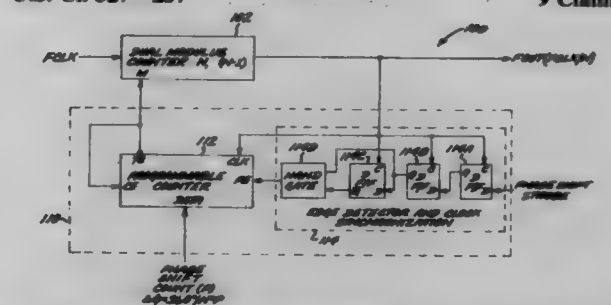

1. A digital phase shift circuit responsive to a periodic pulse train for precisely setting a second phase of a phase shift circuit output signal in relation to a first phase of the phase shift circuit output signal, comprising:
a high speed dual modulus digital counter responsive to the pulse train, the dual modulus counter providing the phase shift circuit output signal, wherein a counter modulus is set to a first number N or a second number N+M by a modulus control signal; and
a programmable digital counter circuit generating said modulus control signal, said programmable counter clocked by said circuit output signal and enabled by a phase shift initiation signal to load a phase shift count value corresponding to a given phase change and commence operation to count a number P of output signal pulses determined by said phase shift count value, said programmable counter disabled from counting when said number of pulses has been counted, said modulus control signal having a first state for selecting N as said modulus when said programmable counter is disabled from counting, said modulus control signal having a second state for selecting N+M as said modulus when said programmable counter is enabled, wherein said phase shift circuit output signal is phase shifted from said first phase to said second phase.

5,703,515
TIMING GENERATOR FOR TESTING IC

Akira Toyama, and Kazuhiro Shimizu, both of Tokyo, Japan, assignors to Yokogawa Electric Corporation, Tokyo, Japan

Filed Mar. 22, 1996, Ser. No. 620,776
Claims priority, application Japan, Apr. 20, 1995, 7-094847
Int. Cl.[6] H03K *5/04*
U.S. Cl. 327—294 **19 Claims**

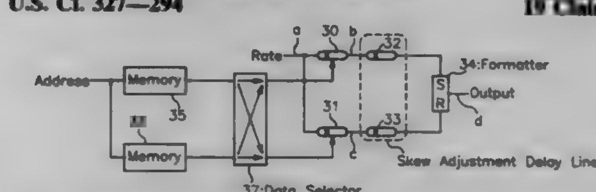

1. A timing generator for generating an output signal in accordance with a rate signal, comprising:
at least two delay lines for delaying said rate signal;
formatter means for receiving signals from said at least two delay lines, for determining rise and fall of an output signal by using said received signals, and for generating said output signal;
memory means for storing delay time data for said at least two delay lines; and
data selector means for supplying said delay time data from said memory means to said at least two delay lines by switching.

5,703,516
OFFSET CANCEL CIRCUIT AND OFFSET CANCEL SYSTEM USING THE SAME

Sumihiro Takashima, Tokyo, Japan, assignor to Oko Electric Industry Co., Ltd., Tokyo, Japan

Filed Mar. 27, 1996, Ser. No. 623,901
Claims priority, application Japan, Jun. 13, 1995, 7-146252
Int. Cl.[6] H03L *5/00*
U.S. Cl. 327—307 **5 Claims**

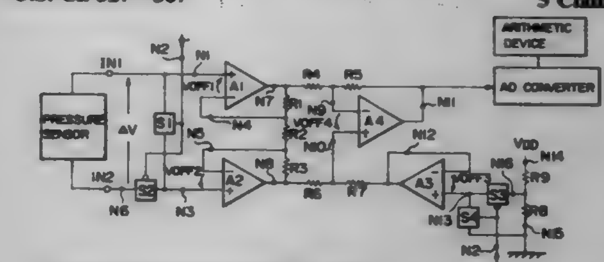

1. An offset cancel circuit comprising:
two input nodes to which first and second potentials are supplied in a first period from a device having an offset voltage, and to which third and fourth potentials are supplied in a second period, the first potential differing from the second potential, the third potential being substantially the same as the fourth potential;
an output node;
an amplifier circuit having inputs and outputs, the inputs of said amplifier circuit being electrically coupled to said two input nodes, said amplifier circuit providing fifth and sixth potentials in the first period in response to the first and second potentials, said amplifier circuit providing seventh and eighth potentials in the second period in response to the third and fourth potentials; and
a level shifting unit having inputs, an output and a level shifting node, the inputs of said level shifting unit being electrically coupled to the outputs of said amplifier circuit, the output of said level shifting unit being electrically coupled to said output node, said level shifting unit supplying in the first period a ninth potential to the level shifting node in response to a first level of a mode changing signal, said level shifting unit supplying in the first period a tenth potential in response to the fifth, sixth and ninth potentials, said level shifting unit supplying in the second period an eleventh potential to the level shifting node in response to a second level of the mode changing signal, said level shifting unit outputting in the second period a twelfth potential in response to the seventh, eighth and eleventh potentials, wherein the ninth potential differs from the eleventh potential.

5,703,517
POWER REDUCTION IN A TEMPERATURE COMPENSATING TRANSISTOR CIRCUIT

Theodore W. Houston, Richardson, Tex., assignor to Texas Insturments Incorporated, Dallas, Tex.

Continuation of Ser. No. 66,698, May 25, 1993, abandoned. This application Mar. 12, 1996, Ser. No. 615,576
Int. Cl.[6] H01L *35/00;* **G06G** *7/12*
U.S. Cl. 327—312 **29 Claims**

1. A circuit including a pre-inverter input signal and an inverter having an input, an output, and a drive transistor, said circuit comprising:
a regulating transistor connected in series with said drive transistor for limiting current in said drive transistor, said regulating transistor and said drive transistor being connected in series between a supply voltage and said output node with said regulating transistor connected between said drive transistor and said supply voltage; and
control circuitry connected to said pre-inverter input signal for supplying a voltage to a gate of said regulating transistor responsive to a predetermined current varying parameter, said

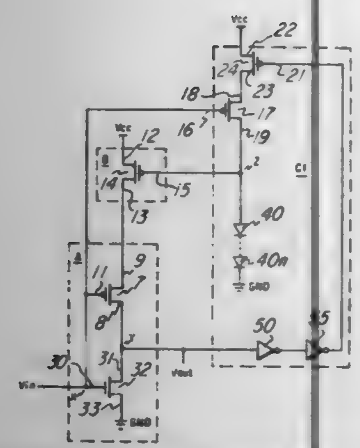

control circuitry comprising an element sensitive to said predetermined current varying parameter.

5,703,518

ABSOLUTE VALUE CIRCUIT CAPABLE OF PROVIDING FULL-WAVE RECTIFICATION WITH LESS DISTORTION

Syouhei Yamamoto, Miyazaki, Japan, assignor to Oki Electric Industry Co., Ltd., Tokyo, Japan

Continuation of Ser. No. 460,730, Jun. 2, 1995, abandoned. This application Nov. 22, 1996, Ser. No. 757,949

Claims priority, application Japan, Aug. 1, 1994, 6-179999

Int. Cl.[6] G06G *7/25*

U.S. Cl. 327—354 **7 Claims**

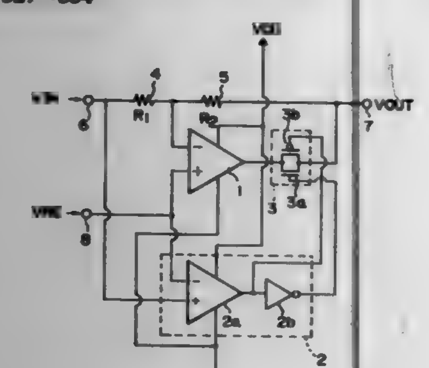

1. An absolute value circuit, comprising:
an input terminal to receive an input voltage;
an output terminal;
an input resistor;
a feedback resistor, the input resistor and the feedback resistor being coupled in series between the input and output terminals, the input resistor being coupled to the feedback resistor at an intermediate coupling node;
an operational amplifier having a first input, a second input, and an amplifier output, the first input of the operational amplifier being coupled to the intermediate coupling node, the second input of the operational amplifier receiving a reference voltage;
comparing means for determining whether or not the input voltage exceeds the reference voltage; and
a switch to electrically couple the amplifier output to the output terminal and the feedback resistor when the reference voltage exceeds the input voltage and to electrically isolate the amplifier output from the output terminal and the feedback resistor when the input voltage exceeds the reference voltage, the switch being coupled to the comparing means.

5,703,519

DRIVE CIRCUIT AND METHOD FOR CONTROLLING THE CROSS POINT LEVELS OF A DIFFERENTIAL CMOS SWITCH DRIVE SIGNAL

David T. Crook, Summerfield, and Ernest T. Stroud, Greensboro, both of N.C., assignors to Analog Devices, Inc., Norwood, Mass.

Filed Jan. 30, 1996, Ser. No. 593,843

Int. Cl.[6] H03K *17/13; 17/16; 19/03*

U.S. Cl. 327—387 **27 Claims**

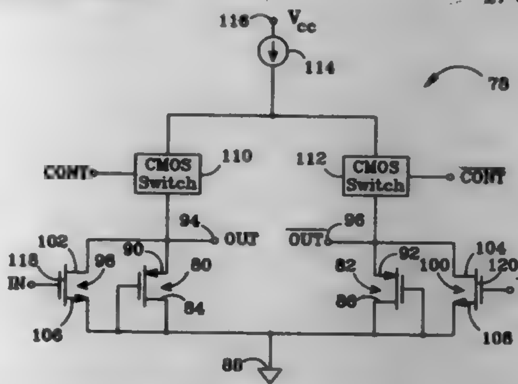

27. A precision limited switch, comprising:
a pair of input terminals for receiving a complementary pair of digital input signals that switch between on and off voltage levels at an approximately 50% duty cycle and, at a pair of cross points, intersect at a first cross point voltage that is approximately halfway between its on and off voltage levels, said pair of digital input signals together defining a differential input drive signal that switches at a substantially 50% duty cycle;
a drive circuit comprising:
a reference terminal for receiving a reference voltage;
a pair of output terminals;
a pair of diode connected PMOS load transistors having gate-drain junctions that are connected to said reference terminal and having sources that are electrically coupled to the respective output terminals;
a pair of NMOS load transistors having gates that receive the pair of digital input signals, sources that are connected to said reference terminal, and drains that are connected to the respective output terminals, said NMOS load transistors turning fully on in response to the digital input signals' high voltage levels;
a current source that supplies a first signal current; and
a pair of single-ended CMOS switches that switch in response to the digital input signals to direct the first signal current to the PMOS load transistor opposite the fully on NMOS load transistor thereby switching a complementary pair of shaped digital signals at the output terminals between high voltage levels that are offset from the reference voltage by the PMOS load transistors' gate-to-source voltages and low voltage levels that are substantially equal to the reference voltage, said shaped signals together defining a differential shaped drive signal; and
a differential CMOS switch that comprises a pair of CMOS output transistors having respective gates that form a differential input for receiving the differential shaped drive signal, drains that form a differential output, and sources, said sources being connected at a reference node to receive a second signal current, said differential shaped drive signal causing the pair of CMOS output transistors to turn fully on and fully off, respectively, so that substantially all of the second signal current flows through the output transistor that is fully on to switch a pair of complementary analog signals at the output transistors' respective drains, which together define a differential output voltage signal across the differential output, the flow of substantially all of the second signal current through one said output transistor producing a fully switched voltage level at said reference node that is offset from the voltage level at the gate of the fully on output transistor by that transistor's gate-to-source voltage, said digital shaped drive voltage signal having a zero voltage level at the cross points that causes the second signal current to be apportioned equally between the pair of output transistors so that their gate-to-source voltages are reduced,
said PMOS and NMOS load transistors having channel geometries defined by their gate width and length that together with the amount of said first signal current set the shaped digital signals' duty cycle at a non-50% level so that a) the shaped digital signals cross point voltage levels compensate for the reduction in the output transistors' gate-to-source voltages at the cross points so that the voltage level at the reference node is maintained at the switched voltage and b) the duty cycles of the differential shaped drive signal and the differential output voltage signal are approximately 50%.

5,703,520

INTEGRATED INDUCTIVE LOAD SNUBBING DEVICE USING A MULTI-COLLECTOR TRANSISTOR

John Mark Dikeman, and Mark Wendell Gose, both of Kokomo, Ind., assignors to Delco Electronics Corporation, Kokomo, Ind.

Filed Apr. 1, 1996, Ser. No. 617,705

Int. Cl.[6] H03K *17/72; 17/64*

U.S. Cl. 327—439 **5 Claims**

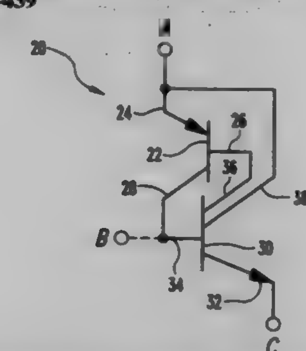

1. An inductive load snubbing device comprising:
a PNP transistor having an emitter defining a first terminal of the device, a base, and a collector; and
an NPN transistor having an emitter defining a second terminal of the device, a base connected to the collector of said PNP transistor, a first collector connected to the base of said PNP transistor and a second collector connected to the emitter of said PNP transistor;
wherein the second collector, base and emitter of said NPN transistor form a power transistor, and wherein the emitter, base and collector of said PNP transistor, and the emitter of said NPN transistor form an SCR for driving the power transistor.

5,703,521

CIRCUIT CONFIGURATION FOR MONITORING THE TEMPERATURE OF A POWER SEMICONDUCTOR COMPONENT

Josef-Matthias Gantioler; Holger Heil, both of Munich, and Jenoe Tihanyi, Kirchheim, all of Germany, assignors to Siemens Aktiengesellschaft, Munich, Germany

Filed Mar. 29, 1996, Ser. No. 625,634

Claims priority, application Germany, Mar. 29, 1995, 195 11 505.8

Int. Cl.[6] H01L *35/00;* **H03K** *5/153*

U.S. Cl. 327—512 **8 Claims**

1. A circuit configuration for monitoring a temperature of a power semiconductor component, comprising:
a bipolar semiconductor element connected in a thermally conducting manner a power semiconductor component, said bipo-

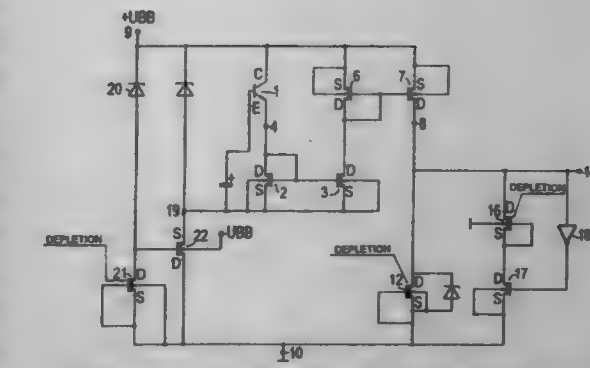

lar semiconductor element having a blocking-state current, and a magnitude of the blocking-state current being a measure of a temperature of the power semiconductor component;
an amplifying current mirror connected to receive and amplify the blocking-state current;
a depletion MOSFET generating a reference current, said depletion MOSFET being connected as a constant current source outputting a current greater than a mirrored current output by said amplifying current mirror at a normal temperature, and less than the mirrored current at an excess temperature of the power semiconductor component; and
means for determining when the mirrored current exceeds the reference current.

5,703,522

SWITCHED SUBSTRATE BIAS FOR MOS-DRAM CIRCUITS

Kazutami Arimoto, and Masaki Tsukude, both of Itami, Japan, assignors to Mitsubishi Denki Kabushiki Kaisha, Tokyo, Japan

Division of Ser. No. 350,064, Nov. 29, 1994, Pat. No. 5,610,533. This application Sep. 5, 1996, Ser. No. 708,429

Claims priority, application Japan, Nov. 29, 1993, 5-298084; Apr. 27, 1994, 6-090303

Int. Cl.[6] G05F *3/16;* **H03K** *17/16*

U.S. Cl. 327—534 **13 Claims**

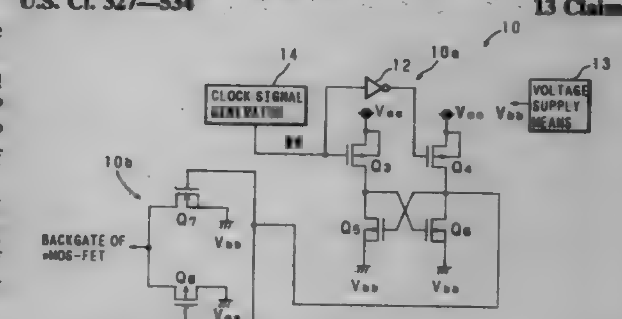

1. A MOS-DRAM array, comprising:
a plurality of memory cells arranged in rows and columns, each memory cell including an MOS-FET to which a first potential or a second potential is supplied as a substrate potential;
a voltage supply means for supplying said first and second potentials; and
means for providing one of said first potential and said second potential to the MOS-FET of each memory cell as said substrate potential according to an operation state of said MOS-DRAM array, wherein
said means for providing one of said first potential and said second potential includes
a level shift circuit receiving a signal representative of said operation state of said MOS-DRAM array and outputting a control signal in accordance with said operation state of said MOS-DRAM, and
a switch circuit receiving the control signal output from the level shift circuit to control switching between said first potential and said second potential to supply either the first

potential or second potential as said substrate potential to the MOS-FET of each memory cell as said substrate potential.

5,703,523

FILTER CIRCUIT

Takahiro Kusano, Yokohama, Japan, assignor to Kabushiki Kaisha Toshiba, Kawasaki, Japan

Filed Apr. 26, 1996, Ser. No. 641,076

Claims priority, application Japan, Apr. 26, 1995, 7-102752

Int. Cl.⁶ H03K *5/01;5/125*

U.S. Cl. 327—553 **4 Claims**

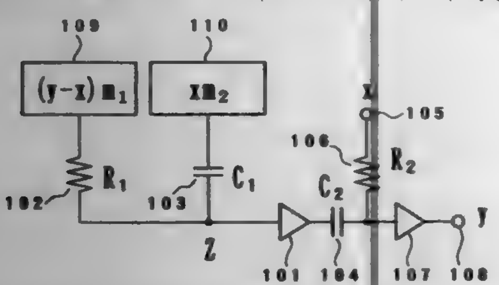

1. A filter circuit having a signal input terminal and a signal output terminal, comprising:
- a first buffer having an input end connected to a first resistor and to a first capacitor;
- a second capacitor having one end connected to an output end of the first buffer;
- a second resistor having one end connected to the signal input terminal;
- a second buffer having an input end connected to the other end of the second resistor and to the other end of the second capacitor, and an output end connected to the signal output terminal;
- first signal supplying means for supplying a signal proportional to a difference between an output signal of the second buffer and a signal inputted from the signal input terminal, to the input end of the first buffer through the first resistor; and
- second signal supplying means for supplying a signal proportional to the signal inputted from the signal input terminal, to the input end of the first buffer through the first capacitor.

5,703,524

PIECE-WISE LINEAR APPROXIMATION OF A DB LINEAR PROGRAMMABLE GAIN AMPLIFIER

Xiaole Chen, Milpitas, Calif., assignor to Exar Corporation, Fremont, Calif.

Filed Apr. 16, 1996, Ser. No. 631,900

Int. Cl.⁶ G06G *7/12*

U.S. Cl. 327—560 **15 Claims**

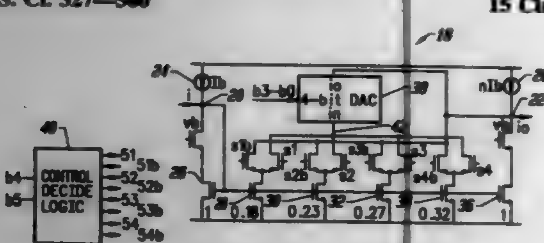

1. A programmable gain amplifier comprising:
- a plurality of linear gain segments, each of said linear gain segments having a different gain;
- a multiple bit digital control input; and
- selection logic, coupled to said multiple bit digital control input, configured to selectively enable desired ones of said linear gain segments.

5,703,525

LOW COST SYSTEM FOR FSK DEMODULATION

Albert Winterer, Furth, Germany, assignor to Texas Instruments Incorporated, Dallas, Tex.

Filed Oct. 9, 1996, Ser. No. 731,097

Int. Cl.⁶ H03D *3/00;* **H04L** *27/14*

U.S. Cl. 329—300 **10 Claims**

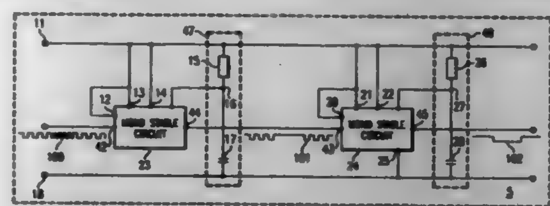

1. A demodulation circuit for demodulating a frequency shift keyed signal, said circuit comprising:
- a first circuit for generating an intermediate signal as a function of high frequency intervals and low frequency intervals of said frequency shift keyed signal; and
- a second circuit for generating a demodulated output signal as a function of said intermediate signal, said output of said first circuit being electrically connected an input of said second circuit.

5,703,526

CIRCUIT FOR DETECTING THE LOCKED CONDITION OF PSK OR QAM DEMODULATORS

Jacques Meyer, Corenc, France, assignor to SGS-Thomson Microelectronics S.A., Saint Genis, France

Filed Jul. 1, 1996, Ser. No. 675,632

Claims priority, application France, Jul. 6, 1995, 95 08401

Int. Cl.⁶ H04L *27/22*

U.S. Cl. 329—304 **3 Claims**

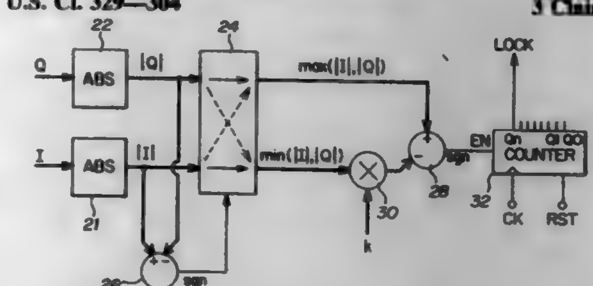

1. A method for detecting a locked condition of a demodulator of QPSK signals that may have discrete levels defining a constellation of four nominal points in a plane, including the steps of:
- defining reference areas about the nominal points, a reference area being defined between two lines crossing the origin of the constellation plane; and
- indicating a locked condition if a ratio of points occurring in the reference areas is above a probability for points to occur in the reference areas when the demodulator is wrongly adjusted;
- wherein said lines are in the number of four with respective slopes of 2, ½, −½, and −2.

5,703,527

FREQUENCY MODULATED SIGNAL DEMODULATOR CIRCUIT AND COMMUNICATION TERMINAL EQUIPMENT

Jun Iwasaki, Tokyo, Japan, assignor to Sony Corporation, Tokyo, Japan

Filed Apr. 4, 1996, Ser. No. 627,581

Claims priority, application Japan, Apr. 13, 1995, 7-112540

Int. Cl.⁶ H03D *3/00*

U.S. Cl. 329—336 **20 Claims**

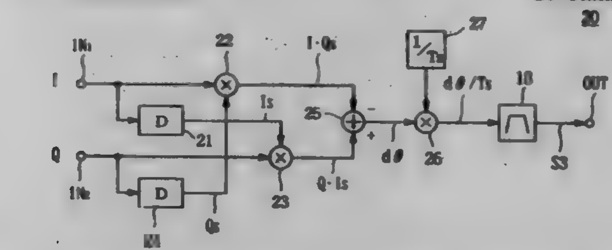

1. A demodulator apparatus for demodulating a frequency modulated signal comprising:
- orthogonal detection means for orthogonal-detecting said frequency modulated signal to generate a first digital output signal and a second digital output signal that have a predetermined difference therebetween;
- first delay means for delaying said first digital output signal for a predetermined time;
- second delay means for delaying said second digital output signal for said predetermined time;
- first multiplying means for multiplying said first digital output signal by an output signal of said second delay means;
- second multiplying means for multiplying said second digital output signal by an output signal of said first delay means;
- subtracting means for subtracting an output signal of said first multiplying means from an output signal of said second multiplying means;
- third multiplying means for multiplying an output signal of said subtracting means by a predetermined value; and
- filter means for filtering an output signal of said third multiplying means.

5,703,528

AUDIO AMPLIFIER TURN-OFF CONTROL CIRCUIT

Daniela Nebuloni, Bareggio, and Andrea Fassina, Milan, both of Italy, assignors to SGS-Thomson Microelectronics S.r.l., Agrate Brianza, Italy

Continuation of Ser. No. 65,672, May 21, 1993, Pat. No. 5,420,535. This application Nov. 10, 1994, Ser. No. 337,108

Int. Cl.⁶ H03F *1/14;* **H04B** *15/00;* **H03B** *21/00*

U.S. Cl. 330—51 **15 Claims**

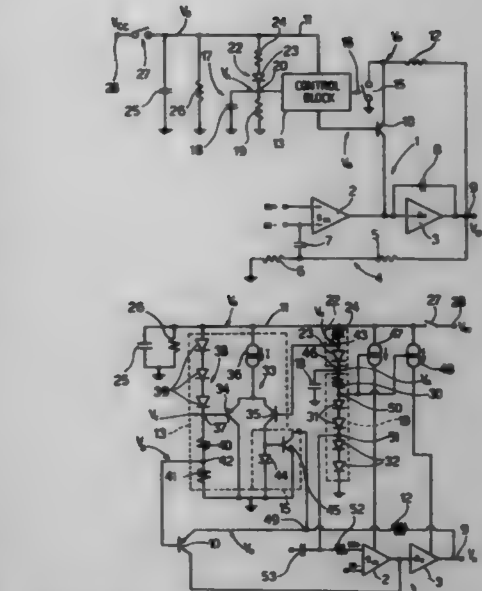

14. A circuit for turn-off control of an audio amplifier supplied by a supply line with a supply voltage, the circuit comprising:
- an input terminal for input of an audio signal;
- an output terminal with an output voltage; and
- a transistor to couple said output terminal to the supply line so as to lock said output voltage to the supply voltage in the event of a fall in the supply voltage said transistor having a first terminal connected to said output terminal of the audio amplifier, a second terminal connected to said input terminal of the audio amplifier, and a control terminal connected to a control stage for controlling said transistor, said first terminal of said transistor also being connected to a reference potential line via a switch element controlled by said control stage.

5,703,529

AMPLIFIER CIRCUIT WITH REDUCED DC POWER RELATED TRANSIENTS

Parviz Ghaffaripour, Saratoga; Arthur J. Kalb, San Jose; Nick M. Johnson, Los Altos, and Sai L. Ting, San Jose, all of Calif., assignors to National Semiconductor Corporation, Santa Clara, Calif.

Continuation-in-part of Ser. No. 542,596, Oct. 13, 1995, Pat. No. 5,642,074, and Ser. No. 546,910, Oct. 23, 1995, Pat. No. 5,648,742. This application Mar. 1, 1996, Ser. No. 609,726

Int. Cl.⁶ H03F *1/26*

U.S. Cl. 330—51 **40 Claims**

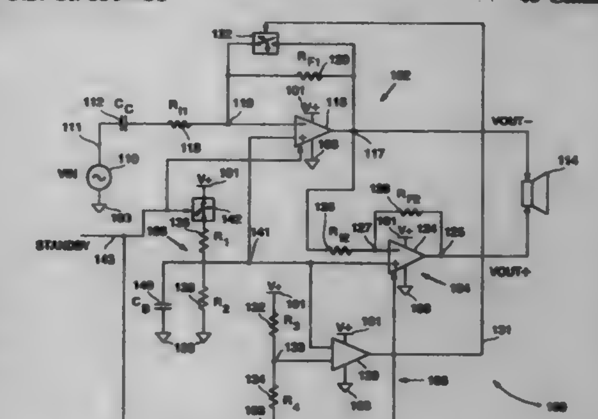

5. A method of operating an amplifier circuit for amplifying a signal while using a single power supply and a selectively variable reference voltage for reducing turn-on transients, said method comprising the steps of:
- biasing a first amplifier between a power supply voltage and a circuit ground;
- receiving a first input signal and a reference voltage having a selectively variable magnitude;
- generating a first output signal with a magnitude which varies in relation to and is approximately equal to a sum of said reference voltage and a selected multiple of said first input signal; and
- generating said reference voltage, wherein during a first time period said reference voltage magnitude changes linearly from approximately said circuit ground toward a fixed refer-

ence voltage magnitude, and during a second time period subsequent to said first time period said reference voltage remains at said fixed reference voltage magnitude.

5,703,530
RADIO FREQUENCY AMPLIFIER HAVING IMPROVED CTB AND CROSS MODULATION CHARACTERISTICS
Yuzo Sato; Katsumi Kaneko, and Yasushi Saito, all of Saitama, Japan, assignors to Yagi Antenna Co., Ltd., Tokyo, Japan
Filed Mar. 29, 1996, Ser. No. 623,700
Claims priority, application Japan, Oct. 6, 1995, 7-259841
Int. Cl.⁶ H03F *1/32*
U.S. Cl. 330—149 37 Claims

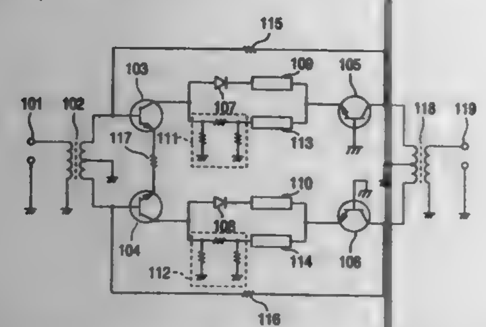

1. A radio-frequency amplifier comprising:
at least one distortion generation circuit including a first circuit having a nonlinear element and a first delay line coupled in series, and a second circuit having an attenuation element and a second delay line coupled in series, said first and second circuits being coupled in parallel;
said at least one distortion generation circuit is coupled to at least one of an input and an output of a radio frequency amplification stage of said radio-frequency amplifier, and said first and second delay lines are configured to create a delay time change in a signal input level of a signal input to said radio-frequency amplification stage which opposes a delay time change in said signal input level caused by a delay time difference between said input and output of said radio-frequency amplification stage.

5,703,531
PREDISTORTION LINEARIZER AND METHOD EMPLOYING UNIPLANAR MAGIC T HYBRIDS
Steven A. Vaughn, Sun City, and James A. Verkade, Lakewood, both of Calif., assignors to Hughes Aircraft Company, Los Angeles, Calif.
Continuation-in-part of Ser. No. 476,967, Jun. 7, 1995, abandoned. This application Aug. 28, 1996, Ser. No. 703,166
Int. Cl.⁶ H03F *1/32*
U.S. Cl. 330—149 18 Claims

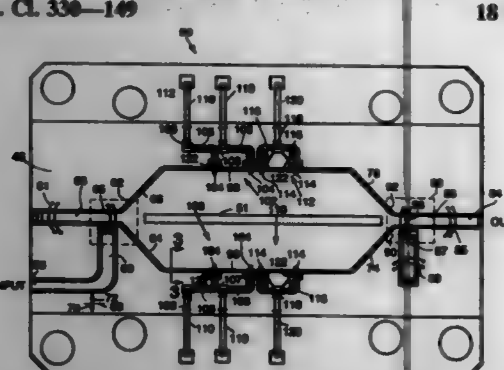

16. A method of performing a predistortion linearization of a signal, comprising the steps of:
providing a planar substrate having a first slotline and a second slotline thereon;
dividing the signal into a linear portion and a nonlinear portion using a Magic T power divider;
transmitting the linear portion along the first slotline;
transmitting the nonlinear portion along the second slotline;
adjusting the relative phase and amplitude of the linear portion and the nonlinear portion as they are transmitted along the first slotline and the second slotline; and
combining the linear portion and the nonlinear portion 180° out of phase.

5,703,532
FULLY DIFFERENTIAL SELF-BIASED SIGNAL RECEIVER
Hyun Jong Shin, Ridgefield, Conn., and Peter Hong Xiao, Mohegan Lake, N.Y., assignors to International Business Machines Corporation, Armonk, N.Y.
Filed Jan. 18, 1996, Ser. No. 588,218
Int. Cl.⁶ H03F *3/45*
U.S. Cl. 330—253 35 Claims

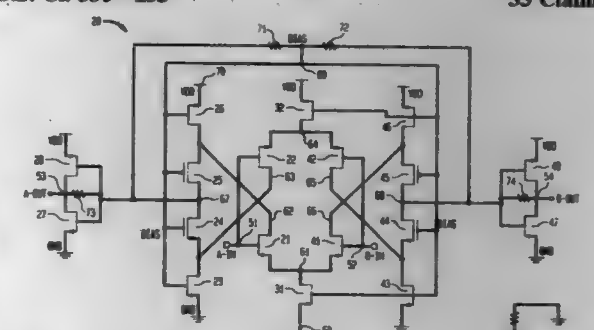

32. A circuit for producing and using a self-bias voltage to bias at least one bias-input of a local complementary circuit, said device comprising:
a pair of biasing stages, each of said biasing stages having a biasing output; and
a bias circuit coupled between said biasing outputs, and wherein said bias circuit includes a voltage divider having a divider output producing said bias voltage.

5,703,533
BICMOS OPERATIONAL AMPLIFIER FOR SWITCH/CAPACITOR CIRCUITS
Gerhard Nebel, Immenstadt; Georg Georgakos, Fraunberg, and Ulrich Kleine, Unterhaching, all of Germany, assignors to Siemens Aktiengesellschaft, Munich, Germany
PCT No. PCT/DE94/01027, § 371 Date Mar. 12, 1996, § 102(e) Date Mar. 12, 1996, PCT Pub. No. WO95/08215, PCT Pub. Date Mar. 23, 1995
PCT Filed Sep. 7, 1994, Ser. No. 612,874
Claims priority, application Germany, Sep. 15, 1993, 43 31 362.0
Int. Cl.⁶ H03F *3/45;3/16*
U.S. Cl. 330—253 7 Claims

1. A BiCMOS operational amplifier for switched capacitor circuits, comprising
an MOS differential amplifier stage, which is supplied with a reference current by a current source and which has a respective load element in each of two paths of the MOS differential amplifier stage;
two output paths each of the two output paths having a respective series circuit formed by a respective further load element and two respective bipolar transistors, the respective bipolar transistors forming a cascade;

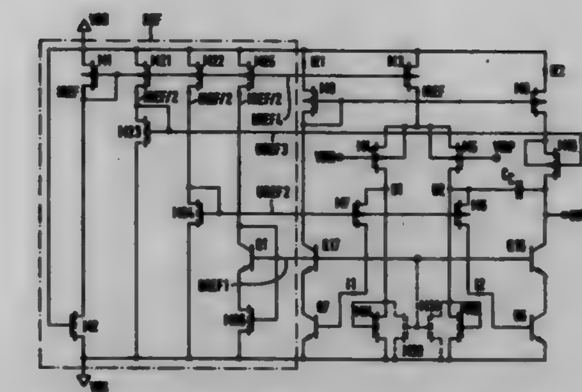

the base of each of the bipolar transistors being supplied with a first reference voltage and one of the further respective load elements being connected to an output of the operational amplifier;
a respective bipolar transistor of a respective cascade can be driven, via a respective PMOS transistor to whose respective gate a second reference voltage is applied, directly by a voltage across the respective load element of the respective path of the MOS differential amplifier stage.

5,703,534
OPERATIONAL TRANSCONDUCTANCE AMPLIFIER WITH GOOD LINEARITY
Young Hwan Kim, Seoul, Rep. of Korea, assignor to Korea Telecommunication Authority, Seoul, Rep. of Korea
Filed Dec. 28, 1995, Ser. No. 579,952
Claims priority, application Rep. of Korea, Dec. 29, 1994, 1994-38474
Int. Cl.⁶ H03F *3/16;3/45*
U.S. Cl. 330—277 1 Claim

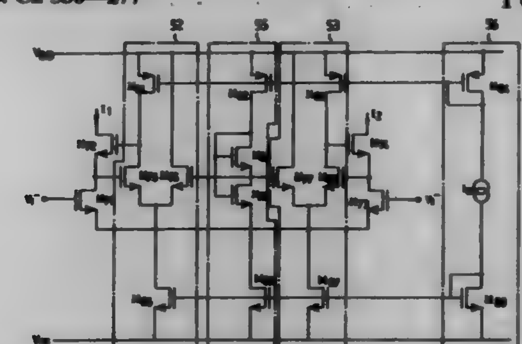

1. An operational transconductance amplifier with a good linearity, comprising
a first transistor coupled to a negative supply voltage input signal for receiving the negative voltage input signal and converting said negative voltage input signal to a first current signal;
a second transistor coupled to a drain of said first transistor for maintaining drain voltage of said first transistor and transferring the first current signal from said first transistor to an output terminal;
a third transistor coupled to a positive supply voltage input signal for receiving the positive voltage input signal and converting said positive voltage input signal to a second current signal;
a fourth transistor coupled to a drain of said third transistor for maintaining constant drain voltage of said third transistor and transferring the second current signal passing through said third transistor to an output terminal;
a reference voltage generation means for generating a reference voltage;
a first operational amplifier having its negative input terminal coupled to a junction between said first transistor and said third transistor, its positive input terminal coupled to an output terminal of said reference voltage generation means, and its output terminal coupled to a gate terminal of said second transistor;
a second operational amplifier having its negative input terminal coupled to a junction between said third transistor and said fourth transistor, its positive input terminal coupled to an output terminal of said reference voltage generation means, and its output terminal coupled to a gate terminal of said fourth transistor; and
a current mirror for connecting said first and second operational amplifiers and said reference voltage generation means to said supply voltage source and a ground voltage source, said current mirror for obtaining total current.

5,703,535
CIRCUIT ARRANGEMENT FOR AMPLITUDE-DEPENDENT ATTENUATION OF A TELEVISION SIGNAL
Matthias Peters, Neu Wulmstorf, Germany, assignor to U.S. Philips Corporation, New York, N.Y.
Filed Dec. 1, 1995, Ser. No. 565,772
Claims priority, application Germany, Dec. 16, 1994, 44 44 899.6
Int. Cl.⁶ H03G *3/30*
U.S. Cl. 330—278 16 Claims

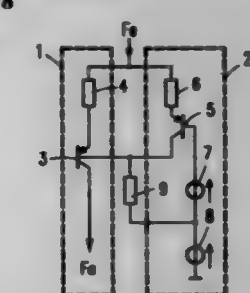

1. A circuit arrangement for amplitude-dependent attenuation of a television signal, said arrangement supplying amplitude values of the television signal below a predeterminable limit value as an output signal amplified by a first gain factor, and, at amplitude values above the predeterminable limit value, supplying a part of the amplitude below the predeterminable limit value as an output signal amplified by the first gain factor and parts of the amplitude above the predeterminable limit value as an output signal amplified by a second gain factor, the second gain factor being chosen to be smaller than the first gain factor, characterized in that the television signal is a current signal which is applied to a main branch and a sub-branch in which said main branch and said sub-branch each comprises at least one transistor, said current signal being applied to an emitter of said at least one transistor via a resistor in each of said main branch and said sub-branch, a base of said at least one transistor in each of said main branch and said sub-branch being biased, with respect to a reference potential, by respective DC sources, a collector current of the at least one transistor in the main branch essentially representing the output signal, and the predeterminable limit value being predetermined by a difference between base potentials of the at least one transistors in the main branch and the sub-branch and the second gain factor being determined by a resistance ratio between the resistors coupled to the emitters of said at least one transistors in said main branch and said sub-branch.

5,703,536

LIQUID COOLING SYSTEM FOR HIGH POWER SOLID STATE AM TRANSMITTER

Alan Merle Davis, and Joseph David Blickhan, both of Quincy, Ill., assignors to Harris Corporation, Melbourne, Fla.

Filed Apr. 8, 1996, Ser. No. 629,343

Int. Cl.⁶ H03F *3/04;3/68*

U.S. Cl. 330—289 13 Claims

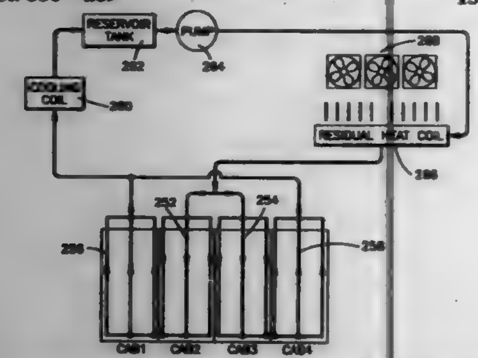

1. A liquid cooling system apparatus for removing heat generated by a power amplifier, comprising:

a power amplifier characterized in that it generates heat;

a thermally conductive block mounted to said power amplifier such that said block dissipates heat generated by said power amplifier;

a liquid cooled plate having a thermal block and at least one coolant pipe running through the thermal block, said coolant pipe containing a liquid coolant flowing through said pipe; and

means for resiliently biasing said thermally conductive block against said thermal block of said liquid cooled plate so that the heat generated by said power amplifier is conductively transferred from said amplifier to the liquid coolant flowing through the at least one coolant pipe.

5,703,537

PHASE-LOCKED LOOP CLOCK CIRCUIT FOR GENERATION OF AUDIO SAMPLING CLOCK SIGNALS FROM VIDEO REFERENCE SIGNALS

Christopher J. Bland; Jan Gazda, and Barry E. Olsen, all of San Jose, Calif., assignors to MicroClock Incorporated, San Jose, Calif.

Filed Jul. 3, 1996, Ser. No. 678,449

Int. Cl.⁶ H03L *7/18*

U.S. Cl. 331—1 A 12 Claims

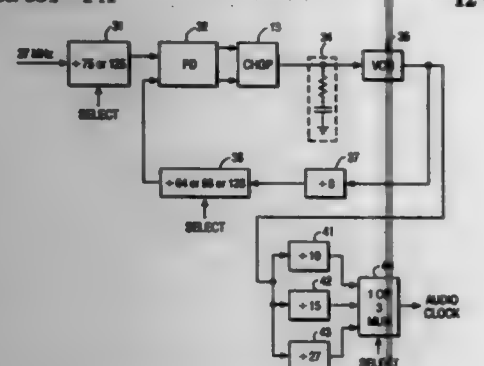

6. A circuit for generating audio clock signals at an output terminal from reference clock signals at a reference frequency received at an input terminal, said circuit comprising

a phase-locked loop circuit generating a PLL output signal at a PLL output frequency at a PLL output terminal;

a plurality of second fixed divider circuits, each second fixed divider circuit connected to said PLL output terminal for generating an output signal at said PLL output frequency divided by an integer D, each integer D differing from that of another second fixed divider circuit; and

a multiplexer having input terminals connected to output terminals of said second fixed divider circuits, said multiplexer selectively connecting an output terminal of one of said second fixed divider circuits to said circuit output terminal responsive to a programmable control signal.

5,703,538

RADAR EXCITER LOCAL OSCILLATOR PHASE LOCK ACQUISITION CONTROL CIRCUIT

Chester K. C. Lo, Los Angeles, and Paul I. Tanaka, Torrance, both of Calif., assignors to Hughes Electronics, Los Angeles, Calif.

Filed Sep. 18, 1996, Ser. No. 715,681

Int. Cl.⁶ H03L *7/12;7/16;7/20*

U.S. Cl. 331—4 4 Claims

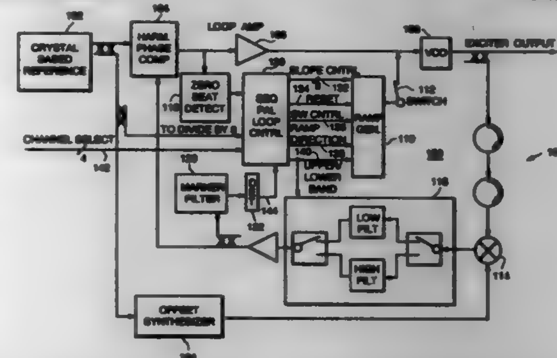

1. In a radar exciter including a reference generator for generating a reference signal having a precise reference frequency, a phase lock loop responsive to the reference signal for producing the exciter output signal, the loop closed around a phase comparator responsive to the reference signal and the exciter output signal and a voltage controlled oscillator (VCO) responsive to an output of the phase comparator for producing the exciter output signal, and a rapid phase lock acquisition circuit having an output connected to the VCO during a phase acquisition mode for driving the VCO to a commanded frequency and rapidly achieving phase lock, a programmable controller and ramp generator circuit comprising:

a controller comprising a programmable microsequencer, a programmable logic array, and a counter circuit, the controller receiving a plurality of input signals and in response to the input signal generating a plurality of digital output control signals; and

a ramp generator circuit responsive to the digital output control signals for generating ramp signals at the output connected to the VCO during a phase acquisition mode; and

wherein said input signals include a zero beat signal used by the controller to count harmonics and indicate out-of-lock conditions, digital channel select signals for instructing the controller which frequency or channel to which the phase lock loop is to be phase locked, a marker filter signal providing information as to where the exciter output signal is with respect to the ramp signals provided to the VCO, and the reference signal whose frequency is divided by the counter to provide clock signals for the controller; and

wherein the digital output control signals include digital ramp slope control signals, digital ramp start/stop signals and digital ramp direction signals.

5,703,539

APPARATUS AND METHOD FOR CONTROLLING THE LOOP BANDWIDTH OF A PHASE LOCKED LOOP

Steven Frederick Gillig, Roselle, and Jeannie Han Kosiec, Schaumburg, both of Ill., assignors to Motorola, Inc., Schaumburg, Ill.

Filed Dec. 17, 1993, Ser. No. 145,841

Int. Cl.⁶ H03L *7/093;7/18*

U.S. Cl. 331—16 18 Claims

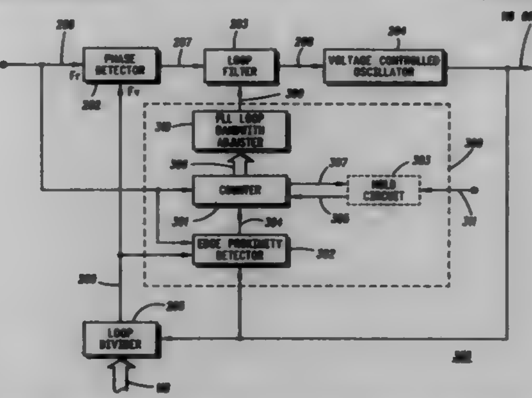

1. In a phase lock loop (PLL) that generates an output frequency signal responsive to a reference frequency signal, the output frequency signal and the reference frequency signal are each characterized by frequency and phase, a phase error is indicative of the difference between the phase of the reference frequency signal and the phase of the output frequency signal, the PLL operative in a first loop bandwidth state to maintain the output frequency signal substantially at a frequency indicative of the reference frequency signal, and operative in a second loop bandwidth state to converge the output frequency signal to the frequency indicative of the reference frequency signal, a method for controlling the loop bandwidth of the PLL comprising the steps of:

identifying the phase error as either desirable or undesirable;

when the phase error is identified as desirable:

determining a rate of change of the phase error over a first predetermined time period to provide an indication of frequency error between the frequency of the reference frequency signal and the frequency of the output frequency signal; and

controlling a transition between the first and second loop bandwidth states of the PLL responsive to the indication of the frequency error; and

when the phase error is identified as undesirable, operating in the second loop bandwidth state.

5,703,540

VOLTAGE-CONTROLLED CRYSTAL OSCILLATOR WITH EXTENDED RANGE

Jan Gazda; Jagdeep Bal, and Christopher J. Bland, all of San Jose, Calif., assignors to MicroClock Incorporated, San Jose, Calif.

Filed Aug. 27, 1996, Ser. No. 703,666

Int. Cl.⁶ H03L *7/06;7/18*

U.S. Cl. 331—16 16 Claims

1. A voltage-controlled crystal oscillator circuit comprising

a crystal oscillator circuit having an input terminal and an output node, said crystal oscillator circuit generating at said output node a signal having a frequency f_{ref} responsive to a voltage at said input terminal;

a phase-locked loop having an input node connected to said output node of said crystal oscillator and an output node, said phase-locked loop generating a signal at said output node having a frequency f_o, said phase-locked loop having a first

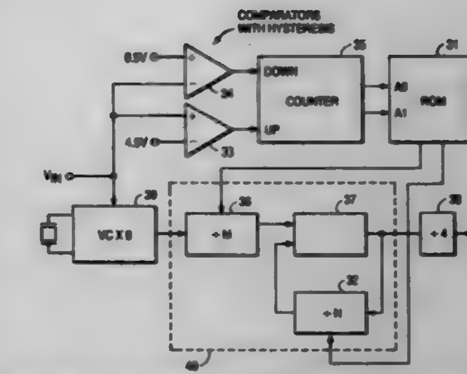

divider circuit dividing said f_{ref} frequency by a first variable integer M and a second divider circuit dividing said f_o frequency by a second variable integer N; and

means for varying M and N responsive to said input terminal voltage;

whereby said voltage-controlled crystal oscillator circuit has an increased frequency range.

5,703,541

RING OSCILLATOR WITH TWO INVERTERS PER UNIT INVERTER CIRCUIT

Teruya Nakashima, Kanagawa, Japan, assignor to Mitsubishi Denki Kabushiki Kaisha, and Mitsubishi Electric Engineering Co., Ltd, both of Tokyo, Japan

Continuation of Ser. No. 537,120, Sep. 29, 1995, abandoned. This application Mar. 20, 1997, Ser. No. 821,315

Claims priority, application Japan, Jun. 5, 1995, 7-137870

Int. Cl.⁶ H03B *5/24*

U.S. Cl. 331—57 9 Claims

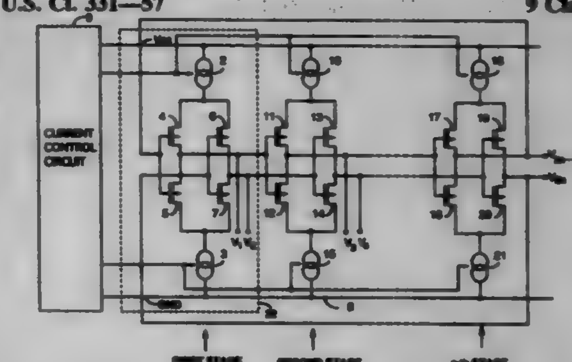

1. Ring oscillator having odd numbers of unit inverters, said unit inverters comprising:

first and second inverter portions connected between first and second nodes in parallel, each inverter portion including P channel transistor connected between said first node and an output node thereof outputting a clock signal, and N channel transistor connected between said second node and said output node the output from the output node of said first inverter portion in each stage circulated through the ring, the output from the output node of said second inverter portion in each stage circulated through the ring;

a first constant current source connected between a voltage source node and said first node; and

a second constant current source connected between a ground potential node and said second node.

5,703,542
COMPACT TEMPERATURE STABILIZED CRYSTAL OSCILLATOR
Thomas P. Biandino, Cottage Grove, Wis., assignor to Locus Incorporated, Madison, Wis.
Filed Aug. 28, 1996, Ser. No. 704,187
Int. Cl.⁶ H03B *5/04;5/36*
U.S. Cl. 331—70 **11 Claims**

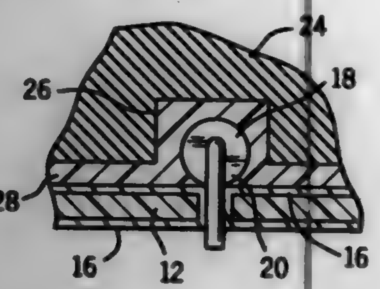

1. A temperature stabilized crystal oscillator comprising:
a circuit board;
at least one heater mounted to the circuit board;
heater control circuitry including a temperature sensor mounted to the circuit board and communicating with the heater to control it to provide a predetermined temperature at the temperature sensor;
a tuned crystal;
crystal driving circuitry mounted to the circuit board to electrically drive the tuned crystal at a predetermined frequency; and
a solid heat spreader in thermal communication with the tuned crystal, the circuit board, the heater, the temperature sensor, and at least a portion of the crystal driving circuitry.

5,703,543
CURRENT LIMITED CROSS-COUPLED OSCILLATORS
Clive Roland Taylor, 1 Cherry Croft, Welwyn Garden City, Hertfordshire, England, AL8 7QU
Filed May 6, 1996, Ser. No. 643,759
Int. Cl.⁶ H03B *5/36*
U.S. Cl. 331—116 FE **4 Claims**

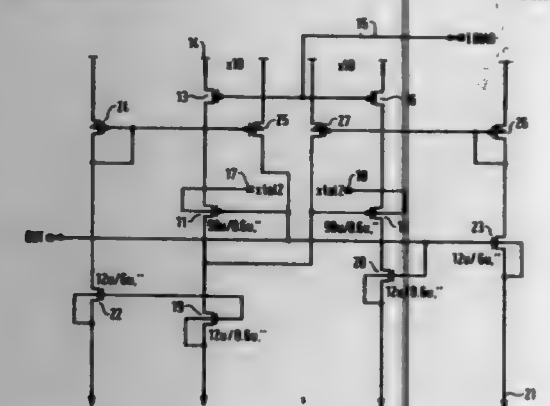

1. An oscillator circuit comprising:
a first switching transistor and a second switching transistor, each having a control node and a load current node, the control node of the first transistor being connected to the load current node of the second switching transistor and the control node of the second transistor being connected to the load current node of the first switching transistor;
a first current mirror for the load current of the first transistor;
a second current mirror for the load current of the second transistor;
a third current mirror connected to said first current mirror and which mirrors a small proportion of the load current of the first switching transistor to the load current node of the second switching transistor; and
a fourth current mirror connected to the second current mirror and which mirrors a small proportion of the load current of the second switching transistor to the load current node of the first switching transistor;
whereby said current mirrors drive load currents of the switching transistors into equilibrium.

5,703,544
RF PRINTED CIRCUIT MODULE AND METHOD OF MAKING SAME
William Witherspoon Hays III, Lynchburg, Va., assignor to Ericsson Inc., Research Triangle Park, N.C.
Filed Mar. 13, 1996, Ser. No. 615,653
Int. Cl.⁶ H03H *7/01;* **G01R** *27/04*
U.S. Cl. 333—185 **36 Claims**

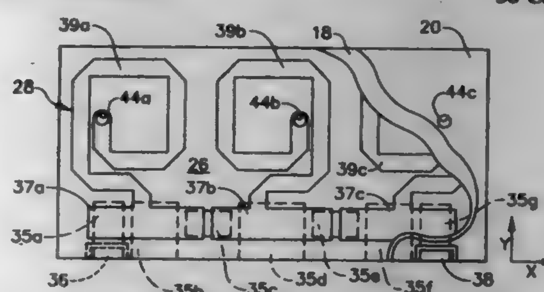

1. An electronic module for an RF device, comprising:
(a) a first single-clad sheet including a dielectric layer having a metal layer attached to a top surface of said dielectric layer;
(b) a second single-clad sheet including a dielectric layer having a metal layer attached to a bottom surface of said dielectric layer;
(c) a double-clad sheet including a dielectric layer having a first metal layer attached to a top surface of said dielectric layer and a second metal layer attached to a bottom surface of said dielectric layer, wherein said first and second metal layers are etched to form desired lumped and distributed circuit elements, said double-clad sheet being positioned between and attached to said first and second single-clad sheets;
(d) edge-plating along the perimeter of said electronic module connecting said metal layers of said first and second single-clad sheets;
(e) a pair of external terminals brined on at least one side of said electronic module to permit electrical connection thereto by a surface mounting arrangement; and
(f) an outer layer around said first single-clad sheet, said second single-clad sheet, and said double-clad sheet.

5,703,545
HIGH FREQUENCY FILTER CIRCUIT
Gerald Düllberg, Iserlohn; Herbert Peusens, Brigachtal, and Veit Armbruster, Georgen, all of Germany, assignors to Deutsche Thomson-Brandt GmbH, Villingen-Schwenningen, Germany
Filed Mar. 11, 1996, Ser. No. 613,423
Claims priority, application Germany, Mar. 17, 1995, 195 09 644.4
Int. Cl.⁶ H01P *1/20*
U.S. Cl. 333—202 **16 Claims**

1. Filter circuit comprising:
an amplifier stage,
a bandpass filter coupled downstream of the amplifier stage, and
a filter coupled upstream of the amplifier stage and has at least one trap comprising a rejection circuit tuned to an intermediate frequency, and a series-tuned circuit tuned to an image frequency,

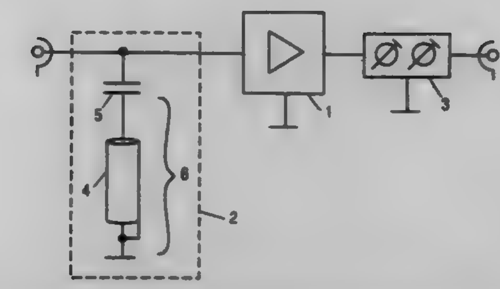

the rejection circuit and the series-tuned circuit have a common inductance.

5,703,546
STRIP LINE FILTER HAVING DUAL MODE LOOP RESONATORS
Kazuaki Takahashi, Kawasaki; Makoto Hasegawa, Tokyo; Mitsuo Makimoto, Yokohama, and Munenori Fujimura, Kawasaki, all of Japan, assignors to Matsushita Electric Industrial Co., Ltd., Osaka, Japan
Division of Ser. No. 548,841, Oct. 26, 1995, Pat. No. 5,623,238, which is a division of Ser. No. 348,169, Nov. 28, 1994, Pat. No. 5,497,131, which is a division of Ser. No. 53,535, Apr. 29, 1993, Pat. No. 5,369,383. This application Nov. 27, 1996, Ser. No. 757,791
Claims priority, application Japan, Apr. 30, 1992, 4-111127; May 11, 1992, 4-117111; Jun. 12, 1992, 4-153238; Sep. 14, 1992, 4-244374
Int. Cl.⁶ H01P *1/20*
U.S. Cl. 333—204 **16 Claims**

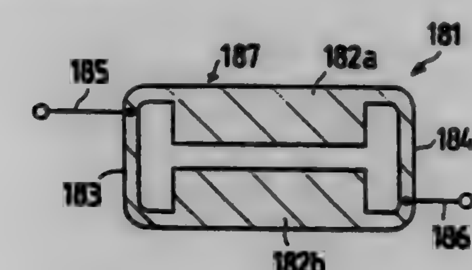

1. A strip loop resonator in which a microwave is resonated, comprising:
a rectangle-shaped strip line having an electric length shorter than a wavelength of the microwave for resonating the microwave circulated therein in two difference directions according to a line impedance thereof, the rectangle-shaped strip line comprising:
a pair of parallel coupling lines respectively having a wide width which are arranged in parallel to each other and are coupled to each other in capacitive coupling to change a characteristic impedance of the rectangle-shaped strip line,
a first side strip line through which first side ends of the parallel lines are connected, the first side strip line having a narrow width narrower than the wide width of the parallel coupling lines, and
a second side strip line through which second side ends of the parallel lines are connected, the second side strip line having another narrow width narrower than the wide width of the parallel coupling lines,
an input strip line coupled to the rectangle-shaped strip line in electromagnetic coupling, the microwave being transferred from the input strip line to the rectangle-shaped strip line; and
an output strip line coupled to the rectangle-shaped strip line in electromagnetic coupling, the microwave being transferred from the rectangle-shaped strip line to the output strip line.

5,703,547
DUAL-MODE CAVITY FOR WAVEGUIDE BANDPASS FILTER
Giorgio Bertin, Turin, and Luciano Accatino, Rosta, both of Italy, assignors to Cselt- Centro Studi E Laboratori Telecomunicazioni S.P.A., Turin, Italy
Continuation of Ser. No. 486,318, Jun. 7, 1995. This application Feb. 11, 1997, Ser. No. 798,645
Claims priority, application Italy, Jun. 8, 1994, TO94A0473
Int. Cl.⁶ H01P *1/20*
U.S. Cl. 333—209 **6 Claims**

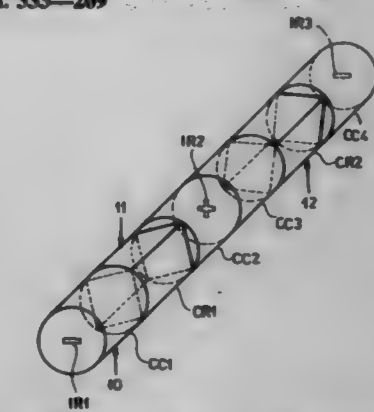

1. A dual-mode cavity for a waveguide bandpass filter, said dual-mode cavity consisting essentially of:
a first end waveguide section having a first iris lying in a polarization plane of one mode at an end of said first end waveguide section and shaped to support two modes including said one mode and a mode having a polarization plane perpendicular to said one mode, said first iris enabling coupling of said first end waveguide section to an adjoining waveguide;
an intermediate waveguide section coaxial with and aligned with said first end waveguide section at an end thereof opposite said end at which said first iris is provided, said intermediate waveguide section being of rectangular section with sides tilted at an angle β greater than 0° and less than 90° with respect to said polarization plane of said one mode and of said first iris; and
a second end waveguide section coaxial and aligned with said intermediate waveguide section and adjacent said second end waveguide section opposite said first end waveguide section, said second end waveguide section having a second iris lying in said polarization plane of said one mode and of said first iris at an end of said second end waveguide section opposite said intermediate waveguide section, said second end waveguide section being shaped to support two modes, said second iris enabling coupling of said first end waveguide section to an adjoining waveguide, said wave-guide sections forming a single adjustment-screw-free cavity between said irises.

5,703,548
DIELECTRIC RESONATOR HAVING ADJUSTMENT PLATES MOVABLE WITH RESPECT TO RESONATOR DISC AND EACH OTHER
Veli-Matti Sarkka, Oulunsalo, Finland, assignor to Nokia Telecommunications Oy, Espoo, Finland
PCT No. PCT/FI95/00545, § 371 Date Jun. 4, 1996, § 102(e) Date Jun. 4, 1996, PCT Pub. No. WO96/11509, PCT Pub. Date Apr. 18, 1996
PCT Filed Oct. 4, 1995, Ser. No. 640,794
Claims priority, application Finland, Oct. 5, 1994, 944661
Int. Cl.⁶ H01P *7/10*
U.S. Cl. 333—235 **4 Claims**

1. A dielectric resonator, comprising
a dielectric resonator disc,
an electrically conductive casing,
a plurality of dielectric adjustment plates which are installed concentrically and parallel with each other and said dielectric

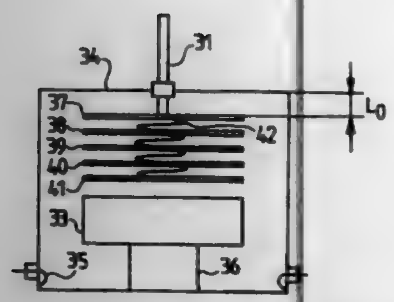

resonator disc, a mechanical engagement between said dielectric adjustment plates enabling movement of said adjustment plates in relation to each other and said dielectric resonator disc,

an adjustment mechanism for moving said dielectric adjustment plates in a direction perpendicular to the dielectric resonator disc, for adjusting the resonance frequency of the dielectric resonator, the adjustment plates being arranged to be gradually stacked on said dielectric resonator disc during an adjusting movement towards said dielectric resonator disc, and said adjustment plates being arranged to be gradually unstacked from said dielectric resonator disc during an adjusting movement away from said dielectric resonator disc.

5,703,549
RELAY WITH A MOVABLE ASSEMBLY HAVING A DAMPENING EFFECT

Guido Guidi, Frosinone; Giampaolo Boezi, Alatri, and Pietro De Filippis, Monza, all of Italy, assignors to Bitron S.P.A., Cantalupa, Italy

Filed Feb. 3, 1995, Ser. No. 383,513
Claims priority, application Italy, Feb. 4, 1994, TO94A0060
Int. Cl.[6] H01H *51/22*

U.S. Cl. 335—78 **3 Claims**

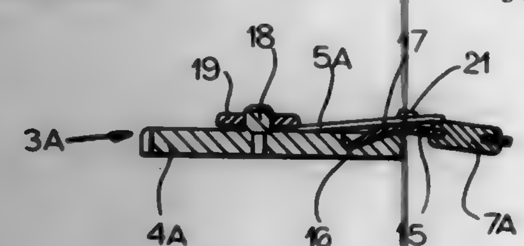

1. A relay suitable for use in a motor vehicle comprising:
a ferromagnetic core;
an excitation coil surrounding said core;
an armature assembly mounted so as to be movable relative to said core and comprising:
an armature juxtaposed with said core and attracted toward said core from a position in which said armature forms a maximum gap with said core, said armature having a recess at an end thereof,
a bent blade having one end formed as a fulcrum and engaged in said recess and an opposite end formed as a movable contact, a leaf spring having one end bearing upon said blade and overlying said blade, and means for anchoring said leaf spring at a location spaced from said end of said leaf spring to said armature,
a coil spring acting upon an opposite end of said armature for drawing said armature into said position; and
a pair of fixed contacts straddling said movable contact and selectively engaged by said movable contact upon excitation and de-excitation of said coil with pivoting of said blade about said fulcrum and damping of bounce by said movable contact with said leaf spring.

5,703,550
MAGNETIC LATCHING RELAY

Andrzej Marian Pawlak, Troy, and Chi Hung Leung, Rochester Hills, both of Mich., assignors to General Motors Corporation, Detroit, Mich.

Filed Dec. 26, 1995, Ser. No. 578,304
Int. Cl.[6] H01H *51/22*

U.S. Cl. 335—78 **5 Claims**

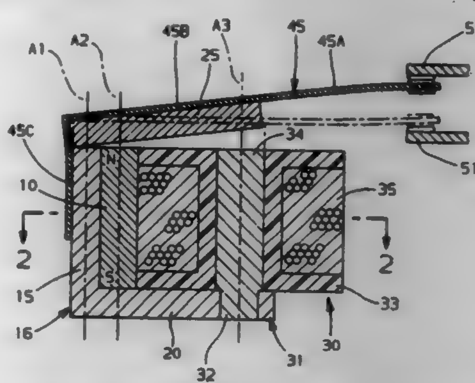

1. A magnetic latching apparatus having a permanent magnet, electro-magnet, and an armature having a spring biased first bi-stable position and a magnetically latched second bi-stable position, said coil adapted for bi-directional energization to selectively establish one of said first and second bi-stable positions of the armature, the apparatus comprising, in combination:
said permanent magnet having a first magnetization axis;
back iron immediately adjacent said permanent magnet;
said electro-magnet including a coil and a core, said electromagnet having a second magnetization axis;
wherein said permanent magnet, back iron and electro-magnet core are arranged such that the permanent magnet is substantially intermediate the back iron and electro-magnet core and the first and second magnetization axes being substantially parallel; and,
said armature extending from said back iron to said electro-magnet core and pivotally secured at a first end proximate said back iron such that a second end proximate said electro-magnet core is free to move toward and away from said electro-magnet core to establish said second and first bi-stable positions, respectively.

5,703,551
STARTER CONTACTOR HAVING AN ELECTRONIC CONTROL CIRCUIT, AND A VEHICLE STARTER HAVING SUCH A CONTACTOR

Bruno Lefebvre, Villeurbanne; René Jacquet, Lyons, and Jean-François Quentric, St. Bonnet de Mure, all of France, assignors to Valeo Equipements Electriquest Moteur, Creteil, France

Filed Jun. 25, 1996, Ser. No. 670,371
Claims priority, application France, Jun. 27, 1995, 95 07808
Int. Cl.[6] H01H *67/02*

U.S. Cl. 335—126 **12 Claims**

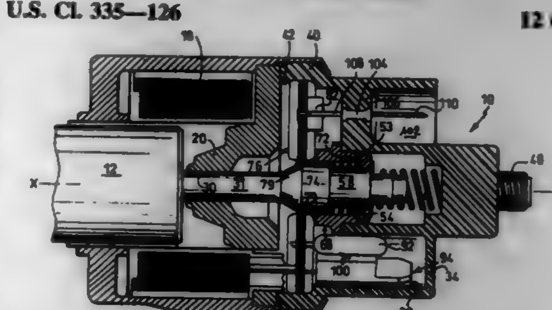

1. A contactor, for a motor vehicle starter having a starter motor and a power supply circuit for said motor, the said power supply circuit including a pair of fixed contact terminals, the contactor comprising: an annular cylindrical armature constituting a casing; a movable core mounted in the said armature for axial movement therein; a winding within the said casing for effecting said axial movement of the movable core; a disc-shaped fixed core disposed at one axial end of the said armature and having a central axial hole; a control rod extending through the said axial hole in the fixed core into contact with the said movable core, so as to be displaceable by the latter; a hood having the general form of a cylindrical pot and including a skirt portion which defines a housing internally of the hood, the hood further including a base portion joined to its said skirt portion, the said fixed contact terminals being arranged in the said base portion of the hood; a movable contact disposed within the said housing and coupled with the said control rod for displacement of the movable contact by the control rod into and out of electrical contact with the said pair of fixed contact terminals; and an electronic control circuit for the contactor, the said control circuit comprising a support member and circuit components carried by the support member, wherein the said control circuit is disposed in an axial position within the said hood.

5,703,552
ELECTRICAL SAFETY SWITCH

Jean Claude Buffet, Sospel, and Lionel Raut, Menton, both of France, assignors to Eaton Corporation, Cleveland, Ohio

Filed Dec. 5, 1995, Ser. No. 567,448
Claims priority, application France, Dec. 6, 1994, 94 14886
Int. Cl.[6] H01H *9/00*

U.S. Cl. 335—205 **8 Claims**

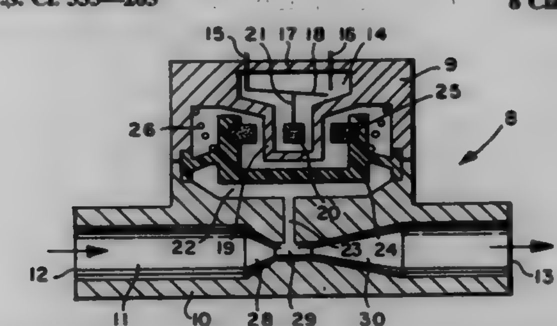

1. Electrical switch, actuated by the pressure of a liquid or gaseous fluid, characterized in that it features a body with a fluid passage; a chamber communicating (at point) with said fluid passage; a moving and/or flexible part inside the chamber, linked to an annular magnet; an electrically insulated, sealed inner wall surrounded by annular magnet, which houses and guides an axially displaced central magnet, mechanically linked at point to a mobile contact piece, such as a contact tongue, which cooperates with at least one fixed electrical terminal to close and open an electrical circuit, depending on the position of the central magnet, which is magnetically coupled with the coaxial annular magnet, the position of said annular magnet being determined by pressure of the fluid which enters the aforementioned chamber.

5,703,553
MAGNETOSTRICTIVE ACTIVE STRUT

Dariusz Antoni Bushko, Hopkinton; Kevin Michael Avakian, Tewksbury, both of Mass.; Bruce Graham Johnson, Monument, Colo., and Michael Jonathan Gerver, Brookline, Mass., assignors to SatCon Technology, Corp., Cambridge, Mass.

Filed May 24, 1996, Ser. No. 653,522
Int. Cl.[6] H01F *7/00*

U.S. Cl. 335—215 **18 Claims**

1. A magnetostrictive active member, comprising:
a housing configured to contain elements of said magnetostrictive active member;

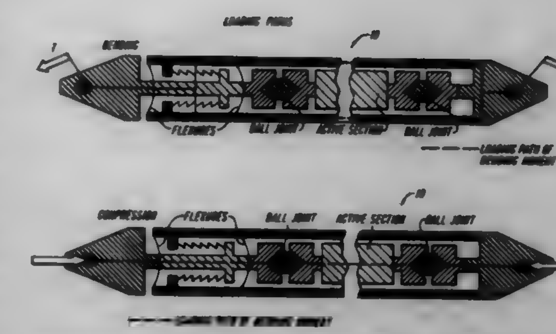

a magnetostrictive actuator member disposed within said housing and being configured for actuation in a first and second direction;
a preload mechanism at least partially disposed within said housing, applying preload to said actuator member, said preload mechanism including a portion accessible from the exterior of said housing and being adjustable to change the preload applied to said actuator member; and
a load path system substantially shielding said actuator member from at least bending moments to avoid excessive tensile stresses in said actuator member, said load path system comprising parallel flexures directing bending moments to said housing.

5,703,554
BISTABLE SWITCHING ARRANGEMENT

Tibor Polgar, Maria Enzersdor, and Rudolf Mikl, Vienna, both of Austria, assignors to EH-Schrack Components Aktiengesellschaft, Vienna, Austria

Filed Jun. 6, 1995, Ser. No. 471,789
Claims priority, application Austria, Jun. 8, 1994, A 1149/94
Int. Cl.[6] H01F *7/00;7/08*

U.S. Cl. 335—229 **8 Claims**

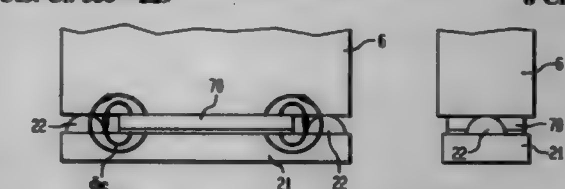

1. A bistable electric switching arrangement, comprising:
a magnetic system including
a core structure having one bar section carrying a coil and another bar section, and
a spring-biased armature swingably mounted to the one bar section of the core structure for movement between two stable switching states;
at least one permanent magnet being so positioned in at least one region other bar section as to form only part of a cross sectional area of said region; and
a pole flange, said permanent magnet being positioned between the pole flange and a pole face of the other bar section, said pole flange including bead-like projections laterally of the permanent magnet and spaced by an air gap, said projections having an apex bearing upon the pole face of the other bar section.

5,703,555
ROTARY ACTUATOR

Roy A. McCann, Kettering, Ohio, assignor to ITT Automotive Electrical Systems Inc., Auburn Hills, Mich.

Filed Apr. 25, 1995, Ser. No. 427,777
Int. Cl.[6] H01F *7/08*

U.S. Cl. 335—272 **21 Claims**

1. A rotary actuator, comprising:
a rotor that is rotatable about an axis;

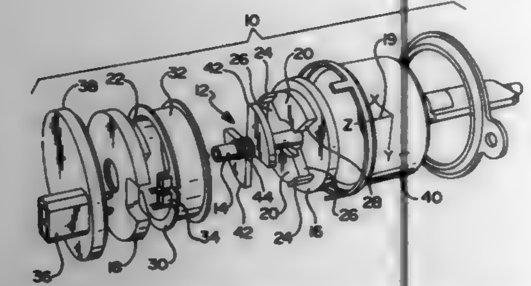

two stator poles generally aligned along said axis and disposed on opposite sides of said rotor, said poles being stationary about said axis;

a coil disposed about said rotor, said coil being energizable to thereby generate a magneto motive force that travels along a main flux path and causes said rotor to rotate about said axis; and

a pole riser extending from at least one of said stator poles and positioned to abut a portion of said rotor when said rotor rotates to a preselected stop position, said pole riser having a configuration that provides first and second flux paths in addition to said main flux path.

5,703,556
IGNITION COIL FOR AN INTERNAL COMBUSTION ENGINE

Hikaru Kikuta, Takahama City, and Toshiro Suzuki, Nissin City, both of Japan, assignors to Aisan Kogyo Kabushiki Kaisha, Obu City, Japan

Filed Dec. 18, 1996, Ser. No. 769,268

Claims priority, application Japan, Dec. 27, 1995, 7-352738

Int. Cl.[6] H01F *15/02;27/24*

U.S. Cl. 336—83 6 Claims

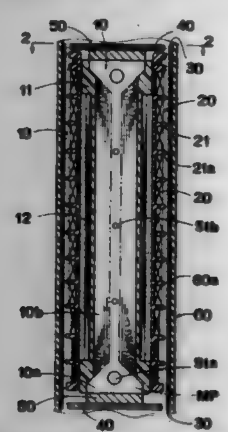

1. An ignition coil for an internal combustion engine comprising:

a magnetic columnar member having a plurality of magnetic plates stacked one on the other with stacked portions formed on at least opposite end portions of said columnar member, each of said magnetic plates being a flat plate with opposite ends thereof having a width greater than a middle portion of said flat plate, the width of the middle portion of each of said magnetic plates being gradually increased from said magnetic plates placed at opposite sides of said columnar member to said magnetic plates placed in a center of said columnar member to form the middle portion of said columnar member having a substantially circular cross section, the opposite end portions of said columnar member having a cross section greater in area than the cross section of the middle portion of said columnar member, respectively;

a primary winding and a secondary winding wound around the middle portion of said columnar member;

a magnetic cylindrical member for receiving therein said columnar member with said primary winding and said secondary winding wound around said columnar member; and

a magnetic cylindrical case for receiving therein said cylindrical member and said columnar member.

5,703,557
NOISE ABSORBING DEVICE

Takayuki Osada; Fumishiro Tsuda; Norio Saito; Takeji Ihara; Yoshio Wagatsuma, and Hitoshi Moriya, all of Miyagi, Japan, assignors to Tokin Corporation, Miyagi, Japan

Continuation of Ser. No. 392,810, Feb. 28, 1995, abandoned. This application Feb. 10, 1997, Ser. No. 797,855

Claims priority, application Japan, Jul. 8, 1993, 5-169276; Sep. 1, 1993, 5-217463; Sep. 21, 1993, 5-235235

Int. Cl.[6] H01F *17/06;27/02;27/26*

U.S. Cl. 336—92 4 Claims

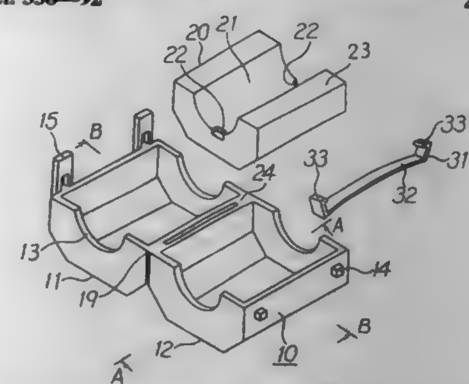

1. A noise absorbing device comprising a pair of core elements formed by dividing a cylindrical magnetic core into halves by a dividing plane including a cylindrical center axis, said core being adapted to receive therethrough an extension of a cable connected to an electronic apparatus including a pair of holder segments having openings and adapted to receive said pair of core elements in core receiving recesses thereof, said pair of holder segments being coupled by a hinge to enable abutting contact with each other and capable of being closed together with their openings in face to face relationship so that said pair of core pieces form a cylindrical core shape with said cable extending therethrough;

wherein each of said core elements have a configuration and a size including an axial core length smaller than each of said core receiving recesses, each of said core elements being provided with a pair of lip portions including lip surfaces determined by said dividing plane and with an inner surface connecting between said lip surfaces in which inner surface a pair of engaging recesses are formed at peripheries of the opposite end portions of each of the core pieces;

wherein elastic pieces are press fitted in said core receiving recesses of said pair of holder segments to hold and prevent said core pieces from falling out of said core receiving recesses and retained therein by frictional engagement with an interior wall of the holder segment and without penetrating said interior wall or any other holder segment interior wall, each of said elastic pieces being made of a deformable elastic material comprising a strip body which has at least one curved portion protruding in an opening direction towards each of said openings and which has a length not less than said axial core length, and a pair of columnar portions extending in said opening direction from both ends of said strip body, and engaging pieces extending from upper ends of said pair of columnar portions towards each other and engaging with said engaging recesses of said core piece,

whereby each of said core pieces is held in each of said holder segments with each of said lip portions protruding from each of said holder segments through each of said openings,

and whereby when said pair of holder segments are closed together, each of said core pieces is displaced from a protruding position towards the inside of said receiving recess and is forced by reaction of said elastically deformable strip body, which is deformed by the displacement, so that said pair of lip portions of one of said core pieces is brought into abutting contact with said other pair of lip portions of said core pieces to form said cylindrical core shape.

5,703,558
COMBINED TERMINAL BLOCK MOUNT AND LAMINATION STACK KEEPER

Daniel P. Wood, Laurel Hill, N.C., assignor to Acme Electric Corporation, East Aurora, N.Y.

Filed Mar. 10, 1995, Ser. No. 401,939

Int. Cl.[6] H01F *27/29;27/30;27/26*

U.S. Cl. 336—192 20 Claims

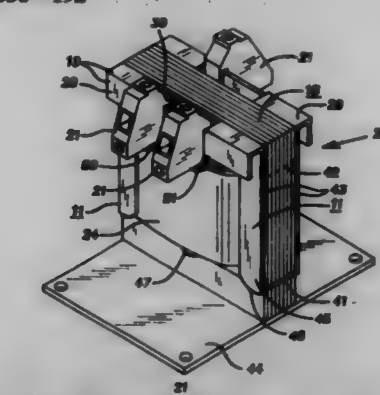

1. A combined terminal block mount and lamination stack keeper, comprising, in combination:

a metal keeper having a flat first portion of a size and shape to lie contiguous to and oriented with a stack of laminations;

means for securing said keeper first portion to said lamination stack to aid in securing together the laminations in the stack;

a part of said keeper first portion being adapted to be adjacent an inductance coil on part of a lamination stack;

a bend in said keeper to establish a unitary mounting strip out of a plane defined by the keeper first portion;

an aperture in said keeper adjacent the mounting strip to receive a cantilever leg of one or more terminal blocks; and

said mounting strip having a width and thickness to mount a terminal block thereon.

5,703,559
PLATE PACKET FOR MAGNET CORES FOR USE IN INDUCTIVE COMPONENTS HAVING A LONGITUDINAL OPENING

Kurt Emmerich, Alzenau, and Herbert Hein, Freigericht, both of Germany, assignors to Vacuumschmelze GmbH, Hanau, Germany

Filed Sep. 9, 1996, Ser. No. 711,094

Claims priority, application Germany, Sep. 9, 1995, 295 14 508.0

Int. Cl.[6] H01F *27/28;27/24*

U.S. Cl. 336—234 11 Claims

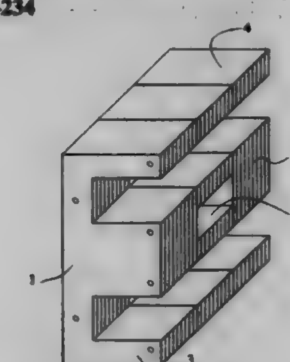

1. A plate packet for a magnetic core for charging a magnetic circuit with an alternating field, comprising:

a plurality of plate lamellae disposed in a stacked assembly respectively in a plurality of parallel, adjacent plate planes;

said plurality of plate lamellae including first and second sets of outer plate lamellae each having the same cross-section in said plate planes; and

at least two sets of inner plate lamellae disposed between said first and second sets of outer plate lamellae, said at least two sets of inner plate lamellae being spaced from each other and forming an opening in said plate planes between said first and second sets of outer lamellae, said at least two sets of inner plate lamellae, in combination, having a cross-section which, except for said opening, is the same as the cross-section of said first and second sets of outer lamellae.

5,703,560
THERMOSTAT WITH ONE-PIECE RESET MECHANISM AND CONTACT ASSEMBLY

Stephen P. Short, Johnston, R.I., and Philip R. Lichtman, Newton, Mass., assignors to Elmwood Sensors, Inc., Pawtucket, R.I.

Filed Sep. 11, 1995, Ser. No. 526,786

Int. Cl.[6] H01H *37/70;37/04*

U.S. Cl. 337—348 7 Claims

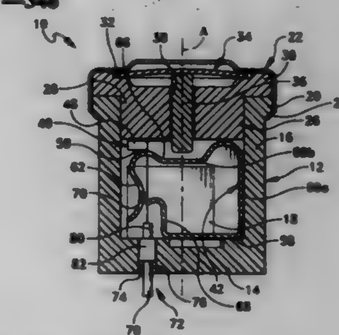

1. A thermostatic switch comprising:

a housing having a cavity formed therein;

a temperature responsive bimetallic disc located in said housing and being responsive to a predetermined temperature for exerting a flexing action;

a fixed contact member located in said cavity and being electrically interconnected to a first terminal external to said housing;

a movable contact member located in said cavity adjacent said fixed contact member, said movable contact member being electrically interconnected to a second terminal external to said housing, and being biased and movable between a switch-closed position in which it makes electrical contact with said fixed contact member and a switch-open position in which it is spaced from said fixed contact member, said movable contact member having an arm portion with an opening formed therein;

an actuating member located in said housing and being responsive to flexing movement of said disc for moving said movable contact member from said switch-closed position to said switch-open position; and

locking means for automatically engaging and locking said movable contact member in the switch-open position, said locking means comprising a hook portion mounted within the cavity of the housing, said hook portion engaging said arm portion of the movable contact member upon the movement of the movable contact member to its switch-open position and entering said opening of the arm portion for retaining and maintaining the movable contact member in its switch open position, said hook portion being integrally formed as one-piece with said movable contact member, the arrangement being such that the movable contact member is free to return to the normal switch-closed position by the spring action thereof when both the hook portion is released from the arm portion of the movable contact member and said actuating member is in the switch-closed position.

5,703,561
RESISTOR DEVICE
Shuko Yamamoto, Sano; Takeya Osakada, Kasukabe, and Iwao Tsugi, Kodaira, all of Japan, assignors to Calsonic Kohwa Co., Ltd., Tokyo, Japan
Filed Aug. 6, 1996, Ser. No. 693,006
Claims priority, application Japan, Dec. 27, 1995, 7-341680; Feb. 28, 1996, 8-041748
Int. Cl.⁶ H01C *1/08*
U.S. Cl. 338—53 **1 Claim**

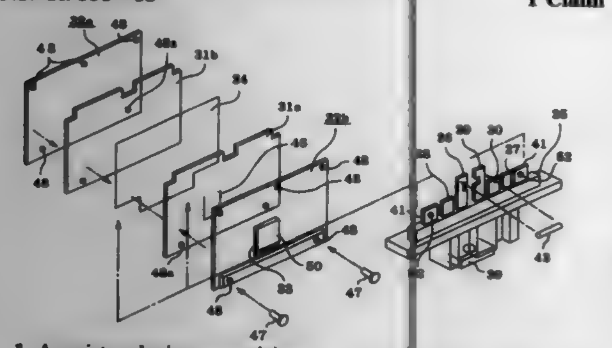

1. A resistor device comprising:
a resistor body having at least first, second and third ends with a first resistance value provided between the first and second ends and with a second resistance value different from the first resistance value provided between the first and third ends,
a base of insulation material,
a conductor member having a base half portion embedded in the base and a tip half portion exposed from the base and connected to the first end,
a first terminal having a central portion embedded in the base and an inner end portion connected to the second end,
a second terminal having a central portion embedded in the base and an inner end portion connected to the third end,
a third terminal provided adjacent and away from the conductor member and having an central portion embedded in the base,
a fuse provided between the third terminal and the conductor member,
a pair of insulation sheets for holding the fuse, the resistor body, the inner end portions of the first to third terminals and the tip half portion of the conductor member therebetween, and
a pair of cover plates made of a metal with a good thermal conductivity to hold the insulation sheets therebetween, such that air flows outside the cover plates and that one of the cover plates has an inlet opening formed at a portion corresponding to the fuse to introduce part of the air to inside the cover plates.

5,703,562
METHOD FOR TRANSFERRING DATA FROM AN UNSECURED COMPUTER TO A SECURED COMPUTER
Curt A. Nilsen, Castro Valley, Calif., assignor to Sandia Corporation, Albuquerque, N. Mex.
Filed Nov. 20, 1996, Ser. No. 753,130
Int. Cl.⁶ G08B *9/00*
U.S. Cl. 340—286.02 **15 Claims**

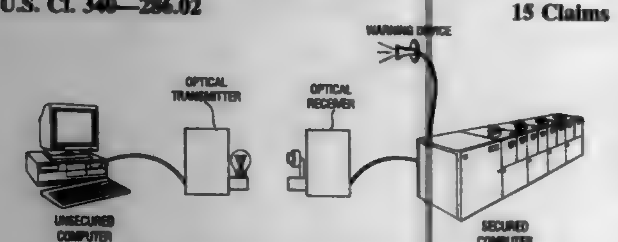

1. A method for transferring data from an unsecured computer to a secured computer, the method comprising:
(a) transmitting the data;
(b) receiving the data;
(c) retransmitting the data;
(d) rereceiving the data;
(e) determining if an error was introduced when the data was transmitted by the unsecured computer or received by the secured computer;
(f) determining if an error was introduced when the data was retransmitted by the unsecured computer or rereceived by the secured computer; and
(g) emitting an warning signal from a warning device coupled to the secured computer if:
(i) an error was introduced when the data was transmitted or received, and
(ii) an error was introduced when the data was retransmitted or rereceived.

5,703,563
ANTI-HIJACK SYSTEM
Dennis F. Abe, Jr., Hamburg, N.Y., assignor to William T. Eby, College Park, Md.
Filed Feb. 9, 1996, Ser. No. 598,939
Int. Cl.⁶ B60R *25/10*
U.S. Cl. 340—426 **7 Claims**

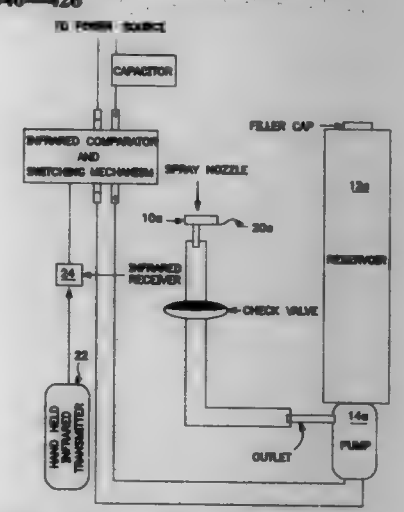

1. An anti-hijack system, comprising:
a. a nozzle arranged to be normally hidden from view mounted on the front section of a vehicle in the window well of the front windshield in such manner that the spray therefrom will impinge upon a person outside the vehicle and in the vicinity of the driver's door, said nozzle including an adjustable diverter positioned to provide both cone and flat patterns of spray according to the adjustment thereof;
b. a reservoir of incapacitating fluid adapted for mounting on a vehicle and hidden from view;
c. a pump between said nozzle and pump for forcing fluid from said reservoir through said nozzle under pressure to spray said fluid outwardly of said nozzle; and
d. a hot cap type capacitor to provide voltage regulation so that 12 volts is always available for energizing the pump.

5,703,564
MOBILE ADVERTISING DEVICE WITH ELECTRONIC TRANSMISSION CAPABILITIES
Paul G. Begum, and Gordon W. Young, both of Salt Lake City, Utah, assignors to Klever-Kart, Inc., Salt Lake City, Utah
Filed Nov. 21, 1995, Ser. No. 561,432
Int. Cl.⁶ G08B *1/08;* **G09F** *19/00*
U.S. Cl. 340—539 **13 Claims**

1. A mobile advertising device comprising:
a display unit having an inner housing with a drive motor in the inner housing, the drive motor having a power supply and an

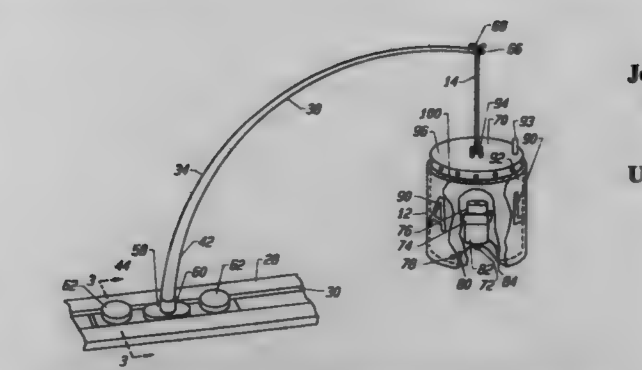

electronic controller means for operating said drive motor; an outer cylindrical graphic display structure encompassing the inner housing, wherein the display structure has a display surface substantially covering the inner housing, and wherein the drive motor has a drive shaft with means connecting the drive shaft to the outer display structure for rotating the outer display structure around the inner housing; and, suspension means connected to the inner housing for suspending the display unit from the support structure.

5,703,565
TRANSFORMER COUPLED SWITCHING TRANSMITTER FOR ELECTRONIC ARTICLE SURVEILLANCE SYSTEM
Richard L. Herring, Coconut Creek, Fla., assignor to Sensormatic Electronics Corporation, Boca Raton, Fla.
Filed Feb. 23, 1996, Ser. No. 605,980
Int. Cl.⁶ G08B *13/14*
U.S. Cl. 340—572 **18 Claims**

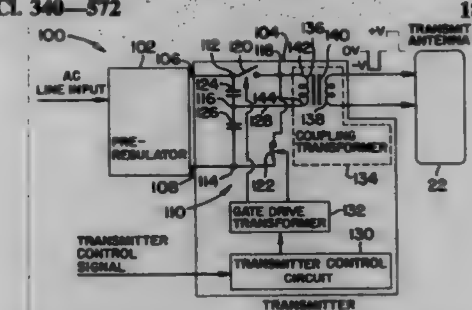

1. A transmitter circuit for driving an EAS system transmit antenna at a predetermined frequency, comprising:
signal generating means for generating a signal that alternates at said predetermined frequency; and
an isolation transformer for coupling to said antenna said signal generated by said signal generating means;
said signal generating means including:
DC power supply means for converting an AC input power signal into a DC power supply potential;
means for deriving a positive DC level and negative DC level from said DC power supply potential; and
means for alternately applying said positive DC level and said negative DC level to a primary winding of said transformer in accordance with a predetermined cycle to form said signal that alternates at said predetermined frequency.

5,703,566
ANTI-SHOPLIFTING SECURITY SYSTEM
Jon Neal Weaver, 1511 NW. 35th Terrace, Gainesville, Fla. 32605
Filed Aug. 16, 1996, Ser. No. 699,880
Int. Cl.⁶ G08B *13/14*
U.S. Cl. 340—572 **23 Claims**

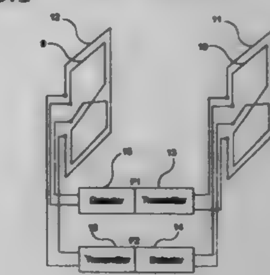

1. A system for detecting the presence of a ferromagnetic marker in an interrogation zone, comprising:
a first generating means for generating a first magnetic field in the interrogation zone at a first frequency;
a second generating means for generating a second magnetic field in the interrogation zone at a second frequency;
a detecting means for detecting a phase shift of a signal produced by a ferromagnetic marker present within the interrogation zone;
wherein said second frequency is about 3 to about 50 hertz lower or higher than said first frequency.

5,703,567
TOILET SEAT ALARM
Michael Allen Cleveland, 2479 Deer Run #414, Lewisville, Tex. 75067
Filed Sep. 23, 1996, Ser. No. 717,883
Int. Cl.⁶ G08B *23/00*
U.S. Cl. 340—573 **5 Claims**

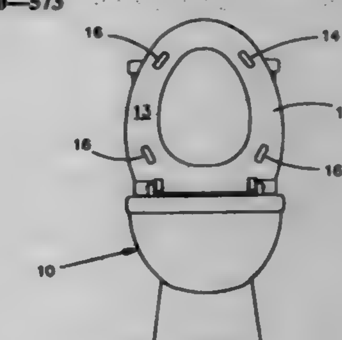

1. A toilet seat alarm, for detecting and signaling when a toilet seat is left in a raised position, comprising:
a housing unit having opposite ends and a peg located at each of said ends, said pegs inserted into predefined holes located upon an underside surface of a toilet seat to secure the toilet seat alarm thereto;
a power source, contained within said housing unit;
a speaker in circuit with said power source;
a timing device-alarm, in circuit with the power source, speaker, and a position sensor, which, upon actuation by the position sensor in response to the toilet seat being left in the open

position, causes the speaker to emit an audible signal for a predetermined period; and

a position sensor contained within said housing unit and in circuit with said power source and speaker, for detecting when the toilet seat is left in the raised position, comprising outer leads and a center lead, and a hinged tube connected to each of said leads by a connector, said leads located along the circuit between the power source and the timing device-alarm and speaker, with a weighted pendulum attached to the center lead and a corresponding hinged tube and a wire traveling from the power source to one of the outer leads and then from the opposite outer lead to the timing device-alarm and speaker such that when the toilet seat is placed in the raised position, gravity causes the pendulum to shift thereby causing the center lead attached thereto to shift into line with the outer leads and complete the circuit between the power supply and the timing device-alarm, thus activating said timing device-alarm and causing the speaker to emit an audible signal for a predetermined period, alerting someone that the toilet seat is open.

5,703,568

MULTI FUNCTION LIGHT SENSOR FOR VEHICLE

Dennis J. Hegyi, 1708 Morton, Ann Arbor, Mich. 48104

Continuation of Ser. No. 59,597, May 7, 1993, abandoned. This application Feb. 8, 1996, Ser. No. 599,272

Int. Cl.[6] G08B *21/00*

U.S. Cl. 340—602 **22 Claims**

FIG. 1

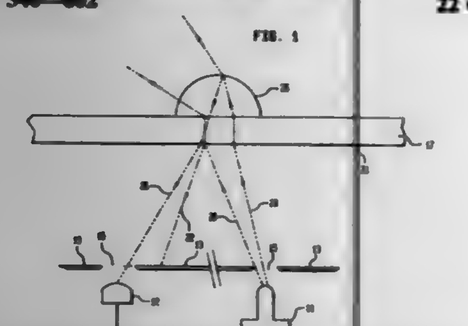

1. An arrangement for detecting the presence of water droplets on a windshield of a vehicle, the windshield being illuminated by ambient light in a field of ambient illumination, the arrangement comprising:

light source means having active and inactive states for producing a radiant energy during the active state and directing same toward the windshield, a first portion of the radiant energy being reflected by the windshield to a first illumination field, and a second portion of the radiant energy being scattered by the water droplets on the outside and inside of the windshield, and thereby reflected to a second illumination field;

light sensor means having an input for receiving an ambient light and a portion of the radiant energy produced by said light source means, said light sensor means further having a sensor output for producing a sensor output electrical signal responsive to light received at the input;

a baffle for defining a predetermined field of view of said light sensor means, the predetermined field of view being substantially exclusive of the first illumination field and inclusive of at least a portion of the second illumination field, whereby the sensor output electrical signal is substantially responsive to the ambient light and the second portion of the radiant energy produced by said light source means;

circuit means coupled to said sensor output for producing a first electrical signal responsive to the received portion of the second portion of the radiant energy from said light source means, and a second electrical signal substantially responsive to the ambient light received by said light sensor means, the first electrical signal being substantially responsive to a difference between the sensor output electrical signal produced by said light sensor means during the active state of said light source means and the sensor output electrical signal produced by said light sensor means during the inactive state of said light source means; and

processor means having a first input for receiving the first electrical signal and a first output for producing a control signal having a characteristic responsive to water droplets on the windshield.

5,703,569

RETROFIT HYDRAULIC FLUID LEAK DETECTION SYSTEM

Joseph J. Oliver, Lincoln, Nebr.; Christopher L. Young, Northwood Drive, N. Dak., and Richard D. Bednar, Lake Mills, Wis., assignors to Ransomes America Corporation, Lincoln, Nebr.

Continuation-in-part of Ser. No. 328,929, Oct. 25, 1994, Pat. No. 5,548,278, which is a continuation-in-part of Ser. No. 191,518, Feb. 3, 1984, Pat. No. 5,402,110. This application Jun. 7, 1995, Ser. No. 481,910

Int. Cl.[6] G08B *21/00*

U.S. Cl. 340—605 **86 Claims**

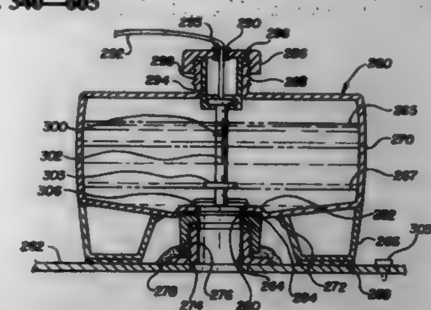

1. A hydraulic fluid leak detection system for a self-propelled vehicle or self-propelled machine including a hydraulic system having a hydraulically actuated device and a reservoir of hydraulic fluid, the leak detection system comprising:

an expansion tank in fluid communication with the reservoir;

a first sensor disposed within the expansion tank and operable for sensing the hydraulic fluid level in the expansion tank over a range of possible fluid levels in the expansion tank and for producing a first signal varying in accordance with the hydraulic fluid level;

a second sensor operable for sensing the temperature level of the hydraulic fluid in the reservoir and for producing a second electronic signal corresponding thereto;

electronic processing means for receiving the first and second signals and for determining from the first and second signals if a leak exists in the hydraulic system; and

means for indicating to an operator that a leak exists in the hydraulic system.

5,703,570

METHOD AND APPARATUS FOR INDICATING UNDELIVERED MESSAGES IN A COMMUNICATION DEVICE

Paul Edward Gorday; Xuan-Khanh Tran Gorday, both of West Palm Beach, and Sunil Satyamurti, Delray Beach, all of Fla., assignors to Motorola, Inc., Schaumburg, Ill.

Filed Aug. 16, 1995, Ser. No. 515,845

Int. Cl.[6] G08B *5/22*

U.S. Cl. 340—825.44 **17 Claims**

1. A method used in a radio communication system for delivering a message from a system controller to selective call device, the method comprising:

in the system controller the steps of

generating a first message intended for the selective call device;

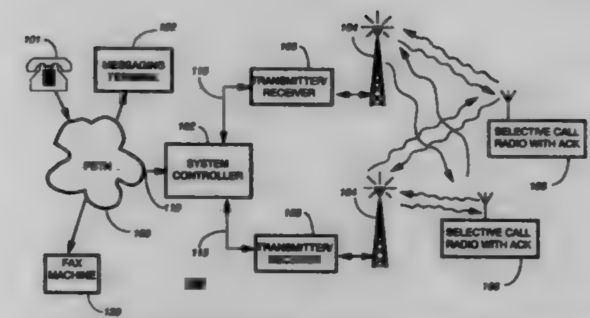

changing a delivery state of the first message to undelivered after the first message has been transmitted at least once from the system controller; and

storing the first message in the system controller when the delivery state is changed to undelivered; and

in the selective call device the steps of

determining that the first message is stored in the system controller; and

presenting user information which indicates that an undeliverable message is being stored by the system controller in response to determining that the first message is stored in the system controller, wherein the method further comprises:

in the system controller the steps of:

generating a second message intended for the selective call device which has a substantially higher probability of successful reception at the selective call device than the first message and which indicates that the first message is being stored, when the delivery state of the first message is changed to undelivered; and

transmitting the second message, and

wherein in the selective call device said step of determining is performed when the second message is received from the system controller.

5,703,571

SELECTIVE CALL TRANSCEIVER WITH CUSTOMIZED CANNED MESSAGES

Nancy Mondrosch Cannon; Gregory Lewis Cannon, both of Keller, and David Patrick Kilp, Colleyville, all of Tex., assignors to Motorola, Inc., Schaumburg, Ill.

Filed Feb. 5, 1996, Ser. No. 596,845

Int. Cl.[6] G08B *5/22*

U.S. Cl. 340—825.44 **12 Claims**

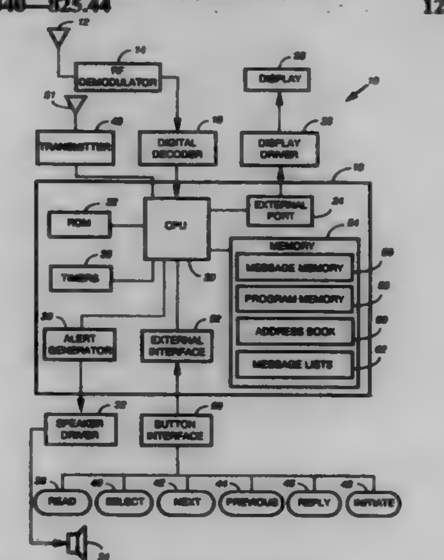

1. A selective call transceiver, comprising:

a memory storing a list of addressees and storing, for each of selected addressees, an associated group of customized messages;

a display for showing messages;

a transmitter for sending messages;

means including a processor for receiving and decoding incoming messages, the processor being coupled to the transmitter, to the display and to the memory, and being programmed to cause the display to show at least some of the customized messages in the group associated with one of the selected addressees; and

a user control coupled to the processor for choosing one of the customized messages shown by the display, the processor being responsive to the user control for causing the transmitter to transmit the chosen message to the one selected addressee.

5,703,572

INFORMING DEVICE FOR A RADIO RECEIVER

Yukio Miyashita, Tokyo, and Toshiro Nishiyama, Shizuoka, both of Japan, assignors to NEC Corporation, Tokyo, Japan

Continuation of Ser. No. 274,434, Jul. 13, 1994, abandoned. This application Dec. 5, 1996, Ser. No. 761,012

Claims priority, application Japan, Jul. 14, 1993, 5-173524

Int. Cl.[6] G08B *5/22*

U.S. Cl. 340—825.44 **13 Claims**

1. A call informing device for a radio receiver comprising:

an informing circuit for performing an informing operation for informing a user of a call when an address included in a received radio signal corresponds to a pre-assigned call number of said radio receiver comprising said call informing device;

a call reminder circuit for resuming said informing operation after a first period of time has elapsed from a halt in said informing operation and repeating said informing operation at a predetermined interval; and

a controller for increasing said predetermined interval in accordance with a number of times an informing operation is performed.

5,703,573

TRANSMITTER-RECEIVER FOR NON-CONTACT IC CARD SYSTEM

Masahiro Fujimoto, and Katsuhisa Orihara, both of Kanuma, Japan, assignors to Sony Chemicals Corp., Tokyo, Japan

Filed Jan. 11, 1996, Ser. No. 584,284

Claims priority, application Japan, Jan. 11, 1995, 7-019827

Int. Cl.[6] H04Q *0/00*

U.S. Cl. 340—825.54 **2 Claims**

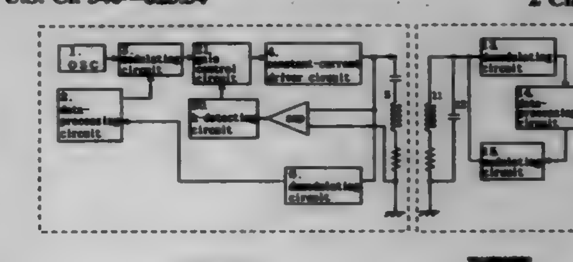

1. A transmitter-receiver used for an interrogator in a non-contact IC card system which transmits and receives signals between the interrogator and a transponder; said transmitter-receiver comprising;

a distance detecting means for detecting the distance between the interrogator and the transponder; and

an output control means for controlling the output level of the interrogator in accordance with the signals detected by the distance detecting means, so as to keep the receiving level of the transponder within the range of a given value.

5,703,574

METHOD AND DEVICE FOR TRANSFERRING A MEASUREMENT SIGNAL FROM A REVOLVING ROLL USED IN A PAPER MAKING MACHINE

Harri Allonen, Jyväskylä , Finland, assignor to Valmet Corporation, Helsinki, Finland

Filed Mar. 14, 1994, Ser. No. 213,105

Claims priority, application Finland, Mar. 17, 1993, 931192

Int. Cl.⁶ G01S *13/75*

U.S. Cl. 340—870.07 **20 Claims**

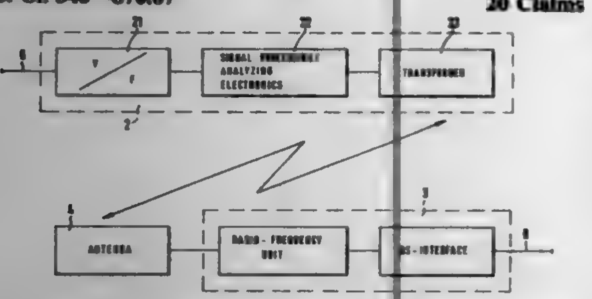

1. In a method for transferring measurement signals generated by detectors arranged on a revolving roll of a paper making machine to a first measurement signal reading unit and wirelessly transmitting said signals from said first measurement signal reading unit to a second reading unit situated exterior to the roll and associated with a control unit, the improvement comprising the steps of:

coupling a transponder to said first measurement signal reading unit,

coupling said transponder to each of said detectors such that said transponder directs one of said detectors to generate a measurement signal upon receipt of a unique code assigned to said one of said detectors,

reading analog measurement signals generated by said detectors by means of said first measurement signal reading unit, and

transmitting said analog measurement signals from said first measurement signal reading unit at a frequency in the range of between about 100 kHz and about 150 kHz to said second reading unit.

5,703,575

OPEN SENSOR DIAGNOSTIC SYSTEM FOR TEMPERATURE TRANSMITTER IN A PROCESS CONTROL SYSTEM

William R. Kirkpatrick, Faribault, Minn., assignor to Rosemount Inc., Eden Prairie, Minn.

Continuation of Ser. No. 465,684, Jun. 6, 1995, abandoned. This application Sep. 26, 1996, Ser. No. 720,214

Int. Cl.⁶ G08C *19/12*

U.S. Cl. 340—870.17 **21 Claims**

1. A temperature transmitter in a process control system, comprising:

a temperature sensor sensing a temperature and providing a sensor output related to a sensed temperature;

an A/D converter coupled to the sensor output providing a digitized output related to the sensor output;

a microprocessor coupled to the digitized output which compensates and processes the digitized output and provides a temperature output; and

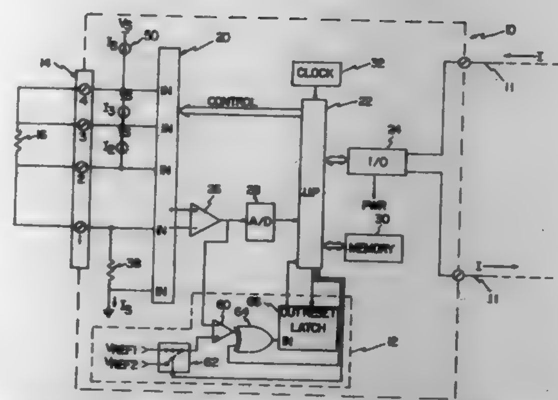

comparison circuitry which compares the sensor output to a first threshold and provides an inhibit signal to the microprocessor if the sensor output is outside of the first threshold.

13. A method of measuring temperature of a process in a process control system, comprising the steps of:

obtaining a sensor input related to temperature of the process;

providing a digitized output related to the sensor output;

compensating the digitized output and providing a compensated output indicative of temperature of the process;

comparing the first sensor input with a threshold; and

providing an error signal based upon the comparison.

5,703,576

EMBEDDABLE DC POWER SUPPLY FOR SMART STRUCTURE SENSORS

William B. Spillman, Jr., Charlotte, and Scott R. Durkee, New Haven, both of Vt., assignors to Simmonds Precision Products Inc., Richfield, Ohio

Continuation of Ser. No. 100,116, Jul. 30, 1993, Pat. No. 5,515,041, which is a continuation-in-part of Ser. No. 76,322, Jun. 14, 1993, Pat. No. 5,581,248, and a continuation-in-part of Ser. No. 76,514, Jun. 15, 1993, abandoned, and a continuation-in-part of Ser. No. 76,512, Jun. 14, 1993, Pat. No. 5,433,115. This application May 6, 1996, Ser. No. 646,705

Int. Cl.⁶ G08C *19/06*

U.S. Cl. 340—870.31 **18 Claims**

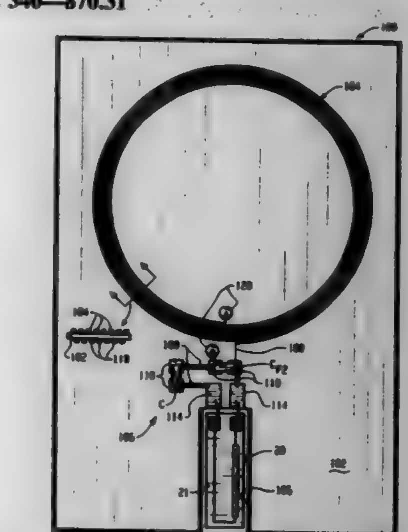

1. A smart structure comprising a sensor integrated with the structure, a DC power supply integrated with the structure for providing energy to the sensor, an external exciter circuit, and a resonant detector circuit integrated with the structure for detecting a sensor output and transmitting a corresponding signal to said exciter circuit; said power supply being disposed on a substrate embedded in the structure; said power supply having an inductive coil and ac to dc converter components disposed on the substrate;

said inductive coil being disposed in a high frequency magnetic field produced by said exciter circuit.

8. A DC power supply for a sensor embedded in a composite smart structure comprising: a substrate embeddable in the structure, a circuit pattern disposed on said substrate for interconnecting a plurality of components, said components comprising an inductive coil and an ac to dc converter, said coil being disposed on said substrate, said circuit pattern including terminals for disposing said components on said substrate and connection to the sensor, said coil being disposed in a high frequency magnetic field.

5,703,577

SELF-ERECTING TRAFFIC CONTROL DEVICE

James R. Carter, 9001 Lakeridge Dr., Louisville, Ky. 40272

Filed Feb. 1, 1996, Ser. No. 595,268

Int. Cl.⁶ G08G *1/095*

U.S. Cl. 340—908 **7 Claims**

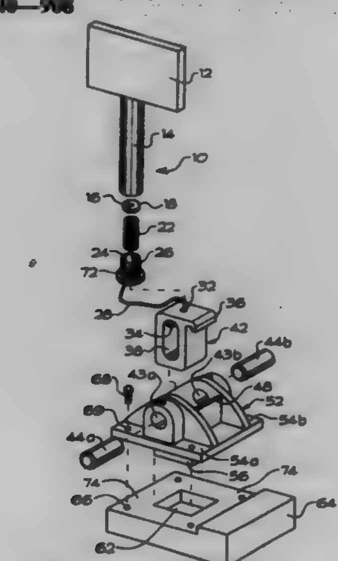

1. A self-erecting traffic control device sign comprising:

a weighted base member;

a bracket mounted onto said base member, said bracket having a center of gravity off-center of the base member;

a movable sign support member pivotally attached to said bracket whereby when said member is moved from a horizontal support surface said base member and said bracket pivot to a vertical position; and,

a vertically extending sign including yielding means attached to said movable sign support member whereby said sign yields upon impact and self-erects to its original vertical position when said impact is complete.

5,703,578

FOLDING KEYBOARD

Jeffery Daniel Allison, Seattle, Wash., assignor to International Business Machines Corporation, Armonk, N.Y.

Filed Jan. 16, 1997, Ser. No. 785,725

Int. Cl.⁶ H03K *17/94*

U.S. Cl. 341—22 **21 Claims**

1. A keyboard comprising:

a first keyboard section bearing a subset of keys of the keyboard;

a second keyboard section bearing a subset of keys of the keyboard;

said keyboard sections mechanically coupled to allow pivotal movement about each other along a pivot axis between a closed position in which said keyboard sections are folded over to be substantially adjacent to and substantially parallel with each other, and an open position in which said keyboard sections are substantially coplanar with and substantially abut each other; and

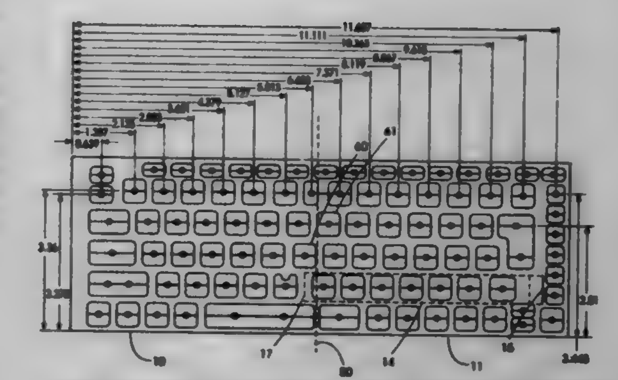

a slider mounted to said first keyboard section and bearing a subset of said keys of said keyboard section, said slider movable between a first position withdrawn into said keyboard section behind said pivot axis so as to facilitate folding of said keyboard into said closed position, and a second position, corresponding with said open position of said keyboard, extended beyond said pivot axis to nest with a corresponding notch in said second keyboard section, whereby said subset of keys of said slider are in a configuration for use when in said nested position.

5,703,579

DECODER FOR COMPRESSED DIGITAL SIGNALS

Tsutomu Nonaka; Toshiyuki Nase; Hirofumi Sato; Toshihiko Nishimura, and Naohisa Suzuki, all of Tokyo, Japan, assignors to Nippon Steel Corporation, Tokyo, Japan

Filed Apr. 26, 1996, Ser. No. 638,230

Claims priority, application Japan, May 2, 1995, 7-132907; May 23, 1995, 7-148299; Jun. 13, 1995, 7-170341; Jun. 20, 1995, 7-176629

Int. Cl.⁶ H03M *7/00*

U.S. Cl. 341—50 **35 Claims**

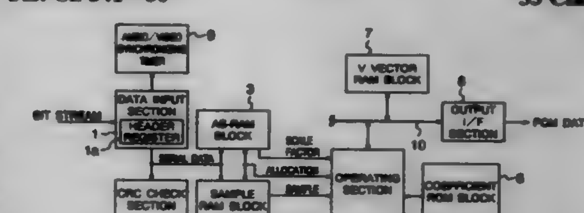

1. A decoder for decoding compression data attained by conducting a compression encoding operation for digital data through a high efficiency encoding in which the data compression is conducted such that one sample is subdivided according to a frequency of a signal represented by the digital data into a set of subband samples representing frequency components of a plurality of subbands and there are extracted from each of the subband samples first information data having a variable bit length and indicating a level of the subband sample logarithmically compressed, second information data representing a factor of the logarithmic compression, third information data denoting the number of the second information items associated with a predetermined data length, and fourth information data representing at least a bit length of the first information data, said decoder comprising:

first storage means for provisionally storing therein at least the second information data and the fourth information data;

first write means for writing at least the second information data and the fourth information data in a predetermined storage area of the first storage means according to the third information data;

first read means for reading at least the second information data and the fourth information data from the predetermined storage area of the first storage means;

second storage means for temporarily storing therein the first information data;

second write means for writing the first information data in the second storage means according to the fourth information data;
second read means for reading the first information data from the second storage means;
operating means for conducting an inverse quantization process obtaining a bit length of each sample data from the first information data according to the fourth information data, executing an inverse scaling process attaining subband sample data indicating a level of the subband sample from each sample data through an exponent operation specified by the second information data, carrying out a complex subband filtering process combining the subband sample data related to the set of subband samples into a sequence of numeric values associated with the original digital data, and thereby obtaining the original digital data from the sequence of numeric values;
said operating means further producing an operation formula by subdividing an exponent of the exponent operation into an integer part and a fraction part and conducting through a multiplication an operation related to the fraction part according to the operation formula, conducting through a shift operation an operation related to the integer part, thereby attaining the subband sample data;
said operating means calculating the sequence of numeric values on the basis of the subband sample data associated with the set of subband samples;
third storage means for temporarily storing therein the sequence of numeric values calculated by the operating means;
third write means for writing the sequence of numeric values in a predetermined area of the third storage means;
third read means for reading the sequence of numeric values from the third storage means; and
output means for outputting therefrom digital data obtained by the operation means; and wherein
said first write means temporarily writes, after storing the third information data in the predetermined storage area of the first storage means, the second information data inputted after the third information in the storage area in which the third information is previously stored.

5,703,580

APPARATUS FOR ENCODING AND DECODING RUN LENGTH LIMITED CODE DATA

Jung-wan Ko, Suwon, Rep. of Korea, assignor to Samsung Elecrtronics Co., Ltd., Kyungki-Do, Rep. of Korea

Filed Jul. 15, 1996, Ser. No. 678,601

Claims priority, application Rep. of Korea, Aug. 9, 1995, 95-24534

Int. Cl.⁶ H03M *7/00*

U.S. Cl. 341—59 **27 Claims**

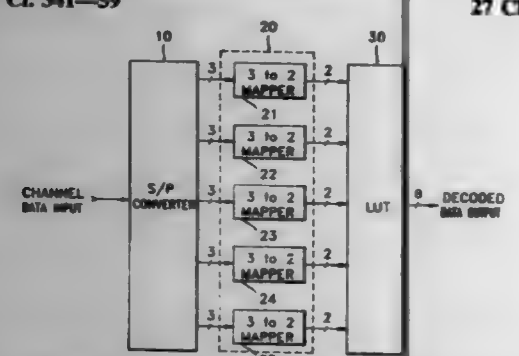

1. A decoding apparatus for run length limited (RLL) code data satisfying a (d,k,m,n) condition, in which d is a minimum run length, k is a maximum run length, m is the number of bits of input code data, and n is the bit number of bits of transmission code data, said decoding apparatus comprising:
pre-decoding means for decoding input parallel n-bit transmission code data to r-bit code data in which r is not less than m and less than n, wherein r is set according to said minimum run length condition d; and
decoding means for decoding said r-bit code data to m-bit code data.

5,703,581

METHOD AND APPARATUS FOR DATA COMPRESSION AND DECOMPRESSION

Yossi Matias, Potomac, and Suleyman Cenk Sahinalp, Greenbelt, both of Md., assignors to Lucent Technologies Inc., Murray Hill, N.J.

Filed Jun. 14, 1996, Ser. No. 665,188

Int. Cl.⁶ H03M *7/40*

U.S. Cl. 341—67 **21 Claims**

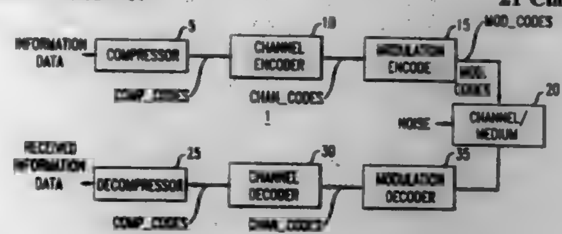

1. A method for processing a stream of data symbols into a variable-length compressed code stream comprising:
first parsing said symbol stream and storing in a table strings of symbols encountered in said stream, said stored strings having respective codes associated therewith, each string of symbols containing more than one symbol including a prefix string of symbols and an extension symbol, said prefix string corresponding to a string stored in said table;
second parsing said symbol stream, said second parsing successively partitioning said symbol stream for identifying codes in the table associated with table strings that correspond to the successive partitioning;
said second parsing step determining said successive partitioning by determining the symbol sequence length of a current symbol sequence in the stream when sequences of at least two different lengths correspond to entries in the table for said current sequence based on determining last encountered symbol positions of corresponding next sequences in the stream that correspond to strings in the table and which start at next symbol positions in the stream after said sequences of at least two different lengths; and
providing the identified codes in said second parsing step for said compressed code stream.

5,703,582

DAC WITH FEEDBACK CONTROL FOR CURRENT SOURCE BIAS DURING NON-DISPLAY PERIOD

Seiji Koyama, Yamato; Tohru Nozawa, Sagamihara; Asao Terukina, Yamato, and Yasusuke Suzuki, Kanagawa-ken, all of Japan, assignors to International Business Machines Corporation, Armonk, N.Y.

Filed Apr. 1, 1996, Ser. No. 627,663

Claims priority, application Japan, Mar. 31, 1995, 7-075084

Int. Cl.⁶ H03M *1/10;1/70*

U.S. Cl. 341—120 **7 Claims**

1. A D/A converter, which generates an analog output current that is in response to the level of input digital data and outputs it from an output side by connecting each of output currents of a plurality of constant current circuits either to said output side or to a non-output side, in response to said input digital data, wherein: said D/A converter performs feedback control, for values of said output currents for said constant current circuits, based on an analog output current at said non-output side during a period when

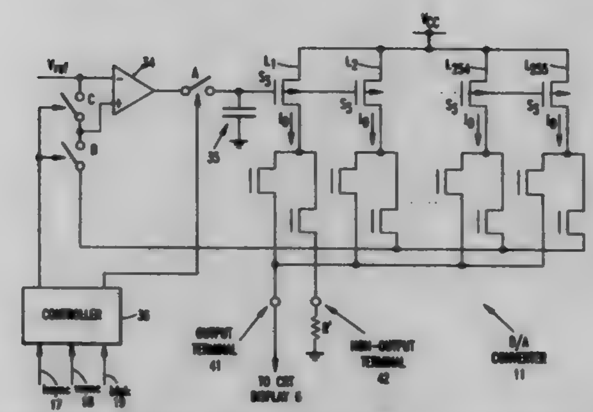

said output currents of all of said constant current circuits are connected to said non-output sides.

5,703,583

METHOD AND APPARATUS FOR SAMPLING QUADRATURE SIGNALS

Adil Ansari, and Zhaohong Zhang, both of Kokomo, Ind., assignors to Delco Electronics Corporation, Kokomo, Ind.

Filed Oct. 30, 1995, Ser. No. 550,322

Int. Cl.⁶ H03M *1/00*

U.S. Cl. 341—122 **8 Claims**

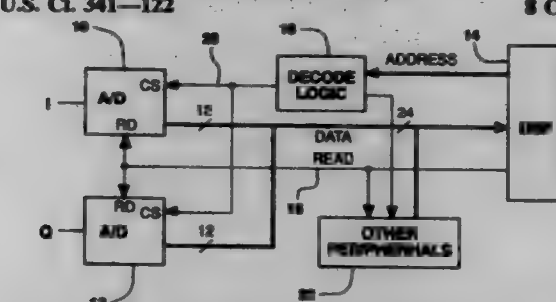

1. The method of simultaneously sampling quadrature signals in first and second channels comprising the steps of:
simultaneously performing analog-to-digital conversion on signals in said first and second channels to form respective first and second digital signals;
combining said first and second digital signals to form a single digital signal containing said first and second digital signals in first and second separable portions;
reading said single digital signal; and
starting another conversion for said first and second channels immediately after the reading of said single digital signal.

5,703,584

ANALOG DATA ACQUISITION SYSTEM

John P. Hill, Nederland, Colo., assignor to Adaptec, Inc., Milpitas, Calif.

Filed Aug. 22, 1994, Ser. No. 293,973

Int. Cl.⁶ H03M *1/12*

U.S. Cl. 341—141 **39 Claims**

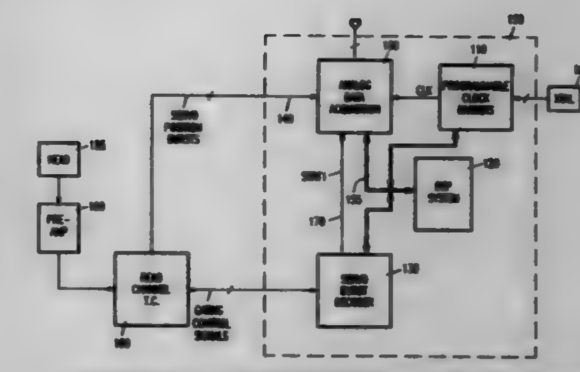

1. An analog data acquisition system comprising:
an analog input multiplexer having a plurality of input lines, an output line and a plurality of signal select lines;
an analog-to-digital (A/D) converter having an input line, a digital output bus, and a plurality of control lines; wherein said input line of said A/D converter is connected to said analog input multiplexer output line; and
an acquisition sequencer coupled to said plurality of signal select lines and to said plurality of control lines; wherein said acquisition sequencer comprises:
a state machine connected to said plurality of control lines of said A/D converter wherein said state machine generates said signals over said plurality of control lines so that each signal on said A/D converter input line is converted to a digital signal; and further wherein
said acquisition sequencer provides signals over said plurality of signal select lines so that a signal on one of said plurality of input lines to said analog input multiplexer is applied to said A/D converter; and
said acquisition sequencer provides signals over said plurality of control lines so that each signal on said A/D converter input line is converted to a digital signal.

5,703,585

HIGH-SPEED MULTIPLEXED DIGITAL-TO -ANALOG CONVERTER

Joe Lamm, Alt. Spgs., and Carl Gilbert, St Pete, both of Fla., assignors to Tech-Source Inc., Altamonte Springs, Fla.

Filed Jul. 31, 1996, Ser. No. 688,848

Int. Cl.⁶ H03M *1/00*

U.S. Cl. 341—141 **10 Claims**

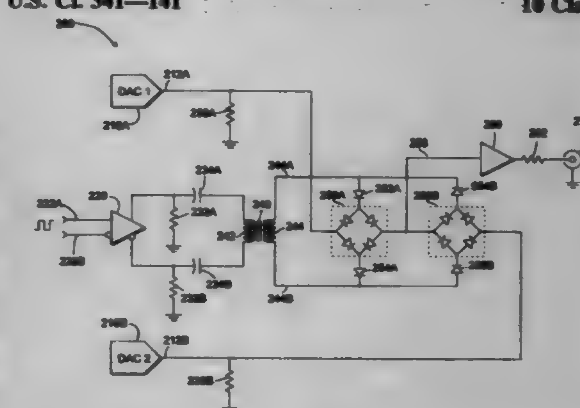

1. A high-speed, low-noise digital-to-analog converter multiplexer, comprising:
at least two digital-to-analog converters, each digital-to-analog converter having an output, each digital to analog converter output producing a voltage-mode output signal;
a plurality of diode bridges equal in number to the number of digital-to-analog converters, each diode bridge having an anode terminal, a cathode terminal, a signal input terminal, and a signal output terminal;
a connection between a signal input terminal of each diode bridge and an output of a respective digital-to-analog converter;
a common connection between the signal output terminals of the diode bridges, providing a multiplexer output signal;
at least one bias signal source producing a biasing signal across two opposite polarity outputs thereof; and
for each diode bridge:
a first diode connected by a cathode terminal thereof to the common anode terminal of its respective diode bridge and connected by a cathode terminal thereof to an output of a bias signal source; and

a second diode connected by an anode terminal thereof to the common cathode terminal of its respective diode bridge and connected by an anode terminal thereof to another output of the bias signal source to which the first diode is connected.

5,703,586

DIGITAL-TO-ANALOG CONVERTER HAVING PROGRAMMABLE TRANSFER FUNCTION ERRORS AND METHOD OF PROGRAMMING SAME

Hans Juergen Tucholski, Gouldavoher, Ireland, assignor to Analog Devices, Inc., Norwood, Mass.

Filed Dec. 7, 1995, Ser. No. 568,453

Int. Cl.[6] H03M *1/66*

U.S. Cl. 341—144 **12 Claims**

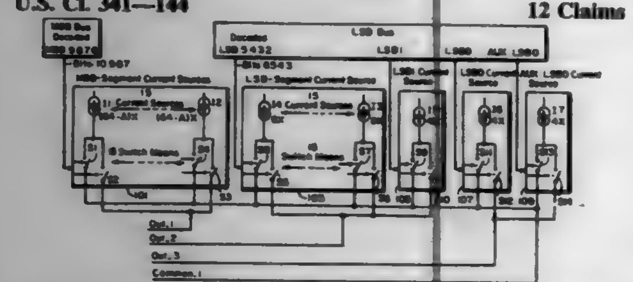

1. A digital-to-analog converter with programmable transfer function errors for providing accuracy and resolution improvements, comprising:

first current-steering converter means responsive to first digital data signals and having predetermined transfer function errors,

second current-steering converter means responsive to second digital data signals and having transfer function errors less than implied by the combined resolution of said first and said second digital data signals,

a plurality of current-steering converter means responsive to a plurality of separate digital data signals and having transfer function errors of less than those of said second current-steering converter means,

memorizing means for said plurality of separate digital data signals,

resistive means, having a predetermined number of terminals connected to the outputs of said first, said second and said plurality of current-steering converter means and providing a digital-to-analog voltage output between two of said number of terminals,

calibration means determining said plurality of separate digital data signals in a manner to program the transfer function of said first current-steering converter means for the purpose of reducing transfer function errors of said digital-to-analog converter voltage output to less than implied by the combined resolution of said first and said second digital data signals,

digital data signal control means operatively controlling said first and said second current-steering converter means in response to said first and second digital data signals and further operatively controlling said plurality of current-steering converter means by selectively accessing said memorizing means for said plurality of separate digital data signals.

5,703,587

DIGITAL-TO-ANALOG CONVERTER HAVING OVERLAPPING SEGMENTS

Iain R. Clark, San Jose, Calif., and Alan Fiedler, Minneapolis, Minn., assignors to LSI Logic Corporation, Milpitas, Calif.

Filed Apr. 19, 1996, Ser. No. 635,338

Int. Cl.[6] H03M *1/66*

U.S. Cl. 341—144 **16 Claims**

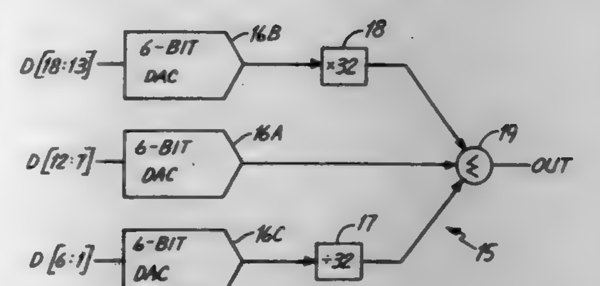

1. A digital-to-analog converter (DAC) for translating a sequence of multi-bit digital word into corresponding analog values, the sequence including a current digital word and a new digital word, wherein the DAC comprises:

circuit means for providing the sequence of digital words, each digital word having a digital value and having multi-bit word portions n_1 and n_2, in which portion n_1 is a least significant portion and portion n_2 is a most significant portion, and in which the weight of the most significant bit (msb) of word portion n_1 is the same as the weight of the least significant bit (lsb) of word portion

decoding means for detecting when the lsb of word portion n_2 changes state from the current digital word to the new digital word and for decoding the new digital word by responsively inverting the state of the msb of word portion n_1 of the new digital word each time the lsb of word portion n_2 changes state; and

circuit means for translating word portions n_1 and n_2 of the decoded new digital word into respective analog values and for summing the respective analog values together to provide an analog output indicative of the digital value of the decoded digital word.

5,703,588

DIGITAL TO ANALOG CONVERTER WITH DUAL RESISTOR STRING

Roberto Rivoir, Bari; Franco Maloberti, Torre d'Isola, and Guido P. Torelli, Sant'Allesio con Vialone, all of Italy, assignors to Atmel Corporation, San Jose, Calif.

Filed Oct. 15, 1996, Ser. No. 730,592

Int. Cl.[6] H03M *1/78*

U.S. Cl. 341—159 **38 Claims**

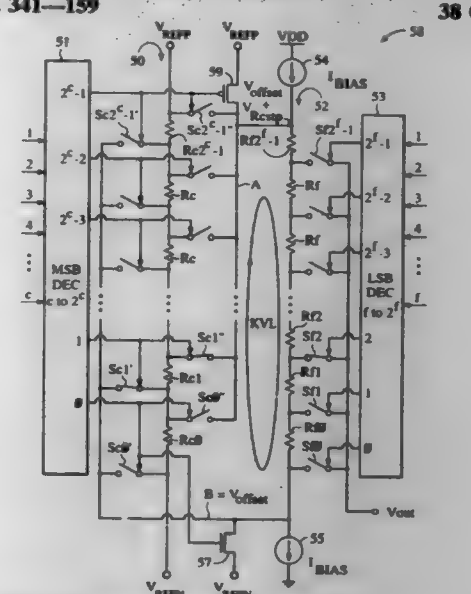

1. A digital-to-analog converter comprising:

a first resistor string having a plurality of first resistors;

a second resistor string having a plurality of second resistors;

a switching means for coupling said second resistor string in parallel to one of said first resistors;

a current source coupled to supply a first current into said second resistor string; and

a current drain coupled to draw a second current from said second resistor string.

5,703,589

SWITCHED CAPACITOR INPUT SAMPLING CIRCUIT AND METHOD FOR DELTA SIGMA MODULATOR

Timothy V. Kalthoff; Binan Wang, and Miaochen Wu, all of Tucson, Ariz., assignors to Burr-Brown Corporation, Tucson, Ariz.

Filed Mar. 8, 1996, Ser. No. 611,329

Int. Cl.[6] H03M *1/12*

U.S. Cl. 341—172 **12 Claims**

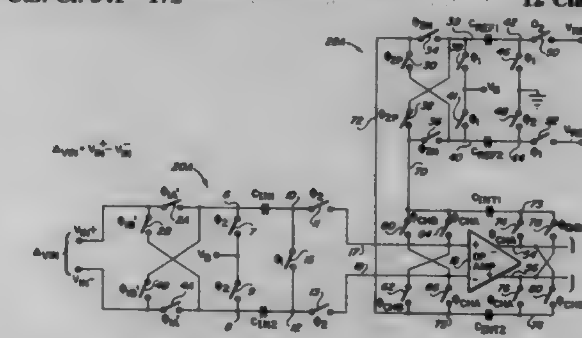

11. In a delta sigma modulator including a switched capacitor feedback reference voltage sampling circuit, an integrator including an amplifier and first and second integrating capacitors, a comparator, a clock generating circuit adapted to generate a plurality of clock signals in accordance with "1" or "0" output signal levels produced by the comparator, the improvement comprising in combination:

a switched capacitor input sampling circuit having first and second input terminals adapted to receive a differential analog input voltage therebetween and first and second terminals coupled to the first and second integrating capacitors, respectively, the switched capacitor input sampling circuit including

(a) a first switch coupled between the first input terminal and a first conductor, and a second switch coupled between the second input terminal and a second conductor;

(b) a third switch coupled between the first conductor and a bias voltage conductor, and a fourth switch coupled between the second conductor and the bias voltage conductor;

(c) a first sampling capacitor coupled between the first conductor and a third conductor, and a second sampling capacitor coupled between the second conductor and a fourth conductor 12;

(d) a fifth switch coupled between the third and fourth conductors; and

(e) means coupled to the first and second conductors for establishing an input common mode bias point for the amplifier without precharging either of the first and second conductors to any predetermined reference voltage.

5,703,590

DETECTING ACTIVE EMITTERS USING SCAN RATE CORRELATION OF TRACKING RECEIVER AND RADAR DATA

Steve Roth, Fullerton, and Thomas A. Kennedy, Manhattan Beach, both of Calif., assignors to Hughes Electronics, Los Angeles, Calif.

Filed May 31, 1996, Ser. No. 656,159

Int. Cl.[6] G01S *3/22*

U.S. Cl. 342—13 **6 Claims**

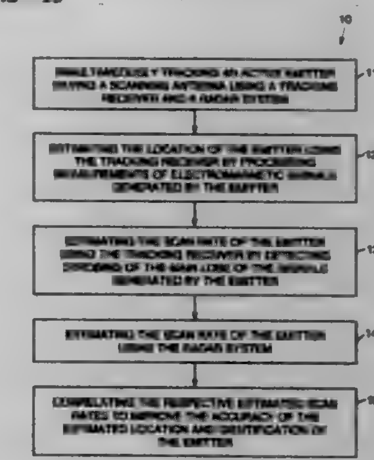

1. A method of processing data derived from a tracking receiver and a radar system that are indicative of the location of an active emitter that improves the accuracy of the location, said method comprising the steps of:

simultaneously tracking an active emitter having a scanning antenna using a tracking receiver and a radar system;

estimating the location of the emitter using the tracking receiver by processing measurements of power or time differences of signals generated thereby;

estimating the scan rate of the emitter using the tracking receiver by detecting strobing of the main lobe of the signals generated thereby;

estimating the scan rate of the emitter using the radar system; and

correlating the respective estimated scan rates to improve the accuracy of the estimated location of the emitter.

5,703,591

AIRCRAFT N-NUMBER CONTROL SYSTEM

Bruce Tognazzini, Woodside, Calif., assignor to Sun Microsystems, Inc., Mountain View, Calif.

Filed Jun. 3, 1996, Ser. No. 657,262

Int. Cl.[6] G01S *13/00*

U.S. Cl. 342—30 **35 Claims**

1. An air traffic control system, comprising:

a receiver configured to receive first and second aircraft identification information signals representing respective first and second groups of alphanumeric characters corresponding to first and second aircraft, said second aircraft identification information signal being received subsequent to said first aircraft identification information signal; and

a processor configured to process said first aircraft identification information signal into a first code signal representing a first alphanumeric code and said second aircraft identification information signal into a second code signal representing a second alphanumeric code, to determine whether said second alphanumeric code exceeds a specified degree of similarity to said first alphanumeric code, and to generate, as an output signal, either said second code signal if said second alphanumeric code does not exceed said specified degree of similarity

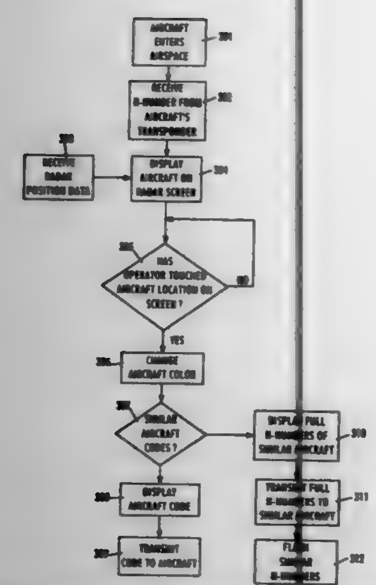

to said first alphanumeric code or said second aircraft identification information signal if said second alphanumeric code exceeds said specified degree of similarity.

5,703,592
METHOD AND APPARATUS FOR ESTIMATING THE DETECTION RANGE OF A RADAR
Simon Watts, Surrey, England, assignor to Racal Radar Defence Systems Limited, Bracknell, England
Filed Jan. 5, 1996, Ser. No. 583,508
Claims priority, application United Kingdom, Jan. 17, 1995, 9500878
Int. Cl.⁶ G01S *7/34*
U.S. Cl. 342—93 **16 Claims**

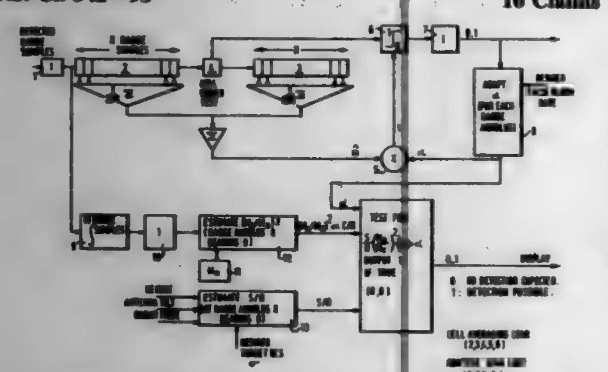

1. A method of estimating a detection range R_1 of a radar when noise and clutter are present comprising the steps of:
measuring radar return signals from successive range cells under test,
determining a factor α by which the mean value of those signals is to be multiplied to form a threshold value for determining the presence or absence of a target whilst maintaining a desired false alarm rate,
determining, from a number of radar return signals sufficient substantially to average out local variations in clutter, a mean clutter value m_c, and
outputting as the estimate of detection range R_1 a value which is a function of α and m_c.

5,703,593
ADAPTIVE DPCA SUBSYSTEM
Thomas A. Campbell, Huntington, N.Y.; Heinz H. Schreiber, Melbourne, Fla., and Niki Yloves, Douglaston, N.Y., assignors to Northrop Grumman Corporation, Los Angeles, Calif.
Filed Dec. 12, 1995, Ser. No. 571,001
Int. Cl.⁶ G01S *13/534*
U.S. Cl. 342—96 **10 Claims**

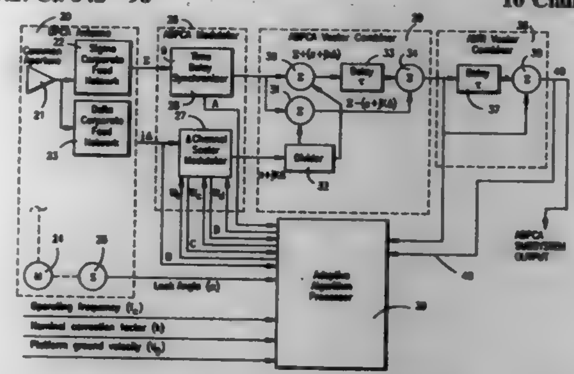

1. In a signal processing subsystem, including:
means for receiving a signal at a predetermined interval and converting said signal into signals representative of a sum channel vector and a difference channel vector;
means for modifying the difference channel vector to obtain a correction vector;
means for subtracting the correction vector from the sum channel vector to obtain a difference vector;
means for adding the correction vector to the sum channel vector to obtain a sum vector;
means for storing the sum vector for said predetermined interval;
means for combining the difference vector with the sum vector after having stored the sum vector for said predetermined interval, wherein the improvement comprises:
weight processor means connected between the vector combiner means and the difference channel modulating means for combining an output of said vector combiner with said difference channel signal in order to adaptively modify said correction vector to optimize said output of said vector combiner means.

5,703,594
METHOD FOR REMOTELY DETECTING TIDES AND THE HEIGHT OF OTHER SURFACES
Kenneth D. Anderson, San Diego, Calif., assignor to The United States of America as represented by the Secretary of the Navy, Washington, D.C.
Filed Jun. 24, 1996, Ser. No. 668,874
Int. Cl.⁶ G01S *13/58*
U.S. Cl. 342—123 **14 Claims**

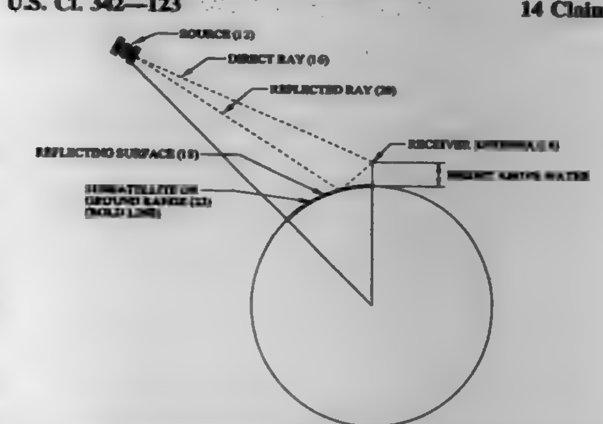

1. A method for determining the distance of a transducer from a surface comprising the steps of:
(a) transmitting a signal from a source;

(b) receiving on said transducer said signal directly from said signal source, said transducer being an unknown distance from said surface
(c) receiving on said transducer said signal indirectly from said source by way of a reflection of said signal from said surface;
(d) moving said source with respect to said transducer;
(e) repeating steps a, b and c as said source moves;
(f) generating an interference pattern from said directly and indirectly received signals, said interference pattern depicting a signal characteristic with respect to a measurement indicative of distance between said source and said transducer;
(g) selecting points on said interference pattern at substantially the same phase angle of each cycle of said interference pattern;
(h) assigning sequential reference numbers to said points;
(i) creating a plot of said reference numbers with respect to said measurement;
(j) determining the slope of said plot;
(k) generating reference interference patterns for a plurality of known transducer-to-surface distances;
(l) repeating steps g–j for said reference interference patterns;
(m) creating a plot of said reference interference pattern slopes determined in step l with respect to said known transducer-to-surface distances;
(n) describing said plot created in step m in terms of an equation relating said known transducer-to-surface distances with respect to said slopes created in step m; and
(o) inserting said slope determined in step j into said equation and solving for said unknown distance.

5,703,595
METHOD AND APPARATUS FOR ERRATIC DOPPLER FREQUENCY SHIFT COMPENSATION
Daniel Richard Tayloe, Phoenix; Nathan West Miller, Tempe, and Robert Thomas Frederick, Chandler, all of Ariz., assignors to Motorola, Inc., Schaumburg, Ill.
Filed Aug. 2, 1996, Ser. No. 691,256
Int. Cl.⁶ G01S *13/00;* **H04B** *1/10*
U.S. Cl. 342—175 **24 Claims**

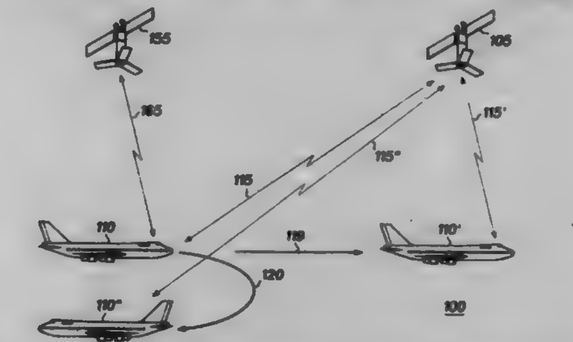

1. In a communication system having a portable communication unit in motion with a dynamic velocity vector, a method for tracking and compensating erratic Doppler frequency shift in a communication link employing a frequency offset for Doppler compensation, said method comprising the steps of:
measuring a present velocity vector of said portable communication unit;
calculating a differential velocity vector between said present velocity vector and a previous velocity vector, said previous velocity vector being an earlier iterative stored sample of a velocity vector;
supplementing standard frequency offset generation with said differential velocity vector, said standard frequency offset generation providing adequate tracking of non-erratic Doppler frequency shift; and
generating said frequency offset using said standard frequency offset generation and said differential velocity vector.

5,703,596
DEMODULATING INTEGRATOR/DEMULTIPLEXER
Stanley A. White, San Clemente, Calif., assignor to Boeing North American, Inc., Seal Beach, Calif.
Filed Aug. 2, 1996, Ser. No. 691,766
Int. Cl.⁶ G01S *7/30*
U.S. Cl. 342—194 **8 Claims**

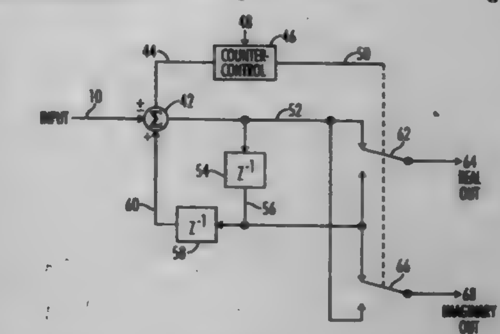

1. Apparatus for producing a complex-demodulated-and-integrated sampled radar signal from a sampled radar signal, wherein:
(a) the sampled radar signal has been generated by combining a radar signal and a sampling clock signal;
(b) the sampling clock signal has a sampling frequency;
(c) the sampled radar signal has a center frequency equal to a fourth of the sampling frequency, and has a bandwidth less than half the sampling frequency; and
(d) the apparatus comprises:
(1) a counter-control signal generator connected to receive the sampling clock signal, and constructed to produce a first control signal and a second control signal;
(2) a combiner constructed to add the sampled radar signal to a feedback signal when the first control signal is one, and to otherwise subtract the sampled radar signal from the feedback signal, thereby producing a combiner output signal;
(3) a first delay element connected to receive the combiner output signal and constructed to thereby provide a first delayed output signal;
(4) a second delay element connected to receive the first delayed output signal and constructed to thereby provide a second delayed output signal, the second delayed output signal being the feedback signal;
(5) a first multiplexer switch constructed to output the combiner output signal when the second control signal is one and to output the first delayed output signal otherwise, an output signal from the first multiplexer switch being an in-phase component of the complex-demodulated-and-integrated sampled radar signal; and
(6) a second multiplexer switch constructed to output the combiner output signal when the second control signal is zero and to output the first delayed output signal otherwise, an output signal from the second multiplexer switch being a quadrature component of the complex-demodulated-and-integrated sampled radar signal.

5,703,597
ADAPTIVE CARRIER PHASE LOCK LOOP IN A GPS RECEIVER
Jimmy Yu, Olathe, Kans., and Guy Lewellen, Northants, United Kingdom, assignors to AlliedSignal, Inc., Morristown, N.J.
Filed Dec. 22, 1995, Ser. No. 577,502
Int. Cl.⁶ H04B *7/185;* **G01S** *5/02*
U.S. Cl. 342—357 **16 Claims**

1. In a GPS system including a receiver operable for tracking the position of a vehicle, the receiver including receiving means for receiving signals from a GPS satellite, generating means for generating replica signals of the received signals, comparing means for comparing the replica signals with the received signals, and a

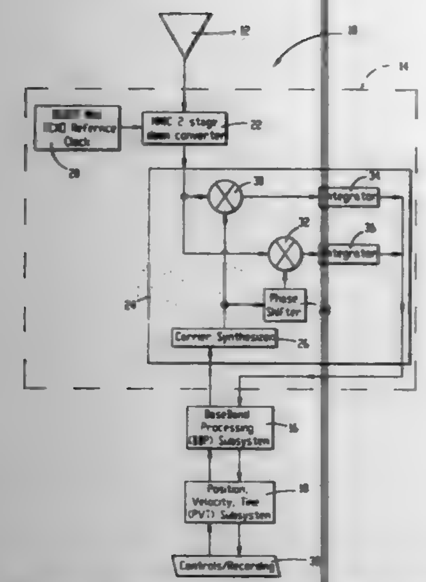

phase lock loop for shifting the replica signals until they match the received signals and for locking the replica signals with the received signals, a method for automatically adjusting the bandwidth of the phase lock loop, said method comprising the steps of:
(a) calculating the acceleration rate of the vehicle; and
(b) in response to step (a), altering the bandwidth of said phase lock loop in correlation with said calculated acceleration rate for maintaining the lock between the replica signals and the received signals.

5,703,598
METHOD AND SYSTEM FOR TRACKING STOLEN PROPERTY
Ardath H. Emmons, 13217 W. Marble Dr., Sun City West, Ariz. 85375
Filed May 24, 1996, Ser. No. 653,488
Int. Cl.⁶ G01S *5/02*
U.S. Cl. 342—357 **5 Claims**

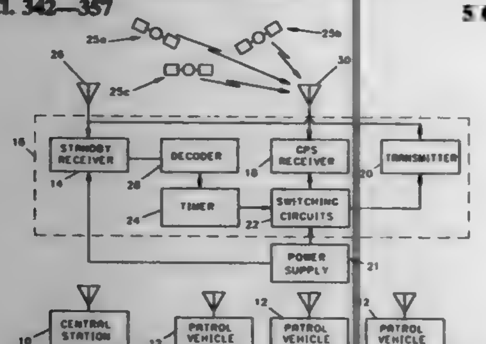

1. A method of locating a stolen piece of property using signals transmitted from a global position satellite system orbiting the earth, comprising the steps of
mounting a first radio receiver with said property, continuously connecting said first radio receiver to a source of electric power,
mounting a second radio receiver with said property, said second radio receiver being adapted to receive said signals from said global position satellite system and to process said signals to provide data corresponding to the geographical position of said second receiver,
transmitting from a location remote from said property a radio signal including a unique code associated with said piece of property and said first radio receiver,
when a radio signal is received by said first radio receiver which corresponds to said unique code, connecting said second radio receiver to a source of electric power for only a predetermined time period to permit said second radio receiver to receive said signals from said global position satellite system during said predetermined time period and to process said signals to provide geographical position data, and
transmitting said geographical position data derived from said signals from said global position satellite system to a central station.

5,703,599
INJECTION MOLDED OFFSET SLABLINE RF FEEDTHROUGH FOR ACTIVE ARRAY APERTURE INTERCONNECT
Clifton Quan, Arcadia; Peter Holbrook, Los Angeles; Bill Batterton, Torrance; Pat Fitzgerald, Northridge; Dan Roper, Redondo Beach, and Min Takaki, Arleta, all of Calif., assignors to Hughes Electronics, Los Angeles, Calif.
Filed Feb. 26, 1996, Ser. No. 607,037
Int. Cl.⁶ H01Q *3/26*
U.S. Cl. 342—368 **7 Claims**

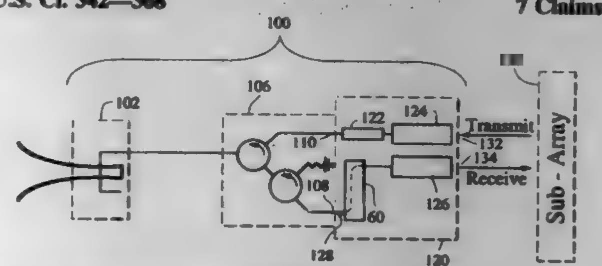

1. An active radar array, comprising:
a plurality of radiating elements, each element having at least one radiator port associated therewith;
a plurality of transmit/receive (T/R) modules, each module associated with a corresponding radiating element, each T/R module having at least one T/R port associated therewith, wherein the T/R port is a coaxial transmission line;
wherein the radiator port and the T/R port lie on different lattices and are offset from each other in at least two dimensions, and wherein the radiator port is a microstrip transmission line; and
an offset RF interconnection structure for RF interconnection between said radiator port and said T/R port, the interconnection structure comprising a dielectric filled slabline transmission line, the line including a slabline wire center conductor bent to assume one or more bends and form an offset conductor, the conductor having first and second conductor ends, a dielectric body surrounding a portion of the wire center conductor, the first and second wire ends to interconnect with the respective radiator and T/R ports, wherein the first and second wire ends are disposed in respective first and second axes which are not collinear, and an outer slabline conductive housing within which said dielectric body is disposed, said housing comprising first and second generally parallel opposed planar conductive wall surfaces, and the offset RF interconnection structure further includes an in-line section of coaxial line connected to one end of the slabline transmission line and a transition structure between said in-line section and said microstrip transmission line.

5,703,600
MICROSTRIP ANTENNA WITH A PARASITICALLY COUPLED GROUND PLANE
Dennis A. Burrell, Bedford; James Talmage Davis, II, Fort Worth, both of Tex., and Mauricio Flores, Lake Worth, Fla., assignors to Motorola, Inc., Schaumburg, Ill.
Filed May 8, 1996, Ser. No. 643,442
Int. Cl.⁶ H01Q *1/38*
U.S. Cl. 343—700 MS **18 Claims**

1. A microstrip antenna, comprising:
a planar antenna radiating element having at least a first major surface;

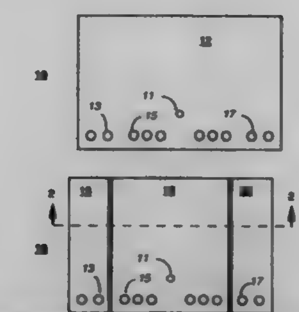

a ground plane having at least a first major surface substantially parallel to a second major surface, wherein the first major surface and the second major surface are on the same plane;
a dielectric material positioned between the planar antenna radiating element and the ground plane; and
a gap between the first major surface of the ground plane and the second major surface of the ground plane, wherein the first major surface is parasitically coupled to the second major surface creating an increased impedance bandwidth and a lower operating frequency antenna.

5,703,601
DOUBLE LAYER CIRCULARLY POLARIZED ANTENNA WITH SINGLE FEED
Vahakn Nalbandian, Ocean, N.J., and Choon Sae Lee, Dallas, Tex., assignors to The United States of America as represented by the Secretary of the Army, Washington, D.C.
Filed Sep. 9, 1996, Ser. No. 709,790
Int. Cl.⁶ H01Q *1/38*
U.S. Cl. 343—700 MS **3 Claims**

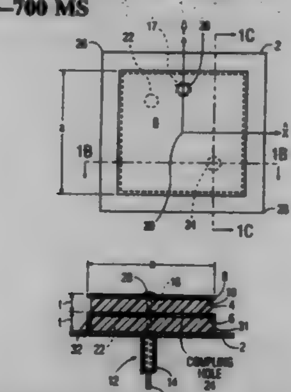

1. A circularly polarized antenna comprising:
first, second and third layers of conductive material, said second and third layers being rectangular and similarly oriented, with each having first and second pairs of opposed edges;
a first layer of electrically insulating material between said first and second layers of conductive material;
a second layer of electrically insulating material between said second and third layers of conductive material;
sheets of conductive material electrically connecting the first pair of opposed edges of said second layer of conductive material with said first conductive layer;
sheets of conductive material electrically connecting the second pair of opposed edges of said second and third layers of conductive material;
means defining first and second openings in said second layer of conductive material, said first and second openings being located along a diagonal of said second layer;
means defining a third opening in said first layer of conductive material;
a coaxial connector having a central conductor within a conductive sheath;
said conductive sheath being connected to the periphery of said third opening; and
said central conductor being connected to said second and third layers of conductive material at an impedance matching point.

5,703,602
PORTABLE RF ANTENNA
Matthew Phillip Casebolt, Fremont, Calif., assignor to Metricom, Inc., Los Gatos, Calif.
Filed Jun. 14, 1996, Ser. No. 663,883
Int. Cl.⁶ H01Q *1/24*
U.S. Cl. 343—702 **24 Claims**

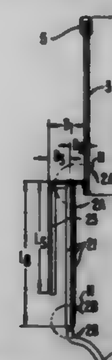

1. A collapsible half-wavelength dipole antenna for use in a portable device, said antenna having a fully collapsed position and a fully extended position, said antenna comprising:
a static dipole arm;
a movable dipole arm, said movable dipole arm capable of being moved to the fully collapsed position and the fully extended position;
a balun feed assembly, said balun feed assembly electrically coupled to said static dipole arm and to said movable dipole arm, said antenna capable of transmitting and receiving electrical signals in either the fully collapsed position or the fully extended position, said balun feed assembly fixed to said static dipole arm, and said movable dipole arm movably coupled to said balun feed assembly.

5,703,603
MULTI-BEAM LENS ANTENNA
Petr Nikolaevich Korzhenkov; Jury Leonidovich Pyalt; Alexandr Semenovich Smagin, and Alexandr Lvovich Epshtein, all of Moscow, Russian Federation, assignors to Tovarischestvo S Ogranichennoi Otvetstvennostju "Konkur", Moscow, Russian Federation
PCT No. PCT/RU94/00097, § 371 Date Dec. 27, 1995, § 102(e) Date Dec. 27, 1995, PCT Pub. No. WO95/30254, PCT Pub. Date Nov. 9, 1995
PCT Filed Apr. 28, 1994, Ser. No. 578,702
Int. Cl.⁶ H01Q *3/14; 19/06*
U.S. Cl. 343—753 **5 Claims**

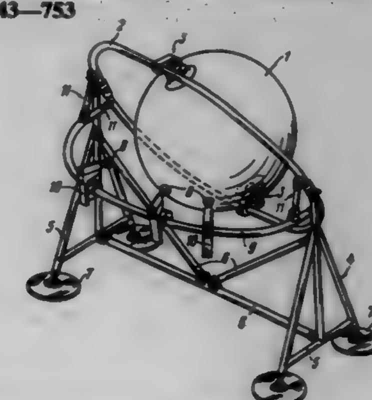

1. Multi-beam lens antenna, comprising:
a centro-symmetric spherical lens fixed by means of first fastening joints to an elliptical frame having a long axis and a short axis, so that the center of the lens lies outside the plane of the frame, said frame being supported by a base and being capable of rotating relative to the base, and

illuminators positioned on a semi-circle guide joined to the frame by means of second fastening joints and installed from the side opposite the position of the lens center,

wherein each of said first joints comprises a screw member coupled to the frame and having a round head engaged with a support member attached to the lens, to enable adjustment of the lens with respect to the frame,

the semi-circle guide is arranged in a plane parallel to the plane which passes through the center of the lens and the long axis of the frame, and

the base is adapted to rotate the lens, the frame and the semi-circle guide relative to the long axis of the frame to enable alignment of the lens.

5,703,604

IMMERSIVE DODECAHERDRAL VIDEO VIEWING SYSTEM

David McCutchen, Portland, Oreg., assignor to Dodeca LLC, Portland, Oreg.

Filed May 22, 1995, Ser. No. 445,658

Int. Cl.^{6} G09G *5/00*

U.S. Cl. 345—8 **18 Claims**

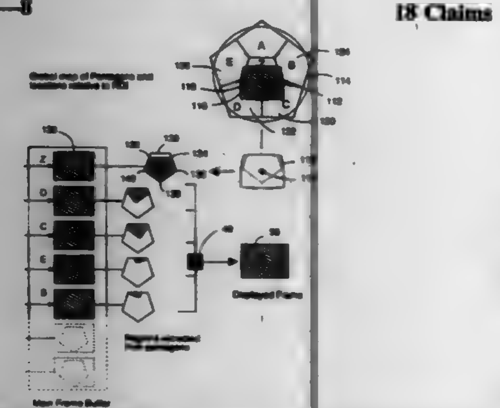

1. An apparatus for reproduring a portion of a spherical view up to a complete sphere, comprising:

(a) input means for a plurality of video images representing a plurality of pentagonal sections derived from dodecahedral divisions of a spherical field of view,

(b) digital memory means comprising a matrix wherein is stored information representing the pixels of said plurality of video images,

(c) at least one viewing device with a movable viewing aperture window capable of reporting the location of said movable viewing aperture window on a sphere as a location signal, and capable of displaying at least a portion of said video images,

(d) addressing means for said matrix whereby said information representing said pixels is presented to said aperture window of said viewing device according to said location signal so that the edges of pentagonal sections originally adjacent to each other in the spherical field of view are made adjacent also within said aperture window, thereby creating an apparent substantially continuous image within said aperture window.

5,703,605

IMAGE DISPLAY APPARATUS

Koichi Takahashi, and Yoichi Iba, both of Hachoji, Japan, assignors to Olympus Optical Co., Ltd., Tokyo, Japan

Filed Dec. 5, 1995, Ser. No. 567,231

Claims priority, application Japan, Dec. 5, 1994, 6-300616

Int. Cl.^{6} G09G *5/00*

U.S. Cl. 345—8 **6 Claims**

1. An image display apparatus having an image display device for displaying an image, means for illuminating said image display device, and an ocular optical system for projecting an image

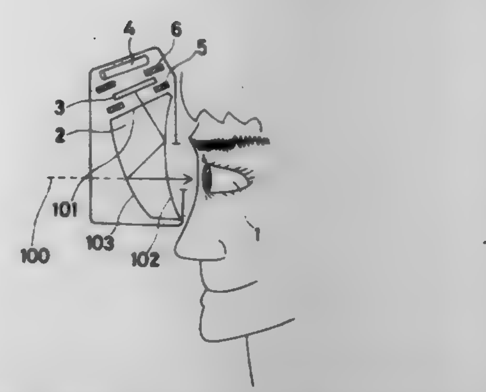

formed by said image display device and for leading the projected image to an observer's eyeball, said image display apparatus comprising:

a field stop provided in said ocular optical system or between said ocular optical system and said image display device; and

light-blocking means provided between said image display device and said illuminating means such that a distance from said field stop to said image display device and a distance from said image display device to said light-blocking means are approximately equal to each other.

5,703,606

THREE DIMENSIONAL DISPLAY SYSTEM

Barry George Blundell, 10 Hanover Place, Ilam, Christchurch 8004, New Zealand

PCT No. PCT/NZ93/00083, § 371 Date Apr. 25, 1995, § 102(e) Date Apr. 25, 1995, PCT Pub. No. WO94/06248, PCT Pub. Date Mar. 17, 1994

PCT Filed Sep. 10, 1993, Ser. No. 397,050

Claims priority, application New Zealand, Sep. 10, 1992, 244290; Aug. 9, 1993, 248352

Int. Cl.^{6} G09G *1/20;* H04N *13/04*

U.S. Cl. 345—22 **25 Claims**

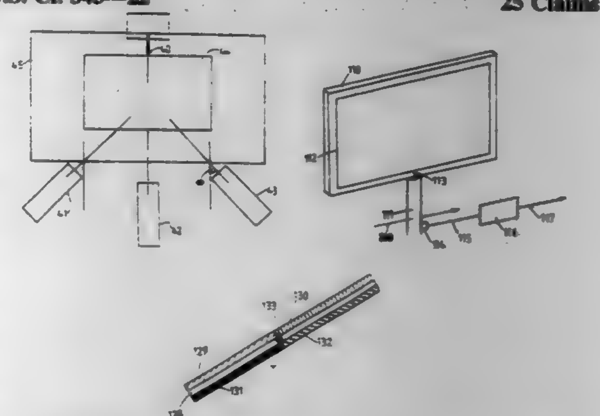

1. A display system comprising:

an evacuated enclosure, at least part of the enclosure being transparent;

a phosphor coated screen within the enclosure;

means to rotate the screen within the enclosure so that the screen sweeps out a display volume;

one or more electron gun within the enclosure positioned so that images may be written to the screen as it sweeps out the display volume;

control means to provide drive signals to the one or more electron gun in accordance with image information supplied thereto; and

wherein each side of the screen is divided into two halves about the axis of rotation of the screen, each of the four screen halves being coated with a phosphor producing a different colored light when excited by an electron beam.

5,703,607

DRIVE CIRCUIT FOR DISPLAYING SEVEN-SEGMENT DECIMAL DIGIT

Wen-Chung Tai, Taoyuan, Taiwan, assignor to Acer Peripherals, Inc., Taipei, Taiwan

Filed Mar. 27, 1996, Ser. No. 622,959

Int. Cl.^{6} G09G *3/14*

U.S. Cl. 345—34 **2 Claims**

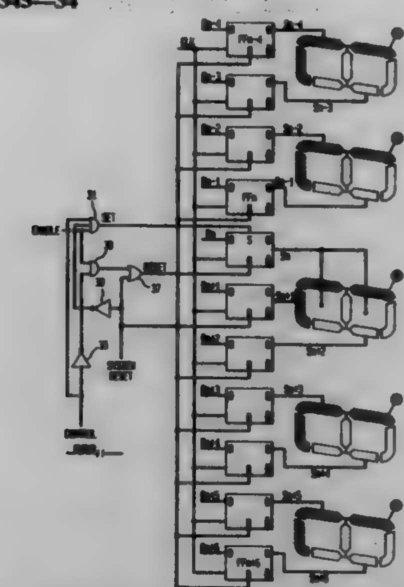

1. A drive circuit for a decimal digit display, said decimal digit display includes a plurality of display units of seven-segment and a display unit of a partition symbol, each of the plurality of display units including a first display portion and a second display portion, and, responsive to a set of signals, the first display portion and the second display portion being enabled to display, the drive circuit comprising:

at least a pair of buffers, each of which storing the set of signals;

a partition symbol display buffer, having an output value controlling display of the display unit of partition symbol;

a control circuit for resetting and setting the partition symbol display buffer in accordance with a predetermined manner thereby causing the display unit of partition symbol to display intermittently.

5,703,608

SIGNAL PROCESSING CIRCUIT

Kaeko Kuga, Kyoto, Japan, assignor to Rohm Co., Ltd., Tokyo, Japan

Filed Oct. 3, 1995, Ser. No. 538,375

Claims priority, application Japan, Oct. 4, 1994, 6-240103

Int. Cl.^{6} G09G *3/36*

U.S. Cl. 345—99 **7 Claims**

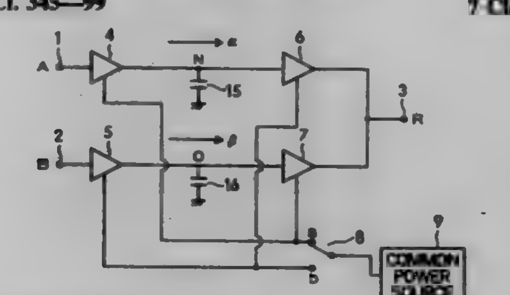

1. A signal processor comprising:

a first input terminal supplied with a first signal;

a second input terminal supplied with a second signal;

first and second input buffers connected to the first and second input terminals, respectively;

a first capacitor connected to an output side of the first input buffer and to a reference potential point for holding the first signal;

a second capacitor connected to an output side of the second input buffer and to the reference potential point for holding the second signal;

a first output buffer connected to the first capacitor;

a second output buffer connected to the second capacitor;

an output terminal supplied with outputs of the first and second output buffers;

a power source for activating the first and second input buffers and the first and second output buffers; and

switch means which alternately repeats a first period during which the first input buffer and the second output buffer are connected to the power source and a second period during which the second input buffer and the first output buffer are connected to the power source.

5,703,609

EMULATION OF SINGLE LINE DISPLAY WITH MULTI-LINE DISPLAY DRIVER

Michael Timothy Malley, LeRoy, N.Y., assignor to Eastman Kodak Company, Rochester, N.Y.

Filed Mar. 10, 1995, Ser. No. 418,395

Int. Cl.^{6} G09G *3/20*

U.S. Cl. 345—56 **16 Claims**

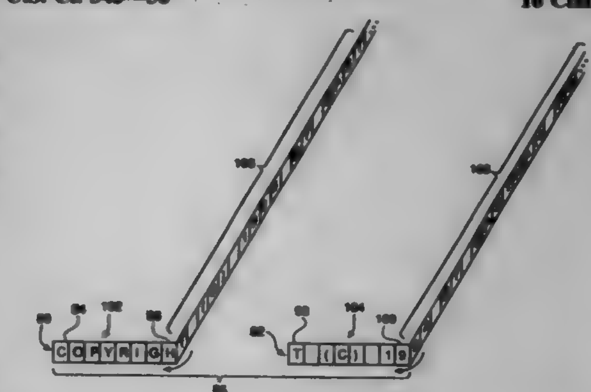

1. A method for emulating a single line display of a predetermined length with a display driver for driving at least two independent single line displays, said display driver including a memory for storing at least two messages for display on said at least two independent single line displays, each of said at least two independent single line displays having a length less than said predetermined length, said method comprising steps of:

providing a single line display of said predetermined length;

storing a message for display in said memory;

displaying as much of said message for display as will fit in a first part of said single line display of said predetermined length; and

displaying as much of a truncated version of said message for display as will fit in a second part of said single line display of said predetermined length adjacent said first part, said truncated version having an offset at a beginning of said message for display equal to a length of said first part, said display driver driving said single line display of said predetermined length.

5,703,610

DRIVE CIRCUIT FOR IMAGE DISPLAY DEVICE

Takao Kishino; Koji Onodaka; Mitsuru Tanaka, and Satoshi Yamaguchi, all of Mobara, Japan, assignors to Futaba Denshi Kogyo K.K., Mobara, Japan

Filed Mar. 1, 1996, Ser. No. 609,348

Claims priority, application Japan, Mar. 3, 1995, 7-068987

Int. Cl.[6] G09G *3/22*

U.S. Cl. 345—74 **3 Claims**

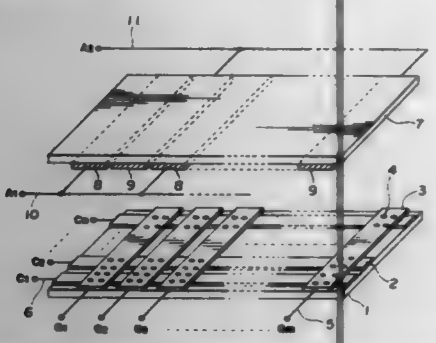

1. A drive circuit for an image display device, wherein said image display device comprises:

a first substrate;

a plurality of cathode electrodes formed on said first substrate in a stripe-like manner and including emitters for field-emitting electrons;

cathode lead-out electrodes led out of said cathode electrodes, respectively;

a plurality stripe-like gate electrodes laminatedly formed on said cathode electrodes in a manner to be perpendicular to said cathode electrodes while being insulated from said cathode electrodes;

gate lead-out electrodes led out of said gate electrodes, respectively;

a second substrate arranged so as to be spaced at a predetermined distance from said first substrate;

a plurality of stripe-like anode electrodes arranged in parallel to said gate electrodes and opposite to said gate electrode in positional relationship of 1:1;

phosphors arranged on said anode electrodes in turn to display a color image; and

a first anode lead-out electrode connected to said anode electrodes at every second interval and a second anode lead-out electrode connected to the remaining part of said anode electrodes;

said first and second anode lead-out electrodes being alternately driven;

only a part of said gate electrodes arranged opposite to said anode electrodes driven being driven;

a part of said gate electrodes adjacent to said gate electrodes driven being kept at a low level.

5,703,611

IMAGE DISPLAY DEVICE AND DRIVE DEVICE THEREFOR

Takao Kishino; Tatsuo Yamaura; Koji Onodaka, and Shigeo Itoh, all of Mobara, Japan, assignors to Futaba Denshi Kogyo K.K., Mobara, Japan

Continuation of Ser. No. 251,245, May 31, 1994, abandoned. This application Dec. 27, 1996, Ser. No. 777,193

Claims priority, application Japan, May 31, 1993, 5-149911; May 31, 1993, 5-149912; May 28, 1993, 5-028256

Int. Cl.[6] G09G *3/22*

U.S. Cl. 345—74 **16 Claims**

1. A drive device for an image display device comprising:

a first substrate;

a plurality of stripe-like cathode electrodes formed on said first substrate and including emitters for field-emitting electrons;

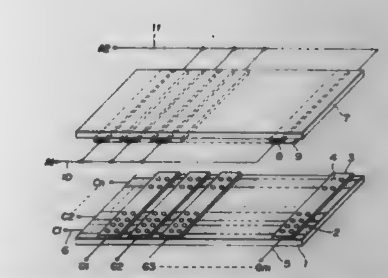

cathode lead-out electrodes led out of said stripe-like cathode electrodes, respectively;

a plurality of stripe-like gate electrodes arranged on said stripe-like cathode electrodes, in a manner to be perpendicular to said stripe-like cathode electrodes while being kept insulated from said stripe-like cathode electrodes;

gate lead-out electrodes led out of said stripe-like gate electrodes;

a second substrate arranged in a manner to be spaced by a predetermined distance from said first substrate;

a plurality of first stripe-like anode electrodes formed on said second substrate in a manner to be opposite to said stripe-like gate electrodes and perpendicular to said stripe-like cathode electrodes;

a plurality of second stripe-like anode electrodes formed on said second substrate in a manner to be opposite to said stripe-like gate electrodes and perpendicular to said stripe-like cathode electrodes, said first stripe-like anode electrodes being interleaved with said second stripe-like anode electrodes;

a first anode lead-out electrode connected to said first stripe-like anode electrodes and led out of said first stripe-like anode electrodes;

a second anode lead-out electrode connected to said second stripe-like anode electrodes and led out of said second stripe-like anode electrodes;

phosphors arranged on said first and second stripe-like anode electrodes, to thereby provide red, blue and green luminous colors in turn; and

a scanning means for scanning said cathode lead-out electrodes in turn while one of said first and second anode lead-out electrodes is kept selected and then scanning said cathode lead-out electrodes in turn while the other of said first and second anode lead-out electrodes is kept selected;

said scanning means permitting said image display device to display an image.

5,703,612

ILLUMINATED POINTER FOR AN ANALOG GAUGE AND RELATED METHOD OF USE AND MANUFACTURE

Michael E. Salmon, Lapeer, and Brent W. Pankey, Davison, both of Mich., assignors to Nu-Tech & Engineering, Inc., Lapeer, Mich.

Filed Jan. 20, 1995, Ser. No. 376,003

Int. Cl.[6] G09G *3/00;* **G08B** *5/24*

U.S. Cl. 345—75 **11 Claims**

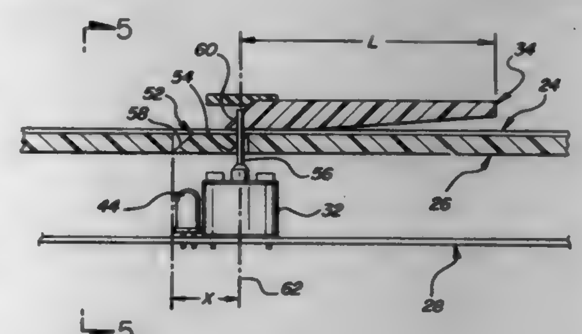

1. An analog gauge comprising:

a graphic layer having a front surface defining scale indicia, a rear surface, and an aperture extending through the graphic layer in proximity to the scale indicia;

a gauge motor mounted adjacent the graphic layer rear surface, said gauge motor having a rotary output shaft locally normal to the graphic layer aligned with the aperture;

a gauge pointer oriented adjacent to the scale indicia on the graphic layer front surface, said gauge pointer affixed to and rotated by the gauge motor output shaft to provide analog information to a viewer of the gauge;

a facet for redirecting light into the gauge pointer, said facet having a first light reflecting surface inclined relative to the gauge motor output shaft and a bore extending through the first light reflecting surface sized to enable the gauge motor output shaft to freely pass therethrough, said first light reflecting surface redirecting light in a path normal to the gauge motor output shaft to an axial path parallel to the gauge motor output shaft;

a graphic layer light source cooperating with the graphic layer to illuminate the indicia thereon; and

a pointer light source cooperating with the facet for illuminating the pointer, said pointer light source providing a variable degree of illumination to the pointer which may be regulated independent of the graphic layer light source.

5,703,613

Patent Not Issued For This Number

5,703,614

DRIVING METHOD FOR FERROELECTRIC OPTICAL MODULATION DEVICE

Akihiro Mouri, Kokubunji; Tsutomu Toyono, Yokohama; Shuzo Kaneko, Tokyo; Yutaka Inaba, Kawaguchi, and Junichiro Kanbe, Yokohama, all of Japan, assignors to Canon Kabushiki Kaisha, Tokyo, Japan

Division of Ser. No. 34,401, Mar. 19, 1993, Pat. No. 5,440,412, which is a division of Ser. No. 666,893, Mar. 8, 1991, Pat. No. 5,255,110, which is a division of Ser. No. 455,299, Dec. 22, 1989, Pat. No. 5,018,841, which is a division of Ser. No. 266,169, Nov. 2, 1988, Pat. No. 5,132,818, which is a division of Ser. No. 942,716, Dec. 17, 1986, Pat. No. 4,836,656. This application Apr. 14, 1995, Ser. No. 422,576

Claims priority, application Japan, Dec. 25, 1985, 60-295304; Dec. 25, 1985, 60-295305; Dec. 25, 1985, 60-295308; Jan. 7, 1986, 61-001186

Int. Cl.[6] G09G *3/36;* **G02F** *1/133*

U.S. Cl. 345—97 **12 Claims**

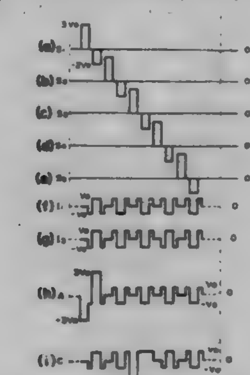

1. A driving method for driving an optical modulation device comprising: a plurality of picture elements arranged in the form of a matrix having a plurality of rows and a plurality of columns defined by the intersections of scanning electrodes arranged in rows and signal electrodes arranged in columns, and a chiral smectic liquid crystal, the picture elements in each row being selectively supplied with either a voltage for orienting the chiral smectic liquid crystal to one display state, or another voltage for orienting the chiral smectic liquid crystal to another display state, said driving method comprising the steps of:

applying a scanning selection signal comprising a former voltage signal of a first voltage and a latter voltage signal of a second voltage different from the first voltage to one of the scanning electrodes to select a particular scanning electrode;

applying data signals to the signal electrodes, each data signal comprising an information signal for selecting a display state of a picture element on the particular scanning electrode, each data signal having a waveform providing an AC voltage applied to intersections of scanning electrodes not supplied with the scanning selection signal and signal electrodes, the AC voltage including a plurality of first pulses each having a pulse width equal to that of the latter voltage signal, and a plurality of second pulses disposed before or after the first pulses and each having a pulse width shorter than that of the latter voltage signal;

whereby the picture elements on the particular scanning electrode supplied with the former voltage signal are non-selectively erased into one display state and a selected picture element on the particular scanning electrode supplied with the latter voltage signal is changed into the other display state depending on the selected information signal, and a non-selected picture element on the particular scanning electrode supplied with the latter voltage signal is held in the one display state.

5,703,615

METHOD FOR DRIVING MATRIX TYPE FLAT PANEL DISPLAY DEVICE

Yoshihisa Usami, Shizuoka, Japan, assignor to Fuji Photo Film Co., Ltd., Kanagawa, Japan

Continuation of Ser. No. 15,864, Feb. 10, 1993, abandoned. This application Jun. 1, 1995, Ser. No. 457,305

Claims priority, application Japan, Feb. 10, 1992, 4-057565; Feb. 10, 1992, 4-057566; Dec. 14, 1992, 4-352813

Int. Cl.[6] B09G *3/36*

U.S. Cl. 345—97 **14 Claims**

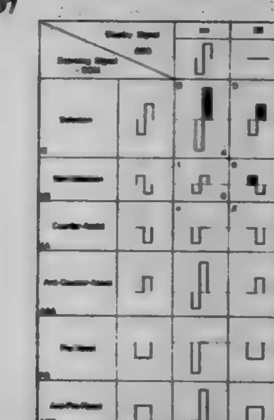

1. In a method for driving a matrix type flat panel display device wherein a row of scanning electrodes intersects a row of signal electrodes at an intersecting point,

wherein a bistable picture element is arranged at said intersecting point,

wherein a scanning signal is applied to said row of scanning electrodes and an ON or OFF display signal is applied to said row of signal electrodes,

wherein a drive signal is synthesized by a combination of said scanning signal and said ON or OFF display signal at said intersecting point, and

wherein said scanning signal comprises:

(1) a reset signal for resetting all said bistable picture elements along said row of scanning electrodes to one of a dark or bright state;

(2) a selection signal for setting a particular bistable picture element at a particular intersecting point on said row of

scanning electrodes to one of the bright or dark states from a reset state which has been reset by said reset signal;

(3) a non-selection signal following the selection signal, said non-selection signal keeping the state of said particular bistable picture element set by said selection signal,

(4) where a first part of said drive signal synthesized by a combination of said non-selection signal and said ON or OFF display signal has alternating positive and negative polarity pulses;

the improvement comprising the step of providing said scanning signal with an additional counter-assist signal which is applied immediately after said selection signal and before said non-selection signal;

said counter-assist signal having a waveform such that a second part of said drive signal synthesized by a combination of said counter-assist signal and said ON or OFF display signal has a polarity inverse to a polarity of an effective pulse,

said effective pulse being a third part of said drive signal synthesized by a combination of said selection signal and said ON or OFF display signal and which contributes to setting the particular bistable picture element to one of the bright or dark states; and

a first time period of said counter-assist signal overlapping a second time period of a respective next selection signal for a respective next row of scanning electrodes.

5,703,616

DISPLAY DRIVING DEVICE

Kazuhiro Kawasugi, Oome, Japan, assignor to Casio Computer Co., Ltd., Tokyo, Japan

Division of Ser. No. 238,254, May 4, 1994, abandoned. This application Apr. 25, 1995, Ser. No. 428,269

Claims priority, application Japan, May 13, 1993, 5-111830

Int. Cl.⁶ G09G *5/36*

U.S. Cl. 345—98 **7 Claims**

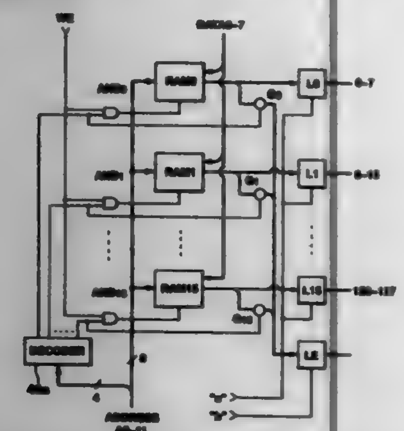

1. A display data storing device in which a memory area is specified by an X address and a Y address, said display data storing device comprising:

a plurality of memories of a number which can be specified by the X address, said plurality of memories storing display data;

an address supply device for supplying the Y address to said plurality of memories;

a selector for selecting one of said plurality of memories according to the X address;

a write-in device for specifying one of said plurality of memories by the X address and the Y address, and for writing data into said specified memory;

a readout device for specifying all of said plurality of memories by the Y address to simultaneously read out data from said plurality of memories;

a plurality of latch circuits for respectively storing output data items read out from said plurality of memories;

a latch circuit for selectively storing one of the output data items read out from said plurality of memories; and

a switching circuit for selecting one of said plurality of latch circuits and said latch circuit to store data.

5,703,617

SIGNAL DRIVER CIRCUIT FOR LIQUID CRYSTAL DISPLAYS

Michael J. Callahan, Jr., and Christopher A. Ludden, both of Austin, Tex., assignors to Crystal Semiconductor, Austin, Tex.

Continuation-in-part of Ser. No. 138,366, Oct. 18, 1993, Pat. No. 5,574,475. This application May 9, 1994, Ser. No. 240,026

Int. Cl.⁶ G09G *3/36*

U.S. Cl. 345—98 **21 Claims**

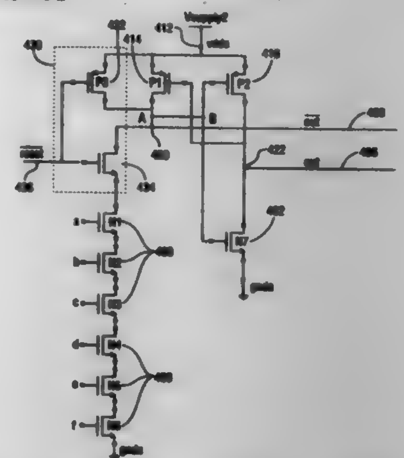

1. A signal driver circuit for driving an LCD panel, said circuit providing analog voltages to LCD panel columns, comprising:

a plurality of data input lines, said plurality of data input lines comprising most siginticant data input lines and least significant data input lines, data on said data input lines digitally representing an analog voltage level to be applied to said LCD panel columns;

a plurality of driver output lines for providing said analog voltages to said LCD panel, a plurality of said data input lines being associated with each said driver output line;

a plurality of decoder cells connected to said plurality of data input lines, each of said decoder cells receiving data from a plurality of said data input lines, said decoder cells comprising:

a plurality of most significant input transistors connected to said most significant data input lines, and

a plurality of least significant input transistors connected to said least significant data input lines; and

a plurality of switches connected to said plurality of decoder cells for switching one of said analog voltage levels to said driver output lines,

wherein at least two of said plurality of decoder cells share said plurality of most significant input transistors.

5,703,618

METHOD AND APPARATUS FOR UPSCALING VIDEO IMAGES WHEN PIXEL DATA USED FOR UPSCALING A SOURCE VIDEO IMAGE ARE UNAVAILABLE

Alexander Julian Eglit, Half Moon Bay, Calif., assignor to Cirrus Logic, Inc., Fremont, Calif.

Filed Nov. 22, 1995, Ser. No. 561,907

Int. Cl.⁶ G06K *9/36;* **G09G** *5/00*

U.S. Cl. 345—112 **18 Claims**

1. A graphics controller circuit for upscaling a source video image to generate an upscaled video image, wherein the source video image comprises at least a one scan line and an another scan line represented by a set of source video pixel data, said graphics controller circuit comprising:

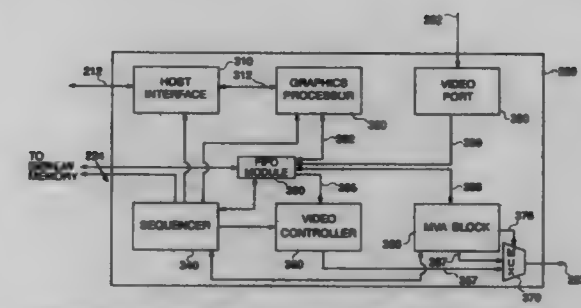

an interpolator generating a set of additional pixel data comprised in the upscaled video image by interpolating the source video pixel data of the one scan line and the another scan line;

a first circuit for determining a condition in which at least one of the source video pixel data of the another scan line are unavailable for interpolation by said interpolator; and

a control circuit to cause said interpolator to generate the set of additional pixel data from the source video pixel data of only the one scan line when the source video pixel data of the another scan line are unavailable.

5,703,619

Patent Not Issued For This Number

5,703,620

CURSOR/POINTER SPEED CONTROL BASED ON DIRECTIONAL RELATION TO TARGET OBJECTS

David V. Keyson, Eindhoven, Netherlands, assignor to U.S. Philips Corporation, New York, N.Y.

Filed Oct. 26, 1995, Ser. No. 548,934

Claims priority, application European Pat. Off., Apr. 28, 1995, 95201106

Int. Cl.⁶ G06F *3/033*

U.S. Cl. 345—145 **8 Claims**

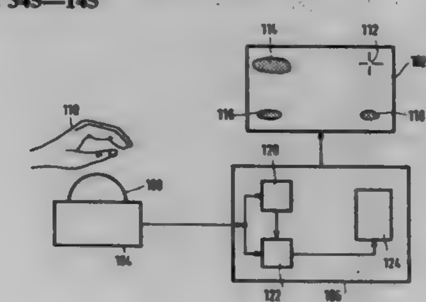

100

1. An information processing system comprising:

a display for visualizing a virtual space;

a manual input device coupled to the display and having a moveable part for enabling a user to guide a cursor through the virtual space in response to the user actuating the moveable part; wherein

the system is operative to decrease an amount of movement of the moveable part, required to move the cursor a unit distance, below a pre-specified level when the cursor is within a target area in the virtual space and is moving towards a centre of the target area and to increase the amount above the level when the cursor is within the target area and is moving away from the centre.

5,703,621

UNIVERSAL DISPLAY THAT PRESENTS ALL IMAGE TYPES WITH HIGH IMAGE FIDELITY

Russel A. Martin, Menlo Park; Richard H. Bruce, Los Altos; Victor M. DaCosta, San Carlos; Thomas G. Fiske, Campbell; Alan G. Lewis, Sunnyvale, all of Calif.; Louis D. Silverstein, Scottsdale, Ariz.; Hugo L. Steemers; Malcolm J. Thompson, both of Palo Alto, Calif., and William D. Turner, San Marino, Calif., assignors to Xerox Corporation, Stamford, Conn.

Continuation of Ser. No. 235,015, Apr. 28, 1994, abandoned. This application Jul. 12, 1996, Ser. No. 679,168

Int. Cl.⁶ G09G *5/10*

U.S. Cl. 345—147 **32 Claims**

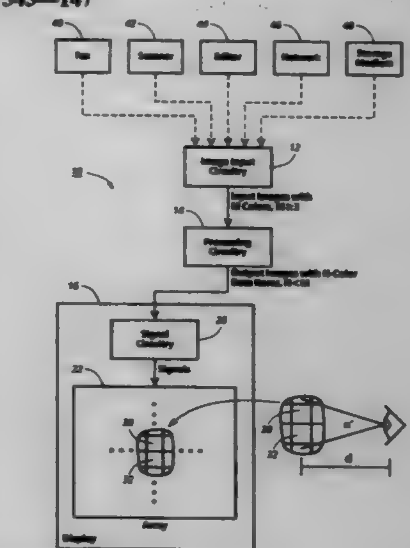

1. A product comprising:

image input circuitry for providing data defining input images; the image input circuitry being able to provide data indicating M colors, where M is three or more;

display circuitry; the display circuitry including:

an array of light control units extending in first and second directions, the second direction being perpendicular to the first direction, for presenting images, the array having an area large enough to present images for direct viewing; each light control unit being structured to receive a signal and to respond to its signal by causing presentation of an image segment with one of a set of N colors, where N is less than M; the light control units having a density of greater than 100/cm in both the first and second directions so that artifacts that are visible only up to spatial frequencies of approximately 60 cycles per degree of visual angle are not noticeable in presented images when the array is directly viewed at usual viewing distances by a human with normal vision; and

signal circuitry for providing signals to the light control units in response to data defining output images; and

processing circuitry connected for receiving data defining input images from the image input circuitry and for providing data defining output images to the signal circuitry; the processing circuitry being operable to

receive input image data from the image input circuitry; the input image data defining an input image that includes M colors;

use the input image data to obtain output image data; the output image data defining an output image that is a version of the input image; the output image data including, for each light control unit in the array, a color data item that indicates one of the light control unit's set of N colors; and

provide the output image data to the signal circuitry;

the signal circuitry responding to the output image data from the processing circuitry by providing signals to the light control units for changing the light control units between a maximum intensity and a minimum intensity, so that each light control unit presents an image segment with the color indicated by the light control unit's

color data item; the array of light control units together presenting the output image so that the appearance of the output image to a human with normal vision directly viewing the array at usual viewing distances is substantially identical to the appearance the input image would have if presented.

5,703,622
METHOD FOR IDENTIFYING VIDEO PIXEL DATA FORMAT IN A MIXED FORMAT DATA STREAM
Edward Kelley Evans, Essex Junction, and Roderick Michael Peters West, Colchester, both of Vt., assignors to International Business Machines Corporation, Armonk, N.Y.
Filed Jan. 30, 1995, Ser. No. 380,763
Int. Cl.⁶ G09G *5/04*
U.S. Cl. 345—154 **6 Claims**

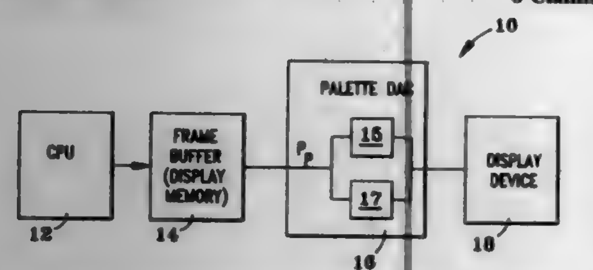

1. A method for identifying the format of video pixel data in a data stream, the data stream comprising video pixel data having at least a first pixel data format and a second pixel data format, the second pixel data format being a YUV format, the method comprising the steps of:
a) receiving pixel data;
b) selecting an output channel in response to at least one particular value of at least one bit of each said received pixel datum wherein the particular value identifies the data format as one of the first pixel data format and the YUV format; and
c) providing said pixel data to said selected output channel, wherein the first pixel data format is a 555 RGB format, and the YUV format is a modified 4:2:2 YUV format having a reduced number of chrominance bits as compared to a conventional 4:2:2 YUV format and wherein bits 0 to 6 represent chrominance, bits 7 through 14 represent luminance, and bit 15 represents the particular value identifying the data format.

5,703,623
SMART ORIENTATION SENSING CIRCUIT FOR REMOTE CONTROL
Malcolm G. Hall, 7901 Queenair Dr. #104, and Russell W. Faulkner, 7901 Queenair Dr., both of Gaithersburg, Md. 20879
Filed Jan. 24, 1996, Ser. No. 590,513
Int. Cl.⁶ G09G *5/08*
U.S. Cl. 345—158 **18 Claims**

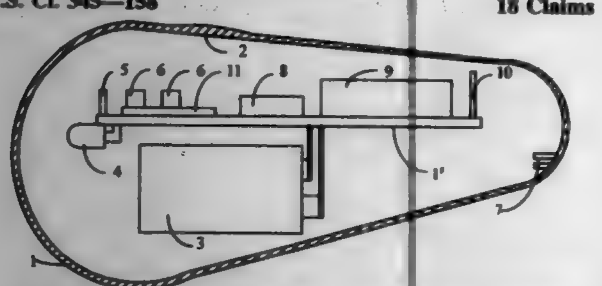

1. In combination, a handheld, freespace, remote mouse utilizing a fusion of both Hall effect and piezoelectric effect solid state sensor technologies devices, for remotely pointing, then controlling a 3D virtual object's orientation and/or determining the device's own absolute orientation, thereby determining the orientation and direction of operatively associated physical objects.

5,703,624
PORTABLE IMAGE VIEWER
Timothy van Kralstum, 19 Washington St., Paris, Ontario, Canada, N3L 2A2
Filed Feb. 9, 1996, Ser. No. 599,303
Int. Cl.⁶ G09G *5/00*
U.S. Cl. 345—169 **3 Claims**

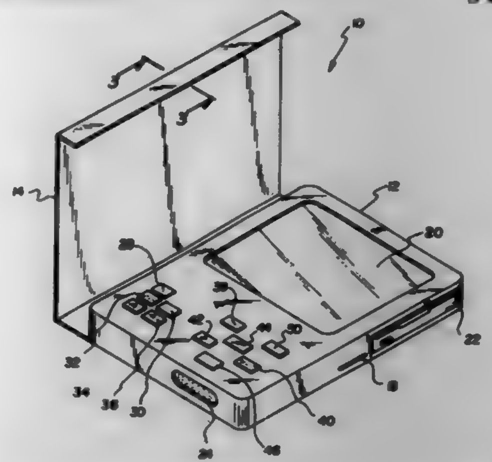

1. A new and improved portable image viewer comprising, in combination:
a generally rectangular compact housing with a top surface, a lower surface, and a periphery formed therebetween defining an interior space, the housing comprising a cover with a size corresponding to that of the top surface and having a first end hingably coupled to a first side edge of the housing and further having a protrusion formed on a second end thereof for releasably coupling with a detent formed in a second side edge of the housing for selectively protecting the top surface of the housing;
a liquid crystal display situated on the top surface of the housing;
a standard floppy disk drive having a receiving aperture for accepting a non-volatile floppy disk and extracting data therefrom;
an input port for accepting data from a conventional computer; and
hardware based control circuitry situated within the housing and connected to the display and the floppy disk drive, the control circuitry in a first mode adapted to actuate upon the depression of a power key, to depict on the display a file directory containing files existent on the floppy disk upon the insertion of the floppy disk into the disk drive and depression of a file key, to designate and select a directory upon the depression of a pair of scroll keys and a select key respectively, to designate and select a file upon the depression of the pair of scroll keys and the select key respectively, to determine lower left extent coordinates and upper right extent coordinates of the file, to configure the display coordinates so as to accommodate the lower left extent coordinates and the upper right extent coordinates of the file, and to output the file on the display as an image for viewing by a user; the control circuitry in a second mode adapted to actuate upon the depression of the power key, to accept a file via the input port, to determine lower left extent coordinates and upper right extent coordinates of the file, to configure the display coordinates so as to accommodate the lower left extent coordinates and the upper right extent coordinates of the file, and to output the file on the display as an image for viewing by the user; upon the output of the file on the display, the control circuitry in both the first mode and second mode further adapted to enlarge the image upon the depression of a zoom in key; upon the image being enlarged, the control circuitry adapted to pan right on the image upon the depression of a right key, to pan left on the image upon the depression of a left key, to pan up on the image upon the depression of an up key, to pan down on the image upon the depression of a down key, and to zoom out on the image upon the depression of a zoom out key.

5,703,625
ILLUMINATED PUSH BUTTON DISPLAY
Chris Ralph Snider, and Kerwin Craig Osman, both of Kokomo, Ind., assignors to Delco Electronics Corporation
Continuation of Ser. No. 369,627, Jan. 6, 1995, abandoned. This application Oct. 10, 1996, Ser. No. 728,578
Int. Cl.⁶ G09G *5/00*
U.S. Cl. 345—168 **18 Claims**

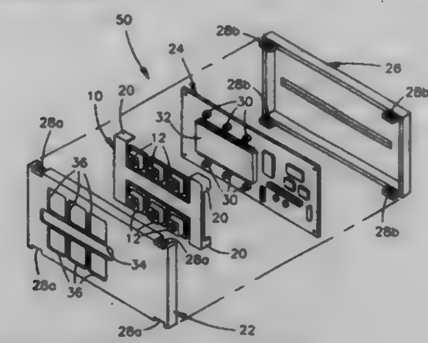

6. A backlit graphic display comprising:
an illuminated display for generating graphics;
a switch disposed adjacent the illuminated display;
an integral member disposed in proximity to the illuminated display, the integral member being a unitary integrally-formed body of an optically conductive material and comprising a lens member and a button member pivotably cantilevered from the lens member, the integral member being positioned relative to the illuminated display and the switch such that the graphics generated by the illuminated display is visible through the lens member and such that pivoting of the button member relative to the lens member actuates the switch; and
a housing having apertures formed therein, the integral member being disposed between the illuminated display and the housing such that the graphics generated by the illuminated display are visible through the apertures.

5,703,626
PORTABLE ELECTRIC APPARATUS USING A PEN MEMBER FOR INPUTTING INFORMATION
Masashi Itoh, Hadano, and Yasutaka Koga, Kanagawa, both of Japan, assignors to Ricoh Company, Ltd., Tokyo, Japan
Filed May 6, 1996, Ser. No. 642,943
Claims priority, application Japan, May 15, 1995, 7-115885
Int. Cl.⁶ G09G *5/00*
U.S. Cl. 345—173 **8 Claims**

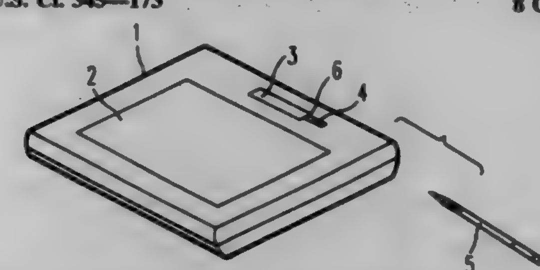

1. A portable electric apparatus processing input information and displaying results of said information processing, which comprises:
a panel member displaying processing results and information for said portable electric apparatus;
a pen member inputting said information to said panel member;
a storage member located on a surface of said portable electric apparatus, said storage member storing said pen member therein wherein said storage member has a guide rail guiding said pen member; and
a holding member holding said pen member on the surface of the portable electric apparatus.

5,703,627
METHOD FOR COLORFLASH REDUCTION BY COPYING COLOR VALUES BETWEEN ACTIVE AND INACTIVE WINDOW APPLICATIONS SO AS TO MINIMIZE DIFFERING COLOR CELLS BETWEEN CORRESPONDING COLOR MAPS
James A. Young, San Jose, Calif., assignor to Apple Computer, Inc., Cupertino, Calif.
Continuation of Ser. No. 400,974, Mar. 8, 1995, abandoned. This application Jun. 27, 1996, Ser. No. 670,537
Int. Cl.⁶ G09G *5/06*
U.S. Cl. 345—199 **15 Claims**

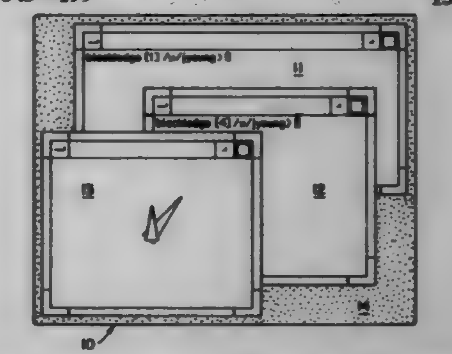

1. A method for reducing color flashing when changing color focus between first and second colormaps in a computer system having a screen and a means for storing sets of color values, said computer system displaying a first area in said screen corresponding to a first application, said first application employing said first colormap, said screen also displaying a second area corresponding to a second application, said second application employing said second colormap, said first colormap having a first set of color values with associated index locations and said second colormap having a second set of color values with said associated index locations, said method comprising the steps of:
1) identifying allocatable index locations in said first colormap's associated index locations;
2) changing said identified allocatable index locations to temporarily allocated index locations;
3) copying color values having corresponding index locations as said temporarily allocated index locations from said second colormap into said allocated index locations of said first colormap so as to minimize differences between said first and second colormaps wherein said first colormap comprises said copied color values from said second colormap and a portion of said first set of color values;
4) changing said temporarily allocated index locations to allocatable index locations in said first colormap.

5,703,628
IMAGE DATA STORE DEVICE
Kiyoharu Nishiyama, Tokyo, Japan, assignor to Ricoh Company, Ltd., Tokyo, Japan
Filed Aug. 12, 1994, Ser. No. 288,716
Claims priority, application Japan, Aug. 16, 1993, 5-202314
Int. Cl.⁶ G09G *5/00*
U.S. Cl. 345—202 **14 Claims**

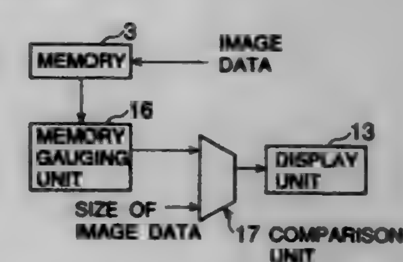

1. An image data store device, used in a video printer, for receiving, sampling and storing image data in a memory, comprising:

a) memory gauging means for gauging an amount of unused space remaining in said memory based on a sampling clock for sampling said image data;
b) comparison means for (b1) making a comparison of:
1) said amount of said unused space with
2) a memory volume needed to store one image in said memory;
and for (b2) providing information on said comparison; and
c) display means for displaying said information on said comparison so as to indicate whether said image data store device can store one image in said memory.

5,703,629
COMPUTER SYSTEM INCLUDING PROTECTED GRAPHICS DISPLAY CONTROL SIGNAL SEQUENCING
Lois D. Mermelstein, and Kendall C. Witte, both of Austin, Tex., assignors to Dell USA, L.P., Round Rock, Tex.
Filed Jun. 8, 1995, Ser. No. 489,011
Int. Cl.^{6} G06F *13/10*
U.S. Cl. 345—213 **16 Claims**

1. An information handling system comprising:
a processor;
a main memory coupled to the processor;
a graphics controller coupled to the processor, the graphics controller supplying clock signals, data signals and an enable signal;
a display;
a switching apparatus switchably coupling the display to the graphics controller; and
a microcontroller coupled to the graphics controller, the switching apparatus and to the display, the microcontroller monitoring for a first transition in the enable signal, the microcontroller generating a first sequence of display control signals to power-up the display when the microcontroller detects the first transition in the enable signal, the microcontroller activating the switching apparatus to a coupling state to permit transmission of the clock signals and data signals from the graphics controller to the display after the microcontroller detects the first transition in the enable signal.

5,703,630
INK JET HEAD MANUFACTURING METHOD USING ION MACHINING AND INK JET HEAD MANUFACTURED THEREBY
Keiichi Murakami; Tadayoshi Inamoto, both of Hachiohji; Hirokazu Komuro, Yokohama; Hideaki Mashio, Kawasaki, and Toshio Suzuki, Inagi, all of Japan, assignors to Canon Kabushiki Kaisha, Tokyo, Japan
Continuation of Ser. No. 350,107, Nov. 29, 1994, abandoned, which is a division of Ser. No. 113,803, Aug. 31, 1993, abandoned. This application Dec. 2, 1996, Ser. No. 758,466
Claims priority, application Japan, Aug. 31, 1992, 4-232054; Aug. 31, 1992, 4-232055; Aug. 31, 1992, 4-232056; Aug. 31, 1992, 4-232057
Int. Cl.^{6} B41J *2/14;2/16*
U.S. Cl. 347—45 **21 Claims**

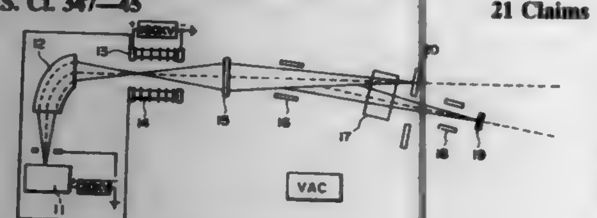

1. An ink jet head comprising:
a base member having an ejection surface;
an ejection outlet, formed in said ejection surface, for ejecting an ink; and
an ejection energy generating element for generating energy for ejecting the ink,
wherein said ejection surface is given a water-repellant property by ion implantation with a plurality of ions, wherein the ions includes F^+.

5,703,631
METHOD OF FORMING AN ORIFICE ARRAY FOR A HIGH DENSITY INK JET PRINTHEAD
Donald J. Hayes, and W. Royall Cox, both of Plano, Tex., assignors to Compaq Computer Corporation, Houston, Tex.
Filed May 5, 1992, Ser. No. 878,463
Int. Cl.^{6} B41J *2/14;* **B23K** *26/00*
U.S. Cl. 347—47 **31 Claims**

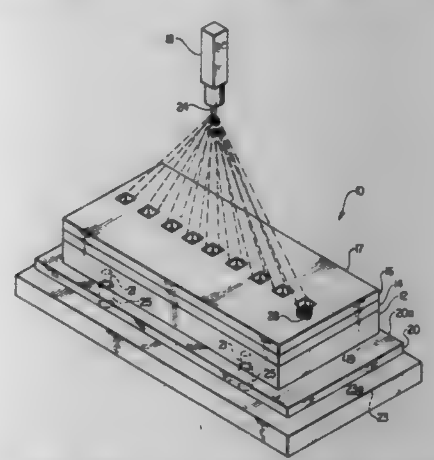

28. A method of forming an ink jet printhead, comprising the steps of:
providing a main body portion having a front end and at least one ink-carrying channel axially extending through said main body portion and in communication with said front end;
providing a cover plate having front and back surfaces;
forming, in said cover plate, an ink-ejecting orifice corresponding to each of said at least one ink-carrying channel, said orifice comprising an indentation into said back surface, said indentation exposing an interior surface of said cover plate, and an aperture having a smaller cross-sectional area than said indentation, said aperture extending from a portion of said exposed interior surface to said front surface of said cover plate; and
mounting said cover plate to said main body portion such that each of said at least one ink-carrying channel is in communication with said corresponding ink-ejecting orifice.

5,703,632
INK JET HEAD ORIFICE PLATE MOUNTING ARRANGEMENT
Teruo Arashima, Yokohama; Makiko Kimura, Sagamihara; Toshio Kashino, Chigasaki; Hiroshi Sugitani, Machida; Yoshifumi Hattori, Yamato; Masami Ikeda, Tokyo; Asao Saito, Yokohama; Kazuaki Masuda, Sagamihara; Akio Saito, Hadano, and Tsuyoshi Orikasa, Kasukabe, all of Japan, assignors to Canon Kabushiki Kaisha, Tokyo, Japan
Continuation of Ser. No. 641,697, May 2, 1996, abandoned, which is a continuation of Ser. No. 385,367, Feb. 7, 1995, abandoned, which is a continuation of Ser. No. 983,695, Dec. 1, 1992, abandoned, which is a division of Ser. No. 905,234, Jun. 29, 1992, Pat. No. 5,189,443, which is a continuation of Ser. No. 583,565, Sep. 17, 1990, abandoned. This application Dec. 9, 1996, Ser. No. 762,239
Claims priority, application Japan, Sep. 18, 1989, 241026
Int. Cl.^{6} B41J *2/14;2/145;2/05*
U.S. Cl. 347—47 **6 Claims**

1. A method of manufacturing an ink jet head, comprising the steps of:

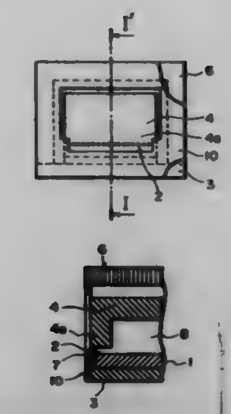

providing a passage-forming member having a plurality of ink passages, an orifice plate having an array of ejection outlets in liquid communication with respective said ink passages, wherein said orifice plate has a plurality of edge portions and said ejection outlets are arranged along a line that runs parallel to at least one of said edge portions and intersects opposing said edge portions at crossing points, and a confining member for holding said orifice plate against said passage-forming member; and
holding said orifice plate against said passage-forming member with said confining member only along one confined edge portion parallel to and proximate to said line and at corner portions of said orifice plate, each said corner portion extending along an edge portion from an extremity of said confined edge portion approximately to one of said crossing points.

5,703,633
INK CONTAINER WITH A CAPILLARY ACTION MEMBER
Udo Gehrer; Rolf Gibbels, both of Wuerselen, and Heinz-Josef Frenken, Stolberg, all of Germany, assignors to Dia Nielsen GmbH Zubehoer fuer Messtechnik, Dueren, Germany
Filed Aug. 19, 1994, Ser. No. 292,888
Claims priority, application Germany, Aug. 20, 1993, 43 28 001.3
Int. Cl.^{6} B41J *2/175*
U.S. Cl. 347—86 **12 Claims**

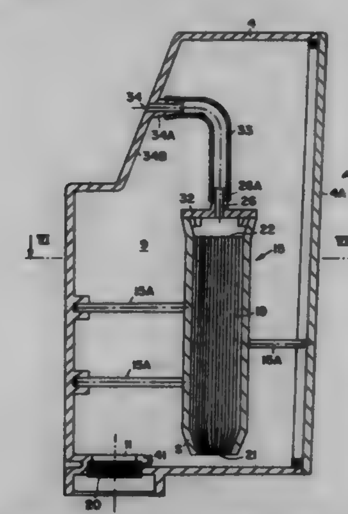

1. An ink container for dispensing ink comprising an ink container forming a reservoir for containing ink in said reservoir, an ink withdrawal opening, a capillary coupling member for closing said withdrawal opening, a chamber including a vent to atmosphere and an open end, a capillary body in said chamber, said capillary body having a first capillarity, said capillary body further having a first end and a second end and at least one squeezed section beginning at said first end and extending lengthwise of said capillary body, said capillary coupling member for closing said ink withdrawal opening having a second capillarity larger than said first capillarity of said capillary body for preventing entry of air into said ink reservoir through said coupling member, said chamber having the capillary body being arranged inside said ink container so that said first end of said capillary body faces said open end of said chamber for direct contact with ink in said ink reservoir and so that said second end of said capillary body communicates through said vent with the atmosphere, said chamber enclosing said capillary body so that air can enter into said ink reservoir only through capillary ducts in said capillary body and contact between said capillary coupling member and said capillary body is avoided.

5,703,634

Patent Not Issued For This Number

5,703,635
THERMAL TRANSFER COLOR RECORDING DEVICE
Naotaka Sasaki, Kiryu; Kenju Sugaya, Maebashi, and Fumio Nakahashi, Ibaraki-ken, all of Japan, assignors to Japan Servo Co., Ltd., Tokyo, Japan
Continuation of Ser. No. 204,444, Mar. 2, 1994, abandoned. This application Sep. 30, 1996, Ser. No. 722,938
Claims priority, application Japan, Mar. 8, 1993, 5-070771
Int. Cl.^{6} B41J *2/325;2/32*
U.S. Cl. 347—176 **2 Claims**

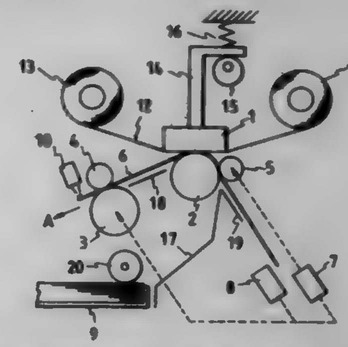

1. A thermal transfer color recording device comprising:
a recording portion for effecting thermal transfer color recording, said recording portion including a platen roller and a thermal head, said thermal head having a plurality of rectilinear heating elements, means for moving said thermal head to selectively press said platen roller to clamp and convey an ink sheet, on which ink of two or more colors is applied respectively on areas nearly equal to or larger than desired recording areas, and a recording paper, between said thermal head and said platen roller;
a grip roller and a resiliently biased pinch roller located downstream from the recording portion in the recording direction of the recording paper, said grip roller having minute projections on its surface for clamping and conveying the recording paper between the grip roller and the resiliently biased pinch roller;
means for rotating the grip roller in a clockwise or counter-clockwise rotation, whereby counter-clockwise rotation of the grip roller conveys the recording paper in the recording direction;
means for conveying said ink sheet between said thermal head and said platen roller so that ink of two or more colors can be applied to said recording paper as the recording paper is conveyed by the grip roller;
an auxiliary roller located upstream from the recording portion in the recording direction of the recording paper for clamping and conveying the recording paper between the auxiliary roller and the platen roller;

first transmitting means for transmitting the rotation of the grip roller to the auxiliary roller at a reduced rate in the recording direction of the recording paper; and
second transmitting means for transmitting the rotation of the grip roller to the platen roller at an increased rate in the direction opposite the recording direction of the recording paper.

5,703,636
HIGH RESOLUTION OPTICAL COMMUNICATION SYSTEM
Carmine Cifaldi, 360 Union Ave., Patterson, N.J. 07505
Filed May 14, 1996, Ser. No. 645,742
Int. Cl.⁶ H04M *11/00;* **H04B** *9/00;* **H04N** *7/12*
U.S. Cl. 348—14 **11 Claims**

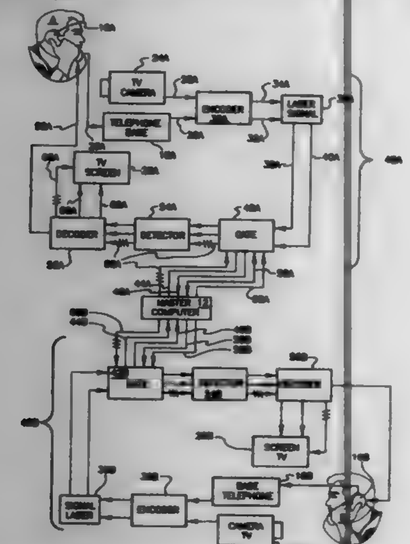

1. A communications system enabling bidirectional audible and visual communication between at least two remotely located users, said communications system comprising:
a plurality of user units, one said user unit serving the premises of one user;
a central computer for controlling and coordinating bidirectional audible and visual communication established between any two users, having means for generating horizontal yoke control signals and transmitting said horizontal yoke control signals to each user unit, means for generating vertical yoke control signals and transmitting said horizontal yoke control signals to each user unit, and focus coil means control signals and transmitting said focus coil means control signals to each user unit; and
a network of optical fiber cables linking each said user unit to said central computer,
each user unit further comprising
a telephone having a microphone, a speaker, and means for generating first analog signals corresponding to sounds detected by said microphone,
a television camera having means for generating second analog signals corresponding to visual images detected by said television camera,
a cathode ray tube having means for generating a visual image responsive to video signals, horizontal yoke, vertical yoke, and focus coil means,
an encoder connected to said telephone and to said television camera, having means for converting said first analog signals and said second analog signals into corresponding first digital audio signals and second digital video signals,
an optical signal generator connected to said encoder, having means for generating optical signals corresponding to said first digital signals and said second digital signals, said optical signal generator operably connected to said network of optical fiber cables,
an optical signal detector and decoder having means for receiving incoming optical signals and converting said incoming optical signals into audio signals usable by said speaker of said telephone to reproduce transmitted sounds and video signals usable by said cathode ray tube to reproduce transmitted images, said detector and decoder also having means for connecting said optical signals and said audio signals to said telephone and to said cathode ray tube, and means for connecting said horizontal yoke control signals, said vertical yoke control signals, and said focus coil means control signals to said cathode ray tube.

5,703,637
RETINA DIRECT DISPLAY DEVICE AND TELEVISION RECEIVER USING THE SAME
Shigeyuki Miyazaki; Hiroshi Yokokawa, and Yuichi Ninomiya, all of Tokyo, Japan, assignors to Kinseki Limited, and Nippon Hoso Kyokai, both of Japan
Filed Oct. 26, 1994, Ser. No. 328,647
Claims priority, application Japan, Oct. 27, 1993, 5-268864
Int. Cl.⁶ H04N *9/31*
U.S. Cl. 348—53 **16 Claims**

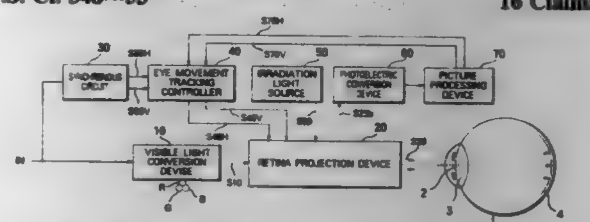

1. A retina direct display device comprising:
a visible light conversion means for converting a video signal including a horizontal synchronous signal and a vertical synchronous signal into a beam of visible light;
a retina projection means having:
a two-dimensional scanning means for deflecting the beam which is converted by the visible light conversion means in horizontal and vertical directions in response to a horizontal deflection signal and a vertical deflection signal, and
an optical system for projecting a beam of visible light which is deflected by the two-dimensional scanning means on both eyes of a viewer so that retinas are raster scanned through pupils of the both eyes by the projected beam; and
an eye movement tracking means having
a synchronous circuit for extracting the horizontal synchronous signal and the vertical synchronous signal included in the video signal,
a photoelectric conversion device for converting a reflection light beam or an irradiation light beam which is sent from the eye side of one of or both of the right and left eye into an electric signal,
a picture processing device for comparing an image data of one of or both of the right and left pupil of the present frame and an image data of the pupil of one previous frame in response to the electric signal which is converted by the photoelectric conversion device and detecting the direction and quantity of the movement of the pupil and then outputting horizontal and vertical movement detection signals of the pupil, and
an eye movement tracking controller for outputting the horizontal deflection signal and vertical deflection signal to the retina projection means in response to the horizontal synchronous signal and vertical synchronous signal which is extracted by the synchronous circuit and the movement detection signals output from the picture processing device and permitting the direction of the beam emitted from the retina projection means to track the movement of the pupil; and
said visible light conversion means, retina projection means and eye movement tracking means being disposed at a position remote from the viewer at a given interval.

5,703,638
IMAGE PICKUP APPARATUS FOR MOVING IMAGE PHOTOGRAPHING OR FOR STILL IMAGE PHOTOGRAPHING
Seiya Ohta; Kitahiro Kaneda; Hirofumi Takei, and Taeko Tanaka, all of Kanagawa-ken, Japan, assignors to Canon Kabushiki Kaisha, Tokyo, Japan
Continuation of Ser. No. 948,001, Sep. 21, 1992, abandoned. This application Dec. 8, 1994, Ser. No. 351,740
Claims priority, application Japan, Sep. 25, 1991, 3-245692; Oct. 21, 1991, 3-272627; Nov. 8, 1991, 3-293238; Jan. 21, 1992, 4-008654; Jan. 28, 1992, 4-012936
Int. Cl.⁶ H04N *5/225;5/232;5/238;* **G03B** *13/00*
U.S. Cl. 348—220 **16 Claims**

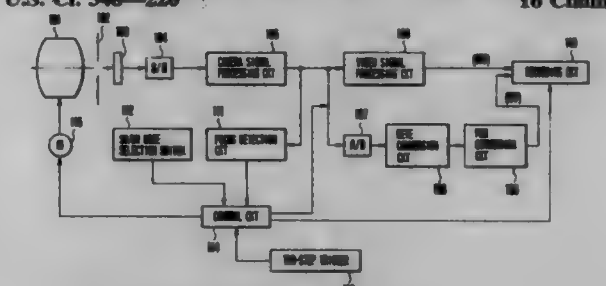

1. An image pickup apparatus comprising:
a) image pickup means for converting image light obtained from an object into an electrical signal;
b) instructing means for giving an instruction for moving image shooting or for still image shooting;
c) driving-control means for driving-control over the moving image shooting and the still image shooting with predetermined different control characteristics, said driving-control means having focus control means;
d) setting means for setting the different control characteristics of said focus control means according to the instruction of said instruction means; and
e) control means for controlling said setting means to change said control characteristics of said focus control means according to the shooting mode set by said setting means and for executing a still image shooting operation after stopping said focus control means if focus control means is being driven when an instruction for still image shooting is made by said instruction means.

5,703,639
CHARGE COUPLED DEVICE PULSE DISCRIMINATOR
Michael G. Farrier, Redwood Shores, Calif.; Stacy R. Kamasz, Waterloo; Fred S. F. Ma, Scarborough, both of Canada, and Mark P. Bendett, Ann Arbor, Mich., assignors to Dalsa, Inc., Waterloo, Canada, and Imra America, Inc., Ann Arbor, Mich.
Filed Oct. 25, 1994, Ser. No. 328,923
Int. Cl.⁶ H04N *5/335*
U.S. Cl. 348—241 **15 Claims**

1. Apparatus for detecting light energy comprising:
means for accumulating a first photocharge from a pulse of light energy incident on the accumulating means during a first sample time, and for accumulating a second photocharge from background illumination during a second sample time, said accumulated first photocharge including said light energy pulse superimposed on said background illumination, with said accumulated first photocharge being transferred to a storage element of said accumulating means upon completion of said first sample time, and said accumulated second photocharge being transferred to said storage element of said accumulating means upon completion of said second sample time;
means for storing said first photocharge accumulated during said first sample time and for storing said second photocharge accumulated during said second sample time;
means for controlling exposure of the accumulating means to said light energy pulse by enabling said accumulating means to detect said light energy pulse in response to detected emission of said light energy pulse; and
means for generating a differential output proportional to a difference between said first photocharge and said second photocharge.

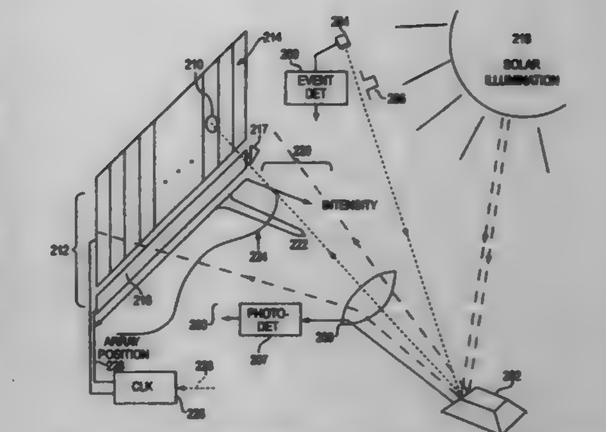

5,703,640
COLOR LINEAR IMAGE SENSOR HAVING A REDUCED DISTANCE BETWEEN PHOTOSENSOR ARRAYS
Kazuo Miwada, Tokyo, Japan, assignor to NEC Corporation, Tokyo, Japan
Continuation of Ser. No. 534,307, Sep. 27, 1995, Pat. No. 5,631,702, which is a continuation of Ser. No. 184,929, Jan. 24, 1994, abandoned. This application Oct. 28, 1996, Ser. No. 739,041
Claims priority, application Japan, Jan. 22, 1993, 5-8727
Int. Cl.⁶ H04N *3/14*
U.S. Cl. 348—272 **2 Claims**

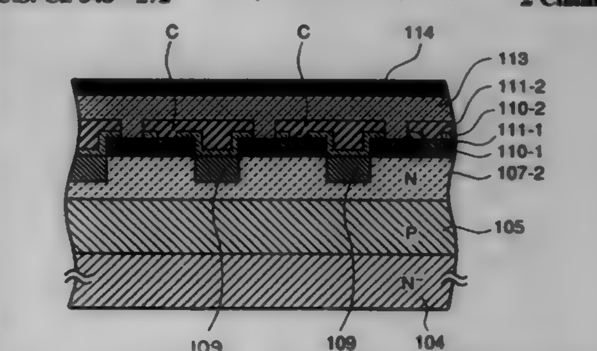

1. A color linear image sensor apparatus including three linear image sensors which are integrated in parallel to each other on the same semiconductor chip, each of said linear image sensors having a color sensitivity different from each other,
each of the linear image sensors including:
a photocell array composed of a plurality of photocells arranged in the form of a single array and channel stoppers which isolate adjacent photocells of each of said linear image sensors from each other;
a CCD register for receiving an electric charge from said photocell array and transferring the received electric charge therethrough, the CCD register being composed of a plurality of first and second transfer gate electrodes alternately connected to a plurality of wiring conductors, said first transfer gate electrodes being formed of a first level polysilicon film, said second transfer gate electrodes being formed of a second level polysilicon film formed above the first level polysilicon film;
an insulating film formed above said first and second transfer gate electrodes and said channel stoppers;
each of said wiring conductors interconnecting the corresponding first transfer gate electrodes of each of said three

linear image sensors, each of said wiring conductors being formed through said insulating film, and each of said wiring conductors being formed of the first level polysilicon film, thereby forming extensions of said first transfer gate electrodes above said channel stoppers, said second transfer gate electrodes having only partial extensions above said channel stoppers, interconnecting said second transfer gate electrodes of said three linear image sensors; and

means for connecting each of said second transfer gate electrodes to a corresponding one of said first transfer gate electrodes.

5,703,641

SOLID-STATE COLOR IMAGE PICKUP DEVICE FOR REPRODUCING A COLOR IMAGE

Tohru Watanabe, Ogaki, Japan, assignor to Sanyo Electric Co., Ltd., Osaka, Japan

Filed Mar. 31, 1995, Ser. No. 414,756

Claims priority, application Japan, Mar. 31, 1994, 6-063383; Nov. 14, 1994, 6-279229

Int. Cl.[6] H04N *9/07*

U.S. Cl. 348—274 **20 Claims**

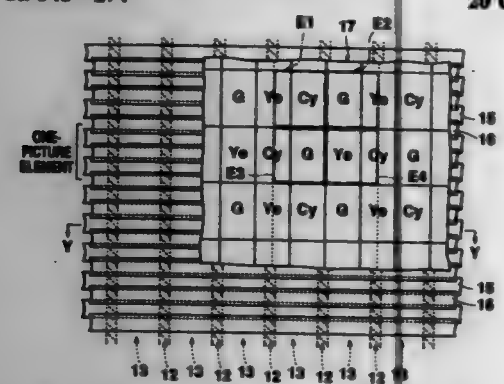

1. A solid-state color image pickup device comprising:

a substrate;

a plurality of light-receiving picture elements arranged in a matrix on a surface of said substrate; and

a color filter disposed to cover said plurality of light-receiving picture elements, said color filter including filter elements which have one-to-one correspondence to said light-receiving picture elements, wherein said filter elements include a first filter element and a second filter element disposed in odd-numbered rows so as to pass light having a first color component and light having a second color component, respectively, and a third filter element and a fourth filter element disposed in even-numbered rows so as to pass light having a third color component and light having a fourth color component, respectively, all of said filter elements passing light having color components which satisfies the following conditions:

a sum of a light-receiving signal obtained from a light-receiving picture element which corresponds to said first filter element on the basis of said light having said first color component and a light-receiving signal obtained from a light-receiving picture element which corresponds to said second filter element on the basis of said light having said second color component is equal to a sum of a light-receiving signal obtained from a light-receiving picture element which corresponds to said third filter element on the basis of said light having said third color component and a light-receiving signal obtained from a light-receiving picture element which corresponds to said fourth filter element on the basis of said light having said fourth color component;

a light-receiving signal of a first fundamental color component is obtained from a difference between said light-receiving signal based on said light having said first color component and said light-receiving signal based on said light having said second color component; and

a light-receiving signal of a second fundamental color component is obtained from a difference between said light-receiving signal based on said light having said third color component and said light-receiving signal based on said light having said fourth color component.

5,703,642

FULL DEPLETION MODE CLOCKING OF SOLID-STATE IMAGE SENSORS FOR IMPROVED MTF PERFORMANCE

Eric Gordon Stevens, Rochester, N.Y., assignor to Eastman Kodak Company, Rochester, N.Y.

Filed Sep. 30, 1994, Ser. No. 316,001

Int. Cl.[6] H04N *5/335;3/14*

U.S. Cl. 348—317 **19 Claims**

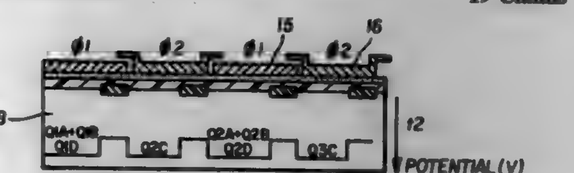

1. A method of imaging with charge coupled devices (CCD) to reduce lateral diffusion of charge carriers within the CCD by increasing depletion depth comprising the steps of:

employing with an image sensing system having a CCD with clock means for capability of transferring charge under control of a multiphase clock having at least two phases, said clock means having barrier means for separating of charger representative of individual pixels;

capturing image data to be stored and transferred by the CCD via image sensing means by allowing photons to become incident upon photosensors contained on the CCD;

applying to the charge coupled device the multiphase clock having n phases, each phase having a substantially larger duty cycle in a first logic state that increases depletion depth within the CCD as compared to a second logic state that does not increase depletion within the CCD as much as the first logic state; and

arranging each phase of the multiphase clock such that all phases of the multiphase clock exist at the first logic state during integration periods for the CCD.

5,703,643

SIGHT-TRACKING VIEWING DEVICE

Jean-Pierre Merle, Orsay; Martine Lassalle, Voisins le Bretonneux; Franck Bernoux, L'Hay-les-Roses, and Maurice Adda, Antony, all of France, assignors to Aerospatiale Societe Nationale Industrielle, Paris, France

Filed Apr. 13, 1995, Ser. No. 421,561

Claims priority, application France, Apr. 18, 1994, 94 04587

Int. Cl.[6] H04N *5/225*

U.S. Cl. 348—341 **8 Claims**

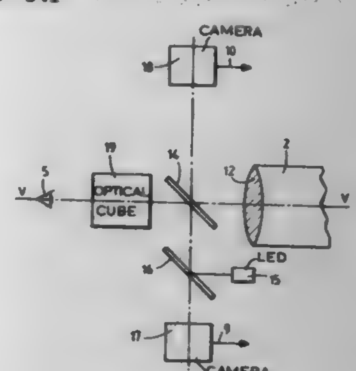

1. A device for use with a viewfinder, on the eyepiece side thereof, and, with a calculating means, to form a system to determine at every instant that portion of a field sighted by the eye of an observer through said viewfinder, said device comprising:

an optical splitter element arranged on the optical axis of said viewfinder;

a light source sending a light beam to said eye, by way of said optical splitter element, in order to form a reflection;

first picture-taking means observing said reflection by way of said optical splitter element and generating first electrical signals representative of the orientation of the optical axis of said eye, said first signals being required to be sent to said calculating means; and

second picture-taking means observing said field by way of said optical splitter element and generating second electrical signals representative of said field, said second signals likewise being required to be sent to said calculating means,

wherein said device is arranged on the image side of the eyepiece of said viewfinder and includes a thick optical plate whose parallel faces are orthogonal to said optical axis of said finder, said thick optical plate having a shape at least approximately of a cube.

5,703,644

AUTOMATIC EXPOSURE CONTROL APPARATUS

Tsutomu Mori, Hirakata; Makoto Fujimoto, Ibaragi; Yukie Goto, Hirakata, and Yo Egusa, Kyoto, all of Japan, assignors to Matsushita Electric Industrial Co., Ltd., Kadoma, Japan

Filed May 20, 1993, Ser. No. 65,119

Claims priority, application Japan, May 21, 1992, 4-128529; May 22, 1992, 4-130400; May 22, 1992, 4-130401; Nov. 26, 1992, 4-316820

Int. Cl.[6] H04N *5/335*

U.S. Cl. 348—363 **29 Claims**

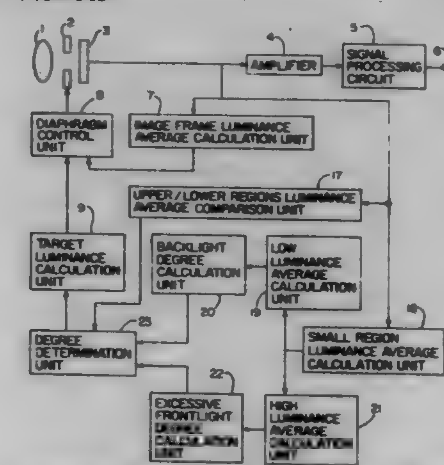

11. An automatic exposure control apparatus comprising:

state judgment means for judging whether an image frame is in a backlight state or in an excessive frontlight state based on a spatial luminance pattern of said image frame;

image frame luminance calculation means for calculating an average luminance of said image frame;

region luminance calculation means for calculating average luminances of a plurality of regions, said plurality of regions constituting said image frame;

first select region luminance calculation means for arranging said average luminances of said plurality of regions obtained by said region luminance calculation means in luminance order such that said average luminances are arranged in at least one of ascending and descending order, for selecting at least one of said plurality of regions by identifying a predefined range in said luminance order and selecting the at least one of said plurality of regions from said plurality of regions which have a corresponding average luminance that is within the predefined range in said luminance order, and for calculating an average value of said average luminances of said selected at least one region;

second select region luminance calculation means for arranging said average luminances obtained by said region luminance calculation means in luminance order such that said average luminances are arranged in at least one of ascending and descending order, for selecting at least one of said plurality of regions by identifying a predefined range in said luminance order and selecting the at least one of said plurality of regions from said plurality of regions which have a corresponding average luminance that is within the predefined range in said luminance order, and for calculating an average value of said average luminances of said selected at least one region;

backlight degree calculation means for calculating a first value representing a degree of backlighting in said image frame as a function of said average value obtained by said first select region luminance calculations means; excessive frontlight degree calculation means for calculating a second value representing an excessive degree of frontlighting of said image frame as a function of said average value obtained by said second select region luminance calculation means;

correction amount determination means for determining a correction amount based on the judgment result by said state judgment means, said first value and said second value;

target luminance calculation means for calculating a target average luminance for an exposure correction based on said correction amount; and

exposure correction means for correcting an exposure so that said average luminance obtained by said image frame luminance calculation means is kept substantially equal to said target average luminance.

5,703,645

VIDEO SIGNAL TRANSMITTING APPARATUS

Norio Kiriyama, and Hirobumi Yokosuka, both of Hitachi, Japan, assignors to Hitachi, Ltd., Tokyo, Japan

Filed Aug. 30, 1990, Ser. No. 574,771

Claims priority, application Japan, Sep. 16, 1989, 1-240320

Int. Cl.[6] H04N *7/12;11/02*

U.S. Cl. 348—388 **9 Claims**

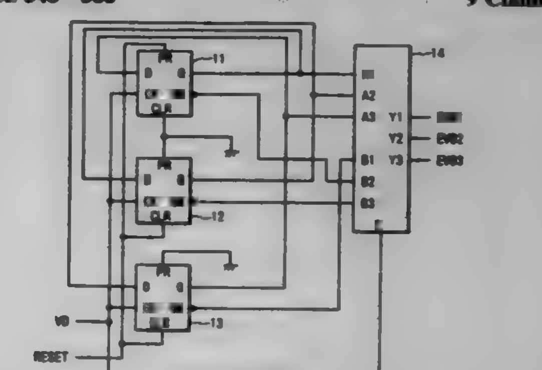

1. In a video signal transmitting apparatus in which a video signal inputted thereto is in a bi-level form, in which said video signal is converted to a plurality of signals and said plurality of converted signals are transmitted to a display apparatus, and in which each one of said plurality of converted signals has a lower frequency than said video signal, the improvement in said video signal transmitting apparatus comprising:

signal transmitting means for transmitting said plurality of converted signals simultaneously, wherein all of said plurality of converted signals use the same and only two, predetermined analog values, said two, predetermined analog values representing all logic levels corresponding to each one of said plurality of converted signals; and

regenerating means, coupled to said signal transmitting means, for performing an arithmetic addition operation of the analog values, received simultaneously and corresponding to the plurality of converted signals transmitted from said signal transmitting means, and for restoring said video signal on a basis of the simultaneously received analog values.

5,703,646
PICTURE ENCODING METHOD, PICTURE ENCODING APPARATUS AND PICTURE RECORDING MEDIUM
Tsuyoshi Oda, Chiba, Japan, assignor to Sony Corporation, Tokyo, Japan
Continuation of Ser. No. 351,262, Feb. 8, 1995, abandoned. This application Dec. 19, 1996, Ser. No. 770,593
Claims priority, application Japan, Apr. 9, 1993, P5-105943
Int. Cl.[6] H04N *7/18*
U.S. Cl. 348—401 15 Claims

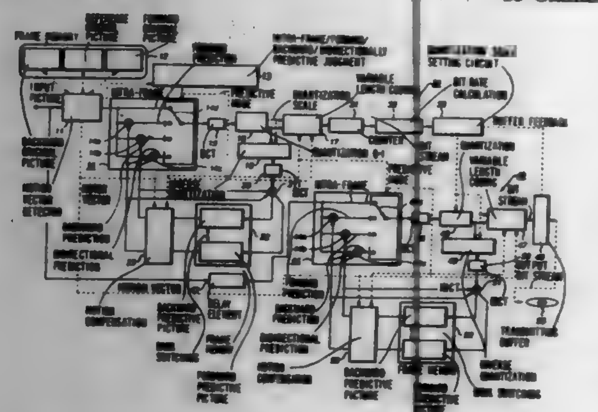

1. An encoding method, comprising the steps of:
receiving an input video signal;
selectively encoding at least a portion of said input video signal by intra-frame encoding or predictive encoding to generate first encoded data, said predictive encoding including forward predictive encoding and backward predictive encoding;
transform encoding said first encoded data to generate first coefficient data;
quantizing said first coefficient data by a fixed step size;
variable length encoding said first quantized data to generate a first bit stream;
determining an encoding rate of said first bit stream every GOP as a function of a data quantity of intra-frame and forward-predictive encoded pictures only in the GOP;
selectively encoding said input video signal by intra-frame or predictive encoding to generate second encoded data;
transform encoding said second encoded data to generate second coefficient data;
setting a variable step size according to the encoding rate determined every GOP;
quantizing said second coefficient data by said variable step size;
variable length encoding said second quantized data to generate a second bit stream; and
outputting said second bit stream.

5,703,647
APPARATUS FOR ENCODING/DECODING A VIDEO SIGNAL
Sang-Ho Kim, Seoul, Rep. of Korea, assignor to Daewoo Electronics, Co., Ltd., Seoul, Rep. of Korea
Filed Aug. 31, 1995, Ser. No. 521,772
Claims priority, application Rep. of Korea, Aug. 31, 1994, 94-21675
Int. Cl.[6] H04N *7/30*
U.S. Cl. 348—403 5 Claims

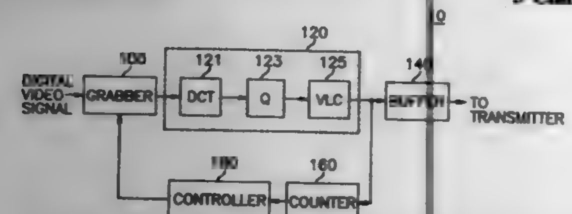

1. An encoding apparatus, for use in a video signal encoder, for encoding an input video signal, the input video signal including a plurality of video frame signals, comprising:
first storage means for sequentially storing the video frame signals on a frame-by-frame basis and, in response to a control signal, for providing a stored video frame signal;
means for transforming the stored video frame signal from the spatial domain into the frequency domain to provide transform data;
means for quantizing the transform data based on a predetermined quantizer scale to provide quantized transform data;
means for statistically coding the quantized transform data to produce an encoded video frame signal;
second storage means for temporarily storing the encoded video frame signal in order to transmit the encoded video frame signal at a constant transmission rate; and
means for providing the control signal based on the encoded video frame signal to thereby enable a video frame signal, being stored in the first storing means at the moment when the transmission of the encoded video frame signal is completed, to be transformed at the transformation means.

5,703,648
CODING APPARATUS
Akihiro Shikakura, Kawasaki, Japan, assignor to Canon Kabushiki Kaisha, Tokyo, Japan
Continuation of Ser. No. 300,330, Sep. 2, 1994, abandoned. This application Feb. 19, 1997, Ser. No. 801,361
Claims priority, application Japan, Sep. 17, 1993, 5-255113
Int. Cl.[6] H04N *7/30;7/50*
U.S. Cl. 348—405 26 Claims

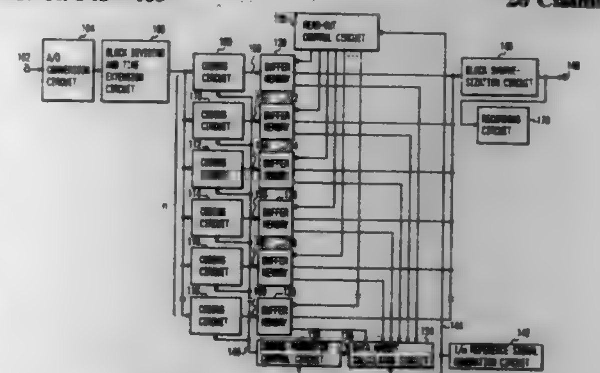

1. A coding apparatus comprising:
a) block dividing means for dividing one picture of an input image signal into (n) blocks;
b) (n) coding means for coding the image signals of said (n) blocks; and
c) control means for dividing one picture of said input signal into (m) blocks so as to exist over said (n) blocks and for controlling an amount of codes which are generated from each of said coding means in a unit of each of said (m) blocks.

5,703,649
DIGITAL VIDEO SIGNAL CODING APPARATUS AND METHOD, AND CODED VIDEO SIGNAL DECODING APPARATUS AND METHOD
Tetsujiro Kondo, Kanagawa, Japan, assignor to Sony Corporation, Tokyo, Japan
Filed Sep. 5, 1996, Ser. No. 706,612
Claims priority, application Japan, Sep. 8, 1995, 7-257077
Int. Cl.[6] H04N *7/32*
U.S. Cl. 348—408 17 Claims

1. A digital video coding apparatus, comprising:
hierarchical image forming means for forming a second hierarchical video signal having lower resolution than a first hierarchical video signal based on said first hierarchical video signal;
hierarchy prediction means for predicting said first hierarchical video signal from said second hierarchical video signal;

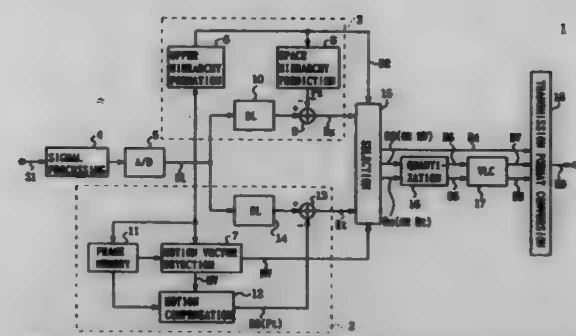

hierarchy predictive residue calculating means for calculating a first predictive residue by obtaining the differential between said hierarchy predicted video signal and said first hierarchical video signal to be predicted;
motion vector detection means for detecting a motion vector between the current video signal and the video signal before one or "n" frames for said current video signal;
motion compensated prediction means for predicting said current video signal from the video signal of one or "n" frames before based on said motion vector;
motion compensated predictive residue calculating means for calculating the second predictive residue by obtaining the differential between said motion compensated predictive video signal and said current video signal to be predicted; and
transmission means for transmitting the predictive residue, said second hierarchical video signal and/or said motion vector; wherein
the predictive residue to be transmitted is obtained by adaptively combining said hierarchy prediction means and said hierarchy predictive residue calculating means, and said motion compensated prediction means and said motion compensated residue calculating means.

5,703,650
METHOD OF AND DEVICE FOR ESTIMATING MOTION IN A VIDEO SIGNAL
Roger N. Robinson, Buckinghamshire, England, assignor to Vistek Electronics Ltd., Buckinghamshire, United Kingdom
Filed Oct. 31, 1995, Ser. No. 550,692
Claims priority, application United Kingdom, Oct. 31, 1994, 9422018
Int. Cl.[6] H04N *7/32;7/48*
U.S. Cl. 348—413 21 Claims

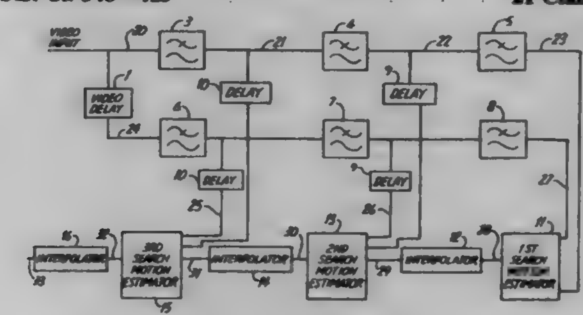

1. A device for estimating motion in an electronic visual signal, comprising;
a first channel for receiving the signal and a second channel for receiving a comparison signal;
a first filter arranged to receive said signal;
a second filter arranged to receive said comparison signal;
a motion estimator coupled to said filters to receive said filtered signal and said comparison filtered signal for estimating the motion in the signal; and
a further first filter for prefiltering the signal and providing a prefiltered signal to said first filter, a further second filter for prefiltering the comparison signal and providing a prefiltered comparison signal to said second filter and a further motion estimator coupled to said further filters and arranged to receive the output of said motion estimator for estimating motion in the signal at a higher resolution than the motion estimator.

5,703,651
MOTION PICTURE EXPERT GROUP (MPEG) VIDEO CODER/DECODER APPARATUS
Hyung Suk Kim, and Kwang Young Shin, both of Seoul, Rep. of Korea, assignors to LG Electronics, Inc., Seoul, Rep. of Korea
Filed Dec. 22, 1995, Ser. No. 577,226
Claims priority, application Rep. of Korea, Dec. 23, 1994, 36436/1994
Int. Cl.[6] H04N *7/18*
U.S. Cl. 348—416 10 Claims

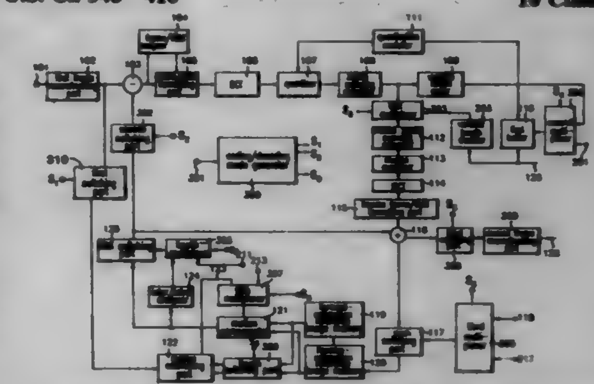

1. A motion picture expert group (MPEG) video coder-decoder (CODEC), comprising:
a coding/decoding mode generator for detecting whether a mode signal inputted from an input terminal is a coding-mode, or a decoding-mode, and generating one among first to ninth mode control signals according to a detected mode;
a coder/decoder selector for selectively converting a routine of a coded bit stream according to said first to ninth mode control signals which are generated from said coding/decoding mode generator; and
an MPEG video coder/decoder for selectively coding or decoding an image bit stream selected by the coder/decoder selector, and then transmitting the image bit stream to a storage element, or to a displayer,
wherein said coder/decoder selector comprises:
a second multiplexer which not only selects a variable length coded bit row from a variable length coder according to a fourth mode control signal generated from said coding/decoding mode generator and then outputs said variable length coded bit row to a first output terminal through a first buffer, but also selects a bit row to be decoded and then provides said bit row to a variable length decoder through said first buffer;
a first multiplexer which selects both a discrete cosine transform (DCT) coefficient information which is decoded by said variable length decoder, and a pair of run and level which is zigzag scanned by a zigzag (ZZ) scanner according to a third mode control signal, and then provides both said DCT coefficient information and said pair of run and level to an inverse ZZ scanner;
a third switching part which outputs an image information in which a motion is compensated by an adder, to an output terminal of a decoder through a second frame reconstructing part, according to a fifth mode control signal generated from said coding/decoding mode generator;
a third multiplexer which selects both a coding-type of said variable length coder and a decoding-type of said variable length decoder, and then transmits both said coding-type and said decoding-type to a sixth switching part, according

to a sixth mode control signal generated from said coding/decoding mode generator;
a fourth multiplexer which selects an inter/intra signal achieved from an inter/intra analyzer according to a seventh mode control signal generated from said coding/decoding mode generator, or another inter/intra signal reproduced by said variable length decoder, and controls a fifth switching part;
a fifth multiplexer which selects a motion vector achieved from a motion estimating part, or another motion vector reconstructed by said variable length decoder, and then provides a selected motion vector to a motion compensator, according to an eighth mode control signal generated from said coding/decoding mode generator;
a fourth switching part which selects a reference image data of a forward-estimation reference image memory, or another reference image data of a reverse-estimation reference image memory, and then provides a selected reference image data to said motion estimating part, according to a ninth mode control signal generated from said coding/decoding mode generator;
a second switching part which is switched by a second mode control signal generated from said coding/decoding mode generator, and then provides a motion-compensated image information through said fifth switching part to a subtractor; and
a first switching part which provides an input image information generated from a first frame reconstructing part to the motion-estimation part, according to a first mode control signal generated from said coding/decoding mode generator.

5,703,652

INFORMATION SIGNAL ENCODING SYSTEM AND METHOD FOR ADAPTIVELY ENCODING AN INFORMATION SIGNAL

Tetsujiro Kondo; Yasuhiro Fujimori; Kenji Takahashi, and Kunio Kawaguchi, all of Kanagawa, Japan, assignors to Sony Corporation, Tokyo, Japan

Filed Jul. 23, 1996, Ser. No. 685,087

Claims priority, application Japan, Jul. 28, 1995, 7-212684

Int. Cl.[6] H04N *7/12*

U.S. Cl. 348—421 **7 Claims**

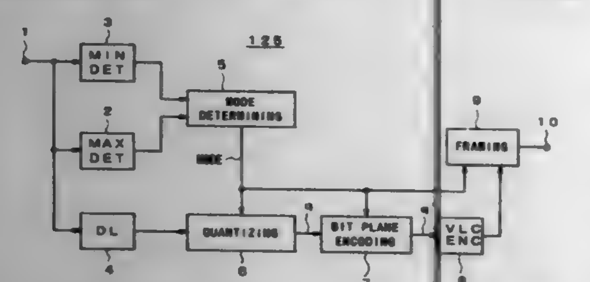

1. An information signal encoding apparatus for encoding an input digital information signal in such a manner that the amount of data generated decreases, the apparatus comprising:
means for generating difference signals representing differences between sample values of the input digital information signal;
means for block segmenting the difference signals;
means for detecting a maximum value and a minimum value of the difference signals of each block, wherein for each block it is determined that the range of levels of the difference signals crosses 0 when the maximum value is greater than zero and the minimum value is less than zero;
mode determining means operable on each block for assigning a first quantizing mode when the range of the levels crosses 0, and assigning a second quantizing mode when the range of the levels does not cross 0;
quantizing means for quantizing the difference signals with a predetermined number of bits smaller than the original number of bits in the first quantizing mode and for quantizing the difference signals with a predetermined number of bits smaller than the original number of bits and performing a code conversion for decreasing the number of bits in the second quantizing mode; and
transmitting means for transmitting information identifying the first quantizing mode and the second quantizing mode and output data of said quantizing means.

5,703,653

VIDEO SIGNAL COMPRESSION APPARATUS FOR HORIZONTAL COMPRESSION OF A VIDEO SIGNAL

Yosuke Izawa; Masahiro Tani; Maoji Okumura; Yutaka Nio, and Toshichika Sato, all of Osaka, Japan, assignors to Matsushita Electric Industrial Co., Ltd., Osaka, Japan

Division of Ser. No. 361,634, Dec. 22, 1994. This application Oct. 2, 1996, Ser. No. 725,074

Claims priority, application Japan, Dec. 22, 1993, 5-324912; Jun. 20, 1994, 6-137075

Int. Cl.[6] H04N *7/01*

U.S. Cl. 348—445 **1 Claim**

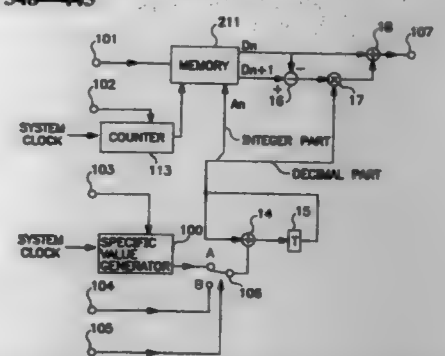

1. A video signal compression apparatus for compressing a video signal comprising:
memory means for storing an input video signal and outputting data value D_n for address A_n and data value D_{n+1} for address A_{n+1} when a read address A_n is given;
value generator means for counting a number of system clock pulses and outputting a previously written count value corresponding to said number of counted system clock pulses;
signal selector means for selecting one of the count value and a fixed value to generate a selector output value;
register means for storing and outputting a register value;
first adder means for adding the selector output value and the register value to generate an adder output value;
said register means for latching the adder output value, wherein an integer part of the adder output value is said read address A_n;
subtracter means for subtracting data D_n from data D_{n+1} and generating a subtraction value;
multiplier means for multiplying said subtraction value by a decimal part of the register value to generate a multiplier output value; and
second adder means for adding the data value D_n and the multiplier output value to generate said compressed video signal.

5,703,654

VIDEO SIGNAL ENCODER

Akira Iizuka, Tokyo, Japan, assignor to Nippon Steel Corporation, Tokyo, Japan

Filed Jun. 24, 1996, Ser. No. 667,589

Claims priority, application Japan, Jun. 30, 1995, 7-188255

Int. Cl.[6] H04N *7/01;5/253;7/08*

U.S. Cl. 348—446 **9 Claims**

1. A video signal encoder comprising:
video signal converting means for receiving a non-interlaced video signal having a frame frequency of 24 Hz, and for

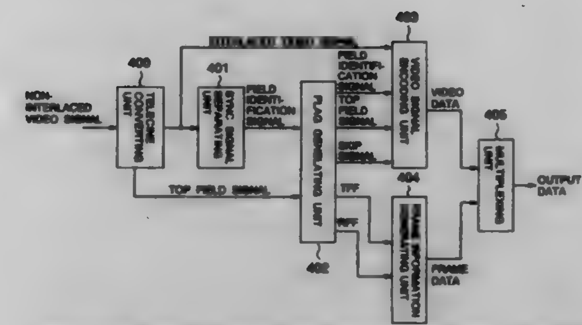

converting said non-interlaced video signal into an interlaced video signal having a field frequency of 60 Hz by overlapping a portion of a plurality sets of first and second fields, each of said plurality sets being produced from one frame of said non-interlaced video signal;
top field signal generating means for generating such a top field signal which becomes active with respect to a top field among a plurality of fields of said interlaced video signal corresponding to a respective frame of said non-interlaced video signal;
field identification signal generating means for generating a field identification signal indicative of switching of the respective fields of said interlaced video signal; and
encoding means for encoding said interlaced video signal by skipping said portion of overlapped fields based upon both said top field signal and said field identification signal.

5,703,655

VIDEO PROGRAMMING RETRIEVAL USING EXTRACTED CLOSED CAPTION DATA WHICH HAS BEEN PARTITIONED AND STORED TO FACILITATE A SEARCH AND RETRIEVAL PROCESS

Douglas Arthur Corey; Thomas K. Landauer, and Bud C. Wonsiewicz, all of Boulder, Colo., assignors to U S West Technologies, Inc., Boulder, Colo.

Continuation of Ser. No. 410,266, Mar. 24, 1995. This application Jun. 19, 1996, Ser. No. 665,995

Int. Cl.[6] H04N *7/08;7/087;7/10;9/64*

U.S. Cl. 348—468 **30 Claims**

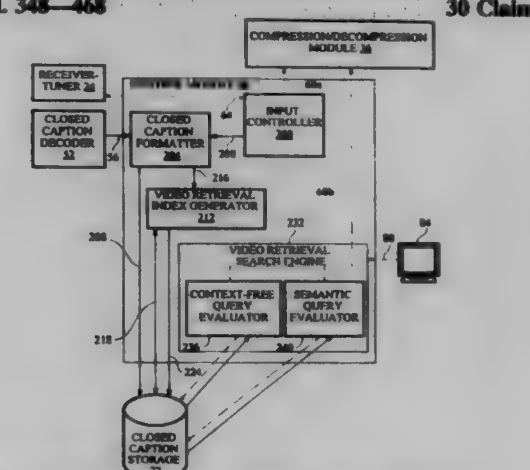

1. A method for obtaining video data, comprising:
receiving video signals having corresponding video data and closed caption data, wherein said video data comprises different information than said closed caption data;
storing said video data as segments;
partitioning said extracted closed caption data to obtain a plurality of text portions, wherein one or more of said text portions are determined according to a detectable change in content of said video signals;
storing said plurality of text portions in a means for storing;
generating video retrieval information data items for retrieving said segments, wherein each of said video retrieval information data items is generated using a related one of said text portions, said related text portion being retrievable from said means for storing using the generated video retrieval information data item, and wherein, for some of said video retrieval information data items, VRI, said video retrieval information data item VRI provides access to a stored associated said segment of the video data corresponding to the related text portion used to generate VRI;
providing a query for desired video data;
controlling the selection of a first stored video data segment using said query with at least one of said video retrieval information data items; and
retrieving said first stored video data segment.

5,703,656

DIGITAL PHASE ERROR DETECTOR FOR LOCKING TO COLOR SUBCARRIER OF VIDEO SIGNALS

Gregory A. Shreve, San Pedro; Kim S. Guzzino, Los Angeles, and Robert W. Hulvey, Hermosa Beach, all of Calif., assignors to TRW Inc., Redondo Beach, Calif.

Filed Dec. 12, 1995, Ser. No. 571,018

Int. Cl.[6] H04N *9/45*

U.S. Cl. 348—549 **24 Claims**

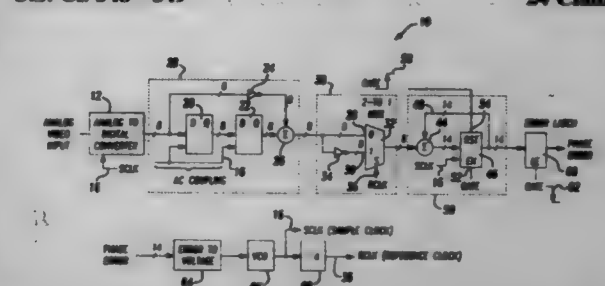

1. A digital phase error detector for locking to a color subcarrier signal in an analog video signal, said digital phase error detector comprising:
digitizing means for digitizing said color subcarrier signal in said analog video signal to generate a first digital data stream, said digitizing means being responsive to a sample clock signal;
filtering means for generating a second digital data stream by filtering said first digital data stream to substantially eliminate DC offset of said color subcarrier signal digitized by said digitizing means;
mixing means for generating a third digital data stream from said second digital data stream representing sum and difference frequencies of a product of said color subcarrier signal and a reference clock signal;
accumulator means for accumulating said product of said third digital data stream, said accumulated product representing a phase error between said color subcarrier signal and said reference clock signal which is substantially free of DC offset of said color subcarrier signal; and
a voltage controlled oscillator responsive to said phase error for generating said sample clock signal.

5,703,657

VIDEO DISPLAY IN WHICH A SCREEN MODE FOR DIFFERENT INPUT SIGNALS IS SET BASED ON STORED INFORMATION

Kazuhisa Maruoka, Kanagawa, and Etsuko Morota, Saitama, both of Japan, assignors to Sony Corporation, Tokyo, Japan

Filed May 23, 1996, Ser. No. 652,418

Claims priority, application Japan, Jun. 22, 1995, P07-156188

Int. Cl.[6] H04N *3/27*

U.S. Cl. 348—554 **3 Claims**

1. A picture outputting apparatus comprising:

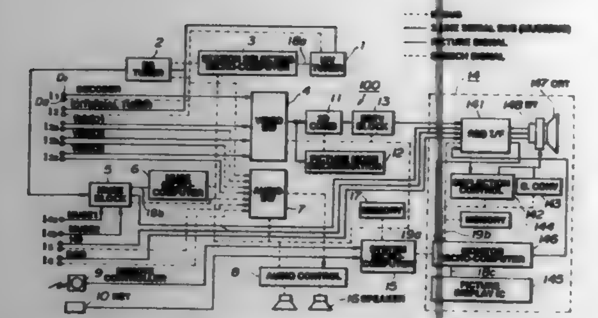

inputting means to which a plurality of picture signals are selectively entered;

setting means for setting screen modes in association with said plurality of picture signals;

storage means for storing screen mode information for said plurality of picture signals as set by said setting means;

display means for displaying a picture corresponding to an optional picture signal of the plurality of picture signals selectively entered by said inputting means;

determining means for determining the kind of said plurality of picture signals entered to said inputting means; and

control means for controlling said display means so that a picture signal corresponding to the optional picture signal entered to said inputting means is display on a screen with a screen mode matched to said optional picture signal based upon the results of said determining means.

5,703,658

VIDEO DECODER/CONVERTER WITH A PROGRAMMABLE LOGIC DEVICE WHICH IS PROGRAMMED BASED ON THE ENCODING FORMAT

Yasutaka Tsuru; Takumi Okamura, both of Yokohama; Shoji Kimura, Kawasaki; Yuji Yamamoto, Yokohama; Toshinori Murata, Yokohama; Kenji Katsumata, Yokohama; Moriyoshi Akiyama, Fujisawa, and Takanori Eda, Yokohama, all of Japan, assignors to Hitachi, Ltd., Tokyo, Japan

Filed Jun. 12, 1996, Ser. No. 661,990

Claims priority, application Japan, Jun. 14, 1995, 7-147011

Int. Cl.^{6} H04N *7/01*

U.S. Cl. 348—554 **3 Claims**

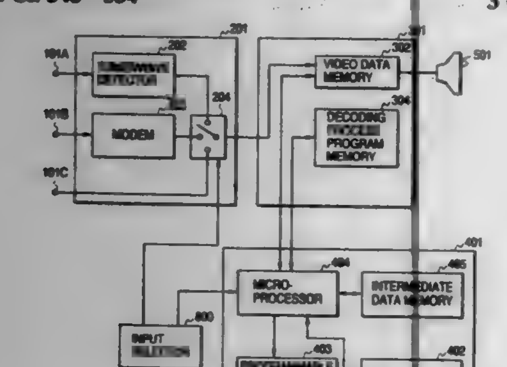

1. A television signal receiving apparatus, comprising:

data input means for fetching input video data encoded by any one encoding format from among multiple kinds of encoding formats;

video data memory means for storing the input video data received from said data input means;

decoding process program memory means for storing multiple kinds of decoding process programs to execute decoding processes corresponding respectively to video data having respective ones of said multiple kinds of encoding formats;

a programmable logic device capable of having at least a part of a circuit construction thereof varied to execute the decoding process;

logic device varying means for varying the circuit construction of said programmable logic device;

decoding control means for controlling said logic device varying means to vary the circuit construction of the programmable logic device depending on the encoding format of the input video data and for decoding the input video data stored in said video data memory means into a decoded video signal which may be displayed, depending on a selected decoding process program; and

display means for displaying said decoded video signal.

5,703,659

METHOD OF REDUCING AND MAGNIFYING PICTURE SIZE OF A VIDEO COMPOSITE SIGNAL

Kazuyoshi Tanaka, Tokyo, Japan, assignor to NEC Corporation, Tokyo, Japan

Continuation-in-part of Ser. No. 534,746, Sep. 27, 1995, abandoned, which is a continuation of Ser. No. 262,438, Jun. 20, 1994, abandoned. This application Mar. 19, 1996, Ser. No. 617,402

Claims priority, application Japan, Jun. 21, 1993, 5-172135

Int. Cl.^{6} H04N *9/74; 9/64*

U.S. Cl. 348—576 **4 Claims**

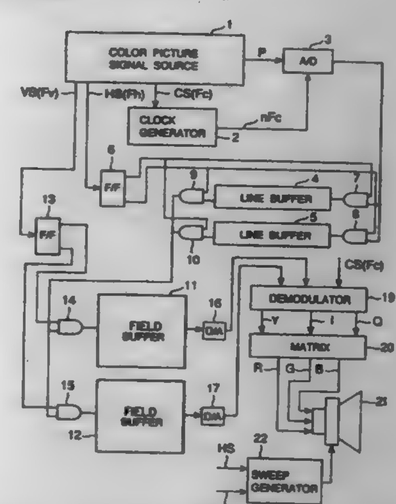

1. A method of reducing and magnifying picture size of a video composite signal composed of data of a sequence of fields having a sequence of lines and modulated with a color sub-carrier; comprising:

a step of sampling and A/D converting the video composite signal in synchronization with a clock signal, the clock signal having a frequency of four times the frequency of, and being synchronized with, the color sub-carrier, wherein the video composite signal is converted into digital data composed of a sequence of pairs of data, each of said pairs of data being one of an even pair of data sampled at phases of the color sub-carrier shifted by 0 and $\pi/2$ from a base phase and an odd pair of data sampled at phases of the color sub-carrier shifted by π and $3\pi/2$ from said base phase;

a step of buffering said digital data with a first field buffer and a second field buffer for obtaining first and second display data, said first display data being composed of data read out synchronously with synchronous signals for displaying a picture from said first and said second field buffers storing said digital data, wherein data of certain lines of each field and certain pairs of data of each line of said digital data are subtracted when the picture size is reduced, and data of certain lines of each field and certain pairs of data of each line of said digital data are repeated a predetermined number of times when the picture size is magnified, and

said second display data being composed of a display sequence of pairs of data, wherein each even pair of data of said display sequence of pairs of data are read out simultaneously with a corresponding odd pair of data of said first display data from said first and said second field buffers storing said digital data of one of adjacent fields of said corresponding odd pair of data, and each odd pair of data of said display sequence of pairs of data are read out simultaneously with a corresponding even pair of data of said first display data from said first and said second field buffers storing said digital data of one of adjacent fields of said corresponding even pair of data; and

a step of demodulating and D/A converting a sequence of ensembles of the even and the odd pair of data of said first and said second display data simultaneously read out into R, G and B signals for displaying the picture.

5,703,660

SYSTEM AND METHOD FOR DECODING A QUADRATURE AMPLITUDE MODULATED SIGNAL

Robert J. Hankinson, Carrollton, Tex., and Otto Sponring, San Jose, Calif., assignors to Cirrus Logic, Inc., Fremont, Calif.

Filed Feb. 8, 1996, Ser. No. 598,453

Int. Cl.^{6} H04N *5/65*

U.S. Cl. 348—638 **39 Claims**

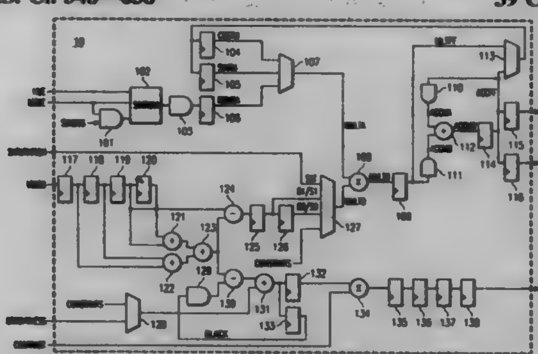

1. A method of decoding a phase and amplitude modulated signal having a reference burst, comprising the steps of:

during a first decoding phase:

calculating a plurality of constants by sampling the signal; and

determining a black level of the signal;

during a second decoding phase:

decoding color components from the signal by using the plurality of constants; and

extracting a brightness component from the signal by using the black level.

5,703,661

IMAGE SCREEN ADJUSTMENT APPARATUS FOR VIDEO MONITOR

Trans Wu, Taipei Hsien, Taiwan, assignor to Amtran Technology Co., Ltd., Taipei Hsien, Taiwan

Filed May 29, 1996, Ser. No. 654,543

Int. Cl.^{6} H04N *5/67*

U.S. Cl. 348—673 **5 Claims**

1. An image screen adjustment apparatus for video display monitor devices comprising:

a microprocessor for implementing operating and adjustment control of said monitor;

an encoder included in said monitor device for a user of said monitor device to rotate in a clockwise or counterclockwise direction for generating a pair of pulse signals; and

a rotary input signal processor means coupled between said microprocessor and said encoder for receiving said pair of pulse signals generated by said encoder and for reshaping said pulses for input to said microprocessor;

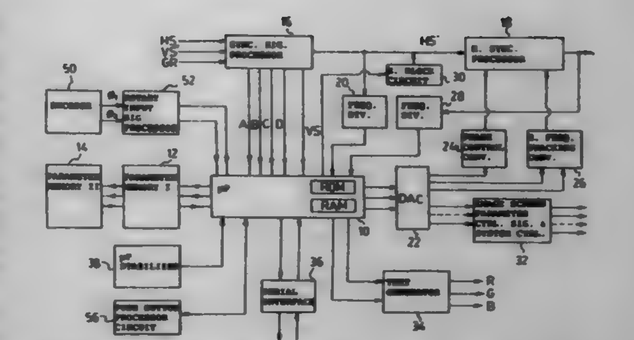

wherein said microprocessor receives said reshaped pulse signals for determining the direction of rotation and the range of rotation of said encoder, said determined direction and range of rotation being utilized as the basis for the adjustment of said image screen of said video monitor device.

5,703,662

TELEVISION FOR STORING AND DISPLAYING STILL PICTURE

Hyung-su Yoon, Seoul, Rep. of Korea, assignor to Samsung Electronics Co., Ltd., Kyungki-do, Rep. of Korea

Filed Dec. 28, 1995, Ser. No. 580,516

Claims priority, application Rep. of Korea, Aug. 5, 1995, 95-24249

Int. Cl.^{6} H04N *5/44*

U.S. Cl. 348—728 **9 Claims**

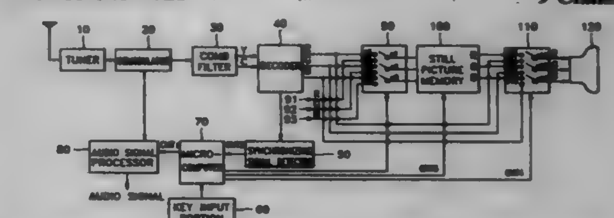

1. A television having a memory for storing a still picture signal corresponding to a desired scene comprising:

signal processing means for separating a video signal of a broadcast channel into RGB signals and a synchronizing signal;

detecting means for outputting a detecting signal according to the existence of said synchronizing signal output from said signal processing means; and

control means for controlling so that said RGB signals are displayed on a picture tube when a normal broadcast signal is input and a still picture stored in said memory is displayed on the picture tube when no signal is input, by recognizing the detecting signal.

5,703,663

PROJECTION TYPE LIQUID CRYSTAL DISPLAY APPARATUS

Kazuyoshi Fujioka, Higashiosaka; Masumi Kubo, and Yutaka Takafuji, both of Nara, all of Japan, assignors to Sharp Kabushiki Kaisha, Osaka, Japan

Filed Jul. 26, 1996, Ser. No. 687,658

Claims priority, application Japan, Jul. 28, 1995, 7-193930

Int. Cl.^{6} G02F *1/1335;* **G03B** *21/00*

U.S. Cl. 349—5 **8 Claims**

1. A projection type liquid crystal display apparatus comprising:

a light source;

a liquid crystal display device which receives a light beam emitted from the light source and forms an image light beam, the liquid crystal display device including a liquid crystal

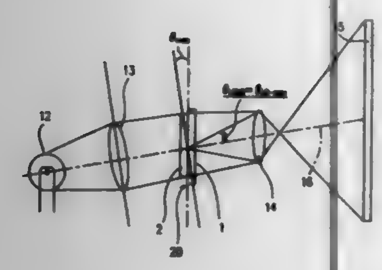

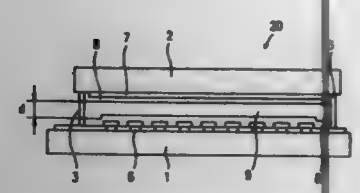

layer sandwiched between a pair of substrates, and electrodes for controlling an electro-optical effect of the liquid crystal layer; and

a projection lens which receives the image light beam and directs the image light beam onto a screen;

wherein the projection lens and the liquid crystal display device are disposed to satisfy the relationship:

$$\theta_{LC\text{-}max}-1°\leq\theta_{LENS}\leq\theta_{LC\text{-}max}+1°,$$

where θ_{LENS} is a collection angle of the projection lens and $\theta_{LC\text{-}max}$ is a maximum viewing angle of the liquid crystal display device, at which a contrast ratio of the image light beam emitted through the projection lens CR_{PROJ} is equal to a prescribed contrast ratio CR_{TARGET},

and CR_{PROJ} is calculated by the following equation:

$$CR_{PROJ}=\int T_{max}(\theta_{LC}, u, V_{LC\text{-}max})\cdot t(\theta_{LC})\, d\theta_{LC}/\int T_{min}(\theta_{LC}, u, V_{LC\text{-}min})\cdot t(\theta_{LC})\, d\theta_{LC},$$

where $u=d\cdot\Delta n/\lambda$; d is a thickness of the liquid crystal layer; Δn is a birefringence of a liquid crystal material of the liquid crystal layer; λ is a wavelength of the light beam; $t(\theta)$ is a luminance at an angle θ of the light beam incident onto the liquid crystal display device; θ_{LC} is a viewing angle of the liquid crystal display device with respect to the normal to a display plane of the liquid crystal display device; $V_{LC\text{-}max}$ is a voltage applied to the liquid crystal layer for maximizing a transmittance of the liquid crystal display device; $V_{LC\text{-}min}$ is a voltage applied to the liquid crystal layer for minimizing the transmittance of the liquid crystal display device; $\int T_{max}(\theta_{LC}, u, V_{LC\text{-}max})$ is a maximum transmittance at θ_{LC}; and $\int T_{min}(\theta_{LC}, u, V_{LC\text{-}max})$ is a minimum transmittance at θ_{LC}.

5,703,664

INTEGRATED ELECTRO-OPTIC PACKAGE FOR REFLECTIVE SPATIAL LIGHT MODULATORS

Karen E. Jachimowicz, Laveen; George R. Kelly, Gilbert, and Michael S. Lebby, Apache Junction, all of Ariz., assignors to Motorola, Inc., Schaumburg, Ill.

Filed Oct. 23, 1995, Ser. No. 553,737

Int. Cl.^{6} G02F *1/1333*

U.S. Cl. 349—58 **24 Claims**

1. An integrated electro-optic package for reflective spatial light modulators comprising:

an array of reflective spatial light modulator pixels formed on a substrate with each pixel including a control circuit formed in the substrate, each control circuit including control terminals adjacent an outer edge of the substrate, a mirror positioned on the substrate in overlying relationship to the control circuit, and spatial light modulator material positioned in overlying relationship to the mirror so that light passing through the spatial light modulator material is reflected back through the spatial light modulator material;

an overmolded housing, defining an optical waveguide having a light output surface, and a plurality of mirrored surfaces for

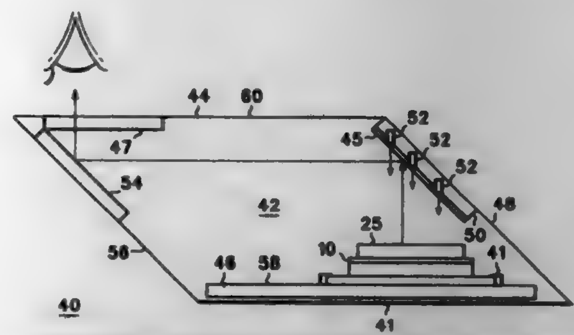

directing light from the array toward the light output surface, the array of reflective spatial light modulator pixels being mounted within the overmolded housing, the overmolded housing thereby encapsulating the array of spatial light modulator pixels formed on a substrate;

a light source positioned to direct light through a polarizing layer, positioned between the light source and the array of reflective spatial light modulator pixels, and onto the array of reflective spatial light modulator pixels, with the light source spaced from the array of reflective spatial light modulator pixels, so that light from the light source substantially evenly illuminates the array of reflective spatial light modulator pixels, the array of reflective spatial light modulator pixels being positioned so that reflected light from the array of reflective spatial light modulator pixels is directed onto the mirrored surfaces and through the optical waveguide;

a diffuser mounted on at least one of an interior aspect or an exterior aspect of the light output surface of the optical waveguide to form an image plane for reflected light from the array of reflective spatial light modulator pixels; and

a printed circuit board positioned within a lower portion of the optical waveguide defined by the overmolded housing, in electrical contact with said array of reflective spatial light modulator pixels formed on said substrate, and thereby providing support for the substrate.

5,703,665

LIQUID CRYSTAL DEVICE HAVING RESILIENT SUPPORT MEMBERS ARRANGED AT VERTICES OF AN ISOSCELES TRIANGLE

Masayoshi Muramatsu, Hoi-gun, and Masaaki Ozaki, Kariya, both of Japan, assignors to Nippondenso Co., Ltd., Kariya, Japan

Filed Jul. 2, 1996, Ser. No. 677,327

Claims priority, application Japan, Jul. 3, 1995, 7-167547; Dec. 19, 1995, 7-330702

Int. Cl.^{6} G02F *1/1333*

U.S. Cl. 349—60 **20 Claims**

1. A liquid crystal device comprising:

a liquid crystal panel;

a frame for accommodating said liquid crystal panel;

holding means disposed between said liquid crystal panel and a wall of said frame for holding said liquid crystal panel in said frame; and

interposing means disposed between said frame and said holding means, said interposing means including interposing members positioned substantially at three vertices of an isosceles triangle, said interposing means being for allowing movement

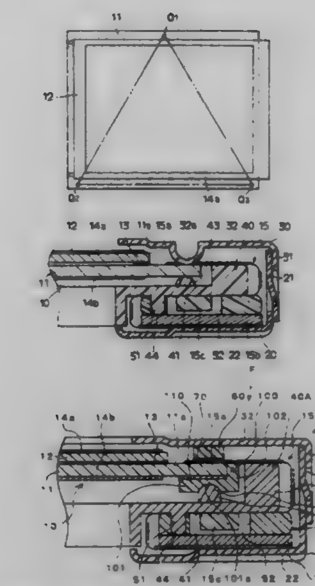

of said liquid crystal panel with respect to said frame about a side of said isosceles triangle.

5,703,666

ELECTROLUMINESCENT DEVICE FOR ILLUMINATING A LIQUID CRYSTAL DISPLAY

Toshihiro Saika, Zama; Hidemasa Mizutani, Sagamihara; Noriyuki Kaifu, Hachioji, and Toshio Kameshima, Atsugi, all of Japan, assignors to Canon Kabushiki Kaisha, Tokyo, Japan

Division of Ser. No. 294,361, Aug. 23, 1994, Pat. No. 5,486,738, which is a division of Ser. No. 934,326, Aug. 25, 1992, Pat. No. 5,384,456. This application Aug. 8, 1995, Ser. No. 512,697

Claims priority, application Japan, Aug. 29, 1991, 3-242461; Aug. 30, 1991, 3-244159

Int. Cl.^{6} G02F *1/1335*

U.S. Cl. 349—61 **2 Claims**

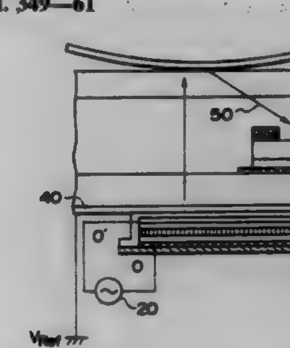

1. A liquid crystal device having a light source and liquid crystal elements which selectively transmit light emitted by the light source, said liquid crystal device comprising:

the light source, being an electroluminescent device, having a transparent electrode disposed on a light output side of the light source, an electrode opposite to the transparent electrode, and an electroluminescence emission layer interposed between the transparent electrode and the opposite electrode;

voltage supply means connected to the transparent electrode in order to feed a reference voltage to the transparent electrode; and

driving voltage application means for applying a driving voltage to the opposite electrode,

said driving voltage application means comprising a separate excitation type driving circuit using a capacitance of said electroluminescent device itself to produce an alternating current, and pulse generating means for generating a pulse responsive to an input signal to turn on and off a switch of said separate excitation type driving circuit,

wherein said pulse generating means comprises a multivibrator and a capacitor and a resistor determine a width of the pulse.

5,703,667

LIGHT GUIDE PLATES AND LIGHT GUIDE PLATE ASSEMBLY UTILIZING DIFFRACTION GRATING

Shin-Ichiro Ochiai, Yao, Japan, assignor to Shimada Precision, Co., Ltd., Kyoto, Japan

Filed Aug. 8, 1996, Ser. No. 694,064

Claims priority, application Japan, May 31, 1996, 8-138204

Int. Cl.^{6} G02F *1/1335;* **F21V** *7/04*

U.S. Cl. 349—65 **4 Claims**

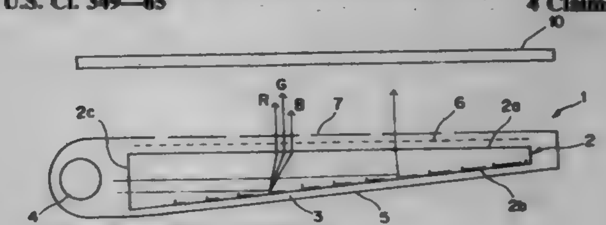

1. A light guide plate comprising:

a transparent plate; and

a diffraction grating provided on a bottom surface of the plate and diffracting toward a top surface of the plate light incident from a light source to at least one end of the plate;

wherein a grating part width/non-grating part width ratio in a unit-width of the diffraction grating is varied so as to enhance and provide uniform light intensity on the top surface of the light guide plate.

5,703,668

LIQUID CRYSTAL DISPLAY DEVICE AND METHOD OF FORMING THE SAME

Woo-Sup Shin, Kumi-si, Rep. of Korea, assignor to LG Electronics Inc., Seoul, Rep. of Korea

Filed Mar. 15, 1996, Ser. No. 616,092

Claims priority, application Rep. of Korea, Nov. 25, 1995, 1995-43741

Int. Cl.^{6} G02F *1/1333*

U.S. Cl. 349—110 **26 Claims**

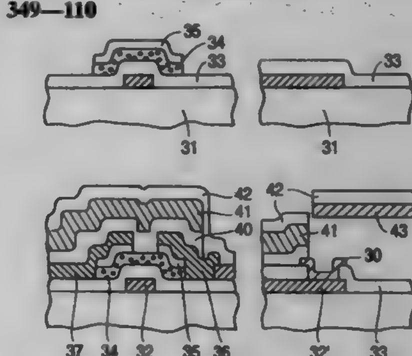

10. A method of forming a black matrix in a liquid crystal display device, the liquid crystal display device having a plurality of pixel electrodes, a plurality of data lines formed on a substrate, and areas not overlapping with the plurality of pixel electrodes and the plurality of data lines, a remaining region being defined as a portion of the non-overlapping areas, the method comprising the steps of:

a) forming a first protective layer on at least the remaining region;

b) forming a black matrix layer on the first protective layer;

c) selectively removing portions of the black matrix layer and portions of the first protective layer, wherein a black matrix is formed when the portions of the black matrix layer are selectively removed; and

d) forming a second protective layer on the black matrix, the step d) including the step of using a shadow mask to selectively control where the second protective layer is formed.

5,703,669
SUNGLASSES INCLUDING QUICK RELEASE LENS RETAINER #5
James S. Park, 2806 S. Summerset Dr., Appleton, Wis. 54915
Filed Mar. 18, 1996, Ser. No. 617,298
Int. Cl.⁶ G02C *1/00;7/10;1/04*
U.S. Cl. 351—86 **5 Claims**

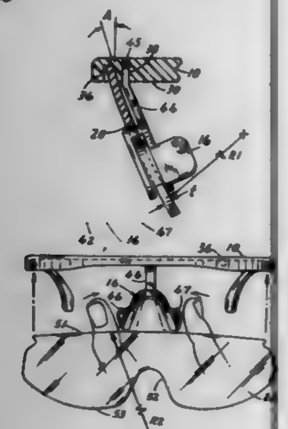

1. An interchangeable sunglass system for use in different light conditions comprising:
a frame having a first end, a second end, a top surface, and a bottom surface, said frame having an angled slot which is formed in substantially the length of said bottom surface of said frame, said frame having a cavity which is formed in substantially the middle of said frame;
a first arm having a first end and a length, said first end of said first arm being pivotally connected to said first end of said frame;
a second arm having a first end and a length, said first end of said second arm being pivotally connected with said second end of said frame;
a tinted lens having a top edge and a bottom edge, and an inverted U shaped notch formed at substantially the middle of said bottom edge, said tinted lens fitting into said angled slot of said frame;
a quick release lens retainer having a first leg and a second leg forming an inverted U shaped nose bridge and a stem extending from said inverted U shaped nose bridge, said stem being firmly retained in said cavity, said inverted U shaped notch of said tinted lens fitting over the inverted U shaped nose bridge of said quick release lens retainer and being retained thereby; and
wherein said tinted lens is removed from said frame by compressing said first leg and said second leg of said quick release lens retainer with a thumb and a fore finger, and lifting said tinted lens over said quick release lens retainer; and
wherein said stem extending from the cavity of said frame and bending at an acute angle from a line perpendicular to said bottom surface of said frame so that said tinted lens being retained by said angled slot and said legs at the same acute angle and substantially parallel with the stem of said quick release lens retainer.

5,703,670
EARPLUGS ADAPTED TO EYEGLASSES AND COMBINATION THEREOF
Shawn R. Callard, 2819 Swett Rd., Lyndonville, N.Y. 14098
Filed Nov. 19, 1996, Ser. No. 752,248
Int. Cl.⁶ G02C *5/14;1/00*
U.S. Cl. 351—123 **20 Claims**

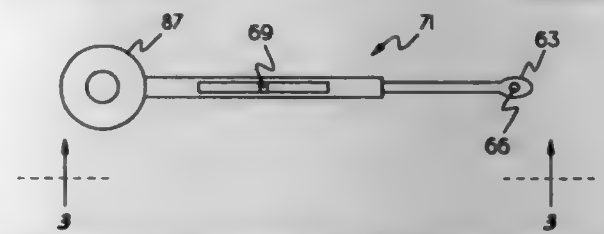

1. An earplug assembly for connection to eyeglasses, the assembly comprising a telescoping member which includes an elongated arm adapted at one end for connection to a temple of the eyeglasses and sized to permit the other end to slide into a first end of an elongated, hollow collar for slidable engagement therewith, together with a hinge block carrying an earplug and a retained member, said retained member occupying a mating retainer at a second end of said collar for rotation in at least one plane containing the telescoping member; whereby the earplug accommodates itself to the direction of the external auditory canal into which the earplug is inserted.

5,703,671
SHADING CORRECTION METHOD, PHOTOGRAPHIC PRINTER AND INDEX PRINT PRODUCTION APPARATUS
Toshihiko Narita; Hiroaki Nakamura; Kazuhiko Katakura, and Yoshihito Nakaya, all of Kanagawa, Japan, assignors to Fuji Photo Film Co., Ltd., Kanagawa, Japan
Filed Aug. 26, 1996, Ser. No. 703,356
Claims priority, application Japan, Aug. 28, 1995, 7-218710; Sep. 7, 1995, 7-230186; Jul. 12, 1996, 8-183524
Int. Cl.⁶ G03B *27/32;27/52*
U.S. Cl. 355—32 **20 Claims**

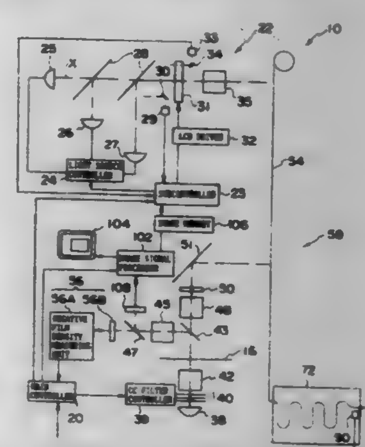

1. A shading correction method for a photographic printer in which an image is displayed on a two-dimensional display unit by controlling each pixel of the two-dimensional display unit in accordance with an image data signal, the light from a light source is irradiated on the two-dimensional display unit with the image displayed thereon, and said image is exposed on a photosensitive material by the light transmitted through or reflected from said two-dimensional display unit, the method comprising the steps of:
turning on the light source by setting all the pixels of said two-dimensional display unit to a predetermined driven state;
measuring the density of each pixel of the image formed by the light transmitted through or reflected from the two-dimensional display unit corresponding to each pixel of said two-dimensional display unit;
calculating the correction amount of the light transmittance or the light reflectance of each pixel of said two-dimensional display unit on the basis of the density of each pixel of the image corresponding to each pixel of the two-dimensional display unit; and
correcting selected one of the image data signal and the driving conditions of each pixel at the time of displaying an image on the two-dimensional display unit on the basis of the correction amount of the light transmittance or the light reflectance.

5,703,672
METHOD OF MAKING A PHOTOGRAPHIC PRINT
Takaaki Terashita, Kanagawa, Japan, assignor to Fuji Photo Film Co., Ltd., Kanagawa, Japan
Filed Dec. 14, 1995, Ser. No. 572,658
Claims priority, application Japan, Dec. 22, 1994, 6-320525
Int. Cl.⁶ G03B *27/80*
U.S. Cl. 355—38 **20 Claims**

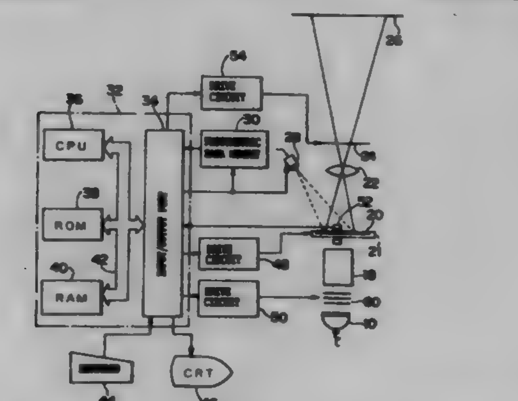

1. A method of making a print having a first transporting process for transporting a film in a first direction and a second transporting process for transporting the film in a second direction, wherein an image on the film is copied on a photographic copying apparatus so as to make a print, said method comprising the steps of:
carrying out photometry on at least all images on the film that are to be copied by dividing each of the images that are to be copied into a number of pixels, logarithmically transforming thus obtained photometric values into photometric data sets, and storing all thus transformed photometric data sets in correspondence with individual images on the film in said first transporting process;
reading a plurality of said photometric data sets and determining a condition of selection for selecting photometric data of pixels for use in determining an exposure amount; and
selecting photometric data of pixels which meet the condition of selection from photometric data sets of images on the film that are to be copied and making a print based on thus selected photometric data in said second transporting process.

5,703,673
METHOD OF AND APPARATUS FOR INPUTTING PHOTOGRAPHIC INFORMATION, CAMERA, AND METHOD OF AND APPARATUS FOR PRINTING PHOTOGRAPHIC INFORMATION
Kanji Tokuda, Kanagawa, Japan, assignor to Fuji Photo Film Co., Ltd., Kanagawa, Japan
Filed May 26, 1995, Ser. No. 451,567
Claims priority, application Japan, Jul. 4, 1994, 6-152206
Int. Cl.⁶ G03B *17/24*
U.S. Cl. 355—40 **12 Claims**

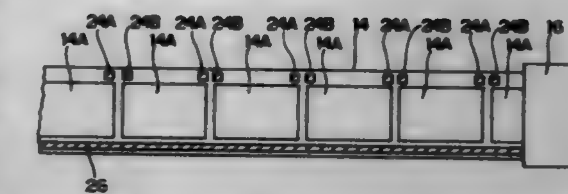

10. An apparatus for printing photographic information by which it is permitted, when images are photographed by using a photographic film at which a magnetic recording layer is provided, to record photographic information regarding the entire photographic film and photographic information regarding respective image frames, by selecting from a plurality of set phrases registered in advance and magnetically recording, and to record photographic information regarding the entire photographic film and photographic information regarding respective image frames, by the manner which involves user's inputting individual characters of the phrase one by one and magnetically recording, on a predetermined recording medium, comprising:
photographic information reading means for reading said photographic information;
control mark reading means for reading a control mark added and inputted in advance to the magnetic recording layer, when the photographic information regarding said image frames is magnetically recorded;
a printer for recording the photographic information which is read by said photographic information reading means onto said predetermined recording medium; and
a printing item limiter by which, on the basis of the control mark read by said control mark reading means, the printing of any one of or both of the photographic information regarding said entire photographic film and the photographic information regarding said respective image frames is limited.

5,703,674
IMAGE FORMING DEVICE AND METHOD HAVING PLURAL IMAGE PROJECTING PATHS
Tomonori Nishio, Kanagawa, Japan, assignor to Fuji Photo Film Co., Ltd., Kanagawa, Japan
Filed Feb. 24, 1995, Ser. No. 394,258
Claims priority, application Japan, Mar. 10, 1994, 6-040011
Int. Cl.⁶ G03B *27/44*
U.S. Cl. 355—46 **21 Claims**

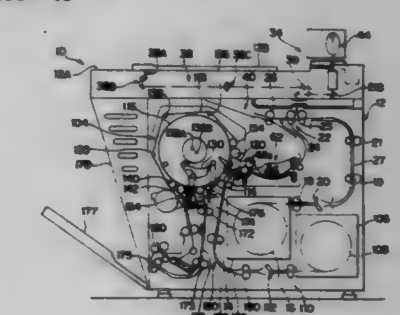

1. An image forming device comprising:
first scanning/exposing means for scanning light, which exits from a first light source, onto a first original of a predetermined size, and for imaging, at an exposure position, light which has one of been reflected at and been transmitted through said first original, thereby exposing an image of said first original onto a photosensitive material;

second scanning/exposing means for scanning light, which exits from a second light source, onto a second original of a predetermined size which is smaller than the predetermined size of said first original, and for imaging, at said exposure position, light which has been transmitted through said second original and enlarging optical means, thereby enlarging and exposing an image of said second original onto a photosensitive material;

reading means, on which the light transmitted through said second original is incident, for reading densities of the image of said second original per pixel; and

control means, when the image of said second original is to be exposed onto the photosensitive material, for causing the light which exits from said second light source to be scanned one or more times onto said second original, and causing said reading means to read the image of said second original, and determining exposure conditions on the basis of the densities of the respective pixels of the image of said second original which densities were read by said reading means, and causing said second scanning/exposing means to expose the image of said second original onto the photosensitive material in accordance with determined exposure conditions.

5,703,675

PROJECTION-EXPOSING APPARATUS WITH DEFLECTING GRATING MEMBER

Shigeru Hirukawa, Kashiwa; Naomasa Shiraishi, Kawasaki, and Masaomi Kameyama, Tokyo, all of Japan, assignors to Nikon Corporation, Tokyo, Japan

Continuation of Ser. No. 288,162, Aug. 10, 1994, abandoned, which is a continuation of Ser. No. 3,423, Jan. 12, 1993, abandoned. This application Jun. 7, 1995, Ser. No. 476,908

Claims priority, application Japan, Jan. 17, 1992, 4-6406; Feb. 4, 1992, 4-19140; May 21, 1992, 4-128368; May 29, 1992, 4-138982; Jul. 1, 1992, 4-174097

Int. Cl.⁶ G03B *27/42;27/54*

U.S. Cl. 355—53 **26 Claims**

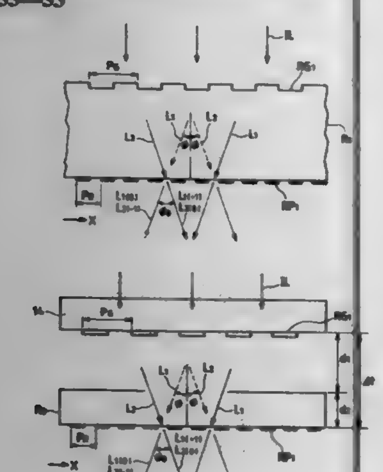

1. A projection exposure apparatus comprising:

an illumination optical system for applying illuminating light from a light source onto a mask;

a projection optical system for projecting an image of a pattern on said mask onto a photosensitive substrate; and

a diffraction grating plate disposed on the light source side and remote from the pattern on said mask by a distance Δt, wherein the following condition is established:

$$\Delta t \geqq P_G/2NA_{IL}$$

wherein

P_G: pitch of said diffraction grating plate,

NA_{IL}: numerical aperture of said illumination optical system.

5,703,676

ZOOM LENS SYSTEM FOR A PHOTOGRAPHIC COPIER

Markus Mueller, Munich, Germany, assignor to Agfa-Gevaert AG, Leverkusen, Germany

Filed Sep. 11, 1995, Ser. No. 526,844

Claims priority, application Germany, Sep. 20, 1994, 44 33 532.6

Int. Cl.⁶ G03B *27/54;27/40*

U.S. Cl. 355—56 **42 Claims**

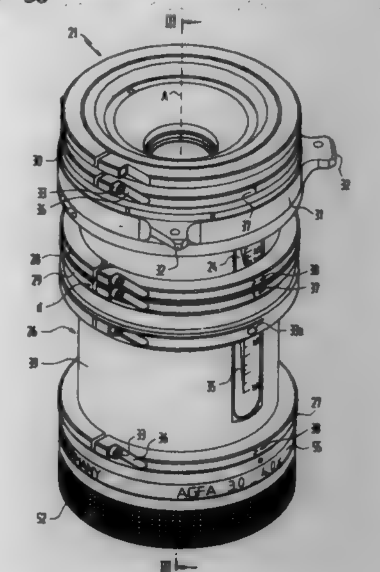

1. A lens system, comprising support means; a mounting member for said support means, said mounting member being shiftable between a plurality of locations of said support means, and said support means being provided with first threads, said mounting member being provided with second threads which mesh with said first threads; first lens means on said support means; second lens means on said support means movable relative to said first lens means; and a pair of abutments for limiting displacement of said second lens means, at least one of said abutments being shiftable between a plurality of locations of said support means.

5,703,677

SINGLE LENS RANGE IMAGING METHOD AND APPARATUS

Eero Simoncelli, and Hany Farid, both of Philadelphia, Pa., assignors to The Trustees of the University of Pennsylvania, Philadelphia, Pa.

Filed Nov. 14, 1995, Ser. No. 557,527

Int. Cl.⁶ G01C *3/08*

U.S. Cl. 356—4.04 **10 Claims**

1. A single lens range sensor for determining range information, comprising:

(a) a lens;

(b) an optical sensor constructed and arranged to sense optical energy travelling from a visual scene through said lens;

(c) at least one optical mask for alternately providing first and second mask functions for masking said sensor to prevent a portion of said optical energy from reaching said sensor, said mask functions being based on at least a differentiable function and a derivative of said differentiable function; and

(d) range determination means for forming an aperture derivative image of an object in said visual scene, and for determin-

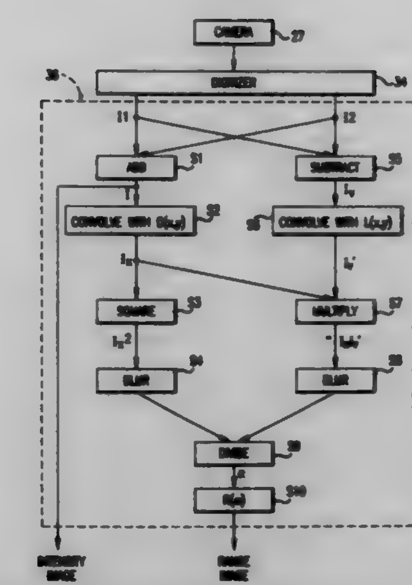

ing the range of said object on the basis of at least said aperture derivative image.

5,703,678

SELF-CALIBRATING PRECISION TIMING CIRCUIT AND METHOD FOR A LASER RANGE FINDER

Jeremy G. Dunne, Littleton, Colo., assignor to Laser Technology, Inc., Englewood, Calif.

Continuation of Ser. No. 375,941, Jan. 19, 1995, Pat. No. 5,574,552. This application Sep. 23, 1996, Ser. No. 717,635

Int. Cl.⁶ G01C *3/08;* **G01S** *13/08;* **G01P** *3/36*

U.S. Cl. 356—5.05 **35 Claims**

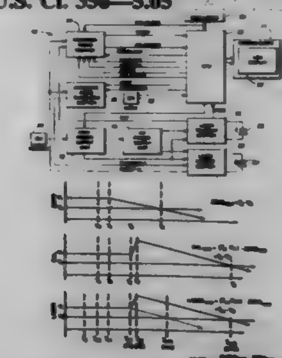

1. A method for determining a range to a target based upon a flight time of a pulse toward said target, said method comprising the steps of:

initially establishing first and second reference signal levels;

firstly unclamping said second reference signal level to allow said second reference signal level to approach, at a first rate, said first reference signal level;

measuring a first reference time $T1_{ref}$ from said step of firstly unclamping until said first and second reference signal levels are equal;

re-establishing said first and second reference signal levels;

secondly unclamping said second reference signal level and ramping said second reference signal level, at a second rate, for a predetermined period of time to establish a third reference signal level;

allowing said third reference signal level to approach, at said first rate, to said first reference signal level;

secondly measuring a second reference time $T2_{ref}$ from said step of secondly unclamping until said first and third reference signal levels are equal;

again re-establishing said first and second reference signal levels;

thirdly unclamping said second reference signal level;

again ramping said second reference signal level, at said second rate, for a period of time related to said flight time of said pulse to said target, to establish a fourth reference signal level;

again allowing said fourth reference signal level to approach, at said first rate, said first reference signal level;

thirdly measuring a third reference time $T3_{ref}$ from said step of thirdly unclamping until said first and fourth reference signal levels are equal; and

computing said range to said target as proportional to $(T3_{ref}-T1_{ref})/(T2_{ref}-T1_{ref})$.

5,703,679

TRANSCEIVER HEAD FOR LONGITUDINAL DOPPLER SPEED INDICATOR

Bertrand Morbieu, Bordeaux, France, assignor to Sextant Avionique, France

Filed Sep. 22, 1995, Ser. No. 532,323

Claims priority, application France, Sep. 22, 1994, 94 11308

Int. Cl.⁶ G01P *3/36*

U.S. Cl. 356—28.5 **11 Claims**

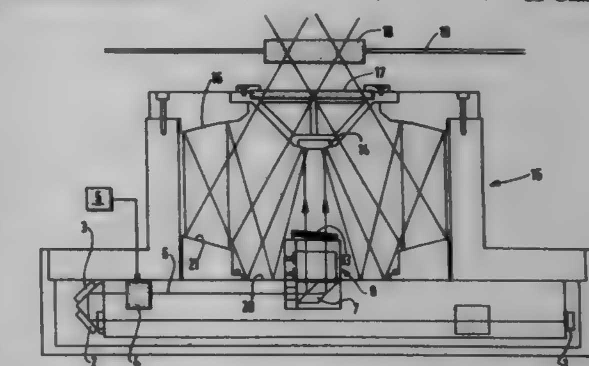

1. A transceiver head for a longitudinal laser speed indicator with at least one pair of measuring axes, comprising:

a laser;

a polarization switching means on the path of the laser beam that comes from said polarization switching means, wherein said polarization separating means are arranged such that said beam which comes from said separating means is moved parallel to itself during switching, with output optics being arranged to direct said beam to one of said measuring axes depending upon its movement; and

control means for switching said switching means from one state to another to direct said beam alternately to one measuring axis and then to another depending upon its polarization state.

5,703,680

METHOD FOR DYNAMIC INTERFERENCE PATTERN TESTING

William Frank Dunn, Stow; John Michael Maloney, Medina; Michael Lynn Hooper, Akron, and Wayne David Mass, Copley, all of Ohio, assignors to The Goodyear Tire & Rubber Company, Akron, Ohio

Filed Jan. 16, 1996, Ser. No. 586,525

Int. Cl.⁶ G01B *9/02*

U.S. Cl. 356—35.5 **14 Claims**

1. A method of detecting anomalies in a distortable object comprising the steps of:

(a) illuminating said object with single phase monochromatic light which is separated into at least two different beams

(b) causing said object to distort by percussion, abrasion or expansion

(c) observing the interference patterns created by reconstruction of the light beams on the object dynamically as the object distorts and

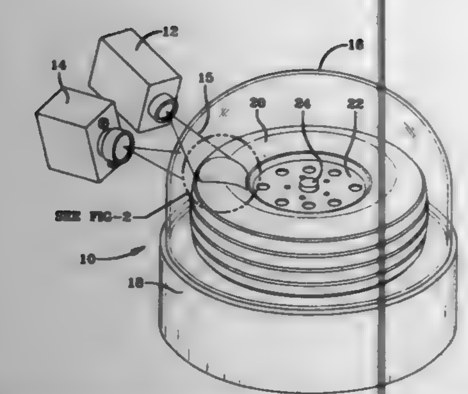

(d) analyzing stress patterns revealed by the interference patterns.

5,703,681
CARRIER AND ITS USE IN THE PREPARATION OF SAMPLES FOR SPECTROSCOPY
Robert A. Hoult, Beaconsfield, England, assignor to Perkin-Elmer LTD, Beaconsfield, England
Filed Nov. 19, 1996, Ser. No. 753,022
Claims priority, application European Pat. Off., Nov. 20, 1995, 95308277
Int. Cl.[6] G01N *1/04;1/28;21/35*
U.S. Cl. 356—36 **9 Claims**

1. A method of forming a sample of solid material for purposes of spectroscopic analysis, comprising the steps of:
providing a carrier including a layer of an abrasive material, said layer being coated with a relatively thin coating of a highly reflective material; and
abrading the solid material with the carrier to deposit a quantity of the solid material on the thin coating on the carrier.

5,703,682
METHOD FOR MONITORING FIBER OPTIC CABLE
Hossein Eslambolchi, 24 Hartley La., Basking Ridge, N.J. 07920
Filed Oct. 25, 1996, Ser. No. 738,371
Int. Cl.[6] G01N *21/00*
U.S. Cl. 356—73.1 **6 Claims**

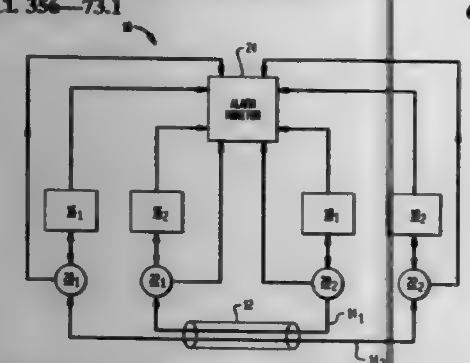

1. Within a system comprising at a plurality of pairs of first and second pieces of equipment, each pair of pieces of equipment coupled by one of a plurality of fibers in at least one fiber optic cable, a method for monitoring said cable, the method comprising the steps of:
detecting if each of the first and second pieces of equipment of each pair is operational, and if not setting an indicator to designate the inoperability of said piece of equipment;
simultaneously monitoring each fiber in each cable associated with a pair of first and second pieces of equipment;
determining whether multiple fibers in one of cables has failed under the condition when no indicator is designated for either of the first and second pieces of equipment of the pair associated with one of said multiple failed fibers, and if so
generating an alarm condition indicating possible stress to the fiber optic cable associated with microbending.

5,703,683
EXTRUDED WOBBLE PLATE OPTICAL ALIGNMENT DEVICE
William C. Hunt, Boulder, and Torin T. Meyers, Thornton, both of Colo., assignors to Ohmeda Inc., Liberty Corner, N.J.
Filed May 28, 1996, Ser. No. 653,963
Int. Cl.[6] G01J *3/44;* **G02B** *7/198;* **H01S** *3/086*
U.S. Cl. 356—301 **29 Claims**

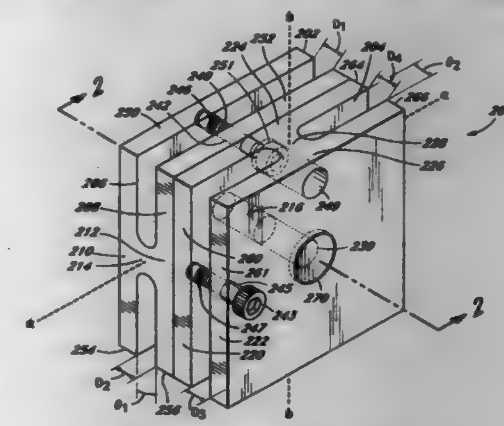

1. An optical alignment device comprising:
a first "H" shaped web structure comprising: first and second flanges extending from a first web having a first flexure axis; a first aperture extending through said first "H" shaped web structure; and a first adjusting element connecting said first and second flanges such that operation of said first adjusting element produces an angular displacement about said first flexure axis of said first flange with respect to said second flange; and
a second "H" shaped web structure comprising: third and fourth flanges extending from a second web having a second flexure axis; a second aperture extending through said second "H" shaped web structure; and a second adjusting element connecting said third and fourth flanges such that operation of said second adjusting element produces an angular displacement about said second flexure axis of said third flange with respect to said fourth flange; wherein said first and second "H" shaped web structures are joined together such that said first and second flexure axes are substantially perpendicular and said first and second apertures are substantially aligned.

5,703,684
APPARATUS FOR OPTICAL DIFFERENTIAL MEASUREMENT OF GLIDE HEIGHT ABOVE A MAGNETIC DISK
Huizong Lu, Coconut Creek, and Ali Reza Taheri, Boca Raton, both of Fla., assignors to International Business Machines Corporation, Armonk, N.Y.
Filed Sep. 23, 1996, Ser. No. 710,818
Int. Cl.[6] G01B *9/02*
U.S. Cl. 356—357 **12 Claims**

1. Inspection apparatus for inspecting a surface of a disk, wherein said apparatus comprises:
means for rotating said disk about a center thereof;
a glide plate movably mounted to extend adjacent said surface of said disk, wherein air dragged by rotation of said disk causes movement of said glide plate;
a reflective surface mounted to move with said guide plate; and

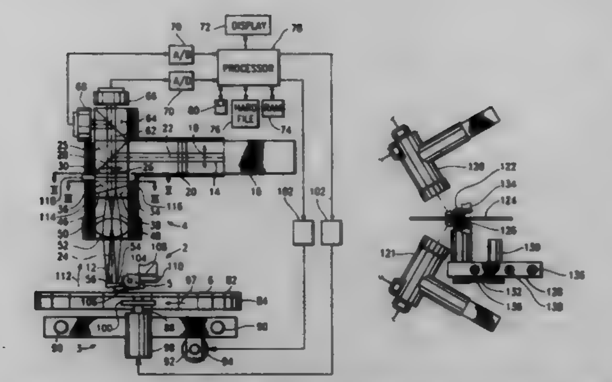

optical means for measuring rotation of said reflective surface in a first pivoting direction wherein said optical means comprises:
a laser producing a coherent, linearly polarized beam;
optical apparatus, wherein said coherent, linearly polarized beam is decomposed into first and second projected sub-beams, with said first projected sub-beam being linearly polarized in a first direction, with said second projected sub-beam being linearly polarized in a second direction, perpendicular to said first direction, wherein said first projected sub-beam is projected to a first test spot on said surface under test, wherein said second projected sub-beam is projected to a second test spot on said surface under test, with said first and second test spots extending along said surface under test in a spaced-apart relationship, wherein said first and second projected sub-beams, after reflection from said first and second test spots, are recombined into single, elliptically polarized return beam;
a polarizing beamsplitter in which said elliptically polarized return beam is split into a first return sub-beam polarized in a third direction and a second return sub-beam, polarized in a fourth direction, perpendicular to said third direction;
a first photodetector measuring intensity of said first return sub-beam;
and a second photodetector measuring intensity of said second return sub-beam;
wherein a portion of said optical means is rotatable about an optical axis extending perpendicular to said reflective surface to measure rotation of said reflective surface in a second direction, perpendicular to said first pivoting direction.

5,703,685
ALIGNMENT METHOD
Shinya Senda, Kawasaki, and Hiroshi Haraguchi, Tokyo, both of Japan, assignors to Kabushiki Kaisha Toshiba, Kawasaki, Japan
Continuation of Ser. No. 181,462, Jan. 14, 1994, abandoned.
This application Jul. 20, 1995, Ser. No. 508,879
Claims priority, application Japan, Mar. 5, 1993, 5-045088
Int. Cl.[6] G01B *11/00*
U.S. Cl. 356—401 **19 Claims**

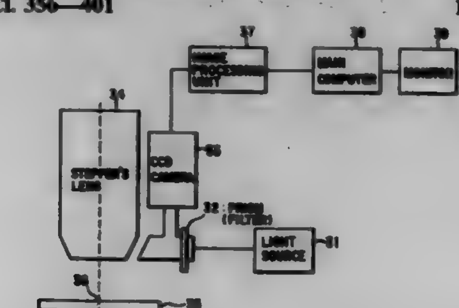

1. An alignment method for controlling an exposure position of a wafer comprising the steps of:
generating light having multiple wavelengths;
directing the light to the wafer through a filter;
directing a plurality of wavelengths of reflected light from the wafer to a CCD camera;
generating a wafer image by the CCD camera, the wafer image being composed of three colors;
transferring the wafer image as a video signal from the CCD camera to an image processing unit, the video signal being composed of three colors;
processing the wafer image from the image processing unit the video signal by a computer to establish the location of an alignment mark on the wafer utilizing a contrast between a portion of the wafer with the alignment mark and a portion of the wafer without the alignment mark; and
adjusting the position of the wafer to place the alignment mark in a predetermined position.

5,703,686
DEVICE FOR COLORIMETRIC MEASUREMENT OF A DISPLAY SCREEN
Thierry Leroux, Oustreham, France, assignor to Eldim, France
Filed Jan. 5, 1996, Ser. No. 583,230
Claims priority, application France, Jan. 6, 1995, 95 00118
Int. Cl.[6] G01J *3/51*
U.S. Cl. 356—418 **5 Claims**

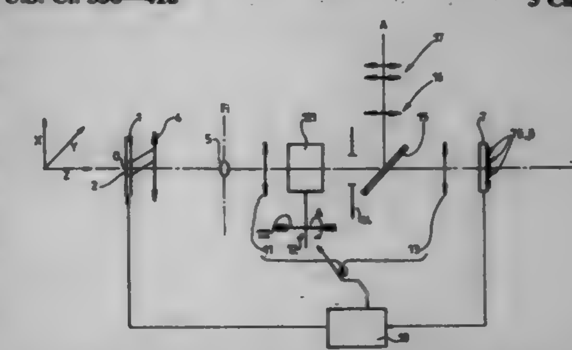

1. A colorimetric measurement device for determining the luminance and the colorimetric coordinates of an elementary surface of a display screen along the observation direction of the elementary surface, said device comprises:
a first converging lens collecting light beams and forming an image of a Fourier transform of the elementary surface in an image focal plane of the first converging lens, the light beams having a direction of propagation and defining a path,
a second converging lens projecting the image of the transform onto a sensor formed by a set of detector distributed in a matrix, each of the detectors producing an electric signal proportional to the light intensity of the elementary surface,
a diaphragm situated in the path of the light beams and defining an aperture,
a circuit for processing the electric signal produced by each of the detectors to determine contrast values,
wherein the second lens is an optical system comprising, in the direction of propagation of the beams:
an input lens,
a colour filter,
an output lens,
the input lens, located after the image plane of the first lens, converting the beams into parallel beams for passing through the colour filter,
the colour filter being formed by a set of filter, each filter of the set of filters is associated with an analysed colour and is placeable in the path of the light beams at the exit of the input lens,
the output lens located downstream of the colour filter, receiving the parallel beams leaving the filter and focussing them onto the detectors, and
the circuit controls the switching of the colour filters.

5,703,687

METHOD AND APPARATUS FOR INSPECTING THE OUTER APPEARANCE OF A SPHERICAL ARTICLE

Hiroki Kumagai, and Fumio Fukazawa, both of Chichibu, Japan, assignors to Bridgestone Sports Co., Ltd., Tokyo, Japan

Filed Aug. 27, 1996, Ser. No. 703,695

Claims priority, application Japan, Aug. 28, 1995, 7-242483

Int. Cl.⁶ G01N *21/88*

U.S. Cl. 356—426 **14 Claims**

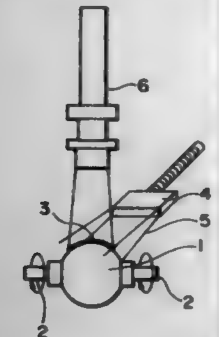

1. A method for inspecting the outer appearance of a spherical article, comprising the steps of:

illuminating light to a selected position on the spherical surface of the spherical article in a tangential direction,

rotating the spherical article in line with the light illuminating direction,

operating a line sensor camera to take a line image of the spherical surface in the vicinity of the selected position and along a line perpendicular to the light illuminating direction, the line sensor camera delivering image data,

constructing a two-dimensional image from the image data, and

detecting an abnormal brightness change which appears in the two-dimensional image as a result of an undesirable protrusion on the spherical surface shutting out the light, thereby detecting the presence of the undesirable protrusion.

5,703,688

METHOD AND APPARATUS FOR INSPECTING AND GRADING GARMENTS

Cecil Roland Bell, Pinnacle, N.C., assignor to Monarch Knitting Machinery Corporation, Glendale, N.Y.

Continuation-in-part of Ser. No. 371,810, Jan. 12, 1995, Pat. No. 5,497,235. This application Mar. 4, 1996, Ser. No. 610,408

Int. Cl.⁶ G01N *21/84;21/04*

U.S. Cl. 356—430 **34 Claims**

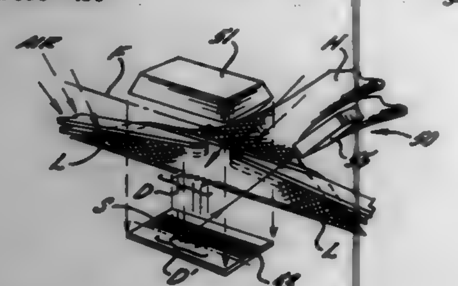

1. A garment inspecting and grading apparatus for inspecting a garment, the apparatus comprising:

means for mounting a garment thereon, said mounting means being formed of translucent material;

optical inspecting means positioned adjacent said mounting means for inspecting predetermined portions of a garment mounted on said mounting means, said optical inspecting means including at least one light emitter positionally aligned with a portion of said mounting means to emit light through a predetermined portion of a garment mounted thereon and at least one light detector positionally aligned with said at least one light emitter and the portion of said mounting means to detect either the presence or absence of light traveling from said light emitter and through the predetermined portion of a garment article mounted on said mounting means so that presence and absence of defects in a garment are thereby determined; and

means positioned downstream from said mounting means and said optical inspecting means and in electrical communication with said optical inspecting means for grading and sorting a garment into one of a plurality of predetermined quality groups responsive to the presence or absence of defects detected by said optical inspecting means.

5,703,689

OPTICAL SPECTROMETER

Ronald Allan Powell, Redwood City, Calif., assignor to Varian Associates, Inc., Palo Alto, Calif.

Filed Jun. 11, 1996, Ser. No. 664,284

Int. Cl.⁶ G01N *21/00*

U.S. Cl. 356—432 **4 Claims**

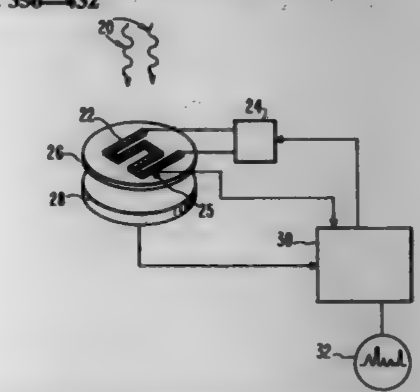

1. The method for determining the spectrum of incident radiation comprising the steps of

(a) providing at least one layer of material, said material having a band gap energy, said layer being deposited onto a transparent substrate having a thickness sufficient to absorb all incident radiation above the band gap energy,

(b) controllably heating said layer in order to impose a temperature gradient across said material while projecting incident radiation through said layer,

(c) measuring the intensity of a portion of said incident radiation transmitted through said layer as a function of said temperature gradient across said material,

(d) differentiating said intensity with respect to temperature to obtain the differential intensity as a function of wavelength.

5,703,690

OPTICAL GRANULOMETER FOR MEASURING THE CONCENTRATION OF PARTICULATE PRESENT IN A FLUID AT LOW STANDARD CONCENTRATIONS

Umberto Perini; Paolo Martinelli; Elena Golinelli; Sergio Musazzi; Franco Trespidi, and Nice Pintus, all of Pisa, Italy, assignors to Enel S.p.A., Rome, Italy

Filed Jun. 17, 1996, Ser. No. 664,833

Claims priority, application Italy, Jun. 15, 1995, MI95A1286

Int. Cl.⁶ G01N *21/00*

U.S. Cl. 356—436 **4 Claims**

1. An optical granulometer for measuring the concentration of particulate present in a fluid at low concentration standards, that uses a measuring laser beam to illuminate the particulate, by means of the measurement of the distribution of the light diffused by the particulate and gathered by a collecting lens with a focal length

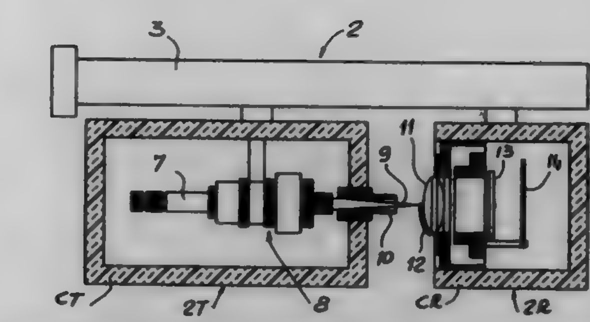

characterized in that the measuring laser beam is a converging laser beam focused on a laser opaque shell that partly covers said collecting lens.

5,703,691

INTEGRATED DETECTOR FOR LASER REMOTE SENSORS

Louis F. Klaras, Redondo Beach, and David B. Cohn, Torrance, both of Calif., assignors to Hughes Electronics, Los Angeles, Calif.

Continuation of Ser. No. 496,739, Jun. 29, 1995, abandoned, which is a continuation of Ser. No. 164,593, Dec. 9, 1993, abandoned. This application Mar. 5, 1996, Ser. No. 610,983

Int. Cl.⁶ G01N *21/61*

U.S. Cl. 356—437 **13 Claims**

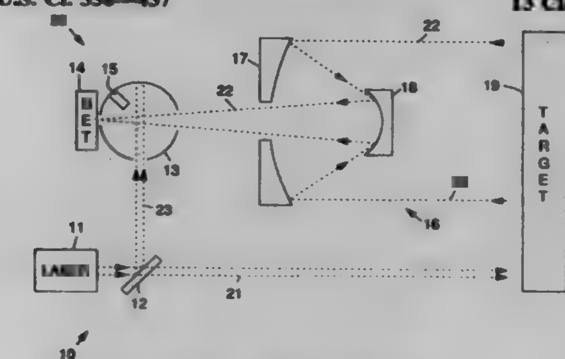

1. A remote laser sensor apparatus comprising:

a pulsed laser for transmitting a pulse of laser energy at a predetermined wavelength;

a beamsplitter for directing respective portions of the pulse of laser energy along a first path and a second path, the first path directing the pulse of laser energy toward a target;

a telescope for collecting and focusing a reflected portion of the pulse of laser energy having been reflected from the target;

a single detector system comprising an integrating sphere, the integrating sphere directing the reflected portion of the pulse of laser energy having been collected and focused and the respective portion of the pulse of laser energy having been directed along the second path into a single optical path, and a single detector coupled to the single optical path for serially detecting the reflected portion of the pulse of laser energy and the respective portion of the pulse of laser energy having been directed along the second path, the pulse of laser energy having a prescribed pulse duration, the first path having a first prescribed path length and the second path having a second prescribed path length such that serial detection of the reflected portion of the pulse of laser energy and the respective portion of the pulse of laser energy having been directed along the second path is achieved.

5,703,692

LENS SCATTEROMETER SYSTEM EMPLOYING SOURCE LIGHT BEAM SCANNING MEANS

John R. McNeil; S. Sohail H. Naqvi, and Scott R. Wilson, all of Albuquerque, N. Mex., assignors to Bio-Rad Laboratories, Inc., Hercules, Calif.

Filed Aug. 3, 1995, Ser. No. 510,990

Int. Cl.⁶ G01N *21/47;* **G01B** *11/02*

U.S. Cl. 356—445 **30 Claims**

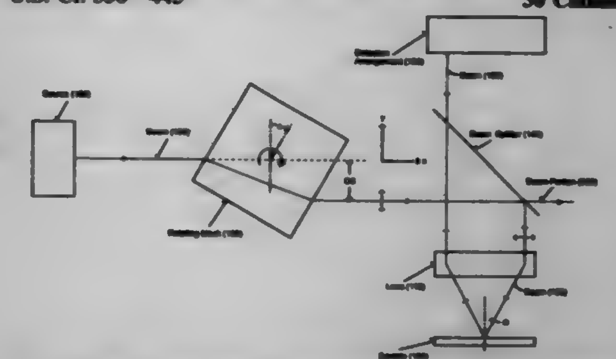

1. An optical scatterometer system for characterizing the diffraction properties of a sample material by varying the angle of incidence of a light beam from a source without moving the sample material, the optical scatterometer comprising:

light source means for transmitting one or more source light beams;

a beam splitter positioned to direct the one or more source light beams diffracted by the sample material;

a lens positioned such that the sample material is located in a back focal plane of the lens, the lens being further positioned to receive the one or more source light beams directed by the beam splitter, to transmit the one or more source light beams to illuminate the sample material, to receive the one or more light beams diffracted by the sample material, and to transmit the one or more light beams diffracted by the sample material to the beam splitter;

one or more detection systems positioned to receive and characterize the one or more light beams diffracted by the sample material; and

beam direction means positioned between the light source means and the beam splitter for scanning the one or more source light beams along a line in an entrance aperture of the lens to thereby direct the one or more source light beams transmitted by the light source means to selected different points along said line in the entrance aperture of the lens.

5,703,693

DIGITAL COPY MACHINE ALLOWING DUPLEX COPYING IN SHORT TIME THROUGH NOVEL RECIRCULATION TIMING

Takeshi Morikawa, Toyokawa, Japan, assignor to Minolta Co., Ltd., Osaka, Japan

Filed Dec. 19, 1994, Ser. No. 358,860

Claims priority, application Japan, May 2, 1994, 6-093508

Int. Cl.⁶ G03G *15/00*

U.S. Cl. 358—296 **26 Claims**

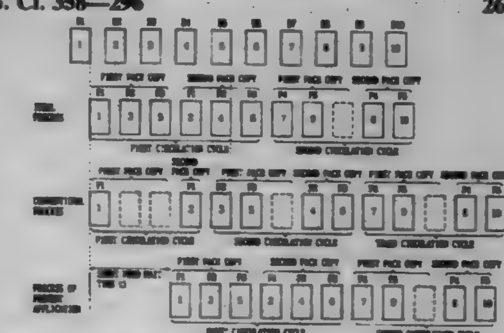

1. An image forming apparatus comprising:
an original tray for holding a plurality of originals,

a platen glass on which an original is mounted for image formation,

automatic original transportation device for sequentially transporting a plurality of originals from said original tray onto said platen glass,

image reading means for reading image of said original mounted on said platen glass for providing digital image corresponding to the density of each pixel in an original image,

a first memory for storing said read image data of said original image,

image formation means for forming an image on a sheet according to said image data read out from said first memory,

a sheet transportation mechanism for circulating a plurality of sheets having an image formed on one side and sequentially refeeding the sheets to an image transfer position,

detection means for detecting the size of a sheet used for image formation,

confirmation means for confirming the number of sheets n ($n \geq 2$) of said sheet size detected by said detection means that can be circulated at one time by said sheet transportation mechanism,

first calculation means for calculating the difference between the time when image formation of the $(2n-1)$th page of an original image can be initiated and the time when the n-th sheet is provided to said image formation position after the first sheet is provided at a normal timing in combine or duplex image formation using at least n sheets, and

first control means for controlling the feeding timing of the first sheet according to the time difference calculated by said calculation means.

5,703,694

IMAGE PROCESSING APPARATUS AND METHOD IN WHICH A DISCRIMINATION STANDARD IS SET AND DISPLAYED

Yoshinori Ikeda, Tokyo; Hiroyuki Ichikawa, Kawasaki; Mitsuru Kurita, Tokyo; Kimiyoshi Hayashi, Soka; Toshio Honma, Kawasaki, and Yoshiko Horie, Tokyo, all of Japan, assignors to Canon Kabushiki Kaisha, Tokyo, Japan

Division of Ser. No. 481,825, Jun. 7, 1995, Pat. No. 5,550,638, which is a continuation of Ser. No. 21,863, Feb. 24, 1993, abandoned, which is a division of Ser. No. 519,448, May 4, 1990, Pat. No. 5,239,383. This application Feb. 13, 1996, Ser. No. 600,361

Claims priority, application Japan, May 10, 1989, 1-117004; May 10, 1989, 1-117017; May 10, 1989, 1-117023

Int. Cl.^{6} H04N *1/00;1/40;1/46;* **G03F** *3/08*

U.S. Cl. 358—296 **18 Claims**

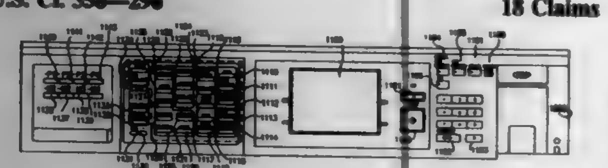

1. An image processing method comprising:

an input step of inputting image data;

a discriminating step of discriminating a type of an image represented by the image data;

a setting step of setting a discrimination standard of said discriminating step; and

a display step of displaying a condition in said setting step.

5,703,695

MULTI-DOT DITHER MATRIX GENERATION

Hugh P. Nguyen, 1353 Cabrillo Ave., San Jose, Calif. 95132

Filed Mar. 20, 1995, Ser. No. 407,444

Int. Cl.^{6} H04N *1/40*

U.S. Cl. 358—298 **12 Claims**

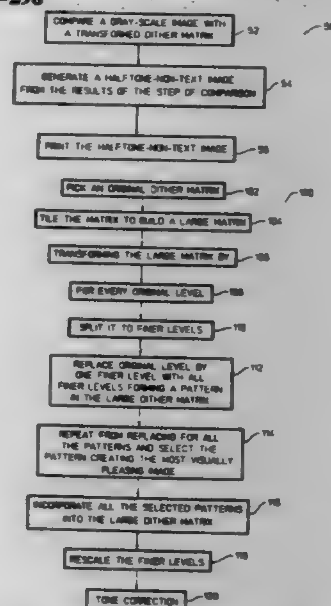

1. A method of generating and printing a halftone-non-text image from a gray-scale non-text image comprising the steps of:

comparing the gray-scale image with a transformed dither matrix;

generating the halftone-non-text image from the results of comparing; and

printing the halftone-non-text image;

wherein the transformed dither matrix is generated by the steps of:

picking an original dither matrix with a number of original levels for printing the image;

tiling a selected number of the original levels of the original matrix to build a large dither matrix;

transforming the large dither matrix by the steps of:

for every original level in the large dither matrix: splitting that level to create a group of finer levels that are in sequence and are all different from each other;

replacing that original level in each of the tiled matrices with a processor by one of the finer levels such that the sequence of finer levels follows a pattern in the large dither matrix;

repeating the step of replacing for all the possible patterns and selecting the pattern that creates the most visually-pleasing image; and

incorporating the selected pattern from each original level into the large dither matrix to form the transformed dither matrix for printing the non-text image.

5,703,696

IMAGE MEMORY APPARATUS

Masanori Sakai, Yokohama; Toshihiro Kadowaki; Naoto Arakawa, both of Kawasaki, and Tetsuya Ohnishi, Yokohama, all of Japan, assignors to Canon Kabushiki Kaisha, Tokyo, Japan

Continuation of Ser. No. 976,665, Nov. 16, 1992, abandoned, which is a continuation of Ser. No. 521,674, May 10, 1990, abandoned. This application Aug. 10, 1994, Ser. No. 288,429

Claims priority, application Japan, May 10, 1989, 1-118467

Int. Cl.^{6} H04N *1/00*

U.S. Cl. 358—404 **24 Claims**

1. An image memory apparatus comprising:

a) means for storing input image information;

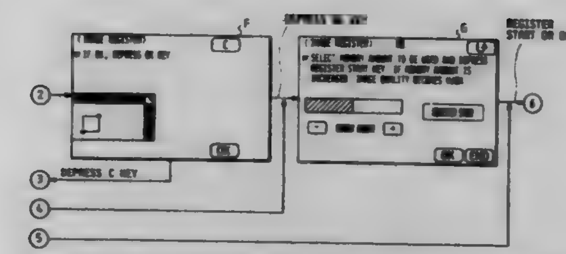

b) first means for manually designating a storing capacity of said storing means for the input image information;

c) second means for manually designating a portion of image area of the input image information;

d) control means for controlling a storing method of said storing means for the input image information in accordance with a manual designation by said first designating means and a manual designation by said second designating means; and

e) display means for displaying the storing capacity designated by said first means and the portion of image data of the input image information, wherein said first means and said second means and said display means operate interactively.

5,703,697

METHOD OF LOSSY DECODING OF BITSTREAM DATA

James Normile, Woodside, Calif., assignor to LG Electronics, Inc., San Jose, Calif.

Filed Mar. 20, 1996, Ser. No. 618,847

Int. Cl.^{6} H04N *1/415*

U.S. Cl. 358—433 **20 Claims**

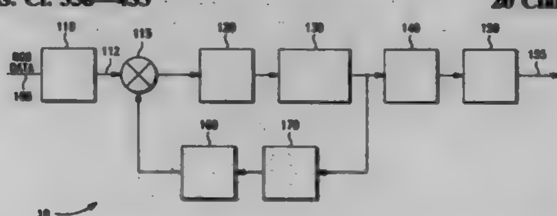

1. A method of lossy decoding of a bitstream data comprising the steps of:

decoding the bitstream data having a plurality of symbols to provide an image stream having a plurality of image blocks;

marking an image block with a first identifier having a spatial position associated with a location when an invalid symbol is encountered;

discarding the bitstream data until a resynchronization code is decoded;

marking the image block associated with the resynchronization code with a second identifier;

decoding the image stream to provide a plurality of display frames having a plurality of display blocks;

comparing the display blocks of a display frame for similarity between the display blocks of a previous display frame to determine display blocks having errors; and

replacing the display blocks having errors with previous display blocks corresponding to a similar spatial position.

5,703,698

APPARATUS AND METHOD FOR FACSIMILE TRANSMISSION OF SYNTHESIZED IMAGES

Takehiro Yoshida, Tokyo, and Shin Tsuda, Yokohama, both of Japan, assignors to Canon Kabushiki Kaisha, Tokyo, Japan

Continuation of Ser. No. 845,159, Mar. 3, 1992, abandoned. This application May 19, 1995, Ser. No. 444,724

Claims priority, application Japan, Mar. 4, 1991, 3-037422; Apr. 3, 1991, 3-098164; Oct. 17, 1991, 3-269424

Int. Cl.^{6} H04N *1/387*

U.S. Cl. 358—435 **27 Claims**

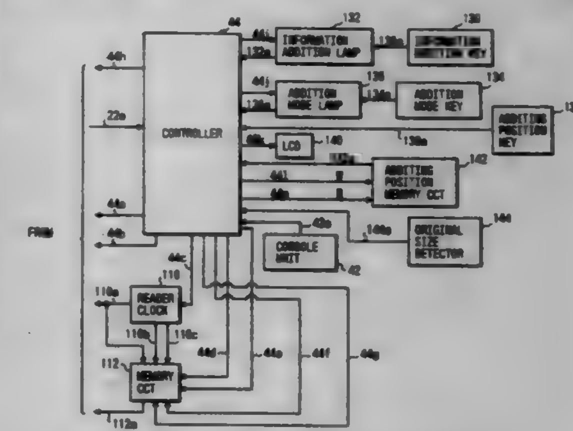

1. An image communication apparatus comprising:

reading means for reading an original image;

memory means for storing a plurality of image information;

selecting means for selecting image information from the plurality of image information stored in said memory means;

synthesizing means for synthesizing the image information selected by said selecting means and other image information read by said reading means; and

sending means for sending the image information synthesized by said synthesizing means,

wherein said selecting means selects the image information in accordance with a time when said sending means starts sending.

5,703,699

METHOD FOR AUTOMATICALLY RECEIVING IMAGE DATA IN FACSIMILE SYSTEM REGARDLESS OF WHETHER SUCH FACSIMILE SYSTEM IS OPERATING IN PRIVATE LINE MODE OR PUBLIC LINE MODE

Sung-Hyun Kim, Gumi, Rep. of Korea, assignor to SamSung Electronics Co., Ltd., Suwon, Rep. of Korea

Filed May 28, 1996, Ser. No. 654,431

Claims priority, application Rep. of Korea, May 27, 1995, 13568/1995

Int. Cl.^{6} H04N *1/32*

U.S. Cl. 358—442 **16 Claims**

1. A method for automatically receiving image data in a facsimile system including a telephone operable in one of a private line mode and a public line mode, said method comprising the steps of:

automatically receiving said image data from a telephone line regardless of whether said facsimile system is operating in one of said private line mode and said public line mode, upon reception of a ring signal responding to an incoming call when said facsimile system has been set in an automatic reception mode, said private line mode indicating that said facsimile system is directly connected to another data transmission system, and said public line mode indicating that said facsimile system is connected to another data transmission system through a public switch telephone network;

forming a voice speech upon detection of a hook-off state of said telephone after said ring signal is received from the telephone line, when said facsimile system has not been set in said automatic reception mode; and

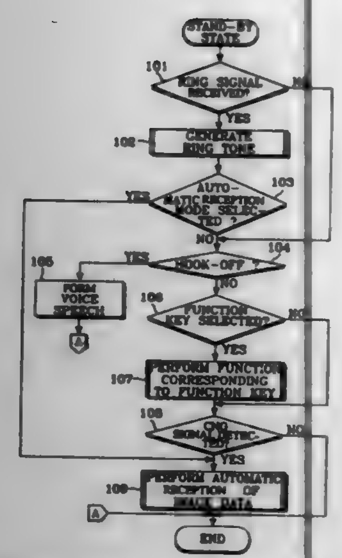

automatically receiving said image data when said ring signal is not received but a calling tone signal is detected from the telephone line.

5,703,700
METHOD OF ENHANCING A PRINT OF A TRANSPARENCY
Klaus Birgmeir, Putzbrunn, and Hermann Waibel, Munich, both of Germany, assignors to Agfa-Gevaert Aktiengesellschaft, Leverkusen, Germany
Continuation of Ser. No. 847,821, Mar. 6, 1992, abandoned. This application Mar. 20, 1995, Ser. No. 406,643
Claims priority, application Germany, Apr. 4, 1991, 41 10 0813.2
Int. Cl.[6] H04N *1/04*
U.S. Cl. 358—487 **28 Claims**

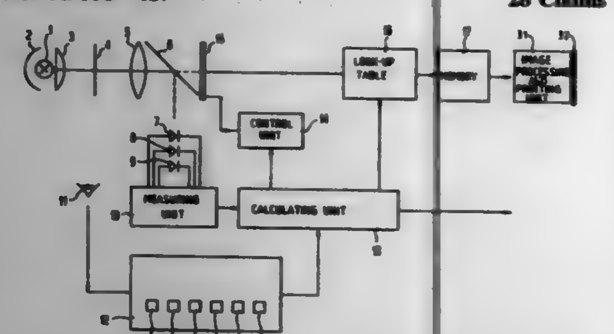

1. A method of copying a master, comprising the steps of scanning said master using a scanning device with a substantially linear scanning range; establishing the actual degree of exposure of at least a portion of said master prior to said scanning step; and controlling the amount of light received by said scanning device or the time during which light is received by said scanning device based on the established actual degree of exposure so that at least one portion of said master which is significant in reproduction of said master is scanned within the linear scanning range, whereby said controlling step comprises fixed exposure or sensitivities of said scanning device and further comprising the steps of generating signals, which represent an image of said master, with said scanning device, and modifying said signals using one of a plurality of fixed families of stored characteristic curves, said plurality of fixed families of stored characteristic curves each is comprised of at least two curve, each of said two curves being generated by photographing the same object under different exposure conditions to generate density signals of the exposed areas said one family being selected on the basis of at least one of a plurality of properties of said master, whereby said fixed exposure or sensitivities of said scanning device are assigned to said fixed families of said characteristic curves.

5,703,701
FILM INFORMATION COMMUNICATION APPARATUS, FILM INFORMATION PRINTING APPARATUS, INFORMATION PROCESSING APPARATUS AND INDEX PRINTER
Yuji Yamamoto, and Masazumi Ishikawa, both of Wakayama, Japan, assignors to Noritsu Koki Co., Ltd., Wakayama, Japan
Filed Mar. 14, 1995, Ser. No. 403,951
Claims priority, application Japan, Mar. 15, 1994, 6-043816; Mar. 16, 1994, 6-045919; Mar. 23, 1994, 6-051796
Int. Cl.[6] H04N *1/04*
U.S. Cl. 358—487 **11 Claims**

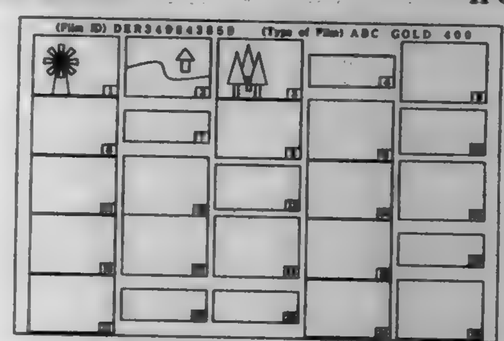

1. A film information printing apparatus comprising:
at least one mechanism for reading optically readable information preliminarily recorded in a photosensitive emulsion layer in a photographic film including a photosensitive emulsion layer and a magnetic recording layer, and mechanism for reading information preliminarily recorded in the magnetic recording medium;
a recording paper printing mechanism for printing the recorded information read by the reading mechanism of the film information on a recording paper;
a paper priming mechanism for printing information read by the reading mechanism of film information on a reverse side and/or surface of the printed and developed paper; and wherein the apparatus further includes:
a frame number detecting mechanism for detecting a film frame number preliminarily printed on a reverse side of a paper on which a picture is printed and developed, and
a retrieval mechanism for retrieving information from the reading mechanism of film information according to the frame number read by the frame number detecting mechanism,
wherein the paper printing mechanism is designed to print the information retrieved by the retrieval mechanism on the reverse side and/or surface of the paper of the corresponding frame number.

5,703,702
HOLOGRAPHIC SYNTHESIS
Patrick E. Crane, and Ronnie C. Lau, both of 6101 Johns Rd., Ste. 6, Tampa, Fla. 33634
Filed Sep. 8, 1993, Ser. No. 117,708
Int. Cl.[6] G03H *1/08;1/10*
U.S. Cl. 359—1 **20 Claims**

1. Apparatus for generating holograms comprising an array of individual controlled energy-emitting elements, an exciter spaced from the elements for in-phase exciting of the elements for emitting an overall holographic image from combined individual

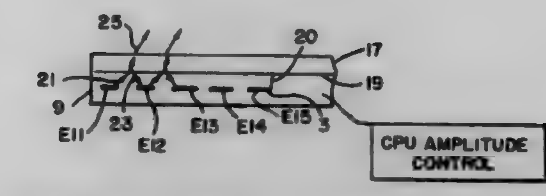

in-phase energies emitted by the individually controlled energy-emitting elements.

5,703,703
HOLOGRAPHIC ORNAMENT
Takashi Yamate, Matsusaka, Japan, assignor to Central Glass Company, Limited, Yamaguchi, Japan
Continuation of Ser. No. 75,244, Jun. 11, 1993, abandoned. This application Jun. 7, 1995, Ser. No. 478,577
Claims priority, application Japan, Jun. 12, 1992, 4-040359
Int. Cl.[6] G02B *5/32*
U.S. Cl. 359—1 **4 Claims**

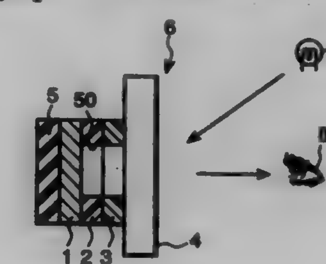

1. A holographic ornament consisting essentially of
a hologram of reflection type having an operative surface by and on which an external light is diffused and reflected;
an opaque tape covering said operative surface of said hologram, said opaque tape being formed with at least one through cut through which the operative surface of the hologram is exposed, said through cut being shaped into a letter;
a transparent base-member which covers said opaque tape, said transparent base member being constructed to be a structural base of the holographic ornament;
a protection tape bonded to a back surface of said hologram;
a transparent double-coated adhesive tape member by which said transparent base member and said opaque tape member are bonded to each other.

5,703,704
STEREOSCOPIC IMAGE INFORMATION TRANSMISSION SYSTEM
Akira Nakagawa; Eishi Morimatsu; Makiko Konoshima, and Kiichi Matsuda, all of Kawasaki, Japan, assignors to Fujitsu Limited, Kawasaki, Japan
Continuation of Ser. No. 88,347, Jul. 9, 1993, abandoned. This application Jan. 25, 1996, Ser. No. 591,915
Claims priority, application Japan, Sep. 30, 1992, 4-262069
Int. Cl.[6] G03H *1/08;1/26;* **H04N** *1/415;7/12*
U.S. Cl. 359—9 **16 Claims**

1. A stereoscopic image information transmission system having a transmission side and a reception side connected by a transmission line, comprising:
an image information processing means, at the transmission side, for both coding at the transmission side three-dimensional image information or multiple-lens image information to be transmitted and generating an interference fringe information corresponding to the said three-dimensional image information or multiple-lens image information to be reproduced at the reception side, based on a conversion rule which is one selected from a cosine transformation or a sine transformation effective for image compression;

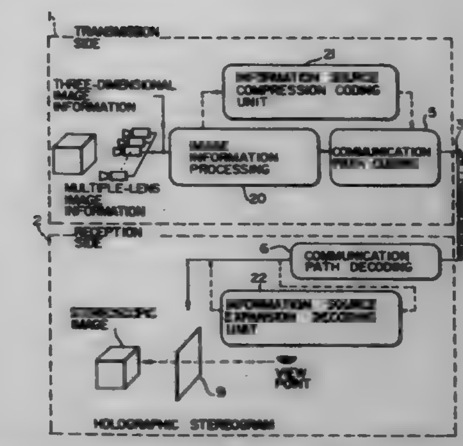

communication path coding means, at the transmission side, receiving the output from said image information processing means, for producing band compressed output information to the transmission line;
a communication path decoding means, at the reception side, for receiving through the transmission line the band compressed output information and restoring it to the original band;
said stereoscopic image information transmission system excluding any information source decoding means at the reception side since information output from the communication path decoding means constitutes the stereoscopic image information to be loaded on a holographic stereogram.

5,703,705
TILT MULTIPLEX HOLOGRAPHY
Kevin Curtis, Chatham, and William Larry Wilson, Somerville, both of N.J., assignors to Lucent Technologies Inc., Murray Hill, N.J.
Filed May 5, 1995, Ser. No. 435,706
Int. Cl.[6] G03B *1/26;1/28;* **G11B** *11/12;7/007*
U.S. Cl. 359—22 **33 Claims**

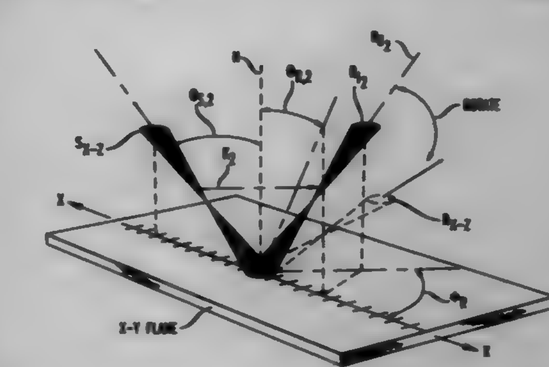

1. Process for shift holography in which an array of holograms is recorded in a recording medium defining the x-y plane, the array consisting of holograms each produced by interference of a reference beam and a signal beam together defining a plane of incidence, and each consisting of a multiplicity of holographic grating vectors having a predominant grating vector direction in the x-y plane, the array consisting of successive rows of partially overlapping holograms produced by movement of the recording medium relative to the beams in the shift direction, thereby defining the x-direction, with successive rows produced by movement in the direction orthogonal to the shift direction, thereby defining the y-direction, whereby partially overlapping holograms may be individually read out using Bragg selection,
CHARACTERIZED IN THAT
the line of interception of the plane of incidence and the x-y plane is non-coincident with the shift direction, and diverges by a divergence angle as measured in the x-y plane, whereby a grating vector component is introduced

into the y-direction, thereby permitting first-order Bragg selectivity in the y-direction and serving for selection of partially overlapping holograms in the y-direction.

5,703,706

SPECTRAL MODIFICATION THROUGH PHASE MODULATION WITH SPATIAL EXTENT

James N. Eckstein, Cupertino; Majid L. Riazint, San Jose, and Gary F. Virshup, Cupertino, all of Calif., assignors to Varian Associates, Inc., Palo Alto, Calif.

Division of Ser. No. 307,222, Sep. 16, 1994, Pat. No. 5,517,346. This application Jan. 11, 1996, Ser. No. 585,128

Int. Cl.^{6} H04J *14/02*

U.S. Cl. 359—125 **1 Claim**

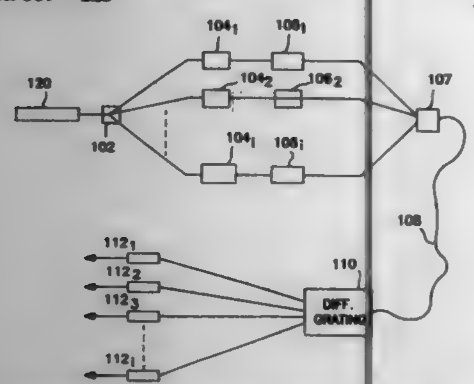

1. A multichannel optical communication system comprising
(a) a source of optical solitons of selected wavelength,
(b) a multiplexer for separating a plurality of trains of solitons from said source,
(c) a plurality of wavelength shifters, each said wavelength shifter operative upon a corresponding train of solitons to shift the wavelength of said train of solitons to a desired value,
(d) a plurality of modulation means, each said modulation means operative upon a corresponding train of solitons to vary the amplitude of the solitons thereof whereby information is impressed upon said train of solitons,
(e) demultiplexer means for recombining said plurality of trains of solitons to propogate over an optical fiber,
(f) wavelength dispersive means for receiving said plurality of trains of solitons and directing solitons of like wavelength to propagate over one of a corresponding plurality of optical paths.

5,703,707

HIGH CAPACITY SWITCHING MATRIX

Marc Dieudonne, Igny, and Philippe Perrier, Velizy-Villacoublay, both of France, assignors to Alcatel Cit, Paris, France

Filed Jun. 13, 1996, Ser. No. 661,775

Claims priority, application France, Jun. 14, 1995, 95 07070

Int. Cl.^{6} H04J *14/02*

U.S. Cl. 359—128 **2 Claims**

1. Switching matrix including:
N input functional modules each having one input and N outputs;
N output functional modules each having N inputs and one output;
a broadcast network having N^2 inputs connected to the N^2 outputs of the input functional modules and N^2 outputs connected to the N^2 inputs of the output functional modules to broadcast simultaneously N signals from each input functional module to each output functional module;
wherein said broadcast network includes:

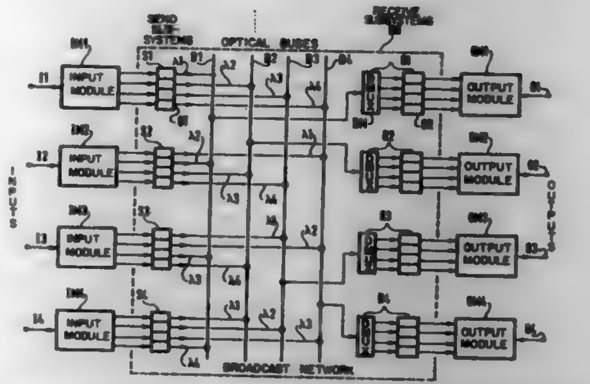

N send subsystems each including means for sending N optical carriers at different wavelengths λ_i where i=1, . . . , N, respectively modulated by N signals from an input functional module;
N receive subsystems each including means for receiving N optical carriers at said wavelengths, extracting N signals modulating the respective carriers and forwarding them to an output functional module; and
N optical buses each coupled to a respective input of a receive subsystem and each coupled to a respective send subsystem so that the jth bus, for j=1 through N, receives from the kth send subsystem the carriers at the wavelengths:
$\lambda_{1-k(\mathrm{modulo}\ N)}, \ldots, \lambda_{N-k(\mathrm{modulo}\ N)}$.

5,703,708

ADJUSTABLE OPTICAL DELAY LINE

Chandan Das, Gauting; Ulrich Gaubatz, Munich, and Erich Gottwald, Holzkirchen, all of Germany, assignors to Siemens Aktiengesellschaft, Munich, Germany

Filed Jan. 5, 1996, Ser. No. 583,656

Claims priority, application Germany, Jan. 23, 1995, 195 01 919.9

Int. Cl.^{6} H04J *14/08*

U.S. Cl. 359—140 **19 Claims**

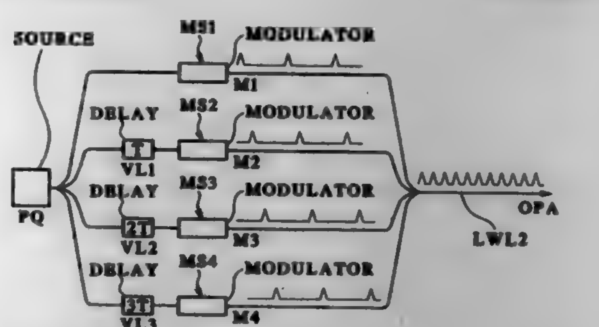

9. A multiplexer for optical digital signals, comprising:
optical delay lines each having a line input and a line output and having a variable delay;
each of said optical delay having a light waveguide connected between the line input and the line output and having a device for adjusting and controlling the temperature of the light waveguide;
a source of optical pulses that are comparatively short compared to a repetition rate of the optical pulses;
a first modulator connected to the source of optical pulses;
a series circuit of a first optical delay line and a second modulator connected to said source of optical pulses;
a delay of the first optical delay line corresponding to a bit period of the optical digital signals;
outputs of the first and second modulators being operatively connected to a common light waveguide connected to an optical output of the multiplexer;

the optical delay line and the modulator being interchangeable in a respective series circuit;
the waveguide and coil body being arranged in a heatable liquid.

5,703,709

METHOD AND DEVICE FOR COLOR LASER MARKING

Akira Mori, Chigasaki; Shigeki Hagiwara, and Hirokazu Tanaka, both of Hiratsuka, all of Japan, assignors to Komatsu Ltd., Tokyo, Japan

PCT No. PCT/JP94/02054, § 371 Date Jun. 10, 1996, § 102(e) Date Jun. 10, 1996, PCT Pub. No. WO95/15833, PCT Pub. Date Jun. 15, 1995

PCT Filed Dec. 7, 1994, Ser. No. 652,518

Claims priority, application Japan, Dec. 10, 1993, 5-341715

Int. Cl.^{6} G02B *26/08*

U.S. Cl. 359—196 **8 Claims**

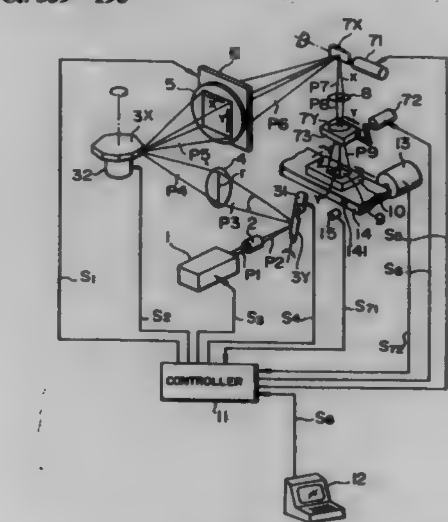

1. A method of laser marking a surface of a workpiece with a plurality of colors, said method comprising:
displaying a pattern on a mask which selectively passes a laser beam incident thereto;
generating a laser beam;
directing the thus generated laser beam through said mask and an optical system onto a surface of said workpiece so as to produce a pattern of a first color on said surface of said workpiece, said surface of said workpiece being made of a synthetic material containing organic and inorganic materials;
said optical system comprising at least one element for deflection, collection, magnification, division, attenuation, or mode change of said laser beam;
changing at least one of said at least one element for deflection, collection, magnification, division, attenuation, or mode change of said laser beam with another element for deflection, collection, magnification, division, attenuation, or mode change of said laser beam to thereby modify said optical system;
directing said thus generated laser beam through said mask and the thus modified optical system onto said surface of said workpiece, having said pattern of said first color thereon, to produce a pattern of a second color on said surface of said workpiece, said second color being different from said first color, thereby providing a marked pattern on said surface of said workpiece wherein said marked pattern has a plurality of colors.

5,703,710

METHOD FOR MANIPULATING OPTICAL ENERGY USING POLED STRUCTURE

Michael J. Brinkman, Redwood City; David A.G. Deacon, Los Altos, and William K. Bischel, Menlo Park, all of Calif., assignors to Deacon Research, Palo Alto, Calif.

Filed Sep. 9, 1994, Ser. No. 304,042

Int. Cl.^{6} G02F *1/09*

U.S. Cl. 359—283 **4 Claims**

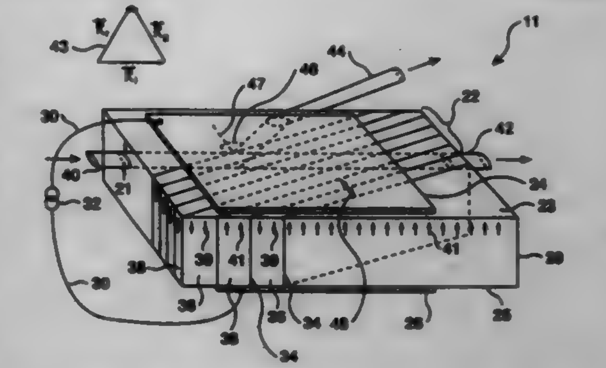

1. A method for frequency selective beam coupling comprising:
directing a first energy beam along a first propagation axis in a solid dielectric material, said solid dielectric material having a pattern of differing domains, at least a first type of said domains being a poled structure and forming at least two elements alternating with a second type of said domains;
directing a second energy beam along a second propagation axis in said solid dielectric material, said second propagation axis being transverse of said first propagation axis and said second energy beam intersecting with said first energy beam; and
applying an electric field through said solid dielectric material at a first electrode, said first electrode confronting said solid dielectric material and bridging at least two of said elements of said first type of poled structure to cause said at least two elements to interact with said first energy beam and said second energy beam.

5,703,711

IN-LINE OPTICAL AMPLIFIER

Satoshi Hamada, Tokyo, Japan, assignor to NEC Corporation, Tokyo, Japan

Filed Jun. 7, 1996, Ser. No. 659,934

Claims priority, application Japan, Jun. 9, 1995, 7-143034

Int. Cl.^{6} H01S *3/00*

U.S. Cl. 359—341 **36 Claims**

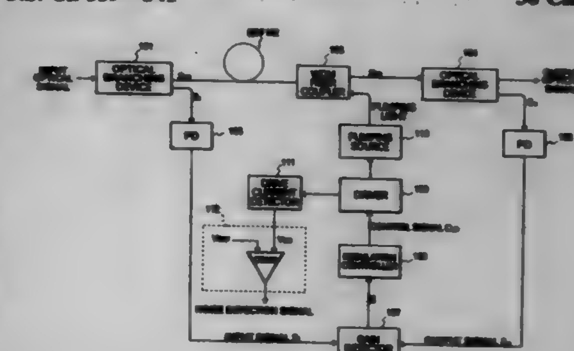

1. A circuit for optically amplifying an input optical signal to produce an output optical signal, comprising:
power detecting means for detecting an input power and an output power from the input optical signal and the output optical signal, respectively;
amplifying means for optically amplifying the input optical signal after the input power is detected with a gain varying in accordance with an intensity of pumping light;

gain detecting means for detecting a resultant gain of the circuit based on the input power and the output power;
gain control means for adjusting the intensity of the pumping light such that the resultant gain of the circuit is kept at a predetermined gain; and
detecting means for detecting a physical quantity associated with a deviation of the resultant gain of the circuit from the predetermined gain.

5,703,712
SILICA GLASS MEMBER FOR UV-LITHOGRAPHY, METHOD FOR SILICA GLASS PRODUCTION, AND METHOD FOR SILICA GLASS MEMBER PRODUCTION
Norio Komine, Sagamihara; Hiroki Jinbo, Kawasaki; Seishi Fujiwara, Sagamihara, and Hiroyuki Hiraiwa, Yokohama, all of Japan, assignors to Nikon Corporation, Tokyo, Japan
Division of Ser. No. 193,474, Feb. 8, 1994, abandoned. This application Jul. 31, 1995, Ser. No. 509,223
Claims priority, application Japan, Feb. 10, 1993, 5-22293; Feb. 10, 1993, 5-22294; Apr. 23, 1993, 5-98218; Dec. 27, 1993, 5-330740
Int. Cl.[6] G02B *6/00;* **C03C** *3/04;4/08;13/00*
U.S. Cl. 359—350 **3 Claims**

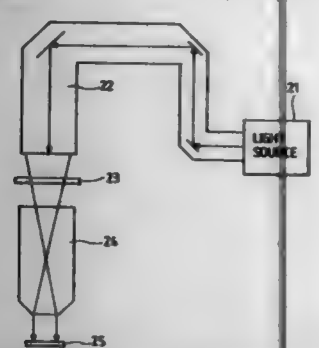

1. An optical element for use in UV-lithography in a specified wavelength region of 400 nm or shorter, comprising a silica glass member having a hydrogen molecule concentration which is equal to or higher than 5×10^{17} molecules/cm^3 and which is higher in a central area than in a peripheral area.

5,703,713
MULTI-WAVELENGTH VARIABLE ATTENUATOR AND HALF WAVE PLATE
Tony P. Leong, San Jose; Edward S. North, Los Altos, and Richard Linsley Herbst, Palo Alto, all of Calif., assignors to New Wave Research, Sunnyvale, Calif.
Division of Ser. No. 199,389, Feb. 18, 1994, Pat. No. 5,611,946. This application May 31, 1995, Ser. No. 455,509
Int. Cl.[6] G02B *5/30;27/28*
U.S. Cl. 359—352 **15 Claims**

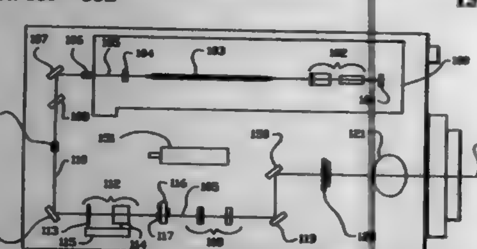

1. A multiple wavelength variable attenuator comprising:
a multiple wavelength wave plate which functions as a half-wave plate for at least three wavelengths selected from the group consisting of a fundamental wavelength of a laser, a second harmonic of the fundamental wavelength, a third harmonic of the fundamental wavelength and a fourth harmonic of the fundamental wavelength;
a polarizer; and
a mechanism to control relative angular position of the multiple wavelength wave plate and the polarizer to provide controllable attenuation of at least three wavelengths selected from the group consisting of the fundamental wavelength, the second harmonic of the fundamental wavelength, the third harmonic of the fundamental wavelength and the fourth harmonic of the fundamental wavelength.

5,703,714
MICROSCOPE SYSTEM FOR CONTROLLING OPTICAL ELEMENTS IN INTERLOCK WITH A VARIATION IN OBSERVATION CONDITIONS
Jitsunari Kojima, Akiruno, Japan, assignor to Olympus Optical Co., Ltd., Tokyo, Japan
Filed Jan. 26, 1996, Ser. No. 592,448
Claims priority, application Japan, Feb. 2, 1995, 7-015812
Int. Cl.[6] G02B *21/00;21/06*
U.S. Cl. 359—368 **24 Claims**

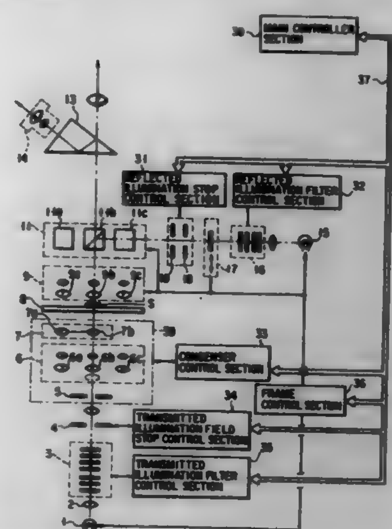

1. A microscope apparatus comprising:
a light source for generating illumination light;
an illumination optical system for illuminating an object to be observed with the illumination light;
an observation optical system for conducting an observation image of the illuminated object to an observation site;
an objective change unit, arranged in the observation optical system, for holding a plurality of objectives and for selectively inserting one of the objectives onto an optical path of the observation optical system;
an optical system controller for independently controlling an optical element arranged in the illumination optical system, and for independently controlling an optical element arranged in the observation optical system, said optical system controller including a frame controller for controlling the objective change unit to insert a given one of the plurality of objectives selected by an observer onto the optical path of the observation optical system;
a recognition unit for recognizing a given one of a plurality of predetermined observation methods which is designated by the observer;
a memory having a table for registering setting conditions of the optical elements which correspond to the respective observation methods, and fit/unfit information indicating whether or not each of the plurality of objectives is fit for the respective observation methods; and
a fit determination module operable in accordance with the fit/unfit information registered in the table of the memory for: (i) when the observer designates the observation method, determining whether or not the designated observation method is fit for the selected objective, and (ii) when the observer selects the objective, determining whether or not the selected objective is fit for the designated observation method.

5,703,715
DEVICE FOR STABILIZING THE FOCUS OF A MICROSCOPE
Norbert Gaul, Solms-Oberbiel, Germany, assignor to Leica Mikroskopie und Systeme GmbH, Wetzlar, Germany
Filed Aug. 16, 1996, Ser. No. 689,968
Claims priority, application Germany, Aug. 16, 1995, 195 30 136.6
Int. Cl.[6] G02B *21/26;21/00*
U.S. Cl. 359—392 **20 Claims**

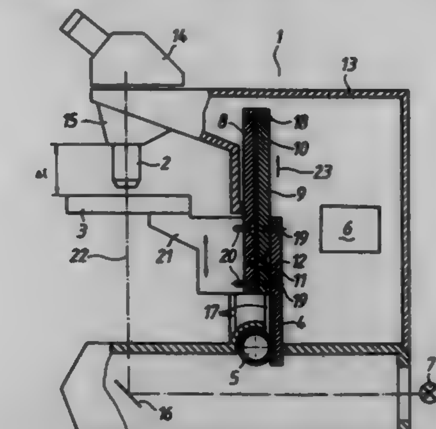

1. A device for stabilizing the focus in a microscope, the microscope having an objective and a specimen stage which, for the purpose of setting the focus, is constructed such that it can be adjusted in height along an objective axis by a drive gear and a toothed rack, and having a body of the microscope in which generate heat and cause a displacement, caused by heat, in distance of the specimen stage relative to the objective, and thus cause defocusing, said device comprising:
at least two rods of different thermal expansion for compensating for the defocusing caused by heat, said rods being interposed between the toothed rack and the specimen stage, the second rod being connected with one of its ends to the toothed rack and with its other end to one end of the first rod, and the first rod bearing the specimen stage with its other end, said first rod counteracting the thermal elongation of the second rod and thus the displacement of the specimen stage through the thermal elongation of the first rod due to heat, wherein the specimen stage is tracked in distance as a function of temperature as a consequence of the different thermal expansions of the two rods.

5,703,716
RE-IMAGING CONVERTER LENS APPARATUS AND METHOD
Akiko Furuta, Chiba, Japan, assignor to Nikon Corporation, Tokyo, Japan
Filed Aug. 24, 1995, Ser. No. 519,413
Claims priority, application Japan, Aug. 26, 1994, 6-00774; Aug. 26, 1994, 6-00775
Int. Cl.[6] G02B *23/00;9/34*
U.S. Cl. 359—431 **32 Claims**

1. A re-imaging optical system for use with a prime lens having a field angle and capable of forming a primary image on a primary image plane, the re-imaging optical system comprising:
(a) a field lens group adapted to be disposed coaxially imagewise relative to the primary image plane; and
(b) an optical relay disposed coaxially imagewise relative to the field lens group, the optical relay being operable to transfer and positively demagnify substantially the entire primary image from the primary image plane to a secondary image plane situated imagewise relative to the optical relay, without reducing the field angle of the prime lens, the optical relay comprising (i) a first lens group disposed coaxially imagewise of the field lens group, the first lens group having a negative refracting power and a focal length f_2; (ii) a second lens group disposed coaxially imagewise of the first lens group, the second lens group having a positive refracting power and a focal length f_3; and (iii) an erecting lens group interposed coaxially between the first and second lens groups; the optical relay having a focal length f_r, wherein
$3<|f_2/f_r|<4$.

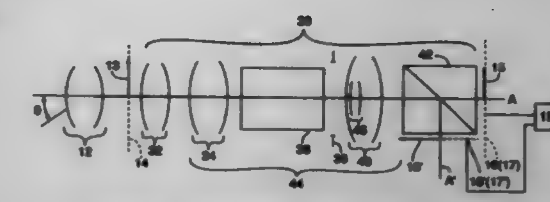

5,703,717
THREE-DIMENSIONAL PROJECTION DISPLAY APPARATUS
David Ezra; Graham John Woodgate; Jonathan Harrold, and Basil Arthur Omar, all of Oxfordshire, United Kingdom, assignors to Sharp Kabushiki Kaisha, Osaka, Japan
Filed Nov. 10, 1994, Ser. No. 337,932
Claims priority, application United Kingdom, Nov. 12, 1993, 9323402
Int. Cl.[6] G02B *27/22;* **H04N** *13/00*
U.S. Cl. 359—462 **21 Claims**

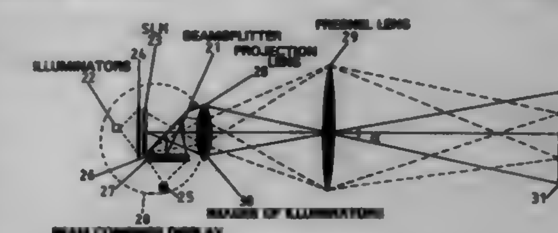

1. A three-dimensional projection display apparatus, comprising autostereoscopic image producing means for directing light beams corresponding to respective views in different directions, further comprising at least one projection lens co-operating with the autostereoscopic image producing means to image the light beams at respective different regions in the aperture of the projection lens, and a light-transmissive or light-reflective screen co-operating with the autostereoscopic image producing means and the projection lens to image the views at the screen.

5,703,718
OBJECT REFLECTOR DETECTING APPARATUS
Fumio Ohtomo; Kunihiro Hayashi; Jun-ichi Kodaira; Hiroyuki Nishizawa, and Kenichiro Yoshino, all of Tokyo, Japan, assignors to Kabushiki Kaisha Topcon, Tokyo, Japan
Filed Jun. 24, 1994, Ser. No. 265,145
Claims priority, application Japan, Jun. 25, 1993, 5-155608
Int. Cl.[6] G02B *5/30;* **G02F** *1/01;* **G01C** *15/00;* **G01J** *4/00*
U.S. Cl. 359—494 **9 Claims**

1. Apparatus for detecting polarized light comprising:
a polarized light source for emitting polarized light;
circular polarizing means for circularly polarizing the polarized light emitted from said polarized light source;
rotary means for irradiating said circularly polarized light on a reference plane;

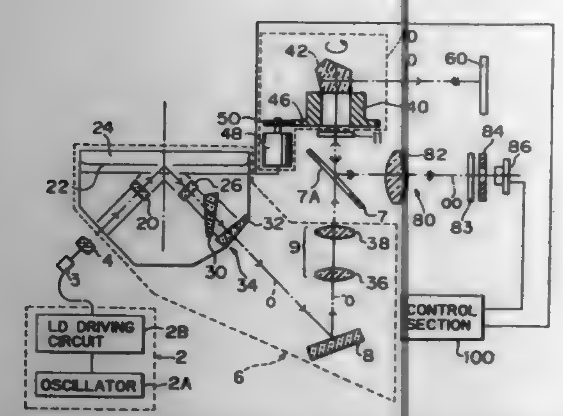

an objective reflector positioned to reflect light emitted by said polarized light source, said object reflector comprising at least one retro-reflective member and a quarter-wave birefringent member disposed in front of said at least one retro-reflective member, and said at least one retro-reflective member and said birefringent member being configured so that light impinging on said object reflector and light reflected from said object reflector have different directions of polarization;

detector means for detecting only the polarized light reflected from said object reflector; and

control means for moving the emitted polarized light in a reference plane on said object reflector.

5,703,719

REFLECTOR ROAD SIGN WITH SELF-PROVIDED LIGHT MEANS

Judy Chen, P.O. Box 372, Hsin-Chu, Taiwan

Filed Jan. 17, 1997, Ser. No. 784,496

Int. Cl.⁶ G02B *5/136;5/12*

U.S. Cl. 359—547 **12 Claims**

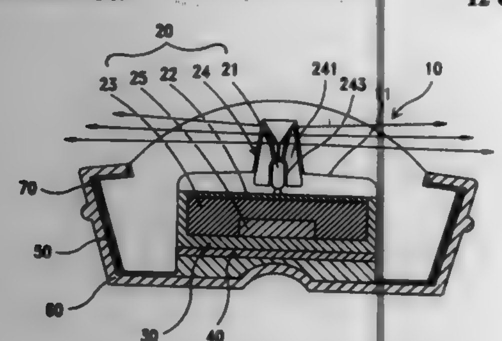

1. A reflector road sign comprising a reflector body made of a tempered glass; a casing made to receive said reflector body, wherein said reflector body has a bottom chamber; a solar lighting system is installed in the bottom chamber of said reflector body, said solar lighting system comprising a LED (light emitting diode) lamp, a solar cell assembly, a rechargeable battery connected to said solar cell assembly, a control circuit connected to said rechargeable battery and said LED lamp and controlling said LED lamp to operate when an intensity of ambient light drops below a predetermined level, and a reflecting device mounted around said LED lamp to reflect light.

5,703,720

LIGHT COLLECTION AND DISTRIBUTION APPARATUS

Frank J. Fulco, 4814 Woodland, Western Springs, Ill. 60558, and Frank J. Fulco, Jr., 1486 Monarch Cir., Naperville, Ill. 60564

Filed Aug. 19, 1996, Ser. No. 699,256

Int. Cl.⁶ B02B *5/08*

U.S. Cl. 359—591 **37 Claims**

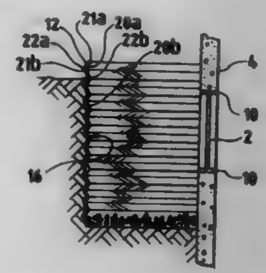

1. A light collection and distribution apparatus for use with an exterior window well disposed in operative association with a building wall that has an opening with a window extending below grade supported by a frame comprising:

a. a window well liner having at least one primary surface that is reflective,
   said at least one primary surface facing generally toward the window to reflect light rays in the direction of said window,
   said liner being at least partially disposed in the window well and having a bottom edge that extends below grade,
   said at least one primary surface being skewed from a vertical plane;

b. a reflective panel being mounted on the building wall above the window to reflect light rays away from the building wall,
   at least a portion of said first reflective panel being skewed relative to said building wall;

c. at least one pad arranged proximate to the bottom edge of the liner having at least one generally upwardly facing reflective surface;

d. a reflective framework mounted on the building wall around at least a portion of the window to reflect light rays away from the building wall; and

e. means for increasing light passage through the building wall comprising at least one of:

(1) a transom disposed in the building wall above the window,
   said transom being supported by a crossbar secured to the building wall which separates the transom from the window;

(2) at least one of a first reflective surface disposed on a bottom exterior sill of the window and a second reflective surface disposed on a bottom interior sill of the window,
   said at least one of a first reflective surface and a second reflective surface being arranged to reflect light rays through the window; and

(3) a plurality of reflectors disposed on at least a side portion of the frame,
   said reflectors being arranged to reflect light rays through the window.

5,703,721

OPTICAL MAGNIFIER

Joseph R. Bietry; Lee R. Estelle, both of Rochester, and Paul D. Ludington, Brockport, all of N.Y., assignors to Eastman Kodak Company, Rochester, N.Y.

Filed Nov. 27, 1995, Ser. No. 562,666

Int. Cl.⁶ G02B *25/00;13/18;27/42*

U.S. Cl. 359—646 **15 Claims**

1. An optical magnifier consisting of, from a front, eye side to a rear, object side, a first biconvex element and a second element, the second element consisting of two refractive surfaces, both of which are concave toward the object side and the magnifier having a

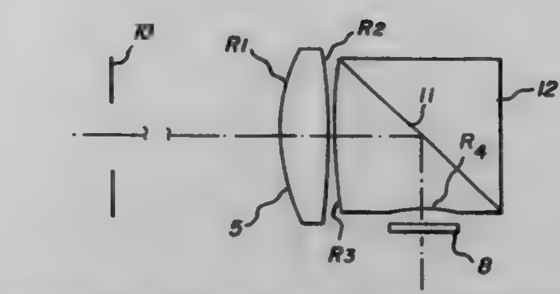

diffractive surface on either the rear surface of the first biconvex element or the front surface of the second element.

5,703,722

SEGMENTED AXIAL GRADINET ARRAY LENS

Richard Blankenbecler, 974 Cottrell Way, Stanford, Calif. 94305

Continuation-in-part of Ser. No. 395,387, Feb. 27, 1995, Pat. No. 5,541,774. This application Jul. 22, 1996, Ser. No. 681,225

Int. Cl.⁶ G02B *3/00;13/08;3/08;9/00*

U.S. Cl. 359—653 **21 Claims**

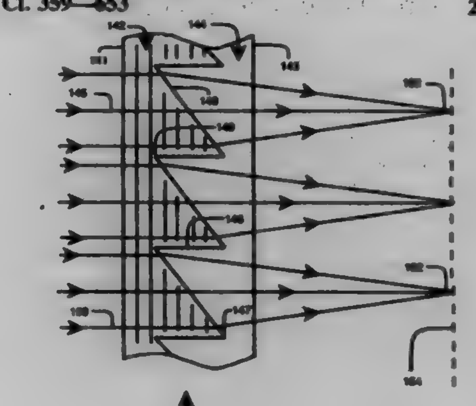

1. A segmented array lens having a front surface, a rear surface and a plurality of parallel optical axes, said lens comprising:

a first planar sheet having first and second sides, said second side of said first sheet having a series of parallel grooves, each of said grooves including a pair of planar walls, adjacent ones of said grooves intersecting at one or more ridges parallel to said grooves;

a second planar sheet having first and second sides, said first side of said second sheet including a series of parallel grooves, each of said grooves including a pair of planar walls, adjacent ones of said grooves intersecting at one or more ridges parallel to said grooves;

said ridges of said second side of said first sheet mating with said grooves of said first side of said second sheet and said ridges of said first side of said second sheet mating with said grooves of said second side of said first sheet to form a continuous interface from said first sheet to said second sheet;

at least one wall of said grooves forming a finite, non-normal angle with one of said optical axes; and

at least one of said sheets has an axial gradient index of refraction profile.

5,703,723

OPTICAL SYSTEM COMPRISING GRADED REFRACTIVE INDEX LENS ELEMENT

Norihiko Aoki, Tokyo, Japan, assignor to Olympus Optical Co., Ltd., Tokyo, Japan

Division of Ser. No. 212,782, Mar. 15, 1994, Pat. No. 5,546,229, which is a division of Ser. No. 882,254, May 2, 1992, Pat. No. 5,313,328, which is a continuation of Ser. No. 514,546, Apr. 26, 1990, abandoned. This application Apr. 23, 1996, Ser. No. 636,781

Claims priority, application Japan, Apr. 27, 1989, 1-105940

Int. Cl.⁶ G02B *3/00*

U.S. Cl. 359—654 **2 Claims**

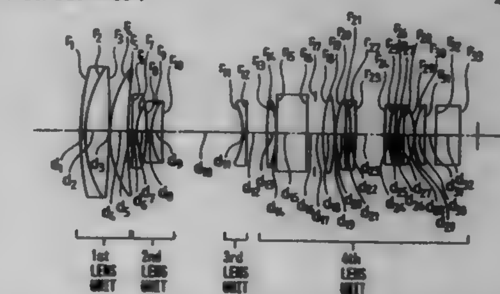

1. An optical system comprising a plural number of lens elements wherein at least one of said lens elements is designed as a graded refractive index lens element having refractive index distribution profile expressed by the following formula (1) in the direction perpendicular to the optical axis and satisfying the following condition (2):

$$n(r)=n_0+\Sigma n_i r_i^{2i} \quad (1)$$

$$0<\nu_1 d \quad (2)$$

wherein the reference symbol n_0 represents refractive index of said graded refractive index lens element as measured on the optical axis, the reference symbol r designates distance as measured from the optical axis in the radial direction, the reference symbol n(r) denotes refractive index of said graded refractive index lens element as measured at the distance r from the optical axis, the reference symbol n_i represents the refractive index distribution coefficient of the 2i'th order, and the reference symbol ν_{1d} designates a value determined by the following formula when the values of the coefficient of the second order for the d-line, F-line and C-line are represented by n_{1d}, n_{1F} and n_{1C} respectively:

$$\nu_1 d=\frac{n_1 d}{n_1 F-n_1 C}$$

wherein said optical system comprises a lens unit having a negative refractive power, said graded refractive index lens element is arranged in said lens unit having the negative refractive power, and said graded refractive index lens element has a positive refractive power of surface, a positive refractive power of medium and a positive refractive power as a whole.

5,703,724

OBJECTIVE LENS SYSTEM FOR ENDOSCOPE

Hitoshi Miyano, Saitama, Japan, assignor to Fuji Photo Film, Co., Ltd., Kanagawa, and Fuji Photo Optical Co., Ltd, Saitama-ken, both of Japan

Filed May 16, 1996, Ser. No. 653,599

Claims priority, application Japan, May 16, 1995, 7-117204

Int. Cl.⁶ G02B *21/02;3/00;9/00;9/34*

U.S. Cl. 359—660 **17 Claims**

1. An objective lens system for an endoscope comprising from the subject end to the image end a meniscus lens element of negative optical power having a concave image side surface, a plano-convex lens element of positive optical power having a

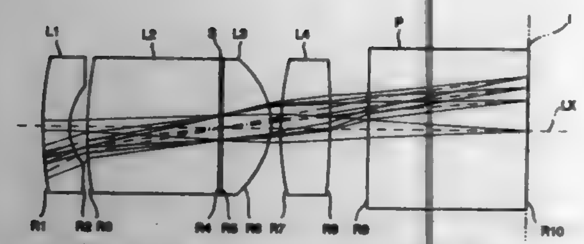

convex subject side surface, an aperture element, a plano-convex lens element of positive optical power having a convex image side surface and a biconvex lens element of positive optical power, said objective lens systems satisfying the following relations:

$Bf > 1.5f$
$1.80 < D/R2 < 2.40$
$\mu_2 > 45.0$
$\mu_3 > 50.0$
$\mu_4 > 50.0$

where Bf designates the back focal length of the objective lens system, f designates the overall focal length of the objective lens system, D designates the value of $d_{23} + (d_{34}/n_2) + d_{45}$, where d_{23}, d_{34} and d_{45} are the axial distance between the second and third lens surfaces, the third and fourth lens surfaces and the fourth lens surface and the image side surface of the aperture element, respectively, and n_2 is the index of refraction of the second lens element, R2 is the radius of curvature of the second lens surface, and μ_2, μ_3 and μ_4 are the dispersion of the second, third and fourth lens elements as measured by the Abbe number, respectively.

5,703,725
COMPACT HIGH-PERFORMANCE ZOOM LENS
Masayuki Aoki, Oyama, Japan, assignor to Nikon Corporation, Tokyo, Japan
Filed Nov. 2, 1995, Ser. No. 552,195
Claims priority, application Japan, Nov. 14, 1994, 6-304275
Int. Cl.[6] G02B *15/14*
U.S. Cl. 359—683 **18 Claims**

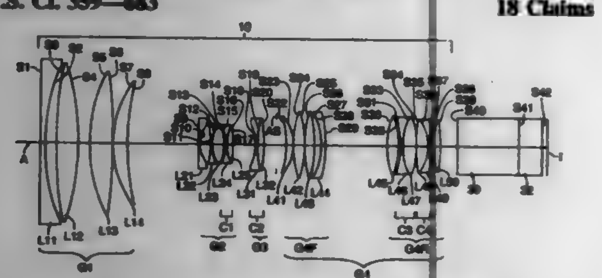

1. A zoom lens comprising, objectwise to imagewise:
first, second, third, and fourth lens groups having positive, negative, negative, and positive refractive power, respectively, disposed on an optical axis;
the first lens group having a focal length f_1 and including, sequentially objectwise to imagewise, a negative lens element and first, second, and third positive lens elements;
each of the first, second, and third positive lens elements in the first lens group having an Abbe number, wherein V_{d1} is the minimum Abbe number of all said positive lens elements, V_{d12} is the Abbe number of the first positive lens element, and V_{d13} is the Abbe number of the second positive lens element, the zoom lens satisfying the conditions:

$V_{d1} \geqq 65.0$

$V_{d12} \geqq 94.0$

$V_{d13} > 81.0;$

the second lens group comprising at least four lens elements;
the zoom lens being operable to zoom over a zoom ratio V from a wide-angle end to a telephoto end, at which wide-angle end the second lens group has a lateral magnification β_{2W} and at which telephoto end the zoom lens has a focal length f_T and an F-number F_T, wherein, during zooming from the wide-angle end to the telephoto end, the second lens group moves linearly objectwise to imagewise on the optical axis, the third lens group moves on the optical axis, and the first and fourth lens groups remain stationary on the optical axis; and
the zoom lens satisfying the conditions:

$0.6 < F_T^{1/2}(f_1/f_T) < 1.0$

$0.7 < |\beta_{2W} \cdot V^{1/2}| < 1.1.$

5,703,726
REVERSE TELEPHOTO LENS
John D. Griffith, Rochester, N.Y., assignor to Eastman Kodak Company, Rochester, N.Y.
Filed Apr. 12, 1996, Ser. No. 631,500
Int. Cl.[6] G02B *13/04;13/18*
U.S. Cl. 359—753 **21 Claims**

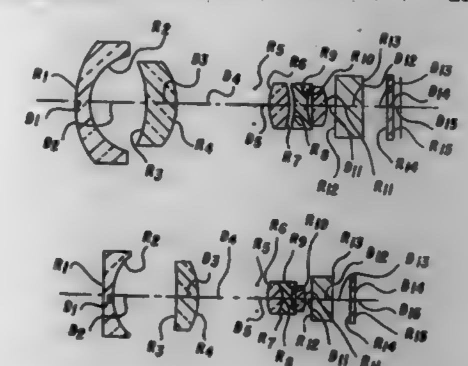

1. A reverse telephoto lens comprising, in order from a front, object side of the lens to a rear, image side of the lens:
a front negative group of lens components including a front negative component and a rear positive component, separated by a first airspace A1;
a rear positive group of lens elements separated from the front negative group by a second airspace A2; said rear positive group of lens elements including at least two positive lens elements and a negative lens element located therebetween and
a stop located in the second airspace,
wherein the distance between the front negative component and the rear positive group is at least 2.5 times the focal length of the lens, and wherein $A1 \leqq A2$.

5,703,727
ZOOM LENS AND MAGNIFIER UTILIZING THE SAME
John A. Lawson, Pebble Beach; W. Andrew Morrison, Saratoga, and Rob E. Savoie, Los Altos Hills, all of Calif., assignors to Telesensory Corporation, Mountain View, Calif.
Filed Jul. 22, 1994, Ser. No. 279,059
Int. Cl.[6] G02B *27/02;15/14*
U.S. Cl. 359—802 **7 Claims**

1. A magnifier for enhancing the visual projection of an object comprising, in combination:
(A) a support for an object to be magnified;
(B) a focusing lens group positioned on an optic axis to gather light from an object at said support;
(C) a focus control manipulatable by an operator of said magnifier and connected to said focusing lens group for moving the latter on said optic axis to focus an image of said object at an image plane;
(D) a pair of zoom lens groups positioned on said optic axis between said focusing lens group and said image plane;

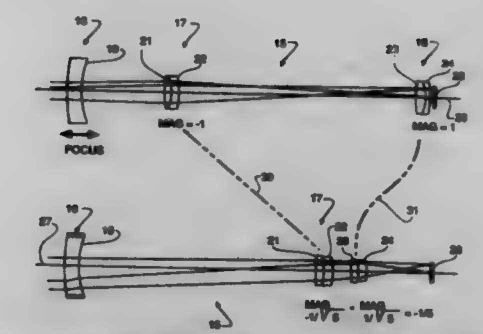

(E) motion linkage connected to said zoom lens groups for moving the latter along said axis relative to one another between said focusing lens group and said image plane to change the magnification of said image of said object at said image plane;
(F) a zoom control manipulatable by an operator of said magnifier, connected to said motion linkage to enable manipulation of said zoom lens groups by said operator to obtain a desired magnification;
(G) an image pickup device positioned at said image plane to receive said image of said object;
(H) an electrically operable monitor in communication with said pickup device adapted to display an enlarged view of said image of said object;
(I) said motion linkage being connected to said zoom lens groups to move the same along said axis in a range between said focusing lens group and said image plane so as not to require movement of said focusing lens group to focus said image at said image plane after operation of said motion linkage: and
(J) the magnification of each of said zoom lens groups being generally of the same positive power as that of the other, and said focusing lens group consisting of one negative focusing lens and each of said positive power zoom lens groups consisting of two lenses.

5,703,728
SUPPORT POST ARCHITECTURE FOR MICROMECHANICAL DEVICES
Gregory C. Smith, Carrollton, and Robert M. Boysel, Plano, both of Tex., assignors to Texas Instruments Incorporated, Dallas, Tex.
Filed Nov. 2, 1994, Ser. No. 333,195
Int. Cl.[6] G02B *7/182;5/08;26/08;26/00*
U.S. Cl. 359—871 **28 Claims**

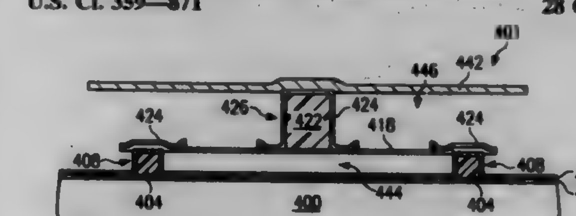

1. A micromirror device comprising:
a substrate;
at least one hinge support pillar supported by said substrate, said hinge support pillar comprised of a first pillar material inside a first metal sheath;
at least one hinge connected to said hinge support pillar;
at least one mirror support pillar connected to said hinge, said mirror support pillar comprised of a second pillar material inside a second metal sheath; and
at least one mirror element supported by said mirror support pillar.

5,703,729
IMAGE INPUTTING APPARATUS
Morihiro Takeda, and Masanao Nakahara, both of Shiga, Japan, assignors to Dainippon Screen Mfg. Co., Ltd., Kyoto, Japan
Filed Nov. 15, 1995, Ser. No. 559,699
Claims priority, application Japan, Dec. 12, 1994, 6-307716; Dec. 13, 1994, 6-309006
Int. Cl.[6] G02B *7/02;* **H04H** *1/393*
U.S. Cl. 359—821 **12 Claims**

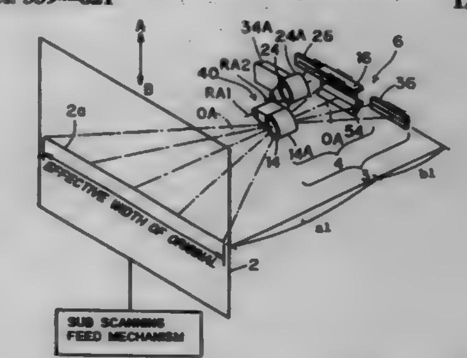

1. An image inputting apparatus for reading an image of an original, comprising:
an image reading part; and
moving means for moving an original and said image reading part relative to each other,
wherein said image reading part comprises:
a plurality of solid linear image sensors; and
an optical system for focusing a binary image of an original at a first magnification, dividing said image into a plurality of divided images and projecting each divided image onto an associated one of said solid linear image sensors during reading of said binary image, said optical system focusing a continuous tone image of an original at a second magnification which is lower than said first magnification and projecting said image onto one of said solid linear image sensors during reading of said continuous tone image.

5,703,730
LENS DRIVE APPARATUS
Kenju Yomoda, Urawasi, Japan, assignor to Samsung Electronics Co., Ltd., Kyungki-do, Rep. of Korea
Filed May 1, 1995, Ser. No. 431,737
Claims priority, application Rep. of Korea, Apr. 30, 1994, 94-9537
Int. Cl.[6] G02B *7/02*
U.S. Cl. 359—824 **14 Claims**

1. A lens drive apparatus for driving a lens component vertically and horizontally, said lens drive apparatus comprising:
a housing;
at least one magnet member for generating a magnetic flux;
a coil member installed fixedly on said housing and for generating an electromagnetic force by interlinking with the magnetic flux of said magnet member;
a lens support member, said lens component and one of said at least one magnet member being disposed on said lens support member;
a mass balancing member for balancing said lens support member; and
seesaw support means for coupling said lens support member and said mass balancing member to said housing, so that said

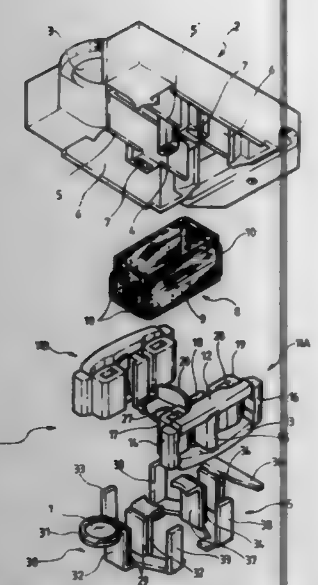

lens support member and the mass balancing member can move in an opposing seesaw manner.

5,703,731

EXTERIOR MIRROR WITH INDEXING AND CONTROL PIVOTING

Ian Boddy, Ada; Matthew D. Potts, Kentwood, and Keith D. Foote, Wayland, all of Mich., assignors to Lowell Engineering Corporation, Alto, Mich.

Continuation-in-part of Ser. No. 373,742, Jan. 17, 1995. This application Mar. 7, 1996, Ser. No. 612,068

Int. Cl.⁶ G02B *5/08;7/182;* **B60R** *1/06*

U.S. Cl. 359—841 **16 Claims**

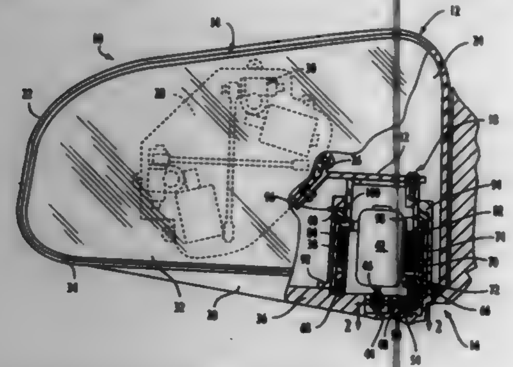

1. A vehicle mirror assembly comprising

a housing assembly,

a mirror unit mounted on said housing assembly,

a support assembly constructed and arranged to be fixedly mounted on a vehicle and to support said housing assembly thereon in an operative position extending laterally outwardly from the vehicle so that said mirror unit serves as an exterior rear view mirror for the driver of the vehicle,

a power operated pivot assembly within said housing assembly constructed and arranged to enable said housing assembly to be pivoted with respect to said support assembly about a generally upright axis (1) between the operative position thereof and a folded position with respect to the vehicle in response to the power operation of said pivot assembly and (2) from the operative position thereof in either direction in response to an unwanted impact blow applied in either direction thereto,

said power operated pivot assembly including an electric motor and a speed reduction motion transmitting assembly between an output shaft of said electric motor and said housing assembly and an outer fixed tubular member fixed to said support assembly,

said speed reduction motion transmitting assembly including a motion transmitting member connected to move in response to a desired rotational movement of said output shaft and a movable tubular member positioned concentric with said axis connected to move with said housing assembly,

a spring biased pivotal control system mounted within said outer fixed tubular member between said movable tubular member and said outer fixed tubular member and constructed and arranged to provide a control resistance to pivotal movement of said movable tubular member about said axis and hence the housing assembly connected thereto which control resistance (1) does not exceed a predetermined value when said housing assembly is moved in either direction between said operative and folded positions and (2) exceeds said predetermined value when said housing assembly is moved into said operative position in a direction away from said folded position and away from said operative position in response to an unwanted impact blow applied to said housing assembly in a direction away from said folded position and

a spring biased indexing system between said motion transmitting member and said movable tubular member constructed and arranged to (1) transmit the movement of said motion transmitting member in response to a desired rotation of said output shaft to said movable tubular member to thereby move said housing assembly between said operative and folded positions with said control system providing a control resistance to such movement which does not exceed said predetermined value in response to the desired rotation of said motor shaft and (2) allow said movable tubular member to be moved with said housing assembly from the operative position thereof relative to said motion transmitting member in response to an unwanted impact blow applied to said housing assembly (1) in a direction to move said housing assembly from said operative position toward said folded position with said indexing system providing an indexing resistance to such movement which is independent of the control resistance provided by said control system and (2) in a direction to move said housing assembly beyond the operative position thereof away from said folded position with said indexing system providing an indexing resistance which is independent of the control resistance provided by said control system.

5,703,732

EXTERIOR MIRROR WITH INDEXING AND CONTROL PIVOTING

Ian Boddy, Grand Rapids; Matthew D. Potts; Keith D. Foote, both of Kentwood, and James Ruse, Allegan, all of Mich., assignors to Lowell Engineering Corporation, Alto, Mich.

Continuation-in-part of Ser. No. 612,068, Mar. 7, 1996, and Ser. No. 373,742, Jan. 17, 1995. This application Oct. 11, 1996, Ser. No. 729,405

Int. Cl.⁶ G02B *5/08;7/182;* **B60R** *1/06*

U.S. Cl. 359—841 **21 Claims**

1. A vehicle mirror assembly comprising

a housing assembly,

a mirror unit mounted on said housing assembly,

a support assembly constructed and arranged to be fixedly mounted on a vehicle and to support said housing assembly thereon in an operative position extending laterally outwardly from the vehicle so that said mirror unit serves as an exterior rear view mirror for the driver of the vehicle,

a power operated pivot assembly between said support assembly and said housing assembly constructed and arranged to enable said housing assembly to be pivoted with respect to said support assembly about a generally upright axis (1) between the operative position thereof and a folded position with respect to the vehicle in response to the power operation of said pivot assembly and (2) from the operative position thereof in either direction in response to an unwanted impact blow applied in either direction thereto,

said power operated pivot assembly including an electric motor and a non-self-reversing speed reduction motion transmitting assembly between an output shaft of said electric motor and said housing assembly,

a spring biased pivotal control system between said housing assembly and said support assembly constructed and arranged to provide a control resistance to pivotal movement of said housing assembly about said axis which control resistance (1) does not exceed a predetermined value when said housing assembly is moved in either direction between said operative and folded positions and (2) exceeds said predetermined value when said housing assembly is moved into said operative position in a direction away from said folded position and away from said operative position in response to an unwanted impact blow applied to said housing assembly in a direction away from said folded position and

a spring biased indexing system operatively associated with said motion transmitting assembly constructed and arranged to (1) transmit the movement of said motion transmitting assembly in response to a desired rotation of the motor shaft to said housing assembly to thereby move said housing assembly between said operative and folded positions with said spring biased pivotal control system providing a control resistance to such movement which does not exceed said predetermined value in response to the desired rotation of said motor shaft and (2) allow said housing assembly to be moved from the operative position thereof relative to said electric motor in response to an unwanted impact blow applied to said housing assembly (1) in a direction to move said housing assembly from said operative position toward said folded position with said indexing system providing an indexing resistance to such movement which is independent of the control resistance provided by said control system and (2) in a direction to move said housing assembly beyond the operative position thereof away from said folded position with said indexing system providing an indexing resistance which is independent of the control resistance provided by said control system,

said spring biased pivotal control system including a movable control structure connected through said motion transmitting assembly and said spring biased indexing system to move with said housing assembly and a fixed control structure mounted in fixed relation with respect to said support assembly,

said control structures providing control surfaces which interengage during a final incremental movement of said housing assembly by said electric motor into said operative position in a direction away from said folded position to thereby stress the spring biased pivotal control system and establish a control bias on said housing assembly to undertake a similar incremental movement in the opposite direction, the extent of said incremental movement being greater than the incremental movement permitted by said motion transmitting assembly through backlash, said spring biased pivotal control system being constructed and arranged to enable the control bias provided thereby to stabilize said housing assembly when in said operative position (1) after having been moved therein by said electric motor in a direction away from said folded position and (2) when manually returned to said operative position after an unwanted impact blow movement therefrom.

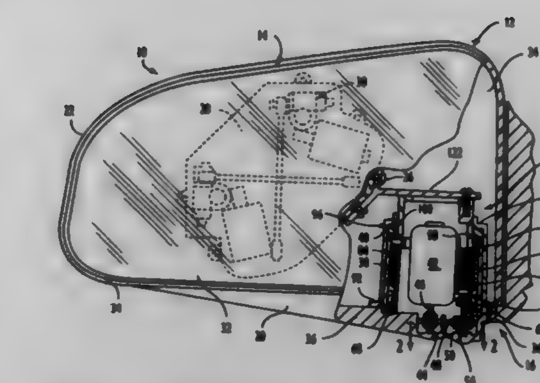

5,703,733

MAGETIC RECORDING/REPRODUCING METHOD, MAGNETIC REPRODUCING APPARATUS USED THEREFOR, MAGNETIC RECORDING MEDIUM AND METHOD FOR PRODUCING THE SAME

Shigehisa Suzuki; Tatsuya Fukami; Yoshio Fujii; Yuji Kawano, and Yoshinobu Maeda, all of Amagasaki, Japan, assignors to Mitsubishi Denki Kabushiki Kaisha, Tokyo, Japan

Filed Jul. 25, 1995, Ser. No. 506,871

Claims priority, application Japan, Mar. 6, 1995, 7-045523

Int. Cl.⁶ G11B *5/58;5/596*

U.S. Cl. 360—77.01 **7 Claims**

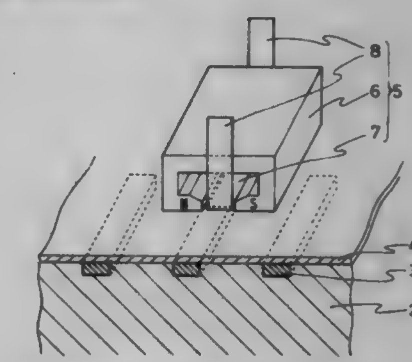

1. A method for magnetically recording/reproducing information, said method comprising the steps of:

recording an information signal by forming a pattern of a soft magnetic material in a magnetic recording medium proximate a first surface of a magnetic recording medium;

providing a magnetoelectric converting element at a position adjacent to and spaced away from said first surface;

applying a magnetic field to said magnetoelectric converting element; and

reproducing said information by detecting a variation of said magnetic field caused by a presence or absence of said soft magnetic material based on said pattern of said soft magnetic material while causing relative movement between said magnetoelectric converting element and said magnetic recording medium.

5,703,734

DISC DRIVE HAVING AN INTEGRAL GASKET AND CONTINUOUS OUTER PERIMETER SHOCK BUMPER

James William Berberich, San Jose, Calif.; Lowell James Berg; Zine-Eddine Boutaghou, both of Rochester, Minn.; John S. Heath, Winchester, England, and Jerry Lee Neubauer, Stewartville, Minn., assignors to International Business Machines Corporation, Armonk, N.Y.

Continuation of Ser. No. 321,935, Oct. 12, 1994, abandoned. This application Nov. 13, 1996, Ser. No. 749,480

Int. Cl.⁶ G11B *33/08;33/14;25/04*

U.S. Cl. 360—97.02 **5 Claims**

1. A disk drive comprising:

a base;

at least one disk rotatably attached to said base;

an actuator rotatably attached to said base, said actuator further including a transducer located proximate one end of said actuator, said actuator positioning said transducer over said at least one disk in a transducing relationship with said at least one disk;

a cover attached to said base to form an enclosure for said at least one disk and said transducer, said enclosure having four sides, each of said four sides having a given height;

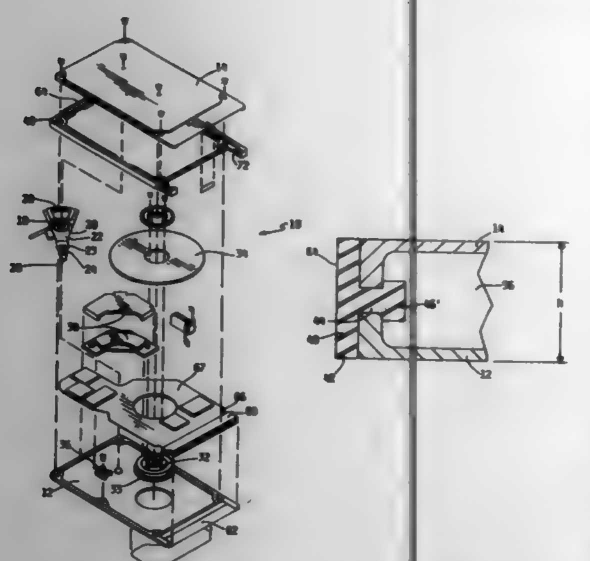

a connector associated with one of said four sides; and

a unitary gasket and outer perimeter shock bumper which extends between said base and said cover to form a continuous gasket at the joint between said base and said cover and which forms a continuous shock bumper around said enclosure, said shock bumper having a height equal to the height of at least three of said four sides of said enclosure such that an impact on a corner of said enclosure is absorbed by said unitary gasket and outer perimeter shock bumper, said corner being defined by two of said four sides and one of a top side and a bottom side of said enclosure.

5,703,735

MAGNETIC SINGLE POINT CONTACT LATCH ASSEMBLY

William F. Bleeke, Fort Wayne, Ind., assignor to Xolox Corporation, Fort Wayne, Ind.

Continuation of Ser. No. 295,237, Aug. 24, 1994, Pat. No. 5,541,790, which is a continuation of Ser. No. 58,479, May 6, 1993, Pat. No. 5,343,346. This application Jun. 17, 1996, Ser. No. 664,714

Int. Cl.⁶ G11B *5/54;* **A44B** *1/04;* **E05C** *17/56;* **H01F** *7/20*

U.S. Cl. 360—105 **24 Claims**

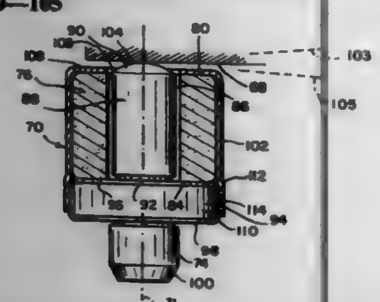

1. A magnetic means for magnetically engaging a ferromagnetic strike plate of an actuator at a single point of magnetic contact to position a head assembly of a disk drive over a data storage device when power is off to said data storage device, said magnetic means comprising a ferromagnetic core with a contact end and an opposite end spaced along an axis thereof, and a permanent magnet with first and second poles spaced along an axis thereof, said axes being coincident with the majority of flux from the magnet being channeled through the ferromagnetic core to establish the single point of magnetic contact between the ferromagnetic core and the strike plate.

5,703,736

Patent Not Issued For This Number

5,703,737

MAGNETIC RECORDING REPRODUCTION APPARATUS WITH IMPROVED ADJUSTMENT CHARACTERISTICS FOR AUDIO-CONTROL HEAD

Noboru Katohno, Mito; Yoshihisa Tsurumi, Hitachinaka, and Chikara Iwama, Hitachiota, all of Japan, assignors to Hitachi, Ltd., Japan

Filed Nov. 15, 1995, Ser. No. 558,181

Claims priority, application Japan, Nov. 18, 1994, 6-284616

Int. Cl.⁶ G11B *5/56;21/14*

U.S. Cl. 360—109 **2 Claims**

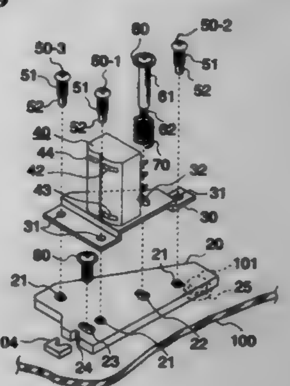

1. A magnetic recording and reproduction apparatus which effects recording/reproduction of a magnetic tape by a magnetic head provided on a rotary cylinder and effects recording/reproduction of audio signals and control signals by an audio-control head mounted on a head plate at a position different from a position of said rotary cylinder, comprising a synthetic resin part provided on a member having a through hole and on which said rotary cylinder is mounted, said synthetic resin part being molded of a resin integrally with a shaft part formed in the through hole in said member and a fixed part on a bottom surface of said member which is a remote side from the head plate, and

an adjustment screw for height adjustment of the audio-control head, an adjustment screw for inclination angle adjustment of the audio-control head and an adjustment screw for azimuth angle adjustment of the audio-control head,

wherein each of the adjustment screws has a cylindrical part on a tip thereof and are driven in respective tapped holes formed in the head plate on which said audio-control head is mounted, said cylindrical parts of the adjustment screws being inserted in respective holes bored through said synthetic resin part, so as to abut the surface of said member such that said head plate is fixed to said synthetic resin part to move said head plate and said synthetic resin part together parallel to said member, and the adjustment of the position of the audio-control head with respect to a moving direction of the magnetic tape is effectable by rotating said synthetic resin part around said through hole.

5,703,738

MAGNETIC HEAD MAGNETO-RESISTIVE ELEMENT WITH C-SHAPED MULTI-LAYERED STRUCTURE

In-eung Kim, Seoul, and Alexandre M. Choukh, Suwon, both of Rep. of Korea, assignors to Samsung Electro-Mechanics Co., Ltd., Suwon, Rep. of Korea

Filed Jun. 7, 1995, Ser. No. 472,975

Claims priority, application Rep. of Korea, Jan. 27, 1995, 95-1560

Int. Cl.⁶ G11B *5/39*

U.S. Cl. 360—113 **9 Claims**

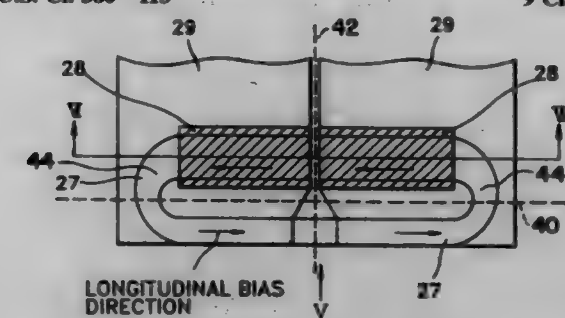

5. A magneto-resistive element for a thin-film magnetic head, said magneto-resistive element comprising:

a multi-layer structure defining an ellipse-like C-shape and comprising a soft magnetic film, a thin non-magnetic spacer layer over said soft magnetic film, and a magneto-resistive layer over said thin non-magnetic spacer layer, each of said soft magnetic film, said thin non-magnetic spacer layer, and said magneto-resistive layer being substantially planar and lying in a plane substantially parallel to a main plane

said multi-layer structure comprising:

an elongated active front portion having first and second ends and extending parallel to a first axis lying in said main plane,

first and second side portions separated by a gap and respectively contiguous with said first and second ends of said active front portion and each extending in a direction parallel to a second axis perpendicular to said first axis, and

first and second passive back portions respectively contiguous with said first and second side portions and each extending parallel to said first axis,

all of said front portion being located in front of said first axis and all of said first and second back portions being located behind said first axis;

an antiferromagnetic layer covering a portion of said magneto-resistive layer, all of said antiferromagnetic layer being located behind said first axis; and

spaced conductor leads each directly contacting said magneto-resistive layer at respective positions which are in front of said first axis, said spaced conductor leads overlapping said antiferromagnetic layer at positions which are behind said first axis.

5,703,739

COMPOSITE MAGNETIC HEAD

Yuuichi Hayakawa, Tokyo; Shinichi Saitoh, Gunma; Isao Matsuzaki, Gunma, and Masayoshi Kayama, Gunma, all of Japan, assignors to NEC Corporation, Tokyo, Japan

Continuation of Ser. No. 917,303, Jul. 23, 1992, abandoned. This application Jun. 14, 1994, Ser. No. 261,239

Claims priority, application Japan, Jul. 23, 1991, 3-182639

Int. Cl.⁶ G11B *3/00*

U.S. Cl. 360—121 **2 Claims**

1. A composite magnetic head for recording and reproducing data from a magnetic disk, comprising:

a slider made up of two parts;

a higher core provided in one of said two parts of said slider for recording and reproducing data from a magnetic disk having a high track density;

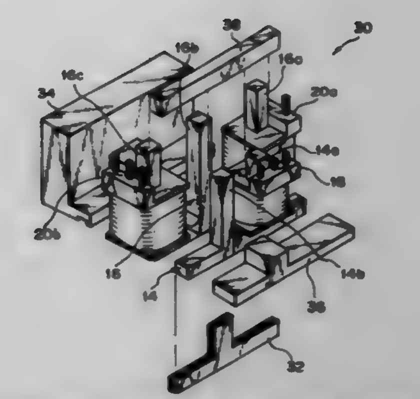

a lower core also provided in the one part of said slider and adjoining said higher core for recording and reproducing data from a magnetic disk having a low track density, said higher core and said lower core adjoining each other said higher core and said lower core each comprising a plurality of legs; and

a magnetic bar interposed between said legs of said higher core and said lower core wherein said magnetic bar contacts side surfaces of said legs of said higher core and side surfaces of said legs of said lower core to form a closed magnetic path.

5,703,740

TOROIDAL THIN FILM HEAD

Uri Cohen, Palo Alto, and Dennis R. Hollars, San Jose, both of Calif., assignors to Velocidata, Inc., Santa Clara, Calif.

Filed Oct. 7, 1996, Ser. No. 727,694

Int. Cl.⁶ G11B *5/147;5/17*

U.S. Cl. 360—126 **51 Claims**

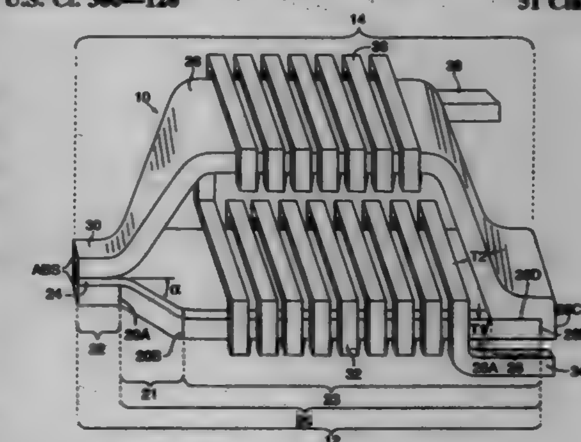

1. A toroidal thin film head (TFH) device comprising:

a substrate;

a bottom magnetic pole disposed on said substrate and including a bottom yoke-arm and a bottom pole-tip portion, said bottom yoke-arm having an elongated first back portion of a predetermined length and width, and a transitioning front portion, said first back portion having a first back-end;

a non-magnetic gap layer formed over at least said bottom pole-tip of said bottom magnetic pole;

a top magnetic pole disposed over said gap layer and overlaying said bottom magnetic pole, said top magnetic pole including a top yoke-arm of substantially the same shape and dimensions as said bottom yoke-arm and a top pole-tip portion, said top yoke-arm having an elongated second back portion of a predetermined length and width, and a transitioning front portion, said second back portion having a second back-end;

said first back portion of said bottom yoke-arm and said second back portion of said top yoke-arm being magnetically connected to each other at a back-closure region extending along substantially the entire width of said first and second back-ends such that said bottom magnetic pole and said top magnetic pole combine to form a magnetic core; and

a toroidal solenoid coil winding comprising at least one turn wrapped around at least one of said magnetic poles, for each of said at least one magnetic pole said solenoid coil winding comprising:
a first set of electrically conductive strips disposed below, and being insulated from, said magnetic pole;
a second set of electrically conductive strips disposed above, and being insulated from, said magnetic pole; and
said first set of electrically conductive strips and said second set of electrically conductive strips being joined along the sides of said magnetic pole in a manner to form a solenoid coil wrapped around said magnetic pole.

5,703,741
BELT-DRIVEN TAPE CARTRIDGE WITH TAPE VIBRATION DAMPING PIN
Andrew Wrobel, La Jolla, and Leonard C. Badour, San Diego, both of Calif., assignors to Gigatek Memory Systems, La Costa, Calif.
Filed Sep. 10, 1996, Ser. No. 711,530
Int. Cl.^{6} G11B *23/02*
U.S. Cl. 360—132 **24 Claims**

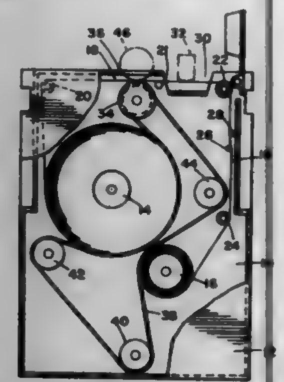

1. An improvement in a tape cartridge having a base plate, a plurality of tape path members mounted on a surface of said base plate, two spools rotatably mounted on said surface of said base plate, a plurality of belt guides, a flexible belt extending around said belt guides, and a magnetic tape threadably extending around said tape path members between said spools, the improvement comprising:
a damping pin disposed generally along a length of tape between a pair of said tape path members and fixedly mounted to said base plate perpendicularly to said surface;
said damping pin at all times having a constant wrap angle with respect to said tape; and
said damping pin at no time contacting said tape at a line deviating more than 0.020 inches from a direct tape run between said pair of tape path members in a direction perpendicular to said direct tape run.

5,703,742
UNIVERSAL CASSETTE CARTRIDGE
Jeffrey S. Thiessen, Champlin; John M. Enga, Crystal, and Hector F. Gonzalez, Rochester, all of Minn., assignors to Geneva Group of Companies, Inc., Minneapolis, Minn.
Filed Oct. 31, 1996, Ser. No. 741,570
Int. Cl.^{6} G11B *5/41*
U.S. Cl. 360—132 **6 Claims**

1. A universal tape drive cleaning cartridge, comprising:
a housing having a top and a bottom, said bottom having first and second recognition openings spaced apart along a side of said housing; and
a slide mechanism having first and second tabs at spaced apart locations thereon, said slide mechanism slidably movable between a first position in which said first tab covers said first

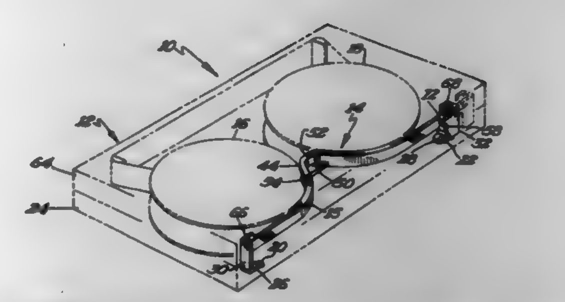

recognition opening and said second recognition is unobstructed, and a second position in which said second tab covers said second recognition opening and said first recognition opening is unobstructed.

5,703,743
TWO TERMINAL ACTIVE ARC SUPPRESSOR
Tony J. Lee, Pullman, Wash., assignor to Schweitzer Engineering Laboratories, Inc.
Filed Apr. 29, 1996, Ser. No. 641,112
Int. Cl.^{6} H02H *3/00*
U.S. Cl. 361—6 **24 Claims**

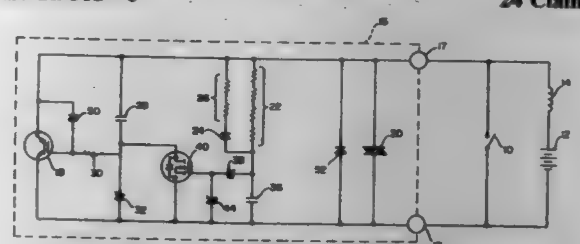

1. A circuit for suppression of arcing across electrical contacts, comprising:
a power transistor connected across the contacts;
capacitance means connected between the contacts and the power transistor but not directly across the contacts, sufficient that the power transistor quickly turns on when the contacts begin to open, providing a current path around the contacts, thereby preventing arcing across the contacts;
means for turning off the power transistor following sufficient separation of the contacts to prevent arcing, wherein turning off of the power transistor is sufficiently rapid that a substantial amount of load energy remains to be dissipated; and
voltage limiting means to limit any flyback voltage resulting from the power transistor turning off to a selected level and to dissipate remaining load energy.

5,703,744
CIRCUIT SUBSTRATE INCLUDING ANODIZATION CONTROL MEANS
Akihito Jinda, Nara-ken, Japan, assignor to Sharp Kabushiki Kaisha, Osaka, Japan
Filed May 22, 1996, Ser. No. 651,514
Claims priority, application Japan, May 25, 1995, 7-126913
Int. Cl.^{6} H01L *27/01;29/76;29/04*
U.S. Cl. 361—59 **16 Claims**

1. A circuit substrate comprising:
a wiring mainly formed of a metal material, the wiring having an end portion used as a electrode;
a terminal for applying a voltage to the wiring to anodize the wiring, the terminal being connected to another end portion of the wiring; and
an anodization control portion for controlling a degree of anodization of the wiring, the anodization control portion being a portion of the wiring which is closer to the another end portion connected to the terminal than to the end portion serving as the electrode,

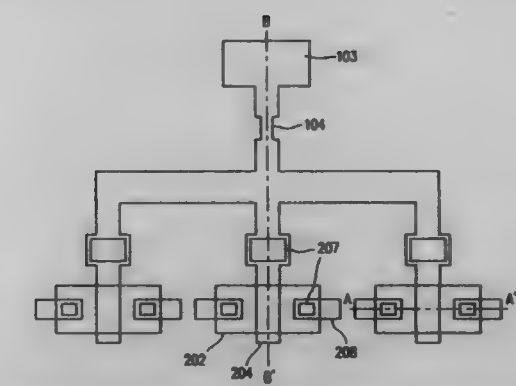

wherein the anodization control portion is anodized by the voltage applied by the terminal to form an insulator, and
wherein at least one of either a width or a thickness of the anodization control portion is determined so that an anodization film having a predetermined thickness is formed on the surface of the end portion of the wiring when the anodization of the anodization control portion is completed.

5,703,745
SYSTEM FOR DETECTION OF TRANSIENTS FROM A COUPLING CAPACITOR VOLTAGE TRANSFORMER USED IN A PROTECTIVE RELAY
Jeffrey B. Roberts, Moscow, Id., and Daqing Hou, Pullman, Wash., assignors to Schweitzer Engineering Laboratories, Inc., Pullman, Wash.
Filed Oct. 20, 1995, Ser. No. 546,226
Int. Cl.^{6} H02H *3/38*
U.S. Cl. 361—89 **12 Claims**

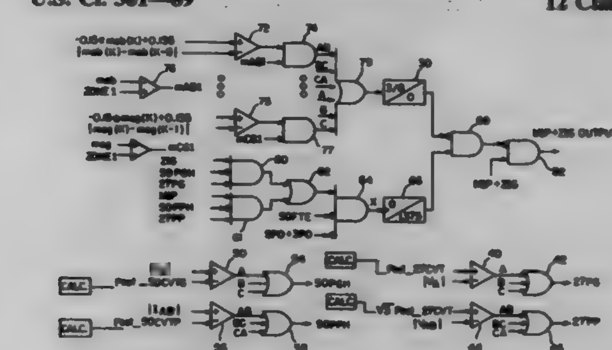

1. A system for detecting and compensating for a transient signal from a coupling capacitor voltage transformer used in a protective relay for a power system, comprising:
means for detecting a low voltage condition on the power transmission line which would otherwise result in a trip signal to a circuit breaker for the system;
means for detecting a high current condition on the power transmission line;
means for time delaying the trip signal if a high current condition is not present when the low voltage condition is detected; and
means for by-passing a remaining portion of the time delay, such that a trip signal is sent to the circuit breaker prior to expiration of the time delay, if a fault impedance determination achieves a selected characteristic prior to completion of time delay.

5,703,746
ELECTRIC JUNCTION BOX AND ELECTRIC CURRENT DISTRIBUTION SYSTEM
Takahiro Onizuka, and Yuuji Saka, both of Yokkaichi, Japan, assignors to Sumitomo Wiring Systems, Ltd., Japan
Filed Feb. 16, 1996, Ser. No. 602,988
Claims priority, application Japan, Feb. 23, 1995, 7-035082
Int. Cl.^{6} H02H *5/04*
U.S. Cl. 361—106 **20 Claims**

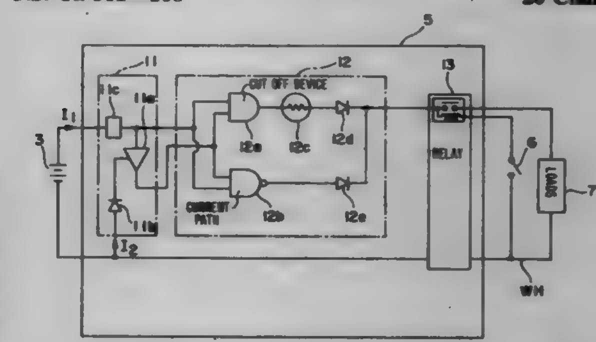

1. A junction box for use in connection with an electric current distribution system comprising
a current detector having a detector input and a detector output, a current control having a control input and a control output,
said detector input adapted for electrical connection to a source of electric current and a load output from a load, said detector output electrically connected to said control input, said control output adapted to be electrically connected to a load input to said load,
said current detector adapted to compare an input current from said source with an output current from said load, said current detector outputting, through said detector output, a normal state signal when said input current and said output current are substantially equal, said current detector outputting, through said detector output, an abnormal state signal when said input current and said output current are not substantially equal,
said control adapted to receive said normal signal and said abnormal signal through said control input, when said normal signal is received, said control directs said input current along a normal current path to said load input, when said abnormal signal is received, said control directs said input current to a current cutoff adapted to prevent said input current from reaching said load, said cutoff comprising a cutoff device whose electrical resistance varies with temperature.

5,703,747
MULTICHIP SEMICONDUCTOR STRUCTURES WITH INTERCHIP ELECTROSTATIC DISCHARGE PROTECTION, AND FABRICATION METHODS THEREFORE
Steven Howard Voldman, 50 Loomis St., Burlington, Vt. 05401, and Paul Evans Bakeman, Jr., 3 Bedford Green, South Burlington, Vt. 05403
Filed Feb. 22, 1995, Ser. No. 392,461
Int. Cl.^{6} H02H *3/22*
U.S. Cl. 361—111 **19 Claims**

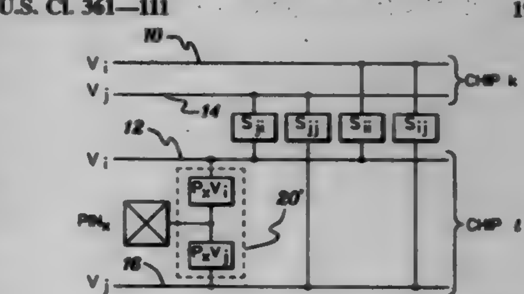

1. A multichip semiconductor device structure comprising:
a first chip having a first planar main surface;

a second semiconductor device chip having a second planar main surface, said first chip and said second semiconductor device chip being stacked together such that said first planar surface of said first chip is parallel to said second planar main surface of said second semiconductor device chip; and
interchip electrical discharge suppression means electrically coupling said first chip and said second semiconductor device chip for suppressing an electrical discharge occurring therebetween.

5,703,748
SOLENOID DRIVER CIRCUIT AND METHOD
Gary Chris Fulks, Spring Valley, and William Dale Cornwell, Jr., Beavercreek, both of Ohio, assignors to General Motors Corporation, Detroit, Mich.
Filed May 10, 1996, Ser. No. 644,492
Int. Cl.⁶ H01H *47/28*
U.S. Cl. 361—153 **3 Claims**

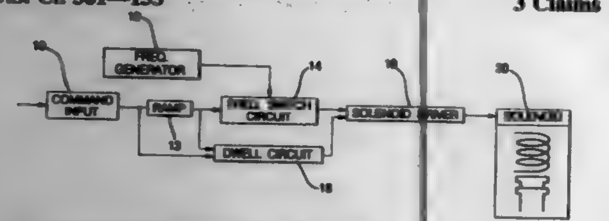

1. A solenoid driver circuit comprising:
a frequency generator providing an output pulse signal;
a ramp circuit receiving an input command and responsively providing a ramp signal;
a frequency switching circuit coupled to the ramp circuit and frequency generator receiving the ramp and pulse signals and responsively providing a time varying pulse signal to a solenoid, wherein the time varying pulse signal has an initial duty cycle and then decreases with time;
a dwell circuit, receiving the input command and responsive thereto, for a first time period allowing the frequency switching circuit to control the solenoid and then, after the first time period, providing an on signal to the solenoid, maintaining the solenoid in the on position.

5,703,749
SAFETY CONTROL SYSTEM RESPONSIVE TO CARBON MONOXIDE SMOKE AND THE LIKE
Romeo Prasad, 10 Warren La., Windsor, Conn. 06095
Continuation of Ser. No. 347,851, Dec. 1, 1994, abandoned. This application Oct. 22, 1996, Ser. No. 735,097
Int. Cl.⁶ H01H *47/22*
U.S. Cl. 361—170 **12 Claims**

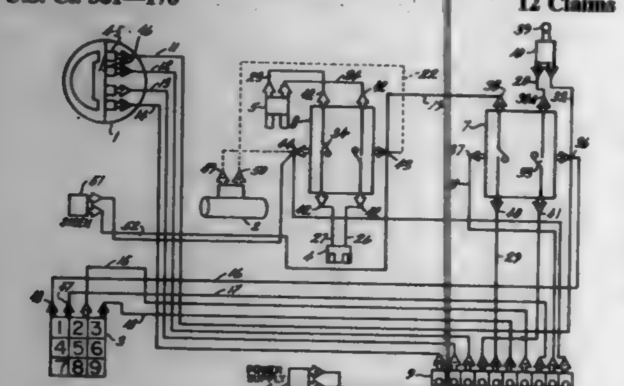

1. Apparatus for preventing injury from a noxious gas which comprises:
a shut off circuit for interrupting a source of electricity to an electrical appliance and interrupting a source of gas to a gas appliance;
a controller for controlling said shut off circuit, said controller having first and second states;
a sensor for sensing the presence of a noxious gas, said sensor being coupled to said controller to cause a change from said first state to said second state therein when the presence of a noxious gas exists, said change to said second state therein causing said shut off circuit to interrupt the source of electricity and the source of gas.

5,703,750
PROPORTIONAL SOLENOID VALVE CONTROL SYSTEM
Yong-ho Kim, Seoul; Young-sik Lee, Kyonggi-do, and Hee Chun, Seoul, all of Rep. of Korea, assignors to Samsung Electronics Co., Ltd., Suwon, Rep. of Korea
Filed Apr. 24, 1996, Ser. No. 637,078
Claims priority, application Rep. of Korea, Sep. 14, 1995, 95-30117
Int. Cl.⁶ H01H *47/28*
U.S. Cl. 361—187 **14 Claims**

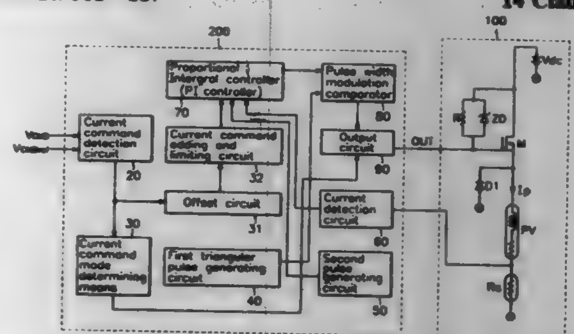

11. A proportional solenoid valve control system for controlling a current in a proportional solenoid valve, comprising:
a proportional valve;
a current detection circuit which detects a current flowing in said proportional solenoid valve and generates a solenoid current signal;
a proportional integrator controller which receives a first triangular pulse signal alternating between a positive value and a negative value and said solenoid current signal and forms an error signal;
a pulse width modulation comparator which receives and compares a second triangular pulse signal and said error signal to form a pulse width output signal; and
an output circuit which generates a switching signal having a duty ratio corresponding to said pulse width output signal to control said proportional valve.

5,703,751
ELECTRICAL APPARATUS WITH A DETACHABLE POWER SUPPLY BASE
Ming-Chou Huang, No. 16, Lane 43, Hua Cheng Road, Hsin Chuang, Taipei Hsien, Taiwan
Filed May 15, 1996, Ser. No. 647,627
Int. Cl.⁶ H02B *1/26*
U.S. Cl. 361—625 **9 Claims**

1. An electrical apparatus with a detachable power supply base, comprising:
a power supply base, said power supply base comprising a casing defining at least one storage chamber, two coupling channel bars respectively raised from said casing and facing each other, and two electrical conductive plates respectively installed in said coupling channel bars;
an electrical apparatus having two outward flanges raised from two opposite sides of a base thereof and adapted for detachably coupling to said coupling channel bars to secure said electrical apparatus to said power supply base, and two elec-

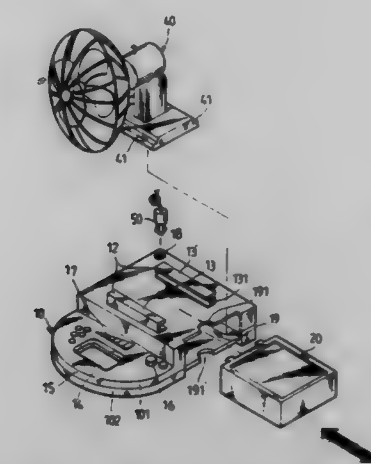

trical conductive plates respectively installed in said outward flanges, the electrical conductive plates of said outward flanges being disposed in contact with the electrical conductive plates of said coupling channel bars when said outward flanges are forced into engagement with said coupling channel bars; and
at least one power supply device respectively mounted in the at least one storage chamber of said power supply base, each of said at least one power supply device having two opposite terminals respectively disposed in contact with the electrical conductive plates of said coupling channel bars when installed in the at least one storage chamber of said power supply base.

5,703,752
HEAT DISSIPATING APPARATUS FOR A SEMICONDUCTOR DEVICE FOR USE IN A MOTOR DRIVE
Suk Ha Woo, Kyunggi-Do, Rep. of Korea, assignor to Samsung Electro-Mechanics Co., Ltd., Kyunggi-do, Rep. of Korea
Filed Aug. 23, 1995, Ser. No. 518,505
Claims priority, application Rep. of Korea, Aug. 23, 1994, U94-21228
Int. Cl.⁶ H05K *7/20*
U.S. Cl. 361—704 **16 Claims**

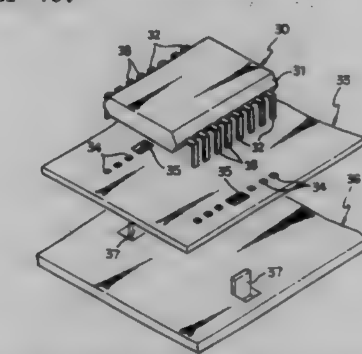

1. A heat dissipating apparatus for a semiconductor device for use in a motor drive, comprising:
a printed circuit board having an upper surface on which a semiconductor device having a plurality of leads on its package is mounted wherein at least some of said plurality of leads are heat dissipation leads;
a separate heat dissipating member attached to a bottom surface of said printed circuit board and located totally therebelow for dissipating heat from said semiconductor device;
said printed circuit board having holes formed of a predetermined diameter in said printed circuit board for receiving said heat dissipation leads; and
said heat dissipating member having holes formed of a predetermined diameter so that said heat dissipating leads received by said printed circuit board are in direct physical contact with walls of said holes formed in said heat dissipation member.

5,703,753
MOUNTING ASSEMBLY FOR MULTIPLE CHIP MODULE WITH MORE THAN ONE SUBSTRATE AND COMPUTER USING SAME
Sammy L. Mok, Cupertino, Calif., assignor to MicroModule Systems Inc., Cupertino, Calif.
Continuation-in-part of Ser. No. 551,432, Nov. 1, 1995, abandoned, which is a continuation-in-part of Ser. No. 389,905, Feb. 16, 1995, Pat. No. 5,619,399. This application Jul. 9, 1996, Ser. No. 677,178
Int. Cl.⁶ H05K *7/20*
U.S. Cl. 361—715 **22 Claims**

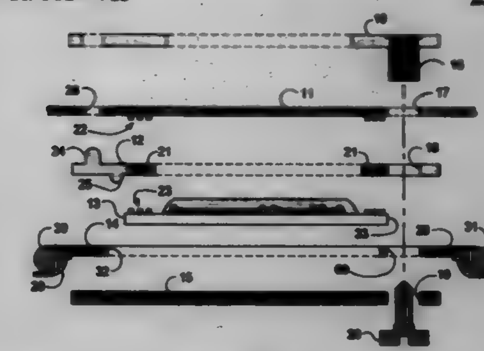

1. An electronic assembly, comprising:
a board having a surface including an array of board contacts;
a thermally conductive base having a first surface and a second surface;
a first substrate on the first surface of the thermally conductive base including at least one integrated circuit chip and an interconnect structure for the integrated circuit mounted on the first substrate;
a second substrate on the first surface of thermally conductive base adjacent the first substrate including an interconnect structure and an array of circuit contacts;
conductors connecting the interconnect structure on the first substrate with the interconnect structure on the second substrate;
a connector between the board and the second substrate, including conductors between circuit contacts in the array of circuit contacts on the second substrate and board contacts in the array of board contacts on the board;
a heat spreader assembly; and
a fastener which fastens the thermally conductive base to the board and to the heat spreader assembly such that thermal contact is made between the thermally conductive base and the heat spreader assembly, and electrical contact is made through the connector between the array of circuit contacts and the array of board contacts.

5,703,754
FASTENERLESS SEALED ELECTRONIC MODULE
Lee R. Hinze, Kokomo, Ind., assignor to Delco Electronics Corporation, Kokomo, Ind.
Filed Feb. 26, 1996, Ser. No. 606,701
Int. Cl.⁶ H05K *1/18*
U.S. Cl. 361—736 **5 Claims**

1. A fastenerless electronic module comprising:
a cast housing having a peripheral wall and a continuous shelf along the wall;
a circuit board seated on the shelf such that an outboard surface of the circuit board is exposed and an inboard surface of said circuit board carrying electronic components faces into the housing, the circuit board having edges seated on the shelf

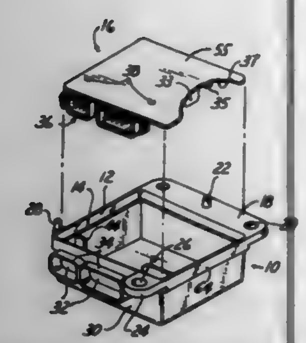

and adjacent the peripheral wall to define an interface of the circuit board and the housing;
a connector mounted on the inboard surface of said circuit board and having ribs that mechanically interlock with web means formed on the peripheral wall of said housing to rigidly couple the connector to the housing and to isolate the circuit board from mechanical stresses applied to the connector; and
an adhesive sealant on the outboard side of the circuit board, the adhesive sealant covering the interface of the circuit board and the housing so as to secure the circuit board to the wall and seal the circuit of the circuit board and the housing.

5,703,755
FLEXIBLE ELECTRONIC CARD AND METHOD
H. Kelly Flesher, and Albert P. Youmans, both of Los Gatos, Calif., assignors to Aptek Industries, Inc., San Jose, Calif.
Continuation of Ser. No. 415,185, Apr. 3, 1995, abandoned. This application May 7, 1997, Ser. No. 852,676
Int. Cl.[6] H05K *1/14*
U.S. Cl. 361—737 **8 Claims**

1. A flexible electronic card for use with an electronic card reader comprising a flexible substrate formed of plastic and having dimensions of approximately 3⅜" by 2⅛" such that it can fit into a conventional billfold, a flexible semiconductor device having an area greater than 100 mils by 100 mils carried by the flexible substrate; and being accessible electronically by the electronic card reader characterized in that the; card and the semiconductor device carried thereby can withstand bending over a 2" radius without breaking or damaging the semiconductor device, said semiconductor device having edges and having a substantially uniform thickness in the range of 2 to 7 mils and being free of tapered edges, said semiconductor device having a back surface; that is ground and polished with peak-to-peak variations of less than 2 microns to provide a semiconductor device with substantially reduced stress.

5,703,756
Patent Not Issued For This Number

5,703,757
ELECTRONIC VEHICULAR JUNCTION BOX HAVING REDUCED SIZE AND WEIGHT
Earl J. Hayes, Northville; Timothy A. Hutchinson, Madison Heights; David A. Hein, Sterling Heights; Alexander Shen, Dearborn, and Michael J. Pike-Biegunski, Milford, all of Mich., assignors to Alcoa Fujikura Limited, Brentwood, Tenn.
Filed Jan. 31, 1996, Ser. No. 594,965
Int. Cl.[6] H05K *5/00*
U.S. Cl. 361—752 **2 Claims**

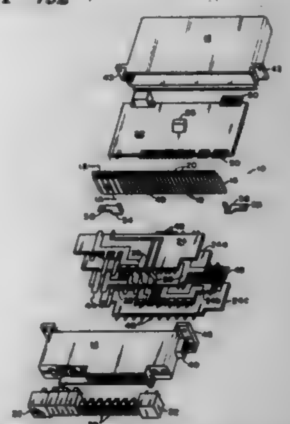

1. A junction box for motor vehicles, comprising: first and second housing portions for receiving and containing respectively low and high electrical current circuitboards, said circuit boards extended parallel to a generally common plane, said housing portions extending in said common plane when connected together to form a housing unit in said plane, and
a planar insulating panel member containing buses and integral, insulation displacement terminals, said planar panel being located between the housing portions in a plane generally perpendicular to the common plane of the housing portions and unit for directly receiving insulated wires of an electrical harness to electrically connect the same to said buses and to the circuits of electrical components associated with said circuitboards,
said first and second housing portions being abutted and fastened together on opposed sides of the planar panel member.

5,703,758
ELECTRONIC DEVICE CASING INCLUDING LIVING SPRING BUTTON AND METHOD
Thomas D. Snyder, Raleigh, and I. Nelson Wakefield, Cary, both of N.C., assignors to Ericsson Inc., Research Triangle Park, N.C.
Filed Sep. 13, 1996, Ser. No. 713,509
Int. Cl.[6] H05K *5/00*
U.S. Cl. 361—752 **14 Claims**

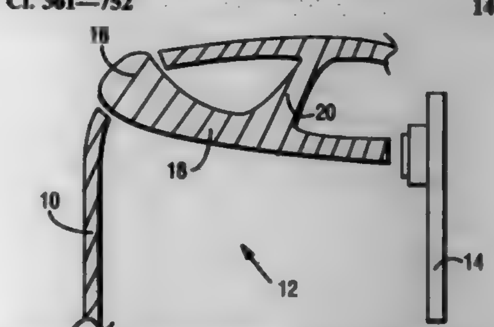

1. A casing for an electronic device, the electronic device including a printed circuit board (PCB) having a plurality of designated contacts, the casing comprising a spring button assembly formed integral therewith, said spring button assembly having a press button disposed facing an exterior of the casing, a PCB contact extension disposed facing an interior of the casing, and a resilient

connector connecting said press button and said PCB contact extension to the casing.

5,703,759
MULTI-CHIP ELECTRICALLY RECONFIGURABLE MODULE WITH PREDOMINANTLY EXTRA-PACKAGE INTER-CHIP CONNECTIONS
Stephen M. Trimberger, San Jose, Calif., assignor to Xilinx, Inc., San Jose, Calif.
Filed Dec. 7, 1995, Ser. No. 569,032
Int. Cl.[6] H05K *7/02*
U.S. Cl. 361—777 **13 Claims**

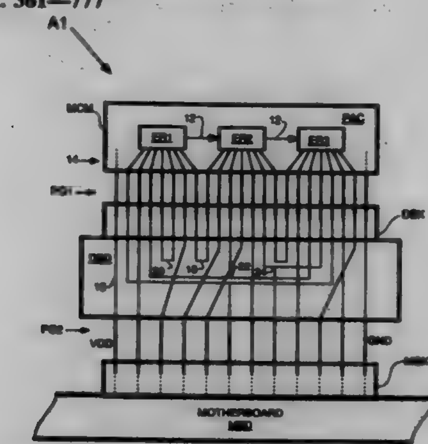

1. An assembly comprising:
plural electrically reconfigurable integrated circuits, each of said electrically reconfigurable integrated circuits having plural input-output nodes; and
a package for enclosing and providing interfacing for said electrically reconfigurable integrated circuits, said package including plural conductive interface elements for external interfacing of said electrically reconfigurable integrated circuits, said package providing intra-package connections between said electrically reconfigurable integrated circuits by electrically connecting predetermined respective ones of their input-output nodes to each other, said package providing for extra-package connections by electrically connecting predetermined ones of said input-output nodes to respective ones of said conductive interface elements, the number of said input-output nodes in said extra-package connections exceeding the number of said input-output nodes in said intra-package connections.

5,703,760
MOTHER BOARD WITH FLEXIBLE LAYOUT FOR ACCOMMODATING COMPUTER SYSTEM DESIGN OPTIONS
Xiao Feng Zhu, Fremont, Calif., assignor to Micronics Computers Inc., Fremont, Calif.
Filed Dec. 7, 1995, Ser. No. 568,661
Int. Cl.[6] H01R *9/09;23/70;29/00*
U.S. Cl. 361—785 **21 Claims**

1. A computer apparatus comprising a mother board for providing a flexible circuit component layout thereon, comprising:
a plurality of circuit card connector slots;
circuit cards seated in at least some of the circuit card connector slots;
F memory footprint sites within a memory region defined on the mother board;
M memory module connectors of T types where F>M, each one emplaced in one of the F footprint sites within the memory region, the module connectors arranged in any configuration selected from multiple possible configurations permitted by M module connectors of T types in F footprint sites leaving F

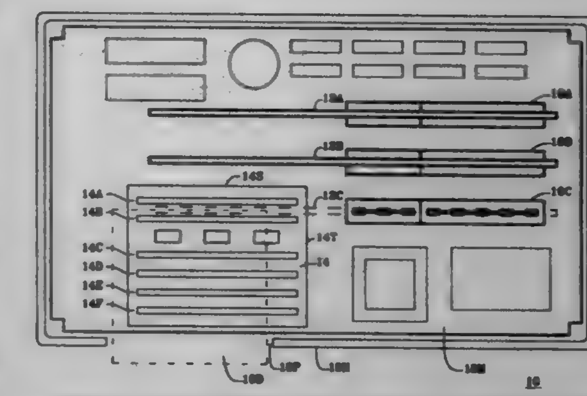

minus M vacant footprint sites without a module connector emplaced therein; and
M memory modules having a seated end with contacts for engaging the module connector and a distant end, one memory module seated in each of the module connectors emplaced in the memory region.

5,703,761
SHIELDING FOR FLAT MODULES
Reinhold Heiss, Deutenhausen, Germany, assignor to Siemens Aktiengesellschaft, Munich, Germany
Filed Aug. 19, 1996, Ser. No. 699,327
Claims priority, application Germany, Sep. 7, 1995, 295 14 398.3
Int. Cl.[6] H05K *7/14*
U.S. Cl. 361—800 **3 Claims**

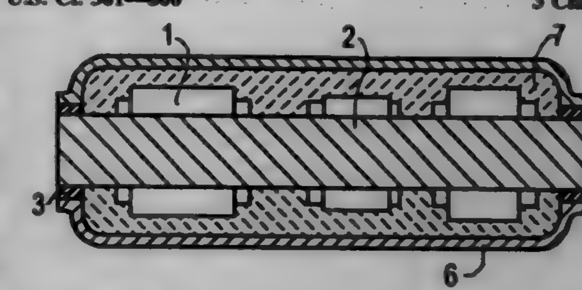

1. A shielding for flat modules formed of high-frequency components on a circuit board in information technology equipment, comprising:
a surface extending only over a region of components to be shielded and which is connected in an electrically conductive manner with a contact surface on the circuit board, said shielding surface surrounding the components and conducting a shielding potential; and
the shielding surface comprising a metal lamination of a deep-drawn plastic film, the plastic film laminated with the conductive material being welded with the contact surface of the circuit board that conducts the shielding potential.

5,703,762
ARRANGEMENT FOR CONNECTING WIRING BACKPLANES AND MODULE CIRCUIT BOARDS
Karl Zell, Moritz-v-Schwind-Weg 80, 82343 Niederpoecking, and Peter Seidel, Mittenwalderstr. 256, 82194 Groebenzell, both of Germany
Filed Jun. 20, 1995, Ser. No. 492,791
Claims priority, application Germany, Jun. 27, 1994, 9410342 U
Int. Cl.[6] H05K *9/00*
U.S. Cl. 361—816 **5 Claims**

1. A system, comprising:
a module circuit board;
a wiring backplane;

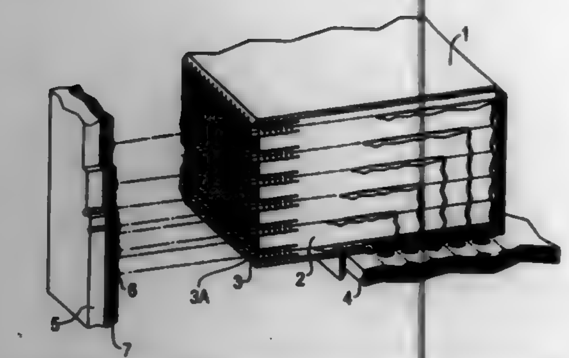

a contact housing for connecting the module circuit board to the wiring backplane;

said contact housing being formed of a metal shielding compartment, portions of the metal shielding compartment facing toward the wiring backplane having a plurality of zig-zag shaped corrugated spring elements having terminal ends; and

the wiring backplane having a metal layer for contacting to and at the terminal ends of said zig-zag-shaped corrugated spring elements.

5,703,763

POWER SUPPLY APPARATUS WITH IMPROVED EFFICIENCY

Patrick E. G. Smeets, Eindhoven, Netherlands, assignor to U.S. Philips Corporation, New York, N.Y.

Filed Aug. 29, 1996, Ser. No. 705,550

Claims priority, application European Pat. Off., Sep. 1, 1995, 95202364

Int. Cl.[6] **H02M** *3/335*

U.S. Cl. 363—20 **1 Claim**

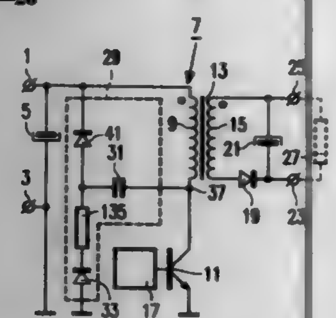

1. A power supply apparatus for converting an electric direct voltage, acting as an input voltage, into an output voltage, comprising positive and negative input terminals which are arranged to receive the input voltage, a first series connection which consists of at least one coil and a controllable switching element and interconnects the input terminals, and a peak-limiting circuit for limiting the maximum voltage across the switching element, said peak-limiting circuit comprising at least a capacitor and a second series connection which consists of a first rectifier element and a resistor and is connected to the positive input terminal as well as to the junction of the coil and the switching element, characterized in that the peak-limiting circuit also comprises a second rectifier element which connects one end of the second series connection to the positive input terminal, the forward directions of the rectifier elements in the part of the peak-limiting circuit formed by the first and the second rectifier elements and the resistor being the same, the other end of the second series connection being connected to the negative input terminal, and the capacitor being connected between the anode of the second rectifier element and the junction of the coil and the switching element.

5,703,764

SWITCHED-MODE POWER SUPPLY HAVING STANDBY OPERATION

Wolfgang Hermann, Tennenbronn, and Jean-Paul Louvel, Villingen-Schwenningen, both of Germany, assignors to Deutsche Thomson Brandt GmbH, Villingen-Schwennigen, Germany

Filed May 3, 1996, Ser. No. 647,846

Claims priority, application Germany, May 23, 1995, 195 18 863.2

Int. Cl.[6] **H02M** *3/24*

U.S. Cl. 363—21 **8 Claims**

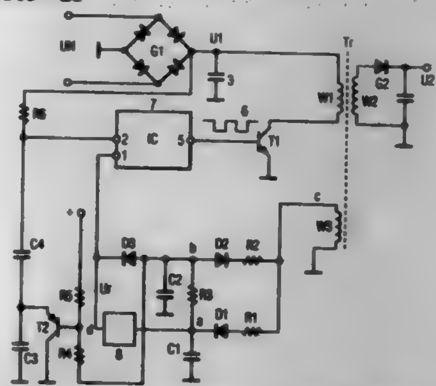

1. A switched-mode power supply having standby operation with a burst mode, comprising:

a transformer including a primary winding and a secondary winding,

a switching transistor coupled in series with said primary winding,

an integrated circuit for controlling said switching transistor,

a first rectifier circuit coupled to a terminal of a third transformer winding and generating a control voltage for said integrated circuit,

a second rectifier circuit providing a voltage of opposite polarity with respect to said first rectifier circuit and having a time constant which is appreciably shorter than a time constant of the first rectifier circuit, and

the outputs of the two rectifier circuits being coupled together to produce a sum voltage, the sum voltage being coupled to a control input of the integrated circuit for inhibiting operation of the integrated circuit in case of a standby condition periodically caused by an overshooting at a time depending upon the time constant of the first rectifier circuit.

5,703,765

FLYBACK CONVERTER HAVING A REGULATED OUTPUT VOLTAGE

Josef Preis, Mü nchen, Germany, assignor to Siemens Aktiengesellschaft, Munich, Germany

PCT No. PCT/EP95/00163, § 371 Date Jul. 18, 1996, § 102(e) Date Jul. 18, 1996, PCT Pub. No. WO95/20261, PCT Pub. Date Jul. 27, 1995

PCT Filed Jan. 17, 1995, Ser. No. 676,353

Claims priority, application European Pat. Off., Jan. 20, 1994, 94100822.9

Int. Cl.[6] **H02M** *3/335*

U.S. Cl. 363—21 **19 Claims**

1. A flyback converter, comprising:

an electronic switch which is connected in series with a primary winding of a transformer in a main circuit on a primary side of the transformer, the electronic switch being controllable by a control device;

on a secondary side of the transformer a main circuit which is connected to a secondary winding of the transformer, the main circuit having a first diode in a series path and an energy-storage capacitor in a subsequent parallel path, connected in parallel with an output in the transformer;

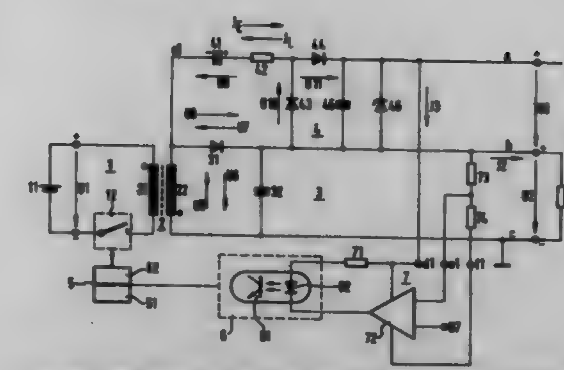

a regulating arrangement connected to an output of the flyback converter, the regulating arrangement supplied with an auxiliary voltage, a duty ratio of the control voltage which controls the electronic switch being limited to a predetermined upper limit;

an auxiliary circuit having an input connected to the first diode of the main circuit on the secondary side and the auxiliary circuit having one pole of an output connected to the input;

the auxiliary circuit having an RC series circuit in a series path on the input side, a second diode in the downstream parallel path, a third diode in a series path following the parallel path, and a capacitor in parallel with the output;

the regulating arrangement having an auxiliary voltage input supplied with an auxiliary voltage which is a sum of the output voltage of the flyback converter and the output voltage of the auxiliary circuit;

the second diode polarized such that the second diode is reverse biased when the first diode is forward biased;

the third diode polarized such that the third diode is reverse biased when the second diode is forward biased.

5,703,766

CAPACITOR POWER SUPPLY FOR INTERMITTENT TRANSMISSION

Philip H. Sutterlin, Saratoga; J. Marcus Stewart, San Jose, and Amy O. Hurlbut, San Francisco, all of Calif., assignors to Echelon Corporation, Palo Alto, Calif.

Filed Mar. 5, 1996, Ser. No. 610,831

Int. Cl.[6] **H02J** *3/36;* **H04B** *5/02*

U.S. Cl. 363—35 **9 Claims**

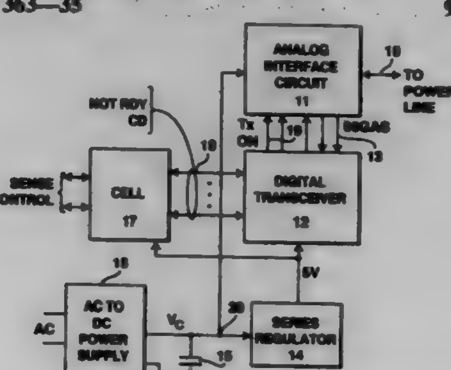

1. A method for operating a transmitter which receives power from a DC power supply and a capacitor, where the DC power supply charges the capacitor to a maximum potential of Vmax, comprising the steps of:

inhibiting transmission by the transmitter when the potential on the capacitor drops to a first predetermined potential;

detecting when the potential on the capacitor reaches a second predetermined potential, the second potential lying between the first potential and Vmax; and,

permitting transmission by the transmitter after waiting a predetermined period of time following the detection of the second potential.

5,703,767

APPARATUS AND METHOD TO PREVENT SATURATION OF INTERPHASE TRANSFORMERS

Eric J. Stacey, Pittsburgh, Pa., assignor to Electric Power Research Institute, Inc., Palo Alto, Calif.

Filed Apr. 12, 1996, Ser. No. 631,185

Int. Cl.[6] **H02M** *1/12*

U.S. Cl. 363—40 **14 Claims**

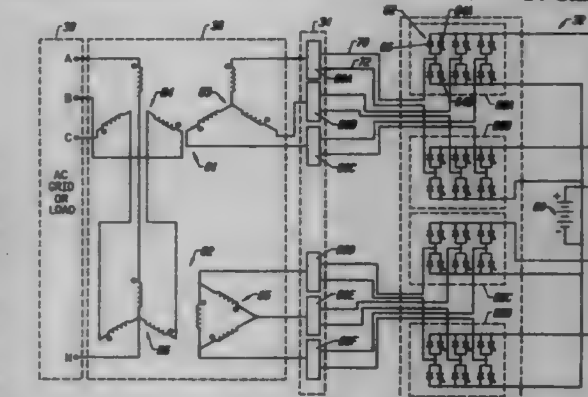

1. In a power circuit of the type including a set of interphase transformers and an inverter connected to said set of interphase transformers, said inverter generating a set of inverter pole output signals that are applied to said set of interphase transformers, said set of inverter pole output signals including a first inverter pole output signal and a second inverter pole output signal, said first inverter pole output signal having a predetermined phase displacement from said second inverter pole output signal, the improvement comprising:

a control circuit to identify a system transient, to regulate said inverter such that said inverter reduces said predetermined phase displacement between said first inverter pole output signal and said second inverter pole output signal in response to said system transient, and to restore said predetermined phase displacement between said first inverter pole output signal and said second inverter pole output signal after said system transient.

5,703,768

MOTOR CONTROL APPARATUS

Shigeo Kanna, and Akihito Uetake, both of Suwa, Japan, assignors to Seikon Epson Corporation, Tokyo

Filed Mar. 22, 1996, Ser. No. 620,585

Claims priority, application Japan, Mar. 24, 1995, 7-066585; Dec. 25, 1995, 7-337387

Int. Cl.[6] **H02M** *3/24;1/12*

U.S. Cl. 363—98 **35 Claims**

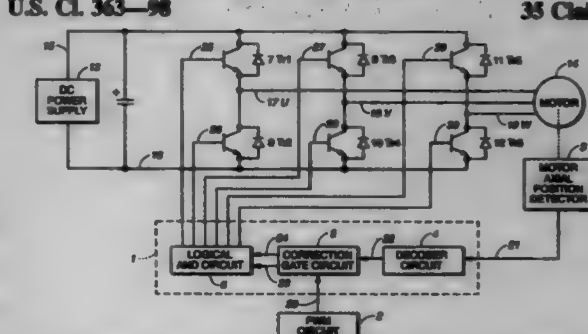

1. A motor control apparatus that controls the operation of a motor by means of a pulse wave modulated control inverter having a PWM signal changing from one state to another state at a first change point and a commutation signal changing from one state to another state at a second change point, wherein the commutation signal is based on an axial position of the motor, comprising:

correction means for setting, during motor operation, a time difference of the PWM signal at the first change point and the commutation signal at the second change point.

5,703,769

POWER SWITCH WITH INRUSH CURRENT CONTROL

Thomas P. Murray, Queensville, Canada, assignor to International Business Machines Corporation, Armonk, N.Y.

Filed Nov. 1, 1994, Ser. No. 332,963

Claims priority, application Canada, Nov. 15, 1993, 2,103,133

Int. Cl.[6] H02H *7/10*

U.S. Cl. 363—50 **23 Claims**

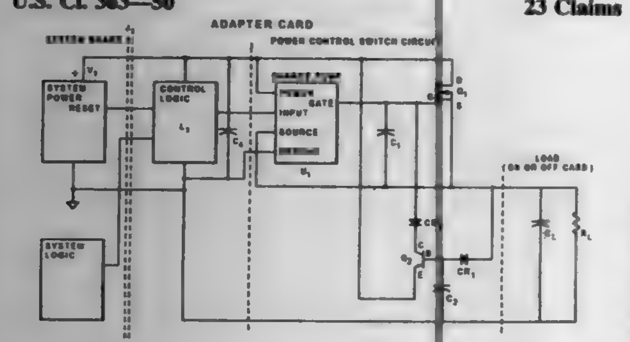

19. A power control circuit for coupling a load to a power source comprising:

a N-channel MOSFET transistor for coupling said load to said power supply through said transistor via its power terminals dependent upon a control voltage applied to a gate of said transistor, said transistor being connectable between said power source and said load, a drain of said transistor being connectable to said power source, and the source of said transistor being connectable to one node of said load, the other node of said load being grounded in reference to said power supply when connected to said power control circuit;

a charge pump circuit having its output connected to said gate to apply a controlled turn on signal to said transistor when said charge pump is activated;

wherein said controlled signal gradually increases until said transistor is biased into its fully on state;

a discharge circuit coupled to said gate of said transistor for quickly reducing the control voltage at said gate to turn said transistor off if power from said power source is interrupted, said discharge circuit comprising:

an NPN discharge transistor having its emitter coupled to said drain of said power coupling transistor and its collector coupled to said gate of said power control transistor;

the base of said NPN transistor being coupled to the non-grounded node of said load; and

a base capacitor connected between said base of said NPN transistor and ground to provide activation energy for said NPN transistor in event of power failure to turn said NPN transistor on and discharge the voltage present between said gate and drain terminals of said power coupling transistor turning it off;

blocking diodes being provided between the base connected terminal of said base capacitor and said load, and between said gate of said power control transistor and said collector of said NPN transistor to prevent undesirable current flow in aid NPN transistor.

5,703,770

METHOD AND APPARATUS FOR GENERATING A HIGH VOLTAGE

Jean Pierre Burtin, Egreve; Flavien Dobrowolski, Sinard, and Caryl Thome, Saint Egreve, all of France, assignors to Sames S.A., France

Filed Aug. 9, 1995, Ser. No. 513,027

Claims priority, application France, Sep. 16, 1994, 94 11340; Dec. 21, 1994, 94 15669

Int. Cl.[6] H02M *7/10*

U.S. Cl. 363—61 **20 Claims**

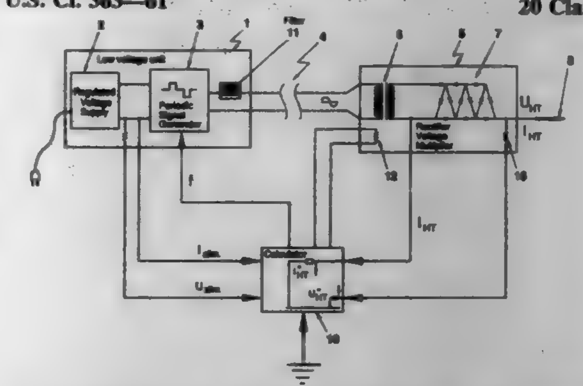

7. An apparatus for generating a high voltage by converting input power at a low voltage to output power at a high voltage, comprising: a low voltage unit connected to receive the input power to produce a periodic signal having a frequency; a rectifier voltage multiplier connected to receive the periodic signal to cause the rectifier voltage multiplier to produce the output power at a high voltage, wherein the ratio of output power to input power is a function of the frequency of the periodic signal; and means connected for continually adjusting the frequency of the periodic signal toward a value which maximizes the ratio of the output power and the input power.

5,703,771

VHF INVERTER WITH SELF REGULATION FOR ANY LOAD

Wilbur E. Wong; David M. Lusher, both of Torrance, and William B. Hwang, Los Angeles, all of Calif., assignors to Hughes Electronics, Los Angeles, Calif.

Filed Jul. 19, 1996, Ser. No. 690,247

Int. Cl.[6] H02M *7/538*

U.S. Cl. 363—134 **3 Claims**

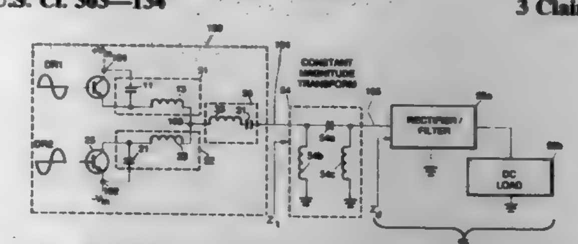

1. A VHF DC to AC inverter for providing power to a load circuit, the VHF DC to AC inverter comprising:

switching inverter means connected between first and second voltages for providing an inverter output; and

impedance transforming means connected between the switching inverter means and the load circuit, said impedance transforming means configured to present an input impedance having a magnitude that is substantially constant with variations of the load circuit, and a phase angle that varies with variations of the load circuit, said impedance transferring means comprising:

(i) a series capacitor connected between an output of the switching inverter means and an input of said load circuit,

(ii) a first shunt inductor connected between a first terminal of said capacitor and a reference potential, and

(iii) a second shunt inductor connected between a second terminal of said capacitor and the reference potential.

5,703,772

METHOD AND APPARATUS FOR CORRECTING DRIFT IN THE RESPONSE OF ANALOG RECEIVER COMPONENTS IN INDUCTION WELL LOGGING INSTRUMENTS

David R. Beard, Houston, Tex., assignor to Western Atlas International, Inc., Houston, Tex.

Filed Sep. 15, 1995, Ser. No. 529,281

Int. Cl.[6] G06F *19/00*

U.S. Cl. 364—422 **9 Claims**

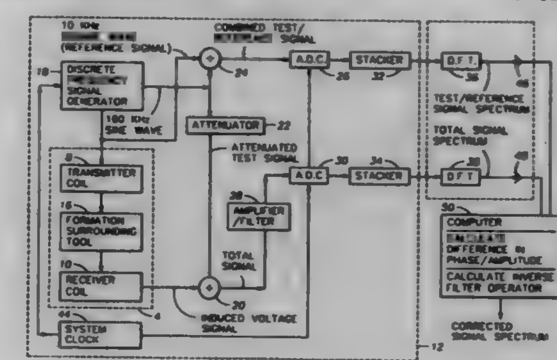

1. A method of determining amplitude and phase response of a receiver amplifier in an induction well logging instrument comprising:

generating an oscillating current having at least one frequency;

energizing a transmitter coil disposed on said instrument with said oscillating current;

generating a first test signal having a known phase and amplitude relationship with respect to said oscillating current, said first test signal having a different frequency than any frequency present in said oscillating current;

amplifying and detecting, in said receiver amplifier, voltages induced in a receiver coil disposed on said instrument and coupled to said amplifier, said voltages corresponding to electrical properties of an earth formation proximal to said instrument;

conducting a predetermined portion of said first test signal to said receiver amplifier, thereby causing said amplifier to generate a combined output comprising said first test signal and a signal resulting from said induced voltages;

combining said oscillating current with said first test signal to form a combined test/reference signal;

spectrally analyzing said combined test/reference signal and said combined output; and

comparing spectral analysis of said combined test/reference to spectral analysis of said combined output to determine response of said receiver amplifier at the frequency of said test signal.

5,703,773

REAL-TIME 2-DIMENSIONAL INVERSION PROCESS AND ITS APPLICATION TO INDUCTION RESISTIVITY WELL LOGGING

Leonty Abraham Tabarovsky, and Michael Boris Rabinovich, both of Houston, Tex., assignors to Western Atlas International, Inc., Houston, Tex.

Filed Feb. 8, 1996, Ser. No. 598,443

Int. Cl.[6] G06F *19/00*

U.S. Cl. 364—422 **37 Claims**

1. A method of inversion processing signals from an induction well logging instrument having a transmitter and a plurality of receivers at axially spaced apart locations, comprising:

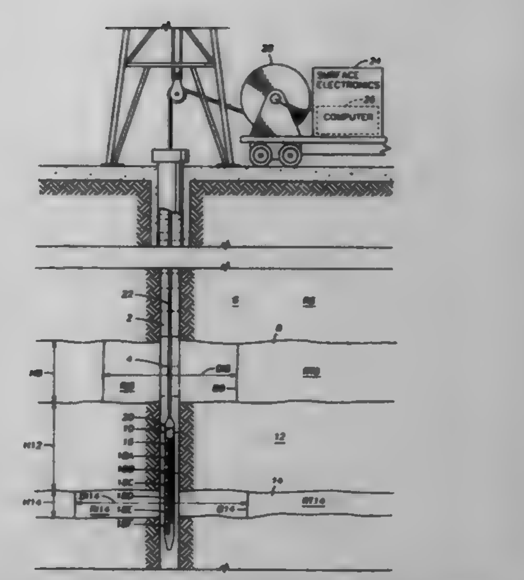

skin effect correcting responses of said receivers by extrapolating said receiver responses to zero frequency;

generating a model of media surrounding said instrument;

adjusting conductivities of elements of said model so that a measure of misfit between said skin-effect corrected receiver responses and simulated receiver responses based on said model is minimized; and

adjusting the geometry of said model so that said measure of misfit between said skin-effect corrected receiver responses and said simulated receiver responses based on said model is further minimized.

5,703,774

VARIABLE SLEW SELECTOR SWITCH SYSTEM

Andrew W. Houck, Woodinville, and Stephen R. Gibbs, Bellevue, both of Wash., assignors to The Boeing Company, Seattle, Wash.

Filed May 11, 1995, Ser. No. 438,976

Int. Cl.[6] G06F *3/02;19/00*

U.S. Cl. 364—424.06 **21 Claims**

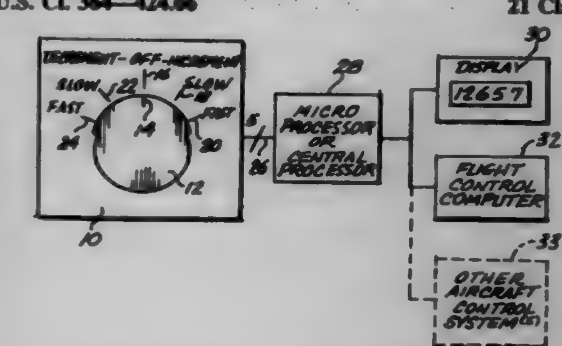

1. A variable slew selector switch system for controlling change in a numerical value input to a computer comprising:

a data input device having a plurality of discrete manually selectable states including a first state for selecting fast change in a numerical value, a second state for selecting slow change in the numerical value and a third state for selecting no change in a numerical value; and

a processor for automatically monitoring the selected state of the data input device and for changing the numerical value as follows:

(a) if the first state is selected for a period less than a first predetermined dwell time period, automatically change the numerical value by a first predetermined increment;

(b) if the first state is selected for a period greater than the first predetermined dwell time period, automatically substantially continuously change the numerical value at a first rate of change;

(c) if the second state is selected for a period less than a second predetermined dwell time period, automatically change the numerical value by a second predetermined increment different from the first predetermined increment;

(d) if the second state is selected for a period greater than the second predetermined dwell time period, automatically substantially continuously change the numerical value at a second rate of change different from the first rate of change; and

(e) if the third state is selected, do not change the numerical value.

5,703,775

VEHICLE STEERING CONTROL SYSTEM

Yorihisa Yamamoto; Yutaka Nishi; Takashi Nishimori; Hiroyuki Tokunaga, and Hideki Machino, all of Saitama-ken, Japan, assignors to Honda Giken Kogyo Kabushiki Kaisha, Tokyo, Japan

Continuation-in-part of Ser. No. 122,615, Sep. 16, 1993, Pat. No. 5,528,497. This application Jun. 5, 1995, Ser. No. 463,969

Claims priority, application Japan, Jul. 28, 1994, 6-193636

Int. Cl.⁶ B60K *41/00;* **B62D** *5/04*

U.S. Cl. 364—424.051 **5 Claims**

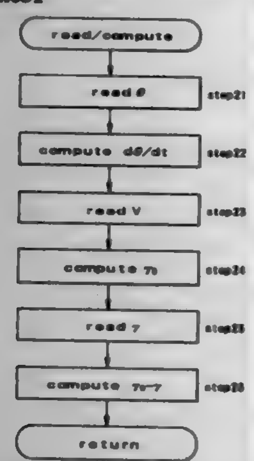

1. A vehicle steering control system, comprising steering torque input means;

powered steering control means for applying a first actuating torque to steerable wheels of a vehicle according to a steering torque applied to said steering torque input means;

means for detecting a lateral dynamic condition of said vehicle; and

active reaction generating means for applying a second actuating torque to said steerable wheels so as to control a turning movement of said vehicle according to a signal supplied from said detecting means, said second actuating torque being determined according to a deviation of an actual lateral dynamic response of said vehicle from a reference lateral dynamic response that is computed for each given steering input by representing said vehicle with a first-order delay transfer function;

whereby an overall actuating torque applied to said steerable wheels comprises a sum of said first and second actuating torques provided by said powered steering control means and said active reaction generating means.

5,703,776

METHOD AND DEVICE FOR MEASURING SLOPE OF DRIVING ROAD

Gwang-Geong Soung, Seoul, Rep. of Korea, assignor to Hyundai Motor Company, Ltd., Seoul, Rep. of Korea

Filed Apr. 5, 1995, Ser. No. 417,016

Claims priority, application Rep. of Korea, Apr. 6, 1994, 947183

Int. Cl.⁶ G06G *7/70;* **G06F** *7/70*

U.S. Cl. 364—424.094 **15 Claims**

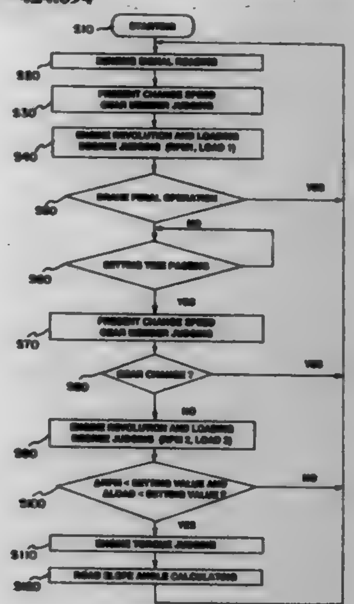

1. A device for measuring the slope of a road surface on which a vehicle travels, said device comprising:

a gear position sensing member for outputting a corresponding electrical signal after sensing a position of a transmission gear member;

an engine revolution sensing member for outputting a corresponding electrical signal after sensing a number of an engine revolution;

a loading degree sensing member for outputting a corresponding electrical signal after sensing a loading degree which is changed by a driving state of the vehicle;

a brake pedal operating state sensing member for sensing an operating state of a brake pedal, which is changed by an operating state of a brake pedal; and

an engine controlling member connected to said gear position sensing member, said engine revolution sensing member, said loading degree sensing member, and said brake pedal operating state sensing member, whereby the engine controlling member measures the slope of the road surface by using a calculated engine torque after the engine controlling member judges the position of the transmission gear member by said gear position sensing member, and if the transmission gear member does not change and if the brake pedal is not operated, the engine controlling member calculates an error set value of the engine revolution and loading degree by comparing sensed engine revolution and loading degree data with a predetermined set value of the engine revolution and leading degree, and the engine controlling member calculates an engine torque if said calculated error set value of the engine revolution and loading degree is less than said predetermined set value, wherein said calculated engine torque is used to measure the slope of the road surface on which the vehicle travels.

5,703,777

PARAMETRIC EMISSIONS MONITORING SYSTEM HAVING OPERATING CONDITION DEVIATION FEEDBACK

Thomas Robert Buchhop, Canton; Randall D'Alleva, St. Clair Shores; Ronald Keith Darnell, Ortonville; Jack Ryan Little, Metamora, and Curtis Thomas Pedersen, Fenton, all of Mich., assignors to ANR Pipeline Company, Detroit, Mich.

Filed Oct. 20, 1994, Ser. No. 326,716

Int. Cl.⁶ G06G *7/70;* **F02C** *9/00;* **F02B** *47/08*

U.S. Cl. 364—431.062 **29 Claims**

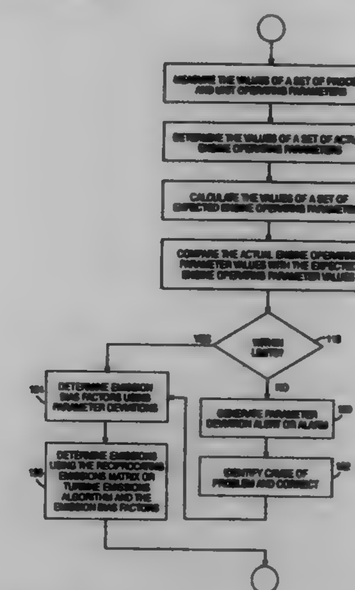

1. In an energy conversion system for converting hydrocarbon based fuel into thermal energy to be used in a process wherein the system has associated therewith an emissions matrix, a method of determining parameter values indicative of exhaust emissions produced by the combustion of the fuel by the energy conversion system, said method comprising the steps of:

(a) measuring a respective value for each parameter of a set of process and system parameters;

(b) determining a respective value for each parameter of a set of actual operating parameters using the process and system parameter values measured in step (a);

(c) calculating a respective value for each parameter of a set of expected operating parameters using the process and system parameter values measured in step (a) and predetermined tuned system operating data;

(d) comparing each one of the actual operating parameter values with a respective one of the expected operating parameter values generated in step (c) to determine a respective operating parameter deviation;

(e) determining a respective value for each parameter of a set of emission parameters indicative of exhaust emissions produced by the system as a function of the process and system parameter values, the emissions matrix, and the operating parameter deviations; and

(f) biasing the emission parameter values from the emissions matrix using a set of emission biasing parameters to determine updated values of the emission parameters.

5,703,778

TRAFFIC CONTROL METHOD FOR RELIEVING VEHICLE CONGESTION ON PARALLEL ROADS

Kazunori Takahashi, Hitachi; Nobuhiro Hamada, Hitachiota; Masao Takatoo, Hitachinaka; Tohru Nagai, Ibaraki-ken; Toshiko Suzaki, Hitachinaka, and Seuichi Furukawa, Kawasaki, all of Japan, assignors to Hitachi, Ltd., Tokyo, Japan

Continuation-in-part of Ser. No. 913,902, Jul. 16, 1992. This application Jun. 1, 1995, Ser. No. 457,500

Claims priority, application Japan, Jul. 19, 1991, 3-179539

Int. Cl.⁶ G08G *1/065;1/07*

U.S. Cl. 364—437 **36 Claims**

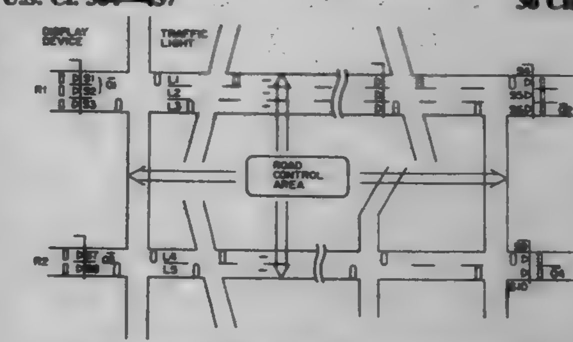

1. A method of controlling traffic of vehicles running on each of a plurality of parallel running roads, each of said roads being connected at points positioned at an interval of predetermined distance, and at least one of said plurality of roads having a plurality of lanes, said method comprising the steps of:

detecting traffic of vehicles running in two counter directions on each of said roads, at a position before at least one connecting point of each of said plurality of roads; and

changing a ratio of the number of lanes assigned to a particular direction of at least one of said plurality of roads, in accordance with said detected traffic of vehicles running in the two counter directions.

5,703,779

Patent Not Issued For This Number

5,703,780

NAVIGATION SYSTEM

Naoko Takanabe, and Ichiro Tanaka, both of Hyogo, Japan, assignors to Mitsubishi Denki Kabushiki Kaisha, Tokyo, Japan

Filed Jul. 18, 1995, Ser. No. 503,509

Claims priority, application Japan, Jan. 20, 1995, 7-007783

Int. Cl.⁶ G06F *165/00*

U.S. Cl. 364—449.3 **14 Claims**

1. A navigation system mounted on a vehicle, comprising:

operating means for inputting a departure position of the vehicle;

means for detecting a present position of the vehicle from an amount of change in bearing of the vehicle and a distance traveled by the vehicle from the departure position;

first storing means for storing map data about roads;

second storing means for reading information from the map data of a road existing ahead of the present position of the vehicle detected by said vehicle position detecting means, converting said information to a string of shape sign data, and storing the result therein as forward road data in the form of shape sign data;

means for detecting a change-in-road section in which a road orientation greatly varies, from the forward road data stored in said second storing means, by calculating curvatures at points on the road ahead from said forward road data to detect the

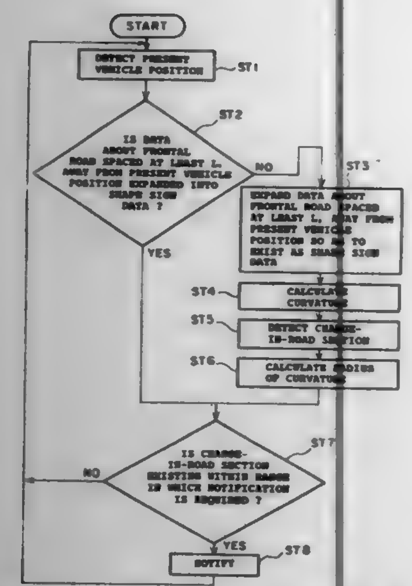

change-in-road section and judging whether the change-in-road section exists within a range in which a notification is required; and

notifying means for notifying the operator of the vehicle when the notification has been judged necessary by said change-in-road detecting means.

5,703,781

AUTOMATIC MARKET MAKING SYSTEM AND METHOD

Charles R. Martell, Dallas; Michael J. Cassidy, Richardson; Anita K. Ramsey, Garland; Zih-Fang Liu, Plano; Chou Ling Ting, Garland, and H. Anderson McKellar, Dallas, all of Tex., assignors to Gerger Garment Technology, Inc., Tolland, Conn.

Continuation of Ser. No. 184,974, Jan. 24, 1994, abandoned. This application Sep. 5, 1996, Ser. No. 712,993

Int. Cl.^{6} G06F *19/00*

U.S. Cl. 364—470.06 **16 Claims**

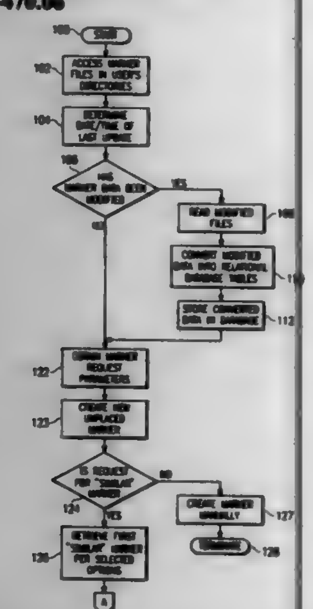

1. A system for automatically making markers, comprising:

a network of interconnected digital processors, each of said digital processors operable to store marker information in memory;

at least one of said digital processors operable to retrieve and process said marker information stored by each of the other said digital processors;

said at least one of said digital processors further operable to:

rank similar markers retrieved from said retrieved marker information according to predetermined marker making criteria;

select one of the ranked similar markers;

position and orient pieces in a new marker in accordance with the position and orientation of corresponding pieces in the selected similar marker;

correct the new marker to eliminate overlaps between the new pieces; and

compact the new marker using a Minkowski Sum algorithm to shorten the length.

5,703,782

METHOD AND SYSTEM FOR PRODUCING 3-D CARRED SIGNS USING AUTOMATIC TOOL PATH GENERATION AND COMPUTER-SIMULATION TECHNIQUES

David M. Dundorf, 388 Shelbourne Terr., Ridgewood, N.J. 07450

Continuation of Ser. No. 701,445, May 15, 1991, abandoned, which is a continuation of Ser. No. 78,832, Jul. 28, 1987, abandoned. This application Jul. 26, 1995, Ser. No. 507,153

Int. Cl.^{6} G06F *19/00;* **G05B** *19/02*

U.S. Cl. 364—474.24 **7 Claims**

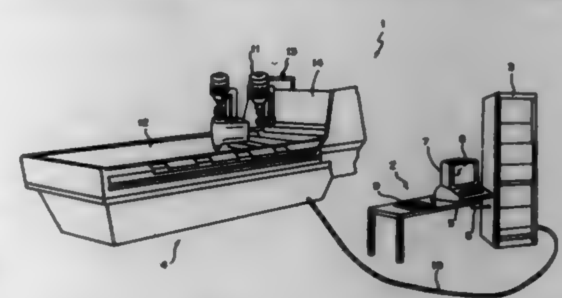

1. A method of producing a 3-D signage work in a signboard formed of constituting material, said method comprising the sequence of steps:

(a) on a computer-graphics modelling workstation, creating a 3-D computer-graphics model of a signboard of predetermined dimensions and a 3-D computer-graphics model of an axially rotating carving tool to be moved relative to said 3-D computer-graphics model of said signboard in order to produce a 3-D computer-graphics model of a 3-D signage work having 3-D surfaces to be formed in said signboard using said axially rotating carving tool associated with a computer-controlled carving machine capable of simultaneously moving said axially rotating carving tool along at least three coordinate axes referenceable to said signboard;

(b) automatically determining a tool path along which said axially rotating carving tool is to be moved relative to said signboard during sign carving operations carried out by said computer-controlled carving machine in order to form said 3-D signage work in said signboard;

(c) simulating the carving of said 3-D signage work in said signboard by generating on said computer-graphics modelling workstation, a 3-D computer-graphics model of the process of forming 3-D surfaces in said 3-D computer-graphics model of said signboard as said 3-D computer-graphics model of said axially rotating carving tool is moved relative to said 3-D computer-graphics model of said signboard along said automatically determined tool path;

(d) graphically displaying said 3-D computer-graphics model of said 3-D surfaces formed in said 3-D computer-graphics model of said signboard during step (c); and

(e) during said sign carving operations, removing constituting material of said signboard by moving said axially rotating carving tool relative to said signboard along said tool path under the control of said computer-controlled carving machine in order to form in said signboard, a 3-D carved-pattern corresponding to said 3-D graphical model of said signage work,

wherein said 3-D carved-pattern formed in said signboard has 3-D surfaces corresponding to said 3-D surfaces of said 3-D computer graphics model of said signage work.

5,703,783

APPARATUS FOR INTERCEPTING AND FORWARDING INCORRECTLY ADDRESSED POSTAL MAIL

Ronald L. Allen, Grand Prairie; Brenda J. Bishop-Jones; Michael J. Cykana, both of Arlington; Eddie K. Lui, Euless, and Stanley Wayne Sipe, Arlington, all of Tex., assignors to ElectroCom Automation, L.P., Arlington, Tex.

Continuation of Ser. No. 864,437, Apr. 6, 1992, Pat. No. 5,422,821. This application Jun. 7, 1995, Ser. No. 483,719

Int. Cl.^{6} G06F *17/60*

U.S. Cl. 364—478.01 **5 Claims**

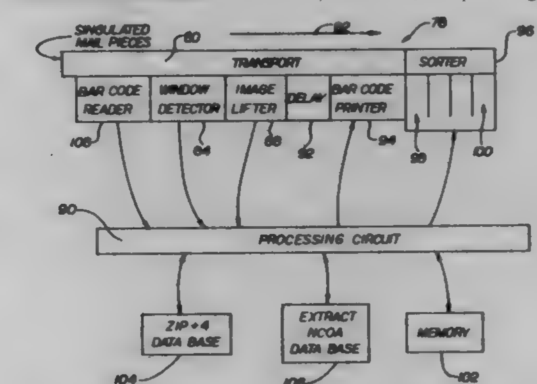

1. A mailpiece processing system for updating a change of address information list, comprising:

a line scanner for scanning a forwarding information form having address information including a former address, a forwarding address and an addressee name to capture forwarding information data in a computer memory representing address information for forwarding a mailpiece to a forwarding address, including the former address, the forwarding address and the addressee name;

a memory for storing a national change of address data base or an extract thereof containing address information including the former address, forwarding address and an addressee name for mailpieces to be forwarded to a forwarding address;

a comparator for comparing each of the items of address information for the captured forwarding information data from the forwarding information form with each of the items of address information of the national change of address information data base or an extract thereof to identify the absence of an item of address information of the forwarding information for the addressee captured from the forwarding information form and generating a forwarding signal when the presence of an item of address information of the forwarding information for the addressee cannot be identified on the national change of address data base or an extract thereof; and

a processing circuit responsive to the forwarding signal for adding the address information of the forwarding information for the addressee to the national change of address database or an extract thereof.

5,703,784

MACHINE VISION APPARATUS AND METHOD FOR SORTING OBJECTS

Thomas C. Pearson, Davis, Calif., assignor to The United States of America as represented by the Secretary of Agriculture, Washington, D.C.

Filed Oct. 30, 1995, Ser. No. 550,310

Int. Cl.^{6} G06F *19/00;* **B07C** *5/342*

U.S. Cl. 364—478.11 **14 Claims**

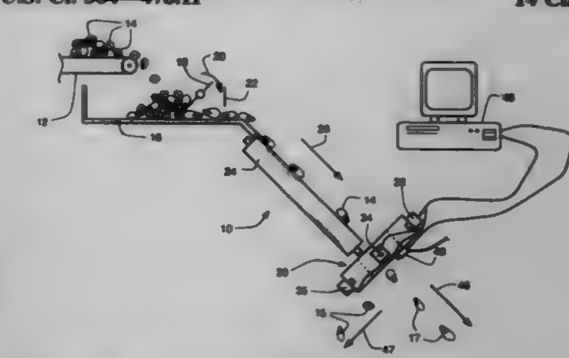

1. An object sorting method comprising steps of:

producing a video image of an object in which the video image comprises a series of pixels each having an intensity;

deriving signal gradients for a plurality of pixels in the video image;

defining a plurality of regions in the video image in which each region has a given plurality of pixels;

determining how many pixels have both a signal gradient that is less than a first signal gradient value and an intensity less than a first intensity value to produce a first parameter value;

determining how many regions exist wherein all the pixels in the region have both a signal gradient that is greater than a second signal gradient value and an intensity greater than a second intensity value to produce a second parameter value;

determining how many pixels have a signal gradient that is greater than a third signal gradient value and less than a fourth signal gradient value to produce a third parameter value; and

selecting a path along which to direct the object in response to the first, second, and third parameter values; and

directing the object along the selected path.

5,703,785

INVENTORY CONTROL APPARATUS AND METHOD OF USING SAME

Mark R. Bluemel, 4671 Bermuda Ave., San Diego, Calif. 92107; King W. Lim, P.O. Box 99775, San Diego, Calif. 92169, and Frederick Bluemel, 18 Williamsburg Dr., Fort Salonga, N.Y. 11768

Filed Aug. 19, 1994, Ser. No. 292,577

Int. Cl.^{6} G06F *17/00;* **G06G** *7/48*

U.S. Cl. 364—479.14 **1 Claim**

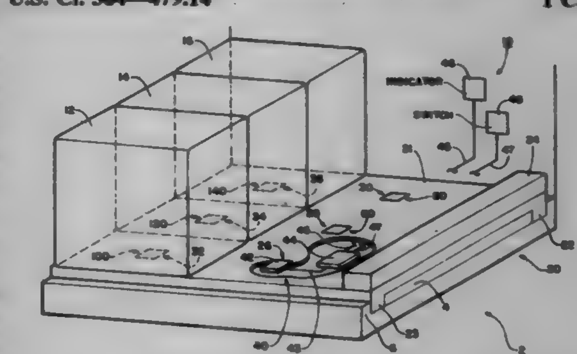

1. An inventory control apparatus for use in an establishment including a plurality of existing open shelves having a variety of merchandise displayed thereon to enable the establishment to monitor the removal of an individual item of merchandise from at

least one of the shelves without restricting customer access to the at least one shelf, each one of the shelves having an outer lip extending upwardly from a top surface, the inventory control apparatus comprising:

portable base means to position on top of the at least one shelf for receiving the merchandise item thereon to facilitate the monitoring of the merchandise item, wherein said portable base means is not fixed to the at least one shelf to enable said portable base means to be relocated and repositioned on another one of the plurality of shelves for monitoring other items of merchandise;

sensor means coupled to said portable base means for sensing the status of the merchandise item relative to said portable base means to generate a situated signal when the merchandise item is in the proximity of said sensor means, and to generate a removed signal when the merchandise item is not in the proximity of said sensor means, wherein the merchandise item is disposed on said portable base means to cooperate with said sensor means for generating said situated signal and said removed signal;

detection means connected to said sensor means for generating an indicating signal to identify the status of the merchandise item;

annunciator means connected to said detection means for indicating the status of the merchandise item relative to said sensor means to enable the establishment to monitor the presence or absence of the merchandise item on said portable base means;

said sensing means includes a photoresistor;

said annunciator means includes a light emitting diode;

said annunciator means includes a speaker;

wherein said sensor means and said detection means are connected to form a monitoring means for generating a trigger signal when the merchandise item is removed from the proximity of said sensor means, wherein said trigger signal is generated in response to said detection means generating said indicating signal;

said annunciator means includes a timer means for generating a switching signal of variable duration to control the period of time that said annunciator means is activated;

a switch means responsive to said switching signal to activate said annunciator means;

a plurality of said monitoring means, wherein each of said monitoring means is connected to said timer means by a common node, and wherein said timer means generates said switching signal each time one of said monitor means generates said trigger signal;

said timer means includes a control means to vary the duration of said switching signal;

said portable base means includes a planar member and a pair of spaced apart support members to support said planar member above the top surface of the at least one shelf, wherein one of said support members engages the outer lip of the at least one shelf to prevent the inventory control apparatus from sliding off of the top surface; and

a power source disposed on said portable base means and coupled to said monitoring means for providing electrical energy.

5,703,786
MEDICATION DISPENSING AND TIMING SYSTEM UTILIZING TIME REFERENCE MESSAGE

Gary W. Conkright, Naperville, Ill., assignor to Profile Systems, LLC, Merrillville, Ind.

Filed Aug. 14, 1995, Ser. No. 514,990

Int. Cl.⁶ G06F *19/00*

U.S. Cl. 364—479.14 **20 Claims**

1. A dispensing system for dispensing medication to a patent in accordance with a predetermined medication schedule, comprising:

central monitoring means for generating periodic time reference signals, at least a portion of said reference signals corresponding to the designated times of individual dosages of a predetermined patient medication schedule;

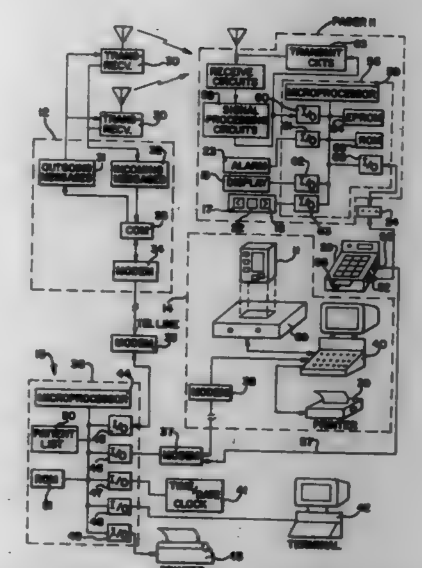

memory means for storing the medication schedule;

a receiver associated with said patient for receiving said periodic time reference signals;

a wireless communication network for conveying said time reference signals to said receiver; and

said memory means being responsive to said reference signals for providing a prompt to the patient to take medication in accordance with said medication schedule.

5,703,787
WAVE ANALYZING APPARATUS AND WAVE ANALYZING METHOD

Takefumi Namiki, Kawasaki, Japan, assignor to Fujitsu Limited, Kawasaki, Japan

Filed Feb. 26, 1996, Ser. No. 606,822

Claims priority, application Japan, Jun. 28, 1995, 7-162565

Int. Cl.⁶ G01S *7/36;* **G06F** *11/20;12/12*

U.S. Cl. 364—487 **16 Claims**

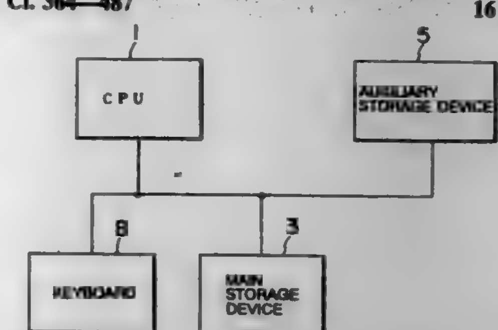

1. A wave analyzing apparatus for analyzing, when changing wave data of a specified discrete point within an analysis domain expressed by a plurality of discrete points, such a state that the changes thereof are propagated in the form of spatial and time variations of wave data of other discrete points, said apparatus comprising:

storage means for storing the wave data about each of the plurality of discrete points;

dividing/managing means for dividing the analysis domain into a plurality of blocks and managing these blocks;

determining means for determining whether or not magnitudes of the wave data about some pre-designated discrete points for determination that are contained in an interior of the block are all smaller than a predetermined value for every block managed by said dividing/managing means; and

analyzing means for treating, with respect to blocks in which the magnitudes of the wave data corresponding to the determination discrete points are determined to be smaller than the predetermined value by said determining means, the wave data about the respective discrete points within these blocks that have been stored in said storage means as wave data about the discrete points after the fixed time has elapsed, and for calculating, with respect to the blocks exclusive of the above-mentioned blocks, the wave data about the discrete points after a fixed time has elapsed on the basis of the wave date about the respective discrete points within these blocks the wave data being stored in said storage means.

5,703,788
CONFIGURATION MANAGEMENT AND AUTOMATED TEST SYSTEM ASIC DESIGN SOFTWARE

Darlene Shei, Milpitas, and Jiurong Cheng, Sunnyvale, both of Calif., assignors to LSI Logic Corporation, Milpitas, Calif.

Filed Jun. 7, 1995, Ser. No. 477,490

Int. Cl.⁶ G06F *17/50;19/00*

U.S. Cl. 364—488 **19 Claims**

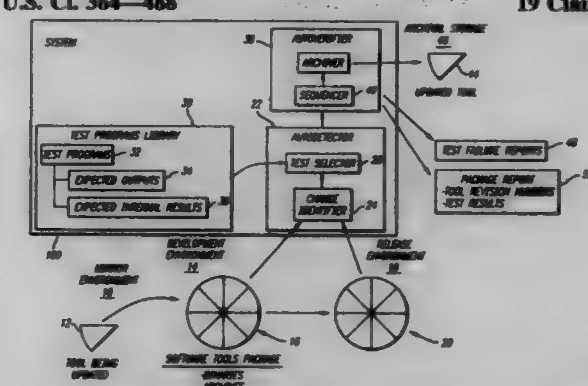

5. A system for automatically testing and verifying the operational reliability of a library of interdependent software tools, comprising:

change identifier means for automatically identifying any modification in the library of interdependent software tools; and

sequential tester means responsive to said change identifier means for automatically selecting and testing sequentially each interdependent software tool affected by the identified modification.

5,703,789
TEST READY COMPILER FOR DESIGN FOR TEST SYNTHESIS

James Beausang, Mountain View, Calif., and Robert Walker, Boulder, Colo., assignors to Synopsys, Inc., Mountain View, Calif.

Filed Dec. 29, 1995, Ser. No. 581,187

Int. Cl.⁶ G06F *17/50*

U.S. Cl. 364—489 **36 Claims**

1. In a computer implemented synthesis system, a method of generating a netlist comprising the computer implemented steps of:

receiving an HDL specification representing a design to be realized in physical form and storing said HDL specification in a computer memory unit;

receiving constraints applicable to said design;

compiling said HDL specification with a compiler to produce a netlist description of said design wherein said netlist comprises functional logic blocks and connections there between including sequential cells and combinational logic, said step of compiling further comprising the steps of:

(i) replacing non-scan sequential cells specified in or inferred from said HDL specification with scannable sequential cells specially adapted to apply test vectors to combinational logic of said design; and

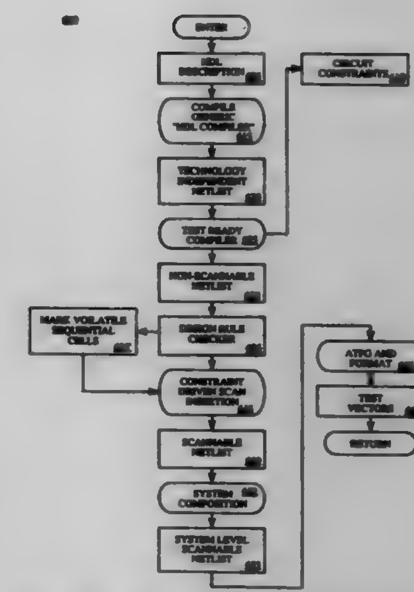

(ii) installing a loopback connection between an output and an input of each scannable sequential cell;

storing said netlist description into said computer memory unit, said netlist description including said scannable sequential cells and loopback connections associated with said scannable sequential cells.

5,703,790
SERIES CONNECTION OF MULTIPLE DIGITAL DEVICES TO A SINGLE POWER SOURCE

William D. Farwell, Thousand Oaks, Calif., assignor to Hughes Electronics, Los Angeles, Calif.

Filed Feb. 27, 1996, Ser. No. 607,543

Int. Cl.⁶ G05F *1/10*

U.S. Cl. 364—492 **6 Claims**

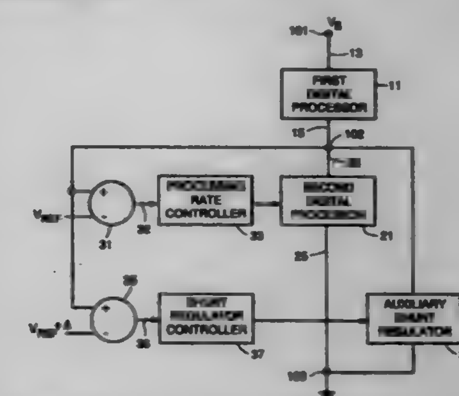

1. A digital processor system connected between a first power supply node and a second power supply node, comprising:

a first processor having a first supply terminal and a second supply terminal, said first supply terminal of said first processor being connected to the first supply node;

a second processor having a first supply terminal and a second supply terminal, said first supply terminal of said second processor being connected to said second supply terminal of said first processor at an intermediate supply node and said second supply terminal of said second processor being connected to the second supply node, such that said first processor and said second processor are connected in series between the first supply node and the second supply node; and

processing rate control means responsive to a predetermined reference voltage and a voltage at said intermediate supply node for controlling a processing rate of said second proces-

sor to maintain said voltage at said intermediate supply node close to said predetermined reference voltage.

5,703,791
ELECTRIC POWER SYSTEM STABILIZATION CONTROL APPARATUS AND METHOD THEREOF
Masahiko Amano, Hitachioota; Masahiro Watanabe, Hitachi; Hiroo Konishi, Hitachinaka; Shinya Tanifuji, Hitachi, and Tomoharu Nakamura, Hitachioota, all of Japan, assignors to Hitachi, Ltd., Tokyo, Japan
Filed Feb. 13, 1995, Ser. No. 387,097
Claims priority, application Japan, Feb. 17, 1994, 6-020114
Int. Cl.^{6} H02H *7/06*
U.S. Cl. 364—492 **14 Claims**

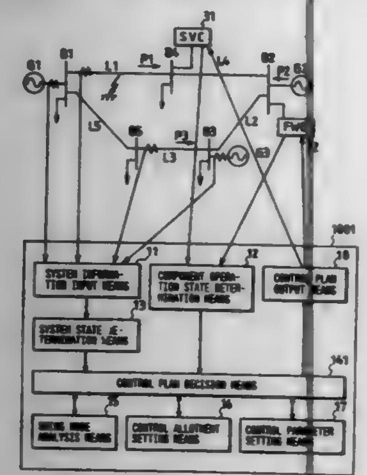

1. A power system stabilization control apparatus comprising:
system information input means for taking in system information from a power system in which a plurality of system stabilizing components are installed;
component operation state determination means for determining component operation states of said plurality of system stabilizing components;
system state determination means for determining system states on the basis of said system information;
control parameter adjusting means for adjusting control parameters for said plurality of system stabilizing components on the basis of said system states and said component operation states;
control parameter output means for outputting said adjusted control parameters to said plurality of system stabilizing components;
swing mode analysis means for determining swing modes generated by disturbances occurring in said power system, based on said taken-in system information; and
wherein said control parameter adjusting means adjusts said control parameters of said plurality of system stabilizing components so as to suppress said generated swing modes.

5,703,792
THREE DIMENSIONAL MEASUREMENT OF MOLECULAR DIVERSITY
David Chapman, San Francisco, Calif., assignor to Arris Pharmaceutical Corporation, South San Francisco, Calif.
Continuation-in-part of Ser. No. 382,990, Oct. 28, 1994, Pat. No. 5,526,281, which is a continuation of Ser. No. 66,389, May 21, 1993, abandoned. This application Dec. 13, 1994, Ser. No. 357,580
Int. Cl.^{6} G06F *17/50*
U.S. Cl. 364—496 **14 Claims**

1. A system for selecting molecules or molecular parts for screening, comprising

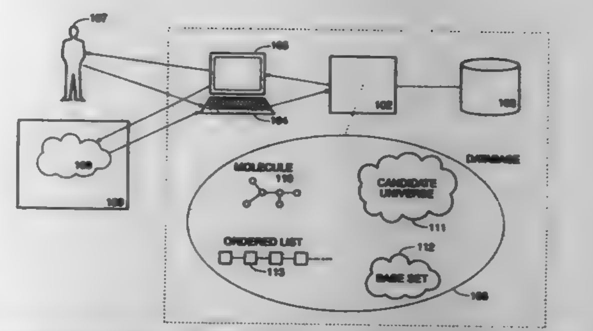

a processor having a memory, said memory comprising a candidate universe of molecules and a base set of molecules;
means for directing said processor to define, for each molecule in said candidate universe, a measure of added diversity relative to said base set; and
means for directing said processor to select a molecule from said candidate universe for addition to said base set, responsive to said measure of added diversity.

5,703,793
VIDEO DECOMPRESSION
Adrian P. Wise, and Nicholas Birch, both of Bristol, United Kingdom, assignors to Discovision Associates, Irvine, Calif.
Division of Ser. No. 473,813, Jun. 7, 1995. This application Jul. 7, 1995, Ser. No. 481,785
Claims priority, application United Kingdom, Jul. 29, 1994, 9415413; Jul. 6, 1995, 9511569
Int. Cl.^{6} G06F *9/00;13/00*
U.S. Cl. 364—514 R **11 Claims**

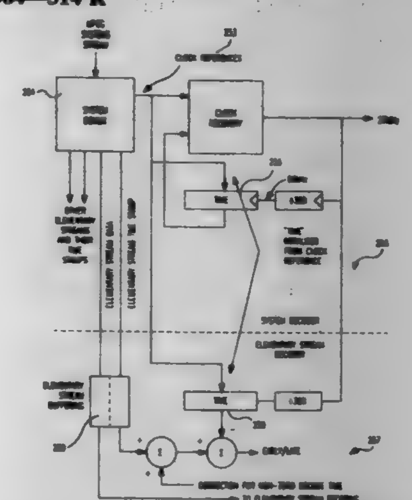

1. An apparatus for synchronizing a system decoder and a video decoder, comprising:
a system decoder;
a time stamp for determining display time;
a clock reference for initializing system time in said system decoder;
a first time counter in communication with said clock reference for keeping system time in said system decoder; and
a second time counter initialized by said clock reference in said video decoder synchronized with said first time counter, for keeping a local copy of system time and for determining the display timing error between said local copy of system time and said system time by comparing the time stamp to said second time counter.

5,703,794
METHOD AND SYSTEM FOR MIXING AUDIO STREAMS IN A COMPUTING SYSTEM
Robert M. Heddle, Kirkland; Frank Dominic Yerrace, Bellevue, and Geoff Dahl, Kirkland, all of Wash., assignors to Microsoft Corporation, Redmond, Wash.
Filed Jun. 20, 1995, Ser. No. 492,709
Int. Cl.^{6} G06K *15/00*
U.S. Cl. 364—514 R **24 Claims**

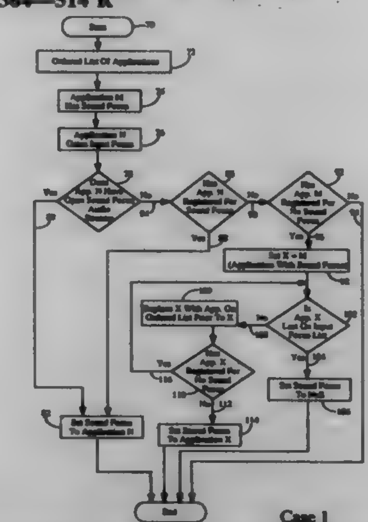

Case 1

1. A method for generating an audio output signal from one or more audio streams produced by one or more audio sources operating on a general purpose computer system in which each audio source can selectively have input focus, comprising the steps:
a. for each audio source, registering zero or more audio streams as sound focus audio streams;
b. determining which of the audio sources has sound focus based on the input focus and on the registration the audio streams of the audio sources as sound focus audio streams;
c. selecting the sound focus audio streams from the audio source that has the sound focus;
d. generating the audio output signal by mixing the selected sound focus audio streams of the audio source having the sound focus; and
e. converting the audio output signal to an audible sound.

5,703,795
APPARATUS AND METHODS FOR ACCESSING INFORMATION RELATING TO RADIO AND TELEVISION PROGRAMS
Roy J. Mankovitz, 18057 Medley Dr., Encino, Calif. 91006
Continuation-in-part of Ser. No. 344,333, Nov. 22, 1994, abandoned, which is a continuation-in-part of Ser. No. 227,079, Apr. 13, 1994, abandoned, which is a continuation-in-part of Ser. No. 901,735, Jun. 22, 1992, abandoned. This application Jun. 7, 1995, Ser. No. 486,769
Int. Cl.^{6} G08C *17/00*
U.S. Cl. 364—514 R **149 Claims**

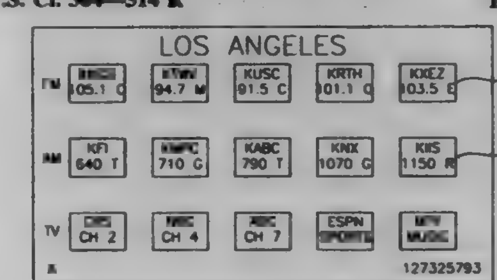

1. A method for providing information to a user from an information depository, the method comprising the steps of:
reproducing in the vicinity of each of a plurality of users, programs from one of a plurality of broadcast stations;
recording upon command by a user, an identification of a station and a time of a program on the station for which supplemental information is desired by the user;
entering the recorded station identification and time into one of a plurality of information exchange terminals;
coupling the information exchange terminal to the information depository to transmit information therebetween; and
identifying a correspondence between the entered station identification and time and a program in a station log to obtain the desired supplemental information; and recording the number of times a first program in the station log is identified as corresponding to entered station identifications and times.

5,703,796
DRIVELINE ALIGNMENT APPARATUS AND METHOD
Mohammad A. Moradi, W. Bloomfield; Michael D. Rossman, Canton; Larry LaBell, Grosse Ile, and Bonita Holz, Dearborn, all of Mich., assignors to Ford Global Technologies, Inc., Dearborn, Mich.
Filed Jul. 11, 1996, Ser. No. 678,126
Int. Cl.^{6} B60K *17/00*
U.S. Cl. 364—563 **13 Claims**

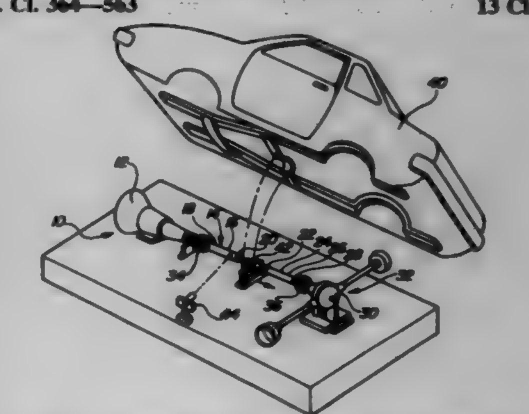

1. A method for aligning a driveline in a motor vehicle having a body, comprising the steps of:
and supporting a transmission and a rear axle with the body of the motor vehicle;
supporting a driveshaft at a first end with the transmission and supporting the driveshaft at a second end with the rear axle;
positioning a driveshaft center bearing to the body of the motor vehicle and further supporting the driveshaft with the center bearing;
measuring the position of the driveline before the center bearing is secured to the body; and
calculating a shim thickness to install between the center bearing and the body.

5,703,797
METHOD AND APPARATUS FOR TESTING ACOUSTICAL DEVICES, INCLUDING HEARING AIDS AND THE LIKE
Timothy M. Russell, Tigard, Oreg., assignor to Frye Electronics, Inc., Tigard, Oreg.
Filed Oct. 13, 1994, Ser. No. 411,305
Int. Cl.^{6} G06F *17/00*
U.S. Cl. 364—576 **10 Claims**

1. A method for determining the transfer function of a signal processing device in the presence of signal reflections and extrinsic noise, said device having signal input and output, said method including:
i. a computer:
A. for controlling said method; and
B. programmed according to a control program incorporating said method;

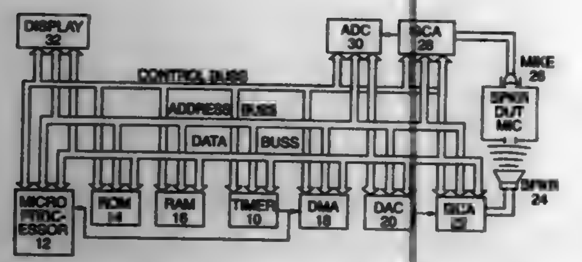

ii. introducing into said input a pure-tone test signal, from a signal generator, of first frequency fc;

iii. obtaining, by said computer using transform methods, mathematical representations of:

A. said test signal; and

B. amplitude and phase information of said test signal from said output;

iii. performing, by said computer, mathematical comparisons of:

A. said test signal; and

B. said signal output,

and giving said transfer function as output.

SAID METHOD COMPRISING:

a. introducing into said first frequency fc, under control of said computer, a variation therein of −x% fc and +x% fc, said variation being at a second frequency fw which is less than said fc;

b. varying said transform, by said computer, in synchronism with said variation in said first frequency so that said mathematical comparison reflects said transfer function of said device, at said first frequency, including said variation thereof at said second frequency.

5,703,798
SWITCH LEVEL SIMULATION EMPLOYING DYNAMIC SHORT-CIRCUIT RATIO
Sanjay Dhar, Lake Oswego, Oreg., assignor to Mentor Graphics Corporation, Wilsonville, Oreg.
Filed Apr. 25, 1995, Ser. No. 428,725
Int. Cl.^{6} G06F *9/455*
U.S. Cl. 364—578 **24 Claims**

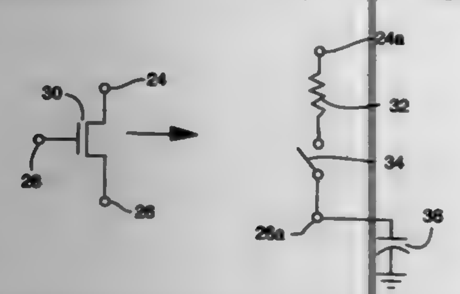

1. In a method of electronic circuit simulation wherein a plurality of transistors is modelled as a plurality of resistive switches, an improvement for estimating a transient current between power and ground with at least two of the transistors switching including modeling the transient current as a function of a dynamic short-circuit ratio defined as a ratio of a first resistance in a first circuit path switching OFF to a second resistance in a second circuit path switching ON.

5,703,799
LOSSLESS TRANSFORM CODING SYSTEM FOR DIGITAL SIGNALS
Mutsumi Ohta, Tokyo, Japan, assignor to NEC Corporation, Tokyo, Japan
Filed Jun. 17, 1996, Ser. No. 668,046
Claims priority, application Japan, Jun. 16, 1995, 7-174021
Int. Cl.^{6} G06F *17/14*
U.S. Cl. 364—725 **3 Claims**

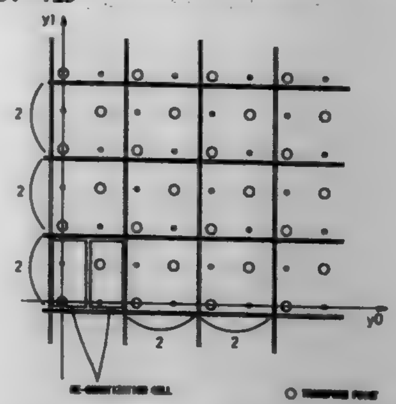

1. A transform coding system for digital signals which performs a four-element discrete cosine transform, comprising:

means for approximating the four-element discrete cosine transform with an integer linear transform represented by a matrix of

$$\begin{pmatrix} 1 & 1 & 1 & 1 \\ 5 & 2 & -2 & -5 \\ 1 & -1 & -1 & 1 \\ 2 & -5 & 5 & -2 \end{pmatrix}$$

and

means for performing the four-element discrete cosine transform using the matrix.

5,703,800
SIGNAL PROCESSOR
Kazuki Ninomiya; Keizo Sumida; Jiro Miyake, and Tamotsu Nishiyama, all of Osaka, Japan, assignors to Matsushita Electric Industrial Co., Ltd., Osaka, Japan
Filed Oct. 19, 1995, Ser. No. 545,204
Claims priority, application Japan, Oct. 21, 1994, 6-256994
Int. Cl.^{6} G06F *7/38*
U.S. Cl. 364—736 **20 Claims**

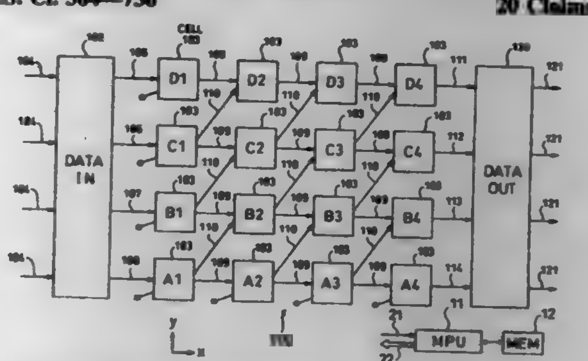

1. A signal processor comprising:

an arithmetic unit for performing arithmetic operations on data;

a first interface for receiving external data signals and for transmitting data corresponding to said received signals to said arithmetic unit; and

a second interface for receiving data processed by said arithmetic unit and for providing data signals corresponding to said received data;

said arithmetic unit including an array of a plurality of concurrently operable arithmetic cells arranged in columns and rows wherein each of said arithmetic cells is specified by a denotation of E[x,y] where x is a column number subscript satisfying $1 \leqq x \leqq M$ and y is a row number subscript satisfying $x \leqq y \leqq M$, M being a integer such that $M \geqq 2$, wherein:

an arithmetic cell, specified by E[1,y] where $1 \leqq y \leqq M$, receives data from said first interface;

an arithmetic cell, specified by E[x,y] where $2 \leqq x \leqq M$ and $x \leqq y \leqq M$, receives data directly from an E[x−1,y] arithmetic cell as well as directly from an E[x−1,y−1] arithmetic cell; and

an E[M,M] arithmetic cell provides data to said second interface.

5,703,801
LOGARITHM/INVERSE-LOGARITHM CONVERTER UTILIZING SECOND-ORDER TERM AND METHOD OF USING SAME
ShaoWei Pan, Schaumburg, and Shay-Ping Thomas Wang, Long Grove, both of Ill., assignors to Motorola, Inc., Schaumburg, Ill.
Filed Jan. 31, 1995, Ser. No. 382,467
Int. Cl.^{6} G06F *7/00;15/00;* H03M *7/50*
U.S. Cl. 364—748.5 **30 Claims**

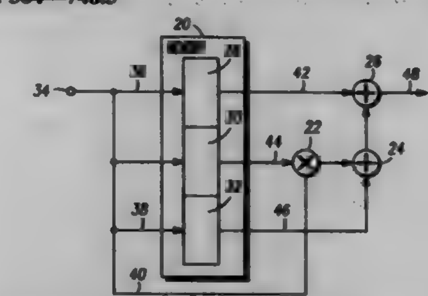

1. A logarithm converter, which comprises:

a memory for storing a plurality of parameters and a plurality of second-order terms, wherein the parameters are calculated using a least squares method to estimate a logarithmic function over a domain of input values, the memory providing as output ones of the parameters and a second-order term which correspond to an input value; and

arithmetic means, operatively coupled to the memory, for generating a log value by performing arithmetic operations on the input value, the ones of the parameters, and the second-order term.

5,703,802
METHOD AND APPARATUS FOR AUTOMATICALLY DESIGNING LOGIC CIRCUIT, AND MULTIPLIER
Shintaro Tsubata, and Tamotsu Nishiyama, both of Osaka, Japan, assignors to Matsushita Electric Industrial Co., Ltd., Osaka, Japan
Division of Ser. No. 174,450, Dec. 28, 1993, Pat. No. 5,530,664. This application Mar. 21, 1996, Ser. No. 620,046
Claims priority, application Japan, Dec. 28, 1992, 4-348269
Int. Cl.^{6} G06F *7/52;15/00*
U.S. Cl. 364—760 **34 Claims**

1. A method of automatically designing a logic circuit for generating a multiplier M which receives an n-bit number X and an m-bit constant A as its inputs and outputs their product P, comprising the steps of:

(a) if an integer K is $0<K<m$, generating a multiplier M1 which receives A1, composed of the low-order K bits of A, and X as its inputs, and outputs the product P1 of A1 and X;

(b) generating a multiplier M2 which receives A2, composed of the high-order (m−K) bits of A, and X as its inputs, and outputs the product P2 of A2 and X;

(c) generating a circuit which receives P1 and P2 as its inputs, and outputs the sum of P1 and the product of P2 and 2^K, wherein steps (a) to (c) are executed to generate said multiplier M; and

(d) determining the value of said integer K, based on the number L1 of the bits having the value of 1 in said constant A1 and on the number L2 of the bits having the value of 1 in said constant A2.

5,703,803
DYNAMICALLY CONTROLLED, CROSS-STACKED CAM CELL
Victor Shadan, Santa Clara, and Anurag Nigam, Mountain View, both of Calif., assignors to Intel Corporation, Santa Clara, Calif.
Filed Apr. 29, 1996, Ser. No. 639,556
Int. Cl.^{6} G11C *15/00*
U.S. Cl. 365—49 **5 Claims**

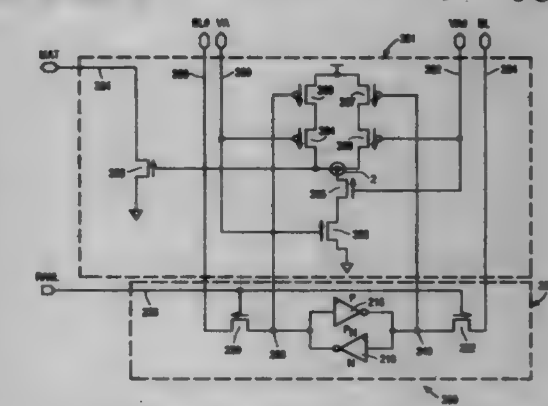

1. An apparatus that stores a bit in a content addressable memory, comprising:

a storage cell comprising:

a second node that stores an inverse of an address bit;

a third node that stores the address bit;

a read/write input that enables the address bit and the inverse of the address bit to be stored in the storage cell:

a comparison circuit coupled to the storage cell through the second and third nodes, comprising:

a first transistor of a first type having a source coupled to a source voltage node and a gate coupled to the second node;

a second transistor of the first type having a source coupled to a drain of the first transistor, a gate coupled to a first input that carries a virtual address bit, and a drain coupled to a first node;

a third transistor of the first type having a source coupled to the source voltage node and a gate coupled to the third node;

a fourth transistor of the first type having a source coupled to a drain of the third transistor, a gate coupled to a second input that carries an inverse of the virtual address bit, and a drain coupled to the first node;

a match indication line coupled to the first node that indicates a miss when values on the first and second inputs do not match values stored in the storage cell.

5,703,804
SEMICONDUCTOR MEMORY DEVICE
Hidekazu Takata, Nara-ken, Japan; Thomas Mnich, Woodland Park, Colo., and David Novosel, New Wilmington, Pa., assignors to Sharp Kabushiki K.K., Osaka, Japan
Filed Sep. 26, 1996, Ser. No. 723,963
Int. Cl.[6] G11C *11/22*
U.S. Cl. 365—145 **5 Claims**

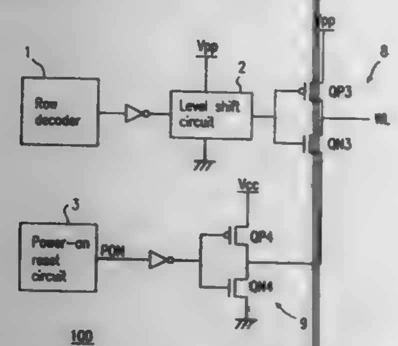

1. A semiconductor memory device, comprising:
a plurality of bit lines disposed on substrate;
a plurality of word lines and a plurality of data lines disposed on the substrate in a direction crossing with the bit lines;
a plurality of memory cells disposed in a matrix at portions corresponding to respective crossing points of the bit lines and the word lines, each of the plurality of memory cells having at least one switching transistor and at least one ferroelectric capacitor including a ferroelectric film as an insulating film to form a non-volatile ferroelectric memory strong information by a polarization direction of the ferroelectric film;
a substrate voltage generating circuit which supplies a negative substrate voltage to the substrate; and
a power-on reset circuit which applies output which is a predetermined positive voltage selectively to at least one of the plurality of the word lines during a time period from power-on until the substrate voltage is stabilized.

5,703,805
METHOD FOR DETECTING INFORMATION STORED IN A MRAM CELL HAVING TWO MAGNETIC LAYERS IN DIFFERENT THICKNESSES
Saied N. Tehrani, Tempe; Eugene Chen, Gilbert; Mark Durlam, and Xiaodong T. Zhu, both of Chandler, all of Ariz., assignors to Motorola, Schaumburg, Ill.
Filed May 8, 1996, Ser. No. 646,897
Int. Cl.[6] G11C *11/15*
U.S. Cl. 365—173 **25 Claims**
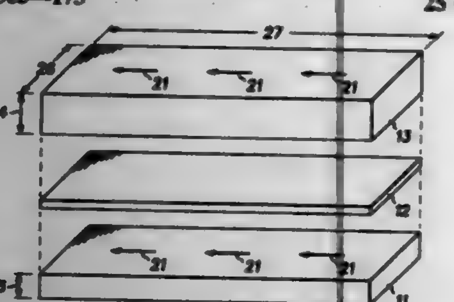
1. In a magnetic random access memory (MRAM) cell having two switchable magnetic layers having different magnetic switching thresholds separated by a conductor layer, a method for detecting one of a first state, a second state, a third state and a fourth state stored in the MRAM cell comprising the steps of:
applying a first magnetic field to the MRAM cell;
sensing one of the first state and the second state in the MRAM cell in response to a change of a resistance due to the first magnetic field;
applying a second different magnetic field to the MRAM cell; and
sensing one of the third state and the fourth state in the MRAM cell in response to a change of a resistance due to the second magnetic field.

5,703,806
GRAPHICS CONTROLLER INTEGRATED CIRCUIT WITHOUT MEMORY INTERFACE
Deepraj S. Puar, Sunnyvale, and Ravi Ranganathan, Cupertino, both of Calif., assignors to NeoMagic Corporation, Santa Clara, Calif.
Continuation of Ser. No. 262,412, Jun. 20, 1994, abandoned. This application Aug. 16, 1996, Ser. No. 699,090
Int. Cl.[6] G11C *13/00*
U.S. Cl. 365—181 **29 Claims**

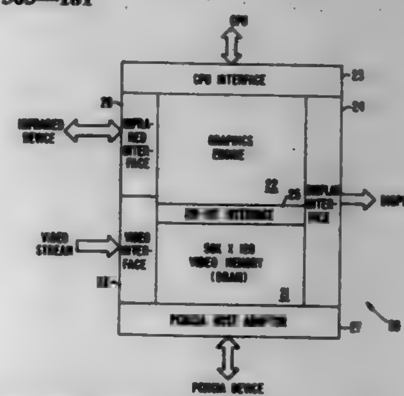

1. An integrated circuit comprising
a logic portion having at least 30K logic gates, said logic gates having first dopant-type and second dopant-type MOS transistors, said first dopant-type MOS transistors having sources connected to a first voltage supply line, said second dopant-type MOS transistors having sources connected to a second voltage supply line, and said second dopant-type MOS transistors placed in a substrate region connected to third voltage supply line, said third voltage supply different than said second voltage supply; and
a memory portion interconnected with said logic portion, said memory portion having a capacity of at least 2 megabits.

5,703,807
EEPROM WITH ENHANCED RELIABILITY BY SELECTABLE V_{PP} FOR WRITE AND ERASE
Michael C. Smayling, Missouri City, Tex.; Giovanni Santin, Santa Rufina, and Giulio Marotta, Contigliano, both of Italy, assignors to Texas Instruments Incorporated, Dallas, Tex.
Filed Jul. 19, 1996, Ser. No. 684,375
Int. Cl.[6] G11C *11/34;7/00*
U.S. Cl. 365—185.03 **5 Claims**

1. A voltage regulator for generating an erasure voltage and a programming voltage for an EEPROM array having a plurality of cells, the cells of the EEPROM array being capable of erasure and programming, comprising:
generating means for generating a signal having an increasing voltage; and
means, coupled to said generating means, for monitoring said signal and for terminating the increase in voltage of said signal when said signal reaches a first selected maximum level in an erase operation of at least one cell of said

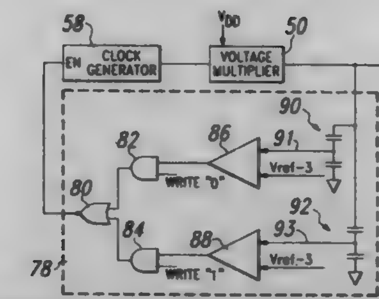

EEPROM array, and for terminating the increase in voltage of said signal when said signal reaches a second selected maximum level in a program operation of at least one cell of said EEPROM array.

5,703,808
NON-VOLATILE MEMORY CELL AND METHOD OF PROGRAMMING
Jitendra J. Makwana, Chandler; Darryl F. Monteilh, Mesa, and Effiong A. Omon, Higley, all of Ariz., assignors to Motorola, Inc., Schaumburg, Ill.
Filed Feb. 21, 1996, Ser. No. 604,321
Int. Cl.[6] G11C *11/34*
U.S. Cl. 365—185.27 **31 Claims**

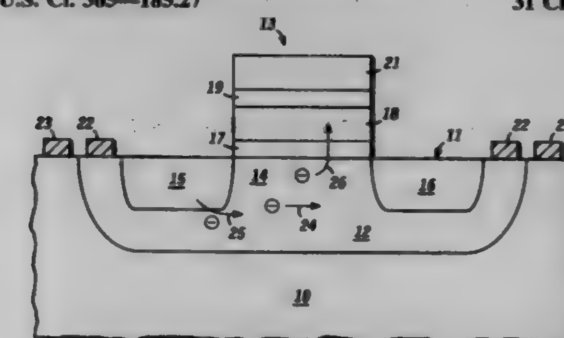

1. A method for programming a non-volatile memory cell, the method comprising the steps of:
providing a non-volatile memory cell, the non-volatile memory cell comprising:
a) a semiconductor substrate of a first conductivity, the semiconductor substrate having a well region of a second conductivity;
b) a contact to the well region to provide a voltage potential between the well region and the semiconductor substrate; and
c) wherein the non-volatile memory cell has a floating gate region, a control gate region, and a dielectric layer overlying the well region, and the non-volatile memory cell having a source region, a drain region, and a channel region in the well region, the channel region being between the source region and the drain region;
placing a first voltage potential on the drain region of the non-volatile memory cell;
placing a second voltage potential on the source region of the non-volatile memory cell, so that the first voltage potential and the second voltage potential provide a current passing through the channel region of the non-volatile memory cell;
placing a third voltage potential on the contact to the well region to provide a flow of electrons into the well region from the source region; and
placing a fourth voltage potential on the control gate region of the non-volatile memory cell, the fourth voltage potential directing electrons from the channel region into the floating gate region by hot carrier injection.

5,703,809
OVERCHARGE/DISCHARGE VOLTAGE REGULATOR FOR EPROM MEMORY ARRAY
Richard Hull, Chandler, and Randy L. Yach, Phoenix, both of Ariz., assignors to Microchip Technology Incorporated, Chandler, Ariz.
Filed Oct. 1, 1996, Ser. No. 723,926
Int. Cl.[6] G11C *16/00*
U.S. Cl. 365—185.25 **9 Claims**

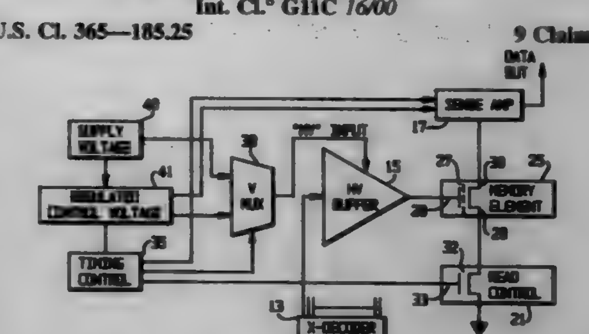

8. A high speed erasable programmable read-only memory (EPROM) having a memory array in which data is stored by programming memory elements at intersections of rows and columns of the array, said EPROM comprising:
means for capacitively overcharging a row of the array containing a memory element to be read to a voltage corresponding to substantially the maximum level of the supply voltage of the EPROM, possibly exceeding the programmed threshold voltage of said memory element to be read,
means for rapidly discharging said row voltage to a predetermined level below said maximum level of the supply voltage, and
means for thereupon reading said memory element by passing a current therethrough.

5,703,810
DRAM FOR TEXTURE MAPPING
Michael Nagy, San Ramon, Calif., assignor to Silicon Graphics, Inc., Mountain View, Calif.
Filed Dec. 15, 1995, Ser. No. 573,254
Int. Cl.[6] G11C *7/00*
U.S. Cl. 365—189.05 **13 Claims**

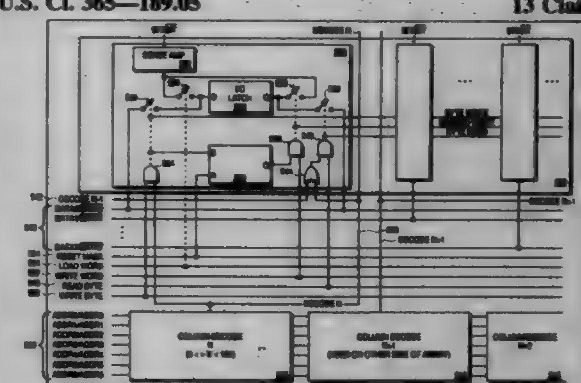

1. A dynamic random access memory (DRAM) comprising:
a plurality of memory cells organized into a memory array;
a plurality of sense amplifiers, each one of the sense amplifiers coupled to a memory cell of the plurality of memory cells such that data transferred to the sense amplifiers is written to the coupled memory cells during a write operation;
a latch/mask device comprising a plurality of latches to store data bits arranged in bytes and mask bits, one mask bit for byte of data, each one of the plurality of latches coupled to one sense amplifier of the plurality of sense amplifiers, the state of each mask bit controlling whether the corresponding byte is to be transferred to the array such that at least one selected byte of the bytes of latches is transferred to the sense amplifiers for transfer to coupled memory cells without affect-

ing the state of memory cells coupled to sense amplifiers coupled to non-selected bytes of the bytes of latches.

5,703,811
DATA OUTPUT BUFFER CIRCUIT OF SEMICONDUCTOR MEMORY DEVICE
Seung-Moon Yoo, and Jei-Hwon Yoo, both of Suwon, Rep. of Korea, assignors to Samsung Electronocs Co., Ltd., Suwon, Rep. of Korea
Filed Dec. 29, 1995, Ser. No. 580,546
Claims priority, application Rep. of Korea, Dec. 29, 1994, 1994/38507
Int. Cl.[6] G11C *13/00*
U.S. Cl. 365—189.05 **23 Claims**

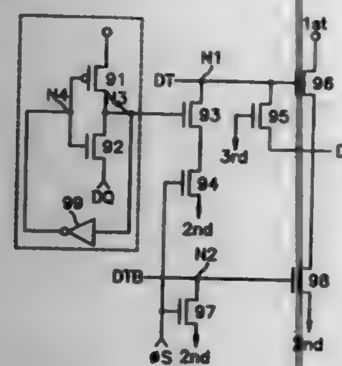

1. A data output buffer circuit of a semiconductor memory device which shares data input/output lines with other semiconductor memory devices, said circuit comprising:
a first input node which receives an output data signal;
a second input node which receives an inverted output data signal;
an output node for outputting a buffer output data signal having an output voltage, said buffer output data signal derived from said output data signal and said inverted output data signal;
a pull-up circuit connected between a first voltage and said output node, said pull-up circuit being controlled by said output data signal;
a pull-down circuit connected between said output node and a second voltage, said pull-down circuit being controlled by said inverted output data signal;
a voltage detection circuit connected between said first voltage and said output node, said voltage detection circuit inputting said buffer output data signal, detecting an output voltage level of said output voltage, and producing a detected voltage signal; and
a switch circuit connected between said first input node and said second voltage, said switch circuit including a switch input which receives said detected voltage signal.

5,703,812
MULTI-BIT DATA OUTPUT BUFFER FOR SEMICONDUCTOR MEMORY DEVICE
Myung Sun Ryu, Kyoungki-do, Rep. of Korea, assignor to Hyundai Electronics Industries Co., Ltd., Ichon-kun, Rep. of Korea
Filed Jul. 1, 1996, Ser. No. 674,160
Claims priority, application Rep. of Korea, Jun. 30, 1995, 95-18855
Int. Cl.[6] G11C *7/00*
U.S. Cl. 365—189.05 **4 Claims**

1. A multi-bit data output buffer for a semiconductor memory device, the buffer comprising:
data input means for inputting at least two bits of data whose logic values are independent of each other;

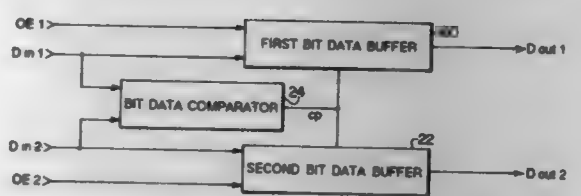

at least two bit data buffering means for buffering respective ones of the at least two bits of data from said data input means; and
bit data comparison means for comparing the logic values of the at least two bits of data from the data input means to produce a comparison signal that represents a comparison of the logic values of the at least two bits, and for controlling amounts of current flowing to said at least two bit data buffering means based on the comparison signal.

5,703,813
DRAM HAVING MULTIPLE COLUMN ADDRESS STROBE OPERATION
Troy A. Manning; Todd Merritt, and Brett Williams, all of Boise, Id., assignors to Micron Technology, Inc., Boise, Id.
Continuation of Ser. No. 565,420, Nov. 30, 1995, Pat. No. 5,604,714. This application Nov. 14, 1996, Ser. No. 749,802
Int. Cl.[6] G11C *7/00;8/00*
U.S. Cl. 365—189.05 **12 Claims**

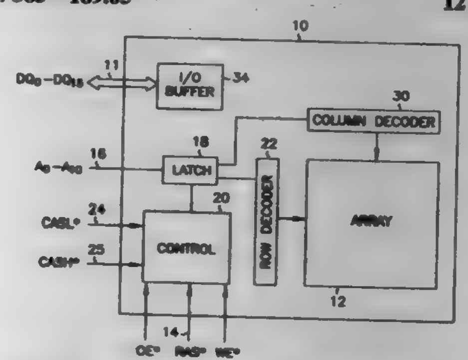

1. A dynamic random access memory (DRAM) comprising:
an array of memory cells arranged in rows and columns;
first and second column address strobe inputs;
a plurality of data line inputs and outputs; and
control circuitry for storing in the array one block of data, of a predetermined length, received on the plurality of communication line inputs in response to a signal provided on the first column address strobe input, and for storing in the array one block of data received on the plurality of communication line inputs in response to a signal provided on the second column address strobe input, the control circuitry further for outputting two blocks of data in response to a signal received on either the first or second column address strobe input.

5,703,814
SEMICONDUCTOR MEMORY DEVICE HAVING DUAL BOOSTING CIRCUITS TO REDUCE ENERGY REQUIRED TO SUPPLY BOOSTING VOLTAGES
Koichi Nishimura, and Masato Matsumiya, both of Kawasaki, Japan, assignors to Fujitsu Limited, Kawasaki, Japan
Filed Jul. 16, 1996, Ser. No. 680,961
Claims priority, application Japan, Jul. 19, 1995, 7-182720
Int. Cl.[6] G11C *13/00*
U.S. Cl. 365—189.09 **19 Claims**

1. A semiconductor memory device comprising:
pairs of bit lines;
first circuits which are respectively coupled to the pairs of bit lines and which precharge the pairs of bit lines and precharge the pairs of bit lines in accordance with a first control signal;

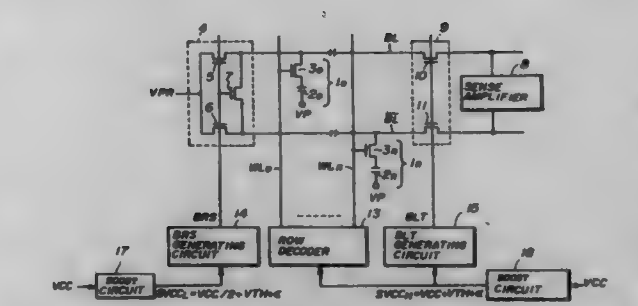

sense amplifiers respectively coupled to the pairs of bit lines;
second circuits which are respectively provided between the pairs of bit lines and the sense amplifiers and selectively connect the pairs of bit lines to the sense amplifiers in response to a second control signal;
a third circuit which produces first and second boosted voltages from a power supply voltage and supplies the first and second boosted voltages to the first and second circuits respectively, wherein the first control signal is produced from the first boosted voltage and the second control signal is produced from the second boosted voltage,
the first boosted voltage being lower than the second boosted voltage; and
wherein the second control signal is applied to word lines in order to drive the word lines.

5,703,815
HIGH-SPEED SEMICONDUCTOR MEMORY SYSTEM
Shigeru Kuhara, and Hideo Toyoshima, both of Tokyo, Japan, assignors to NEC Corporation, Tokyo, Japan
Division of Ser. No. 619,324, Mar. 21, 1996, abandoned. This application Feb. 18, 1997, Ser. No. 802,449
Claims priority, application Japan, Mar. 24, 1995, 7-91415
Int. Cl.[6] G11C *7/00*
U.S. Cl. 365—194 **7 Claims**

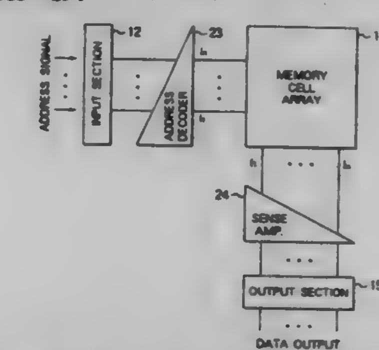

1. A semiconductor system comprising an input flip-flop for receiving input address signals in sequence, an address decoder for decoding each of said input address signals to generate a selection signal, a memory cell array having a plurality of memory cells arranged in an array, one of said memory cells being selected by said selection signal, a read-out section for reading out data from selected one of said memory cells to generate a data signal, an output flip-flop for outputting said data signal outside said memory system, each of said input flip-flop, address decoder, memory cell array, read-out section and output flip-flop defining a plurality of signal paths for respective signal components of a corresponding one of said signals, said plurality of signal paths including a first signal path and a second signal path which has a path length larger than a path length of said first signal path, at least one of said address decoder and read-out section has a first driver for driving said first signal path and a second driver for driving said second signal path, said first driver has a first current drivability larger than a second current drivability of said second driver.

5,703,816
FAILED MEMORY CELL REPAIR CIRCUIT OF SEMICONDUCTOR MEMORY
Hyo-Yun Nam, and Young-Ho Suh, both of Kyungki-do, Rep. of Korea, assignors to Samsung Electronics Co., Ltd., Suwon, Rep. of Korea
Filed Jun. 28, 1996, Ser. No. 672,619
Claims priority, application Rep. of Korea, Jun. 28, 1995, 17840/1995
Int. Cl.[6] G11C *7/00*
U.S. Cl. 365—200 **4 Claims**

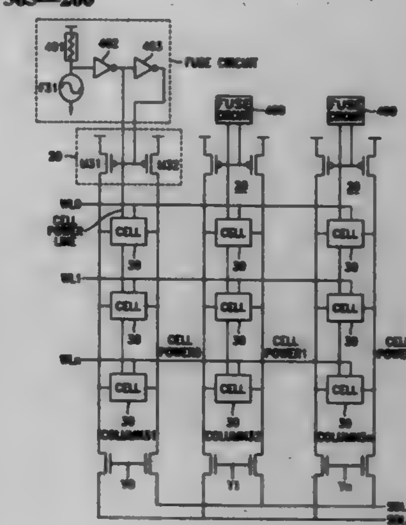

1. A failed memory cell repair circuit for use in a semiconductor memory having a plurality of memory cells, each of said memory cells including resistor load terminals connected through current limiting means, a pair of access transistors having drain terminals connected to said device load terminal, gate terminals connected to a word line, and source terminals connected to a pair of bit lines, and a pair of drive transistors having gate terminals cross-coupled to said drain terminals of said bit line pair in unit of column direction, said circuit comprising:
a first current cutoff means for cutting off a cell power provided to said memory cells in a selected column of the array through a cell power line; and
a second current cutoff means for cutting off the pair of precharge transistors that supply bit line pair precharge current to the cells in the selected column;
wherein said first current cutoff means is comprised of a resistor and a fuse sequentially connected between the cell power and the ground potential;
and includes a first inverter having an input terminal connected to a connecting point between the resistor and the fuse, for providing the ground potential to the resistor load terminals by blowing of the fuse, in the case where the memory cells are standby current failed cells,
and the second current cutoff means is connected to the first cutoff means so as to simultaneously cut off the power supply to the memory cells and the current supply to said precharge transistors, and said second current cutoff means comprises a second inverter connected to an output terminal of the first inverter, for providing a voltage level approximating the cell power to the gate terminals of the precharge transistor pair, in the case where the first inverter outputs the ground potential.

5,703,817
SEMICONDUCTOR MEMORY DEVICE

Shinichiro Shiratake, Tokyo; Daisaburo Takashima, Yokohama; Kenji Tsuchida, Kawasaki, and Tsuneo Inaba, Ichikawa, all of Japan, assignors to Kabushiki Kaisha Toshiba, Kawasaki, Japan

Filed Nov. 14, 1996, Ser. No. 748,779
Claims priority, application Japan, Nov. 17, 1995, 7-299939
Int. Cl.[6] G11C *7/00;29/00*
U.S. Cl. 365—200 **26 Claims**

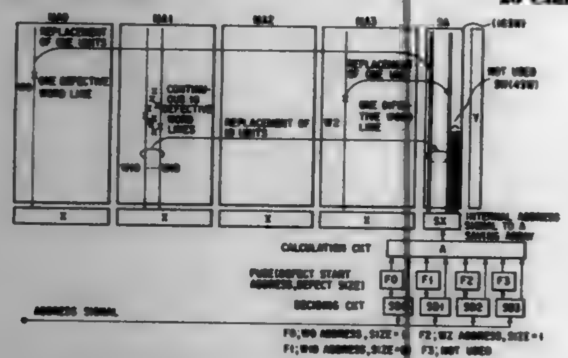

1. A semiconductor memory device comprising
a plurality of memory cells arranged at crosspoints between a plurality of word lines and a plurality of bit lines, the memory cells including normal and spare memory cells; and
a plurality of replacing means for replacing at least one word line or bit line connected to the normal memory cells with at least one word line or bit line connected to spare memory cells of the same number of the normal memory cells to be replaced, wherein
a plurality of kinds of numbers of replaced memory cells are set so as to effect replacement through the plurality of replacing means.

5,703,818
TEST CIRCUIT

Tokuya Osawa, Tokyo, Japan, assignor to Mitsubishi Denki Kabushiki Kaisha, Tokyo, Japan

Filed Mar. 4, 1997, Ser. No. 811,008
Claims priority, application Japan, Aug. 26, 1996, 8-223842
Int. Cl.[6] G11C *13/00*
U.S. Cl. 365—201 **17 Claims**

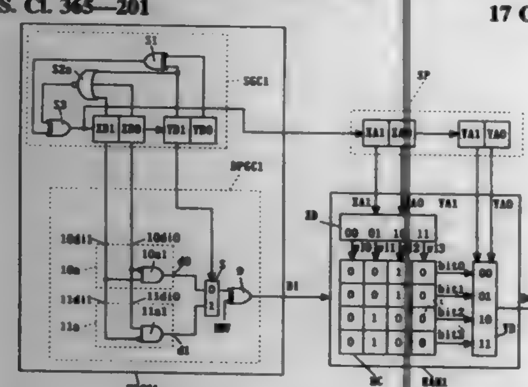

1. A test circuit comprising a shift register group for row address having first to nth row address registers and a shift register group for column address having first to mth column address registers (n and m are natural numbers of 2 or larger); and
said first to nth row address registers and said first to mth column address registers storing different first and second logics constituting a first binary logic, as configuration data configuring address data,
said test circuit testing a storage circuit having memory cells that are specified with row address data obtained by decoding said configuration data stored in said first to nth row address registers and column address data obtained by decoding said configuration data stored in said first to mth column address registers:
wherein said nth to first row address registers and said mth to first column address registers are connected in series in this order,
said nth row address register being supplied with said configuration data which is shifted in said nth to first row address registers and said mth to first column address registers in this order to provide all cycle sequence data as said address data,
and wherein an input terminal of said storage circuit is supplied with test data,
said test data selectively taking one of the different first and second logics which constitutes a second binary logic, depending on whether the number s (n≧s≧0) of said first logics of said first binary logic continuously stored from said first row address register toward said nth row address register is an even number or an odd number, in a first case where said first logic of said first binary logic is stored in said mth column address register, and
said test data selectively taking one of the different first and second logics which constitutes a third binary logic, depending on whether the number t (n≧t≧0) of said second logics of said first binary logic continuously stored from said first row address register toward said nth row address register is an even number or an odd number, in a second case where said second logic of said first binary logic is stored in said mth column address register.

5,703,819
SENSE AMPLIFIER DRIVING CIRCUIT

Kohtaroh Gotoh, Kawasaki, Japan, assignor to Fujitsu Limited, Kanagawa, Japan

Filed Mar. 17, 1997, Ser. No. 819,509
Claims priority, application Japan, Jun. 11, 1996, 8-149362
Int. Cl.[6] G11C *13/00*
U.S. Cl. 365—203 **7 Claims**

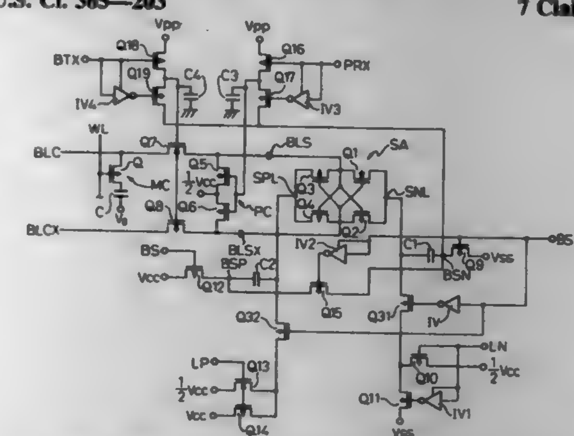

1. A sense amplifier driving circuit for driving a flip-flop type sense amplifier of a CMOS constitution in a dynamic random access memory, comprising:
bit-line connection transistors connected to link bit lines on the side of memory cells with bit lines on the side of said sense amplifier;
a circuit for controlling ON/OFF operations of said bit-line connection transistors; and
first and second capacitors coupled to respective sources of nMOS transistors and pMOS transistors of said sense amplifier,
wherein: after a word line linked to said memory cell is turned ON to output cell data to said bit lines, the potentials at input gates of said bit-line connection transistors are lowered to a level permitting narrowing-down of a current flowing in said bit lines; and after said sense amplifier is activated, a difference voltage between said bit lines on the side of said sense amplifier is amplified sufficiently, and then a data read operation is completed, said bit-line connection transistors are turned ON to overdrive said sense amplifier through said first and second capacitors.

5,703,820
SEMICONDUCTOR MEMORY DEVICE WITH PRECHARGE TIME IMPROVED

Takaki Kohno, Tokyo, Japan, assignor to NEC Corporation, Japan

Filed Feb. 4, 1997, Ser. No. 794,465
Claims priority, application Japan, Mar. 28, 1996, 8-074096
Int. Cl.[6] G11C *7/00*
U.S. Cl. 365—204 **18 Claims**

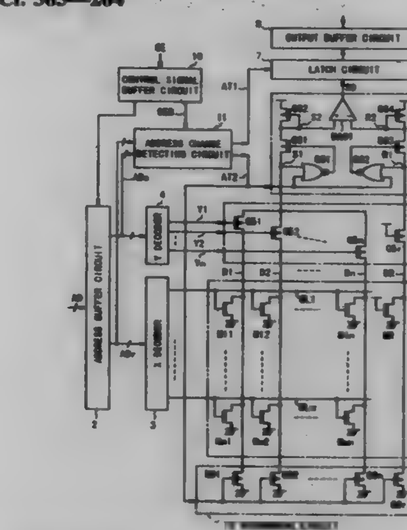

1. A semiconductor memory device, comprising:
a memory cell array composed of a plurality of memory cells arranged in a matrix manner and at least one reference memory cell, wherein a plurality of digit lines are respectively connected to columns of memory cells, a plurality of word lines are respectively connected to rows of memory cells, and a reference digit line is connected to said reference memory cell;
an address circuit for selecting one of said plurality of digit lines and one of said plurality of word lines in response to input of an address to select one of said plurality of memory cells;
a sense amplifier connected to said plurality of digit lines and said reference digit line, for sensing data which has been stored in said selected memory cell in response to a first portion of a sense control signal;
a discharging circuit for discharging charge of at least one of said plurality of digit lines which is connected to the selected memory cell and charge of said reference digit line in response to a second portion of said sense control signal; and
control means for outputting said sense control signal to said sense amplifier and said discharging circuit in response to the input of the address.

5,703,821
HIGH PERFORMANCE SINGLE PORT RAM GENERATOR ARCHITECTURE

Andrea Baroni, Viadana; Giovanni Mastrodomenico, Campobasso; Michele Taliercio, Arluno; Piero Capocelli, Milan, all of Italy; Luigi Carro, Porto Alegre, Brazil, and Rajamohan Varambally, Karnataka, India, assignors to SGS-Thomson Microelectronics S.r.l., Agrate Brianza, Italy

Continuation of Ser. No. 159,181, Nov. 30, 1993, Pat. No. 5,471,428. This application Nov. 27, 1995, Ser. No. 562,736
Claims priority, application European Pat. Off., Nov. 30, 1992, 92830644
Int. Cl.[6] G11C *7/00*
U.S. Cl. 315—210 **39 Claims**

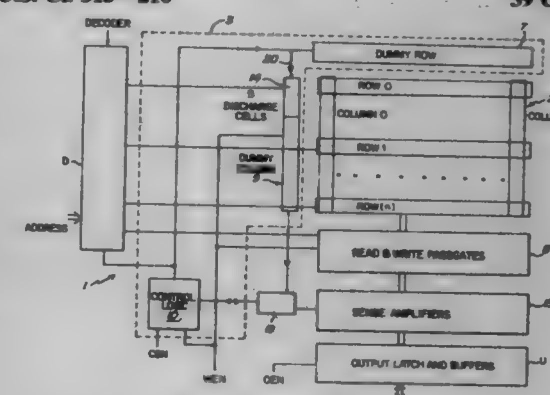

1. A memory device comprising:
a static RAM matrix; and
a self timed architecture, wherein the self timed architecture comprises a dummy row and a dummy column having, respectively, an equivalent load of a word line and of a bit column of said matrix, said dummy column being discharged at a faster rate than a corresponding bit column.

5,703,822
SERIAL ACCESS MEMORY DEVICE INCLUDING MEMORY SECTIONS HAVING DIFFERENT LATENCIES

Hiroaki Ikeda, Tokyo, Japan, assignor to NEC Corporation, Tokyo, Japan

Filed Jan. 22, 1997, Ser. No. 788,077
Claims priority, application Japan, Jan. 23, 1996, 8-009120
Int. Cl.[6] G11C *7/00*
U.S. Cl. 365—221 **7 Claims**

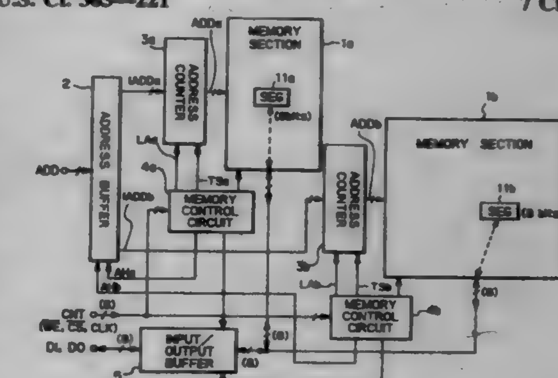

1. A serial access memory device comprising:
a first memory section divided into a plurality of first segments and having a first latency;
a second memory section divided into a plurality of second segments and having a second latency longer than said first latency;
first addressing means, connected to said first memory section, for sequentially generating first addresses to access the first segments of said first memory section;

second addressing means, connected to said second memory section, for sequentially generating second addresses to access the second segments of said second memory section; and

control means, connected to said first and second addressing means, for simultaneously initiating operations of said first and second addressing means and completing the operation of said first addressing means within a time period corresponding to said second latency.

5,703,823

MEMORY DEVICE WITH PROGRAMMABLE SELF-REFRESHING AND TESTING METHODS THEREFORE

David Elson Douse; Wayne Frederick Ellis, both of Jericho, and Erik Leigh Hedberg, Essex Junction, all of Vt., assignors to International Business Machines Corporation, Armonk, N.Y.

Division of Ser. No. 216,578, Mar. 22, 1994, Pat. No. 5,446,695. This application May 5, 1995, Ser. No. 435,606

Int. Cl.^{6} G11C *7/00*

U.S. Cl. 365—222 **20 Claims**

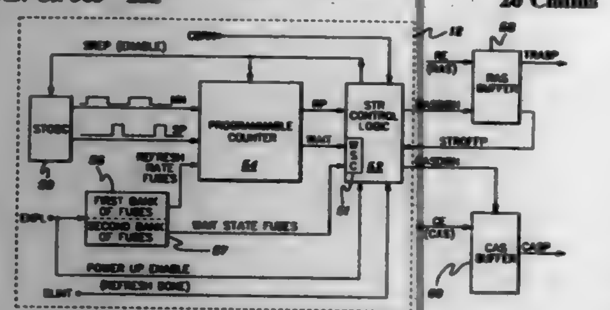

1. A data processing system comprising:

processing means for processing data; and

at least one memory means for storing data, said at least one memory means being electrically coupled to the processing means, each at least one memory means including a memory array accessed through word line and bit lines, and a refresh circuit integrated with the memory array, said refresh circuit including

a self-timed oscillator that outputs a clocking signal,

a programmable non-volatile frequency divider coupled to receive said clocking signal and output therefrom a signal transition based upon a programmed frequency division, and

refresh control logic connected to the programmable non-volatile frequency divider for receiving the signal transition output therefrom, said refresh control logic responding thereto by refreshing a portion of the memory array.

5,703,824

SEMICONDUCTOR MEMORY DEVICE

Satoshi Isa, Tokyo, Japan, assignor to NEC Corporation, Tokyo, Japan

Filed Sep. 24, 1996, Ser. No. 710,950

Claims priority, application Japan, Sep. 30, 1995, 7-276470

Int. Cl.^{6} G11C *29/00*

U.S. Cl. 365—225.7 **16 Claims**

1. A semiconductor memory devices equipped with a redundancy circuit which produces a redundancy selection signal indicative of whether or not an input address is coincident with a programmed address, said redundancy circuit comprising:

an address detection circuit having said programmed address and supplied with said input address, said address detection circuit generating a first voltage level at an output node thereof when said input address is coincident with said programmed address and a second voltage level at said output node when said input address is not coincident with said programmed address; and

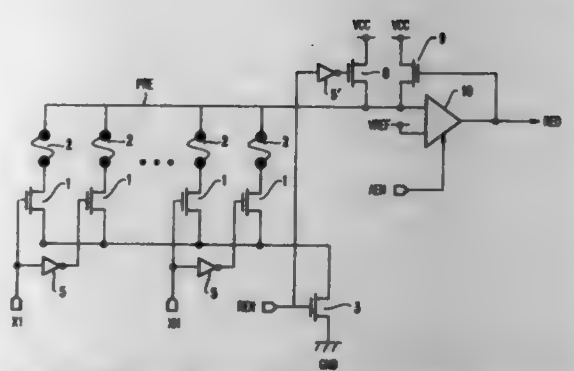

a differential circuit having a first input terminal connected to said output node of said address detection circuit, a second input terminal supplied with a reference voltage and an output terminal from which said redundancy selection signal is derived, said reference voltage having an intermediate level between said first voltage level and said second voltage level.

5,703,825

SEMICONDUCTOR INTEGRATED CIRCUIT DEVICE HAVING A LEAKAGE CURRENT REDUCTION MEANS

Takesada Akiba, Tachikawa, and Goro Kitsukawa, Hinode-machi, both of Japan, assignors to Hitachi Ltd., Tokyo, Japan

Filed Jan. 23, 1997, Ser. No. 785,417

Int. Cl.^{6} G11C *7/00*

U.S. Cl. 365—229 **21 Claims**

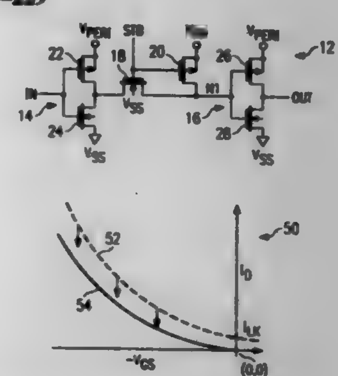

1. An output circuit comprising:

a first terminal for receiving a positive power supply voltage;

a second terminal for receiving a negative power supply voltage; and

a first inverter comprising a PMOS transistor and an NMOS transistor connected in series between said first and second terminals;

wherein, in a normal mode, an input signal to said first inverter, supplied to gates of said PMOS and NMOS transistors, has a first voltage level corresponding to said negative power supply voltage and a second voltage level corresponding to said positive power supply voltage, and

wherein, in a standby mode, said input signal to said first inverter has a third voltage level being higher than the level of said positive power supply voltage.

5,703,826

VIDEO RANDOM ACCESS MEMORY CHIP CONFIGURED TO TRANSFER DATA IN RESPONSE TO AN INTERNAL WRITE SIGNAL

Glen Hush, Bosie; Mike Seibert, Eagle; Jeff Mailloux, and Mark R. Thomann, both of Boise, all of Id., assignors to Micron Technology, Inc., Boise, Id.

Division of Ser. No. 69,967, May 28, 1993, Pat. No. 5,506,814. This application Mar. 18, 1996, Ser. No. 619,285

Int. Cl.^{6} G11C *8/00*

U.S. Cl. 365—230.05 **12 Claims**

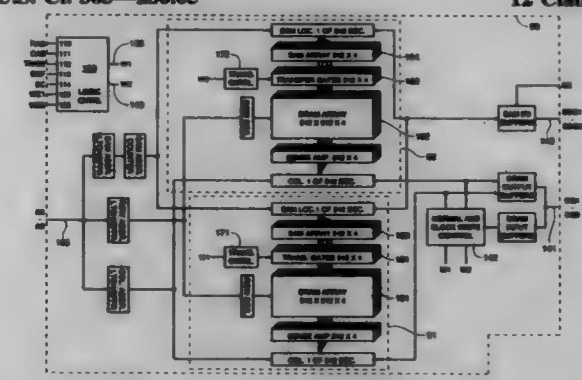

1. A monolithic video random access memory chip, comprising:

a) a random access memory port for accepting first electrical data;

b) a serial access memory port for accepting second electrical data;

c) a first dynamic random access memory portion having a first plurality of memory storage cells for storing said first and said second electrical data, said first dynamic random access memory portion in electrical communication with said random access memory port;

d) a second dynamic random access memory portion having a second plurality of memory storage cells for storing said first and said second electrical data, said second dynamic random access memory portion in electrical communication with said random access memory port;

e) a first serial access memory portion electrically interposed between said first dynamic random access memory portion and said serial access memory port, said first serial access memory portion accepting and storing said first and said second electrical data from said first dynamic random access memory and from said serial access memory port;

f) a second serial access memory portion electrically interposed between said second dynamic random access memory portion and said serial access memory port, said second serial access memory portion accepting and storing said first and said second electrical data from said second dynamic random access memory and from said serial access memory port;

g) first transfer circuitry electrically interposed between said first serial access memory portion and said first dynamic random access memory portion, said first transfer circuitry for transferring said second electrical data between said first serial access memory portion and said first dynamic random access memory portion when activated by a first internal write signal; and

h) second transfer circuitry electrically interposed between said second serial access memory portion and said second dynamic random access memory portion, said second transfer circuitry for transferring said second electrical data between said second serial access memory portion and said second dynamic random access memory portion when activated by a second internal write signal.

5,703,827

METHOD AND STRUCTURE FOR GENERATING A BOOSTED WORD LINE VOLTAGE AND A BACK BIAS VOLTAGE FOR A MEMORY ARRAY

Wingyu Leung, Cupertino, and Jeffrey J. Lin, Danville, both of Calif., assignors to Monolithic System Technology, Inc., Sunnyvale, Calif.

Filed Feb. 29, 1996, Ser. No. 610,108

Int. Cl.^{6} G11C *7/00*

U.S. Cl. 365—230.06 **20 Claims**

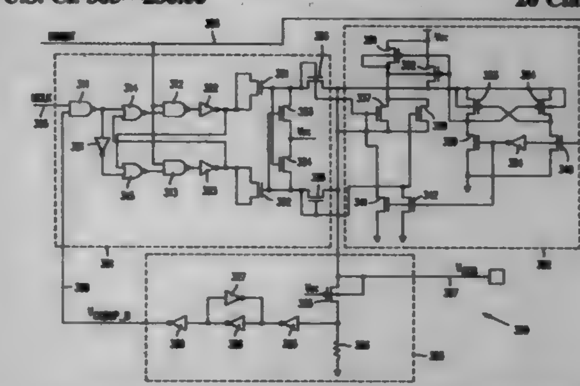

1. A semiconductor memory fabricated on a substrate, the memory having a word line, a first voltage supply for providing a first supply voltage, and a second voltage supply for providing a second supply voltage, the first supply voltage being greater than the second supply voltage, the memory comprising:

a first voltage generation circuit coupled to the first and second voltage supplies, the voltage generation circuit generating a substantially constant boosted voltage which exceeds the first supply voltage;

a driver circuit coupled to the first voltage generation circuit and the word line, the driver circuit being adapted to selectively apply the boosted voltage to the word line; and

a second voltage generation circuit coupled to the first and second voltage supplies, the second voltage generation circuit generating a substantially constant bias voltage generation which is less than the second supply voltage, the second voltage generation circuit being coupled to the substrate, thereby applying the bias voltage to the substrate.

5,703,828

SEMICONDUCTOR MEMORY

Churoo Park, 90-25, Woncheon-dong, Kwonsun-gu, Suwon-city, Kyungki-do; Hyun-Soon Jang, 11-1007, Miseong APT., Boolkwang-dong, Eunpyeong-gu, Seoul; Chull-Soo Kim, 200-40, Maetan 2-dong, Paldal-gu, Suwon-city, Kyungki-do; Myung-Ho Kim, 105-1106, Hanshin APT., Ingye-dong, Kwonsun-gu, Suwon-city; Seung-Hun Lee, 208-1, Maetan 2-dong, Paldal-gu, Suwon-city, Kyungki-do; Si-Yeol Lee, San 24, Nongseo-ri, Kiheung-eup, Yongin-gun, Kyungki-do; Ho-Cheol Lee, 227-242, Jayang 3-dong, Seongdong-gu, Seoul; Tae-Jin Kim, La-dong, 909, Sora APT., Bangbae-dong, Seocho-gu, Seoul, and Yun-Ho Choi, 303, Youngdong villa, 998-13, Kwonsun-dong, Kwonsun-gu, Suwon-city, Kyungki-do, all of Rep. of Korea

Division of Ser. No. 130,138, Oct. 4, 1993. This application Dec. 29, 1995, Ser. No. 580,622

Claims priority, application Rep. of Korea, Oct. 2, 1992, 18130; Oct. 2, 1992, 18131; Apr. 27, 1993, 7127

Int. Cl.^{6} G11C *8/00*

U.S. Cl. 365—230.03 **14 Claims**

1. A dynamic random access memory comprising:

a plurality of memory banks, each bank including a plurality of memory cells having addresses associated therewith and a separate address buffer for qenerating addresses and operable in one of an active cycle and a precharge cycle at any one time;

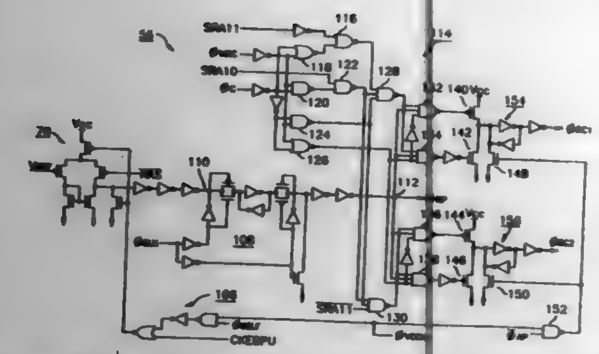

first means for receiving a row address strobe signal and producing a first signal;
second means for receiving a column address strobe signal and producing a second signal;
third means for receiving a write enable signal and producing a third signal;
address input means for receiving a portion of one of said addresses to indicate selection of one of said memory banks; and
logic means, responsive to said first, second and third signals and said one address portion, for generating a separate row address strobe clock for each of said plurality of memory banks and allow for each memory bank to operate with overlapping active cycles using addresses from said separate address buffer associated with each said memory bank.

5,703,829
SYNCHRONOUS TYPE SEMICONDUCTOR MEMORY DEVICE WHICH CAN BE ADAPTED TO HIGH FREQUENCY SYSTEM CLOCK SIGNAL
Tomio Suzuki; Shigeru Mori, and Takayuki Miyamoto, all of Hyogo, Japan, assignors to Mitsubishi Denki Kabushiki Kaisha, Tokyo, Japan
Filed Jul. 23, 1996, Ser. No. 681,428
Claims priority, application Japan, Dec. 28, 1995, 7-343511
Int. Cl.⁶ G11C *8/00*
U.S. Cl. 365—233 **11 Claims**

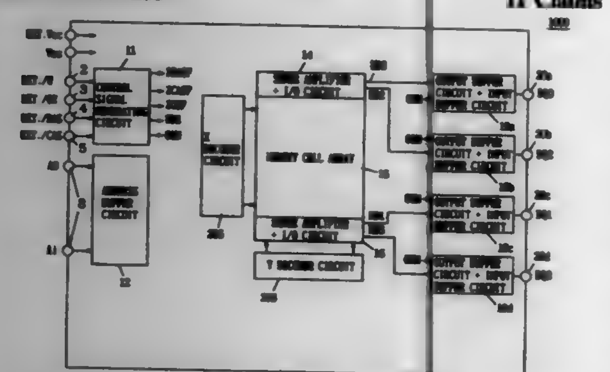

1. A semiconductor memory device, comprising:
a memory cell array having a plurality of memory cells arranged in rows and columns;
column selecting means activated at the time of activation of a column address strobe signal for simultaneously selecting a plurality of columns of said memory cell array according to a column address signal;
a plurality of data reading and amplifying means each for amplifying data of a memory cell of a corresponding column among said plurality of columns;
data output means for sequentially providing data amplified by said plurality of data reading and amplifying means to an output buffer in synchronism with activation of said column address strobe signal; and
output buffer control means responsive to any transition of said column address strobe signal from an active state to a non-active state for activating said output buffer.

5,703,830
SYNCRONOUS DYNAMIC SEMICONDUCTOR MEMORY DEVICE USING PIPELINED MULTI-BIT PREFETCH ARCHITECTURE
Takai Yasuhiro, Tokyo, Japan, assignor to Nec Corporation, Tokyo, Japan
Filed Aug. 23, 1996, Ser. No. 701,879
Int. Cl.⁶ G11C *8/00*
U.S. Cl. 365—233 **4 Claims**

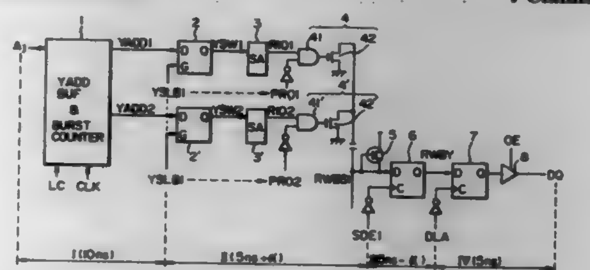

1. A synchronous dynamic semiconductor memory device comprising:
a column address buffer including burst counters and generating first and second series of address signals in synchronization with every two clock cycles of a clock signal;
a first column decoder, connected to said column address buffer, for decoding said first series of address signals in synchronization with every two clock cycles of said clock signal;
a second column decoder, connected to said column address buffer, for decoding said second series of address signals in synchronization with every two clock cycles of said clock signal;
a first sense amplifier, connected to said first column decoder, for amplifying a first data signal in accordance with a first column switch signal of said first column decoder and generating a voltage at a first read bus;
a second sense amplifier, connected to said second column decoder, for amplifying a second data signal in accordance with a second column switch signal of said second column decoder and generating a voltage at a second read bus;
a first first-stage data amplifier, connected to said first read bus, for amplifying the voltage of said first read bus and transmitting an amplified voltage of said first read bus to a read/write bus in synchronization with every two clock cycles of said clock signal;
a second first-stage data amplifier, connected to said second read bus, for amplifying the voltage of said second read bus and transmitting an amplified voltage of said second read bus to said read/write bus in synchronization with every two clock cycles of said clock signal, said second first-stage data amplifier being operated time-divisionally with said first first-stage data amplifier;
a second-stage data amplifier, connected to said read/write bus, for amplifying a voltage of said read/write bus in synchronization with every one clock cycle of said clock signal; and
a data latch circuit, connected to said second-stage data amplifier, for latching an output of said second-stage data amplifier in synchronization with every one clock cycle of said clock signal to generate an output data signal.

5,703,831
SYNCHRONOUS SEMICONDUCTOR MEMORY DEVICE HAVING INTERNAL CIRCUITRY ENABLED ONLY WHEN COMMANDS ARE APPLIED IN NORMAL SEQUENCE
Seiji Sawada, Hyogo, Japan, assignor to Mitsubishi Denki Kabushiki Kaisha, Tokyo, Japan
Filed Dec. 16, 1996, Ser. No. 768,081
Claims priority, application Japan, Dec. 19, 1995, 7-330393
Int. Cl.⁶ G11C *7/00*
U.S. Cl. 365—233 **9 Claims**

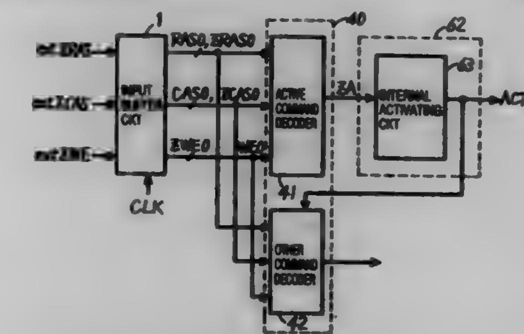

1. A synchronous semiconductor memory device operating in synchronization with an externally, periodically and repetitively applied clock signal, comprising:
a first command decoder for determining states of a plurality of external control signals applied externally in synchronization with said clock signal, and generating an activating signal activating a predetermined first internal operation when a first combination of states of said external control signals is found; and
a second command decoder enabled in response to the activating signal from said first command decoder to determine the states of said plurality of external control signals applied in synchronization with said clock signal and activate a second internal operation different from said first internal operation when a second combination of states of the external control signals different from said first combination of states is found.

5,703,832
T_{RAS} PROTECTION CIRCUIT
Tah-Kang Joseph Ting; Ching-Chih Hsieh, both of Hsinchu, and Bor-Doou Rong, Chupei, all of Taiwan, assignors to Etron Technology, Inc., Hsin-Chu, Taiwan
Filed Feb. 28, 1997, Ser. No. 808,267
Int. Cl.⁶ G11C *7/00*
U.S. Cl. 365—233 **18 Claims**

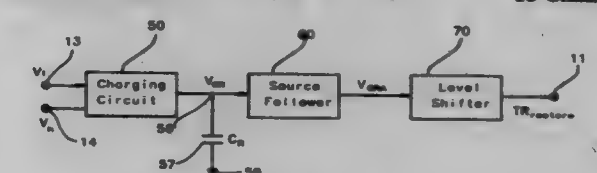

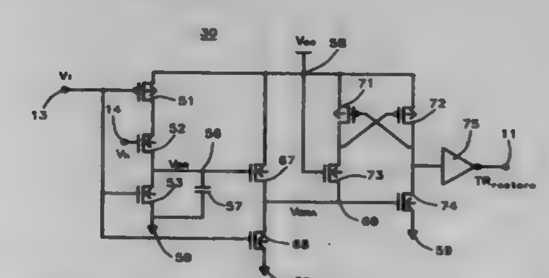

2. A memory array t_{RAS} protection circuit comprising:
a timing reference circuit to track a bitline restore time of a memory array cell, with a first input, a second input, and an output, said output of said timing reference circuit providing a logical one voltage level and a logical zero voltage level;
a row activation control logic to produce a row control timing of a memory array, with a first input, a second input, and an output, said second input of said row activation control logic connected to said output of said timing reference circuit, said output of said row activation control logic providing a logical one voltage level and a logical zero voltage level;
a row command register issuing a logical one voltage level during an active period of a memory cycle and a logical zero voltage level during an inactive period of said memory cycle connected to said first input of said row activation control logic; and
an internal circuitry to produce a high isolation voltage and a gating signal for said timing reference circuit, with an input, a first output, and a second output, said input of said internal circuitry connected to said output of said row activation control logic, said first output of said internal circuitry connected to said first input of said timing reference circuit, and said second output of said internal circuitry connected to said second input of said timing reference circuit.

5,703,833
ONE STEP INVERSION/SEPARATION SCHEME USING A PLURALITY OF VIBRATOR SOURCES
Kenneth Paul Allen, Dallas, Tex., assignor to Mobil Oil Corporation, Fairfax, Va.
Filed Nov. 13, 1995, Ser. No. 555,655
Int. Cl.⁶ G01V *1/36;1/28*
U.S. Cl. 367—46 **14 Claims**

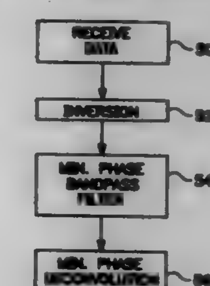

1. A method for processing high resolution vibroseis data comprising the steps of:
receiving electrical signals representing received seismic information generated by multiple vibrators;
receiving measured signals representing transmitted seismic waves from said multiple vibrators;
performing an inversion function on said electrical signals with said measured signals to obtain inversion electrical signals; and
performing minimum phase deconvolution on said inversion electrical signals.

5,703,834
ULTRASONIC SENSOR AND METHOD OF USING SUCH A SENSOR
Pierre Bonnefoy, Cagnes-Sur-Mer, France, assignor to IMRA Europe SA, Valbonne, France
Filed Mar. 25, 1996, Ser. No. 621,435
Claims priority, application France, Mar. 23, 1995, 95 03414
Int. Cl.⁶ G01S *15/00*
U.S. Cl. 367—99 **9 Claims**

1. An ultrasonic sensor for detecting the location of objects disposed in a substantially gaseous environment, comprising:
a plurality of nodes arranged into a uniform network; and
a plurality of circular transducers that operate at a specified set of frequencies, each transducer having a diameter of approximately a wavelength of acoustic waves emitted by the transducers and having a center and disposed at a node such that

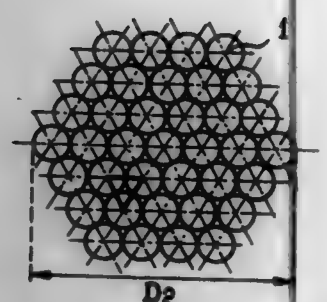

the center of adjacent transducers are spaced at a distance no greater than the wavelength of acoustic waves emitted by the transducers, wherein the transducers are arranged into several rows, the transducers of each row sharing a common axis, such that the axes intersect at a center of a common central transducer.

5,703,835
SYSTEM FOR EFFECTIVE CONTROL OF URBAN ENVIRONMENT SECURITY

J. Brian Sharkey; Randy A. Doblar, both of Alexandria; Frank E. Bothwell, Falls Church, all of Va.; Ronald A. Belt, Plymouth, Minn., and Edward A. Page, Kensington, Md., assignors to Alliant Techsystems Inc., Hopkins, Minn.
Continuation of Ser. No. 250,743, May 27, 1994, Pat. No. 5,504,717. This application Apr. 1, 1996, Ser. No. 627,323
Int. Cl.⁶ G01S *3/80*
U.S. Cl. 367—124 **9 Claims**

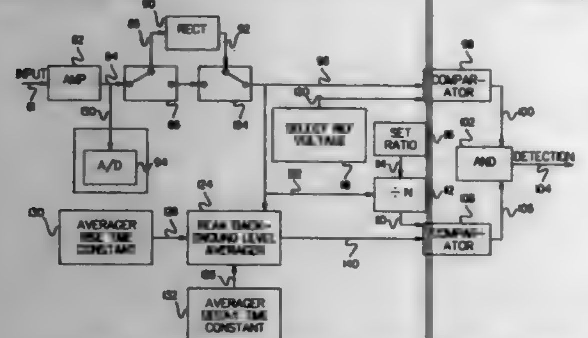

1. A security system for detecting a gunshot event, wherein a gunshot event produces an acoustic signature including an initial pulse and subsequent pulse pattern, the security system comprising:
(a) a communication link;
(b) a plurality of pole units arranged in a dense grid, wherein each one of the plurality of pole units includes,
(i) a microphone for providing an output signal in response to an acoustic event,
(ii) a signal conditioning and thresholding unit coupled to said microphone wherein the signal conditioning and thresholding unit outputs a detection signal when the output signal exceeds a peak background average signal, where the peak background average signal is dynamically determined,
(iii) a data acquisition and signal processing unit for discriminating gunshot events connected to receive the detection signal, wherein the data acquisition and signal processing unit remains in a powered down stand-by mode so as to conserve energy until the detection signal is received, and wherein the data acquisition and signal processing unit includes means for identifying a gunshot event by measuring an initial pulse time duration and a plurality of subsequent pulse pattern features in the detection signal, and,
(iv) a communication interface coupled at an input to the data acquisition and signal processing unit, the communication interface also being coupled to the communication link, where the communication interface transmits and receives data on the communication link; and
(c) a central processor coupled to the communication link so as to receive data from the plurality of pole units where the central processor and the plurality of pole units operate so as to detect and locate gunshot events sensed by one or more of the plurality of pole units.

5,703,836
ACOUSTIC TRANSDUCER

Douglas S. Drumheller, Cedar Crest, N. Mex., assignor to Sandia Corporation, Albuquerque, N. Mex.
Filed Mar. 21, 1996, Ser. No. 620,057
Int. Cl.⁶ H04R *17/00*
U.S. Cl. 367—165 **15 Claims**

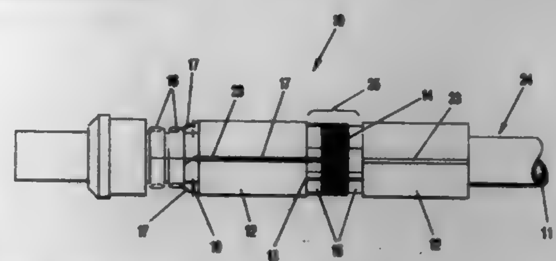

1. An active acoustic transducer comprising a one-piece hollow mandrel in the form of a modified cylinder that is symmetric about a central axis into the outer surface of which mandrel is formed a recess with sides perpendicular to the central axis, said sides being separated by a first distance, and with a bottom parallel to the central axis and at a constant radial distance therefrom and within which recess are a plurality of segmented washer-shaped discs of a piezoelectric material, the washer-shaped discs having an inner radius slightly larger than the constant radial distance of the bottom of the recess and an outer radius slightly less than the top of the sides of the recess with the plurality of discs being captured between the sides of the recess in a pre-stressed interference fit.

5,703,837
WATCH WITH LIGHT TRANSMITTING TYPE DISPLAY PLATE

Toshio Umemoto; Masami Fukuda; Kenji Shimoda; Yasuo Kitajima; Isamu Kobayashi, and Yurie Udou, all of Tanashi, Japan, assignors to Citizen Watch Co., Ltd., Tokyo, Japan
PCT No. PCT/JP95/00188, § 371 Date Nov. 15, 1995, § 102(e) Date Nov. 15, 1995, PCT Pub. No. WO95/27234, PCT Pub. Date Oct. 12, 1995
PCT Filed Feb. 10, 1995, Ser. No. 549,702
Claims priority, application Japan, Mar. 31, 1994, 6-63450; Apr. 8, 1994, 6-70299; May 23, 1994, 6-108372
Int. Cl.⁶ G04B *19/30;19/06*
U.S. Cl. 368—88 **21 Claims**

1. A watch comprising,
a movement,
a cell made of one of a light-emitting member and a light-absorbing member laminated onto the movement,
a support member disposed above the cell for fixing the same,
a light transmitting type display plate formed of one of a transparent plate and a semitransparent plate add arranged above the cell,
means for forming a gap disposed between the display plate and the cell, said gap forming means preventing formation of light interference fringes over the cell, and
positioning means having a first positioning section formed on the support member and a second positioning section formed on an outer periphery of the light transmitting type display plate, said first and second positioning sections being engaged together so that the display plate and the cell are fixed relative to the support member, and an additional gap is formed

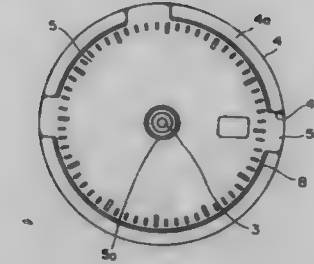

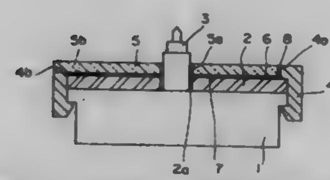

between the outer periphery of the display plate except the second positioning section and an inner periphery of the support member except the first positioning section.

5,703,838
VERNIER DELAY LINE INTERPOLATOR AND COARSE COUNTER REALIGNMENT

Mark S. Gorbics, Franklin Lakes, N.J.; Keith M. Roberts, Nyack, and Richard L. Sumner, Pomona, both of N.Y., assignors to LeCroy Corporation, Chestnut Ridge, N.Y.
Filed Feb. 16, 1996, Ser. No. 602,904
Int. Cl.⁶ G04F *8/00;* **H03K** *5/13*
U.S. Cl. 368—120 **15 Claims**

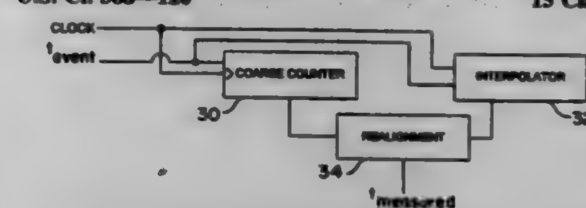

1. A vernier delay line interpolator for measuring an interval of time smaller than a pulse period, comprising:
a tapped delay line for receiving a clock signal having a predetermined pulse period and including a plurality of taps at equal time-intervals along the delay line, the total delay of said delay line being a harmonic H greater than 1 of the pulse period;
latch means for latching the taps of said tapped delay line; and
decoding means for decoding the latched taps to derive a value representative of a fraction of said pulse period.

5,703,839
MAGNETIC HEAD FOR MAGNETOOPTICAL RECORDING APPARATUS

Kazuyoshi Ishii, Tokyo, Japan, assignor to Canon Kabushiki Kaisha, Tokyo, Japan
Filed Jun. 12, 1995, Ser. No. 489,458
Claims priority, application Japan, Jun. 14, 1994, 6-131849; May 26, 1995, 7-127828
Int. Cl.⁶ G11B *11/00*
U.S. Cl. 369—13 **16 Claims**

1. A magnetic head for magnetooptical recording comprising:
a slider base;
a core comprising a magnetic material, mounted on said slider base, said core having a main pole;
a thin plate-shaped cover member which surrounds the periphery of said main pole, an upper end face of which is exposed, said cover member being composed of an antiabrasive material and a front surface of said cover member being arranged to face a magnetooptical recording medium; and

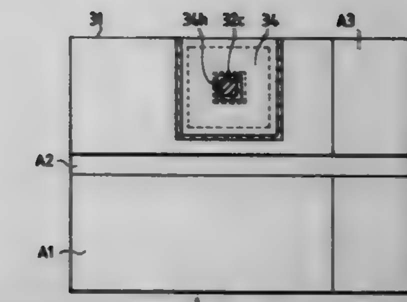

a coil composed of a thin film conductor formed on a rear surface of said cover member, said coil being formed spirally by patterning.

5,703,840
MAGNETIC HEAD AND MAGNETO-OPTICAL RECORDING DEVICE

Tohio Kazama, Nagaoka, Japan, assignor to Alps Electric Co., Ltd., Tokyo, Japan
Continuation of Ser. No. 418,309, Apr. 7, 1995, abandoned. This application Dec. 19, 1996, Ser. No. 770,608
Claims priority, application Japan, Apr. 13, 1994, 6-099337
Int. Cl.⁶ G11B *5/012;11/10*
U.S. Cl. 369—13 **11 Claims**

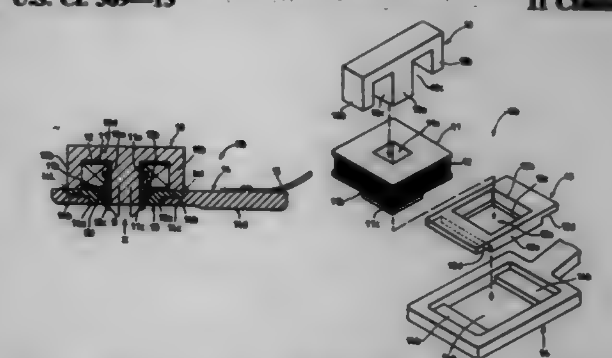

1. A magnetic head for a magneto-optical recording device in which the magnetic head is disposed adjacent a surface of a recording medium, said magnetic head comprising:
a magnetic core formed from a first integral piece of magnetic material, the magnetic core including:
an elongated base member;
a main core portion extending perpendicular to the base member, the main core portion having a fixed end fixedly connected to the base member, and a free end located further from the base member than the fixed end; and
a side core portion extending perpendicular to the base member and parallel to the main core portion, the side core portion having a fixed end fixedly connected to the base member and a free end located further from the base member than the fixed end, the free end of the side core portion being spaced a first distance from said main core portion;
a coil wound around the main core portion such that a portion of the coil is located between the main core portion and the side core portion; and
an auxiliary core formed from a second integral piece of magnetic material which is separate from said first integral piece, the auxiliary core contacting the free end of the side core portion and having a central portion extending from the side core portion toward the main core portion, the central portion defining an opening having an edge which is spaced a second distance from the free end of the main core portion such that a magnetic gap is formed between the edge and the free end of said main core portion;
wherein the first distance is greater than the second distance such that magnetic flux generated by the main core portion flows from the free end of the main core portion across the

magnetic gap and along a return path formed by the auxiliary core and the side core portion.

5,703,841
OPTICAL INFORMATION RECORDING/REPRODUCING APPARATUS AND METHOD WITH FUNCTION OF ADJUSTING REPRODUCING POWER
Tomoyuki Hiroki, Zama, Japan, assignor to Canon Kabushiki Kaisha, Tokyo, Japan
Continuation of Ser. No. 340,393, Nov. 15, 1994, abandoned. This application Jan. 9, 1997, Ser. No. 781,141
Claims priority, application Japan, Nov. 17, 1993, 5-287851; Nov. 17, 1993, 5-287852; Nov. 17, 1993, 5-287853
Int. Cl.⁶ G11B *11/00*
U.S. Cl. 369—13 **26 Claims**

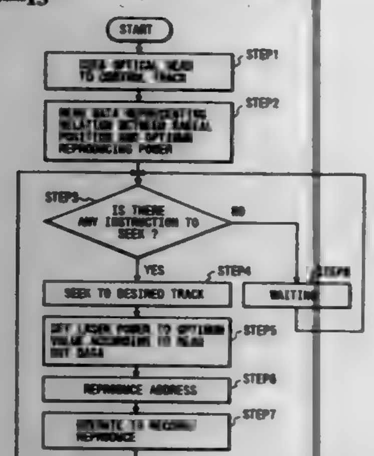

1. An optical information recording/reproducing apparatus in which, while a magnetooptical recording medium formed by stacking at least a recording layer, which includes a perpendicular magnetization film for magnetically holding information, and a reproducing layer to which the information of the recording layer is transferred, is rotated at a fixed angular velocity, a laser beam is irradiated in the form of a beam spot onto the recording medium from the reproducing layer side, thereby reproducing the information held by the recording layer by transferring the information to the reproducing layer only in a portion of the beam spot, said apparatus comprising:
a light source for generating the laser beam;
a drive circuit for driving said light source to adjust an intensity of the laser beam;
means for reproducing information previously recorded on a control track on the recording medium and which indicates a relation of the intensity of the laser beam to a radial position of the recording medium upon reproduction; and
control means for adjusting the intensity of the laser beam by controlling said drive circuit on the basis of the reproduced information indicating the relation of the intensity of the laser beam to the radial position on the recording medium.

5,703,842
INFORMATION RECORDING/REPRODUCING APPARATUS FOR EXECUTING SYSTEM CONTROL AND SERVO CONTROL BY SINGLE CPU
Nobuyuki Tonegawa, Kawasaki, Japan, assignor to Canon Kabushiki Kaisha, Tokyo, Japan
Filed Sep. 6, 1995, Ser. No. 524,412
Claims priority, application Japan, Sep. 8, 1994, 6-214929
Int. Cl.⁶ G11B *7/00*
U.S. Cl. 369—32 **3 Claims**

1. An information recording/reproducing apparatus comprising:
single arithmetic means for executing, in parallel, system processing for processing a command from a host computer and

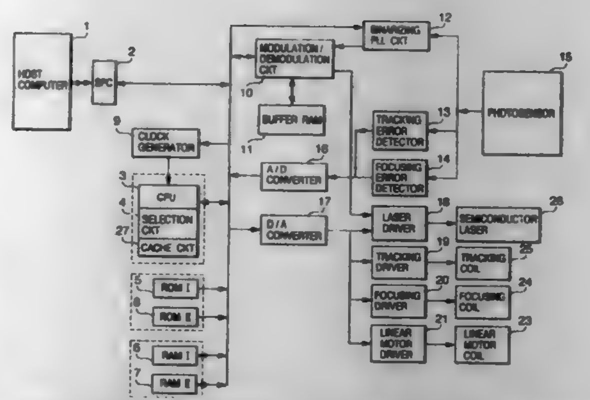

servo control processing for positioning a recording/reproducing head on a target track by interrupting the servo control processing into the system processing,
wherein said arithmetic means causes an interrupt frequency of the servo control processing to be made higher as the head nears the target track and sets a frequency of a synchronizing signal for recording and/or reproducing information when the interrupt frequency is low.

5,703,843
LIBRARY APPARATUS WITH A PLURALITY OF CELLS FOR STORING CARTRIDGES ACCOMMODATING MEMORY MEDIA THEREIN AND METHOD FOR ASSEMBLING LIBRARY APPARATUS
Yukio Katsuyama, and Kengo Yamakawa, both of Kawasaki, Japan, assignors to Fujitsu Limited, Kawasaki, Japan
Filed Feb. 27, 1996, Ser. No. 607,833
Claims priority, application Japan, Feb. 28, 1995, 7-067111
Int. Cl.⁶ G11B *17/22*
U.S. Cl. 369—34 **11 Claims**

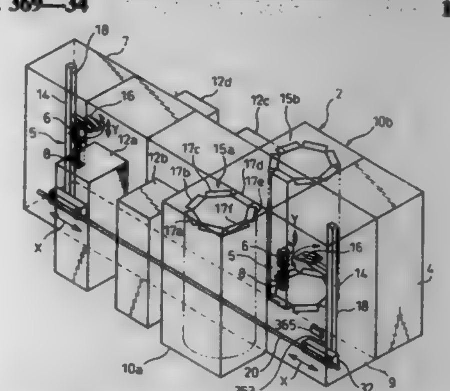

1. A library apparatus with a plurality of cells for storing cartridges accommodating memory media therein, used for data retrieval needing a large capacity, comprising:
a reference unit arranged at a center of the library apparatus;
at least one accessor unit arranged at at least one longitudinal end of the library apparatus;
at least one passage unit arranged between the reference unit and the accessor unit;
at least one drum unit with a plurality of cells for storing the cartridges accommodating the memory media;
at least one drive unit, provided on at least one side of the reference unit, for recording on and regenerating from the memory media accommodated in the cartridges, the drive unit including a housing having an area for mounting a selected one of a manual mount cell and an accessor mount cell, the manual mount cell having a first fixing member for fixing the manual mount cell to the mounting area of the housing when the manual mount cell is selected and the accessor mount cell having a second fixing member for fixing the accessor mount cell to the mounting area of the housing when the accessor mount cell is selected;

at least one guide rail provided through the reference unit, the accessor unit and the passage unit; and
at least one accessor provided in the accessor unit to be movable on the guide rail, for transporting the cartridges between the drum unit and the drive unit.

5,703,844
DEVICE FOR PLAYING BACK DISKS
Michihiro Asano, Tokyo, Japan, assignor to Nakamichi Corporation, Tokyo, Japan
Division of Ser. No. 253,735, Jun. 3, 1994, Pat. No. 5,604,721. This application Aug. 9, 1996, Ser. No. 689,330
Claims priority, application Japan, Jun. 3, 1993, 5-157913
Int. Cl.⁶ G11B *17/22*
U.S. Cl. 369—36 **13 Claims**

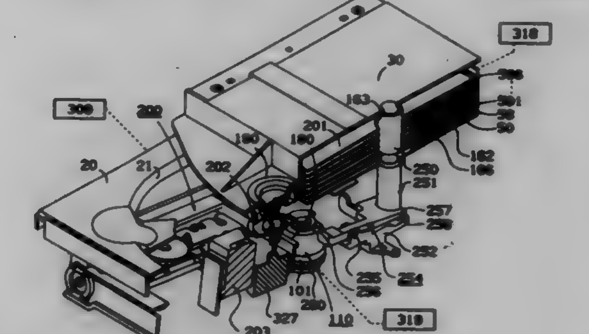

6. A device for playing back disks, comprising:
means for storing a plurality of disks;
said device having a playback position;
means for reading a selected disk of said disks while at said playback position;
means for transporting said selected disk between said playback position and a store position in said means for storing;
said means for transporting having means for holding at least said selected disk; and
means for detecting a faulty attempt to transport said selected disk from said playback position to said store position;
said means for detecting a faulty attempt including means for detecting a presence of said selected disk remaining in said playback position after said means for transporting unsuccessfully has attempted to transport said selected disk and has moved from said playback to said store position.

5,703,845
READING DEVICE WITH CROSS-TALK CORRECTION OF TWO SIGNAL TRAINS
Michel Audoin, Villeneuve St Georges; Bertrand Moreau, Plougonvelin, and Joseph Colineau, Bures sur Yvette, all of France, assignors to Thomson-CSF, Paris, France
Filed Nov. 15, 1995, Ser. No. 559,319
Claims priority, application France, Nov. 25, 1994, 94 14147
Int. Cl.⁶ G11B *7/00*
U.S. Cl. 369—44.41 **9 Claims**

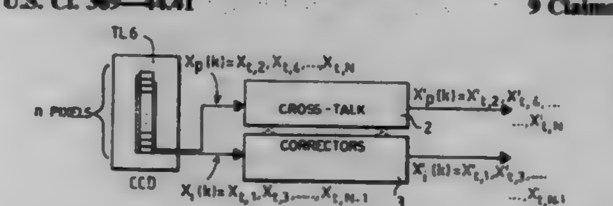

1. A device for reading a record medium having at least one frame of information segments arranged side by side in alternating odd and even positions, said device comprising:
a reading head for carrying out parallel reading of said frame of information segments with a first group of reading elements that are arranged to read only odd position information segments to produce an odd signal train and a second group of reading elements that are arranged to read only even position information segments to produce an even signal train;
a first cross-talk correction circuit including first input circuitry connected to receive each of the odd and even signal trains, said first input circuitry supplying first cross-talk correction circuit inputs with an odd target signal segment that corresponds to an odd target information segment of said frame along with two adjacent even signal segments from the even signal train that correspond to even information segments of said frame which are adjacent to the odd target information segment, said first cross-talk correction circuit providing a cross-talk corrected odd output signal stream of cross-talk corrected odd target signal segments;
a second cross-talk correction circuit including second input circuitry connected to receive each of the odd and even signal trains, said second input circuitry supplying second cross-talk correction circuit inputs with an even target signal segment that corresponds to an even target information segment of said frame along with two adjacent even signal segments from the odd signal train that correspond to odd information segments of said frame which are adjacent to the even target information segment, said second cross-talk correction circuit providing a cross-talk corrected even output signal stream of cross-talk corrected even target signal segments.

5,703,846
OPTICAL DISK TRACKING CONTROL METHOD, OPTICAL DISK DEVICE, AND OPTICAL DISK WITH INCREASED RECORDING DENSITY
Atsushi Saito, Hino, and Hisataka Sugiyama, Kodaira, both of Japan, assignors to Hitachi, Ltd., Tokyo, Japan
Filed Oct. 12, 1994, Ser. No. 321,619
Claims priority, application Japan, Oct. 13, 1993, 5-255354
Int. Cl.⁶ G11B *7/00*
U.S. Cl. 369—44.26 **6 Claims**

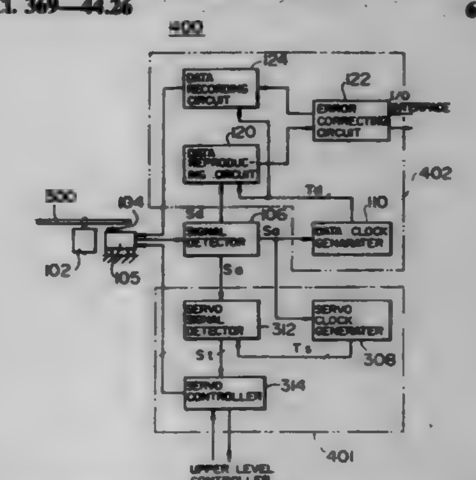

6. An optical disk device for reproducing data from or recording data onto an optical disk having a plurality 0f reference marks Mk arranged at intervals of P in the radial direction, deviant marks H2 arranged so as to deviate by P/4 toward the outside of the radial direction from the reference marks Mk, and deviant marks H2 arranged so as to deviate by P/4 toward tfie inside of the radial direction from said reference marks Mk, said optical disk device comprising:
a servo signal detector for generating a tracking error signal A from a difference between a light quantity corresponding to said deviant mark H1 and a light quantity corresponding to said reference mark Mk, generating a tracking error signal B from a difference between the light quantity corresponding to said reference mark Mk and a light quantity corresponding to said deviant mark H2, generating a tracking error signal C from a difference between the light quantity corresponding to said deviant mark H1 and the light quantity corresponding to

said deviant mark H2, and generating a tracking error signal D from a difference between said tracking error signal A and said tracking error signal B; and

a servo controller for generating a servo control signal for positioning a light spot on data tracks which are arranged at intervals of P/8 in the radial direction based on said tracking error signals A, B, C and D.

5,703,847

Patent Not Issued For This Number

5,703,848

OFF TRACK DETECTION SYSTEM FOR RUGGEDIZED OPTICAL DISK DRIVE

Gregory V. Hofer, Boise, Id., assignor to Hewlett-Packard Company, Palo Alto, Calif.

Filed Apr. 5, 1994, Ser. No. 222,972

Int. Cl.⁶ G11B *7/095*

U.S. Cl. 369—44.29 **3 Claims**

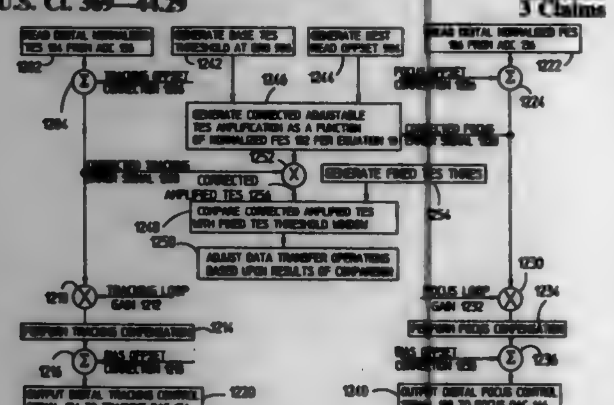

1. An off track detection system for controlling tracking of a laser beam relative to a track in an optical disk having servo tracks at which data is written to and read from, comprising:

a laser source for generating a laser beam to write, erase, and read digital information at individual bit positions on the optical disk, said laser beam focused on the optical disk by an objective lens;

an optical detector positioned to detect the laser beam after reflection from the optical disk and configured to generate a plurality of detector signals related to a radial distribution of energy of the laser beam after reflection;

a tracking servo system configured to drive and position said objective lens about a tracking axis so as to center said laser beam on a desired servo track;

a focus servo system configured to drive and position said objective lens about a focus axis to attain a zero focus error point wherein said laser beam is optimally focused onto the optical disk at said zero focus error point;

means, responsive to said detector signals, for generating a sinusoidal tracking error signal having a polarity and magnitude representative of a direction and distance, respectively, that the laser beam is displaced from a center of a desired servo track, a focus error signal having a polarity and magnitude representative of a direction and distance, respectively, that said objective lens is displaced from a proper focus position;

automatic gain control circuitry coupled to a summing circuit, configured to divide said sinusoidal tracking error signal and said focus error signal by a servo sum signal to thereby obtain a normalized tracking error signal and a normalized focus error signal, wherein said sinusoidal tracking error signal, said focus error signal, and said servo sum signal are received from said summing circuit, said normalized tracking error signal and said normalized focus error signal are isolated from media reflectivity variations, and said normalized tracking error signal is maximum when said objective lens is positioned at said zero focus error point; and

processing means for generating a tracking error signal threshold having an amplitude that varies according to said focus error signal, and for comparing said normalized tracking error signal with said tracking error signal threshold to thereby determine whether the laser beam is displaced from the servo track, said tracking error signal threshold representing substantially the same percentage of a maximum tracking error signal regardless of said position of said objective lens along said focus axis.

5,703,849

TRACKING SERVO CORRECTION CONTROL CIRCUIT

Hidenobu Noda, Kanagawa, Japan, assignor to Sony Corporation, Japan

Filed Apr. 19, 1996, Ser. No. 634,767

Claims priority, application Japan, Apr. 28, 1995, 7-106496

Int. Cl.⁶ G11B *7/095*

U.S. Cl. 369—44.29 **12 Claims**

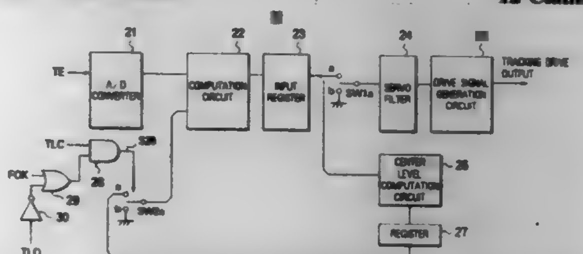

1. A tracking servo circuit which obtains a drive output for correction of the position of the light irradiated on the surface of a recording medium by a tracking error signal obtained in accordance with the level of reflection of light irradiated to the surface of the medium, comprising:

a first circuit which obtains a predetermined level of the tracking error signal obtained before the servo-on state is established from the start of driving;

a register which holds said predetermined level of tracking error signal obtained by said first circuit;

a second circuit which corrects said predetermined level of the tracking error signal obtained in the servo-on state based on said predetermined level held in said register; and

a third circuit which stops the correction operation of said second circuit when a reflection light from the surface of the medium can no longer be obtained at the time of the servo-on state.

5,703,850

DATA RETRIEVAL SYSTEM AND METHOD WITHIN A CONSTANT ANGULAR VELOCITY CD-ROM

Takeo Wada, Tokyo, Japan, assignor to Cirrus Logic, Inc., Freemont, Calif.

Filed Jun. 18, 1996, Ser. No. 666,776

Int. Cl.⁶ G11B *5/09*

U.S. Cl. 369—47 **18 Claims**

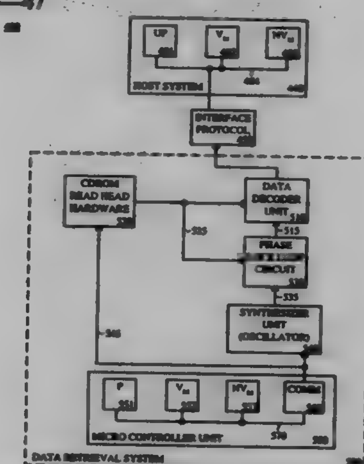

1. An information retrieval system comprising:

a read head for optically reading encoded information of off an optical disk and for supplying said encoded information, said encoded information read and supplied at variable data rates depending on track positions of said read head;

a microcontroller for controlling said track positions of said read head and for determining variable center frequencies based on said track positions;

a programmable oscillator coupled to said microcontroller for generating said variable center frequencies determined by said microcontroller;

a narrow capture band phase lock loop circuit coupled to receive said variable center frequencies from said programmable oscillator and coupled to receive said encoded information, said narrow capture band phase lock loop circuit for extracting read reference clock signals from said encoded information; and

a data decoder circuit coupled to receive said encoded information and coupled to receive said read reference clock signals, said data decoder circuit for generating decoded information based on said encoded information and said read reference clock signals.

5,703,851

CLOCK REPRODUCING DEVICE UTILIZING A FREQUENCY OF WOBBLE GROOVE INFORMATION

Ryo Ando, Tokyo, Japan, assignor to Sony Corporation, Tokyo, Japan

Division of Ser. No. 528,353, Sep. 14, 1995. This application Oct. 8, 1996, Ser. No. 727,032

Claims priority, application Japan, Sep. 20, 1994, P06-250210; Sep. 20, 1994, P06-250212

Int. Cl.⁶ G11B *5/09*

U.S. Cl. 369—47 **1 Claim**

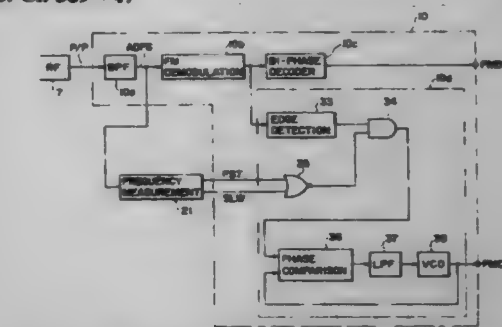

1. A clock reproducing device for reproducing a clock about information of grooves read out of a disc-like recording medium having some recording tracks formed therein by grooves wobbled in response to their absolute positional information comprising:

groove information reading means for reading groove information from the disc-like recording medium; frequency measuring means for measuring a frequency about the groove information extracted by said groove information reading means;

clock generating means for feeding a signal demodulated from groove information extracted by said groove information reading means into a PLL circuit so as to reproduce a clock; and

control means for controlling a PLL operation in said clock generating means in response to the result of measurement performed by said frequency measuring means.

5,703,852

OPTICAL DISK REPRODUCING APPARATUS HAVING A COSINE EQUALIZER WITH BOOSTED FREQUENCY CHARACTERISTICS

Eiji Kumagai, Kanagawa, Japan, assignor to Sony Corporation, Tokyo, Japan

Filed Apr. 3, 1996, Ser. No. 627,139

Claims priority, application Japan, Apr. 6, 1995, 7-081444

Int. Cl.⁶ G11B *5/09;5/02;5/035*

U.S. Cl. 369—48 **7 Claims**

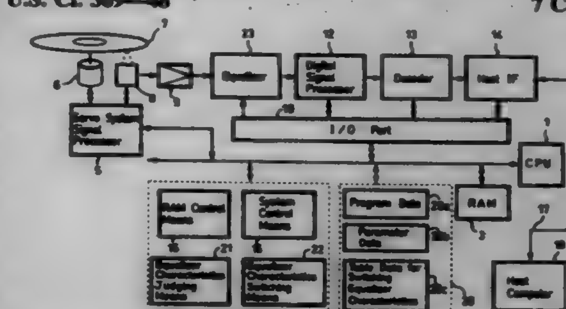

1. An optical disk apparatus comprising:

an optical pickup for reproducing an RF signal from an optical recording medium on which modulated data generated by modulating information data by a modulation process with a prescribed shortest data length are recorded;

a cosine equalizer having frequency characteristics including a central boosting frequency which is about twice the frequency of the RF signal reproduced from the recorded data with the shortest data length, for thereby equalizing a waveform of the RF signal; and

modulated data generating means connected to said cosine equalizer for generating the modulated data from said RF signal.

5,703,853

RECORDING MEDIUM AS WELL AS RECORDING APPARATUS AND REPRODUCTION APPARATUS FOR THE SAME

Toshihiro Horigome, and Seiji Kobayashi, both of Kanagawa, Japan, assignors to Sony Corporation, Tokyo, Japan

Division of Ser. No. 507,158, Jul. 26, 1995, abandoned. This application Oct. 30, 1996, Ser. No. 739,939

Claims priority, application Japan, Jul. 29, 1994, 6-177894

Int. Cl.[6] G11B *7/00*

U.S. Cl. 369—48 5 Claims

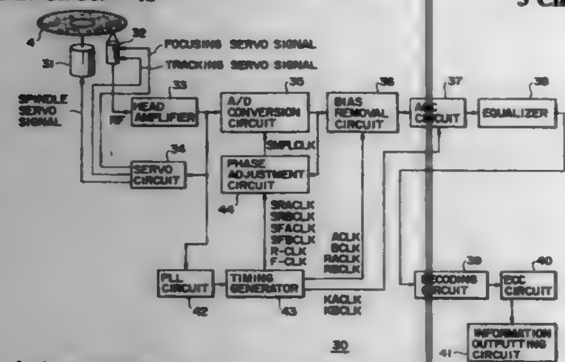

1. A reproduction apparatus for reproducing data recorded on a recording medium such that positions of a leading edge and a trailing edge of each of pits formed at predetermined periods are shifted to individually selected ones of predetermined stepwise positions from a respective reference position in accordance with recording data to record the recording data on the recording medium, the thus recorded data being read by sampling a reproduction signal reproduced from the recording medium in synchronism with a sampling clock signal, the recording medium having formed periodically thereon first areas in which the recording data are recorded and second areas in which a reference signal for reading the recording data recorded in the first areas is recorded, the reference signal including a phase reference signal which serves as a reference for fine adjustment of a phase of the sampling clock signal, comprising:

reproduction means for reproducing the recording medium;

sampling clock production means for producing the sampling clock signal in response to the reproduction signal reproduced from the recording medium by said reproduction means;

sampling means for sampling the reproduction signal from the recording medium in response to the sampling clock signal; and

phase adjustment means for finely adjusting a phase of the sampling clock signal in response to the phase reference signal contained in the reproduction signal sampled by said sampling means.

5,703,854

DISC RECORDING/REPRODUCTION APPARATUS AND METHOD FOR RESETTING AN ADDRESS CONTROL CIRCUIT TO MAXIMIZE AN ADDRESS MARGIN OF THE MEMORY

Hirokazu Kuroda, and Ryo Ando, both of Tokyo, Japan, assignors to Sony Corporation, Tokyo, Japan

Filed Jun. 21, 1995, Ser. No. 493,368

Claims priority, application Japan, Jun. 29, 1994, 6-170026

Int. Cl.[6] G11B *7/00*

U.S. Cl. 369—50 14 Claims

1. A disc recording/reproduction apparatus for recording and reproducing data onto and from a disc on which control information is written in advance, comprising:

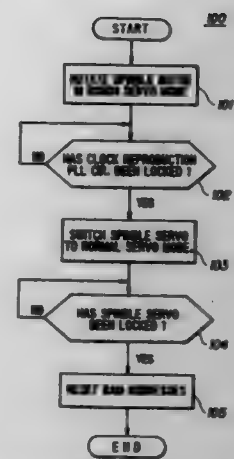

a spindle servo circuit for controlling, based on the control information taken from the disc, rotation of a spindle motor that drives the disc;

a memory to and from which reproduction digital data is written and read;

an address control circuit for generating a write address of the memory by counting clocks synchronized with the reproduction digital data by a first counter, and for generating a read address of the memory by counting reference clocks by a second counter;

a jitter correction circuit for producing jitter-removed reproduction digital data from the memory; and

reset means for resetting the address control circuit so as to maximize an address margin of the memory when the spindle servo circuit changes from an unlocked state to a locked state.

5,703,855

OPTICAL DISK APPARATUS AND RECORDING AND READING METHOD FOR AN OPTICAL DISK USING THE SAME

Fumiyoshi Kirino, Suginami-ku; Tsuyoshi Toda, Kodaira; Horishi Ide, Kodaira; Hisataka Sugiyama, Kodaira; Atsushi Saito, Ichikawa; Hiroyuki Tsuchinaga; Takeshi Maeda, both of Kokubunji; Fumio Kugiya, Hachiouji; Toshimitsu Kaku, Sagamihara; Seiichi Mita, Tsukui-gun; Kazuo Shigematsu, Kitakatsushika-gun, and Yasuhide Ouchi, Odawara, all of Japan, assignors to Hitachi, Ltd., Tokyo, Japan

Filed Mar. 30, 1994, Ser. No. 220,428

Claims priority, application Japan, Apr. 6, 1993, 5-079340; Jul. 14, 1993, 5-174357; Aug. 5, 1993, 5-194630

Int. Cl.[6] G11B *7/00*

U.S. Cl. 369—54 7 Claims

1. A recording and reading method for an optical disk which is an optical information recording and reading method for recording and reading information by using at least an optical disk which is an optical recording medium which can be loaded or unloaded and an optical head for reading the information recorded on said optical disk, wherein the area where a special recording pattern of said optical disk is recorded is read when said optical disk is loaded, and a most suitable tap coefficient is obtained by an automatic equalizer consisting of a transversal filter of at least three taps, and an error signal value in proportion to the relative tilt between the optical disk and optical head is calculated on the basis of said tap coefficient, and the tilt of the optical head is mechanically adjusted so that said error signal value becomes almost zero (0), and the waveform distortion of a reading signal which is generated by a coma aberration generated by the tilt between the optical disk and optical head is removed.

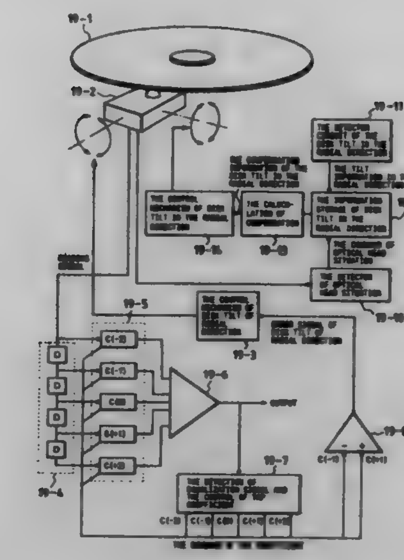

5,703,856

OPTICAL HEAD AND OPTICAL DATA RECORDING AND REPRODUCING APPARATUS HAVING THE SAME

Hideki Hayashi, Katano; Sadao Mizuno, Ibaraki; Noboru Ito, Hirakata; Kenichiro Urairi, Yawata, and Yoshiaki Komma, Kyoto, all of Japan, assignors to Matsushita Electric Industrial Co., Ltd., Kadoma, Japan

Filed Oct. 17, 1994, Ser. No. 324,262

Claims priority, application Japan, Aug. 12, 1994, 6-190462

Int. Cl.[6] G11B *7/00*

U.S. Cl. 369—54 42 Claims

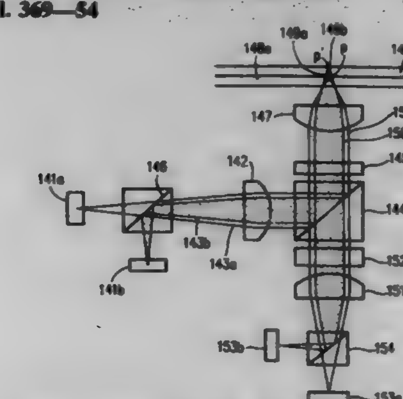

1. An optical head for reproducing data from first and second optical disks which are different from each other in at least one of a base material thickness and an available wavelength, comprising:

a first light source for emitting a first light beam, the first light beam being used for reproducing data from the first optical disk;

an optical system designed to converge the first light beam onto the first optical disk in accordance with a base material thickness and an available wavelength of the first optical disk; and

a second light source for emitting a second light beam, the second light beam being used for reproducing data from the second optical disk,

wherein an optical path length between the second light source and the optical system is different from an optical path length between the first light source and the optical system, the difference between the optical path length from the first light source to the optical system and the optical path length from the second light source to the optical system compensating a wave-front aberration due to the differences in the at least one of the base material thickness and the available wavelength of the first and the second optical disks.

and wherein the optical system converges the second light beam onto the second optical disk.

5,703,857

CARTRIDGE-LOADING APPARATUS WITH IMPROVED CARTRIDGE RECEIVER

Marvin B. Davis, and Kent Murphy, both of Colorado Springs, Colo., assignors to Discovision Associates, Irvine, Calif.

Division of Ser. No. 296,794, Aug. 25, 1994. This application Jun. 7, 1995, Ser. No. 477,050

Int. Cl.[6] G11B *17/04*

U.S. Cl. 369—77.2 11 Claims

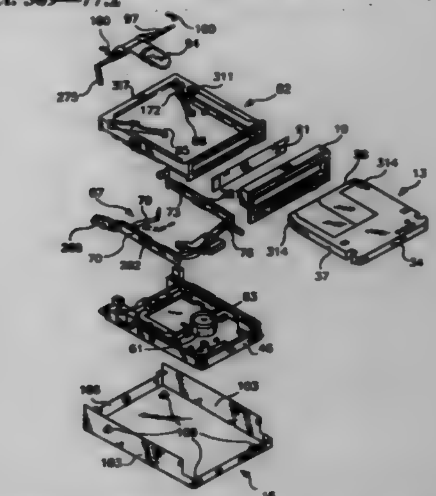

1. A cartridge loading apparatus for use with a disk drive having a cartridge loading end and a remote end, said cartridge loading apparatus comprising:

a base plate having a first slider channel and a second slider channel;

at least one door link rotatably attached to said base plate, said at least one door link having a free contact end;

a first slider slidably contained within said first slider channel, said first slider having a forward end adjacent the cartridge loading end of the disk drive and a remote end adjacent the remote end of the disk drive, said first slider having only one S-shaped slot formed herein;

a second slider slidably contained within said second slider channel, said second slider having a forward end adjacent the cartridge loading end of the disk drive and a remote end adjacent the remote end of the disk drive, said second slider having only one S-shaped slot formed herein;

a tiller having a first end and a second end, said first end of said tiller being swingably associated with said forward end of said first slider, and said second end of said tiller being swingably associated with said forward end of said second slider, so that a first rotation of said tiller in a first direction about a tiller axis drives said first slider toward the cartridge loading end of the disk drive while driving said second slider toward the remote end of the disk drive, and a second rotation of said tiller in a second direction about said tiller axis drives said first slider toward the remote end of the disk drive while driving said second slider toward the cartridge loading end of the disk drive;

a cartridge receiver for receiving a respective cartridge containing a disk with a central hub and at least one shutter door covering the disk, said cartridge receiver being linked to each of said first and second sliders by the corresponding only one S-shaped slot formed respectively herein and moveable between an upper position and a lower position along a non-horizontal path when said sliders are driven by said tiller;

a cam operatively associated with said tiller for rotating said tiller about said tiller axis so that when said first and second sliders move said cartridge receiver between said upper position and said lower position, said cartridge receiver, respective cartridge, and disk move along said non-horizontal path so that the central hub is caused to be inclined relative to a spindle magnet, said at least one door link being aligned to engage the shutter door when said respective cartridge is inclined and moving along said non-horizontal path, said inclined positioning of the disk thereby reducing the force

needed to remove the central hub from the spindle magnet while the disk is moved between said upper and lower positions.

5,703,858

SYSTEM FOR ENCODING A GLASS MASTER TO ENABLE DETECTION OF A COUNTERFEIT OPTICAL CD-ROM

Michael L. Mitchell; Barry Alan Fite, both of Terre Haute, Ind.; Akiya Saito, Odaware, Japan, and Anthony C. New, Terre Haute, Ind., assignors to Sony Corporation, Tokyo, Japan, and Digital Audio Disc Corporation, Terre Haute, Ind.

Continuation of Ser. No. 376,277, Jan. 23, 1995, abandoned. This application Oct. 21, 1996, Ser. No. 735,377

Int. Cl.^{6} G11B *7/00*

U.S. Cl. 369—58 **19 Claims**

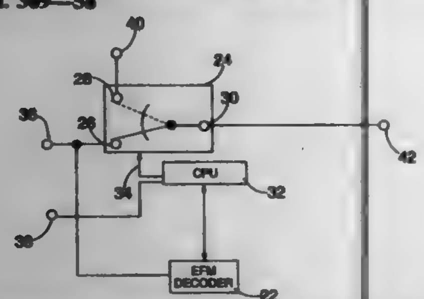

1. A device for forming a glass master to inhibit manufacture of a counterfeit optical CD-ROM, wherein said device is used in conjunction with a mastering system having an input source for providing data to be recorded on said glass master and a recorder for forming said glass master in accordance with a received signal, comprising:

a signal source for providing a random high frequency signal for forming a first defect in said glass master;

a switch for electrically connecting said recorder to said signal source; and

a central processor unit (CPU) for controlling said switch to electrically connect said signal source to said recorder to form said first defect at a selected address of said glass master wherein said first defect causes generation of a predetermined error signal in a CD-ROM manufactured from said glass master.

5,703,859

DIGITAL VIDEO COPY PROTECTION SYSTEM

Katsumi Tahara; Hideki Koyanagi; Yoichi Yagasaki, and Yasushi Fujinami, all of Kanagawa, Japan, assignors to Sony Corporation, Tokyo, Japan

Filed Aug. 29, 1996, Ser. No. 705,306

Claims priority, application Japan, Sep. 1, 1995, 7-225038

Int. Cl.^{6} G11B *3/64*

U.S. Cl. 369—84 **30 Claims**

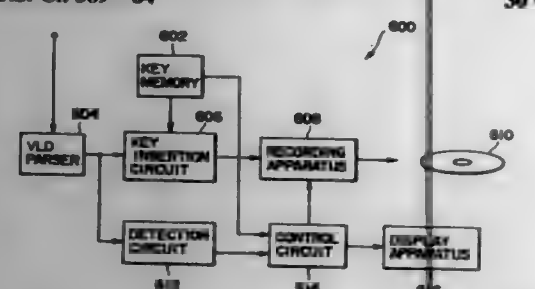

1. A formatting apparatus for the authentication and mass duplication of an information signal recorded on a storage medium, said apparatus comprising:

first receiving means for receiving said information signal;

second receiving means for receiving a key signal;

key signal detection means, coupled to said first receiving means and to said second receiving means, for analyzing said information signal to detect whether or not a copy of said key signal is present in said information signal;

key insertion means, coupled to said first receiving means and to said second receiving means, responsive to the detection by said key signal detection means that a copy of said key signal is not present in said information signal for selectively inserting into a portion of said information signal not normally allocated for copy protection information a copy of said key signal to produce a modified information signal;

recording means, coupled to said key signal detection means and to said key insertion means, for recording said modified information signal if a copy of said key signal is not detected in said information signal; and

means for inhibiting the recording of said information signal if a copy of said key signal is detected in said information signal.

5,703,860

OPTICAL IMAGING RECORDING SYSTEM FOR PERFORMING IMAGE RECORDING BY FOCUSING MODULATED LIGHT BEAMS

Hideki Fukunaga; Shoji Yamaguchi, and Takashi Nomiyama, all of Nakai-machi, Japan, assignors to Fuji Xerox Co., Ltd., Tokyo, Japan

Filed Nov. 8, 1996, Ser. No. 745,326

Claims priority, application Japan, Dec. 28, 1995, 7-344029

Int. Cl.^{6} G03G *15/04;* **G11B** *7/00*

U.S. Cl. 369—102 **16 Claims**

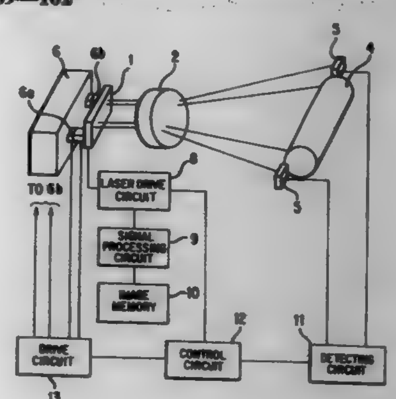

1. An optical beam recording device for performing image recording by focusing a plurality of light beams modulated according to an image signal through a focusing optical system, comprising:

a light source having a plurality of arrayed light emitting portions for emitting said plurality of light beams and a detecting light beam;

a photosensitive member receiving the plurality of light beams to form an electrostatic latent image on a surface of the photosensitive member;

light detecting means located at a given position for detecting the detecting light beam; and

control means for controlling a focused condition of said plurality of light beams on said photosensitive member according to a result of detection of said detecting light beam by said light detecting means.

5,703,861

INTEGRATED CONFOCAL OPTICAL PICK-UP HEAD WITH A HOLOGRAM AND A POLARIZER MOUNTED ON EACH SIDE OF A TRANSPARENT HEAT SINK

Osamu Matsuda, Kanagawa, Japan, assignor to Sony Corporation, Tokyo, Japan

Filed Feb. 26, 1996, Ser. No. 605,842

Claims priority, application Japan, Feb. 24, 1995, 7-037183

Int. Cl.^{6} H01S *3/18;* **G11B** *7/135*

U.S. Cl. 369—110 **7 Claims**

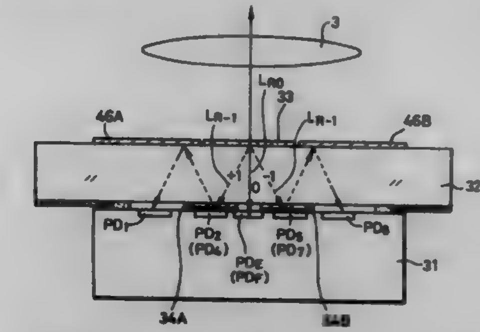

1. An optical head comprising:

a light-emitting element having a top surface disposed on a substrate for emitting light toward an irradiated recording medium;

a transparent heat sink coupled to said light-emitting element and attached on said top surface;

a hologram device mounted on said transparent heat sink for diffracting light returning from the irradiated medium;

a polarizer supported on said transparent heat sink for polarizing the light diffracted by said hologram device to produce first polarized light that has passed through said polarizer and second polarized light that has been reflected by said polarizer;

a reflecting film attached on said transparent heat sink, while film reflects polarized light which travels inside said transparent heat sink;

a plurality of light-detecting elements including a first light-detecting element disposed on said substrate for detecting said first polarized light, and a second light-detecting element disposed on said substrate for detecting said second polarized light; and

means for generating a magneto optical signal as the difference between the intensities of the first and second polarized lights detected respectively by said first and second light-detecting elements.

5,703,862

DUAL FOCUS OBJECTIVE LENS WITH TWO CURVATURES FOR FOCUSSING LIGHT ON TWO DIFFERENT KINDS OF DISKS WITH DIFFERENT THICKNESSES

Chul-woo Lee, and Jang-hoon Yoo, both of Seoul, Rep. of Korea, assignors to Samsung Electronics Co., Ltd., Suwon, Rep. of Korea

Filed Dec. 26, 1995, Ser. No. 587,783

Claims priority, application Rep. of Korea, Jun. 7, 1995, 95-14928

Int. Cl.^{6} G11B *7/00*

U.S. Cl. 369—112 **4 Claims**

1. A dual focus objective lens with two curvature units for an optical pickup for focussing an incident light beam so as to form a light spot on a disk, said disk being one of two different thicknesses, wherein at least one of a light-receiving plane and a light-emitting plane of said dual focus objective lens comprises a

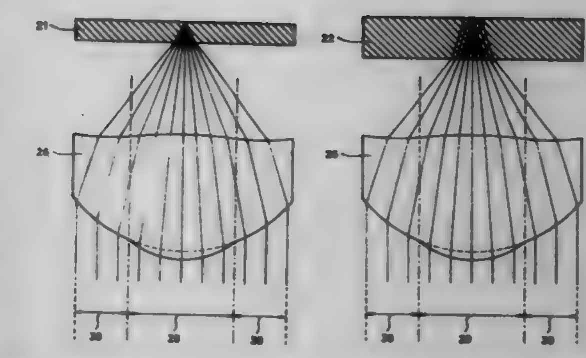

first curvature unit and a second curvature unit whose curvature radii are different from each other.

5,703,863

OPTICAL DEVICE WHICH DETECTS REFLECTED LIGHT WITH A PUSH-PULL METHOD WITHOUT DIVIDING THE REFLECTED LIGHT

Masato Doi; Hironobu Narui, both of Kanagawa, and Takashi Nakao, Saitama, all of Japan, assignors to Sony Corporation, Tokyo, Japan

Filed Feb. 22, 1996, Ser. No. 603,872

Claims priority, application Japan, Feb. 23, 1995, 7-035528

Int. Cl.^{6} G11B *7/00*

U.S. Cl. 369—112 **6 Claims**

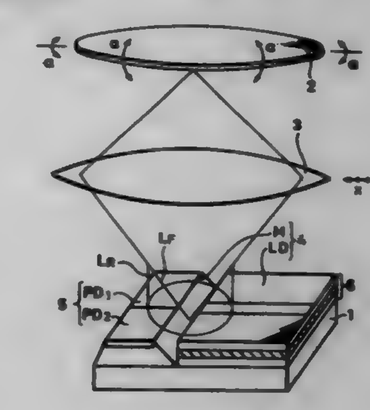

10

5. An optical device, comprising:

a laser which emits a light beam and which has a mirror which reflects the light beam from the laser onto an optical recording medium, both the laser and the mirror being formed on a substrate;

a photodiode receptor which receives light reflected from the optical recording medium; and

a lens which focuses the light from the mirror onto the optical recording medium and which focuses the light reflected from the optical recording medium onto the photodiode receptor,

wherein the light reflected from the optical recording medium is received by the photodiode receptor as undivided light, and

wherein the photodiode receptor is divided into at least two portions, each of which detects receipt of the light reflected from the optical recording medium, the receptor comparing the light received by the at least two portions to detect a signal.

5,703,864
PICKUP DEVICE FOR OTPICAL DISK
Takahiro Miyagi; Shigeru Takaya, and Yoshifumi Masunaga, all of Tokorozawa, Japan, assignors to Pioneer Electronic Corporation, Tokyo-to, Japan
Filed Mar. 29, 1996, Ser. No. 623,821
Claims priority, application Japan, Mar. 30, 1995, 7-097941
Int. Cl.^{6} G11B *7/12*
U.S. Cl. 369—112 **20 Claims**

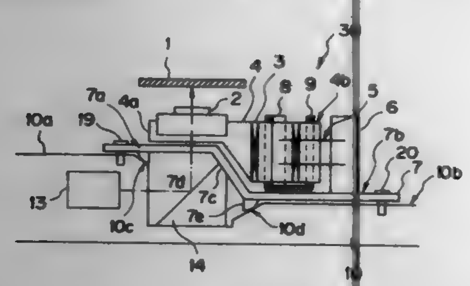

1. An optical pickup device comprising:
an objective lens assembly including an objective lens facing a surface of an optical disk;
an actuator base supporting the objective lens to be movable; and
a body in which an optical element is accommodated and from which light beam is projected towards the objective lens, said actuator base being supported by said body to be slidable,
wherein said actuator base has a plate-like bent structure with a first flat portion positioned in a vicinity of the optical disk surface and a second flat portion apart from the optical disk surface, said first and second flat portions being formed with first and second protruded pieces having spherical end surfaces, respectively, said body being formed with first and second receiving portions against which said first and second protruded pieces abut, respectively, and
wherein an inclination of the objective lens is adjustable by relatively sliding said first and second protruded pieces with respect to said first and second receiving portions in abutting manner.

5,703,865
METHOD AND APPARATUS FOR MAGNETO-OPTICAL RECORDING AND READING USING OPTIMIZED LASER POWERS
Ann Guo, Fremont, Calif., assignor to Maxoptix Corporation, Fremont, Calif.
Filed Nov. 18, 1996, Ser. No. 751,712
Int. Cl.^{6} G11B *7/00*
U.S. Cl. 369—116 **25 Claims**

1. A magneto-optical disk drive, comprising:
a drive controller that controls operation of a laser source and a disk drive mechanism, the drive controller comprising:
a microprocessor; and
a memory subsystem coupled to the microprocessor comprising a memory device that stores information used by the programs during operation of the recording apparatus, the information comprising:
an identifier that matches an identifier of a magnetic medium;
a set of constant values characteristic of physical properties of the magnetic medium comprising constant values denoted by b, k, s, c, α, β and δ; and
a set of equations that determine optimum write powers as functions of linear velocity, v, of the magnetic medium, comprising:
$Ph(v)=hv^{\alpha}$, where Ph(v) is a preheat power;
$Pk(v)=kv^{\beta}$, where Pk(v) is a peak power;

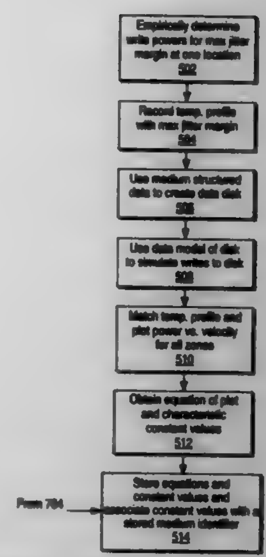

$Pm(v)=Pk(v)+s$, where Pm(v) is a maintenance power; and
$Pc(v)=cv^{\delta}$, where Pc(v) is a cooling power.

5,703,866
DISK-CHANGING DEVICE WITH RECIPROCATING BACK-SWITCHING STEP CAM PLATES
Hideki Hayashi, and Yuji Teraguchi, both of Tokyo, Japan, assignors to Clarion co, Saitame-Ken, Japan
Filed Jun. 7, 1995, Ser. No. 475,075
Claims priority, application Japan, Jun. 24, 1994, 6-164836; Jun. 24, 1994, 6-164837
Int. Cl.^{6} G11B *17/10*
U.S. Cl. 369—192 **13 Claims**

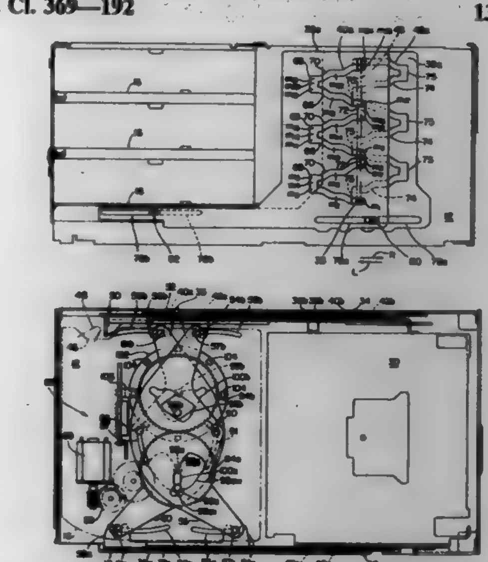

1. A disk-changing device comprising:
a housing means having a plurality of housing positions for housing disk-shaped recording media in each housing position;
a loading means for selecting and loading a housed recording medium from a desired housing position in the housing means;
a plurality of plates which move the loading means between each of the housing positions, a zigzag shaped cam is formed in each plate to cooperatively provide a backswitching stepped form;
pin-shaped cam followers are provided on the loading means and inserted in the zigzag shaped cams; and

a movement means for reciprocally moving the plurality of plates with a predetermined timing with the result that it moves the loading means in a direction perpendicular to a direction of reciprocal movement of the plurality of plates, the cam followers moving along the zigzag shaped cam in a unilateral direction perpendicular to the reciprocating movement of the plurality of plates, each of the zigzag shaped cams repetitively reversing direction as it extends across its plate and providing oppositely inclined sloping surfaces to sequentially drive the pin-shaped cam followers in a unilateral direction, whereby the pin-shaped cam follower is driven to move the loading means in a direction perpendicular to the direction of the reciprocating movement of the zigzag shaped cams, whereby recording members are stored at predetermined positions along this perpendicular direction.

5,703,867
OPTICAL RECORDING MEDIUM HAVING A DUMMY AREA AT LEADING AND/OR TRAILING POSITIONS OF RECORDING AREA
Yasushi Miyauchi, Akishima; Motoyasu Terao, Tokyo; Akemi Hirotsune, Higashimurayama; Hiroyuki Minemura, and Harukazu Miyamoto, both of Kodaira, all of Japan, assignors to Hitachi, Ltd., Tokyo, and Hitachi Maxell, Ltd., Oosaka, both of Japan
Filed Jul. 10, 1996, Ser. No. 678,070
Claims priority, application Japan, Jul. 21, 1995, 7-185294; Dec. 13, 1995, 7-324200
Int. Cl.^{6} G11B *7/24*
U.S. Cl. 369—275.3 **13 Claims**

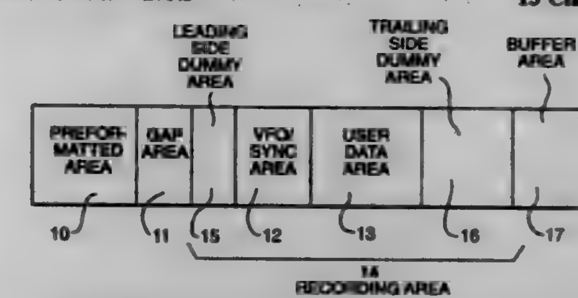

1. An information recording medium on which information is recorded in a recording area by means of energy beam irradiation, comprising:
a pattern of a dummy signal added to at least the trailing side of the recording signal which is recorded in the recording area, wherein a postamble is added between user data and the trailing side dummy signal, and wherein the postamble has a characteristic that depends upon whether the end of the user data is a mark or a space.

5,703,868
OPTICAL INFORMATION RECORDING MEDIUM HAVING DISCERNIBLE OBVERSE AND REVERSE SIDES
Masakazu Kobayashi, Yokohama, and Yoshikazu Kato, Kawasaki, both of Japan, assignors to Nippon Columbia Co., Ltd., Tokyo, Japan
Filed Oct. 9, 1996, Ser. No. 728,493
Claims priority, application Japan, Dec. 8, 1995, 7-345573
Int. Cl.^{6} G11B *7/24*
U.S. Cl. 369—286 **24 Claims**

1. A plate-shaped optical information recording medium on which information is recorded and from which the information is optically reproduced by being irradiated with a reproduction laser beam and detecting the reproduction laser beam reflected from the medium, comprising:

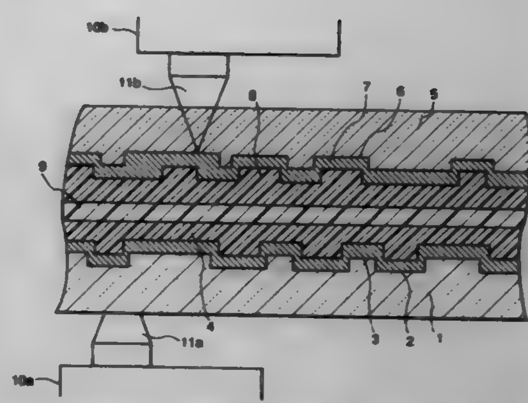

a first transmission portion including a first substrate through which light incident to an obverse surface side of said optical information recording medium is transmitted;
a second transmission portion including a second substrate through which light incident to a reverse surface side of said optical information recording medium is transmitted; and
a reflection portion which is provided between said first transmission portion and said second transmission portion and adapted to reflect the light transmitted through said first transmission portion and said second transmission portion, said first transmission portion and said second transmission portion having different transmission spectra in a visible region to enable a user to visually discriminate between said obverse and reverse sides.

5,703,869
METHOD AND APPARATUS OF MULTIPLEXING DIGITAL SIGNAL
Akihiko Takase, Tokyo, and Shirou Tanabe, Hachioji, both of Japan, assigners to Hitachi Ltd., Tokyo, Japan
Continuation of Ser. No. 82,015, Jun. 25, 1993, Pat. No. 5,461,626, which is a continuation of Ser. No. 497,626, Mar. 23, 1990, abandoned. This application Jul. 19, 1995, Ser. No. 504,782
Claims priority, application Japan, Mar. 27, 1989, 1-071714
Int. Cl.^{6} H04J *3/22*
U.S. Cl. 370—229 **5 Claims**

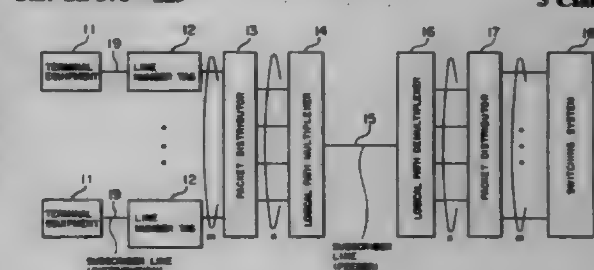

1. A packet signal transmission system for transmitting a plurality of packets, comprising:
at least M first transmission lines having a first transmission rate (A), wherein M is an integer;
at least N first intermediate lines, each of said first intermediate lines having a transmission rate which is less than said first transmission rate (A), wherein N>M;
first means connected to said first transmission lines for distributing input packets successively received from each of said first transmission lines to said first intermediate lines in accordance with an order of arrival of said input packets so that each of said first intermediate lines carries a packet stream which includes input packets received from said first transmission lines; and
second means for multiplexing a plurality of packet streams received from said first intermediate lines to one of a plurality of second transmission lines so that each of said packet

streams received from said intermediate lines is carried through time slots periodically defined on the one of said second transmission lines;

said first and second means being constructed such that a transmission capacity (MXA) of said first transmission lines is equal to or smaller than a sum of transmission capacities of said second transmission lines.

5,703,870

CONGESTION CONTROL METHOD

Tutomu Murase, Tokyo, Japan, assignor to NEC Corporation, Tokyo, Japan

Filed Nov. 14, 1995, Ser. No. 557,554

Claims priority, application Japan, Nov. 14, 1994, 6-278917

Int. Cl.[6] H04L *12/00*

U.S. Cl. 370—232 **7 Claims**

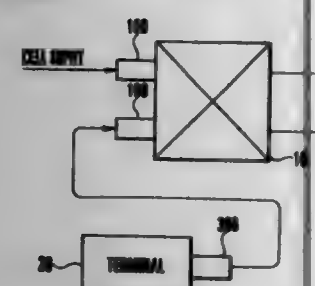

1. A congestion control method for a system having a first network of one congestion control unit representing a subset of a switching network constituted by a set of switching nodes connected to each other and a second network which serves as a subset of the switching network and does not have a switching node common to the first network, thereby controlling congestion of the first and second networks, comprising the steps of:

classifying traffic into first traffic generated in the first network and reaching a target switching node of the first network through a switching node in the first network, second traffic having the switching node of the first network as a start point and directed toward the second network, third traffic having a switching node in the second network as a start point and transmitted through a switching node in the second network and a switching node in the first network, and fourth traffic which does not correspond to any one of the first traffic, the second traffic, and the third traffic; and

upon occurrence of congestion in the first network, limiting traffic flow amounts and traffic rates of the first traffic and the second traffic in the first network.

5,703,871

FACILITIES DATA LINK HANDLER IN A PERFORMANCE MONITORING AND TEST SYSTEM

Kevin Pope, Poway, and Paul R. Hartmann, Escondido, both of Calif., assignors to Applied Digital Access, San Diego, Calif.

Division of Ser. No. 118,443, Sep. 7, 1993, which is a continuation-in-part of Ser. No. 862,470, Apr. 2, 1992, abandoned. This application May 26, 1995, Ser. No. 451,172

Int. Cl.[6] H04J *3/14*

U.S. Cl. 370—248 **11 Claims**

1. A Facilities Data Link handler, comprising:

an input register for storing at least a portion of a DS1 FDL packet;

a counter for counting bits stored in the register; and

a circuit, receiving the stored portion and count, capable of assembling a plurality of DS1 FDL packet portions into an

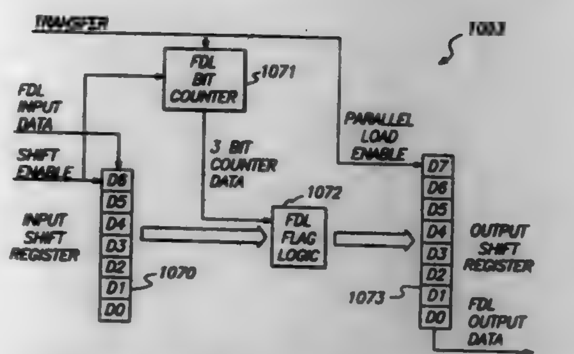

FDL packet, wherein FDL packets from a plurality of asynchronous DS1 signals are assembled.

5,703,872

INTELLIGENT CONCENTRATOR FOR MULTIPLE SPEED DATA COMMUNICATIONS SYSTEMS

Andrew Keith Boggs; Quy N. Hoang, both of Raleigh; Joe Jacobs, Chapel Hill; John Mark Mullen, Wake Forest; Challis Purrington, Raleigh, and Laura A. Weaver, Durham, all of N.C., assignors to International Business Machines Corporation, Armonk, N.Y.

Continuation of Ser. No. 263,704, Jun. 22, 1994, Pat. No. 5,530,696. This application Feb. 8, 1996, Ser. No. 598,293

Int. Cl.[6] H04L *12/42*

U.S. Cl. 370—252 **10 Claims**

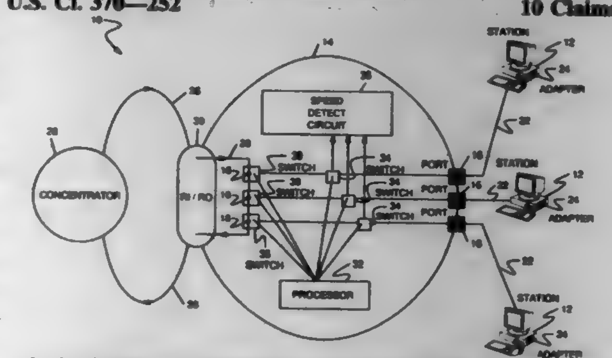

1. An intelligent multistation access unit with a transmission speed detection circuit for determining the data transmission speed of an attached device attempting to gain access to a node of a digital data communications network, comprising:

a speed detect circuit which indicates the data transmission speed of the attached device;

a switching circuit which directs IDLE signals for the attached device to the speed detect circuit until switched to allow the attached device access to the network node; and

a processor that controls the switching circuit, and which permits the attached device access to the node if the transmission speed determined from said IDLE signals matches the transmission rate of the network.

5,703,873

METHOD AND APPARATUS FOR SYNCHRONIZING SUBSCRIBER EQUIPMENT WITH BASE STATIONS IN A CDMA RADIO NETWORK

Tero Ojanpera, and Ilkka Keskitalo, both of Oulu, Finland, assignors to Nokia Telecommunications Oy, Espoo, Finland, and Nokia Mobile Phones Ltd., Salo, Finland

Filed May 30, 1995, Ser. No. 453,242

Claims priority, application Finland, May 30, 1994, 942524

Int. Cl.[6] H04B *7/26;* **H04J** *13/02*

U.S. Cl. 370—332 **11 Claims**

1. A method for synchronizing each of a plurality of units of subscriber equipment with transmission of particular ones of a

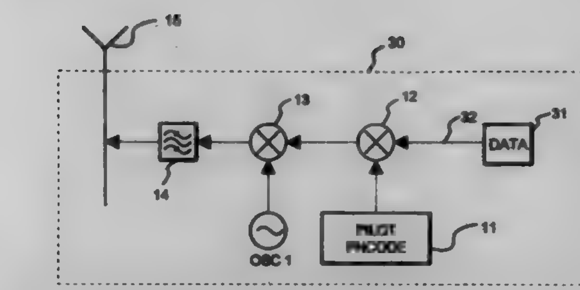

plurality of base stations, in a digital cellular radio network utilizing CDMA, and having, in each cell of a plurality of cells of said network, at least one base station, each such base station having a respective coverage area and arranged to communicate with subscriber equipment within the respective said coverage area, each said base station being arranged for transmitting traffic for reception by subscriber equipment located within its respective said coverage area using a given frequency band and, for each subscriber equipment, a respective first spreading code which is unique to each respective subscriber equipment,

(a) each said base station transmitting a respective data-modulated pilot signal for reception by all subscriber equipment located within its respective said coverage area, using said given frequency band and a respective second spreading code which is different from each said first spreading code; and

(b) each subscriber equipment automatically exploiting at least one said pilot signal for at least one of:

(i) determining which one of said base stations to become presently served by, as a presently serving base station, on the basis of relative signal strength and selecting that base station; and

(ii) achieving code and frame synchronization with the presently serving base station selected in step (b) (i);

step (a) including data-modulating each said pilot signal to provide a respective data-modulated pilot signal, by inverting at least one symbol in at least one characteristic location in at least certain instances of transmitting of each said data-modulated pilot signal using the respective said second spreading code.

5,703,874

BROADBAND CDMA OVERLAY SYSTEM AND METHOD

Donald L. Schilling, Sands Point, N.Y., assignor to InterDigital Technology Corporation, Wilmington, Del.

Continuation of Ser. No. 983,070, Nov. 25, 1992, abandoned, which is a continuation-in-part of Ser. No. 622,235, Dec. 5, 1990, Pat. No. 5,351,269. This application Apr. 7, 1994, Ser. No. 329,371

Int. Cl.[6] H04J *13/00*

U.S. Cl. 370—335 **39 Claims**

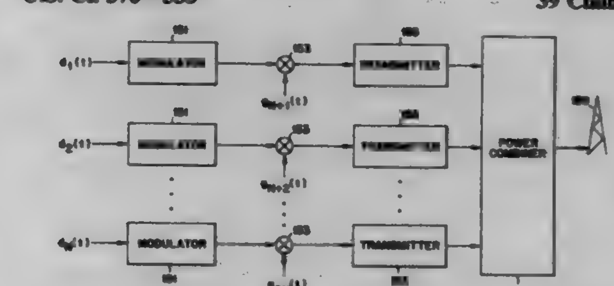

1. A spread-spectrum code division multiple access (CDMA) communications system for communicating data between a plurality of spread-spectrum units, said spread-spectrum CDMA communications system located within a same geographical region as occupied by a mobile-cellular system having an allocated frequency spectrum, with each cell of the mobile-cellular system having a cellular bandwidth divided into predetermined channels and having guard bands between the predetermined channels, the mobile-cellular system having cellular units communicating on the predetermined channels, said spread-spectrum CDMA communications system overlaying the cellular bandwidth and reusing the allocated frequency spectrum, comprising:

a plurality of spread-spectrum-base stations located within the mobile-cellular system for communicating data to the plurality of spread-spectrum units, each of said spread-spectrum-base stations including,

a base-modulator for converting the format of the data into a form for output to communicate over radio waves;

a base-spread-spectrum modulator for spread-spectrum-processing the converted data;

a base-transmitter for transmitting across cellular bandwidth the spread-spectrum-processed-converted data from the spread-spectrum-base station to a spread-spectrum unit as a spread-spectrum signal; and

a base-comb filter for attenuating the predetermined channels of the mobile-cellular system;

the plurality of spread-spectrum units, each of said plurality of spread-spectrum units including,

a unit antenna for receiving the spread-spectrum signal as a received signal; and

a unit-spread-spectrum-receiver, coupled to said antenna, for recovering the data in the received signal communicated from said spread-spectrum signal communicated from said spread-spectrum-base station, said unit-spread-spectrum-receiver including a unit filter and a unit demodulator.

5,703,875

INTEGRATED CONTROL AND DATA MESSAGE NETWORK

Robert W. Burnett, Torrance, Calif., assignor to Hughes Electronics, Los Angeles, Calif.

Filed Apr. 10, 1996, Ser. No. 630,567

Int. Cl.[6] H04L *12/56*

U.S. Cl. 370—381 **4 Claims**

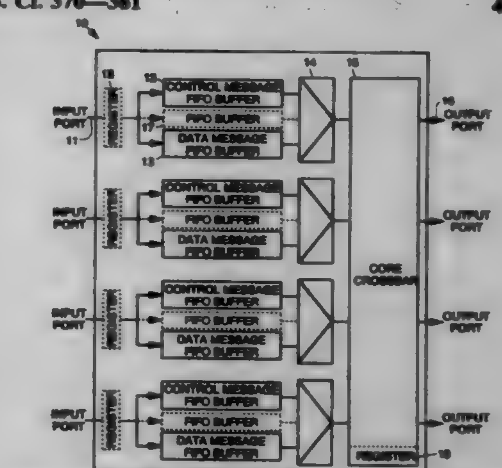

1. A switch for communicating control messages and data messages, said switch comprising:

a plurality of input ports;

a plurality of control message first-in, first-out buffers, each of which is coupled to a selected one of the input ports;

a plurality of data message first-in, first-out buffers, each of which is coupled to a selected one of the input ports;

a plurality of multiplexers, each of which is coupled to a selected one of the control message buffers and a selected one of the data message buffers;

a core crossbar switch coupled to the plurality of multiplexers; and

a plurality of output ports coupled to the core crossbar switch.

5,703,876
ATM TRANSPORT SYSTEM
Joseph Michael Christie, 536 Green Ave., San Bruno, Calif. 94066
Filed Nov. 22, 1995, Ser. No. 562,206
Int. Cl.⁶ H04L *12/66*
U.S. Cl. 370—395 **14 Claims**

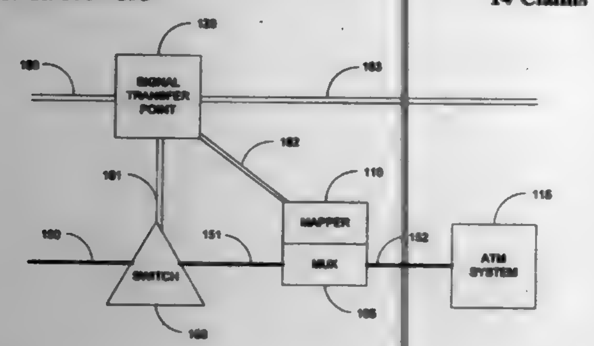

1. An asynchronous transfer mode (ATM) system for transporting user information in ATM cells that contain a virtual path identification/virtual channel identification (VPI/VCI), wherein the user information is from a continuous-signal transport system that uses a continuous signal to transport the user information and that produces Signaling System #7 (SS7) signaling related to the continuous signal, and wherein the continuous signal is associated with the VPI/VCI, the system comprises;

a processor that is operational to receive the SS7 signaling and detect when the continuous signal transports user information based on at least a portion of an SS7 Initial Address Message (IAM), wherein the processor is operational to use a Circuit Identification Code (CIC) in the SS7 IAM to identify the continuous signal and to associate the continuous signal with the VPI/VCI, wherein the processor is operational to provide a control instruction to enable the VPI/VCI when the continuous signal is transporting the user information, wherein the processor is operational to detect when the continuous signal is not transporting the user information, and wherein the processor is operational to provide a control instruction to disable the VPI/VCI when the continuous signal is not transporting the user information; and

an ATM interworking multiplexer connected to the continuous signal transport system and coupled to the processor, wherein the ATM interworking multiplexer is operational to receive the continuous signal from the continuous signal transport system, to associate the continuous signal with the VPI/VCI, to receive the control instructions from the processor, to generate and transmit ATM cells containing the VPI/VCI and the user information in response to the enabling control instruction, and to stop generating and transmitting ATM cells containing the VPI/VCI in response to the disabling control instruction.

5,703,877
ACQUISITION AND ERROR RECOVERY OF AUDIO DATA CARRIED IN A PACKETIZED DATA STREAM
Ray Nuber, La Jolla; Paul Moroney, Olivenhain, and G. Kent Walker, Escondido, all of Calif., assignors to General Instrument Corporation of Delaware, Chicago, Ill.
Filed Nov. 22, 1995, Ser. No. 562,611
Int. Cl.⁶ H04J *3/06;* **H04N** *7/12*
U.S. Cl. 370—395 **25 Claims**

9. A method for processing digital audio data from a packetized data stream carrying digital television information in a succession of transport packets having a fixed length of N bytes, each of said packets including a packet identifier (PID), some of said packets containing a program clock reference (PCR) value for synchronizing a decoder system time clock, and some of said packets containing a presentation time stamp (PTS) indicative of a time for

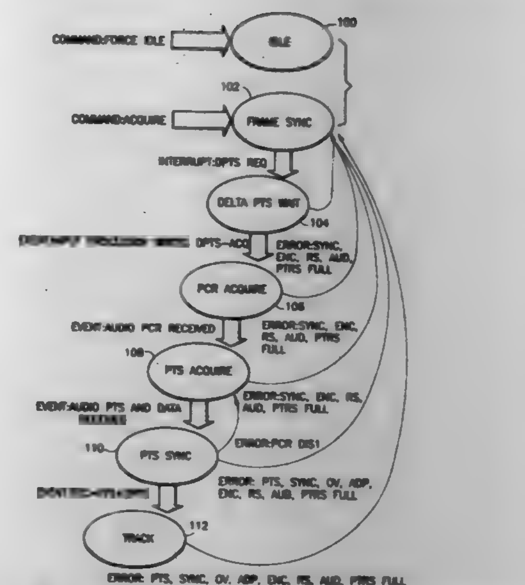

commencing the output of associated data for use in reconstructing a television signal, said method comprising the steps of:

monitoring the PID's for the packets carried in said data stream to detect audio packets;

examining the detected audio packets to locate the occurrence of audio synchronization words for use in achieving a synchronization condition, each two consecutive audio synchronization words defining an audio frame therebetween;

monitoring the detected audio packets after said synchronization condition has been achieved to locate an audio PTS;

searching the detected audio packets after locating said audio PTS to locate the next audio synchronization word;

storing audio data following said next audio synchronization word in a buffer;

detecting the occurrence of errors in said audio packets;

upon detecting a first audio packet of a current audio frame containing an error, advancing a write pointer for said buffer by N bytes and designating said current audio frame as being in error;

monitoring the detected audio packets of said current audio frame for the next audio synchronization word after said error has been detected, and if said synchronization word is not received where expected in the audio stream, discarding subsequent audio data while searching for said synchronization word rather than storing the subsequent audio data into said buffer;

resuming the storage of audio data in said buffer upon detection of said next audio synchronization word if said next audio synchronization word is located within N bytes after the commencement of the search therefor; and

if said next audio synchronization word is not located within said N bytes after the commencement of the search therefor, commencing a reacquisition of said synchronization condition.

5,703,878
METHOD OF TRANSFERRING STRUCTURED DATA OF CONSTANT BIT RATE TRAFFIC IN AN ATM NETWORK
Maurice Duault, Saint Laurent du Var, France, assignor to International Business Machines Corporation, Armonk, N.Y.
Division of Ser. No. 318,012, Oct. 4, 1994, Pat. No. 5,550,819. This application Jul. 24, 1996, Ser. No. 685,731
Claims priority, application European Pat. Off., Oct. 14, 1993, 93480159
Int. Cl.⁶ H04L *12/56*
U.S. Cl. 370—395 **6 Claims**

1. A method of transferring, from a transmitter to a receiver, structured data of a constant bit rate traffic in a cell switching network using the Asynchronous Transfer Mode (ATM) protocol,

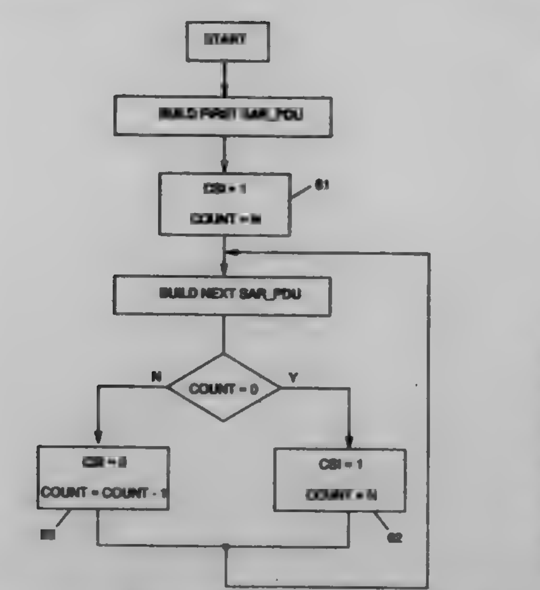

wherein the ATM Adaptation Layer (AAL) maps the higher layers Protocol Data Units (PDU) into the information field of the ATM cell using the functions of the Segmentation And Reassembly (SAR) sublayer, characterized in that it comprises the following steps:

at the transmitting end,

a) setting the Convergence Sublayer Indicator (CSI) equal to 1, in the first SAR_PDU of the connection, and

b) setting an internal counter to N where N is the length of a structured data field,

c) setting CSI=0 in the next SAR_PDU, and

d) decrementing the internal counter by one,

e) repeating steps c) and d) until the contents of the counter is equal to 1,

f) setting CSI=1 in the Nth SAR_PDU and resetting the counter to N,

g) repeating steps c) to f) until the last SAR_PDU of the connection is transmitted,

at the receiving end,

h) checking that CSI=1 in the first SAR_PDU received,

i) setting an internal counter to N,

j) decrementing the internal counter by one;

k) checking that for the next SAR_PDU having CSI=1, the counter is at 1,

l) resetting the counter to N,

m) repeating steps j), k), l) until the last SAR_PDU of the connection is received.

5,703,879
ATM SWITCHING ARRANGEMENT
Richard John Proctor; Mark Timothy Jeffrey, and Thomas Slade Maddern, all of Dorset, United Kingdom, assignors to GPT Limited, United Kingdom
Continuation of Ser. No. 385,750, Feb. 8, 1995, abandoned, which is a continuation of Ser. No. 30,166, May 20, 1993, abandoned. This application Mar. 8, 1996, Ser. No. 612,767
Claims priority, application United Kingdom, Aug. 2, 1991, 911676
Int. Cl.⁶ H04L *12/64*
U.S. Cl. 370—398 **11 Claims**

1. An asynchronous transfer mode (ATM) telecommunications switch for routing cells containing control information and data information, comprising: a plurality of parallel data switching planes and a single parallel control plane for controlling all of the data switching planes, said control plane having an equal number of input control ports and output control ports, each data switching plane including a central switching unit having an equal number of input data ports and output data ports, each central switching unit having a plurality of timeslots for switching each input data port to

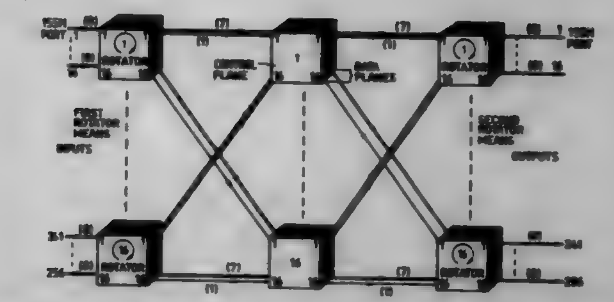

any output data port; input rotator means having a plurality of first rotator inputs and first rotator outputs, for cyclically connecting each first rotator input to route the data information to each input data port and to route the control information to each input control port in a predetermined timed sequence; and output rotator means having a plurality of second rotator inputs and second rotator outputs, for cyclically connecting the data information at each output data port and the control information at each output control port to each second rotator output in the same predetermined timed sequence.

5,703,880
DATA COMMUNICATION METHOD FOR COMMUNICATING DATA HAVING DIFFERENT FRAME FORMATS AND FORMAT CONVERSION UNIT USED FOR SUCH A DATA COMMUNICATION METHOD
Kenji Miura, Nagoya, Japan, assignor to Fujitsu Limited, Kanagawa, Japan
Filed Nov. 30, 1995, Ser. No. 565,731
Claims priority, application Japan, May 8, 1995, 7-109323
Int. Cl.⁶ G06F *13/38;15/16*
U.S. Cl. 370—465 **16 Claims**

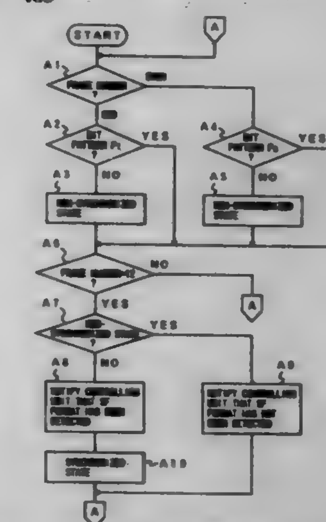

1. A data communication method between terminals connected via an asynchronous transfer mode (ATM) network in which frame structure data is transmitted in the force of an ATM cell, said terminals including at least a first terminal and a second terminal, said first terminal adapted to handle first frame structure data having a first frame format and said second terminal adapted to handle second frame structure data having a second frame format different from said first frame format, the method comprising the steps of:

a) distinguishing a type of frame format of the frame structure data to be sent to one of said terminals by detecting a synchronization pattern of the frame structure data;

b) converting the frame structure data when the frame structure data is sent to said one of said terminals so that the converted frame structure data has a type of frame format corresponding to the synchronization pattern detected in the step a); and

wherein the step b) is performed when the frame structure data is assembled into the ATM cell.

5,703,881
MULTI-SUBSCRIBER UNIT FOR RADIO COMMUNICATION SYSTEM AND METHOD
Stanley E. Kay, Rockville; Pradeep Kaul, Darnestown, both of Md.; Michael I. Parr; Graham Avis, both of San Diego, Calif.; John E. Corrigan, III, Chevy Chase, Md.; Daniel Wendling, Darnestown, Md., and Ashok D. Mehta, North Potomac, Md., assignors to Hughes Electronics, Los Angeles, Calif.
Continuation-in-part of Ser. No. 929,337, Aug. 13, 1992, abandoned, which is a continuation-in-part of Ser. No. 622,232, Dec. 6, 1990, Pat. No. 5,299,198. This application Mar. 9, 1993, Ser. No. 28,502
Int. Cl.⁶ H04J *3/17*
U.S. Cl. 370—468 **47 Claims**

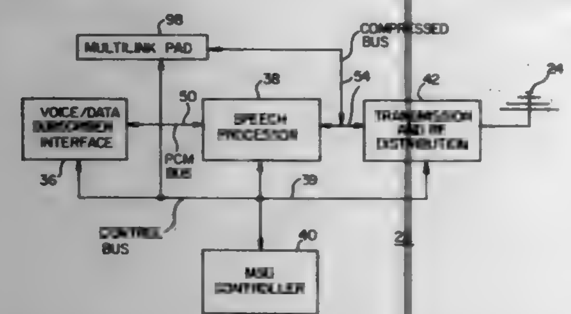

1. In a system for telephony communication of subscriber telephones through a radio link with a remotely located base station, the base station having a transceiver and a link to a telephone network, a multisubscriber unit for radio telephony communication between the subscriber telephones and the base station transceiver comprising:
- a plurality of connectors for providing electrical communication with the plurality of subscriber telephones;
- a subscriber interface coupled to the connectors for detecting an off-hook condition at each of the telephones;
- a subscriber activity detector for detecting, through the connectors, the presence of data to be transmitted at each telephone at which an off-hook condition is detected;
- a processor for modulating data from the telephones for transmission over the radio link, the processor having a plurality of modulators each independently assignable to one of the plurality of telephones;
- a transceiver for transmitting the modulated data from each telephone at which data is detected to the base station and for receiving data from the base station for transmission to the telephones;
- a processor for demodulating data from the transceiver for transmission through the connectors to the telephones, the processor having a plurality of demodulators each independently assignable to one of the plurality of telephones;
- a controller for assigning the modulators and demodulators among those telephones for which the presence of data is detected and for deallocating the modulators and demodulators from those telephones for which the end of data presence is detected.

5,703,882
CYCLIC LINE CODING APPARATUS FOR ERROR DETECTION AND FRAME RECOVERY
Hee Young Jung; Bhum Cheol Lee, and Kwon Chul Park, all of Daejeon, Rep. of Korea, assignors to Electronics and Telecommunications Research Institute, and Korea Telecommunication Authority, Rep. of Korea
Filed Dec. 12, 1995, Ser. No. 571,077
Claims priority, application Rep. of Korea, Dec. 23, 1994, 1994-36126
Int. Cl.⁶ G06F *11/10*
U.S. Cl. 370—474 **1 Claim**

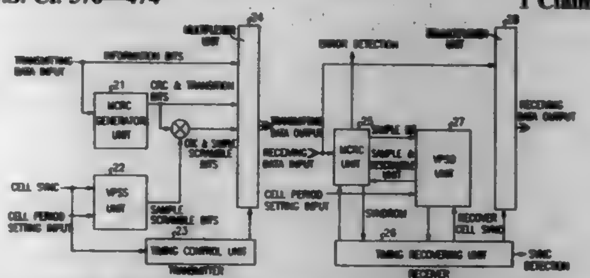

1. A cyclic line coding apparatus for error detection and frame recovery over a digital transmission line comprising:
- a transmitter including
- a modified cyclic redundancy generator means for executing a cyclic redundancy check for every block of cell data received from the digital transmission line, thereby generating redundancy bits enabling the cell data to have at least one transition for every block,
- a variable period sampled scrambler means for generating periodic sample and scramble bits in accordance with a cell synchronization signal and a cell period setting signal both received from the digital transmission line and partially scrambling the redundancy bits generated from the modified cyclic redundancy generator means using the period sample and scramble bits,
- a timing control means for receiving a cell synchronization signal from the digital transmission line and generating a timing signal required to multiplex the partially scrambled redundancy bits in accordance with the cell synchronization signal, and
- a multiplexer means for multiplexing user information of the cell data and the partially scrambled redundancy bits in accordance with the timing signal from the timing control means; and
- a receiver including
- a modified cyclic redundancy checker means for executing a cyclic redundancy check for every block of input cell data, thereby detecting a block synchronization, the modified cyclic redundancy checker means outputting a block synchronization signal and sample bits when the block synchronization is detected, while outputting a synchronization error signal when no block synchronization is detected,
- a variable period sampled descrambler means for generating descramble bits in accordance with the sample bits received from the modified cyclic redundancy checker means and a cell period setting signal received from the digital transmission line, the cell period setting signal being identical to that used in the transmitter, the variable period sampled descrambler means sending the descramble bits to the modified cyclic redundancy checker means,
- a timing recovering means for receiving the block synchronization-detected result from the modified cyclic redundancy checker means and the cell synchronization-detected result from the variable period sampled descrambler means, thereby generating timing signals respectively associated with a search for the block synchronization and a search for the descramble bits synchronized with the transmitter, and
- a demultiplexer means for demultiplexing the cell data in accordance with the timing signals from the timing recovering means.

5,703,883
EXPANDABLE REPEATER CONTROLLER
Jone-Jane Chen, Taipei Hsien, Taiwan, assignor to United Microelectronics Corporation, Hsinchu, Taiwan
Filed Sep. 29, 1995, Ser. No. 536,935
Int. Cl.⁶ H04B *3/36*
U.S. Cl. 370—501 **6 Claims**

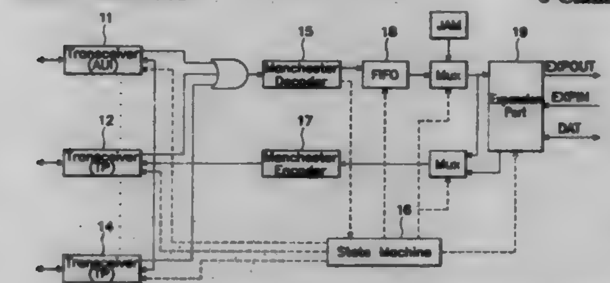

1. An expandable repeater controller for connecting workstations, comprising:
- a plurality of transceivers for data communication with said workstations;
- a decoder for decoding data received from said transceivers;
- an encoder for encoding data sent to said transceivers;
- a state machine for controlling operations of said transceivers; and
- an expansion port circuit, controlled by said state machine, for receiving decoded data from said decoder and sending data to said encoder, said expansion port circuit including means for transmitting over a first expansion port an outgoing interface signal when said expandable repeater controller is going to transmit data, means for receiving an incoming interface signal over a second expansion port when said expandable repeater controller is requested to receive data and means for transmitting and receiving data over a third expansion port.

5,703,884
SCANNING PASS TEST CIRCUIT
Hideharu Ozaki, Tokyo, Japan, assignor to NEC Corporation, Tokyo, Japan
Filed Jun. 18, 1996, Ser. No. 665,538
Claims priority, application Japan, Jun. 23, 1995, 7-180736
Int. Cl.⁶ G01R *31/28*
U.S. Cl. 371—22.3 **5 Claims**

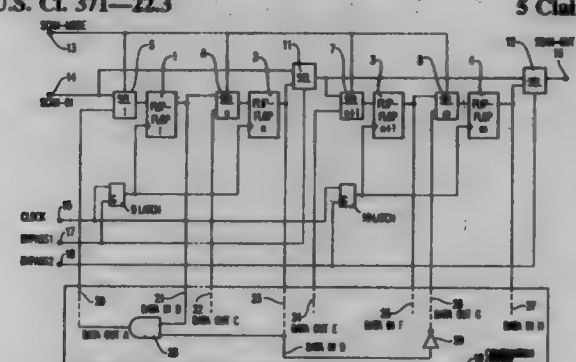

1. A scanning pass test circuit comprising:
- a scan-in terminal;
- a scan-out terminal;
- a plurality of flip-flops connected together in series, wherein said plurality of flip-flops are divided into groups to form a first shift register and a second shift register;
- first means for selectively connecting said scan-in terminal with an input node of either of said first and second shift registers for shifting input data inputted to said scan-in terminal;
- second means for selectively connecting said scan-out terminal with an output node of said first shift register when said first means connects said scan-in terminal with an input of said first shift register, and for selectively connecting said scan-out terminal with an output node of said second shift register when said first means connects said scan-in terminal with an input of said second shift register; and
- third means for supplying a shift clock to said first shift register and not supplying said shift clock to said second shift register when said first means connects said scan-in terminal with said input of said first shift register.

5,703,885
METHOD AND APPARATUS FOR CONSTRUCTING VERIFICATION TEST SEQUENCES BY MERGING AND TOURING HIERARCHICAL UNIQUE INPUT/OUTPUT SEQUENCE (UIO) BASED TEST SUBSEQUENCE GRAPHS
Xiao Sun, and Carmie A. Hull, both of Austin, Tex., assignors to Motorola, Inc., Schaumburg, Ill.
Filed Mar. 6, 1995, Ser. No. 399,008
Int. Cl.⁶ G01R *31/28;* **G06F** *11/00*
U.S. Cl. 371—27 **26 Claims**

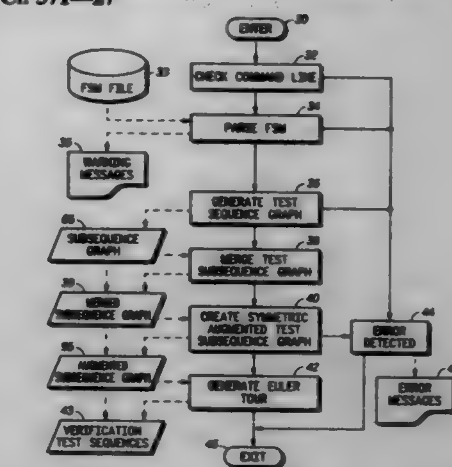

1. A method of generating a Verification Test Sequence (VTS) for storage in a memory for testing conformance of a Machine Under Test (MUT) with a Finite State Machine (FSM) model, wherein:
- the FSM model has a plurality of Model States and a plurality of State Transitions between pairs of Model States,
- each of the State Transitions has an associated First Transition State and an associated Last Transition State,
- each of the State Transitions has a corresponding Input/Output (I/O) Sequence that includes an Input Stimulus and a corresponding Output Response, and
- each said Input Stimulus comprises one or more Input Stimulus Signals;

said method comprising the steps of:
- (a) identifying a Set of Unique I/O Sequence (UIO) Sets to correspond to each of a plurality of Edges-Under-Test (EUT), wherein:
  - each of the Edges-Under-Test (EUT) corresponds to a different State Transition,
  - each member of each Set of Unique I/O Sequence (UIO) Sets is a Unique I/O Sequence (UIO) Set,
  - each Unique I/O Sequence (UIO) Set uniquely identifies its corresponding Edge-Under-Test (EUT), and
  - each member of each Unique I/O Sequence (UIO) Set comprises a First Sequentially Ordered Series of I/O Sequences that corresponds to a First Sequentially Ordered Series of State Transitions;
- (b) selecting one member from each said Set of Unique I/O Sequence (UIO) Sets as Selected Unique I/O Sequence (UIO) Sets, wherein:
  - each of the Selected Unique I/O Sequence (UIO) Sets is associated with one Edge-Under-Test (EUT), and
  - each of the members of each of the Selected Unique I/O Sequence Sets is a Selected I/O Sequence;
- (c) constructing a Test Subsequence (TS) Set for storage in the Memory for each of the Edges-Under-Test (EUT), wherein:

each member of each Test Subsequence (TS) Set is a Test Subsequence (TS),
each of the Test Subsequences (TS) comprises one Selected I/O Sequence and the I/O Sequence corresponding to the Edge-Under-Test (EUT) associated with the Selected Unique I/O Sequence (UIO) Set containing the respective Selected I/O Sequence, and
each Test Subsequence (TS) comprises a Second Sequentially Ordered Series of I/O Sequences that corresponds to a Second Sequentially Ordered Series of State Transitions;
(d) constructing a Test Subsequence (TS) Graph for storage in the Memory, wherein:
said Test Subsequence (TS) Graph is a Directed Graph with a plurality of Test Subsequence (TS) Graph Vertices connected by a plurality of Test Subsequence (TS) Graph Edges,
each of the Test Subsequence (TS) Graph Vertices corresponds to one of the plurality of Model States, and
each of the Test Subsequence (TS) Graph Edges corresponds to one of the Test Subsequences (TS);
(e) augmenting said Test Subsequence (TS) Graph to form an Augmented Test Subsequence (TS) Graph for storage in the Memory by adding Bridging Sequences to the Test Subsequence (TS) Graph, wherein:
each of the Bridging Sequences comprises a Third Sequentially Ordered Series of I/O Sequences that corresponds to a Third Sequentially Ordered Series of State Transitions;
(f) generating the Verification Test Sequence (VTS) for storage in the Memory by conducting a Tour of said Augmented Test Subsequence (TS) Graph, wherein:
the Verification Test Sequence (VTS) comprises a Fourth Sequentially Ordered Series of I/O Sequences that corresponds to a Fourth Ordered Series of State Transitions,
the Test Subsequence (TS) corresponding to each of the Augmented Test Subsequence (TS) Graph Edges is sequentially generated as part of the Verification Test Sequence (VTS) as the respective Augmented Test Subsequence (TS) Graph Edge is sequentially traversed in the Tour, and
the Tour is complete when all Augmented Test Subsequence (TS) Graph Edges have been traversed; and
(g) providing Control Signals to a Computer Processor to compute a Distinctness Measurement for each State Transition in the FSM model, wherein said Distinctness Measurement is utilized to identify Unique I/O Sequence (UIO) Sets.

5,703,886

ERROR DETECTING APPARATUS FOR PACKET EXCHANGE

Seong Sam Lee, and Yong Don Kwon, both of Kyoungki-do, Rep. of Korea, assignors to Hyundai Electronics Industries Co., Ltd., Kyoungki-Do, Rep. of Korea

Filed Mar. 15, 1996, Ser. No. 616,301

Claims priority, application Rep. of Korea, Mar. 16, 1995, 95-5489

Int. Cl.^{6} H03M *13/00*

U.S. Cl. 371—37.1 **4 Claims**

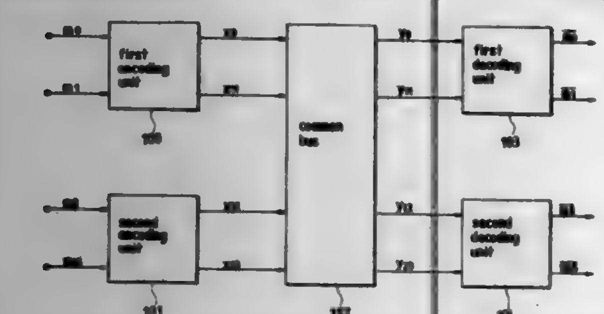

1. An error detecting apparatus for a packet exchange comprising:
a pair of encoding means each adapted to encode 8-bit data and four code bits for an error detection, thereby generating a 12-bit coded vector;
a common bus adapted to interface the 12-bit coded vectors respectively generated from the encoding means; and
a pair of decoding means adapted to share the common bus with each other, thereby respectively receiving the coded 12-bit vectors, each decoding means extracting original 8-bit data from the received 12-bit vector, thereby detecting and correcting errors.

5,703,887

SYNCHRONIZATION AND ERROR DETECTION IN A PACKETIZED DATA STREAM

Chris Heegard, Ithaca, N.Y.; Andrew J. King, Phoenix, Ariz.; Sydney Lovely, Phoenix, Ariz., and Thomas J. Kolze, Phoenix, Ariz., assignors to General Instrument Corporation of Delaware, Chicago, Ill.

Filed Dec. 23, 1994, Ser. No. 363,252

Int. Cl.^{6} H03M *13/00;* **H04L** *7/00*

U.S. Cl. 371—42 **24 Claims**

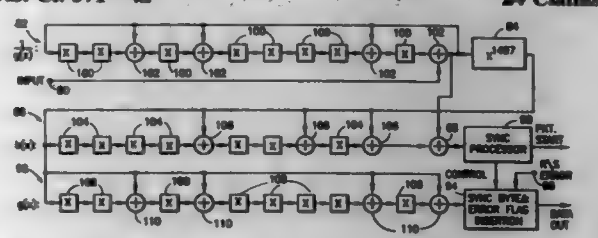

22. Apparatus for calculating syndromes for linear block coded codewords, comprising:
a finite impulse response filter having an input for receiving a serial bit stream of codeword data, each codeword containing k information bits and r parity bits, said filter having an output for providing a serial bit stream of syndromes, said syndromes comprising a fixed linear combination of a current bit of said codeword data input to said filter and the k previous bits of said codeword data;
wherein said filter has an impulse response $h^{k+1}(x)$, where:

$$h^{k+1}(x)=\frac{a(x)-x^{k+1}b(x)}{g(x)},$$

g(x) is a generator polynomial of degree r describing a recursion to provide an infinite impulse response, and
a(x) and b(x) are polynomials chosen such that the polynomial $h^{k+1}(x)$ will be of degree k, have a non-zero constant term $h_0=1$, and have a non-zero final term $h_k=1$ to provide finite impulse responses.

5,703,888

METHOD FOR CHECKING A RELOADABLE MEMORY, MEMORY CHECKING DEVICE, AND AUTOMATIC DATA RESTORING DEVICE

Masashi Matsumoto; Yasushi Saito; Takao Ichihashi, and Shuji Yamada, all of Osaka, Japan, assignors to Mita Industrial Co., Ltd., Osaka-fu, Japan

Continuation of Ser. No. 234,774, Apr. 28, 1994, abandoned. This application Jul. 23, 1996, Ser. No. 685,325

Claims priority, application Japan, May 10, 1993, 5-108600

Int. Cl.^{6} G06F *11/08*

U.S. Cl. 371—51.1 **5 Claims**

1. A device for checking a memory reloadable with operative data in connection with a specified operation, the device comprising:
check data generator means for generating check data;
writing means for writing the check data on a specified portion of the memory each time the memory is reloaded with operative data;

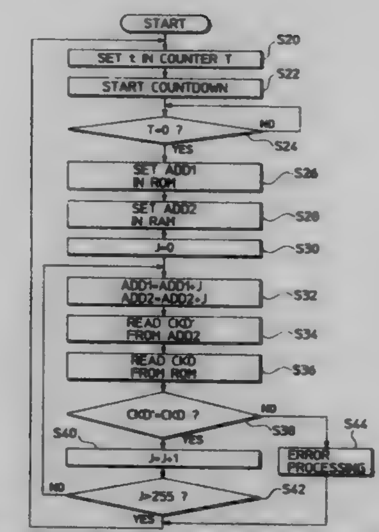

reading means for reading data from the specified portion of the memory after the reloading of operative data and the writing of the check data, the reading means including timer means for measuring a predetermined time after the reloading of operative data and writing of the check data, the reading means executing the reading of data from the specified portion of the memory after the lapse of the predetermined time; and
judge means for judging whether the read data agrees with the generated check data.

5,703,889

HIGH EFFICIENCY CODING SIGNAL PROCESSING APPARATUS WITH ERROR PROPAGATION INFLUENCE REDUCTION

Kenji Shimoda, and Hitoshi Takeda, both of Yokohama, Japan, assignors to Kabushiki Kaisha Toshiba, Kawasaki, Japan

Continuation of Ser. No. 891,952, Jun. 1, 1992, abandoned. This application Dec. 14, 1994, Ser. No. 355,828

Claims priority, application Japan, Jun. 4, 1991, 3-132999

Int. Cl.^{6} H03M *13/00;* **G06F** *11/00*

U.S. Cl. 371—55 **4 Claims**

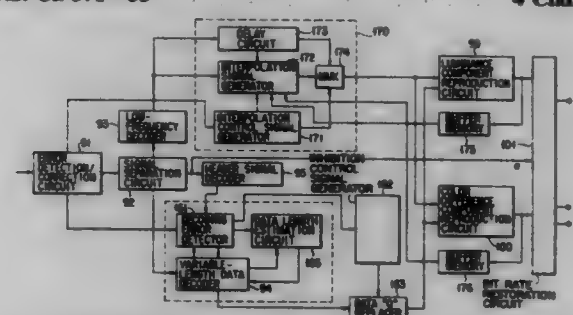

4. A high efficiency coding signal processing apparatus comprising:
decoding means for decoding variable-length data, the variable-length data being encoded in units of predetermined blocks within a frame;
a decoding error detector for detecting an error block within the decoded data;
holding means for holding the decoded data; and
data length estimation means for receiving, from the holding means, a selected one of the blocks of the decoded data, for estimating, based upon a data length of the selected one of the blocks, a data length of the error block, and for designating a starting position for the decoding means to decode a subsequent block, the starting position being based upon the estimated data length of the error block, the selected block being the block which directly precedes the error block.

5,703,890

MICROLASER CAVITY, A SOLID STATE PULSED MICROLASER WITH ACTIVE Q-SWITCHING BY A MICROMODULATOR AND METHOD FORMING SAME

Philippe Thony, Grenoble; Marc Rabarot, Seyssinet, and Engin Molva, Grenoble, all of France, assignors to Commissariat a l'Energie Atomique, Paris, France

Filed Jun. 14, 1996, Ser. No. 663,664

Claims priority, application France, Jun. 27, 1995, 95 07716

Int. Cl.^{6} H01S *3/115*

U.S. Cl. 372—12 **20 Claims**

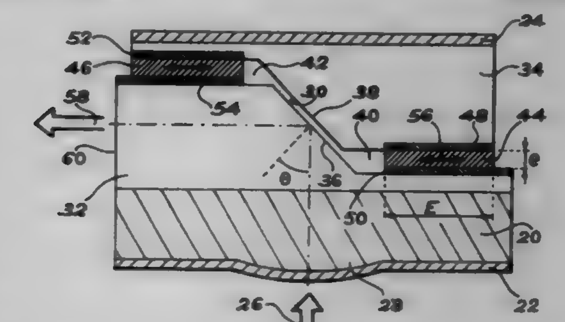

1. A microlaser cavity with active Q switching comprising:
an active laser medium, an input mirror and an output mirror defining the cavity,
a micromodulator with frustrated total internal reflection, comprising two microprisms made of a certain material of index n_1 each having at least one planar face, the two planar faces being approximately parallel to each other and inclined onto the microlaser cavity axis, thereby defining a plate of a certain material of index n_2 less than n_1,
means for varying the thickness of the plate.

15. A method of manufacturing a microlaser cavity with active Q switching comprising:
a step of forming, on an active laser medium, a micromodulator with frustrated total internal reflection,
a step of forming means to vary the thickness of the plate,
a step of forming the input and output mirrors of the cavity.

5,703,891

PULSE FORMING NETWORK ASSEMBLY

Peter E. Phillips, Redondo Beach, and Vikram D. Desai, Lake Forest, both of Calif., assignors to Hughes Aircraft Company, Los Angeles, Calif.

Filed Nov. 28, 1995, Ser. No. 563,502

Int. Cl.^{6} H05B *41/30*

U.S. Cl. 372—38 **4 Claims**

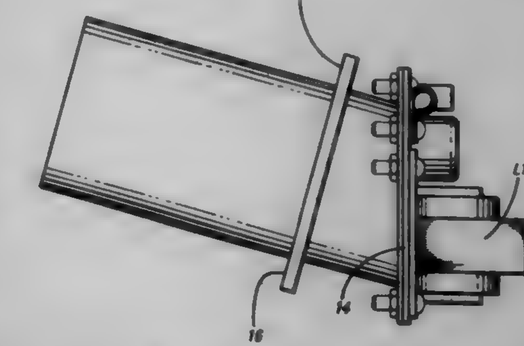

1. A pulse forming network assembly for use with a laser flashlamp comprising:
a planar printed circuit board;
an electrical circuit, including a field effect transistor, mounted on a first side of the printed circuit board and having electrical contacts extending therethrough;

wave solder connected the electrical contacts of the electrical circuit on a second side of the printed circuit board; and
an energy storage element mounted on a second side of the printed circuit board, said energy storage element having terminals which are connected to said contacts of said electrical circuit.

5,703,892
METHOD OF MODE DETECTION AND CONTROL IN SEMICONDUCTOR LASERS
Paul Claisse, and Philip Kiely, both of Gilbert, Ariz., assignors to Motorola, Inc., Schaumburg, Ill.
Filed Jul. 1, 1996, Ser. No. 673,003
Int. Cl.⁶ H01S *3/10*
U.S. Cl. 372—32 **9 Claims**

1. A method of determining a shift in the spatial mode in which a semiconductor laser is operating comprising the steps of:
monitoring spontaneous emissions versus drive current of a semiconductor laser; and
identifying a point above a threshold current at which the rate-of-change of the spontaneous emissions versus drive current abruptly changes.

5,703,893
LASER DIODE MODULE
Manabu Komiyama; Shunichi Sato; Noboru Sonetsuji; Tetsuo Ishizaka, and Saeko Yokoi, all of Kawasaki, Japan, assignors to Fujitsu Limited, Kanagawa, Japan
Filed Jul. 25, 1995, Ser. No. 506,866
Claims priority, application Japan, Jan. 13, 1995, 7-004512
Int. Cl.⁶ H01S *3/043*
U.S. Cl. 372—43 **7 Claims**

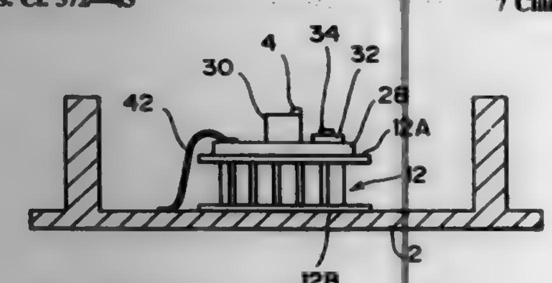

1. A laser diode module comprising:
a housing;
a thermoelectric cooling element having a first surface and a second surface, said first surface being in close contact with an inner surface of said housing, for performing heat exchange between said first surface and said second surface according to a supplied control current;
a base having a third surface and a fourth surface, said third surface being in close thermal contact with said second surface of said cooling element;
a laser carrier and a thermistor carrier both provided on said base in close contact with said fourth surface;
a laser diode and a thermistor provided respectively on said laser carrier and said thermistor carrier in close thermal contact therewith; and
a metal plate directly connected between said fourth surface of said base and said housing for correcting a temperature balance between said laser diode and said thermistor by thermally connecting a portion of said fourth surface of said base directly to said housing.

5,703,894
RADIATION-EMITTING SEMICONDUCTOR DIODE AND METHOD OF MANUFACTURING SUCH A DIODE
Adriaan Valster; Johannes A. De Poorter, and Gerard A. Acket, all of Eindhoven, Netherlands, assignors to U.S. Philips Corporation, New York, N.Y.
Filed Oct. 3, 1995, Ser. No. 538,267
Claims priority, application European Pat. Off., Oct. 6, 1994, 94202895
Int. Cl.⁶ H02S *3/19*
U.S. Cl. 372—46 **9 Claims**

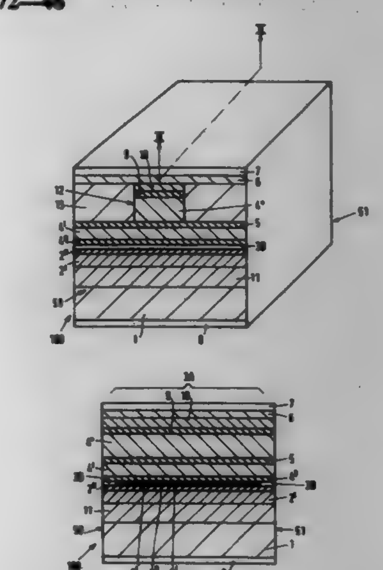

1. A radiation-emitting semiconductor diode, comprising:
a semiconductor body with a semiconductor substrate of a first conductivity type,
a first cladding layer of the first conductivity type, an active layer, and a second cladding layer of a second conductivity type opposed to the first, said layers being present on said substrate, said cladding layers including means for supplying current,
said active layer comprising a mixed crystal of III–V semiconductor materials in which atoms of different elements may be present on a sub-lattice, said active layer including exit surfaces, passive regions adjacent the exit surfaces, and a strip-shaped active region separated by the passive regions from the exit surfaces for radiation generated in the diode, and
the distribution of the atoms of different elements over the sub-lattice in the active region being disorderly, and the passive region being formed through local intermixing of the active layer.

5,703,895
OPTO-ELECTRONIC SEMICONDUCTOR DEVICE INCLUDING AN INTEGRATED MODE TRANSFORMER
Frédéric Ghirardi, Paris; Boumédienne Mersali, Arcueil; Adrien Bruno, Palaiseau, and Louis Giraudet, Pantin, all of France, assignors to France Telecom, Paris, France
Filed Apr. 28, 1995, Ser. No. 431,092
Claims priority, application France, May 2, 1994, 94 05304
Int. Cl.⁶ H01S *3/19*
U.S. Cl. 372—50 **23 Claims**

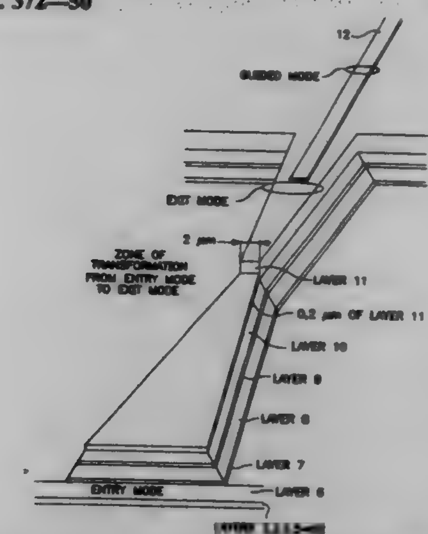

1. A semiconductor opto-electronic device including at least one electronic function component (62), at least one optical function component (60) and a mode transformer associated with the optical function component, wherein at least some layers of the semiconductor material constituting the electronic function component also form optical layers in a mode transformer zone and, at least in the mode transformer zone, said semiconductor material layers (62) are non-absorbent at an operating wavelength, and wherein said semiconductor material layers (62) simultaneously forming the electronic function component and layers in the mode transformer zone are made from a material that is initially homogeneous and is rendered locally non-absorbent at the operating wavelength in the optical part.

5,703,896
SILICON QUANTUM DOT LASER
Jacques Isaac Pankove; Garret Robin Moddel, and Kenneth Douglas, all of Boulder, Colo., assignors to The Regents of the University of Colorado, Boulder, Colo.
Continuation-in-part of Ser. No. 473,523, Jun. 7, 1995, Pat. No. 5,559,822. This application Mar. 5, 1996, Ser. No. 612,021
Int. Cl.⁶ H01S *3/19*
U.S. Cl. 372—50 **4 Claims**

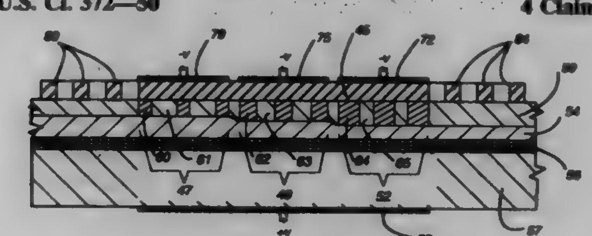

1. Apparatus for emitting varying colors of light comprising:
a lasing layer formed of crystalline silicon quantum dots formed in an isolation matrix of hydrogenated silicon;
said quantum dots being formed in three patches;
each of said three patches having different sized quantum dots therein to thereby produce three different colors of light;
a barrier layer of p-type semiconductor under said lasing layer, said p-type semiconductor being selected from the group GaP, SiC, GaN, ZnS;
a substrate member under said barrier layer;
an n-type semiconductor layer above said lasing layer, said n-type semiconductor layer being selected from the group GaP, SiC, GaN, ZnS;
a positive potential contact beneath said substrate member;
three negative potential contacts;
each of said three contacts being above a different one of said three patches;
each of said three contacts acting with said positive contact to selectively bias a different one of said three patches;
three sectors of concentric grating surrounding said three patches;
each of said sectors having a radial period corresponding to the color of light produced by an adjacent one of said three patches; and
each of said sectors resonating photons emitted by said adjacent patch to stimulate coherent light emission.

5,703,897
SEMICONDUCTOR LASER WITH INTEGRAL SPATIAL MODE FILTER
David F. Welch, Palo Alto; David G. Mehuys, Menlo Park, and Donald R. Scifres, San Jose, all of Calif., assignors to SDL, Inc., San Jose, Calif.
Continuation of Ser. No. 483,667, Jun. 7, 1995, abandoned, which is a division of Ser. No. 263,190, Jun. 21, 1994, Pat. No. 5,592,503, which is a division of Ser. No. 1,735, Jan. 7, 1993, Pat. No. 5,392,308. This application Sep. 10, 1996, Ser. No. 707,022
Int. Cl.⁶ H01S *3/19*
U.S. Cl. 372—50 **15 Claims**

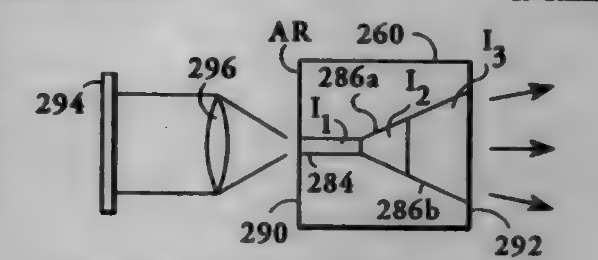

1. A semiconductor laser source comprising:
a longitudinally extending body of semiconductor material having an optical cavity,
a diverging gain region included in a portion of the body longitudinal extent and having a narrow input end and wider output end for achieving higher power output,
a single spatial mode aperture region included in another portion of the body longitudinal extent optically coupled to said diverging gain region narrow input end,
a portion of said single spatial mode aperture region for mode-locking the operation of said laser source, and
means to modulate said portion of said single spatial mode aperture region independent of electrical operation of said diverging gain region to achieve mode lock operation of said laser source.

5,703,898
SURFACE EMISSION LASER AND METHOD OF MANUFACTURING THE SAME
Ichiro Ogura, Tokyo, Japan, assignor to NEC Corporation, Tokyo, Japan
Filed Dec. 8, 1995, Ser. No. 569,060
Claims priority, application Japan, Dec. 21, 1994, 6-335832
Int. Cl.⁶ H01S *3/08;3/19;* **H01L** *21/20*
U.S. Cl. 372—96 **7 Claims**

1. A surface emission laser having a semiconductor multilayer reflector of a first conductivity type, a clad layer of the first conductivity type, an active layer, a clad layer of a second conduc-

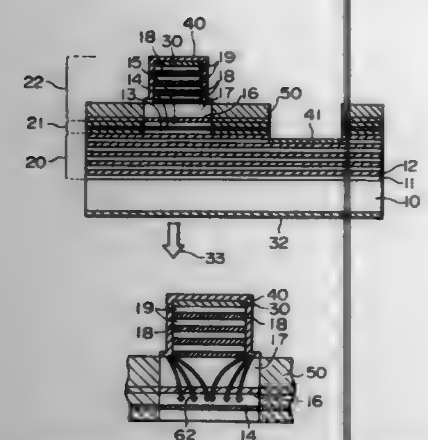

tivity type, and a semiconductor multilayer reflector of the second conductivity type, which are sequentially stacked on each other, wherein said semiconductor multilayer reflector of the second conductivity type has a mesa shape, an electrode is formed on mesa side surfaces and a portion of a mesa bottom surface, and one semiconductor film of said semiconductor multilayer reflector of the second conductivity type which serves as the mesa bottom surface has a thickness (¼+n/2, where n is a positive integer) times an oscillation wavelength.

5,703,899
GAIN-COUPLING DISTRIBUTED FEEDBACK SEMICONDUCTOR AND METHOD OF PRODUCING THE SAME
Natsuhiko Mizutani, Yokohama, Japan, assignor to Canon Kabushiki Kaisha, Tokyo, Japan
Continuation of Ser. No. 200,509, Feb. 24, 1994, abandoned. This application Jun. 3, 1996, Ser. No. 659,114
Claims priority, application Japan, Mar. 1, 1993, 5-064762
Int. Cl.[6] H01S *3/08*
U.S. Cl. 372—96 48 Claims

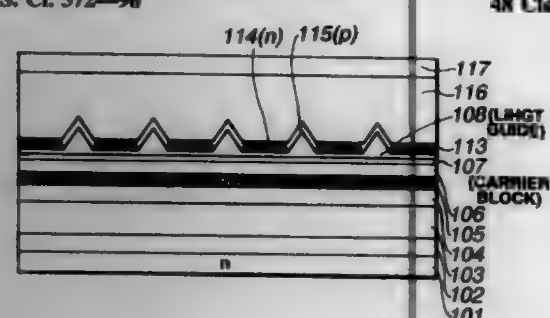

1. A gain-coupling distributed feedback semiconductor laser comprising:
a waveguide including an active layer; and
a current restraint layer formed along said waveguide, said current restraint layer including p- and n-type semiconductor portions which are periodically and alternatively arranged along a light propagation direction;
wherein said current restraint layer is grown on a periodic uneven surface, wherein pitch of carrier density of current injected by said current restraint layer is equal to a value of one half of a pitch of the periodic uneven surface.

5,703,900
LASER-DIODE-PUMPED SOLID STATE LASER AND METHOD OF MANUFACTURING THE SAME
Nobuharu Nozaki; Shinji Mitsumoto; Kazumi Kubo, all of Kanagawa-ken, and Fumio Kobayashi, Saitama-ken, all of Japan, assignors to Fuji Photo Film Co., Ltd., Kanagawa, and Fuji Photo Optical Co., Ltd., Saitama-ken, both of Japan
Filed Dec. 28, 1995, Ser. No. 580,183
Claims priority, application Japan, Dec. 28, 1994, 6-327791
Int. Cl.[6] H01S *3/08*
U.S. Cl. 372—107 3 Claims

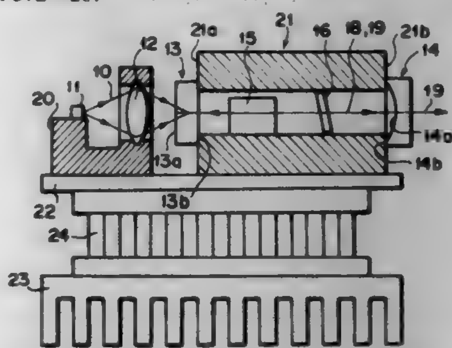

1. A laser-diode-pumped solid state laser comprising a Fabry-Perot resonator having a pair of resonator mirrors wherein the improvement comprises that
a holder is provided with a pair of mirror mounting faces spaced from each other in the direction of the optical axis of the resonator,
the resonator mirrors are mounted by bonding the end face thereof, which intersects the optical axis of the resonator, to the mirror mounting faces of the holder by an adhesive layer, and
the thickness of the adhesive layer is not larger than 5μ.

5,703,901
CALCINATION FURNACE
Yasuo Ohtani, Yokohama; Takuo Kataho; Makoto Satoh, both of Akita-ken; Tsutomu Tanaka, Chiba; Yoshimasa Nose, Funabashi; Kazuyoshi Kobayashi, Akita-ken; Tetsuhide Uchikawa, Shizuoka-ken, and Toshihiro Hamahata, Sakura, all of Japan, assignors to TDK Corporation, Tokyo, Japan
Continuation of Ser. No. 80,570, Jun. 21, 1993, Pat. No. 5,559,826. This application Jun. 14, 1996, Ser. No. 664,340
Claims priority, application Japan, Jun. 23, 1992, 4-188763; Sep. 14, 1992, 4-271216; Oct. 20, 1992, 4-306418
Int. Cl.[6] H05B *3/00*
U.S. Cl. 373—109 30 Claims

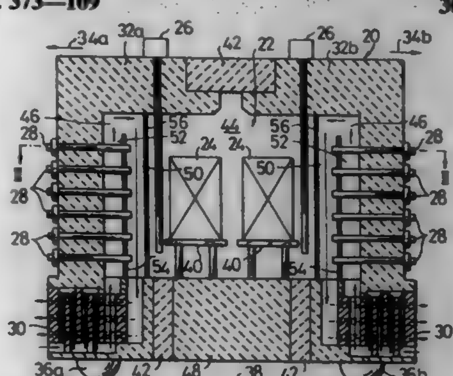

1. A calcination furnace comprising:
a furnace body in which a furnace chamber is defined;
a heat source for heating said furnace chamber, including first and second heat source means;
said furnace chamber including a first furnace chamber section and at least one second furnace chamber section, said first furnace chamber section receiving therein a calcined intermediate product and said second furnace chamber section being partitioned from said first furnace chamber section; and
said first furnace chamber section being provided with said first heat source means and said second furnace chamber being provided with said second heat source means.

5,703,902
METHOD AND APPARATUS FOR DETERMINING SIGNAL STRENGTH IN A VARIABLE DATA RATE SYSTEM
Noam Abraham Ziv, and Roberto Padovani, both of San Diego, Calif., assignors to Qualcomm Incorporated, San Diego, Calif.
Filed Jun. 16, 1995, Ser. No. 490,694
Int. Cl.[6] H04B *15/00;* H04K *1/00;* H04L *27/30*
U.S. Cl. 375—200 21 Claims

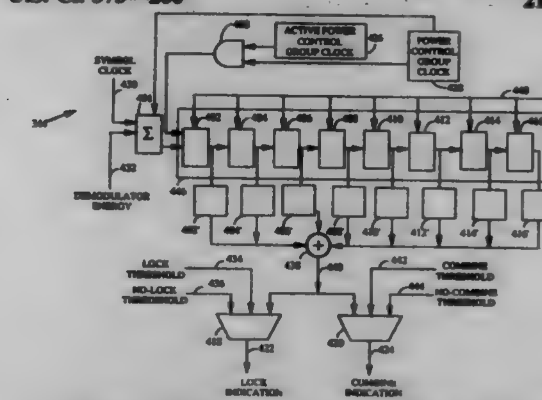

1. A method of determining a signal strength of an incoming signal in a system receiving variable rate data wherein said incoming signal is comprised of a series of frames, each frame having a corresponding unknown data rate, each frame comprised of a plurality of data segments wherein the number of said data segments containing data in each frame depends upon said corresponding unknown data rate, said corresponding unknown data rate may correspond to one of at least a highest data rate and a lowest data rate, said method comprising the steps of:
receiving a first energy value corresponding to a first one of said data segments; and
summing said first energy value with a previously accumulated total if said first one of said data segments corresponds to a data segment containing dàta at said lowest data rate to produce an estimate of said signal strength.

5,703,903
METHOD AND APPARATUS FOR ADAPTIVE FILTERING IN A HIGH INTERFERENCE ENVIRONMENT
Scott David Blanchard; Kurt Albert Kallman, both of Mesa, and William Alexander Bucher, Tempe, all of Ariz., assignors to Motorola, Inc., Schaumburg, Ill.
Filed Jul. 31, 1995, Ser. No. 509,684
Int. Cl.[6] H04B *1/10*
U.S. Cl. 375—232 15 Claims

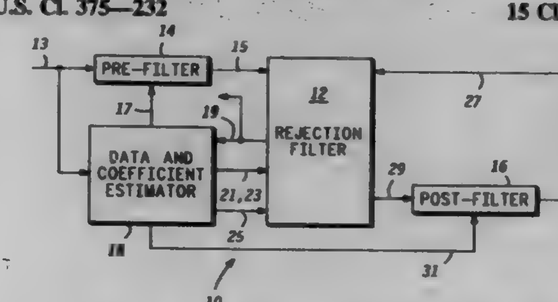

1. An adaptive filter apparatus for removing interfering signals from an unfiltered signal, the adaptive filter apparatus comprising:
a pre-filter for receiving pre-filter linear tap weights and the unfiltered signal and generating a pre-filtered signal therefrom;
a rejection filter coupled to the pre-filter, the rejection filter for receiving the pre-filtered signal, rejection filter linear and decision tap weights, data decisions, and a post-filter signal, removing the interfering signals and canceling distortion, and generating a filtered signal and delayed data decisions;
a post-filter coupled to the rejection filter, the post-filter for receiving post-filter decision tap weights and the delayed data decisions and generating the post-filter signal therefrom; and
a data and coefficient estimator coupled to the pre-filter, to the rejection filter, and to the post-filter, the data and coefficient estimator for receiving the filtered signal and the unfiltered signal and generating the data decisions, the rejection filter linear and decision tap weights and the pre-filter linear tap weights.

5,703,904
IMPULSE NOISE EFFECT REDUCTION
Ehud Langberg, Ocean, N.J., assignor to Globespan Technologies, Inc., Red Bank, N.J.
Filed Dec. 29, 1995, Ser. No. 586,008
Int. Cl.[6] G06F *17/10;* H04B *1/10*
U.S. Cl. 375—232 27 Claims

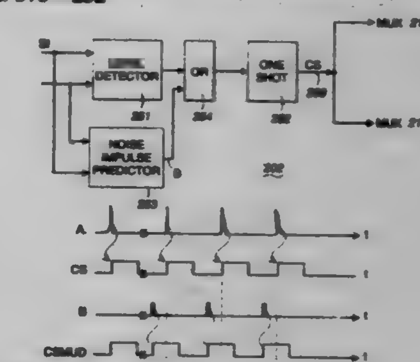

1. A receiver comprising:
an input terminal for receiving input signals;
means coupling an adaptive filter means to said input terminal, said adaptive filter means being normally adjustable as a function of the signals received at said input terminal;
detector means for sensing the amplitude of the input signals received at said input terminal and comparing the amplitude to a threshold level for producing a control signal having first value when the amplitude of the input signal is below the threshold level and having a second value when the amplitude of the input signal exceeds the threshold level;
means responsive to said control signal coupled to said adaptive filter means for preventing adjustment of said adaptive filter means when said control signal has said second value; and
means responsive to the expected occurrence of an input signal exceeding the threshold level for producing a control signal coupled to said adaptive filter means for preventing adjustment of said adaptive filter means for a first period of time preceding the expected occurrence of a signal exceeding the threshold level and a second period of time following the expected occurrence of the signal exceeding the threshold level.

5,703,905
MULTI-CHANNEL TIMING RECOVERY SYSTEM
Ehud Langberg, Ocean, N.J., assignor to Globespan Technologies, Inc., Red Bank, N.J.
Filed Feb. 16, 1996, Ser. No. 602,944
Int. Cl.[6] H03H *7/30;7/40*
U.S. Cl. 375—232 25 Claims

1. An N-channel receiver system comprising:

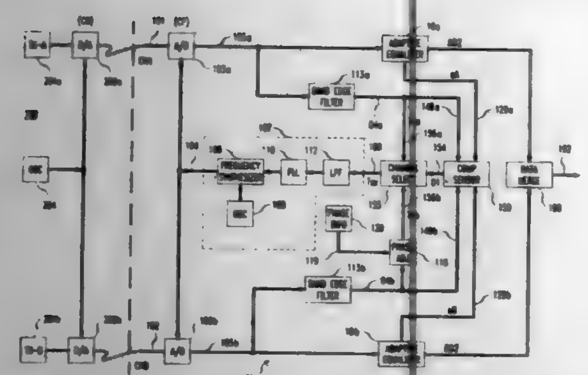

N input means, one input means per channel, for receiving transmitted signals, where N is an integer greater than one;
a signal responsive means, coupled to each one of the N input means for producing N separate timing signals, one timing signal per receiver channel, indicative of the frequency and phase of the signal received at its input means;
an adjustable clocking circuit having an input and an output for producing sampling signals at its output which are responsive to timing signals applied to its input;
a controllable gating means having N inputs and an output;
means for coupling each one of said N separate timing signals to a different one of said N inputs of said controllable gating means; and
means coupling the output of said controllable gating means to the input of said adjustable clocking circuit for selectively applying a selected one of the timing signals to the input of the adjustable clocking circuit.

5,703,906
SYSTEM FOR ASSESSING STOCHASTIC PROPERTIES OF SIGNALS REPRESENTING THREE ITEMS OF MUTUALLY ORTHOGONAL MEASUREMENT INFORMATION
Francis J. O'Brien, Jr., Newport; Chung T. Nguyen, Bristol, and Sherry E. Hammel, Little Compton, all of R.I., assignors to The United States of America as represented by the Secretary of the Navy, Washington, D.C.
Filed Jan. 17, 1996, Ser. No. 605,292
Int. Cl.[6] H04L *27/06*
U.S. Cl. 375—316 **6 Claims**

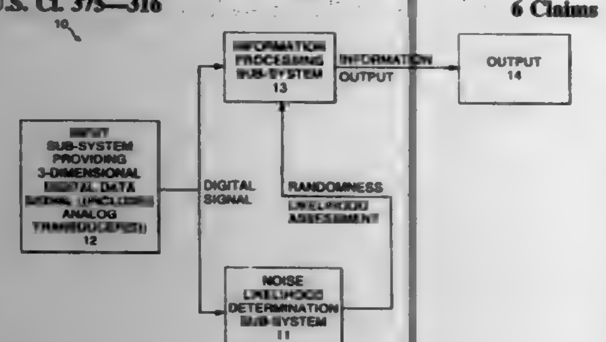

1. A signal processing system comprising:
means, including a transducer means, for receiving an analog signal which includes an information component and a noise component and for processing the analog signal to provide a digital signal comprising sample point measurements representing three mutually orthogonal items of measurement information, said sample point measurements being generated for a series of symbolic, three-dimensional spatial apertures relative to a symbolic three-dimensional spatial reference system;
an information processing sub-system for receiving said digital signal and for processing it to extract said information component;
a noise likelihood determination sub-system for receiving said digital signal and for generating a random noise assessment that the digital signal comprises random noise, the noise likelihood determination sub-system controlling the information processing sub-system in response to the random noise assessment, the random noise assessment being further generated in response to a nearest-neighbor distance deviation assessment generated in response to nearest-neighbor ones of the sample points in comparison with distances of the most direct linear spans across the symbolic three-dimensional reference space between a like number of nearest-neighbor reference points that are randomly distributed, the nearest-neighbor distance deviation further being generated for a plurality of selected sample point populations, each such selected population comprising a plurality of "N" sample point measurements, the random noise assessment further being generated in response to a standard significance test in connection with the nearest-neighbor distance deviation assessments generated for said populations;
said noise likelihood determination sub-system further including reference point distance determination means for generating an expected average distance value μ_r between reference points within a corresponding selected symbolic three-dimensional reference spatial region containing a sample point population as

$$\mu_r = 0.5540\,\rho^{-\left(\frac{1}{3}\right)}$$

where "ρ" represents the three-dimensional spatial density of reference points in the selected region;
said noise likelihood determination sub-system still further including sample point distance determination means for generating an average nearest-neighbor sample point distance value as

$$\bar{r} = \frac{1}{N}\left[\min(d_{1,j}) + \min(d_{2,j}) + \ldots + \min(d_{N,j})\right]$$

where "$\min(d_{ij})$" corresponds to a minimum distance of such most direct lineal span across the symbolic three-dimensional reference space between sample points identified by indices "i" and "j" ; and
said noise likelihood determination subsystem yet further including nearest-neighbor distance deviation assessment generating means for generating the nearest-neighbor distance deviation assessment value as

$$Z = \frac{\bar{r} - \mu_r}{\sigma_r}$$

where

$$\sigma_r = \frac{\sigma}{\sqrt{N}}.$$

5,703,907
METHOD FOR DATA COMPRESSION
David C. James, Marco Island, Fla., assignor to The James Group, Naples, Fla.
Division of Ser. No. 30,741, Mar. 12, 1993, Pat. No. 5,533,051.
This application Jun. 3, 1996, Ser. No. 650,119
Int. Cl.[6] H04B *1/66*
U.S. Cl. 375—240 **4 Claims**

1. A method of compressing data from a stream of electrically encoded binary data using a direct bit manipulation method, comprising the steps of:
A) dividing said stream of binary data into a plurality of input words;
B) defining a plurality of ranges;
C) determining the range in which each of the words fall;

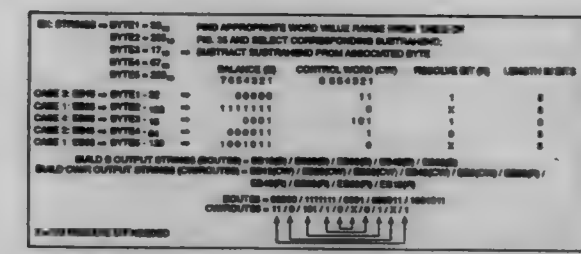

D) for each determination made in step C, converting each word into a balance value and assigning a control word and a resolve word to each said balance value, wherein the balance value, control word, and resolve word uniquely define the value of their associated input word.

5,703,908
FIXED REFERENCE SHIFT KEYING MODULATION FOR MOBILE RADIO TELECOMMUNICATIONS
Richard J. Mammone, Bridgewater, N.J.; Kevin Farrell, Milford, Conn., and Brian Freeman, Howell, N.J., assignors to Rutgers University, Piscataway, N.J.
Continuation of Ser. No. 133,719, Oct. 8, 1993, abandoned.
This application Dec. 14, 1994, Ser. No. 356,019
Int. Cl.[6] H04L *27/10*
U.S. Cl. 375—278 **16 Claims**

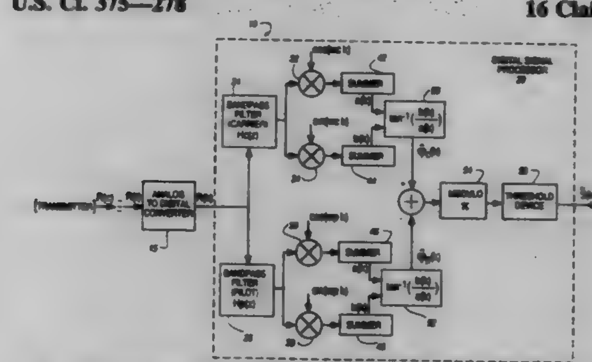

11. A receiver for receiving communications signal, the receiver including:
means for receiving a transmitted tone signal and a phase modulated carrier wave wherein the tone signal is within the coherence band of the phase modulated carrier wave; and
means for separating the tone signal and phase modulated carrier wave and means for estimating the instantaneous phase of the tone signal and phase modulated carrier wave to obtain a measurement of the relative phase between the phase modulated carrier wave and the tone signal.

5,703,909
PROGRAMMABLE VOLTAGE CONTROLLED ATTENUATOR
Yi Fang, North Richland Hills, Tex.; Cesar Carralero, Hialeah, Fla., and Mark McEwen, Roanoke, Tex., assignors to Motorola, Inc., Schaumburg, Ill.
Division of Ser. No. 380,271, Jan. 30, 1995, Pat. No. 5,586,146.
This application Aug. 16, 1996, Ser. No. 698,837
Int. Cl.[6] H04L *27/04*
U.S. Cl. 375—295 **9 Claims**

1. An integrated biasing circuit for a voltage controlled attenuator (VCA), comprising:
a bias generator section receiving a slope select input voltage having first and second levels and an attenuation control voltage;
a bandgap reference located within the bias generator section and providing a reference voltage;

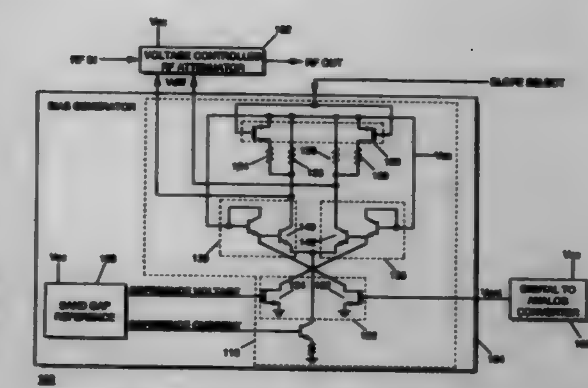

a variable resistive load located within the bias generator section and responsive to the slope select input voltage having first and second levels and providing first and second load impedances respectively;
a variable current sink located within the bias generator section and responsive to the attenuation control voltage and the reference voltage; and
said first and second load impedances and said variable current sink providing first and second differential voltage swings to the VCA.

5,703,910
DIGITAL RADIO RECEIVER
Marc Marie Ghislain Durvaux, Montigny-Le-Tilleul, and Raphael Paul Claude Cassiers, Brussels, both of Belgium, assignors to Alcatel N.V., Amsterdam, Netherlands
Continuation of Ser. No. 136,806, Oct. 14, 1993, abandoned.
This application Sep. 30, 1996, Ser. No. 727,175
Claims priority, application European Pat. Off., Oct. 16, 1992, 92203181
Int. Cl.[6] H03D *3/00;* **H03K** *9/06*
U.S. Cl. 375—322 **20 Claims**

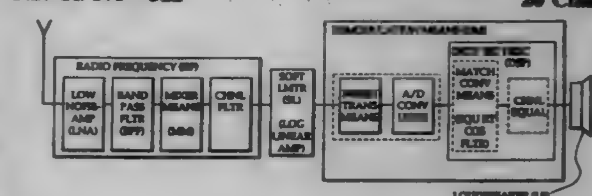

1. A radio receiver wherein a digital signal is recovered from a received signal corresponding to a transmitted signal generated in a transmitter by angle-modulating a carrier signal with an analog signal converted from said digital signal and occupying a predetermined frequency band, said receiver including:
filter means (BPF) attenuating that part of said received signal outside said frequency band and so deriving an intermediate input signal;
a radio receiver limiting amplifier (SL) amplifying said intermediate input signal to provide a resulting intermediate output signal having an amplified amplitude which remains smaller than a limit value; and
demodulation means (DM) recovering said digital signal from said intermediate output signal with a bit error rate below a predetermined error value if the received signal level falls within a predetermined dynamic range;
characterized in that said radio receiver limiting amplifier (SL) has an input-output characteristic which is substantially linear for said intermediate input signal if said intermediate input signal has an amplitude smaller than a predetermined value such that said intermediate input signal having an amplitude smaller than said predetermined value is treated linearly up to said demodulation means, and said demodulation means recovers said digital signal from said intermediate output signal with said bit error rate below said predetermined error value, and wherein said radio receiver limiting amplifier has

an input-output characteristic which strives with a decreasing gain towards said limit value for said intermediate input signal if said intermediate input signal has an amplitude larger than said predetermined value such that said intermediate input signal having an amplitude larger than said predetermined value is treated non-linearly up to said demodulation means, and performance degradation in said demodulation means recovering said digital signal from said intermediate output signal is compensated by said intermediate input signal having an amplitude larger than said predetermined value being demodulated with less errors with said bit error rate remaining below said predetermined error value, each said intermediate input signal corresponding to a received signal having said received signal level within said dynamic range.

5,703,911
DECODING METHOD FOR TRELLIS CODES WITH LARGE FREE DISTANCES
Mao-Chao Lin, Yung-Ho, and Jia-Yin Wang, Taipei, both of Taiwan, assignors to Chung-Chin Chen, Alexandria, Va.
Filed Aug. 17, 1995, Ser. No. 516,217
Int. Cl.^{6} H03M *13/12;* **H04L** *1/00*
U.S. Cl. 375—341 **11 Claims**

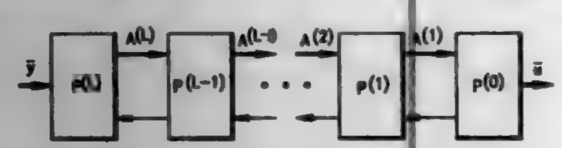

1. A decoding method for a trellis code T of which the encoding can be implemented by first using an encoder of a binary trellis code $C^{(1)}$ to encode an r-bit message $\tilde{u}(t)$ into an intermediate binary m-tuple $\tilde{v}^{(1)}(t)$ at a t-th time unit which is sequentially converted into binary m-tuples $\tilde{v}^{(2)}(t), \ldots, \tilde{v}^{(L)}(t)$ and a signal point $\tilde{v}^{(L+1)}(t)$ in a signal space Ω through L ($L \geqq 2$) processors, comprising the decoding steps of:

(a) at a $(t+\Lambda^{(1)}+\ldots+\Lambda^{(L)})$-th time unit, a processor $P^{(L)}$ determining a set $T_M^{(L)}(t+\Lambda^{(1)}+\ldots+\Lambda^{(L-1)})$ which consists of 2^m metrics for the 2^m possible values of $\tilde{v}^{(L)}(t+\Lambda^{(1)}+\ldots+\Lambda^{(L-1)})$, based on part of the set $\{y(t+i): i \leqq \Lambda^{(1)}+\ldots+\Lambda^{(L)}\}$ and part of the set $\{\tilde{v}^{(L)}(t-j): j \geqq \lambda\}$; feeding the metric set $T_M^{(L)}(t+\Lambda^{(1)}+\ldots+\Lambda^{(L-1)})$ into a processor $P^{(L-1)}$; wherein $y(t+i)$ is a received symbol to be decoded, $\Lambda^{(1)}, \ldots, \Lambda^{(L)}$ are nonnegative constants and λ is a truncation length to be used in decoding $C^{(1)}$;

(b) for $l=L-1, L-2, \ldots, 1$, a processor $P^{(l)}$ determining a set $T_M^{(l)}(t+\Lambda^{(1)}+\ldots+\Lambda^{(l-1)})$ which consists of 2^m metrics for the 2^m possible values of $\tilde{v}^{(l)}(t+\Lambda^{(1)}+\ldots+\Lambda^{(l-1)})$ based on part of $\{T_M^{(l+1)}(t+i): i \leqq \Lambda^{(1)}+\ldots+\Lambda^{(l)}\}$ and part of the set $\{\tilde{v}^{(l)}(t-j): j \geqq \lambda\}$; feeding the metric set $T_M^{(l)}(t+\Lambda^{(1)}+\ldots+\Lambda^{(l-1)})$ into a processor $P^{(l-1)}$; wherein $\Lambda^{(l)}$ is a nonnegative constant;

(c) a processor $P^{(0)}$ recovering the transmitted symbol $\tilde{u}(t-\lambda+1)$ and $\tilde{v}^{(1)}(t-\lambda+1)$ by applying the Viterbi decoding algorithm to the trellis of $C^{(1)}$ and using part of the set $\{T_M^{(1)}(t-i): i \geqq 0\}$; feeding back the recovered $\tilde{v}^{(1)}(t-\lambda+1)$ to $P^{(1)}$;

(d) for $l=1,2, \ldots, L-1$, $P^{(l)}$ processing the set $\{\tilde{v}^{(l)}(t-j): j \geqq \lambda-1\}$ and determining $\tilde{v}^{(l+1)}(t-\lambda+1)$ which is then fed back to $P^{(l+1)}$.

5,703,912
CLOCK-RECOVERY DEVICE HAVING CASCADED RESONANCE AMPLIFIERS
Zhigong Wang, Umkirch, and Manfred Berroth, Neuenburg, both of Germany, assignors to Fraunhofer-Gesellschaft Zur Forderung der Angewandten Forschung e.V., Germany
PCT No. PCT/DE94/01044, § 371 Date May 13, 1996, § 102(e) Date May 13, 1996, PCT Pub. No. WO95/14339, PCT Pub. Date May 26, 1995
PCT Filed Sep. 8, 1994, Ser. No. 646,236
Claims priority, application Germany, Nov. 13, 1993, 43 38 873.6
Int. Cl.^{6} H04L *7/00*
U.S. Cl. 375—354 **13 Claims**

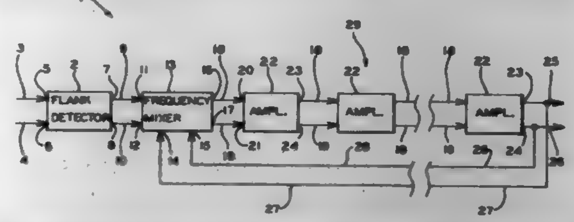

1. An apparatus for clock recovery from an alternating-voltage-carrying input signal which is formed from a digital data signal, said apparatus comprising a frequency mixer, said frequency mixer having first and second inputs and first and second outputs, said first input supplied with a signal that is assigned the clock frequency of an alternating-voltage-carrying input signal, and a filter and amplifier means for amplifying a narrow-band frequency range of an output signal of said frequency mixer, said filter and amplifier means including a filter and amplifier element having a high overall integrity, a feedback line transmitting an output signal of said filter and amplifier means to said second input of said frequency mixer, said filter and amplifier means including at least two series-wired filter and amplifier elements which comprise resonance amplifiers having tank circuits with inductances of monolithically integrated design, said resonance amplifiers having a low integrity as compared to the overall integrity of said filter and amplifier means, whereby the filter and amplifier means has high overall integrity and is formed of the cascaded resonance amplifiers, and is suited for amplification of a narrow-band frequency range of the output signal of the frequency mixer.

5,703,913
TIMING SIGNAL GENERATOR
Yuuri Yamamoto, Yokohama; Kenichi Takahashi, Kawasaki; Hiroshi Ohnishi, Tokyo; Yoshinori Kunieda, Kawasaki, and Naoki Matsubara, Tokyo, all of Japan, assignors to Matsushita Electric Industrial Co., Ltd., Osaka, Japan
Division of Ser. No. 417,528, Apr. 6, 1995, Pat. No. 5,550,867, which is a division of Ser. No. 77,586, Jun. 17, 1993, Pat. No. 5,426,669. This application Jul. 19, 1996, Ser. No. 684,442
Claims priority, application Japan, Jun. 19, 1992, 4-160662; Jun. 26, 1992, 4-168837; Jan. 20, 1993, 5-7247; Feb. 5, 1993, 5-18378
Int. Cl.^{6} H04L *7/00*
U.S. Cl. 375—354 **8 Claims**

1. A timing signal generator comprising:
means for demodulating an input modulated signal into first and second baseband signals having a quadrature relation with each other;
means for converting the first and second baseband signals into angle data representing a phase;
means for calculating a difference between the phase represented by the current angle data and the phase represented by the previous angle data which precedes the current angle data by a 1-symbol interval, and outputting data representative of the calculated phase difference;
means for determining which of predetermined divided regions contains a point corresponding to the calculated difference data;

means for converting the output data of the calculating means into a binary reference signal in response to which of the predetermined divided regions contains the point corresponding to the calculated difference data; and
means for generating a symbol timing signal in synchronism with the binary reference signal.

5,703,914
CLOCK RECOVERY CIRCUIT EMPLOYING DELAY-AND-DIFFERENCE CIRCUIT AND PULSE-SEQUENCE DETECTION
Seizo Nakamura, Tokyo, Japan, assignor to Oki Electric Industry Co., Ltd., Tokyo, Japan
Filed Jul. 27, 1995, Ser. No. 508,045
Claims priority, application Japan, Jul. 29, 1994, 6-178693
Int. Cl.^{6} H04L *7/00*
U.S. Cl. 375—355 **22 Claims**

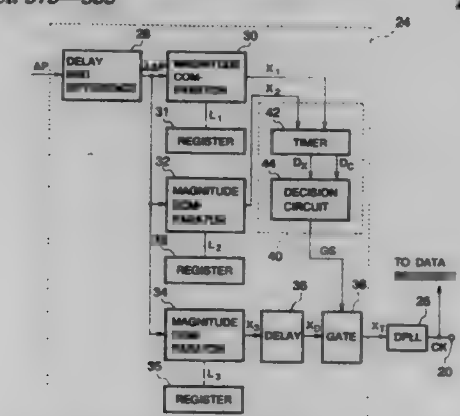

1. A clock recovery circuit for recovering a clock signal from an input signal that follows trajectories which, when superimposed, form an eye pattern, comprising:
a delay-and-difference circuit for receiving said input signal, delaying said input signal by a certain first time to obtain a delayed signal, and taking a difference between said input signal and said delayed signal to obtain a differential signal;
a plurality of comparators coupled to said delay-and-difference circuit, for comparing said differential signal with a corresponding plurality of different levels, and generating respective pulse signals when said differential signal matches said levels;
a gate-signal generating circuit coupled to said comparators, for detecting timing relationships among said pulse signals, and activating a gate signal for a certain second time responsive to certain sequences of said pulse signals and to said timing relationships;
a delay circuit coupled to one of said comparators, for delaying the pulses generated by said one of said comparators by a certain third time to obtain delayed pulses;
a gate circuit coupled to said delay circuit, for outputting said delayed pulses as timing pulsed when said gate signal is active; and
a phase-locked loop coupled to said gate circuit, for generating said clock signal and locking said clock signal in phase to said timing pulses.

5,703,915
TRANSMISSION SYSTEM AND MULTIPLEXING/DEMULTIPLEXING EQUIPMENT INVOLVING A JUSTIFIABLE BIT STREAM
Alain Vergnes, Corbeil Essonnes, and Patrick Albert, Maisons Alfort, both of France, assignors to Lucent Technologies Inc., Murray Hill, N.J.
Filed Sep. 8, 1995, Ser. No. 526,018
Claims priority, application France, Sep. 13, 1994, 94 10909
Int. Cl.^{6} H04J *3/06;* **H04L** *7/04*
U.S. Cl. 375—371 **6 Claims**

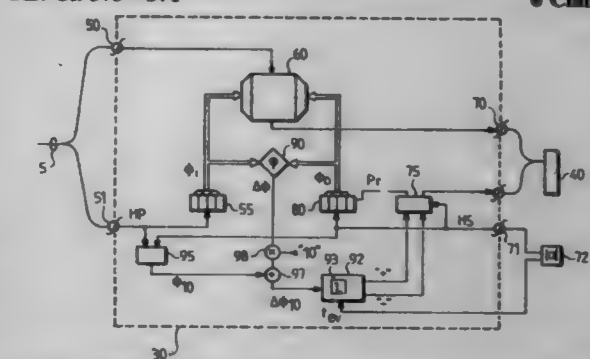

1. Transmission system which involves data transmitted at a first rate and a justifiable bit stream transmitted at a second rate, which system has
an access for input data formed by bits produced at a first clock rate,
an access for producing at the second clock rate said stream in which bits can be inserted or deleted,
a buffer memory,
write means for writing at a write location of the buffer memory the data coming from said access for data coming in at the first rate,
reading means for reading from a read location of the buffer memory the data stored at the second rate and for forming said stream,
location comparing means for producing a comparison code of the read location codes with the write location codes,
justification means for inserting and/or deleting bits in the outgoing data stream as a function of the comparison code,
characterized in that the comparing means have:
an interpolation element for producing intermediate values between variations of the comparison code,
and in that the justification means have:
a decision circuit which has a decision threshold provided for controlling a justification and whose value may be one of the intermediate values.

5,703,916
APPARATUS AND METHOD FOR LOOSENING A STUCK REACTOR VESSEL STUD
John J. Wilhelm, New Kensington, Pa., and Herman Schemberger, Lune, Germany, assignors to Westinghouse Electric Corporation, Pittsburgh, Pa.
Filed Dec. 1, 1995, Ser. No. 566,033
Int. Cl.^{6} G21C *19/00*
U.S. Cl. 376—260 **23 Claims**

13. For use in association with a nuclear reactor pressure vessel having a vertically-oriented blind bore therein having first threads and defining a cavity at a proximal end of the bore, the bore receiving an upright elongate stud having second threads threadably engaging the first threads and having a proximal end thereof disposed adjacent the cavity, the stud having a predetermined weight and a centrally disposed passage longitudinally therethrough in communication with the cavity, an apparatus for reducing the resistance of the stud to rotation, comprising:
(a) liquid pulsating supply means in communication with the passage for supplying a pulsating liquid into the passage and

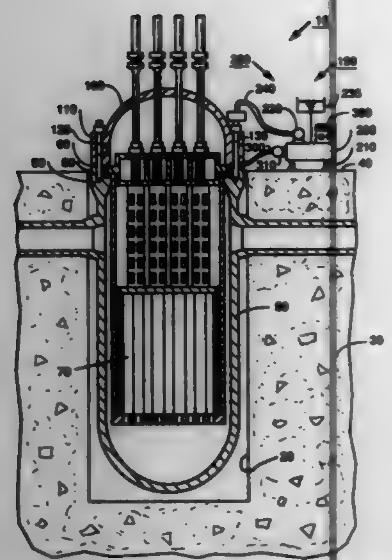

to the cavity, said liquid pulsating supply means including a liquid supply pulsar pump capable of pulsing the liquid;
(b) a support platform connected to said pump for supporting said pump;
(c) liquid suction means in communication with the bore for suctioning the liquid from the bore, said suction means including:
(i) a torus-shaped liquid collection reservoir defining a chamber therein in communication with the bore for collecting the liquid suctioned from the bore; and
(ii) a suction pump in communication with the chamber for generating suction in the chamber, so that the liquid is suctioned from the bore and into the chamber;
(d) a liquid supply reservoir connected to said liquid supply pulsar pump for supplying the liquid to said liquid supply pulsar pump; and
(e) a controller connected to said liquid supply pulsar pump for controllably operating said liquid supply pulsar pump, whereby the liquid in the passage and the cavity is pulsed as the controller controllably operates the pump, whereby intermittent hydraulic force acts against the proximal end of the stud as the liquid in the cavity is pulsed, whereby the stud is lifted a predetermined distance in the bore as the hydraulic force acts against the proximal end of the stud, whereby the weight of the stud on the first threads is reduced and the liquid migrates between the first threads and the second threads as the stud is lifted, whereby the debris residing between the first threads and the second threads loosens as the liquid migrates between the first threads and the second threads, and whereby the stud is capable of being rotated with reduced resistance to rotation as the debris loosens and as the weight of the stud on the first threads is reduced.

5,703,917

CLOSING DEVICE FOR INITIATING COOLING FOR A CORE MELT

Gerhard Hau, Allstadt; Lothar Wistuba, Herzogenaurach, and Josef Hollmann, Schlüsselfeld, all of Germany, assignors to Siemens Aktiengesellschaft, Munich, Germany

Filed Dec. 8, 1995, Ser. No. 569,677

Claims priority, application Germany, Jun. 8, 1993, P 43 19 092.8; Nov. 2, 1993, P 43 37 367.4

Int. Cl.⁶ G21C *9/016*

U.S. Cl. 376—280 **5 Claims**

1. In a nuclear reactor facility having a collecting chamber for a core melt, a coolant tank and a coolant connecting line having an inlet end connected to the coolant tank and an outlet end protruding into the collecting chamber and having an outlet cross section, a closing device at the connecting line opening as a function of temperature for initiating cooling of the core melt, comprising:

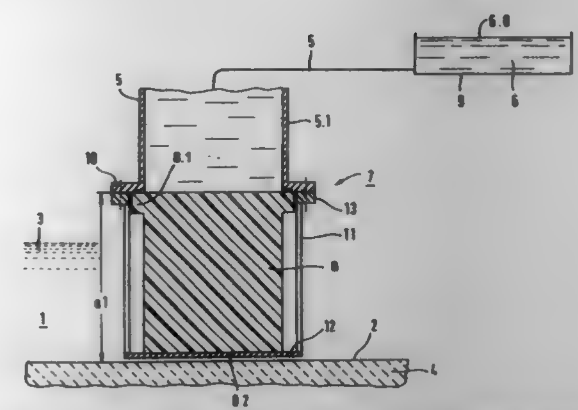

a closing member disposed at the outlet end of the connecting line for normally tightly closing the outlet end;
said closing member having a temperature-dependent opening element for tripping clearance of at least a portion of the outlet cross section of the connecting line upon thermal action by the core melt to direct the coolant from the coolant tank, through the connecting line and into the collecting chamber; and
said opening element being a plastic block which is thermally insulating the coolant, and is corrision-resistant.

5,703,918

MODERATOR MATERIAL FOR NEUTRONS AND USE OF SAID MATERIAL

Pekka Hiismäki, Espoo, and Iiro Auterinen, Helsinki, both of Finland, assignors to RADTEK OY, Espoo, Finland

PCT No. PCT/FI94/00206, § 371 Date Jun. 10, 1996, § 102(e) Date Jun. 10, 1996, PCT Pub. No. WO94/29881, PCT Pub. Date Dec. 22, 1994

PCT Filed May 24, 1994, Ser. No. 571,892

Claims priority, application Finland, Jun. 14, 1993, 932711

Int. Cl.⁶ G21C *5/00;* **G21K** *1/00;* **A61N** *5/10*

U.S. Cl. 376—458 **12 Claims**

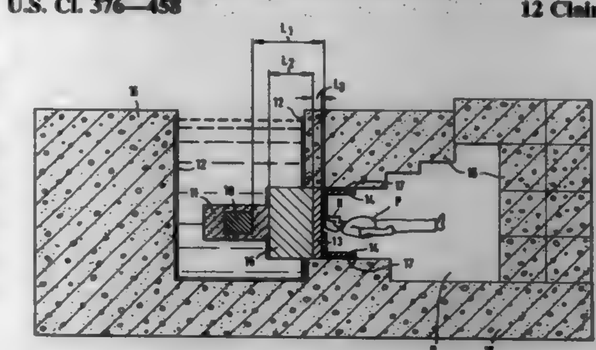

1. Moderator material used for moderation of high-velocity neutrons to epithermal neutrons, said moderator material comprising aluminum fluoride and aluminum metal, as a composite substantially free of pores.

5,703,919

FAIL-SAFE METHOD TO READ A TIMER WHICH IS BASED ON A PARTICULAR CLOCK WITH ANOTHER ASYNCHRONOUS CIRCIT

Joseph A. Bailey, Austin, and Qadeer A. Qureshi, Round Rock, both of Tex., assignors to Advanced Micro Devices, Inc., Sunnyvale, Calif.

Filed Apr. 17, 1996, Ser. No. 633,671

Int. Cl.⁶ G07C *3/02*

U.S. Cl. 377—16 **29 Claims**

1. A timer counter circuit for a computer system, comprising:
a counter clocked by a timer clock;

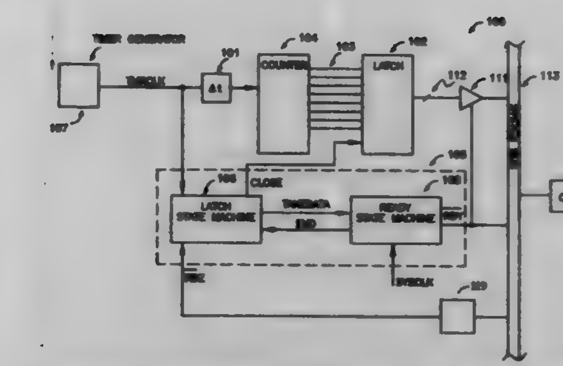

a latch coupled to receive an output from said counter; and
counter control circuitry, including;
a first circuit coupled to control said latch, responsive to a first control signal from said computer system, wherein said first circuit is coupled to be clocked from said timer clock;
a second circuit coupled to said first circuit, wherein said second circuit is coupled to be clocked from a system clock asynchronous to said timer clock; and
wherein said counter control circuitry is configured to provide an indication to said computer system that said computer system may read valid data from said latch.

5,703,920

COMPUTED TOMOGRAPHY APPARATUS WITH IMAGE PRODUCTION USING FOURIER RECONSTRUCTION

Juergen Wohlrab, Forchheim, and Manfred Herbert, Erlangen-Buechenbach, both of Germany, assignors to Siemens Akiengesellschaft, Munich, Germany

Filed Sep. 23, 1996, Ser. No. 717,604

Claims priority, application Germany, Oct. 12, 1995, 195 38 053.3

Int. Cl.⁶ A61B *6/03*

U.S. Cl. 378—4 **4 Claims**

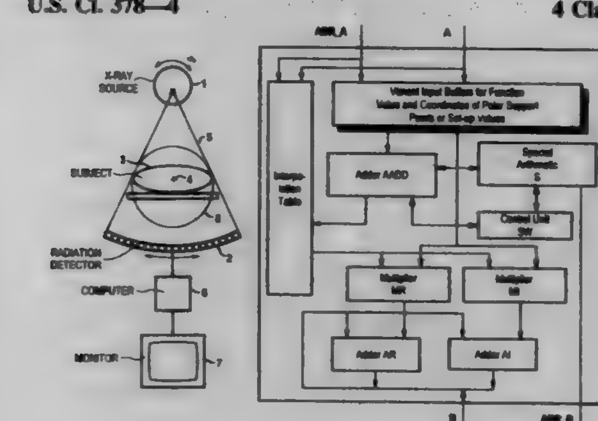

1. A computed tomography apparatus comprising an X-ray source which emits an X-ray fan beam, a radiation detector on which said fan beam is incident after penetrating a subject and which emits measurement data corresponding to said fan beam attenuated by said subject, means for rotating said X-ray source and said radiation detector around said subject to obtain measurement data from a plurality of different angular projections, computer means for reconstructing an image from the measurement data according to a Fourier reconstruction method, and an ASIC in said computer means having computational means for processing a gridding algorithm for forming additional contributions in a Cartesian frequency matrix derived from polar support points.

5,703,921

X-RAY COMPUTED TOMOGRAPHY APPARATUS

Hidehiro Fujita, and Hisashi Tachizaki, both of Tochigiken, Japan, assignors to Kabushiki Kaisha Toshiba, Kawasaki, Japan

Filed May 29, 1996, Ser. No. 654,675

Claims priority, application Japan, May 30, 1995, P7-131664

Int. Cl.⁶ G06F *15/62*

U.S. Cl. 378—4 **15 Claims**

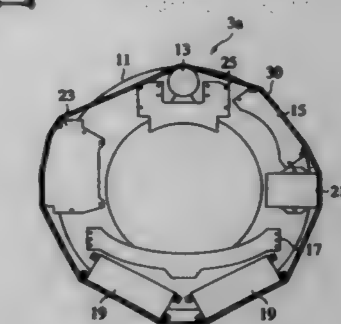

1. An X-ray computed tomography apparatus comprising:
an X-ray computed tomography gantry for irradiating X-ray to an object to be inspected and for producing a sectional image signal relating to said object, said X-ray computed tomography gantry comprising a rotating base having a shape of disc, a plurality of units fixed on one side of said rotating base for processing X-ray, and fixing means for integrally fixing said plurality of units at portions thereof apart from portions thereof fixed on said rotating base;
control means for controlling movements of said X-ray computed tomography gantry and for image processing said sectional image signal to display the image; and
a couch for carrying said object thereon.

5,703,922

THERAPY APPARATUS WITH A RADIATION SOURCE

Manfred Rattner, Grossenseebach, Germany, assignor to Siemens Aktiengesellschaft, Munich, Germany

Filed Jun. 7, 1996, Ser. No. 660,444

Claims priority, application Germany, Jun. 7, 1995, 195 20 748.3

Int. Cl.⁶ A61N *5/10*

U.S. Cl. 378—65 **22 Claims**

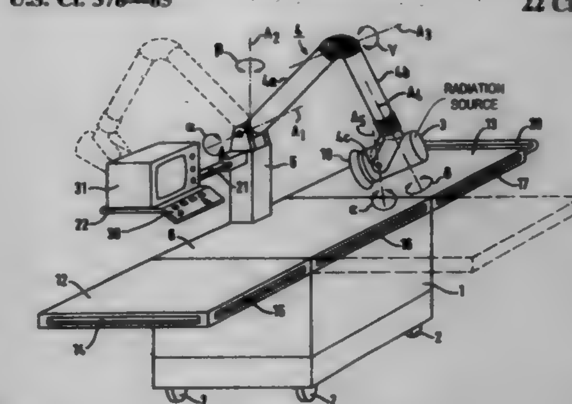

1. A therapy apparatus for use in a treatment room having a floor, comprising:
a base part supportable on the floor of the treatment room;
means for administering therapy including a radiation source mounted on said base part and a plurality of electrical components for operating said radiation source contained inside said base part;
a patient support assembly; and
an upper part attached to and covering said base part forming at least a part of said patient support assembly.

5,703,923

THREE DIMENSIONAL IMAGING SYSTEM USING LASER GENERATED ULTRASHORT X-RAY PULSER

Michael J. Bardash, Brooklyn, N.Y., assignor to QEL Inc., Brooklyn, N.Y.

Division of Ser. No. 285,821, Aug. 4, 1994, Pat. No. 5,602,894. This application Nov. 8, 1996, Ser. No. 748,501

Int. Cl.⁶ G01N *23/201*

U.S. Cl. 378—87 **8 Claims**

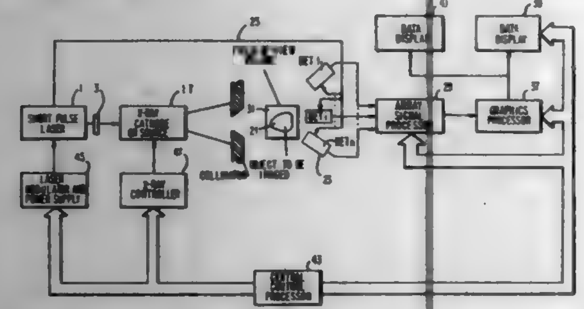

1. An apparatus for imaging the interior of an object located in a field of view volume comprising

a source of a ultra short collimated x-ray pulse emitted at a first time having a predetermined energy spectrum and direction passing through said field of view volume,

a detector array comprising a plurality of x-ray detectors each having timing and detection means to enable detection at a second time of the intensity of x-ray pulses Compton scattered by said object, wherein said second time follows said first time,

array signal processor means for receiving from said source of said x-ray pulse a signal indicative of said first time and for receiving from said detector array signals indicative of said second time and said intensity signal from said detector array and for transmitting image data indicative of the location and density of the scattering center producing the scattered radiation,

graphics processor means for receiving said image data from said array signal processor, wherein said image data may be stored and/or displayed on data display or data storage means.

5,703,924

X-RAY TUBE WITH A LOW-TEMPERATURE EMITTER

Erich Hell, Erlangen; Helmut Kuhn, Wessenbrunn, and Mathias Hoernig, Erlangen, all of Germany, assignors to Siemens Aktiengesellschaft, Munich, Germany

Filed Apr. 4, 1996, Ser. No. 627,999

Claims priority, application Germany, Apr. 7, 1995, 195 13 290.4

Int. Cl.⁶ H01J *35/06*

U.S. Cl. 378—136 **6 Claims**

1. An x-ray tube comprising:

an anode at an anode potential, said anode having an incident surface with a surface normal;

an electron emitter which emits an electron beam which strikes said incident surface of said anode in a focal spot, thereby producing an x-ray beam emanating from said focal spot and ions, said x-ray beam having a central ray, said electron emitter having an electron-emitting surface and said electron emitter comprising, at least in a region of said electron-emitting surface, electron-emitting material having a lower electron affinity than tungsten;

said electron emitter being disposed in a region subject to permeation by said ions:

means for protecting said region of said electron-emitting surface from being struck by said ions consisting of a diaphragm at anode potential disposed between said electron emitter and said anode having an aperture through which said electron beam passes, said diaphragm being disposed perpendicularly relative to said electron beam; and

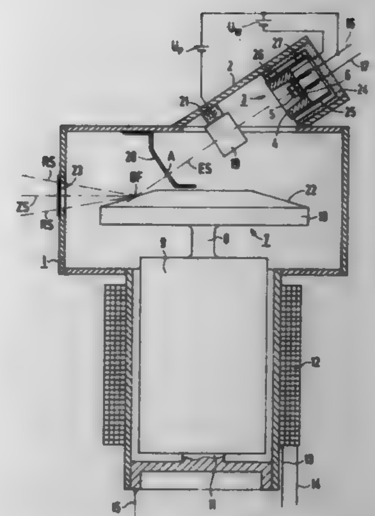

said electron emitter being disposed relative to said anode so that said electron beam is incident on said focal spot at a first angle relative to said surface normal which is greater than 45°, and so that said central ray of said x-ray beam is disposed at a second angle relative to said surface normal which is substantially equal to said first angle.

5,703,925

X-RAY CASSETTE SUPPORT APPARATUS

Howard Stanley Wright, New Plymouth, New Zealand, assignor to Howard Wright Limited, New Plymouth, New Zealand

Filed Aug. 9, 1996, Ser. No. 695,852

Claims priority, application New Zealand, Aug. 10, 1995, 272755

Int. Cl.⁶ G03B *42/02*

U.S. Cl. 378—181 **17 Claims**

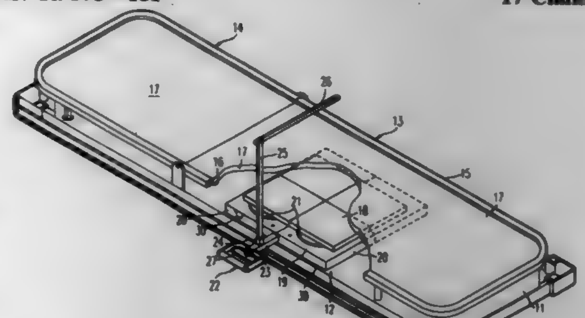

1. A support for an x-ray cassette comprising a sliding surface which, in use, is locatable beneath a patient support surface, an x-ray cassette support surface, said support surface being slidable in more than one direction over the sliding surface and a handle for manipulation of the cassette support surface over the sliding surface.

5,703,926

X-RADIATOR WITH CONSTRAINT-COOLED ROTATING ANODE

Norbert Bischof, Roethenbach, Germany, assignor to Siemens Aktiengesellschaft, Munich, Germany

Filed Mar. 21, 1997, Ser. No. 821,440

Claims priority, application Germany, Mar. 29, 1996, 196 12 698.3

Int. Cl.⁶ H01J *35/10*

U.S. Cl. 378—200 **14 Claims**

1. An X-ray radiator comprising:

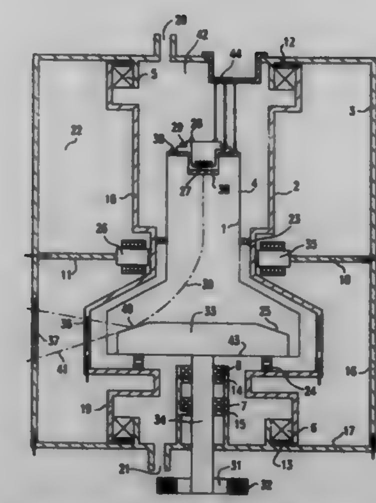

an X-ray tube having a vacuum housing with an anode and a cathode rigidly mounted in said vacuum housing, said cathode emitting an electron beam;

a coolant container surrounding said X-ray tube and filled with a coolant;

a radiation protection housing surrounding said coolant container;

means for mounting said X-ray tube and said coolant container in said radiation protection housing for permitting rotation of said X-ray tube and said coolant container relative to said radiation protection housing;

drive means for rotating at least one of said X-ray tube and said coolant container in said radiation protection housing around a rotational axis during operation of said X-ray tube, said X-ray tube emitting an X-ray beam during said operation; and

deflection means, disposed inside said radiation protection housing and mounted stationarily relative to said radiation protection housing, for deflecting said electron beam onto a stationary focal spot on said anode.

5,703,927

SAFETY RING FOR DOUBLE OPEN-ENDED SAMPLE HOLDER CELL FOR SPECTROSCOPIC ANALYSIS

Angelo M. Torrisi, 10 Anpell Dr., Scarsdale, N.Y. 10583, and Roland Urbano, Tuckahoe, N.Y., assignors to Angelo M. Torrisi, Scarsdale, N.Y.

PCT No. PCT/US94/04116, § 371 Date Oct. 13, 1995, § 102(e) Date Oct. 13, 1995, PCT Pub. No. WO94/24547, PCT Pub. Date Oct. 27, 1994

Continuation-in-part of Ser. No. 47,315, Apr. 15, 1993, Pat. No. 5,351,281. This PCT application Apr. 14, 1994, Ser. No. 549,832

Int. Cl.⁶ H05G *1/00*

U.S. Cl. 378—208 **5 Claims**

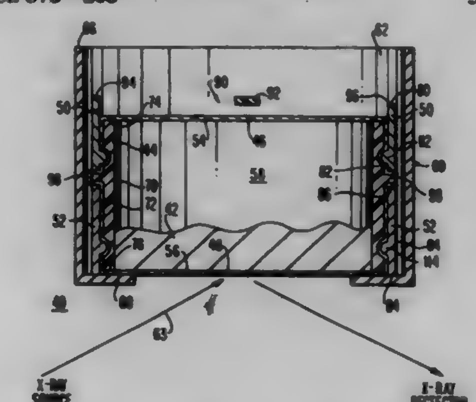

1. A sample holder system for a sample material for X-ray spectroscopic analysis, comprising, in combination,

cell means for containing the sample material and having first and second rims defining opposed first and second open faces, respectively,

a first ring mounted to said cell means at said first open face,

an analytic film secured to said cell means by said first ring across said first open face,

a second ring mounted to said cell means at said second open face, said second ring including a continuous ring wall extending outwardly from said second rim and perpendicular to said second open face, and

a protective film secured to said cell means by said second ring across said second open face,

said continuous ring wall and said protective film defining a compartment adjoining said second open face,

said compartment arranged to receive particles passed from said cell means through said protective film due to the heating of said sample material by X-rays.

5,703,928

PROBE FOR SAMPLING DIFFERENTIAL ELECTROMAGNETIC FIELDS

George G. Galloway, Graford, and Paul R. Siglinger, Weatherford, both of Tex., assignors to Industrial Technology, Inc., Mineral Wells, Tex.

Filed Sep. 26, 1995, Ser. No. 533,844

Int. Cl.⁶ H04M *1/00;* **G01R** *31/08*

U.S. Cl. 379—21 **19 Claims**

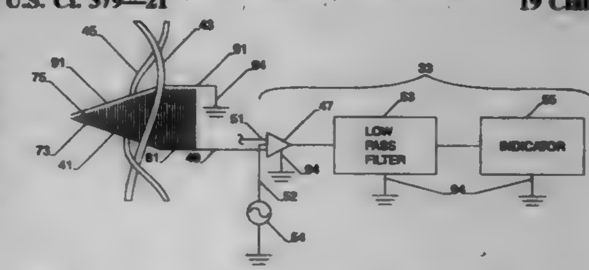

16. A method of sensing a signal in a pair of wires, comprising the steps of:

a) providing a probe having two comb shaped conductors that are separated from each other, the comb shaped conductors having conductive parallel teeth;

b) inserting the probe between the wires in the pair such that the wires are parallel to the conductive teeth;

c) collecting a portion of the signal from the pair of wires with the probe.

5,703,929

WIRELESS-WIRELINE COMMUNICATION SELECTION MECHANISM RESIDENT IN CRAFTSPERSON'S PORTABLE TEST AND COMMUNICATIONS DEVICE

Onofrio Schillaci, Camarillo, and Michael D. Horton, Ojai, both of Calif., assignors to Harris Corporation, Melbourne, Fla.

Continuation of Ser. No. 338,916, Nov. 14, 1994, Pat. No. 5,583,912, which is a continuation-in-part of Ser. No. 235,317, Apr. 29, 1994, Pat. No. 5,521,958. This application Oct. 23, 1996, Ser. No. 735,462

Int. Cl.⁶ H04M *1/24;3/08;11/00*

U.S. Cl. 379—21 **9 Claims**

1. An arrangement for establishing a communication path between a user's portable communication and processing unit, through the operation of which testing of a subscriber line of a telephone network may be conducted by means of a test system that is coupled to said subscriber line and is placed in communication with said user's portable communication and processing unit, said arrangement comprising a transceiver within said user's communication and processing unit which is operative, in response to a user's request for the establishment of a communication path

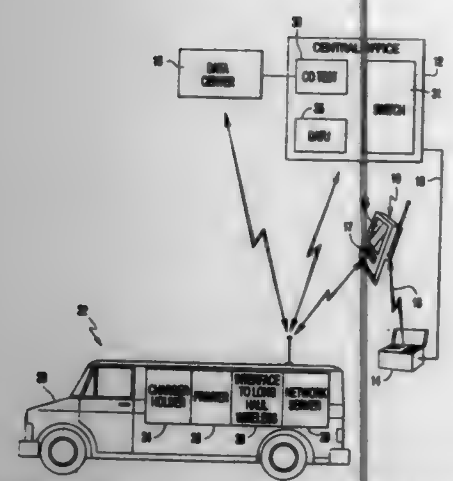

between said user's communication and processing unit and said test system, to establish said communication path between said user's communication and processing unit and said test system by means of one of a plurality of wireless communication systems located between said test system and said user's communication and processing unit.

5,703,930

PERSONAL MOBILE COMMUNICATION SYSTEM WITH CALL BRIDGING

Richard A. Miska, Belle Mead, and William T. Willcock, Rumson, both of N.J., assignors to AT&T Corp., Middletown, N.J.

Continuation of Ser. No. 606,230, Feb. 23, 1996, abandoned, which is a continuation of Ser. No. 424,825, Apr. 19, 1995, abandoned, which is a continuation of Ser. No. 138,887, Oct. 19, 1993, abandoned, which is a continuation of Ser. No. 667,734, Mar. 11, 1991, abandoned. This application Feb. 6, 1997, Ser. No. 796,833

Int. Cl.^{6} H04Q *7/08;7/20;7/24;7/38*

U.S. Cl. 379—57 **3 Claims**

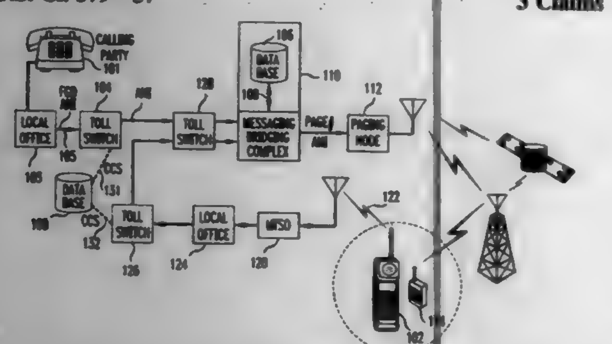

1. A system for completing calls directed to a called party equipped with a personal mobile telecommunications device capable of originating and receiving telephone calls, said telecommunications device having an associated home geographic region, said system comprising

a bridge having first and second inputs for establishing a real time two-way call connection between two separate calls received at said first and second inputs;

a switch for receiving a call from a calling party to a called party;

means responsive to a query generated by said switch in response to said call for determining if said called party is roaming outside of said home geographic region;

means responsive to an output from said determining means indicating that said called party is roaming, for announcing to said calling party placing said call to said called party that said called party is not presently able to receive said call and for receiving a signal generated by said calling party in response to said announcement indicating that the calling party is willing to wait;

means responsive to said signal for causing said switch to connect said call from said calling party to said first bridge input;

means for paging said called party; and

means for connecting a second call originated by said called party from said personal mobile telecommunications device to said second bridge input, so that a real-time two-way call connection is established between said calling party and said called party.

5,703,931

PORTABLE RADIO TELEPHONE WITH IMPULSE MOVEMENT OR SOUND OFF-HOOK PRODUCTION AND SIGNALLING

Nils Erik Vilhelm Martensson, Woking, England, assignor to Nokia Mobile Phones Limited, Espoo, Finland

Continuation of Ser. No. 845,169, Mar. 3, 1992. This application Nov. 24, 1993, Ser. No. 158,182

Claims priority, application United Kingdom, Mar. 6, 1991, 9104707; Mar. 21, 1991, 9105964

Int. Cl.^{6} H04M *11/00*

U.S. Cl. 379—58 **19 Claims**

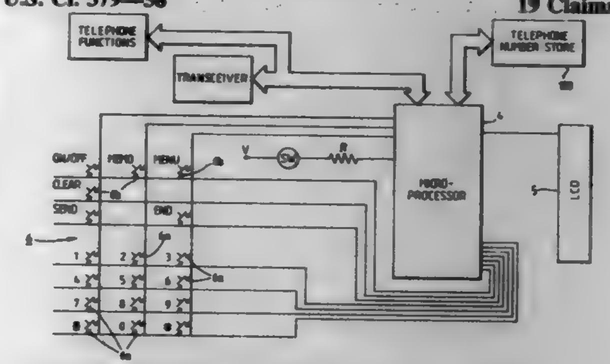

1. A portable telephone comprising:

means for sensing physical disturbance of the telephone, the means for sensing disturbance including an orientation insensitive acceleration switch activated by impulsive accelerative movement of the telephone; and

means, responsive to said disturbance sensing means, for producing an off-hook condition in the portable telephone upon a predetermined impulsive accelerative movement of the telephone.

5,703,932

CELLULAR TELEPHONE WITH BUILT-IN BATTERY AND ANTENNA

Teruo Oda, Gamagouri, Japan, assignor to Nippondenso Co., Ltd., Kariya, Japan

Filed Feb. 28, 1995, Ser. No. 396,435

Claims priority, application Japan, Feb. 28, 1994, 6-30059

Int. Cl.^{6} H04Q *7/20*

U.S. Cl. 379—58 **7 Claims**

1. A cellular telephone for use in an automobile including a cradle having a control circuit receiving power from said automobile, a hands-free microphone and a hands-free speaker, said automobile having an antenna mounted thereon comprising:

a built-in battery;

a generally rectangular case, housing said battery, with a rear surface thereof adapted to be placed on a left hand palm when held by a left hand;

a built-in antenna protruding from a top end of said case;

a groove portion, formed longitudinally between a right hand side and a left hand side on a front surface of said case and running from said top end of said case to a bottom end of said

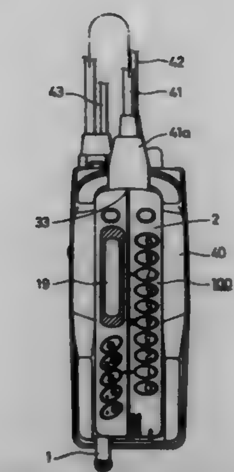

case in a longitudinal direction of said case, to provide hilly portions at right and left side portions of said groove portion;

a speaker formed in said groove portion at a top portion of said case close to said built-in antenna;

a microphone formed in said groove portion at a bottom portion of said case away from said built-in antenna;

operation keys arranged in only two rows along a longitudinal direction on a front surface of said case, said operation keys including

numerical keys of 0 through 9 in one row at a left hand side when said case is held by a left hand with said built-in antenna at a top position, and

function keys having at least keys for transmission and terminating a call at a right hand side of said case, said function keys being disposed on a right hand side of said case in a vicinity of said built-in antenna;

a liquid crystal display, disposed on said front surface of said case on a right hand side of said case on said side of said function keys opposite said built-in antenna and extending in a longitudinal direction on said front surface of said case, for displaying a destination telephone number of a telephone call; and

a switch provided on a rear surface of said case in the vicinity of said built-in antenna for enabling a one touch signal transmission setting, said switch being moveable between right and left side positions to a position for one touch signal transmission setting and to another position for a one touch transmission release operation;

wherein said liquid crystal display is further for displaying an indication of said one touch signal transmission setting when said switch is in said position for said one touch signal transmission setting; and

when said telephone is mounted in said cradle, said one touch signal transmission setting can be confirmed using said liquid crystal display and a telephone call can be placed by actuating one of said numerical keys; and

said telephone is capable of placing and receiving calls using said hands-free microphone and said hands-free speaker when in a hands-free mode and mounted in and connected to said cradle and is capable of placing and receiving calls using said built-in battery and said built-in antenna when held in a palm.

5,703,933

METHOD AND ARRANGEMENT FOR ESTABLISHING A CONNECTION IN A TELECOMMUNICATIONS SYSTEM

Walter Ghisler, Upplands Väsby, Sweden, assignor to Telefonaktiebolaget LM Ericsson (publ.), Stockholm, Sweden

Filed May 10, 1996, Ser. No. 646,532

Claims priority, application Sweden, May 31, 1995, 9501997

Int. Cl.^{6} H04M *11/00*

U.S. Cl. 379—58 **10 Claims**

1. A method of establishing in a telecommunications network (RLL, PSTN) a connection between a first (AB1) and a second (AB2) subscriber apparatus, wherein the telecommunications network includes:

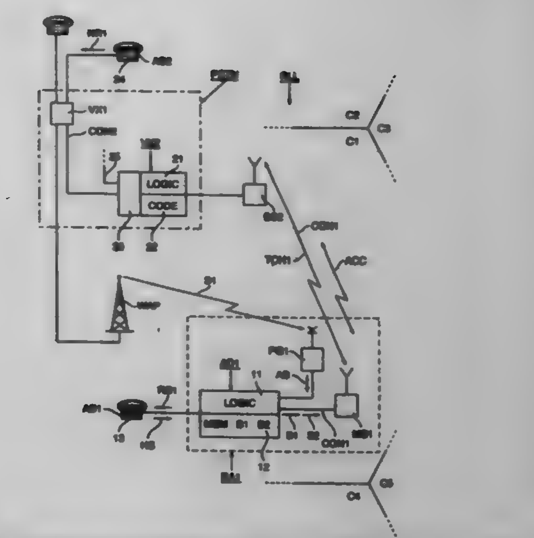

a radio unit (RA1) which includes an essentially stationary radio station (MS1) and a control unit (AD1) connected thereto, said radio unit (RA1) being connected to the first subscriber apparatus (AB1); and

at least one radio base station (BS2) connected to a wirebound part (PSTN) of the telecommunications network;

wherein the establishment of the connection (CON1+CON2) is requested from the first subscriber apparatus (AB1) and the method comprises:

delivering a hook signal (HS) from the first subscriber apparatus (AB1) to the control unit (AD1);

signaling on a signaling channel (ACC) between the essentially stationary radio station (MS1) and the radio base station (BS2) in dependence on the hook signal (HS);

establishing a first connection (CON1) between the first subscriber apparatus (AB1) and the wirebound part (PSTN) of the telecommunications network in dependence on an order transmitted on the signaling channel, including establishing a traffic channel (TCH1) between the essentially stationary radio station (MS1) and the radio base station (BS2);

transmitting a dial tone (RT) from the wirebound part (PSTN) of the telecommunications network to the first subscriber apparatus (AB1), said transmission being effected via the traffic channel (TCH1);

transmitting a subscriber number (NR2) from the first subscriber apparatus (AB1) to the wirebound part (PSTN) of the telecommunications network, said subscriber number (NR2) belonging to the second subscriber apparatus (AB2) and being transmitted via the traffic channel (TCH1);

establishing a second connection (CON2) between the wirebound part (PSTN) of the telecommunications network and the second subscriber apparatus (AB2) in dependence on the subscriber number (NR2); and

interconnecting the two connections (CON1, CON2) in said wirebound part of the telecommunications network (PSTN).

5,703,934

CORDLESS TELEPHONE WITH INTEGRAL CALLER ID DISPLAY

Robert G. Zicker, and John K. Dion, both of Roswell, Ga., assignors to GTE Mobile Communication Service, Atlanta, Ga.

Continuation-in-part of Ser. No. 263,711, Jun. 22, 1994, which is a continuation-in-part of Ser. No. 201,455, Feb. 24, 1994. This application Jun. 2, 1995, Ser. No. 458,537

Int. Cl.^{6} H04M *11/00;1/56;* **H04Q** *7/00*

U.S. Cl. 379—61 **4 Claims**

1. A radiotelephone (RT) set capable of providing information describing an incoming call to a user, said RT set comprising:

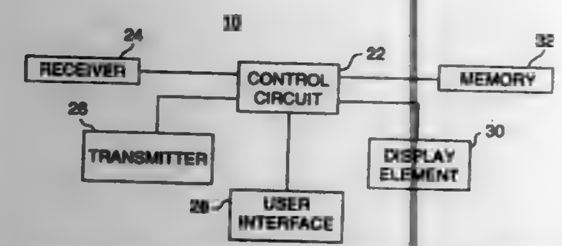

a cordless base station capable of receiving an incoming call conveying description data from a central telephone office, said cordless base station having:
  an interface for establishing data communication between said cordless base station and said central telephone office,
  a convertor configured to convert said description data into a transmittable caller identification (caller ID) message, said caller ID message being formatted according to a cellular transmission protocol, and
  a transmitter configured to transmit said caller ID message to said RT; and
an RT configured to communicate with said cordless base station, said RT having:
  a control circuit configured to control the operation of said RT,
  a receiver connected to said control circuit and configured to receive said caller ID messages,
  a display element connected to said control circuit and configured to display said caller ID message in a readable format, and
  a user interface connected to said control circuit and configured to allow a user to control the operation of said RT.

5,703,935
AUTOMATED TELEPHONE OPERATOR SERVICES

Anousheh Raissyan, Plano, Tex.; Kody Raymond Wood, Micthellville, Md.; Michael Joseph Jacobi, Shellsburg, Iowa; Linda S. King, Washington, D.C.; Lee Chopek Seydel, Iowa City, Iowa; Michele Pauline Torbert, McLean, Va., and Robert Gary Leonard, Plano, Tex., assignors to MCI Communications Corporation, Washington, D.C.

Filed Mar. 29, 1994, Ser. No. 219,577
Int. Cl.^{6} **H04M** *1/64;3/50*
U.S. Cl. 379—88 **15 Claims**

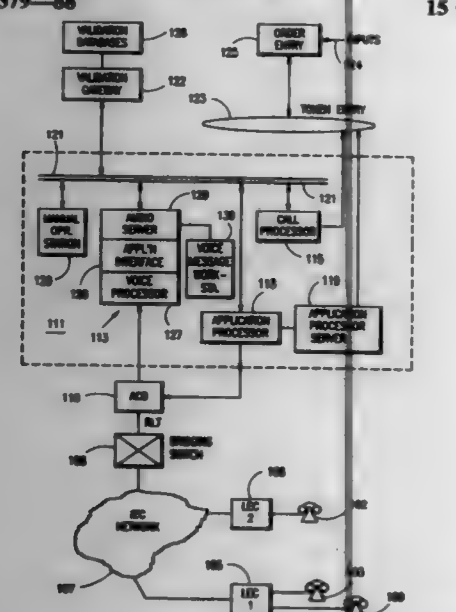

1. A system for automatically processing telephone calls sought to be placed by a caller from a telephone under caller selectable alternative billing options, comprising:
(a) automatic response means for receiving from a network telephone calls for which alternative billing are sought, for processing said calls in accordance with the caller selectable alternative billing options, and for releasing the calls back to the network after processing for call completion, said automatic response means being operative to allow the caller to select from said alternative billing options and to process a selected option and said automatic response means including (i) a voice response portion for accepting call-related inputs and for providing responses thereto, and (ii) a call processing portion interactive with the voice response portion for controlling progression of call processing;
(b) call control means interconnected to the automatic response means for receiving calls from the network whereby each call includes call parameters indicative of a call type, said call control means further examining the call parameters before directing at least one type of calls to said automatic response means; and
(c) database means accessible by the automatic response means for each call processed by said call control means to provide data to said call control means specifying processing features for each alternative billing option, such features being defined for such call by the call parameters therefor.

5,703,936
COMMUNICATION APPARATUS RECEIVING INFORMATION FROM PORTABLE INFORMATION MEDIUM

Shinji Tsuchida, Zama; Shoichi Takashima, Tokyo, and Michihiro Izumi, Yokohama, all of Japan, assignors to Canon Kabushiki Kaisha, Tokyo, Japan

Continuation of Ser. No. 130,426, Oct. 1, 1993, abandoned, which is a continuation of Ser. No. 677,134, Mar. 29, 1991, abandoned. This application Feb. 17, 1995, Ser. No. 390,169
Claims priority, application Japan, Apr. 2, 1990, 2-088803; Apr. 2, 1990, 2-088804
Int. Cl.^{6} **H04M** *1/64*
U.S. Cl. 379—88 **24 Claims**

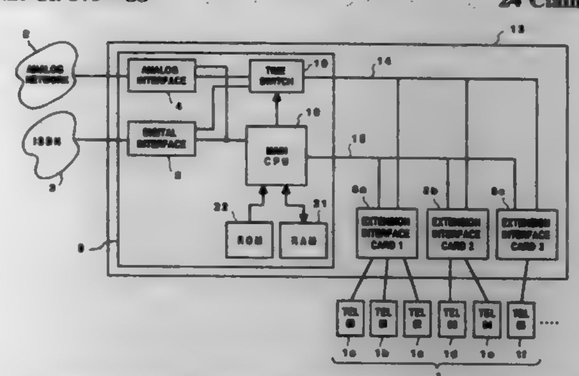

1. A communication apparatus which accommodates a plurality of terminals including a first terminal to which a portable information medium is connected and a second terminal which has manual input means, said apparatus comprising:
  reception means for receiving a message from the portable information medium, via the portable information medium connected to the first terminal;
  control means for controlling the second terminal so as to display that the message is received; and
  outputting means for outputting the message received by said reception means when a password is manually input from said manual input means of the second terminal so as to control displaying on the second terminal based on a message displayed on the portable information medium.

5,703,937
VOICE DICTATION CONSULTING SYSTEM AND METHOD

Jeremy Saltzman, Norwalk, Conn., assignor to Dictahone Corporation, Stratford, Conn.

Continuation of Ser. No. 370,957, Mar. 2, 1995, abandoned, which is a continuation of Ser. No. 124,678, Sep. 23, 1993, abandoned, which is a continuation of Ser. No. 723,022, Jun. 28, 1991, abandoned. This application Feb. 23, 1996, Ser. No. 606,092
Int. Cl.^{6} **H04M** *1/64*
U.S. Cl. 379—88 **10 Claims**

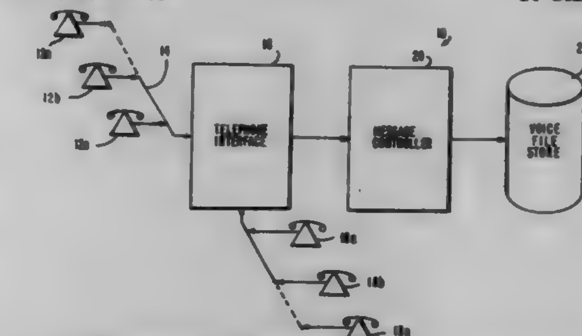

1. A voice processing system, comprising:
an interface device for receiving incoming calls from callers not associated with said voice processing system and for receiving calls from professionals who are associated with said voice processing system and who are provided with voice mail storage;
a voice storage device for storing message from said callers and for storing response messages from said professionals; and
a message controller coupled to said interface device and said voice storage device for receiving from a caller during an initial call a selection of one of a plurality of professionals, controlling said voice storage device to store a message supplied, by said caller during said initial call, for a selected professional and assigning a unique identification code to said stored message; said controller being adapted to supply said stored message to the selected professional and control said voice storage device to store a response message from the selected professional; and said controller being adapted to supply said stored response message to said caller, during a subsequent call by said caller to the selected professional, if the selected professional is unavailable to receive said subsequent call and the caller supplies said unique identification code to said voice processing system during said subsequent call; and
wherein said subsequent call occurs after said initial call.

5,703,938
METHOD OF OPTIMIZING ACCESS TRUNK CONFIGURATIONS AND SYSTEM THEREFOR

Gary L. Lucas, Springfield; Kathleen E. Keller, Arlington; David Agatston, Oakton, and Drew Caplan, Vienna, all of Va., assignors to MCT Communications Corp., Washington, D.C.

Filed Aug. 28, 1995, Ser. No. 520,108
Int. Cl.^{6} **H04N** *15/00;7/00*
U.S. Cl. 375—112 **51 Claims**

27. In a telecommunications network including a wide area service provider having a plurality of points-of-presence (POPs) and a plurality of local area access providers each having a plurality of end offices and tandem switches, a system for effecting an optimized configuration of direct and tandem trunk connections between at least one point-of-presence (POP) of said wide area service provider and at least one end office of a local area access provider for a particular grade of service at minimal access cost, comprising:
  database means for storing the respective locations of the POPs, tandem switches and end offices within said network, and cost

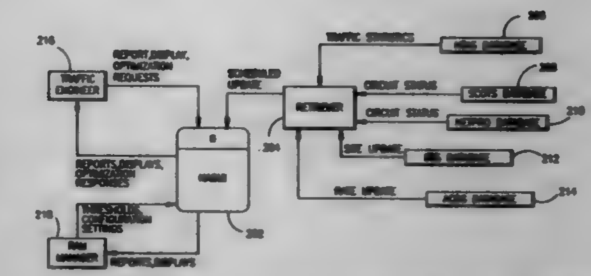

information relating to direct and tandem trunk utilization between at least said one POP and said one end office;
means for determining access capabilities of said one end office of said local area access provider to which access is sought by said one POP of said wide area service provider;
means for collecting telecommunications traffic pattern of said one end office; and
processor means for defining a tandem service area to include at least said one POP, said one end office and at least one tandem switch, said processor means further utilizing data at least relating to the relative distance between said one POP and said one end office, said access capabilities of said one end office, said cost information and said traffic pattern to determine how best to configure direct and tandem trunks to connect said one POP with said one end office for effecting within said tandem service area an optimized trunk configuration at a minimum access cost.

5,703,939
METHOD FOR DETERMINING AN OPTIMUM POINT FOR DATABASE QUERIES DURING CALL DELIVERY IN A TELECOMMUNICATIONS NETWORK

William Jackson Bushnell, St. Charles, Ill., assignor to Lucent Technologies, Inc., Murray Hill, N.J.

Filed Jul. 27, 1995, Ser. No. 507,892
Int. Cl.^{6} **H04M** *3/42;7/00;15/00*
U.S. Cl. 379—113 **14 Claims**

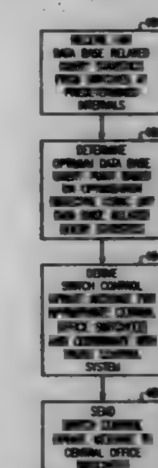

1. In a telecommunications network comprising a plurality of central office switches, a method for establishing an optimum database query point in a call delivery process comprises the steps of:
  recording database-related query statistics specific to a central office switch in the central office switch memory;
  receiving the database-related query statistics from each central office switch in the database traffic analysis system;
  the database traffic analysis system using the database-related query statistics to determine an optimum database query point; and
  sending a switch control update message to at least one central office switch such that the optimum database query point is established.

5,703,940

METHOD AND APPARATUS FOR DELIVERING CALLING SERVICES

Sohail Sattar, and Steven E. Polsky, both of Irving, Tex., assignors to InterVoice, Inc., Dallas, Tex.

Continuation-in-part of Ser. No. 151,543, Nov. 12, 1993, Pat. No. 5,469,500. This application Aug. 10, 1995, Ser. No. 513,477

Int. Cl.⁶ H04M *3/42*

U.S. Cl. 379—201 **50 Claims**

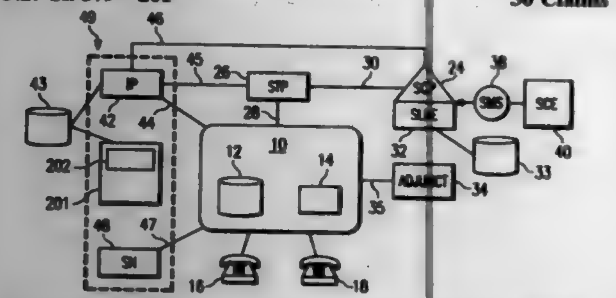

17. A method for a call processor to deliver calling services to a caller, comprising the steps of:

determining that said call processor does not contain proper logic pertaining to a calling service requested by a service control point (SCP);

requesting that said SCP download program instructions defining said calling service to said call processor;

downloading said program instructions from said SCP to said call processor; and

executing said program instructions by said call processor.

5,703,941

CONNECTION CONTROL METHOD FOR PERSONAL COMMUNICATIONS

Akihisa Nakajima, Higashimurayama; Masami Yabusaki, Iruma; Shoichi Hirata, Tokorozawa; Kenichi Yamaguchi; Shiokazu Fujiwara, both of Tokyo; Yasuo Maruyama, Yokosuka; Yasuyuki Uchiyama, Chofu, and Eriko Takemoto, Tottori, all of Japan, assignors to NTT Mobile Communications Network, Inc., Tokyo, Japan

Continuation of Ser. No. 132,355, Oct. 6, 1993, abandoned. This application Mar. 14, 1996, Ser. No. 671,775

Claims priority, application Japan, Oct. 16, 1992, 4-278570; Oct. 16, 1992, 4-278571; Apr. 2, 1993, 5-076746

Int. Cl.⁶ H04M *3/42*

U.S. Cl. 379—201 **4 Claims**

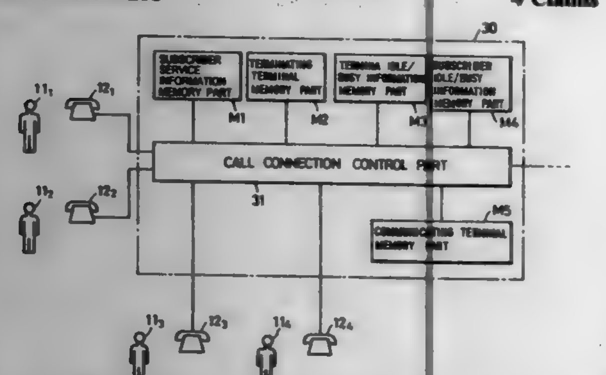

1. A call connection method in a personal communication system, said personal communication system comprising a plurality of switching centers each of which includes a plurality of terminals and has subscriber idle/busy memory means for storing subscriber idle/busy information in correspondence with the personal number of each subscriber, terminal idle/busy memory means for storing terminal idle/busy information in correspondence with the terminal number of each terminal, terminating terminal memory means for storing the number of a terminating terminal in correspondence with the personal number of each subscriber, and communicating terminal memory means for storing the terminal number of a communicating terminal which is currently being used by each subscriber in correspondence with the personal number of each subscriber, said terminating terminal having been registered by each subscriber as his or her terminating terminal to which an incoming call for him or her should be connected, each switching center performing a personal communication connection process between subscribers accommodated therewithin or between a subscriber accommodated therewithin and a subscriber accommodated within another switching center,

said call connection method comprising, when each switching center receives a terminating personal number as an incoming call connection request signal from a subscriber accommodated therewithin or a subscriber accommodated within another switching center, the steps of:

(A) reading out from said communicating terminal memory means the terminal number of a communicating terminal corresponding to said received terminating personal number to determine whether the communicating terminal number is registered or not;

(B) performing, when it is determined in step (A) that the communicating terminal number has been registered, a waiting call connection process to the terminal of said communicating terminal number for informing the terminating subscriber using the terminal of said communicating terminal number that there is a new incoming call to him or her;

(C) performing, when the terminal of said communicating terminal number issues an incoming call switching connection request for the new incoming call to the switching center, an incoming call connection process to the terminal of said communicating terminal number;

(D) reading out from said terminating terminal memory means, when it is determined in step (A) that the communicating terminal number has not been registered, the terminating terminal number corresponding to said terminating personal number, reading out from said terminal idle/busy memory means terminal idle/busy information corresponding to the terminating terminal number read out and performing, when said idle/busy information read out is idle, an incoming call connection process to the terminal of the terminating terminal number read out;

(E) cancelling said incoming call connection process when it is determined in step (D) that said idle/busy information read out is busy; and

(F) changing, when said incoming call connection process has been performed in said step (D), from idle states to busy states the idle/busy information in both said subscriber idle/busy memory means and said terminal idle/busy memory means corresponding to said terminating subscriber and said terminating terminal, respectively, and writing into said communicating terminal memory means the terminal number of the terminal to which the incoming call connection process has been performed in correspondence with the personal number of said terminating subscriber.

5,703,942

PORTABLE TELEPHONE USER PROFILES USING CENTRAL COMPUTER

Deborah L. Pinard, Kanata, and Kim D. Letkeman, Nepean, both of Canada, assignors to Mitel Corporation, Ontario, Canada

Continuation of Ser. No. 262,783, Jun. 20, 1994, abandoned. This application Apr. 19, 1996, Ser. No. 636,777

Claims priority, application Canada, Jul. 16, 1993, 2.100.699

Int. Cl.⁶ H04M *3/42*

U.S. Cl. 379—207 **8 Claims**

1. A method of invoking a telephone user profile comprising:

(a) storing in a database a user telephone service profile containing

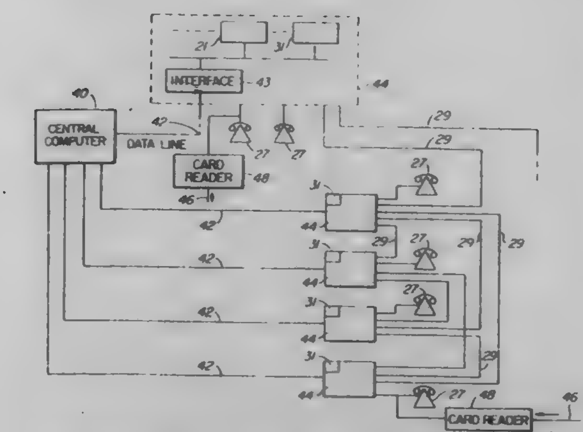

(i) a directory number of a user, in association with a telephone set line location, and

(ii) at least one of telephone feature data and telephone restriction data,

(b) transmitting the user telephone service profile to a central computer,

(c) transmitting said service profile to a group of telephone office switches from said computer,

(d) storing said service profile at each of the telephone office switches in the group for use by each of the telephone office switches in processing calls which involve said directory number, and

(e) providing service to said user at each of the telephone office switches in the group in accordance with said service profile.

5,703,943

COMPLETION OF CALLS TO A PREFERRED AGENT IN AN AUTOMATIC CALL DISTRIBUTOR

Mary Rita Otto, Lisle, Ill., assignor to Lucent Technologies, Inc., Murray Hill, N.J.

Filed Oct. 16, 1995, Ser. No. 543,539

Int. Cl.⁶ H04M *3/00;15/00;3/42*

U.S. Cl. 379—265 **5 Claims**

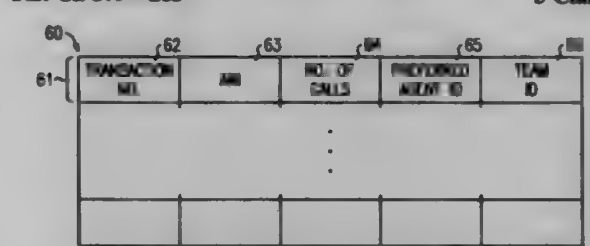

1. In an ACD (Automatic call distributor), a method of serving a second call for completing a transaction started by a caller in a first call, using an agent who had served said first call, comprising the steps of:

in said first call, providing said caller with a transaction number associated with said transaction;

storing said transaction number and an identification of said agent for said transaction;

subsequently, receiving said second call in said ACD;

receiving said transaction number from said caller;

identifying said agent from said transaction number; and completing said second call to said agent for completing said transaction.

5,703,944

NETWORK INTERFACE DEVICE

George Andrew DeBalko, Washington Township, Morris County, N.J., assignor to Lucent Technologies Inc., Murray Hill, N.J.

Filed Sep. 27, 1995, Ser. No. 534,145

Int. Cl.⁶ H04M *11/00;1/00;3/42;* **H01C** *7/12*

U.S. Cl. 379—399 **12 Claims**

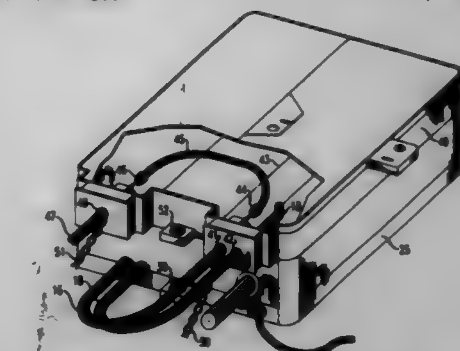

1. A device for providing an interface between a customer and combination telecommunications and cable TV network comprising:

a bottom portion forming a first enclosed housing for cable TV interdiction equipment and means for receiving a coaxial cable carrying cable TV signals thereon;

a separate top portion forming a second enclosed housing for telecommunication equipment, the second enclosed housing being removably mounted on top of the first enclosed housing, the second enclosed housing and telecommunication equipment being removable without requiring access to the first housing; and

a coaxial jumper cable connected between the equipment in the top and bottom portions.

5,703,945

HANDS FREE CORDLESS PHONE CADDY

Philip J. Smith, 368 Laurel Dr., Satsuma, Ala. 36572

Filed Dec. 13, 1995, Ser. No. 571,543

Int. Cl.⁶ H04M *1/00*

U.S. Cl. 379—428 **3 Claims**

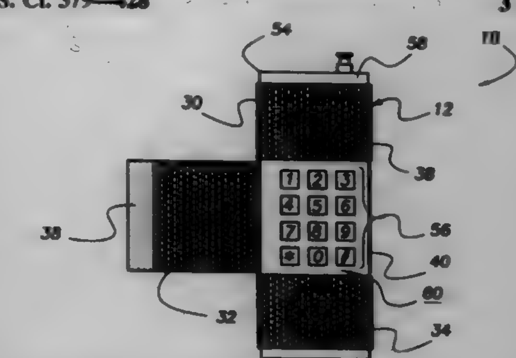

1. A cordless phone caddy comprising:

a substantially rectangular textile strap having a carrying portion extending from a first end thereof to a midpoint thereof and a flap portion having a top flap, a middle flap and a bottom flap extending from said midpoint, said textile strap being adapted for wrapping about a phone having a keypad located at a midpoint thereof between a mouthpiece and an earpiece, said textile strap being constructed of a mesh fabric that is sufficiently pervious to sound to allow a user to use said phone with said ear piece and said mouth piece covered by one of said top and bottom flaps, respectively, said textile strap having a width such that when said textile strap is secured about said phone, said phone is covered from said ear piece to said mouth piece;

releasable engaging means connected to said textile strap for releasably securing said top flap, said middle flap and said bottom flap to said first end of said textile strap about said phone;

a keypad aperture defined between said top flap and said bottom flap above said keypad of said phone when said top flap and said bottom flap are wrapped across a face of said phone and secured to said first end of said textile strap and said middle flap is disengaged from said first end of said textile strap; and

a clip attached to said carrying portion of said textile strap for releasably supporting said textile strap on an article of clothing of a user when said textile strap is secured about said phone.

5,703,946
MOBILE PHONE HOLDER
Yeh-ming Chen, 4th Fl., No. 153-2, Yenchi St., Taipei, Taiwan
Filed Sep. 13, 1996, Ser. No. 716,634
Int. Cl.⁶ H04M *1/00*
U.S. Cl. 379—446 **6 Claims**

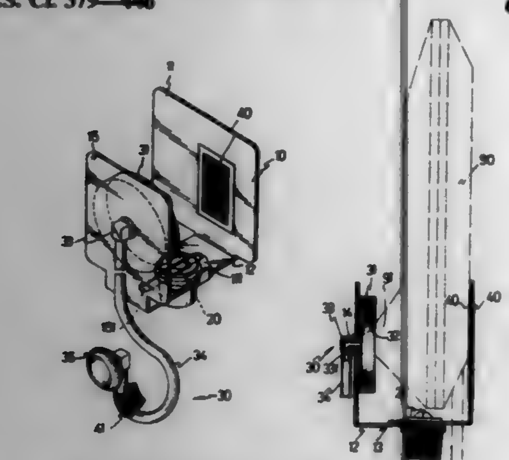

1. A mobile phone holder comprising:

a clamping member having a first plate and a second plate which has a hole provided therein, each said plate being provided with a slot on each of a bottom portion thereof;

a retaining member movably secured within said slots of said first plate and said second plate;

a sound transmitting member mounted on said second plate and having a sound resistent material provided on said second plate;

a hollow connector securely extending through said hole of said second plate;

an ear plug; and

a sound conductor having a first end which is securely connected with said hollow connector and a second end configured to be connected with said ear plug.

5,703,947
PORTABLE TELEPHONE EQUIPMENT FOR BIASING A SWITCHING MEMBER TO A NORMALLY NEUTRAL POSITION
Ichiro Hino, and Kazunori Imazaki, both of Kanagawa, Japan, assignors to Sony Corporation, Tokyo, Japan
PCT No. PCT/JP95/00942, § 371 Date May 23, 1996, § 102(e) Date May 23, 1996, PCT Pub. No. WO95/31863, PCT Pub. Date Nov. 23, 1995
PCT Filed May 17, 1995, Ser. No. 569,202
Claims priority, application Japan, May 17, 1994, 6-127002
Int. Cl.⁶ H04M *1/00*
U.S. Cl. 379—419 **12 Claims**

7. A portable telephone equipment comprising:

communicating and receiving means;

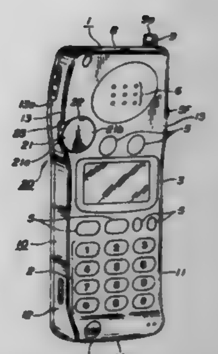

display means for displaying information based on a transmitting operation and a receiving operation by the communicating and receiving means;

a plurality of input keys for carrying out an input operation to go the communicating and receiving means;

a rigid body having a substantially parallelepiped shape and accomodating the communicating and receiving means therein, wherein the display means and the plurality of keys are disposed on a front surface of the rigid body, and having on a side surface of the rigid body a projected portion that protrudes outwardly from the side surface of the rigid body; and

operation means provided at the projected portion the rigid body for carrying out input operations to the communication means and receiving means and for carrying out switching operations of the communicating and receiving means, the operation means provided with a single operating member movable in a forward direction and in a reverse direction, and the operation means further includes biasing means for biasing the switching member to a normally neutral position such that when the switching member is returned to the neutral position by the biasing means the rotational operation member is returned to a neutral position.

5,703,948
PROTECTED COMMUNICATION METHOD AND SYSTEM
Eli Yanovsky, Haifa, Israel, assignor to Elementrix Technologies Ltd., Haifa, Israel
Filed Oct. 11, 1994, Ser. No. 320,452
Claims priority, application Israel, Feb. 14, 1994, 108645
Int. Cl.⁶ H04L *9/26*
U.S. Cl. 380—21 **47 Claims**

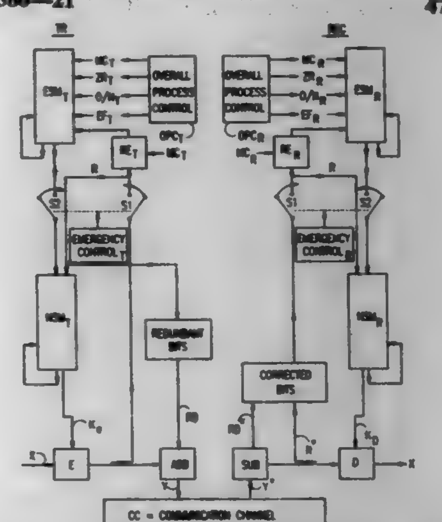

1. A method of transmitting encrypted messages between two units, including initializing the two units with respect to each other, and thereafter transmitting the messages between the two units

encrypted by means of dynamic random keys which are changed internally within the two units in synchronism with each other;

wherein one unit, serving as the transmitter party for a message, divides the message into a plurality of segments, encrypts each segment by an encrypting key which changes randomly from segment to segment, and transmits the encrypted segments;

wherein the other unit, serving as the receiver party for the respective message, receives the encrypted segments, divides each received message into the same segments as the transmitter, and decrypts each segment by the use of a decrypting key which initially matches the encrypting key and which changes randomly from segment to segment in the same manner as the encrypting key;

wherein the encrypting key is the output of a state machine at the transmitter, which state machine changes its state in a random manner from segment to segment according to at least one random manner from segment to segment according to at least one random characteristic transmitted with the respective segment;

and wherein the decrpting key is the output of a state machine at the receiver, which latter state machine also changes its state in a random manner from segment to segment according to the same random characteristic of the respective segment.

5,703,949
METHOD FOR ESTABLISHING SECURE COMMUNICATIONS AMONG PROCESSING DEVICES
Sholom S. Rosen, New York, N.Y., assignor to Citibank, N.A., New York, N.Y.
Continuation of Ser. No. 575,699, Dec. 19, 1995, abandoned, which is a division of Ser. No. 234,461, Apr. 28, 1994, Pat. No. 5,557,518. This application Oct. 23, 1996, Ser. No. 730,158
Int. Cl.⁶ H04L *9/00;9/14;9/16*
U.S. Cl. 380—21 **11 Claims**

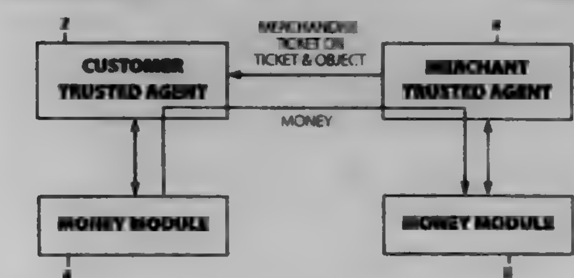

1. A method for enabling secure communications among processing devices, comprising the steps of:

establishing a first cryptographically secure session between a first processing device and a second processing device, where said first processing device is remotely located from said second processing device;

establishing a second cryptographically secure session between a third processing device and a fourth processing device, where said third processing device is remotely located from said fourth processing device, where said first processing device communicates with said third processing device over a first communications link, and where said second processing device communicates with said fourth processing device over a second communications link;

in said first processing device;

sending session key information stored in said second processing device to said third processing device via said second communications link and said second cryptographically secure session;

generating said session key in said third processing device at least in part from said session key information;

storing said session key in said third processing device; and

establishing a third cryptographically secure session between said first processing device and said third processing device using said session key.

5,703,950
METHOD AND APPARATUS FOR CONTROLLING COUNTRY SPECIFIC FREQUENCY ALLOCATION
Alan F. Jovanovich, Des Moines; Bruce G. Warren, Poulsbo; Duane G. Charron, Marysville, and Steven B. Duke, Bothell, all of Wash., assignors to Intermec Corporation, Everett, Wash.
Filed Jun. 30, 1995, Ser. No. 497,698
Int. Cl.⁶ H04L *9/32*
U.S. Cl. 380—23 **18 Claims**

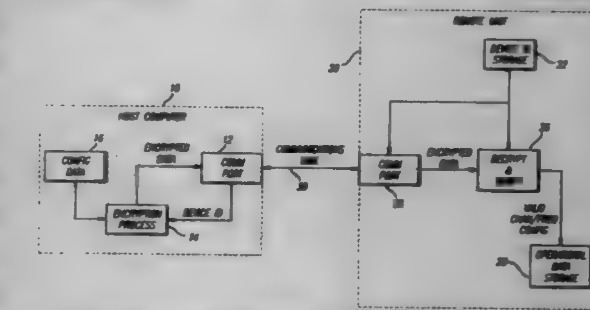

4. A method for transmitting an encrypted data set between a host processor and a remote system, said remote system having a unique identifier code, each of said host processor and said remote system having a predefined encryption algorithm, the method comprising the steps of:

transmitting said identifier code from said remote system to said host processor;

selecting a data set appropriate for said remote system;

encrypting said data set using said predefined encryption algorithm with said identifier code as an encryption key;

transmitting said encrypted data set from said host processor to said remote system; and

decrypting said encrypted data set using said predefined encryption algorithm with said identifier code as a decryption key, wherein said step of selecting a data set further comprises selecting a data set particular to a specific country in which said remote system is intended to operate.

5,703,951
SYSTEM AND METHOD FOR ACCESS DATA CONTROL
Janet L. Dolphin, Milpitas, Calif., assignor to Spyrus, Inc., San Jose, Calif.
Continuation of Ser. No. 359,347, Dec. 19, 1994, Pat. No. 5,457,746, which is a continuation of Ser. No. 122,005, Sep. 14, 1993, abandoned. This application Jun. 7, 1995, Ser. No. 474,306
Int. Cl.⁶ H04L *9/32*
U.S. Cl. 380—25 **23 Claims**

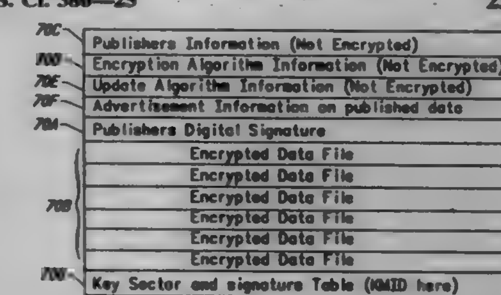

1. A system for controlling access by a user to a plurality of sets of data, comprising:

a processor for processing said data;

a data storage unit for storing each of said plurality of sets of data in a manner such that a predetermined access code is required for accessing each of said plurality of sets of data;

a controller, said controller adapted for communication with said processor and a remote location, for receiving from the remote location a signal representative of one of said predetermined access codes and for sending to the processor a

signal which enables access by said processor to a set of data stored on said storage unit;
a remote authorization unit located at a location remote from said processor and said controller, said remote authorization unit for transmitting an access code to said controller from said remote location in response to an authorization request signal sent by the user to said remote authorization unit; and
wherein said data storage unit stores update instructions and an update counter value for enabling said controller to use said transmitted access code to automatically generate an updated access code for enabling access to a previously inaccessible one of said sets of data stored on said data storage unit.

5,703,952
METHOD AND APPARATUS FOR GENERATING A CIPHER STREAM
Richard Taylor, Sherbrooke, Australia, assignor to Telstra Corporation Limited, Melbourne, Australia
PCT No. PCT/AU93/00687, § 371 Date Jun. 2, 1995, § 102(e) Date Jun. 2, 1995, PCT Pub. No. WO94/16509, PCT Pub. Date Jul. 21, 1994
PCT Filed Dec. 30, 1993, Ser. No. 448,420
Claims priority, application Australia, Dec. 30, 1992, PL 6577/92
Int. Cl.^{6} H04L *9/00*
U.S. Cl. 380—44 **33 Claims**

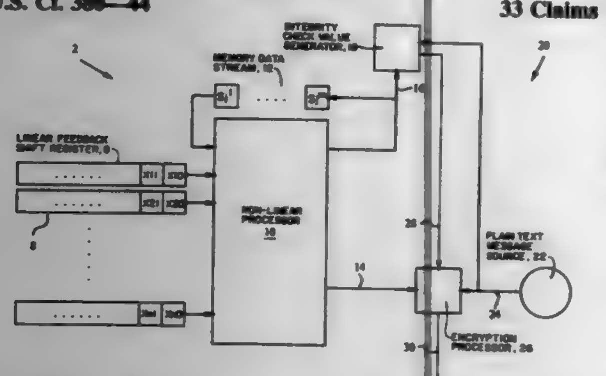

1. A digital data stream generator for generating a cipher stream, said digital data stream generator comprising: a feedback shift register for producing at least one pseudo-random data stream; and a processing structure for producing a cipher stream from said at least one data stream, said processing structure including a means which stores a sequence of combination values derived from a number of preceding values of the at least one data stream, and processing means for producing said cipher stream by multiplying pairs of said combination values to generate multiplied pairs and summing said multiplied pairs, wherein the difference in sequence position between the combination values for each pair is different.

5,703,953
MONAURAL SIGNAL JUDGEMENT CIRCUIT
Yoshishige Otoguro, Tokyo, Japan, assignor to LG Electronics Inc., Seoul, Rep. of Korea
Filed Apr. 5, 1996, Ser. No. 628,157
Claims priority, application Japan, Apr. 7, 1995, 7-082865
Int. Cl.^{6} H04H *5/00*
U.S. Cl. 381—12 **10 Claims**

1. A monaural signal judgement circuit, comprising:
wave-form-shaping means for separately wave-form-shaping a left-side signal and a right-side signal inputted thereto;
operation means for computing a signal level difference of the wave-form-shaped right-side and left-side signals;
control signal setting means for setting a control signal in accordance with an output of said operation means;
input control means connected between an input side of the operation means and output side of said control signal setting

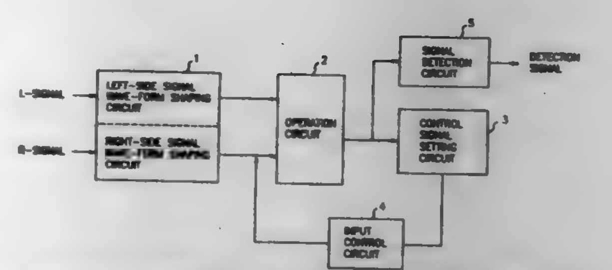

means for adjusting a signal level at an input side of the operation means in accordance with a control signal applied thereto and for controlling a signal level difference at an output side of the operation means to be within a predetermined range; and
signal detection means for detecting whether or not a monaural signal is present by detecting whether or not an output signal of the operation means is within a predetermined range.

5,703,954
METHOD AND APPARATUS FOR IMPROVING THE QUALITY OF AM COMPATIBLE DIGITAL BROADCAST SYSTEM SIGNALS IN THE PRESENCE OF DISTORTION
Mark J. Dapper, Cincinnati; Barry W. Carlin, Greenhills, and Michael J. Geile, Loveland, all of Ohio, assignors to USA Digital Radio Partners, L.P., New York, N.Y.
Filed Feb. 20, 1996, Ser. No. 604,199
Int. Cl.^{6} H04H *5/00*
U.S. Cl. 381—15 **14 Claims**

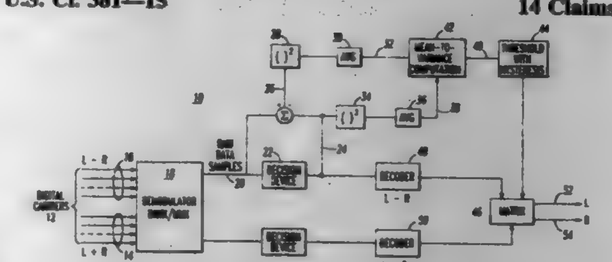

4. A system for reducing perceived distortion in an output audio signal derived from an amplitude modulated compatible digital broadcast signal having a monophonic portion and a stereo portion, said system comprising:
(a) means for demodulation said monophonic portion of said signal to produce a demodulated monophonic signal;
(b) means for demodulation said stereo portion of said signal to produce a demodulated stereo signal having a signal-to-noise ratio;
(c) means for estimation the signal-noise ratio in the demodulated stereo signal, said means for estimating the signal-noise ratio in the demodulated stereo signal comprising means for estimating the noise in the demodulated stereo signal, means for estimating the power of the demodulated stereo signal, and means for dividing the estimated noise in the demodulated stereo signal into the estimated power of the demodulated stereo signal, wherein said means for estimating the noise in the demodulated stereo signal comprises means for subtracting the demodulated stereo signal from said stereo portion of said amplitude modulated compatible digital broadcasting signal to obtain an error estimate, means for squaring said error estimate, and means for averaging said squared error estimate;
(d) means for comparing the estimated signal-to-noise ratio in the demodulated stereo signal to a threshold level set at the minimum acceptable signal quality; and
(e) means responsive to said means for comparing for synthesizing discrete left and right stereo outputs.

5,703,955
METHOD AND APPARATUS FOR MULTICHANNEL SOUND REPRODUCTION
Peter Fels; Ulf Wüstenhagen, and Gerhard Steinke, all of Berlin, Germany, assignors to Deutsche Telekom AG, Germany
Filed Jun. 7, 1995, Ser. No. 477,036
Claims priority, application Germany, Nov. 9, 1994, 44 40 014.4
Int. Cl.^{6} H04R *5/00*
U.S. Cl. 381—18 **11 Claims**

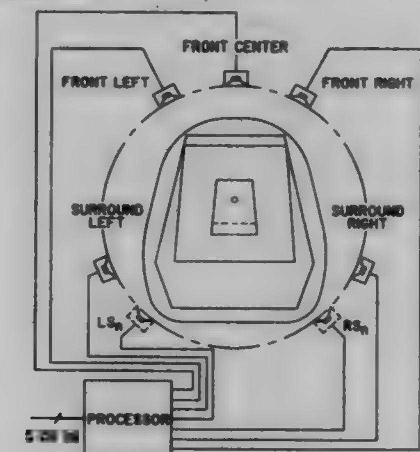

1. A method for processing multichannel sound signals representing at least three front and two surround channels, the method comprising the steps of:
distributing the signals into groups of signals, with each group including at least one first signal and at least one second signal;
processing each first signal in each signal group by modifying at least one parameter selected from the group of signal parameters consisting of delay, level and phase position;
summing together the processed first signals and the second signals of each signal group thereby generating an aggregate signal for each signal group; and
distributing the aggregate signals to the at least three front and the two surround reproduction channels and to at least one additional surround reproduction channel, in accordance with a directional allocation of the respective second sound signals, wherein the reproduction channels are used to drive loudspeakers arranged in a room.

5,703,956
EXTERNAL MEMORY CONTROL CIRCUIT FOR SOUND FIELD PROCESSING DIGITAL SIGNAL PROCESSOR
Jong Hyun Kim, Seoul, Rep. of Korea, assignor to LG Electronics Inc., Seoul, Rep. of Korea
Filed Sep. 1, 1995, Ser. No. 522,707
Claims priority, application Rep. of Korea, Sep. 3, 1994, 94 22178
Int. Cl.^{6} H03G *3/00*
U.S. Cl. 381—63 **8 Claims**

1. An external memory control circuit for a digital signal processor adapted to execute an algorithm used in sound field processing for an input signal, the algorithm processing a first control signal and a second control signal, and to control a memory unit for obtaining a signal delay required in a computational operation for the sound field processing, comprising:
memory buffer control means for receiving the first control signal and the second control signal upon executing the algorithm, for controlling reading of data recorded in the memory unit in accordance with the first control signal and controlling recording of data externally input to the memory unit in accordance with the second control signal;

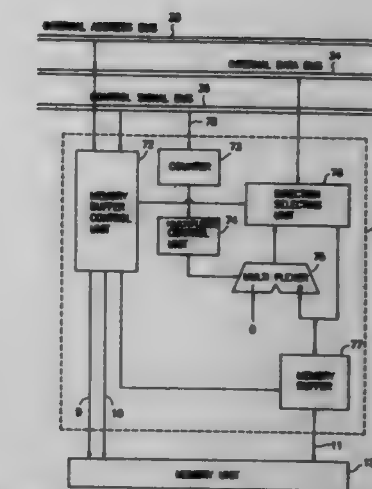

memory buffer means for buffering recorded data output from the memory unit and data to be externally input to the memory unit under the control of the memory buffer control means;
switching means for receiving a third control signal when a power is first supplied to the digital signal processor or when a change of the algorithm is made, and for outputting a selection control signal in accordance with the third control signal;
multiplexing means for selecting one of a data value output from the memory buffer means and a muting data value in accordance with the selection control signal from the switching means and outputting the thusly selected data value; and
direction selecting means for outputting the data value output from the multiplexing means to an internal data bus and for outputting data from an internal data bus to the memory buffer means under control of the memory buffer control means.

5,703,957
DIRECTIONAL MICROPHONE ASSEMBLY
Jeffrey Phillip McAteer, Fishers, Ind., assignor to Lucent Technologies Inc., Murray Hill, N.J.
Filed Jun. 30, 1995, Ser. No. 497,269
Int. Cl.^{6} H04R *3/00*
U.S. Cl. 381—92 **9 Claims**

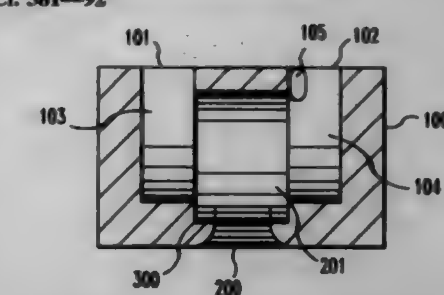

1. An assembly for use in forming a directional microphone arrangement comprising: a resilient unitary housing intended to house a microphone element including a diaphragm responsive to differential sound pressure on opposite sides thereof for generating an electrical signal proportional to the differential sound pressure, the resilient unitary housing inducting: (i) a first acoustically-transparent channel for communicating sound pressure from a first port in the housing to one side of the diaphragm; (ii) a second acoustically-transparent channel for communicating sound pressure from a second port in the housing to the other side of the diaphragm; (iii) an inner chamber communicating with the fast and second channels for housing said microphone element; and (iv) an opening in an outer surface of said resilient unitary housing, said opening extending to said inner chamber for insertion of the microphone element through said opening into said inner-chamber,

said opening being dimensioned such that the perimeter of said opening is such that the resilient unitary housing will seal tightly around said microphone element when inserted into said inner chamber so that there is no leakage from said inner chamber or coupling of sound energy from one side of said microphone element to said other side of said microphone element.

5,703,958
PICTURE PROCESSING METHOD FOR CORRECTING DISTORTED PICTURES AND APPARATUS FOR EXECUTING THIS METHOD
Masanori Hara, Tokyo, Japan, assignor to NEC Corporation, Tokyo, Japan
Filed Aug. 29, 1994, Ser. No. 297,042
Claims priority, application Japan, Aug. 27, 1993, 5-212019
Int. Cl.[6] G06K *9/03*
U.S. Cl. 382—124 **8 Claims**

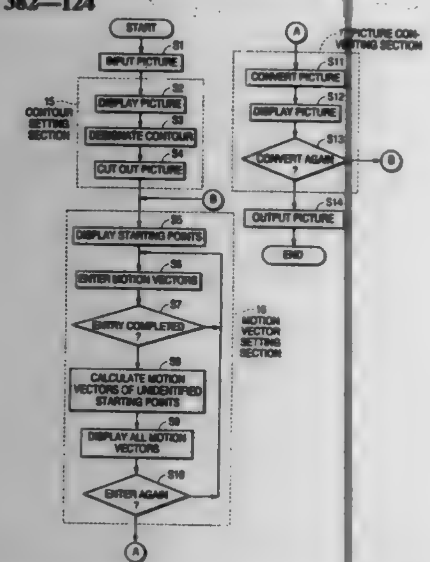

1. An image analysis process executed by a computer connected to a display to display a picture and an input unit to enter data, said image analysis process receiving a first set of picture data representing an uncorrected picture, said image analysis process supplying a second set of picture data representing a corrected picture, each of said first and second sets of picture data comprising a plurality of pixels and each pixel of said first and second sets of picture data holding at least one kind of data, said process comprising:

a first step to receive said first set of picture data;

a second step to display on said display said uncorrected picture in accordance with said first set of picture data;

a third step to determine motion vectors for said uncorrected picture on the basis of information from said input unit;

a fourth step to generate a vector relating a pixel in said first set of picture data to a corresponding pixel in said second set of picture data using a weighted vector sum of motion vectors;

a fifth step to designate data in each pixel of said second set of picture data on the basis of data held by a corresponding pixel of said first set of picture data; and

a sixth step to output said second set of picture data, and

wherein the weight of said motion vectors is proportional to the reciprocal of the square of r, r representing a distance between a pixel of said second set of picture data and an end point of each of said motion vectors.

5,703,959
METHOD AND DEVICE FOR ANALYZING PARTICLES
Kaoru Asano, Kobe, and Kimiyo Kubo, Kakogawa, both of Japan, assignors to Toa Medical Electronics Co., Ltd., Kobe, Japan
Continuation of Ser. No. 76,870, Jun. 15, 1993, abandoned. This application Jan. 3, 1995, Ser. No. 368,053
Claims priority, application Japan, Jun. 19, 1992, 4-186265
Int. Cl.[6] G06K *9/62*
U.S. Cl. 382—133 **10 Claims**

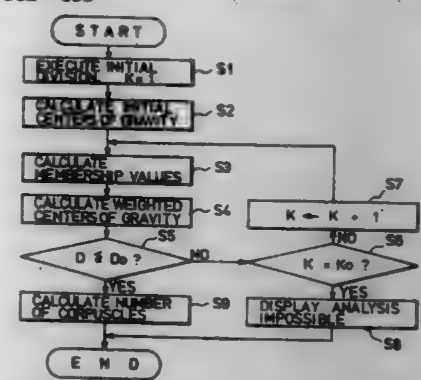

3. In an analyzing device, a method of analyzing a mixture of particles belonging to a plurality of categories to count a number of particles belonging to each of the categories, each particle being individually characterized by a corresponding measured data vector, each measured data vector including a plurality of characteristic parameters, each characteristic parameter being representative of a physical characteristic of a corresponding particle, the method comprising steps of:

converting a plurality of measured data vectors representative of a specimen of particles into a spatial distribution of the plurality of measured data vectors based on spatial dimensions corresponding to the plurality of characteristic parameters, a predetermined number of domains having been predefined in a space of the spatial distribution, the domains including fixed domains and one other domain, each domain defining a respective subspace;

calculating presumed information for each of said plurality of categories from part of the plurality of measured data vectors, the presumed information including a plurality of presumed centers-of-gravity;

determining a corrected center-of-gravity for each category based on the presumed center-of-gravity being used as an initial center-of-gravity, the step of determining a corrected center-of-gravity including initially dividing said particles into said plurality of categories based on the spatial distribution of the measured dam vectors and then determining a membership value set for each measured dam vector, each membership value set including a membership value corresponding to each domain and being a weight of membership of the measured data vector in the category corresponding to the domain; and

clustering said mixture of particles into said plurality of categories based on the spatial distribution of said measured data vectors and based on said corrected center-of-gravity and counting a number of particles belonging to each of the categories of particles based on the membership value sets, wherein the step of determining a corrected center-of-gravity further includes:

calculating the corrected center-of-gravity for each category based on the membership value sets;

determining a difference between the corrected center-of-gravity and the initial center-of-gravity for each category; and

judging that the number of particles belonging to each of the categories of particles is not yet ascertained when the difference determined for any of the categories is greater than a predetermined difference threshold.

5,703,960
LUMBER DEFECT SCANNING INCLUDING MULTI-DIMENSIONAL PATTERN RECOGNITION
Jon F. Soest, Seattle, Wash., assignor to U.S. Natural Resources, Inc., Vancouver, Wash.
Continuation of Ser. No. 296,348, Aug. 24, 1994, abandoned. This application Sep. 16, 1996, Ser. No. 714,632
Int. Cl.[6] G06K *9/00*
U.S. Cl. 382—141 **19 Claims**

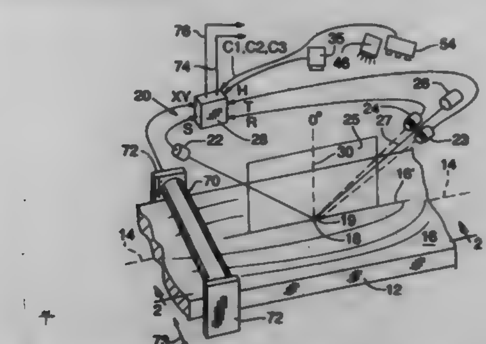

1. A method for identifying a defect relative to a given wood article, said method comprising the steps:

collecting a first set of sensor data values taken from sensors directed toward a portion of a sample wood article surface, said portion of said sample wood article surface corresponding to a known defect, said set of sensor data values including a first specular reflection value and a first diffuse reflection value each representing wood grain structure at said portion of said wood article;

selecting at least one mathematic function applied to said set of sensor data values and providing a given distance therebetween;

collecting a second set of sensor data values taken from sensors directed toward a portion of said given wood article, said second set of sensor data values corresponding to said first set of sensor data values and including a second specular reflection value and a second diffuse reflection value;

applying said mathematic function to said second set of sensor data values; and

if said at least one mathematic function indicates distance between said second set of sensor data values at or below said given distance then identifying said portion of said given wood article as corresponding to said known defect.

5,703,961
IMAGE TRANSFORMATION AND SYNTHESIS METHODS
Peter R. Rogina, Martinsville, N.J., and David Macintosh, Inverkeithing, United Kingdom, assignors to WorldScape L.L.C., Martinsville, N.J.
Filed Dec. 29, 1994, Ser. No. 365,750
Int. Cl.[6] G06K *9/00*
U.S. Cl. 382—154 **50 Claims**

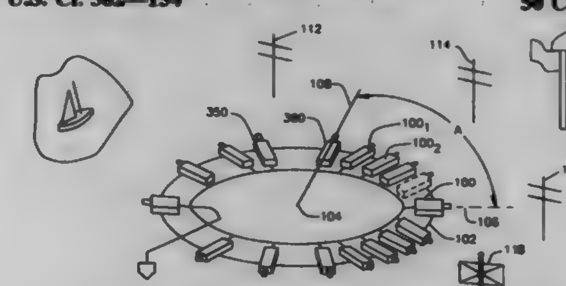

1. A method of synthesizing an image of a scene corresponding to the image of said scene which would be observed from a virtual viewpoint comprising the steps of:

(a) providing a plurality of discrete images corresponding to the images of the scene observed from a plurality of discrete viewpoints, each said discrete image including an array of pixel data in a first image dimension corresponding to position of depicted objects in a first dimension of said scene and in a second image dimension orthogonal thereto;

(b) constructing a first epipolar image from said discrete images, said first epipolar image including a plurality of line sets, each one of said line sets including one line of pixel data in said first image dimension from each one of said discrete images, all of the lines in each one of said line sets corresponding to the same location in said second image dimension, said lines of pixel data within each line set being ordered in an order corresponding to an order of positions of said discrete viewpoints in said first dimension of said scene, each pair of adjacent lines of pixel data within each line set being offset from one another by an initial offset;

(c) providing pixel data for said synthetic image as a plurality of virtual viewpoint pixel lines extending in said first image dimension and displaced from one another in said second image dimension by (i) associating each virtual viewpoint line with a line set in said first epipolar image formed from lines having location in said second image dimension corresponding to the location in said second image dimension of that virtual viewpoint line and (ii) for each pixel within each virtual viewpoint line, deriving synthetic pixel data from pixel data in the associated line set.

5,703,962
IMAGE PROCESSING METHOD AND APPARATUS
Toru Niki, Yokohama; Nasami Kugai, Yamato, and Tadanori Nakatsuka, Machida, all of Japan, assignors to Canon Kabushiki Kaisha, Tokyo, Japan
Filed Aug. 25, 1992, Ser. No. 934,313
Claims priority, application Japan, Aug. 29, 1991, 3-218571; Oct. 21, 1991, 3-272706; Nov. 5, 1991, 3-288274
Int. Cl.[6] G06K *9/00*
U.S. Cl. 382—173 **9 Claims**

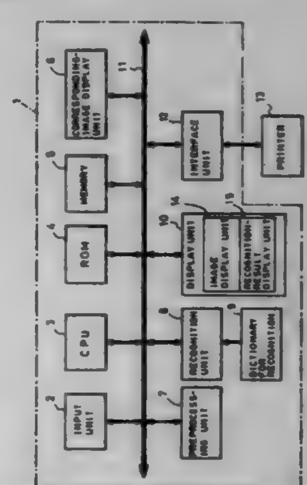

1. A character recognition method comprising the steps of:

inputting an image of a document;

displaying the input image;

segmenting character patterns from the input image information;

calculating the number of character patterns contained in a specified portion of the image marked by a cursor on a display picture which displays said input image based on the result of segmenting;

determining the size of a display area required for displaying a result of character recognition of the specified portion of the image according to the calculated number; and

performing a display control so as to change the size of an area required for displaying a result of character recognition of the specified portion of the image in accordance with a size determined in said determining step.

5,703,963

CHARACTER RECOGNITION APPARATUS THAT SUBDIVIDES A CHARACTER INTO SUBREGIONS TO OBTAIN FEATURE VECTORS

Yoshihiro Kojima, Kobe; Hiroshi Yamamoto, Katano; Susumu Maruno, Osaka, and Yasuharu Shimeki, Suita, all of Japan, assignors to Matsushita Electric Industrial Co., Ltd., Japan

Filed Oct. 31, 1994, Ser. No. 332,120

Claims priority, application Japan, Nov. 4, 1993, 5-275726

Int. Cl.⁶ G06K *9/48;9/56;9/62;9/38*

U.S. Cl. 382—197 **9 Claims**

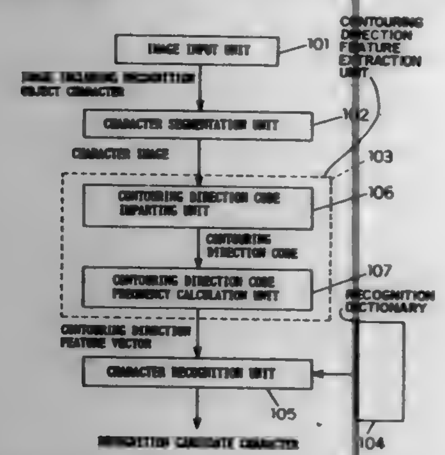

1. A character recognition apparatus comprising:

contouring direction feature extracting means for extracting a contouring direction feature vector which is used for recognizing a character from an inputted character image, and

character recognition means for extracting recognition candidate characters based on the contouring direction feature vector extracted by said contouring direction feature extracting means, wherein

said contouring direction feature extracting means has

contouring direction code imparting means for obtaining, for each contour point of an inputted character image, contouring direction codes in which a direction of a contour line of a character is quantized in at least four directions, from at least a pattern of pixels adjacent to the contour point;

contouring direction code frequency calculation means for obtaining a frequency of each of the obtained contouring direction codes, for each subregion obtained by dividing the character image into M sections in a horizontal direction and N sections in a vertical direction; and

contouring direction code space blurring means for obtaining the contour direction feature vector, on the basis of the obtained frequency, by conducting, for each contouring direction code, a weighted addition of the frequency of each subregion (A) by adding, with a predetermined weight coefficient, the frequency of a subregion in the vicinity of the subregion (A).

5,703,964

PATTERN RECOGNITION SYSTEM WITH STATISTICAL CLASSIFICATION

Murali M. Menon, Woburn, and Eric R. Boudreau, Leominster, both of Mass., assignors to Massachusetts Institute of Technology, Cambridge, Mass.

PCT No. PCT/US94/10527, § 371 Date May 6, 1996, § 102(e) Date May 6, 1996, PCT Pub. No. WO95/08159, PCT Pub. Date Mar. 23, 1995

Continuation-in-part of Ser. No. 122,705, Sep. 16, 1993, Pat. No. 5,537,488. This PCT application Sep. 16, 1994, Ser. No. 617,854

Int. Cl.⁶ G06K *9/62*

U.S. Cl. 382—228 **24 Claims**

1. A pattern recognition system comprising:

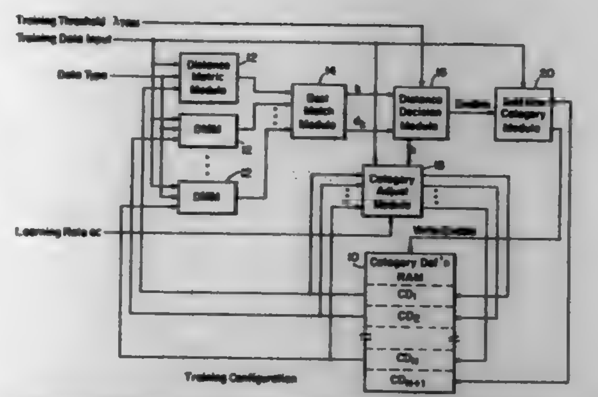

a memory that stores a set of categories of training input patterns from a plurality of subject classes, each training input pattern representing multiple features of a subject, each category having a category definition according to training input patterns within the category, each category definition comprising a plurality of input pattern feature definitions, each category being associated with a training histogram of the training input patterns within the category and the training histogram including counts of training input patterns for each subject class within the category; and

a classifier that receives during a testing operation at least one test input pattern from the subject, that accesses the set of categories, that computes a correlation between a category definition and the at least one test input pattern, that forms a category association between the at least one test input pattern and a category based on the correlation and that forms an observation histogram to classify the subject, the observation histogram being formed from each training histogram of each category of each category association, the observation histogram containing counts of training input patterns in the category, classification of the subject being determined by a peak class of the observation histogram.

5,703,965

IMAGE COMPRESSION/DECOMPRESSION BASED ON MATHEMATICAL TRANSFORM, REDUCTION/EXPANSION, AND IMAGE SHARPENING

Chi-Yung Fu, San Francisco, and Loren I. Petrich, Livermore, both of Calif., assignors to The Regents of the University of California, Oakland, Calif.

Continuation-in-part of Ser. No. 348,431, Dec. 2, 1994, Pat. No. 5,615,287, and Ser. No. 441,152, May 15, 1995, Ser. No. 894,391, Jun. 5, 1992, Pat. No. 5,538,915. This application Jun. 6, 1995, Ser. No. 486,172

Int. Cl.⁶ G06K *9/36;9/46*

U.S. Cl. 382—232 **8 Claims**

1. A method for electronically transmitting image representations through limited-bandwidth communications channels comprising the steps of:

decimating a first array of image elements in two dimensions to form a decimated image array of a reduced-element-volume second array of decimated image elements by assigning to each image element in said second array a single value mapped from and related to a uniformly sized group of image elements in a plurality of such groups in said first decimated image array;

compressing the volume of data needed to represent said decimated image array by a predefined compression algorithm to form a compressed image representation;

transmitting said compressed image representation over a limited-bandwidth transmission medium to another location;

decompressing said transmitted compressed image representation with a predefined decompression algorithm that is the inverse of said predefined compression algorithm, to form a decompressed image array;

expanding said decompressed image array into an interpolated image array by mapping each image element in said decom-

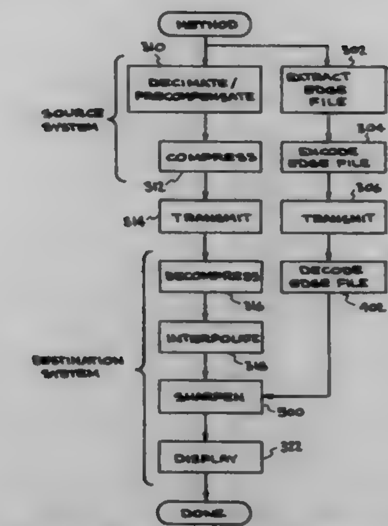

pressed image array to a group of image elements of said uniform size in said interpolated image array and interpolating each image element in each group according to a predefined interpolation function that substantially reverses the step of decimation and restores each image element in said interpolated image array to approximate its counterpart in said first array of image elements; and

sharpening object edges represented in an interpolated image. included in said interpolated image array to form an output image array wherein each image element in said output image array is further improved overall to approximate its counterpart in said first array of image elements;

said step of sharpening comprises the step of replacing each i^{th} element of said interpolated image array with a value given by a weight function

$$I_i^{new} = \frac{\sum_k w(\vec{x}_k - \vec{x}_i, \vec{I}_k - \vec{I}_i^{new}) \cdot \vec{I}_k}{\sum_k w(\vec{x}_k - \vec{x}_i, I_k - I_i^{new})}$$

where w is a weight function which decreases as $|\vec{x}_k - \vec{x}_i|$ increases and decreases as $|\vec{I}_k - \vec{I}_i|$ increases.

5,703,966

BLOCK SELECTION USING MOTION ESTIMATION ERROR

Brian Astle, Plainsboro, N.J., assignor to Intel Corporation, Santa Clara, Calif.

Filed Jun. 27, 1995, Ser. No. 495,098

Int. Cl.⁶ G06K *9/00*

U.S. Cl. 382—236 **37 Claims**

1. A computer-implemented method for encoding a current block of pixels of a current picture of a sequence of pictures, the sequence of pictures comprising a previous picture having a previous reference block and a subsequent picture having a subsequent reference block, the method comprising the steps of:

(a) determining a previous residual error between the current block and the previous reference block;

(b) determining a subsequent residual error between the current block and the subsequent reference block;

(c) defining at least one interpolated picture interpolated between the previous and subsequent pictures, the interpolated picture having an interpolated reference block; and

(d) determining, from the previous and subsequent residual errors, an interpolated residual error between the current block and the at least one interpolated reference block,

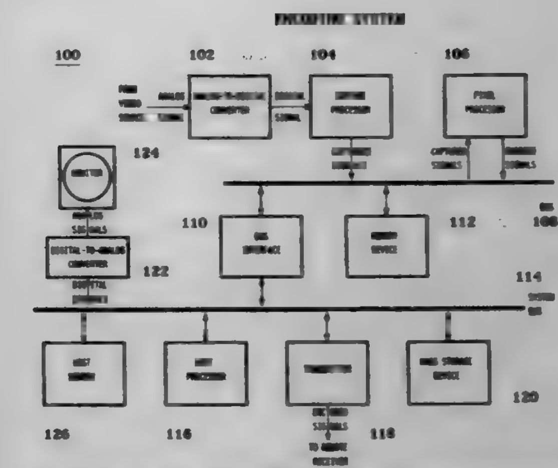

wherein the interpolated residual error is for reproducing said current block from said interpolated reference block.

5,703,967

COLOR IMAGE TRANSMITTING METHOD

Makoto Takaoka, Kawasaki, Japan, assignor to Canon Kabushiki Kaisha, Tokyo, Japan

Continuation of Ser. No. 164,845, Dec. 9, 1993, abandoned, which is a continuation of Ser. No. 630,817, Dec. 20, 1990, abandoned. This application Dec. 4, 1996, Ser. No. 763,632

Claims priority, application Japan, Dec. 29, 1989, 1-343118

Int. Cl.⁶ H04N *1/41;1/38*

U.S. Cl. 382—239 **29 Claims**

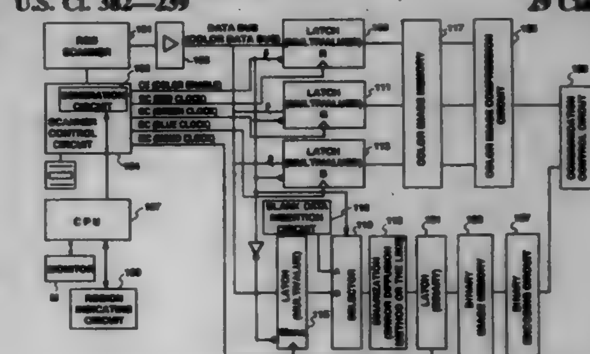

26. An image encoding method for encoding an original image composed of a multi-level image having multiple levels and a binary image having binary levels, comprising the step of:

designating a multi-level portion having the multi-level image;

replacing the multi-level portion with a flat image portion having one of the binary levels to create a created image which comprises the flat image portion and the binary image of the original and has the same size as the original image; and

encoding the multi-level image and the created image in a unit of an area extending in a predetermined direction by using different coding schemes.

5,703,968

METHOD AND APPARATUS FOR DETECTING INTERPOLATION LINE

Yasuhiro Kuwahara, Osaka; Haruo Yamashita, Ibaraki, and Tsumoru Fukushima, Kyoto, all of Japan, assignors to Matsushita Electric Industrial Co., Ltd., Osaka-fu, Japan

Filed Apr. 18, 1995, Ser. No. 424,036

Claims priority, application Japan, Apr. 19, 1994, 6-080736

Int. Cl.⁶ G06K *9/38*

U.S. Cl. 382—269 **19 Claims**

1. An interpolation line detection method for detecting an ultimate interpolation line to interpolate an attentional pixel from

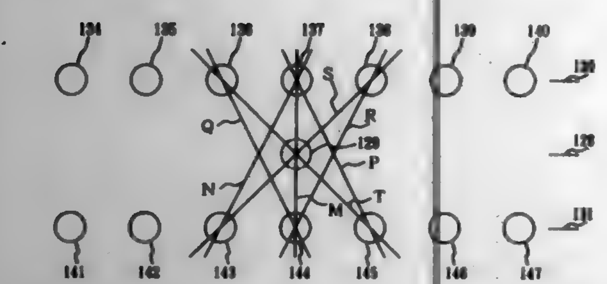

plural lines passing through the attentional pixel on a scanning line to be interpolated, pixels on an upper scanning line placed over said scanning line to be interpolated and pixels on a lower scanning line placed under said scanning line to be interpolated characterized in that

said interpolation line detection method comprises:
a first effective interpolation line detection step,
a first interpolation line setting step,
a second interpolation line setting step and
a setting method selection step,

and that

by defining for the following steps that a level difference of a line passing through two pixels is a difference between a luminance level of a pixel and a luminance level of the other pixel,

at said first effective interpolation line detection step, a level difference of a first line passing through an upper pixel on said upper scanning line placed just above said attentional pixel and a lower pixel on said lower scanning line placed just under said attentional pixel, a level difference of a second line passing through said upper pixel and a lower left pixel placed to the left of said lower pixel, a level difference of a third line passing through said upper pixel and a lower right pixel placed to the right of said lower pixel, a level difference of a fourth line passing through said lower pixel and an upper left pixel placed to the left of said upper pixel and a level difference of a fifth line passing through said lower pixel and an upper right pixel placed to the right of said upper pixel are compared with each other, a line having a smallest level difference is detected, and first effective interpolation line information is generated,

at said first interpolation line setting step, said level difference of said first line is compared with a level difference of a sixth line passing through said upper right pixel and said lower left pixel, a line having a smallest level difference is detected and is set as a first interpolation line,

at said second interpolation line setting step, said level difference of said first line is compared with a level difference of a seventh line passing through said upper left pixel and said lower right pixel, a line having a smallest level difference is detected and is set as a second interpolation line, and

at said setting method selection step, one of prosecution of either said first interpolation line setting step or said second interpolation line setting step and employment of said first line as the ultimate interpolation line without prosecution of said interpolation line setting step is selected on the basis of said first effective interpolation line information.

5,703,969

SYSTEM AND METHOD FOR RECOGNIZING VISUAL INDICIA

A. Kathleen Hennessey; YouLing Lin; Howard V. Hastings, III; Jerome R. Lovelace, all of Lubbock, Tex., and Ning San Chang, Sunnyville, Calif., assignors to Texas Instruments Incorporated, Dallas, Tex.; Electroglas, Inc., Santa Clara, Calif., and Texas Tech University, Lubbock, Tex.

Continuation of Ser. No. 185,610, Jan. 21, 1994, Pat. No. 5,553,168. This application Feb. 16, 1996, Ser. No. 602,998
Int. Cl.[6] G06K *9/36*
U.S. Cl. 382—276 **9 Claims**

6. A method for identifying visual indicia on a surface comprising the steps of:

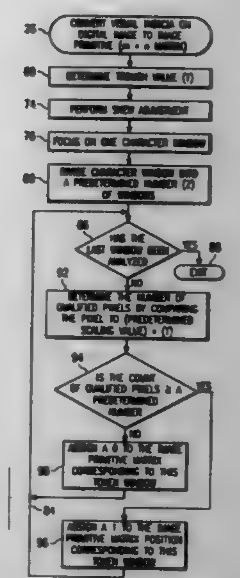

capturing a visual image of a scope-of-view window containing the visual indicia as a digital image;
isolating the visual indicia on the digital image;
converting the isolated visual indicia on the digital image to image primitives;
said step of converting the isolated visual indicia on the digital image to image primitives comprises the steps of:
determining an intensity trough value for the digital image;
performing a skew adjustment;
dividing the scope-of-view window into a predetermined number of token windows;
determining the number of qualified pixels having an intensity value above said trough value in each token window; and
comparing the number of qualified pixels in each token window to a predetermined threshold value and assigning a primitive value of "1" for each token window having more qualified pixels in the token window than the predetermined threshold value and assigning "0" for each token window having less qualified pixels than the predetermined threshold value; and
comparing the image primitives to a plurality of sets of grammar primitives each corresponding to known visual indicia to find the known visual indicia that is most similar to the visual indicia of the visual image.

5,703,970

METHOD OF AND APPARATUS FOR IMPROVED IMAGE CORRELATION

M. Ali Atashroo, Maitland, Fla., assignor to Martin Marietta Corporation, Bethesda, Md.

Filed Jun. 7, 1995, Ser. No. 487,832
Int. Cl.[6] G06K *9/64*
U.S. Cl. 382—278 **16 Claims**

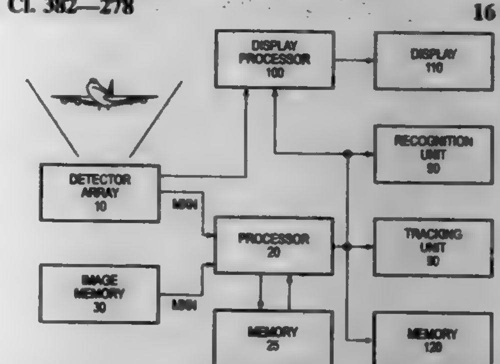

1. A method of correlating a first image and a second image, said first image being in the form of a first real array having a size M by N and said second image being in the form of a second real array

having a size M by N, M and N being positive integers, the method comprising the computer implemented steps of:
(a) performing a first domain transform on said first real array to produce a first complex array having a size M by (N/2+1);
(b) performing a second domain transform on said second real array to produce a second complex array having a size M by (N/2+1);
(c) multiplying a conjugate of said first complex array by said second complex array to produce an intermediate complex array having a size M by (N/2 +1);
(d) performing a first inverse domain transform on each of the columns of the intermediate complex array to produce an inverse transformed intermediate complex array;
(e) producing an supplemented complex array having size M by N from said inverse transformed intermediate complex array by determining elements for additional columns by symmetry for each row;
(f) performing a second inverse domain transform on each of the M rows of said supplemented complex array to produce a real correlation matrix having a size M by N; and
(g) correlating said first image and said second image on the basis of said real correlation matrix.

5,703,971

PROCESS AND DEVICE FOR ANALYZING AND RESTORING IMAGE DATA IN A DIGITAL SIGNAL FROM A SCANNED DOCUMENT

Nikos Asimopoulos, 201 Cherokee Dr.; Alexander Michael Barry, 205D Tee St., and Morton Nadler, 414 Stonegate Dr., all of Blacksburg, Va. 24060

Continuation of Ser. No. 41,812, Apr. 1, 1993, abandoned. This application Feb. 23, 1995, Ser. No. 393,257
Int. Cl.[6] G06K *9/20*
U.S. Cl. 382—282 **14 Claims**

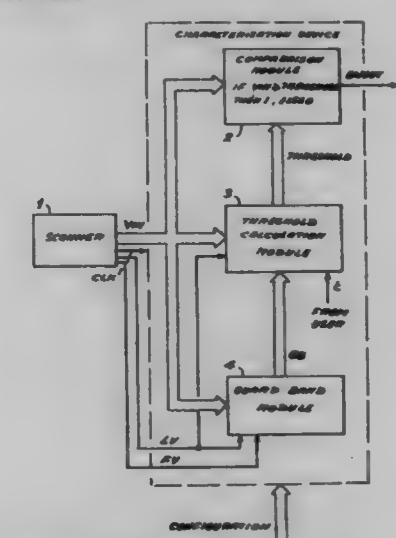

1. An image scanning device comprising:
a) a scanning reading device for scanning a document and for providing a primary digital image data signal representative of pixel intensity values for each discrete pixel of said scanned document; and
b) a binarizing device for binarizing said primary image data signal, including means for adjusting a threshold value to each pixel and means for comparing each of said pixel intensity values with the threshold value associated to the pixel and for delivering a binary image signal based on said comparison,
said threshold adjusting means comprising means for assigning to each pixel a background parameter value and an information parameter value, wherein said assigning means comprises

window memory means for memorizing said background and information parameter values assigned to at least one of the previously scanned pixels situated immediately adjacent to the current pixel,
first decaying means for diminishing the stored background parameter value assigned to said one of said previously scanned pixels and providing the diminished result as a decayed background level and an associated first setting means for setting the background parameter of the current pixel at a value which is the highest one of the intensity value of the current pixel and said decayed background level,
second decaying means for increasing the stored information parameter value assigned to said one of said previously scanned pixels and providing the increased result as decayed information level, and associated second setting means for setting the information parameter of the current pixel at a value which is the lowest one of the intensity value of the current pixel and said decayed information level,
means for calculating the threshold value as a function of said set current background and information parameter values, and
means for providing a guard band value, and means responding to the difference between the stored background and information parameter values of at least one of said previously scanned pixels for disabling said first and second decaying means whenever said difference is lower than said guard band value.

5,703,972

CERTIFIABLE OPTICAL CHARACTER RECOGNITION

Daniel P. Lopresti, Hopewell, N.J.; Henry F. Korth, Ambler, Pa.; Jonathan S. Sandberg, New York, N.Y., and Richard J. Lipton, Cranbury, N.J., assignors to Panasonic Technologies, Inc., Princeton, N.J.

Continuation of Ser. No. 223,830, Apr. 6, 1994, Pat. No. 5,625,721, which is a continuation of Ser. No. 958,938, Oct. 9, 1992, abandoned. This application Nov. 17, 1995, Ser. No. 560,299
Int. Cl.[6] G06K *9/03*
U.S. Cl. 382—310 **13 Claims**

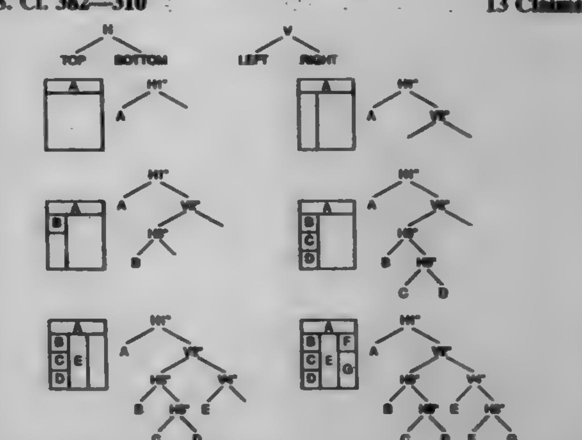

1. An information medium adapted to be scanned by a machine to recover a machine representation of a spatial relationship of blocks in said medium, comprising:
a plurality of machine-rendered blocks arranged in said medium including at least one textblock of multiple lines of human recognizable characters and another block containing human recognizable information; and
at least one non-textual machine-readable marker representative, at least in part, of a machine-representation of a spatial relationship of said machine-rendered blocks in said medium machine-derived when said blocks are machine-rendered and encoding said spatial relationship of said blocks in said

medium to permit said machine representation of said spatial relationship to be recovered.

5,703,973
OPTICAL INTEGRATED CIRCUIT HAVING PASSIVELY ALIGNED FIBERS AND METHOD USING SAME
Stephen Clement Mettler, Decatur, and Ian Arthur White, Dunwoody, both of Ga., assignors to Lucent Technologies Inc., Murray Hill, N.J.
Filed Mar. 29, 1996, Ser. No. 625,467
Int. Cl.⁶ G02B *6/12*
U.S. Cl. 385—14 **19 Claims**

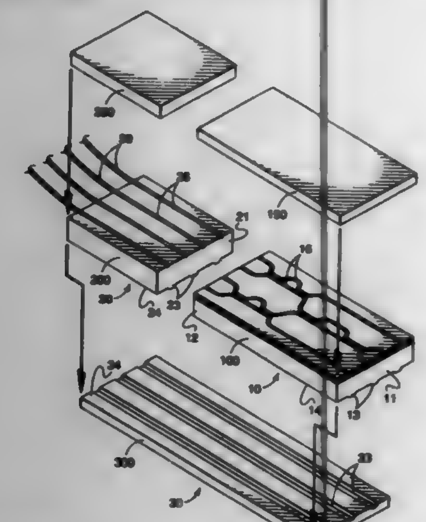

1. In combination:
an optical integrated circuit (OIC) comprising a substrate having a reference surface on its bottom side and a plurality of waveguides on its top side, said waveguides having central axes that reside in a plane that is positioned above the reference surface by an exact predetermined distance, the bottom side of the OIC having an alignment feature for fixing the lateral position of the waveguides;
a fiber array comprising a substrate having a reference surface on its bottom side and a plurality of troughs containing optical fibers on its top side, said optical fibers having central axes that reside in a plane that is positioned above the reference surface by said exact predetermined distance, the bottom side of the fiber array having an alignment feature for fixing the lateral position of the optical fibers; and
a first planar bridging structure having a reference surface on its top side that engages the reference surfaces of the OIC and the fiber array, and holds the waveguides and optical fibers in vertical alignment, the top side of said planar bridging structure having complementary alignment features that engage the alignment features of the OIC and the fiber array and hold them in lateral alignment.

5,703,974
SEMICONDUCTOR PHOTONIC INTEGRATED CIRCUIT AND FABRICATION PROCESS THEREFOR
Tatsuya Sasaki, and Takeshi Takeuchi, both of Tokyo, Japan, assignors to NEC Corporation, Japan
Filed Jul. 12, 1996, Ser. No. 680,290
Claims priority, application Japan, Jul. 13, 1995, 7-199287
Int. Cl.⁶ G02B *6/12;* **H01S** *3/19*
U.S. Cl. 385—14 **6 Claims**

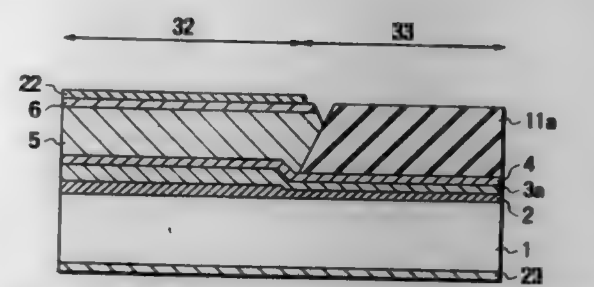

1. A semiconductor photonic integrated circuit comprising:
a first conductive type semiconductor substrate having first region and a second region on the surface thereof;
a first optical waveguide layer formed in mesa form on said first region of said first conductivity type semiconductor substrate;
a second optical waveguide layer formed continuously with said first optical waveguide layer, of a material having larger bandgap energy than said first optical waveguide layer within said second region on said first conductivity type semiconductor substrate;
a high resistance semiconductor layer covering a side surface of said first optical waveguide layer and an upper surface of said second optical waveguide layer; and
a second conductivity type semiconductor layer covering an upper surface of said first optical waveguide.

5,703,975
INTERFEROMETRIC SWITCH
William J. Miller, and Daniel A. Nolan, both of Corning, N.Y., assignors to Corning Incorporated, Corning, N.Y.
Continuation-in-part of Ser. No. 489,090, Jun. 9, 1995, abandoned. This application Jun. 27, 1996, Ser. No. 672,188
Int. Cl.⁶ G02B *6/26*
U.S. Cl. 385—16 **33 Claims**

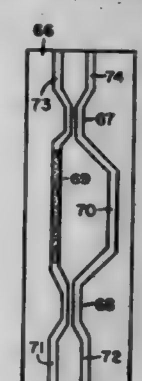

1. A monolithic Mach-Zehnder switch comprising
input coupler means for splitting an input signal into N equal signal components, where N>1,
combining means for combining said N components, said combining means having at least first and second output terminals,
N optical waveguide paths connecting said N signal components to said combining means, at least one of said waveguide paths containing a material having a resonant nonlinearity, whereby the refractive index of the path changes when pump power propagates through it, said input coupler means and said combining means being free from said material, and
a matrix glass body, said input coupler means, said combining means and said optical waveguide paths being in thermal contact with said body.

5,703,976
WAVELENGTH RESONANT FUSED FIBRE COUPLER
Thomas John Cullen, Bishop's Stortford, United Kingdom, assignor to Northern Telecom Limited, Montreal, Canada
Filed Nov. 14, 1995, Ser. No. 557,857
Claims priority, application United Kingdom, Nov. 15, 1994, 9422986
Int. Cl.⁶ G02B *6/26;6/42*
U.S. Cl. 385—28 **11 Claims**

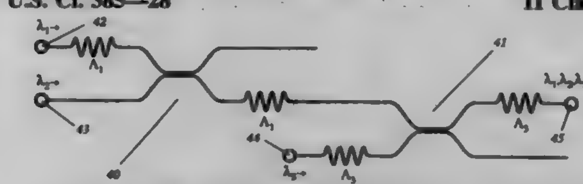

1. A wavelength selective fibre coupler having first and second single mode optical fibres each capable of supporting a core mode and a cladding mode, which coupler is provided with a coupling region through which the core mode of each fibre propagates in a manner effectively uncoupled with the core mode of the other fibre, and in which coupling region the cladding modes of the fibres are optically coupled, which coupler additionally includes a matched pair of spectrally selective resonant core/cladding mode converters provided respectively on the first and second optical fibres respectively upstream and downstream of the coupling region.

5,703,977
INTEGRATED OPTICAL MODE CONVERTER
Jørgen Werngreen Pedersen, Delft, Netherlands, assignor to Koninklijke PTT Nederland N.V., Groningen, Netherlands
Filed Jun. 4, 1996, Ser. No. 659,117
Claims priority, application Netherlands, Jul. 7, 1995, 1000759
Int. Cl.⁶ G02B *6/26*
U.S. Cl. 385—28 **31 Claims**

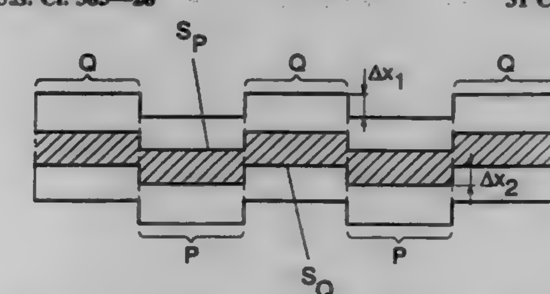

1. An integrated optical mode converter for converting a fraction of a signal component of a light signal propagating according to a first guided mode into a signal component propagating according to a second guided mode, with one of the two guided modes having an even order number and the other of the two guided modes having an odd order number, said integrated optical mode converter comprising:
a channel-shaped waveguide supported by a substrate, in which a periodic coupling takes place between the two guided modes of the light signal propagating in the waveguide,
said waveguide comprising an incoming wave-guiding section, an intermediary wave-guiding section and an outgoing wave-guiding section, and
said intermediary wave-guiding section comprising a periodic concatenation of two wave-guiding subsections per period, a length of the two wave-guiding subsections and a number of periods thereof being tuned to a desired fraction of conversion,
wherein at least one of the two wave-guiding subsections has a waveguide profile including a partial profile which has a deforming effect on a field distribution of one of the two guided modes and which does not substantially affect a field distribution of the other one of the two guided modes.

5,703,978
TEMPERATURE INSENSITIVE LONG-PERIOD FIBER GRATING DEVICES
David John DiGiovanni, Montclair; Justin Boyd Judkins, Berkeley Heights; Janet Renee Pedrazzani, Summit; Ashish Madhukar Vengsarkar, Chatham, and Kenneth Lee Walker, New Providence, all of N.J., assignors to Lucent Technologies Inc., Murray Hill, N.J.
Continuation of Ser. No. 539,473, Oct. 4, 1995, abandoned. This application Aug. 1, 1996, Ser. No. 695,180
Int. Cl.⁶ G02B *6/34;* **H01S** *3/30;* **H04J** *14/02*
U.S. Cl. 385—37 **11 Claims**

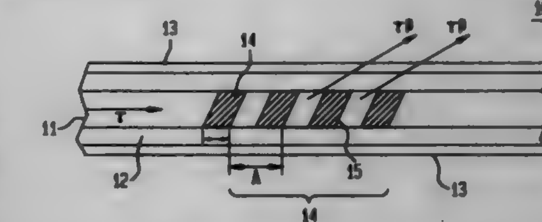

1. A long-period grating device having enhanced stability to variations in temperature comprising:
an optical fiber including a core having a refractive index and a core guided mode with effective index $n_{eff.\ core}$ with a rate of change with respect to temperature $dn_{eff.\ core}/dT$;
a cladding surrounding said core having a cladding mode with effective index $n_{eff.\ cladding}$, less than $n_{eff.\ core}$ and an average rate of change with respect to temperature $dn_{eff.\ cladding}/dT$;
wherein said core has a plurality of perturbations in its refractive index spaced apart by a periodic distance Λ to form a long-period grating with a center wavelength λp;
and wherein $dn_{eff.\ cladding}/dT$ is sufficiently close to $dn_{eff.\ core}/dT$ that the rate of change of λp with respect to temperature is less than 4 nm/100° C.

5,703,979
CYLINDRICAL FIBER PROBE DEVICES
Robert William Filas, Bridgewater, and Herschel Maclyn Marchman, New Providence, both of N.J., assignors to Lucent Technologies Inc., Murray Hill, N.J.
Division of Ser. No. 246,523, May 20, 1994, Pat. No. 5,531,343, which is a continuation-in-part of Ser. No. 173,298, Dec. 22, 1993, abandoned, which is a continuation-in-part of Ser. No. 91,808, Jul. 15, 1993, abandoned. This application Oct. 26, 1995, Ser. No. 548,924
Int. Cl.⁶ G02B *6/26*
U.S. Cl. 385—43 **14 Claims**

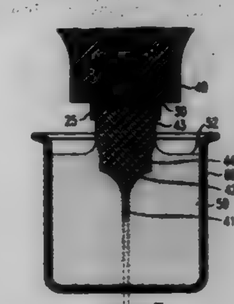

8. A probe device comprising:
a fiber segment having a relatively thick upper cylindrical region terminating in a tapered region that terminates in a relatively thin right cylindrical lower region; the thin right cylindrical lower region having a maximum width in the approximate range of 0.01 μm to 150 μm and terminating at its bottom extremity in an essentially planar end surface oriented perpendicular to the axis of the thin right cylindrical lower region,
the fiber segment having at most one other right cylindrical region, said at most one other right cylindrical region being located above the thick upper cylindrical region.

said at most one other right cylindrical region, said thin right cylindrical lower region, and said relatively thick upper cylindrical region having respective maximum widths that are mutually different from each other.

5,703,980

METHOD FOR LOW-LOSS INSERTION OF AN OPTICAL SIGNAL FROM AN OPTICAL FIBRE TO A WAVEGUIDE INTEGRATED ON TO A SEMICONDUCTOR WAFER

Thomas MacElwee, Nepean; Stephen J. Kovacic, Kanata, and Jugnu J. Ojha, Oakville, all of Canada, assignors to Northern Telecom, Montreal, Canada

Filed Sep. 20, 1996, Ser. No. 710,775

Int. Cl.^{6} G02B *6/30*

U.S. Cl. 385—49 **31 Claims**

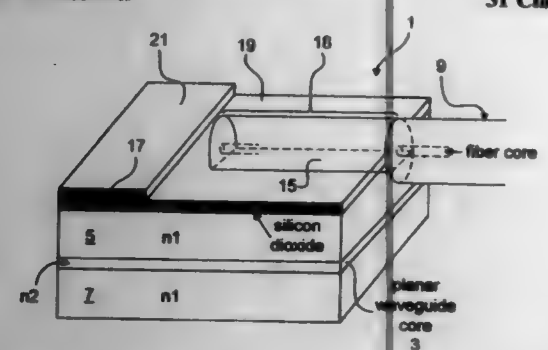

1. An optically coupled arrangement comprising:

an optical waveguide on an opto-electronic integrated circuit, the waveguide having a core, a first cladding underlying the core and a second cladding overlying the core, the second cladding having a first coupling surface;

an optical fiber having a core and a cladding and having a portion of the cladding removed along the length of the fiber to form a second coupling surface, the second coupling surface being held in contact with the first coupling surface;

whereby light propagating in either of the fiber or the waveguide is evanescently coupled between the fiber and the waveguide.

5,703,981

PRE-TERMINATED OPTICAL FIBERS

Michael Dahan, Columbia, and John M. Ehrenreich, Catonsville, both of Md., assignors to Fiber-Com Assemblies, Inc., Hanover, Md.

Filed Dec. 8, 1994, Ser. No. 355,161

Int. Cl.^{6} G02B *6/36*

U.S. Cl. 385—78 **5 Claims**

5. An optical fiber termination structure produced by the following process:

inserting an optical fiber into a hollow axially elongated mold having a precisely centrally located hole at one end and an open end at the other end,

inserting an optical fiber into the open end, through the mold and through the precisely located hole,

said fiber having an outside diameter substantially equal to the inside diameter of said centrally located hole,

injecting a desired ferrule material into said mold about said optical fiber to bond to said fiber, and

polishing the end of the fiber.

5,703,982

RECEPTACLE-TYPE LIGHT MODULE AND LIGHT CONNECTOR COUPLING APPARATUS

Teruo Takizawa, Tokyo, Japan, assignor to NEC Corporation, Japan

Filed Jul. 19, 1996, Ser. No. 690,154

Claims priority, application Japan, Jul. 21, 1995, 7-207652

Int. Cl.^{6} G02B *6/36*

U.S. Cl. 385—78 **15 Claims**

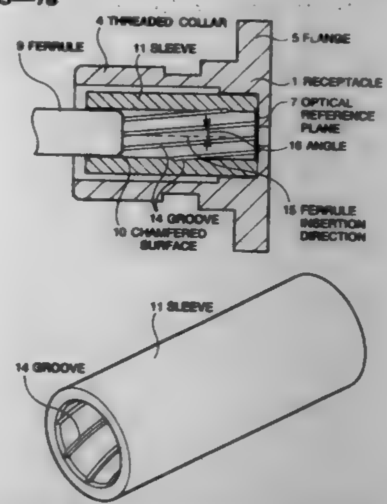

1. A receptacle for being connected to a light connector, the receptacle comprising a sleeve for receiving and holding a ferrule of the light connector and an optical reference plane provided at a bottom position of said sleeve and for abutting against a tip end of said ferrule when said ferrule is completely inserted into said sleeve, said sleeve comprising a plurality of grooves formed on an inner wall surface of said sleeve and extending from a ferrule insertion end of said sleeve towards said optical reference plane, wherein said grooves are parallel to a ferrule insertion direction into said sleeve, said grooves extend to an end of said sleeve continuous with said optical reference plane, and said optical reference plane has grooves formed thereon in communication with said grooves formed on the inner wall surface of said sleeve.

5,703,983

S-Z STRANDED OPTICAL CABLE WITH MID-SPAN ENTRY MARKER

William E. Beasley, Jr., Durham, N.C., assignor to Sumitomo Electric Lightwave Corp., Research Triangle Park, N.C.

Filed Dec. 4, 1996, Ser. No. 760,186

Int. Cl.^{6} G02B *6/44*

U.S. Cl. 385—104 **25 Claims**

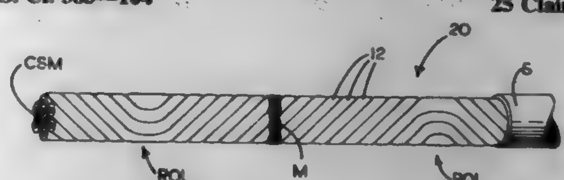

1. A fiber optic cable comprising:

(a) a core containing S-Z stranded strands containing optical fibers having first and second alternatively repeating first and second sections;

(b) a sheath circumscribing the core; and

(c) a plurality of indicators located beneath the sheath and in a medial position between a corresponding plurality of pairs of junctures of first and second strand sections along at least a portion of the length of the cable;

whereby mid-span entry of the fiber optic cable at a selected location along its length and at a juncture of a first and a second strand section is facilitated since a technician opening the fiber optic cable will locate either a desired juncture of the first and

second sections or one of said plurality of indicators that will serve to indicate the relative location of a desired juncture of the first and second sections.

5,703,984

OPTICAL FIBER CABLE WITH PLURAL MODULAR BUNDLES OF HERMTICALLY SEALED OPTICAL FIBERS INSIDE AN OUTER CABLE SHEATH

Michel Carratt, Houilles, and Michel de Vecchis, Vaureal, both of France, assignors to Alcatel Cable, Clichy Cedex, France

Filed Sep. 19, 1995, Ser. No. 530,929

Claims priority, application France, Sep. 23, 1994, 94 11400

Int. Cl.^{6} G02B *6/44*

U.S. Cl. 385—106 **7 Claims**

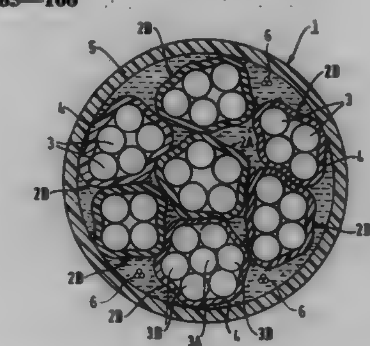

1. An optical fiber cable containing a plurality of optical fibers split up into modules, each of said modules being covered with a supporting sheath in contact with the outer optical fibers of said module so as to hold said optical fibers contained in said module tightly so that they are mechanically coupled to one another, the entire set of said modules being disposed inside a covering made of an insulating material, said covering being in contact with the outer modules of said set of modules so as to form a compact assembly comprising all of said modules;

wherein each of said optical fibers has a cut-off wavelength not longer than 1,350 nm, and, at a wavelength in the vicinity of 1,550 nm, has a mode field diameter lying in the range 7 μm to 9 μm, and wherein each of said optical fibers is provided with a substantially hermetic coating on its optical cladding.

5,703,985

OPTICAL FIBER DEVICE AND METHOD FOR LASER SURGERY PROCEDURES

Zachary E. Owyang, Fremont, Calif., assignor to Eclipse Surgical Technologies, Inc., Sunnyvale, Calif.

Filed Apr. 29, 1996, Ser. No. 638,677

Int. Cl.^{6} G02B *6/06;* **A61B** *17/36*

U.S. Cl. 385—117 **21 Claims**

1. A device for use in laser surgical procedures comprising:

a plurality of optical fibers held together in parallel juxtaposition to form a flexible bundle having a proximal end adopted for connection with a source of laser energy; and

a distal end wherein tips of said fibers are arranged at longitudinal distances apart so that said distal end of the bundle has a generally tapered configuration and is capable of penetrating

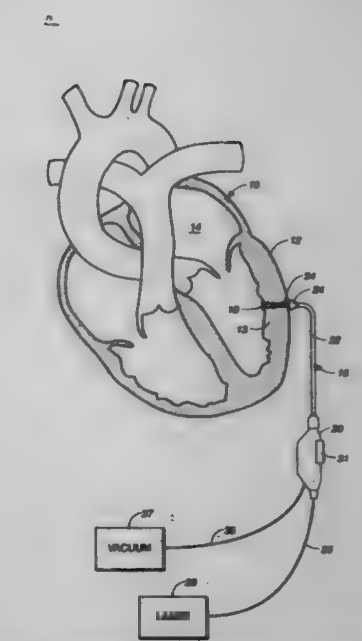

soft tissue or membrane in order to emit laser energy within adjacent tissue.

5,703,986

MONOMODE OPTICAL FIBER

Claude Brehm, Montrouge; Jean-Yves Boniort, Limours; Pascale Nouchi, Villebon Sur Yvette, and Jacques Auge, Saint Cheron, all of France, assignors to Alcatel N.V., Rijswijk, Netherlands

PCT No. PCT/FR95/01711, § 371 Date Aug. 2, 1996, § 102(e) Date Aug. 2, 1996, PCT Pub. No. WO96/20420, PCT Pub. Date Jul. 4, 1996

PCT Filed Dec. 21, 1995, Ser. No. 687,370

Claims priority, application France, Dec. 23, 1994, 94 15554

Int. Cl.^{6} G02B *6/02*

U.S. Cl. 385—123 **4 Claims**

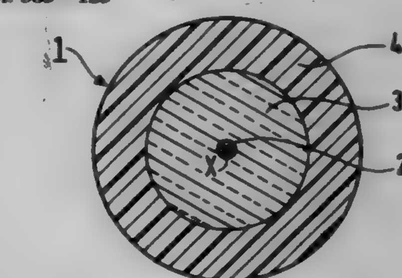

1. A monomode optical fiber comprising an optical core for guiding light waves, surrounded by an optical sheath, the difference between the maximum refraction coefficient of said core and that of said optical sheath being indicated as Δn and the radius of said core being indicated as a, characterised in that:

a $\in[0.6a_c:1.1a_c]$, a_c being provided, in μm, by the formula:

$$a_c = \frac{2.405}{k} \times \frac{1}{\sqrt{2n_g\Delta n}}.$$

where $k=2\pi/\lambda$, λ being, in μm, the wavelength of the transmission, and where n_g is the refraction coefficient of said optical sheath, equal within 10^{-3} to that of pure silica,

Δn is greater than or equal to 0.01,

and in that, ϕ being the diameter of said optical sheath, in μm:

$\phi \in [\phi_{min}:100]$, ϕ_{min} being provided, in μm, by the formula:

$$\phi_{min} = 125 \times \left(\frac{10^{-12}}{2.4 n_g K^2}\right)^{1/8} \frac{[V(0.5862 + 1.8364V^{-3/2} + 3.712V^{-6})]^{1/4}}{(1.1428 - 0.996V^{-1})\Delta n^{5/8}}$$

where

$$V = \frac{2\pi a}{\lambda} \sqrt{2 n_g \Delta n} .$$

5,703,987

RARE EARTH ELEMENT-DOPED MULTIPLE-CORE OPTICAL FIBER AND OPTICAL SYSTEMS USING THE SAME FIELD OF THE INVENTION

Katsuyuki Imoto, Saitama, Japan, assignor to Hitachi Cable, Ltd., Tokyo, Japan

Filed Aug. 12, 1996, Ser. No. 695,493

Claims priority, application Japan, Feb. 22, 1996, 8-035262; Mar. 28, 1996, 8-074793

Int. Cl.⁶ G02B *6/02*

U.S. Cl. 385—126 **13 Claims**

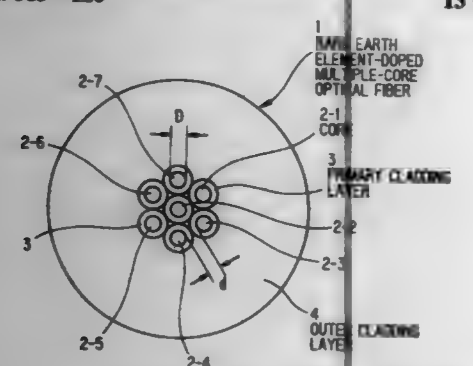

12. A rare earth element-doped multiple-core optical fiber, comprising:
- a plurality of cores each doped with at least one rare earth element and Al therein;
- a plurality of primary cladding layers each having a lower refractive index than said cores, and covering each of said cores; and
- an outer cladding layer having a lower refractive index than said primary cladding layers or the same refractive index as said primary cladding layers, and covering said plurality of cores each covered by said primary cladding layer;
- wherein said cores are positioned substantially on a central axis of said outer cladding layer, at least one of which is surrounded by remaining cores containing a larger amount of rare earth element than said surrounded core.

5,703,988

COATED OPTICAL FIBER AND FABRICATION PROCESS THEREFOR

Kazumasa Oishi; Nobuhiro Akasaka; Tatsuya Kakuta, and Yasuo Matsuda, all of Yokohama, Japan, assignors to Sumitomo Electric Industries, Ltd., Osaka, Japan

PCT No. PCT/JP95/00207, § 371 Date Aug. 6, 1996, § 102(e) Date Aug. 6, 1996, PCT Pub. No. WO95/21800, PCT Pub. Date Aug. 17, 1995

PCT Filed Feb. 14, 1995, Ser. No. 687,497

Claims priority, application Japan, Feb. 15, 1994, 6-018561

Int. Cl.⁶ G02B *6/02;6/22*

U.S. Cl. 385—128 **10 Claims**

1. A process for fabricating a coated optical fiber, comprising:

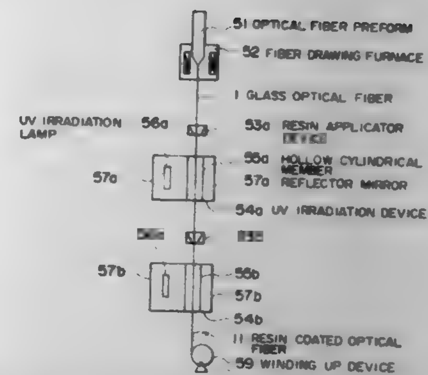

- forming a coated optical fiber comprising a light-transmitting fiber and a resin coating layer disposed on the outer periphery of the light-transmitting fiber;
- imparting an external flaw to the surface of the resin coating layer while running the coated optical fiber, and then subjecting the coated optical fiber to the measurement of a tensile breaking strength thereof; and
- selecting, as a non-defective product, the fiber having a strength retention ratio $R_S = S_A/S_0$ of 0.98 or more, wherein S_A is the median value of the tensile breaking strength after the provision of the external flaw, and S_0 is the median value of the tensile breaking strength before the provision of the external flaw.

5,703,989

SINGLE-MODE WAVEGUIDE STRUCTURE FOR OPTOELECTRONIC INTEGRATED CIRCUITS AND METHOD OF MAKING SAME

Mujibun Nisa Khan, Freehold, and Jane Elisa Zucker, Aberdeen, both of N.J., assignors to Lucent Technologies Inc., Murray Hill, N.J.

Filed Dec. 29, 1995, Ser. No. 580,915

Int. Cl.⁶ G02B *6/10;* **H01L** *21/70*

U.S. Cl. 385—130 **24 Claims**

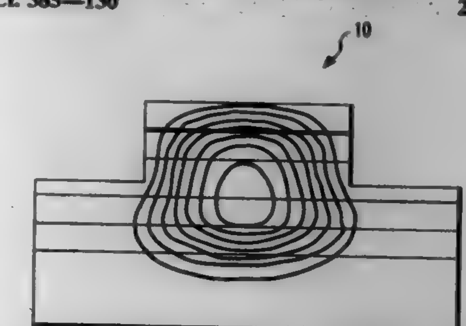

1. An optical waveguide, disposed on a substrate, comprising:
- a core layer having a first index of refraction;
- a first reflective high index cladding layer and a second reflective high index cladding layer bounding said core layer, wherein said core layer is interposed between said first reflective high index cladding layer and said second reflective high index cladding layer, said first reflective high index cladding layer and said second reflective high index cladding layer having a common second index of refraction that is greater than said first index of refraction;
- a first low index cladding layer and a second low index cladding layer bounding said first and second reflective high index cladding layer, wherein said first reflective high index cladding layer and said second reflective high index cladding layer are interposed between said first and second low index cladding layer, said first low index cladding layer and said second low index cladding layer having a common third index of refraction that is less than said second index of refraction;
- wherein said optical waveguide includes a ridge structure that contains said first low index cladding layer, said first reflective high index cladding layer and at least a portion of said core layer therein, said ridge structure being sized to impose lateral confinement for suppressing higher order slab modes and producing an essentially single-mode optical waveguide structure.

11. A method of manufacturing an optical waveguide on a substrate, comprising the steps of:
- depositing a first low index cladding layer on said substrate, having a first index of refraction;
- depositing a first reflective high index cladding layer on said first low index cladding layer, having a second index of refraction;
- depositing a core layer on said first reflective high index cladding layer, having a third index of refraction;
- depositing a second reflective high index cladding layer on said core layer, having an index of refraction substantially equivalent to said first reflective high index cladding layer;
- depositing a second low index cladding layer on said second reflective high index cladding layer, having an index of refraction substantially equivalent to said first low index cladding layer; and
- selectively etching said second low index cladding layer, said second reflective high index cladding layer and at least a portion of said core layer to produce a ridge structure, said ridge structure being sized to impose lateral confinement for suppressing higher order slab modes and producing an essentially single-mode optical waveguide structure.

5,703,990

APPARATUS FOR HOUSING A LINEARIZED OPTICAL FIBER AMPLIFIER

Derek Guy Robertson, Nashville, and Marcus W. Shute, Lithonia, both of Ga., assignors to Lucent Technologies Inc., Murray Hill, N.J.

Filed Mar. 14, 1996, Ser. No. 616,045

Int. Cl.⁶ G02B *6/00*

U.S. Cl. 385—135 **15 Claims**

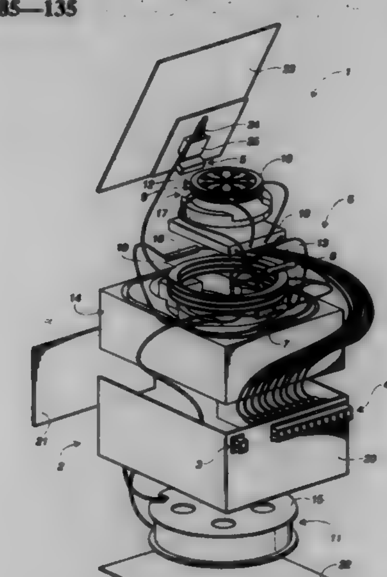

1. An apparatus for housing a linearized optical fiber amplifier (LOFA) having a plurality of individual components, said apparatus comprising:
- a body member having first and second sides; and
- a first cavity in said first side and a plurality of cavities in said second side, said plurality of cavities defining different levels within said second side of said body member at least one of said cavities being configured to receive one or more of the components of the LOFA circuit.

5,703,991

OPTICAL PART MODULE REDUCED IN SIZE AND PRINTED BOARD PACKAGE HAVING SUCH AN OPTICAL PART MODULE

Shigeichi Izumi, Kawasaki, Japan, assignor to Fujitsu Limited, Kanagawa, Japan

Filed Feb. 14, 1996, Ser. No. 601,572

Claims priority, application Japan, Aug. 22, 1995, 7-213286

Int. Cl.⁶ G02B *6/00;* **B65H** *18/28*

U.S. Cl. 385—135 **15 Claims**

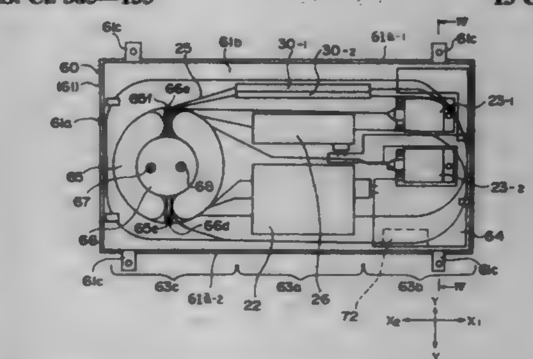

1. An optical part module comprising:
- a case;
- a plurality of optical parts provided in said case;
- an optical fiber connecting said optical parts, said optical fiber having a predetermined length which creates a large play in length; and
- a bobbin provided in said case, a part of said optical fiber creating said play in length being wound on said bobbin, said part of said optical fiber being wound while turning said bobbin upside down for each single turn of the winding so that twist generated in said optical fiber due to winding is canceled.

5,703,992

METHOD AND APPARATUS FOR PACKAGING OPTICAL COMPONENTS

Ernest Eisenhardt Bergmann, Fountain Hill, Pa., assignor to Lucent Technologies Inc., Murray Hill, N.J.

Filed Dec. 26, 1995, Ser. No. 578,365

Int. Cl.⁶ G02B *6/00*

U.S. Cl. 385—139 **25 Claims**

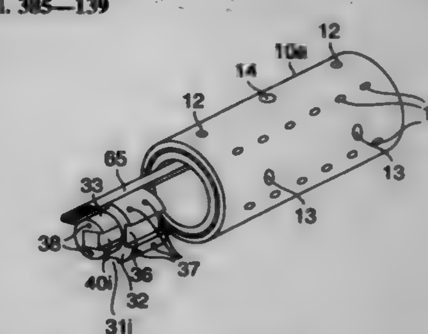

7. An optical package that contains at least a first part of an optical system, the optical package comprising:
- a container having a first and a second end;
- a rail that fits within the container;
- a plurality of optical components mounted on a plurality of optical mounts, the optical components collectively defining the first part of the optical system, wherein each mount is physically adapted to fit within the container and slidingly engage the rail, and wherein, when engaged, the optical mounts and the rail are in a first position within the container;
- at least a first optical fiber terminating near the first end of the container, which optical fiber is in optical communication with the optical system within the container along an optical axis; and

a device that prevents the rail and the engaged optical mounts from rotating from the first position within the container.

5,703,993
RGB ENCODER FOR CONVERTING DIGITAL SIGNALS TO ANALOG SIGNALS AND ACTIVATING DEACTIVATING D/A CONVERTERS ACCORDING TO A MODE SIGNAL

Masahito Kondo, and Kyoji Marumoto, both of Kyoto, Japan, assignors to Rohm Co., Ltd., Kyoto, Japan
Filed Jun. 6, 1996, Ser. No. 659,490
Claims priority, application Japan, Jun. 8, 1995, H7-141638
Int. Cl.⁶ H04N *9/87;3/27*
U.S. Cl. 386—35 **8 Claims**

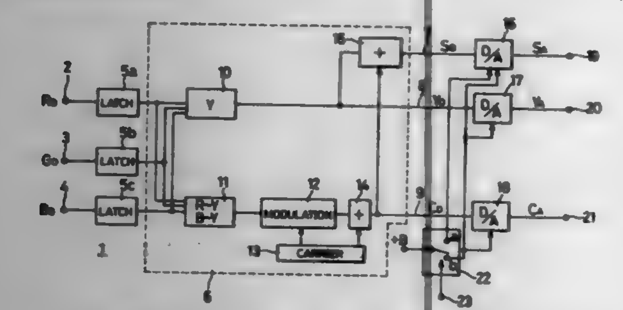

1. An encoder for converting digital RGB signals into analog television signals, comprising;
RGB input terminals;
a circuit for forming digital composite, luminance and chrominance signals based on R, G and B digital signals input through said RGB input terminals;
a first, a second and a third D/A converters for converting said digital composite, luminance and chrominance signals into corresponding analog signals;
a first, a second and a third output terminals for outputting an analog-converted composite, luminance and chrominance signals, respectively;
a mode terminal for inputting a mode signal; and
a selecting circuit for activating required ones of said D/A converters and deactivating others of said D/A converter according to said mode signal.

5,703,994
INDEX PROCESSOR FOR DIGITAL VCR AND METHOD THEREFOR

Doo Hee Lee, Kyungki-do, and Tae Seok Yang, Seoul, both of Rep. of Korea, assignors to LG Electronics Inc., Seoul, Rep. of Korea
Filed Aug. 4, 1995, Ser. No. 511,602
Claims priority, application Rep. of Korea, Aug. 10, 1994, 19680/1994
Int. Cl.⁶ H04N *5/76*
U.S. Cl. 386—52 **8 Claims**

1. An index processing method for a digital VCR comprising the steps of:
editing index data in an index recording mode according to a user designation;
recording the index data on the end portion of a program when the program has been recorded on an index recording region;
moving to the recording region of the index data recorded on a video tape when an eject key is input; and

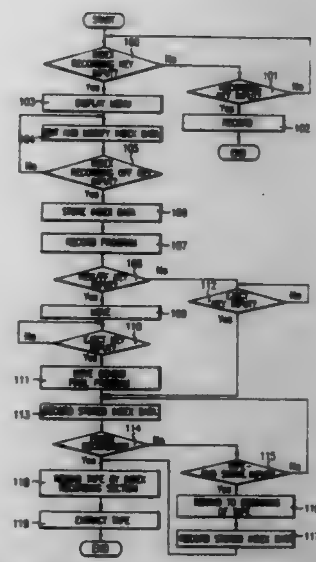

reproducing a user-selected program according to the index data recorded on the video tape in an index reproducing mode, and recording a modified index.

5,703,995
METHOD AND SYSTEM FOR PRODUCING A PERSONALIZED VIDEO RECORDING

George M. Willbanks, 2999 Comfort Rd., New Hope, Pa. 18938
Filed May 17, 1996, Ser. No. 649,223
Int. Cl.⁶ H04N *5/93;* **G11B** *27/00*
U.S. Cl. 386—52 **20 Claims**

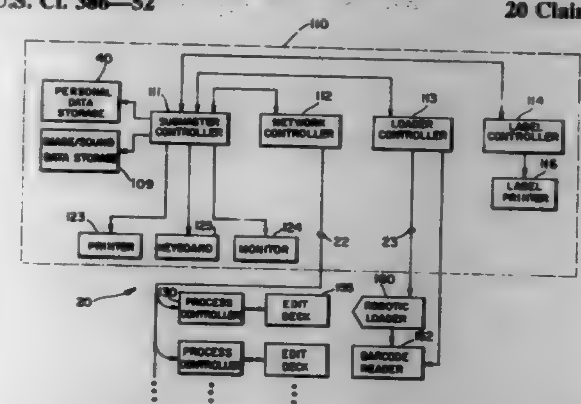

1. A system for locating an insert location within a video prerecording and inserting personalized information therein, comprising:
a personal data storage device for storing personal data pertaining to each of a plurality of individuals;
a custom information storage device for storing a plurality of different images;
a master controller connected with the personal data storage device for selecting one of said stored images to be recorded at an insert location on a video recording, said image being selected with reference to personal data pertaining to one of said plurality of individuals;
an edit deck for receiving the video prerecording, said edit deck having a control terminal for receiving operation control signals, a video output terminal for providing a video output signal, and a video input terminal for receiving a video input signal; and
a process controller connected with the control terminal for providing operation control signals to the edit deck, said process controller including a video digitizer for digitizing successive prerecorded images on the video prerecording and for detecting an insert location by comparing successive digitized video images with a predetermined statistical criterion that is indicative of an insert location, said process controller being responsive to the master controller for retrieving the stored images and for providing the retrieved image to the video input terminal when an insert location has been detected.

5,703,996
VIDEO REPRODUCTION DEVICE

Kazuhiko Omura, Tokai; Masayoshi Iguchi, Nagoya; Masatoshi Yoshiyama, Nagoya, and Hiroshi Nishikawa, Nagoya, all of Japan, assignors to Brother Kogyo Kabushiki Kaisha, and Xing Inc., both of Nagoya, Japan
Filed Feb. 3, 1995, Ser. No. 383,099
Claims priority, application Japan, Feb. 4, 1994, 6-012607
Int. Cl.⁶ H04N *5/91*
U.S. Cl. 386—68 **19 Claims**

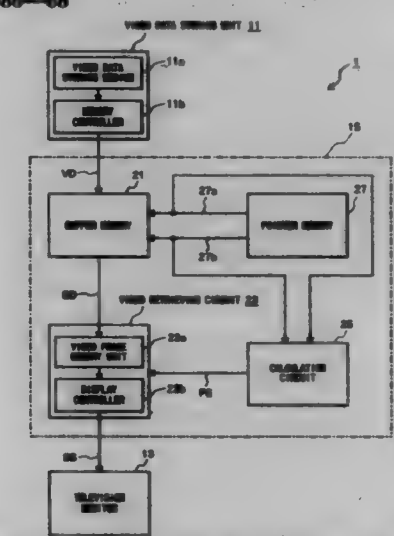

1. A video reproduction device for reproducing video data from a video storing medium, the dvice comprising:
data temporary storing means for receiving video data supplied from a video data storing medium and for temporarily storing the video data;
data reproducing means for retrieving the video data from the data temporary storing means and for reproducing images;
reproduction speed determining means for determining a reproduction speed, at which the data reproducing means retrieves the video data from the data temporary storing means and reproduces the corresponding moving picture, to have a value selected from one of a first predetermined value and a second predetermined value lower than the first predetermined value, dependently on an amount of the video data being stored in the temporary storing means; and
reproduction control means for controlling the reproducing means to retrieve the video data from the data temporary storing means at the determined reproduction speed and to reproduce the moving pictures with the determined reproduction speed, the data reproduction means controlled to retrieve the video data at the first predetermined speed reproducing a normal moving picture with the first reproduction speed, the data reproducing means controlled to retrieve the video data at the second predetermined reproduction speed reproducing a still picture with the second reproduction speed, thereby allowing the data reproducing means to continuously reproduce images regardless of whether the supply of the video data from the data storing medium is stopped.

5,703,997
DATA RECORDING MEDIUM HAVING REPRODUCTION TIMING INFORMATION, AND SYSTEM FOR REPRODUCING RECORD DATA BY USING THE REPRODUCTION TIMING INFORMATION

Tetsuya Kitamura, Komae, and Hideki Mimura, Yokohama, both of Japan, assignors to Kabushiki Kaisha Toshiba, Kawasaki, Japan
Filed Apr. 11, 1996, Ser. No. 630,763
Claims priority, application Japan, Apr. 14, 1995, 7-114007
Int. Cl.⁶ H04N *5/91*
U.S. Cl. 386—97 **23 Claims**

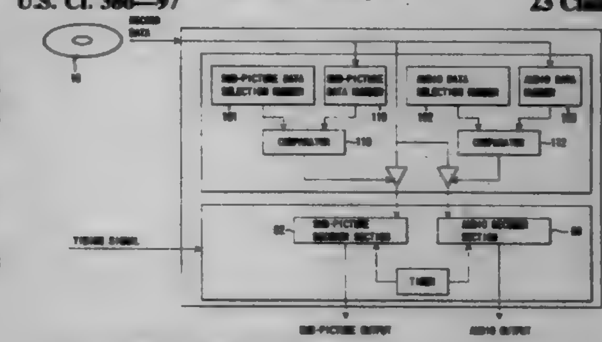

1. A recording medium comprising:
video data to be reproduced as a moving picture;
first audio data to be reproduced along with said video data, said first audio data being in a first language;
first sub-picture data which is adapted to be presented along with said first audio data and that is selectively set in one of a presentation mode and a non-presentation mode in association with said first audio data, said first sub-picture data presenting sub-picture information in said first language; and
control information for forcibly presenting without user's intervention said first sub-picture data in a predetermined time slot of a reproduction time sequence during which said first audio data is reproduced, even if said first sub-picture data is set in said non-presentation mode so that said first sub-picture information is presented without using additional sub-picture data associated with said first language duplicating said first sub-picture data.

5,703,998
HOT WATER TANK ASSEMBLY

Charles M. Eckman, Dallas, Pa., assignor to Energy Converters, Inc., Dallas, Pa.
Filed Oct. 20, 1994, Ser. No. 326,512
Int. Cl.⁶ F24H *7/00;1/20*
U.S. Cl. 392—340 **2 Claims**

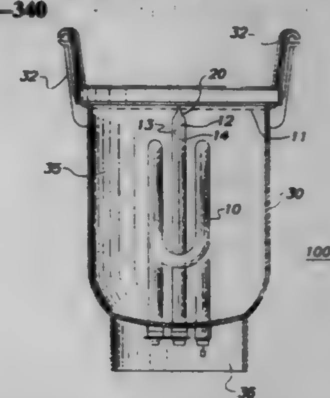

1. A method of heating water dispensed from a portable water cooler dispenser, comprising:
providing a hot water heater including a polymer storage tank for containing water, a heating element for providing electric resistance heating to a portion of the water in said storage tank, said heating element having at least a first and a second resistance wire, said first and second resistance wires capable

of heating said water to a temperature of less than 200° F., and said second resistance wire capable of maintaining said water at said first temperature when said first resistance wire is deactivated; and thermostatic temperature control means for consecutively disconnecting electric current to said first and second resistance wires when said water achieves a temperature of about 190°–200° F. at at least two depths in said water;
providing water into said storage tank; and
electrically activating said first and second resistance wires to heat said water in said storage tank to said first temperature; and
deactivating said first resistance wire while said second resistance wire maintains said water at said hot beverage temperature in substantially a steady-state condition.

5,703,999
PROCESS FOR REDUCING DATA IN THE TRANSMISSION AND/OR STORAGE OF DIGITAL SIGNALS FROM SEVERAL INTERDEPENDENT CHANNELS

Jurgen Herre, Buckenhof; Dieter Seitzer; Karl-Heinz Brandenburg, both of Erlangen, and Ernst Eberlein, Grossenseebach, all of Germany, assignors to Fraunhofer-Gesellschaft zur Foerderung der angewandten Forschung e.V., Germany

Continuation of Ser. No. 338,618, Feb. 8, 1995. This application Nov. 18, 1996, Ser. No. 751,456
Claims priority, application Germany, May 25, 1992, 42 17 276.4
Int. Cl.⁶ G10L *3/00*
U.S. Cl. 395—2.12 **13 Claims**

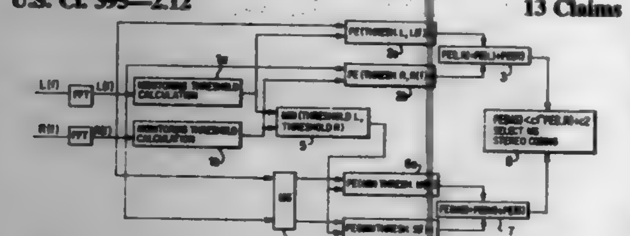

1. Process for reducing data for transmission or storage of digital audio signals from several interdependent channels, in which blocks of samples of signals in the respective channels are transformed from time domain into a frequency domain representation, whereby a value is determined for each of a plurality of frequency components in each channel, and the values determined for the respective frequency components are coded, taking account a masking threshold determined by means of a psychoacoustic model, said process comprising the steps of:
determining a first data rate necessary for separate coding of signals in each of the respective channels, said first data rate being determined collectively for all frequency components of signals in said respective channels;
determining a second data rate necessary for joint coding of said signals in the respective channels, said second data rate being determined collectively for all frequency components of signals in said respective channels;
comparing said first and second data rates;
performing joint coding of said signals for all frequency components of the respective channels so long as the data rate necessary for joint coding of said signals does not exceed the data rate necessary for separate coding by a predetermined threshold value; and
performing separate coding of said signals for all frequency components of the respective channels, when the data rate necessary for joint coding of said signals exceeds the data rate necessary for separate coding by at least said predetermined value.

5,704,000
ROBUST PITCH ESTIMATION METHOD AND DEVICE FOR TELEPHONE SPEECH

Kumar Swaminathan, Gaithersburg, and Murthy Vemuganti, Germantown, both of Md., assignors to Hughes Electronics, Los Angeles, Calif.

Filed Nov. 10, 1994, Ser. No. 337,595
Int. Cl.⁶ G10L *5/00*
U.S. Cl. 395—2.16 **15 Claims**

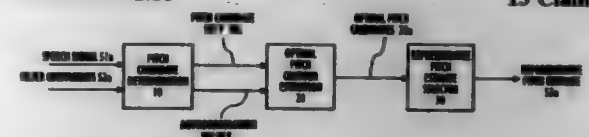

1. A method of estimating the pitch of a digitized speech signal comprising the steps of:
determining a set of pitch candidates to estimate the pitch of the digitized speech signal at each of a plurality of time instants, wherein series of the time instants define segments of the digitized speech signal;
constructing a pitch contour for the digitized speech signal segments using a selected pitch candidate from each of the sets of pitch candidates;
selecting a representative pitch estimate for each of the digitized speech signal segments from the selected pitch candidates constituting the pitch contour by calculating a distance metric value for each pair of selected pitch candidates.

5,704,001
SENSITIVITY WEIGHTED VECTOR QUANTIZATION OF LINE SPECTRAL PAIR FREQUENCIES

William R. Gardner, San Diego, Calif., assignor to QUALCOMM Incorporated, San Diego, Calif.

Filed Aug. 4, 1994, Ser. No. 286,150
Int. Cl.⁶ G10L *9/14*
U.S. Cl. 395—2.28 **33 Claims**

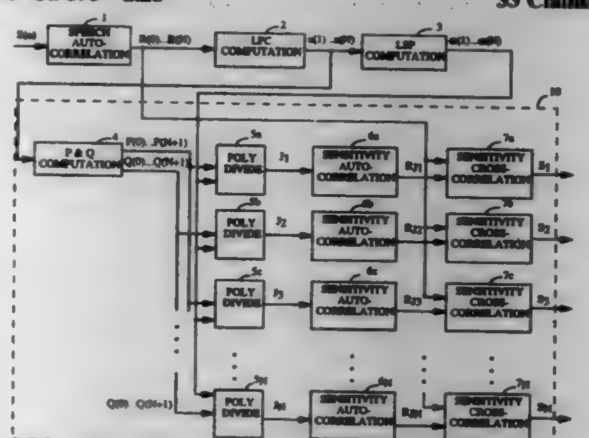

1. An apparatus for efficient determination of LSP quantization sensitivities using closed form analysis, comprising:
polynomial division means for receiving a set of line spectral pair (LSP) frequencies and a set of linear prediction coding (LPC) coefficients and for generating a set of quotient coefficients in accordance with a predetermined polynomial division format; and
sensitivity cross correlation means for receiving said set of quotient coefficients and a set of speech auto correlation coefficients and for computing a set of LSP sensitivity coefficients in accordance with a weighted cross-correlation computation format.

5,704,002
PROCESS AND DEVICE FOR MINIMIZING AN ERROR IN A SPEECH SIGNAL USING A RESIDUE SIGNAL AND A SYNTHESIZED EXCITATION SIGNAL

Dominique Massaloux, Perros-Guirec, France, assignor to France Telecom Etablissement autonome de droit public, Paris, France

Filed Mar. 4, 1994, Ser. No. 205,570
Claims priority, application France, Mar. 12, 1993, 93 02881
Int. Cl.⁶ G10L *9/14*
U.S. Cl. 395—2.29 **12 Claims**

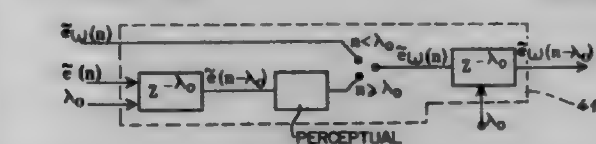

6. A method for processing a speech signal with a closed loop long term prediction mechanism, comprising the steps of:
transducing an acoustic signal to generate a digital speech input signal;
processing said digital speech input signal with a processing mechanism to obtain a residue signal, r(n);
obtaining a synthesis excitation signal $\tilde{e}(n-\lambda)$ which is continuous at a beginning of a subblock;
calculating an error expression $e(n)=h_g(n)*(r(n)-\beta\tilde{e}(n-\lambda))$, where β is an optimum gain associated with each delay, λ, of a set of delays, and $h_g(n)$ is a transfer function of a perceptual filter mechanism, wherein
said calculating step comprising the step of minimizing an error based on said error expression, e(n).

5,704,003
RCELP CODER

Willem Bastiaan Kleijn, Basking Ridge, and Dror Nahumi, Ocean, both of N.J., assignors to Lucent Technologies Inc., Murray Hill, N.J.

Filed Sep. 19, 1995, Ser. No. 530,040
Int. Cl.⁶ G10L *5/00*
U.S. Cl. 395—2.29 **5 Claims**

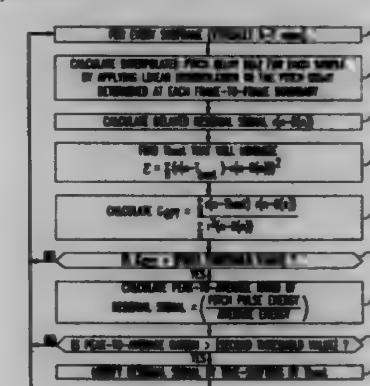

1. A method of speech coding for use in conjunction with speech coding methods wherein speech is digitized into a plurality of temporally defined frames, each frame having a plurality of sub-frames including a current sub-frame present during a specified time interval, each frame having a pitch delay value specifying the change in pitch with reference to the immediately preceding frame, each sub-frame including a plurality of samples, and the digitized speech is partitioned into periodic components and a residual signal; the improved method of speech coding comprising the steps of:
(a) for each of a plurality of sub-frames of the residual signal, determining a time shift T based upon (i) the current sub-frame of the residual signal, and (ii) a delayed residual signal from a previously-occurring frame; and
(b) applying the time shift T determined in step (a) to the current sub-frame of the residual signal.

5,704,004
APPARATUS AND METHOD FOR NORMALIZING AND CATEGORIZING LINEAR PREDICTION CODE VECTORS USING BAYESIAN CATEGORIZATION TECHNIQUE

Tze Fen Li, Kaohsiung; Chung-Mou Pengwu; Cheng-Der Chen, both of Taipei, and Chung-Yu Sun, Hsinchu, all of Taiwan, assignors to Industrial Technology Research Institute, Taipei, Taiwan

Continuation of Ser. No. 160,580, Dec. 1, 1993, abandoned. This application Jan. 21, 1997, Ser. No. 786,551
Int. Cl.⁶ G10L *3/00*
U.S. Cl. 395—2.52 **14 Claims**

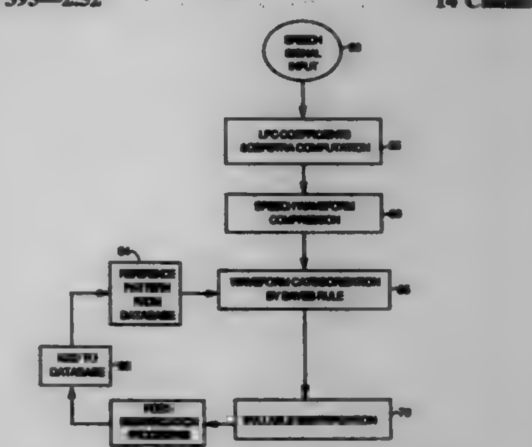

1. A pattern matching system provided for performing a sequence of single syllables recognition comprising:
a dictionary means for storing a plurality of standard patterns wherein each of said standard patterns representing a single standard syllable by a set of feature vectors C(1), C(2), C(3), . . . , and C(M) and M being a positive integer;
a converting means for converting an input pattern representing single unknown syllable into a categorizing pattern for representing said single unknown syllable in a set of categorizing vectors X where X={x(1), x(2),x(3), . . . ,x(k)} where k representing a positive integer; and
a Bayesian-decision-rule categorizing means for computing a conditional normal density function ƒ(x| Ci) for each of said feature vectors Ci, wherein said function ƒ(x| Ci) having a normal distribution and said x(1), x(2), x(3), . . . and x(k) are stochastically independent; and
said Bayesian-decision-rule categorizing means further employing functional parameters of said normal distribution for said normal density function ƒ(x| Ci) to apply a Bayesian decision rule to deterministically identify said single unknown syllable with one of said standard single syllables.

5,704,005
SPEECH RECOGNITION APPARATUS AND WORD DICTIONARY THEREFOR

Hitoshi Iwamida, Kawasaki, Japan, assignor to Fujitsu Limited, Kawasaki, Japan

Filed Jan. 25, 1995, Ser. No. 377,727
Claims priority, application Japan, Jan. 28, 1994, 6-008079
Int. Cl.⁶ G10L *5/06*
U.S. Cl. 395—2.63 **19 Claims**

1. A speech recognition apparatus comprising:
a word dictionary storing and managing subword sequences of words and information indicating an importance of each subword in each word, said importance indicating whether or not

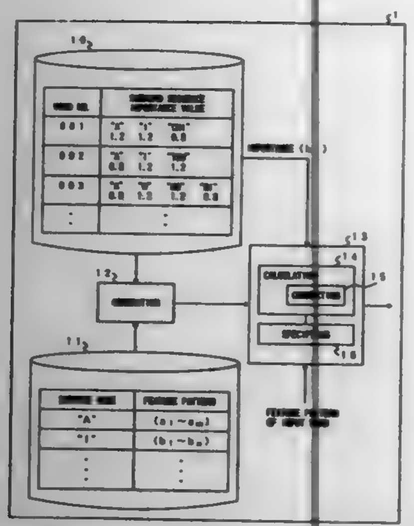

each subword of each word is an important factor when recognizing each word, said importance being independent for each of the words;
managing means for managing standard values of acoustic feature patterns of each subword;
generating means, coupled to said word dictionary and said managing means, for successively reading the subword sequences of the words stored in said word dictionary and for generating acoustic feature patterns of each word using the standard values managed by said managing means; and
collating means coupled to said word dictionary and said generating means, for calculating and evaluating distances between an acoustic feature pattern of an input word that is to be recognized and each of the acoustic feature patterns generated by said generating means by referring to said information.

5,704,006

METHOD FOR PROCESSING SPEECH SIGNAL USING SUB-CONVERTING FUNCTIONS AND A WEIGHTING FUNCTION TO PRODUCE SYNTHESIZED SPEECH

Naoto Iwahashi, Kanagawa, Japan, assignor to Sony Corporation, Tokyo, Japan

Filed Sep. 12, 1995, Ser. No. 527,142

Claims priority, application Japan, Sep. 13, 1994, 6-246867

Int. Cl.⁶ G10L *5/04*

U.S. Cl. 395—2.68 **29 Claims**

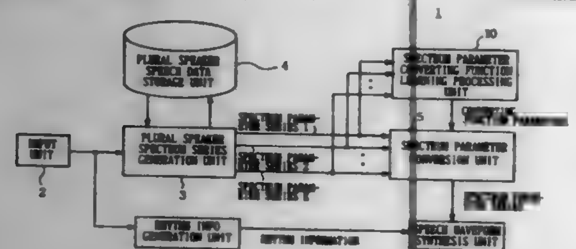

1. A method for processing an input speech signal comprising the steps of:
receiving M-dimensional input vectors;
converting said M-dimensional input vectors to N output vectors in accordance with a predetermined parameter converting function;
said parameter converting function comprises a plurality of sub-converting functions and a weighting function for setting weighting coefficients on a space of said input vectors, said weighting function including a radial basis function having non-increasing output value for an increase in the distance between a central vector of the M-dimension defined on said input vector space and each said input vector;
said step of converting said M-dimensional input vectors to said N output vectors comprises the steps of converting said input vectors using said plurality of sub-converting functions to generate respective conversion outputs;
giving said weighting coefficients to said conversion outputs to generate weighted conversion outputs; and
calculating the sum of said weighted conversion outputs to derive output vectors representative of the phonemes in said input speech signal.

5,704,007

UTILIZATION OF MULTIPLE VOICE SOURCES IN A SPEECH SYNTHESIZER

Mark L. Cecys, San Jose, Calif., assignor to Apple Computer, Inc., Cupertino, Calif.

Continuation of Ser. No. 212,488, Mar. 11, 1994, abandoned. This application Oct. 4, 1996, Ser. No. 727,845

Int. Cl.⁶ G10L *5/02;9/00*

U.S. Cl. 395—2.69 **21 Claims**

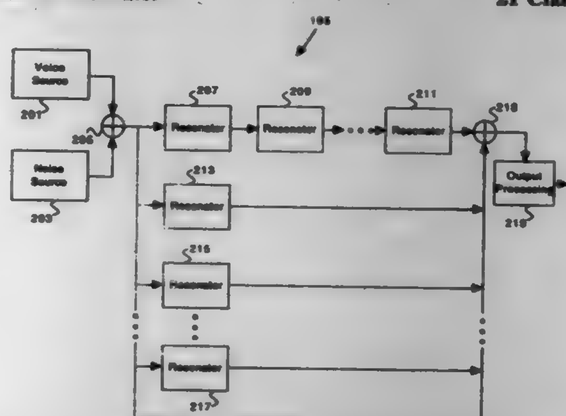

5. An apparatus for generating synthetic text-to-speech, the apparatus comprising:
means for generating a set of speech synthesizer control parameters representative of text to be spoken; and
means for converting the speech synthesizer control parameters into output wave forms representative of the synthetic speech to be spoken by means for selecting and combining at least two voice sources from a multiplicity of voice sources in a speech synthesizer to generate a combined voice source and means for passing the combined voice source through an acoustic model of a human vocal tract.

5,704,008

METHOD OF AND APPARATUS FOR MOTOR VEHICLE SECURITY ASSURANCE EMPLOYING VOICE RECOGNITION CONTROL OF VEHICLE OPERATION

William Robert Duvall, Jr., Sudbury, Mass., assignor to LoJack Corporation, Dedham, Mass.

Filed Dec. 13, 1993, Ser. No. 166,580

Int. Cl.⁶ G10L *3/00*

U.S. Cl. 395—2.82 **21 Claims**

5. A method of providing voice recognition motor vehicle security, that comprises, inserting a circuit-interrupting starter kill device permanently in the vehicle engine starter and/or ignition circuit that is normally started with a key switch; connecting a voice recognition module to the starter and/or ignition circuit normally to maintain the circuit open-circuited; and introducing an authorized vehicle user's voice, spoken within the vehicle, to the voice recognition module, first to enable the learning and storage of the authorized user's voice pattern and commands, and then subsequently to respond to the receipt of the authorized user's voice, uttered when desiring to start the vehicle engine, to cause

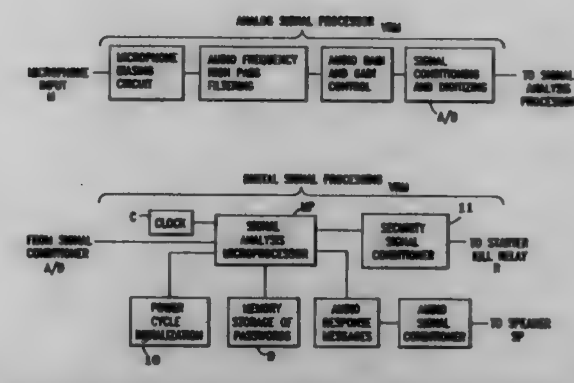

the starter kill device to cease interrupting the starter and/or ignition circuit and to close the same, thereby enabling the starting of the engine by said authorized user, and in which the user adds another new authorized user by first speaking to establish identity with the voice recognition module, and then speaking to introduce a new user, and with the new user then speaking to enable the new user's voice to be learned and stored by the voice recognition module.

5,704,009

METHOD AND APPARATUS FOR TRANSMITTING A VOICE SAMPLE TO A VOICE ACTIVATED DATA PROCESSING SYSTEM

Troy Lee Cline, Cedar Park; Scott Harlan Isensee, Georgetown; Ricky Lee Poston, Austin, all of Tex., and Jon Harald Werner, Oceanside, Calif., assignors to International Business Machines Corporation, Armonk, N.Y.

Filed Jun. 30, 1995, Ser. No. 497,302

Int. Cl.⁶ G10L *9/06*

U.S. Cl. 395—2.84 **11 Claims**

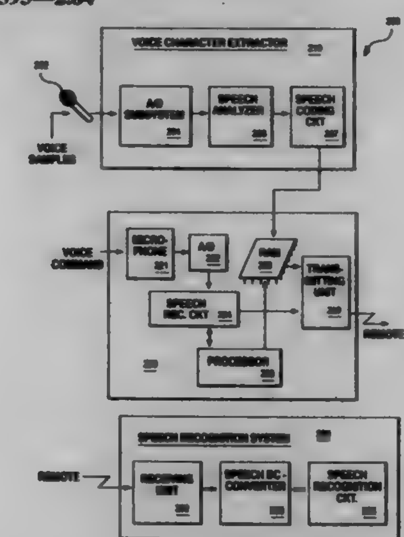

1. A method of improved communication between a user and at least one of a plurality of diverse speech-recognizing data processing systems, utilizing a wireless transmitting device including a processor and memory, said method comprising the steps of:
storing, within said memory of said wireless transmitting device, voice characteristics of said user, said voice characteristics including prosody curves;
activating said wireless transmitting device and a speech recognition system within said at least one of a plurality of diverse, speech-recognizing data processing systems in response to an input from said user;
transmitting said voice characteristics from said memory to said speech recognition system in response to said activating step; and
facilitating communication between said user and said at least one of a plurality of diverse, speech-recognizing data processing systems through said speech recognition system utilizing a spoken utterance of said user and said voice characteristics.

5,704,010

ARRANGEMENT FOR RULE DECODING AND EVALUATION FOR A HIGH-RESOLUTION FUZZY INFERENCE PROCESSOR

Thomas Künemund, München, and Klaus Hentschel, Landshut, both of Germany, assignors to Siemens Aktiengesellschaft, Munich, Germany

PCT No. PCT/DE94/01061, § 371 Date Mar. 19, 1996, § 102(e) Date Mar. 19, 1996, PCT Pub. No. WO95/08797, PCT Pub. Date Mar. 30, 1995

PCT Filed Sep. 14, 1994, Ser. No. 617,909

Claims priority, application Germany, Sep. 20, 1993, 43 31 897.5

Int. Cl.⁶ G06G *7/00*

U.S. Cl. 395—3 **4 Claims**

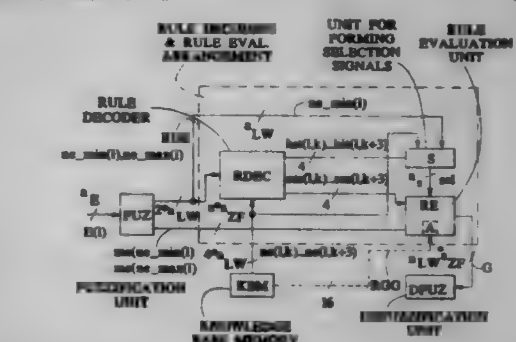

1. In a fuzzy inference processor having a fuzzification unit which, for each input variable, emits a minimum linguistic value number and a maximum linguistic value number and values of the membership functions of linguistic values that are in a closed interval between said minimum and maximum linguistic value numbers, a knowledge base memory which emits numbers for linguistic values of each input variable prescribed in a plurality of rules stored in said knowledge base memory, and a defuzzification unit that conducts defuzzification dependent on weighting factors applied to a linguistic value of an output variable, the improvement comprising:
a rule decoder supplied with said minimum and maximum linguistic value numbers, a selection signal former supplied with said minimum and maximum linguistic value numbers, and a rule evaluation unit which emits said weighting factors;
said knowledge base memory comprising means for emitting, for each input variable, a linguistic value for said input variable prescribed by said rules;
said rule decoder comprising means for generating a hit signal indicating whether, and if so which of, said rules are fulfilled by said input variable and, if necessary, a mask signal indicating that said input variable does not occur in any of said rules, said hit signal being supplied to said selection signal former and said mask signal being supplied to said rule evaluation unit;
said selection signal former comprising means for forming a selection signal dependent on said hit signal, said minimum and maximum linguistic value numbers, and said rule word and for emitting said selection signal to said rule evaluation unit;
said rule evaluation unit comprising a plurality of first hold elements, clocked by a first clock signal and respectively supplied with said values of said membership functions from said fuzzification unit, an allocation unit, a plurality of two-input OR gates, a plurality of minimum circuits, a plurality of second hold elements clocked by a second clock signal, a plurality of drivers, a counter, a read/write memory addressable by said counter, and a multiplexer, the pluralities of first

hold elements, OR gates, minimum circuits, second hold elements and drivers being equal, said plurality of first hold elements comprising, in combination, means for buffering said values of membership functions, one value per first holding element, and for transferring said values of said membership functions to said allocation unit upon said first clock signal, said allocation unit comprising means for allocating said values of said membership functions to one input of a selected one of said OR gates dependent on said selection signal, the other input of each OR gate being supplied with said mask signal, each minimum circuit having a first input connected to an output of one of said OR gates and a second input connected to an output of one of said second holding elements and comprising means for forming a running minimum from said first and second inputs and for supplying said running minimum to one of said drivers, each driver having an output connected to said read/write memory for storage of said running minima therein at respective addresses set by said counter, and also connected to said multiplexer and to one of said second holding elements, said plurality of second holding elements comprising, in combination, means for reading out running minima for a preceding clock cycle of said second clock signal from said read/write memory, one running minima per second holding element and for transferring said minima from said preceding clock cycle respectively back to said second inputs of the respective minimum circuits, and said multiplexer comprising means for controlled individual emission of said outputs of said drivers as current weighting factors;

means for emitting, to said rule evaluation unit, said linguistic values of said output variables; and

said rule evaluation unit further comprising means for aggregating said current weighting factors, for supply to said defuzzification unit, by linguistically ORing current weighting factors for rules having a same linguistic value as said output variable.

5,704,011
METHOD AND APPARATUS FOR PROVIDING MULTIVARIABLE NONLINEAR CONTROL
Peter D. Hansen, Wellesley Hills, and Paul C. Badavas, Southboro, both of Mass., assignors to The Foxboro Company, Foxboro, Mass.
Filed Nov. 1, 1994, Ser. No. 333,095
Int. Cl.⁶ G05B *13/04;13/00*
U.S. Cl. 395—22 **37 Claims**

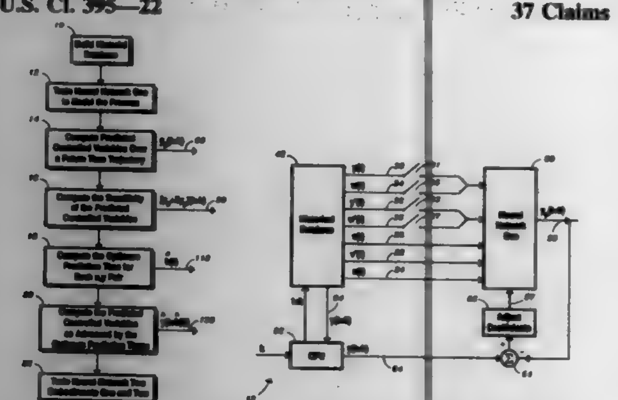

1. A system for providing an apparatus for use in controlling a process at a desired setpoint level, the process having process inputs and outputs, said system comprising:

(a) a data base of training patterns representing historical values of the process inputs and process outputs;
(b) a set of future time steps defining a future time horizon;
(c) a prediction model constructed with the training patterns contained in said data base, for predicting the process outputs over said future time horizon;
(d) a sensitivity processor utilizing said prediction model for determining the effect in the process outputs as a result of changes made to the historical values of the process inputs, said sensitivity processor producing predicted process outputs;
(e) a first processing element for computing a prediction time where a greatest value in the predicted process outputs occurs, the prediction time being an optimum prediction time;
(f) a second processing element for computing the predicted process output as advanced by the optimum prediction time;
(g) said apparatus comprising:
 (i) an input means for receiving input variables for operating said apparatus, the input variables comprising the historical values of the process inputs and outputs from said data base, optimum prediction times, and the predicted process outputs as advanced by the optimum prediction times;
 (ii) an output means for generating output variables for use in controlling the process in a preferred manner; and
 (iii) a processing means for mapping said input means to said output means, said processing means comprising a function for performing said mapping, said function determining an optimum prediction time, and a predicted process output for performing said mapping, the optimum prediction time representing an effective response time of the process to a change in a desired setpoint level and the predicted process output representing a process output as advanced by the optimum prediction time;
(h) a training system for training said apparatus in accordance with a training algorithm; and
(i) a third processing element for configuring said apparatus to receive all of said input variables and for operating said training system to train said apparatus with all of said input variables thereby producing output variables for use in controlling the process.

5,704,012
ADAPTIVE RESOURCE ALLOCATION USING NEURAL NETWORKS
Joseph Phillip Bigus, Rochester, Minn., assignor to International Business Machines Corporation, Armonk, N.Y.
Division of Ser. No. 134,953, Oct. 8, 1993, abandoned. This application May 31, 1995, Ser. No. 454,977
Int. Cl.⁶ G06F *1/00;15/18*
U.S. Cl. 395—22 **1 Claim**

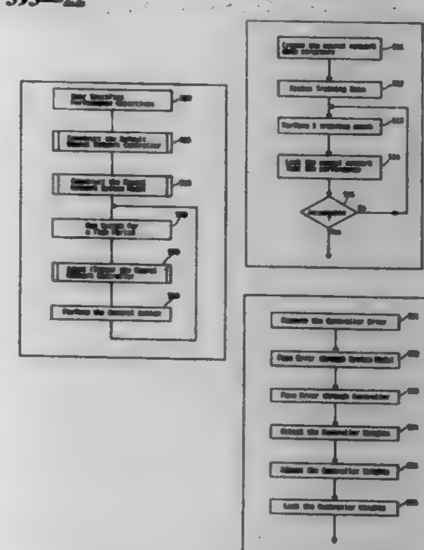

1. A method for controlling the response of a computer system to a workload and configuration, comprising the steps of:

gathering performance data for jobs in a plurality of job classes from said computer system, said performance data including workload data and configuration data for a plurality of time intervals, and further including computer system response data for said plurality of intervals, wherein the jobs in the plurality of job classes require different amounts of computer system resources;

constructing a neural network, said neural network having a set of inputs corresponding to the workload and configuration of said computer system, and having at least one output corresponding to response of said computer system;

training said neural network with said performance data gathered from said computer system to produce a trained neural network model of said computer system;

determining the response of said computer system from the output of said trained neural network; and

allocating the resources in said computer system among the plurality of job classes based on said response from said determining step and based on performance objectives for each job class specified by a user of said computer system.

5,704,013
MAP DETERMINATION METHOD AND APPARATUS
Masao Watari, Ibaragi; Kazuo Ishii, Kanagawa; Yasuhiko Kato, Kanagawa; Hiroaki Ogawa, Kanagawa; Masanori Omote, Kanagawa; Kazuo Watanabe, and Katsuki Minamino, both of Tokyo, all of Japan, assignors to Sony Corporation, Tokyo, Japan
Filed Dec. 28, 1994, Ser. No. 365,493
Int. Cl.⁶ G06F *15/18*
U.S. Cl. 395—23 **33 Claims**

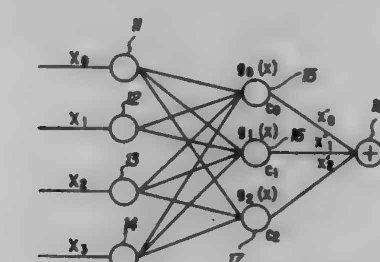

1. In a data processing system which generates output vectors, representing output data, of a predetermined number of dimensions with respect to input vectors, representing input data, of a prescribed number of dimensions, a map determination method for building a map F from N-dimensional weighted vector space Ω_N to M-dimensional weighted vector space Ω_M comprising:

a first step of computing in a processor L complete component functions $g_{lm}(X)$ determined from the distribution of samples grouped into Q categories in the N-dimensional weighted vector space Ω_N;

a second step of computing in a processor the function $f_m(X)$ for the mth component of the map F as the linear sum of the function $g_{lm}(X)$ and the Lm coefficients c_{lm};

a third step of computing in a processor a prescribed evaluation function J based on Q teaching vectors $(t_{q0}, t_{q1}, t_{q2}, \ldots t_{q(m-1)})$ relative to the Q categories over M-dimensional weighted vector space Ω_M, and computing the coefficient c_{lm} which makes the evaluation function J a minimum; and

a fourth step of storing the coefficient c_{lm} obtained in the third step in a digital memory.

5,704,014
VOLTAGE-CURRENT CONVERSION CIRCUIT EMPLOYING MOS TRANSISTOR CELLS AS SYNAPSES OF NEURAL NETWORK
Giulio Marotta, Rieti, and Eros Pasero, Turin, both of Italy, assignors to Texas Instruments Incorporated, Dallas, Tex.
Filed Jan. 30, 1992, Ser. No. 828,063
Claims priority, application Italy, Jan. 31, 1991, RM.91-A/000075
Int. Cl.⁶ H03K *19/0948;* **G06F** *15/18*
U.S. Cl. 395—24 **3 Claims**

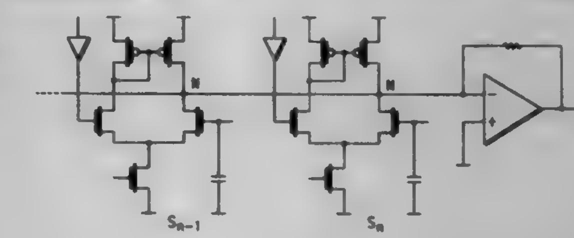

1. An integrated circuit in the form of cells of MOS transistors for converting a voltage into a current in forming synapses of a neural network, said integrated circuit comprising:

a plurality of individual MOS transistor cells connected in series to form a set of synapses of a neural nucleus, each of said MOS transistor cells including
 a first MOS transistor serving as a current generator,
 first and second parallel branches connected at one end at a first node to said first MOS transistor,
 second and third MOS transistors respectively disposed in said first and second branches and connected together in a push-pull configuration,
 an input voltage terminal connected to the gate of said second MOS transistor in said first branch,
 a weighting voltage terminal connected to the gate of said third MOS transistor in said second branch,
 fourth and fifth MOS transistors respectively disposed in said first and second branches and serially connected to said second MOS transistor and said third MOS transistor respectively, said fourth and fifth MOS transistors having their gates connected together,
 said fourth MOS transistor having its gate connected to a second node disposed in the connection between said fourth MOS transistor and said second MOS transistor such that said fourth MOS transistor is connected as a diode,
 a capacitor connected between the gate of said third MOS transistor included in said second branch and said weighting voltage terminal for storing the voltage for weighting the synapse, and
 a third node connected between said third MOS transistor and said fifth MOS transistor included in said second branch for drawing output current and defining the output node for the respective MOS transistor cell;

the output nodes of each of said plurality of MOS transistor cells being directly connected to each other in forming the set of synapses of a neural nucleus; and

a differential amplifier having first and second inputs, the first input of said differential amplifier being connected to the output from said output nodes of said plurality of MOS transistor cells and the second input of said differential amplifier being connected to ground;

said differential amplifier having an output providing a current as the algebraic sum of the respective currents provided by each of the plurality of synapses as defined by the respective MOS transistor cells.

5,704,015

OPTICAL OPERATION ELEMENT, OPTICAL DATA PROCESSING CIRCUIT AND PHOTOELECTRIC OPERATION ELEMENT

Shuji Ono, Kanagawa-ken, Japan, assignor to Fuji Photo Film Co., Ltd., Kanagawa, Japan

Filed Oct. 20, 1993, Ser. No. 138,120

Claims priority, application Japan, Oct. 20, 1992, 4-281597; Oct. 20, 1992, 4-281599

Int. Cl.[6] G06E *3/00*

U.S. Cl. 395—25 **14 Claims**

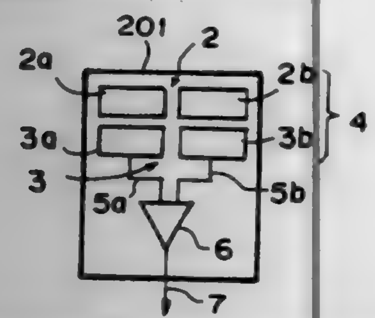

11. A photoelectric operation element layer comprising:
a plurality of photoelectric operation elements, each photoelectric operation element having
(a) a light receiving separation element including a pair of light receiving separation elements, arranged adjacently to each other, which simultaneously receive and optically filter an input information beam containing positive and negative information and separate said input information beam into separated electrical information signals which are independent of each other; and
(b) an operation element which outputs an electric signal corresponding to an operation result obtained by computing said separated electrical information signals, which are arranged one-dimensionally or two-dimensionally.

5,704,016

TEMPORAL LEARNING NEURAL NETWORK

Yukifumi Shigematsu, and Gen Matsumoto, both of Tsukuba, Japan, assignors to Agency of Industrial Science & Technology, Ministry of International Trade & Industry, Tokyo, Japan

Filed Mar. 17, 1995, Ser. No. 405,963

Claims priority, application Japan, Mar. 13, 1994, 6-078003

Int. Cl.[6] G06F *15/18*

U.S. Cl. 395—27 **4 Claims**

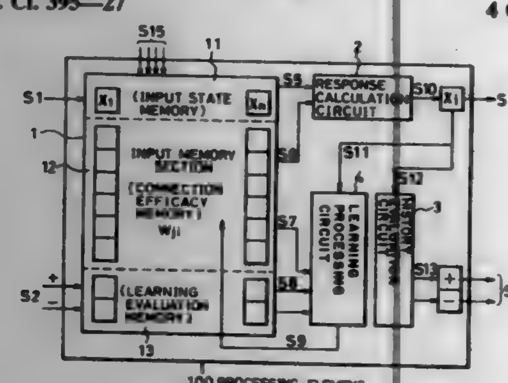

1. A temporal learning neural network for implementing input temporal associative learning, the neural network comprising:
a substrate,
a plurality of temporal learning neural processing elements integrated on said substrate, and
an input/output control section including input terminals and output terminals;
each of said processing elements comprising:
learning means, and
calculation means comprising:
an input memory section with inputting means for inputting a plurality of signal pulses, and means for storing the signal pulses input from said inputting means, and
a response calculation circuit which calculates a sum of (a) a total summation value of a product of (i) input values to said input memory section and (ii) corresponding input terminal connection efficacies, and (b) an internal potential remaining in the processing element at a current time, which is obtained by decaying the internal potential of the processing element at a preceding time, the sum forming an accumulated value, said response calculation circuit including comparing means for comparing the accumulated value with a predetermined threshold value and, (i) when the accumulated value exceeds the predetermined threshold value, outputting an output 1 signal, and storing, as the internal potential for the processing element at a subsequent time, a value obtained by deducting a constant from the accumulated value, and (ii) when the accumulated value does not exceed the predetermined threshold value, outputting an output 0 signal and storing the accumulated value as the internal potential of the processing element of the subsequent time, said learning means comprising:
a history evaluation circuit for determining an input history evaluation value, and
a learning processing circuit for generating new connection efficacies in a processing element wherein said calculation circuit has output an output 1 signal, by receiving an input history evaluation value from said history evaluation circuit, the input history evaluation value (i) strengthening the connection efficacies when the evaluation value is positive, (ii) weakening the connection efficacies when the evaluation value is negative and (iii) leaving the connection efficacies unchanged when the evaluation value is zero, wherein said history evaluation circuit includes:
means for using an input history value of the processing element of the preceding time for the input history value of the processing element of a current time, which is obtained by accumulating the input signals with decay,
means for comparing the input history value with an enhancement learning threshold value and a decreased learning threshold value, generating the input history evaluation value whereby a changing direction for the connection efficacies is (i) positive when the obtained input history value is equal to or higher than the enhancement learning threshold value, (ii) negative when the obtained input history value is lower than the enhancement learning threshold value and is equal to or higher than the decreased threshold value, or (iii) zero when the obtained input history value is lower than the decreased threshold value, and
means for distributing the input history evaluation value to the input memory section of each of the processing elements, and
wherein said input/output control section includes
means for receiving at said input terminals (i) the output 1 and output 0 signals output from said response calculation circuit and (ii) the input history evaluation value from said history evaluation circuit, and
means for sending, from said output terminals, the signals input from said response calculation circuit and from said history evaluation circuit, to said input memory section of each of said plurality of processing elements.

5,704,017

COLLABORATIVE FILTERING UTILIZING A BELIEF NETWORK

David E. Heckerman, Bellevue; John S. Breese, Mercer Island; Eric Horvitz, Kirkland, all of Wash., and David Maxwell Chickering, Los Angeles, Calif., assignors to Microsoft Corporation, Redmond, Wash.

Filed Feb. 16, 1996, Ser. No. 602,238

Int. Cl.[6] G06F *17/00*

U.S. Cl. 395—61 **43 Claims**

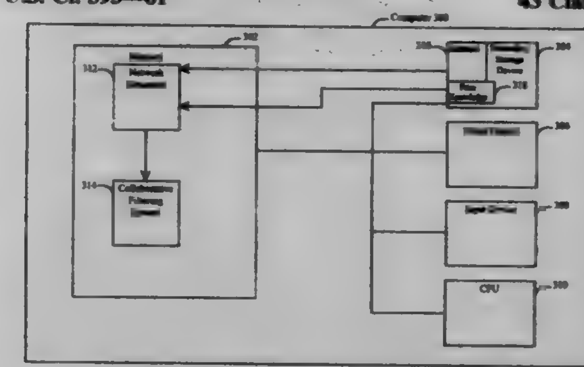

16. A computer-readable media that causes a collaborative filtering system in a computer system to predict a desired preference of a user, by performing the steps of:
receiving a belief network into the collaborative filtering system, the belief network containing a hidden attribute node and preference nodes, the hidden attribute node reflecting an unobserved attribute of the user that causally influence the desired preference, the preference nodes reflecting available preferences of the user, each preference node having a value and having a probability indicating a likelihood that the available preference is the desired preference of the user given the values of the preference nodes;
receiving data containing values for the preference nodes;
receiving a range of a number of states for the hidden attribute node;
for each number of states for the hidden attribute node,
generating a belief network having the preference nodes and the hidden attribute node, wherein the hidden attribute node has the number of states; and
scoring the generated belief network for goodness in predicting the desired preference based on the data;
selecting a generated belief network having a best goodness in predicting the desired preference based on the data;
receiving a request to determine an available preference having a greatest likelihood of being the desired preference, the request containing a value for at least one of the preference nodes;
determining an available preference having the greatest likelihood of being the desired preference by accessing the generated belief network having the best goodness and evaluating the probabilities of the preference nodes given the value for the at least one preference node; and
indicating the available preference having the greatest likelihood of being the desired preference to the user.

5,704,018

GENERATING IMPROVED BELIEF NETWORKS

David E. Heckerman, Bellevue, Wash.; Dan Geiger, Tivon, Israel, and David M. Chickering, Los Angeles, Calif., assignors to Microsoft Corporation, Redmond, Wash.

Filed May 9, 1994, Ser. No. 240,019

Int. Cl.[6] G06F *15/18*

U.S. Cl. 395—75 **14 Claims**

7. A computer system for assisting in making a decision comprising:
means for providing expert knowledge containing factors that causally influence the decision, an indication of relationships

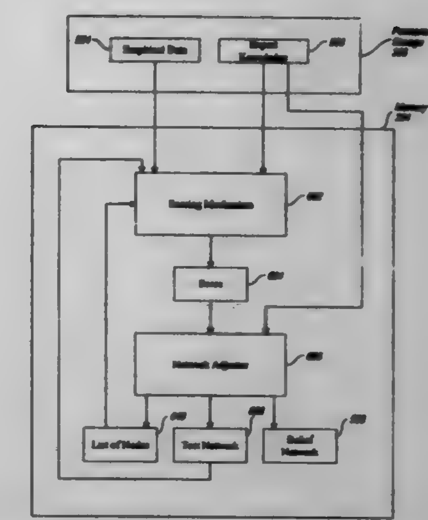

between the factors, and an indication of a strength of the relationships between the factors;
means for providing empirical data, wherein empirical data contains cases of observations of the factors; and
a belief network generator for generating a belief network utilizing the expert knowledge and for modifying the generated belief network utilizing the empirical data.

5,704,019

RESOLUTION CONVERSION METHOD AND APPARATUS

Yuji Akiyama; Kazuhiko Morimura, both of Yokohama; Masashi Matsumoto, Kawasaki; Sadayuki Sugama, Tsukuba; Masashi Kamada, Kawasaki, and Takayuki Ninomiya, Ichikawa, all of Japan, assignors to Canon Kabushiki Kaisha, Tokyo, Japan

Filed May 18, 1994, Ser. No. 245,634

Claims priority, application Japan, May 20, 1993, 5-118529

Int. Cl.[6] H04N *1/40;1/393;* G06K *9/42;9/44*

U.S. Cl. 395—101 **25 Claims**

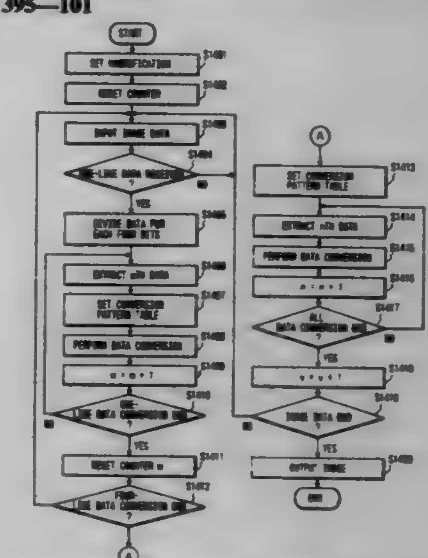

1. A data processing method for converting data of a resolution X into data of a resolution Y higher than said resolution X, comprising:
a first dividing step of dividing the data of the resolution X every A bits in a first direction;
a first converting step of converting the divided A-bit data into B-bit data of a bit number B by using a first conversion pattern table;

a second dividing step of dividing the data which was obtained by repeating the conversion by said first converting step by a number of times equal to a number of lines in a second direction, every A bits;
a second converting step of converting the divided A-bit data into the B-bit data of the bit number B by using a second conversion pattern table; and
a reducing step of reducing the data that was converted by said second converting step.

5,704,020
PAGE PRINTER RESOLUTION CONVERTING METHOD, AND VARIABLE-LENGTH REVERSIBLE COMPRESSION PROCESS
Yoshiaki Hanyu, Souka, and Mutsuo Shimomae, Yokosuka, both of Japan, assignors to Ricoh Company, Ltd., Tokyo, Japan
Filed Jan. 11, 1996, Ser. No. 586,477
Claims priority, application Japan, Mar. 8, 1995, 7-048754
Int. Cl.^{6} G06K *15/00*
U.S. Cl. 395—102 **1 Claim**

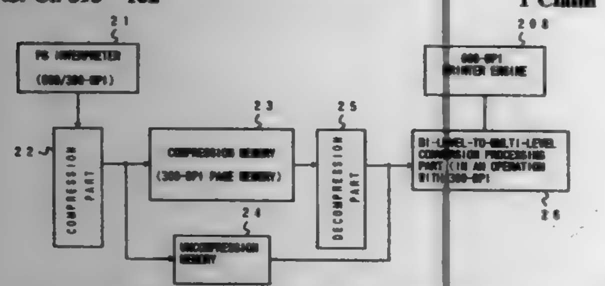

1. A page printer printing document data comprising:
first rasterizing means for rasterizing said document data with a first resolution;
data compression means for compressing each of blocks which form first rasterized data from said first rasterizing means to produce a compression code, and for storing the compression code in a compression memory;
data decompression means for decompressing said compression code stored in the compression memory, and for transmitting decompressed data to a printer engine having the first resolution;
second rasterizing means for rasterizing said document data again with a second resolution less than said first resolution when said compression code exceeds a given size; and
resolution converting means for converting second rasterized data from said second rasterizing means to conversion data with said first resolution, and for transmitting the conversion data to said printer engine having the first resolution.

5,704,021
ADAPTIVE COLOR RENDERING BY AN INKJET PRINTER BASED ON OBJECT TYPE
Thomas G. Smith, San Diego; Kirt Alan Winter, and Frank Anthony Kurucz, both of Escondido, all of Calif., assignors to Hewlett-Packard Company, Palo Alto, Calif.
Filed Jan. 27, 1994, Ser. No. 189,006
Int. Cl.^{6} G06K *15/00;* **H04N** *1/46;* **G03F** *3/08*
U.S. Cl. 395—109 **19 Claims**

1. A method of color inkjet printing for use in printing color objects of any of a plurality of different object types; said method comprising the following steps:
providing means for identification and recognition of a plurality of different types of color objects;
providing means for using a plurality of different color-rendering options in printing color objects;
automatically providing default settings for at least one of said color-rendering options;

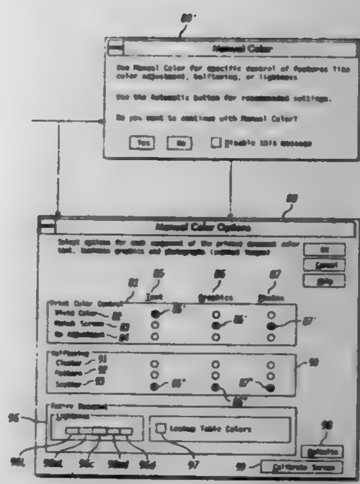

identifying the type of at least one color object in a document to be printed;
selecting a preferred color-rendering option to be used for objects of said identified type; and
using a printer system to cause a color inkjet printer to use the preferred color-rendering option of said selecting step to print said at least one color object, of said identified type, in said document.

5,704,022
PRINTER WITH HIGH BANDWIDTH COMPRESSION ARCHITECTURE
Bryan Leslie Ethington, Lexington; John Francis Gostomski, Winchester; Jeffrey Alan Minnick, and Christopher Mark Songer, both of Lexington, all of Ky., assignors to Lexmark International, Inc., Lexington, Ky.
Filed May 2, 1996, Ser. No. 641,872
Int. Cl.^{6} G06K *15/00*
U.S. Cl. 395—115 **12 Claims**

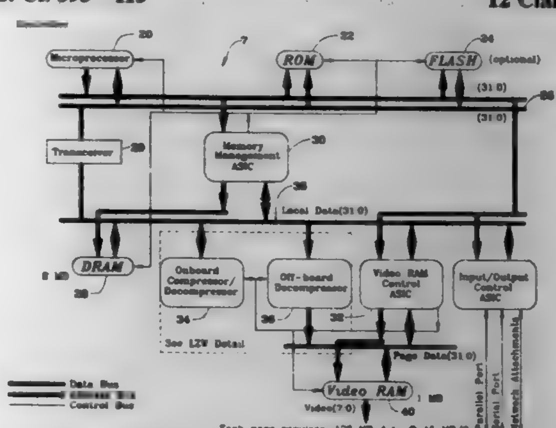

1. A control system for a printer which requires at least 8 bit level information for each pel comprising a renderer to determine pel information including said level information from printer control information in blocks of predetermined size, each block describing part of a page, data processing means to determine if said level information is at one level for each block, data processing means responsive to said determination of one level to store in a first memory said blocks of one level in one bit for each pel form, means to store level data for each said block stored in one bit for each pel, a second memory to receive bit data and deliver that bit data to said printer for printing, means to store data for printing in said second memory corresponding to data in said first memory with said level information restored for each bit as said at least 8 bits for each pel, said level information being obtained from said level data stored for each block when the corresponding block was stored in one bit for each pel form.

5,704,023
METHOD FOR INTERFACING ELECTRICAL SIGNALS TRANSMITTED BETWEEN AN ENGINE CONTROLLER AND A VIDEO CONTROLLER
Gyung-Yeol Kim, Seongnam, Rep. of Korea, assignor to Samsung Electronics Co., Ltd., Kyungki-do, Rep. of Korea
Filed Nov. 7, 1995, Ser. No. 551,815
Claims priority, application Rep. of Korea, Nov. 9, 1994, 29368/1994
Int. Cl.^{6} G06F *15/00*
U.S. Cl. 395—114 **16 Claims**

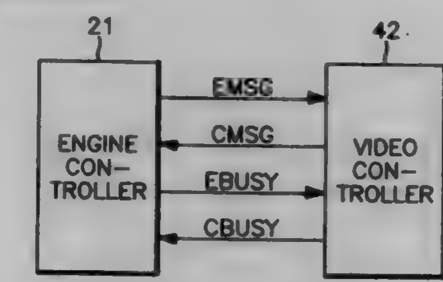

7. A method for interfacing electrical signals transmitted between an engine controller and a video controller connected through first and second transmission lines in an image forming apparatus, said method comprising the steps of:
transmitting a first signal from said engine controller to said video controller through said first transmission line after performing a warm up operation on said image forming apparatus, said first signal indicating that said engine controller is ready to enable performance of a printing operation;
transmitting a second signal from said video controller to said engine controller through said second transmission line in response to an input of printing data to said video controller from an external source, said second signal indicating commencement of said printing operation;
transmitting a third signal from said engine controller to said video controller through said first transmission line in response to receipt of said second signal by said engine controller, said third signal indicating that said engine controller is requesting page synchronization information; and
transmitting a fourth signal representative of said page synchronization information from said video controller to said engine controller through said second transmission line in response to receipt of said third signal by said video controller, said engine controller enabling performance of said printing operation in response to said fourth signal.

5,704,024
METHOD AND AN APPARATUS FOR GENERATING REFLECTION VECTORS WHICH CAN BE UNNORMALIZED AND FOR USING THESE REFLECTION VECTORS TO INDEX LOCATIONS ON AN ENVIRONMENT MAP
Douglas Voorhies, Menlo Park, and James Foran, Milpitas, both of Calif., assignors to Silicon Graphics, Inc., Mountain View, Calif.
Filed Jul. 20, 1995, Ser. No. 504,773
Int. Cl.^{6} G06T *15/50*
U.S. Cl. 395—126 **19 Claims**

1. A method for generating a reflection vector, said method comprising the steps of:
a) receiving an eye vector (E) and a normal vector (N) at least one of which is not normalized; and

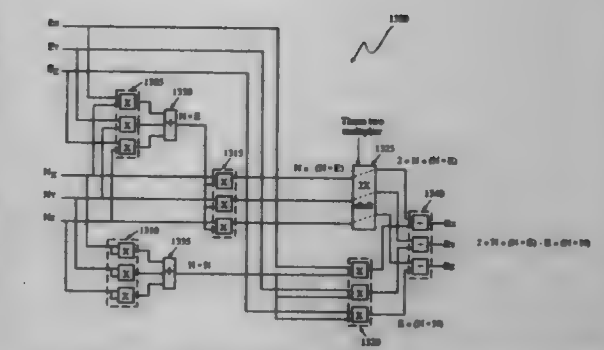

b) producing a reflection vector (R) without vector normalization.

5,704,025
COMPUTER GRAPHICS SYSTEM HAVING PER PIXEL DEPTH CUEING
Kyle R. Berry, Fort Collins, Colo., assignor to Hewlett-Packard Company, Palo Alto, Calif.
Filed Jun. 8, 1995, Ser. No. 488,641
Int. Cl.^{6} G06F *15/00*
U.S. Cl. 395—131 **15 Claims**

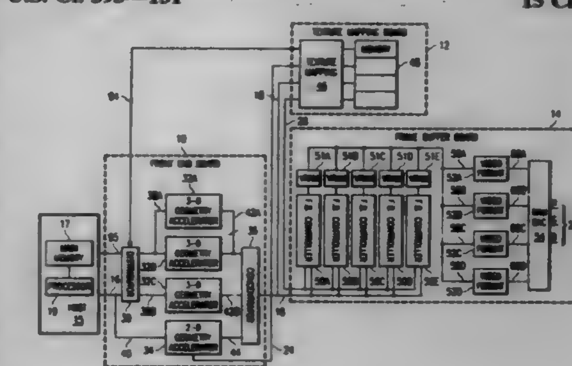

1. In a computer graphics system, apparatus for depth cueing colors, comprising:
a first circuit, responsive to a depth cue scale factor function and vertex parameters of a triangle to be displayed as a plurality of pixels, for determining a per vertex depth cue scale factor value for each vertex of the triangle;
a second circuit, responsive to the per vertex depth cue scale factor values and the vertex parameters of the triangle, for determining depth cue rendering parameters of the triangle;
a third circuit, responsive to the per vertex depth cue scale factor value for a selected vertex of the triangle and the depth cue rendering parameters, for determining a per pixel depth cue scale factor value for each of the pixels in the triangle;
a fourth circuit, responsive to the vertex parameters of the triangle, for determining per pixel color values for each of the pixels in the triangle; and
a fifth circuit, responsive to the per pixel depth cue scale factor value, the per pixel color values and a depth cue color, for determining per pixel depth cued color values for each of the pixels in the triangle.

5,704,026

METHOD AND APPARATUS FOR DETERMINING A GAMUT BOUNDARY AND A GAMUT DESCRIPTOR

Shijie J. Wan, Rochester, N.Y., assignor to Eastman Kodak Company, Rochester, N.Y.

Continuation of Ser. No. 68,887, May 28, 1993, abandoned. This application Jan. 13, 1997, Ser. No. 782,852

Int. Cl.⁶ G06T *15/50*

U.S. Cl. 395—131 **7 Claims**

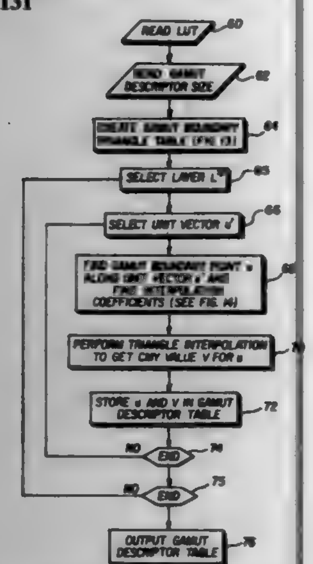

1. A method of creating and using a device gamut descriptor, comprising the steps of:

(a) selecting gamut boundary signals from a gamut in a predetermined regularly spaced pattern in a device independent color space; and

(b) storing the gamut boundary signals defining the gamut descriptor for use in determining whether a color signal is within the gamut, wherein step (a) comprises the steps of:

(1) dividing the gamut expressed in a device independent color space into parallel planes separated by a predetermined distance;

(2) selecting unit vectors in each plane separated by a predetermined angle; and

(3) determining the intersection point signal of each unit vector and the gamut boundary by;

(i) defining a convex polyhedral cone using points on the gamut boundary;

(ii) finding a polyhedral cone enclosing each unit vector;

(iii) determining the convex coefficients; and

(iv) determining the intersection point signal using the coefficients

(c) selecting a test point along the unit vector;

(d) comparing the test point to the intersection point with a result of the comparison indicating whether the test point is in the gamut; and

(e) identifying the colors falling outside the gamut descriptor to within the reproducible gamut of the device and processing these colors for display.

5,704,027

APPARATUS FOR GENERATING GRAPHIC COORDINATES FOR SCAN TYPE GRAPHIC DISPLAY

Jerry Hsu, Yun-Lin-Shan, Taiwan, assignor to United Microelectronics Corporation, Hsin-Chu, Taiwan

Filed Jul. 21, 1995, Ser. No. 505,577

Int. Cl.⁶ G06T *3/00*

U.S. Cl. 395—133 **2 Claims**

1. A coordinate conversion device suitable for use with a scan type display having a plurality of scan lines, each scan line having a plurality of pixels, said coordinate conversion device comprising:

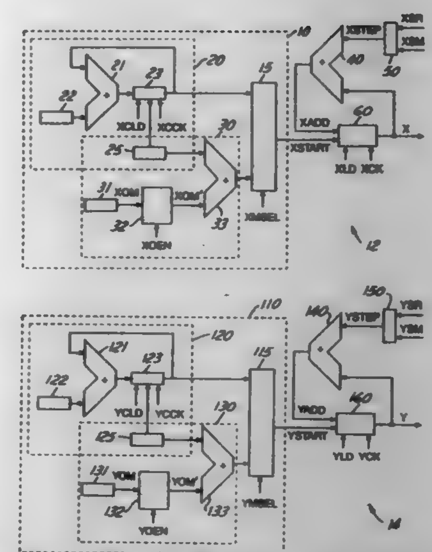

a horizontal position transformation circuit responsive to a screen starting point of each scan line for generating a horizontal graphics position on a per pixel basis; and

a vertical position transformation circuit responsive to said screen starting points for generating a vertical graphics position on a per pixel basis;

said horizontal position transformation circuit comprising:

a horizontal start position generator for generating a respective graphics horizontal start position corresponding to said starting points;

a horizontal step value generator for generating a graphics horizontal step value associated with each scan line;

a first adder having an output for adding, on a per pixel basis, said horizontal step value and said horizontal graphics position;

a horizontal position register responsive to said graphics horizontal start position and said output of said first adder for generating said horizontal graphics position; and

said vertical position transformation circuit comprising:

a vertical start position generator for generating a respective graphics vertical start position corresponding to said starting points;

a vertical step value generator for generating a graphics vertical step value associated with each scan line;

a second adder having an output for adding, on a per pixel basis, said vertical step value and said vertical graphics position; and

a vertical position register responsive to said graphics vertical start position and said output of said second adder for generating said vertical graphics position;

said horizontal start position generator including:

a first horizontal position generator responsive to said starting points for generating a respective first horizontal parameter according to an automatic horizontal accumulation step value;

a second horizontal position generator responsive to said starting points for generating a respective second horizontal parameter according to a horizontal offset from a first memory;

a first multiplexer for selecting, on a screen display basis according to a first horizontal selection control signal, one of said first and said second horizontal parameters to generate said graphics horizontal start position;

said vertical start position generator including:

a first vertical position generator for generating a first vertical parameter according to an automatic vertical accumulation step value;

a second vertical position generator for generating a second vertical parameter according to a vertical offset from a second memory; and

a second multiplexer for selecting, on a screen display basis according to a first vertical selection control signal, one of

said first and said second vertical parameters to generate said graphics vertical start position.

5,704,028

GRAPHICS SYSTEMS AND METHOD HAVING DATA FIELDS AND SHAPE PLACEMENT CONTROL

Scott Schanel, San Francisco, and Gerald R. Hogsett, II, San Carlos, both of Calif., assignors to Micrografx, Inc., Richardson, Tex.

Filed Dec. 21, 1994, Ser. No. 361,125

Int. Cl.⁶ G06F *15/00*

U.S. Cl. 395—140 **56 Claims**

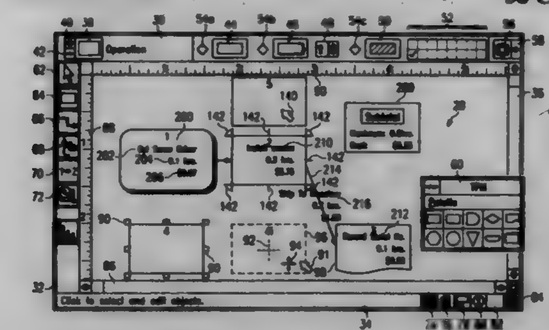

1. A computer graphics system for generating graphics charts on a computer display, the system comprising:

a computer-readable medium; and

a computer program encoded on the computer-readable medium, the computer program further comprising:

means for placing a plurality of shapes in a chart on the display,

means for maintaining positioning coordinates for each shape in the chart,

means responsive to a move command for moving one of the shapes with respect to the stationary shapes in the chart,

means for comparing the distance between each of the stationary shapes and the moving shape as the moving shape is moved in the chart, and

means for setting release coordinates for the moving shape with respect to at least one stationary shape when the moving shape is brought within a predetermined offset to a first distance from the at least one stationary shape.

5,704,029

SYSTEM AND METHOD FOR COMPLETING AN ELECTRONIC FORM

Gerald V. Wright, Jr., San Diego, Calif., assignor to Wright Strategies, Inc., La Jolla, Calif.

Filed May 23, 1994, Ser. No. 247,777

Int. Cl.⁶ G06F *17/30*

U.S. Cl. 395—149 **23 Claims**

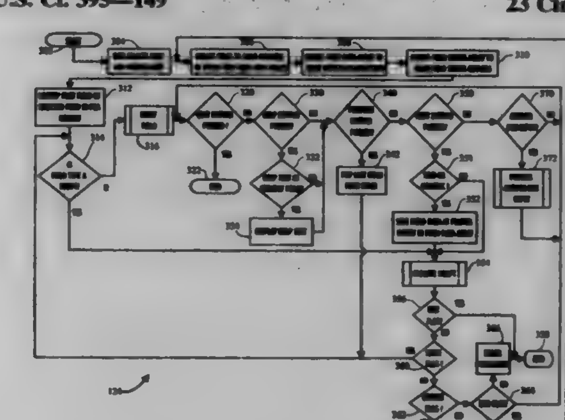

1. A system for completing an electronic form, comprising:

a portable unit including a processor, a graphics display, an input device mechanism and a memory;

an electronic form stored in the memory of the unit comprising a plurality of form descriptors that define displayable items, wherein each form descriptor includes a self-contained script program indicative of the next displayable item to be displayed, wherein each script program stores and retrieves data to and from the memory and wherein the order of display of the displayable items is defined by the script programs;

a forms engine to display a single displayable item on the graphics display described by one of the form descriptors, wherein the displayable item includes a sentence and a set of possible response entries, wherein the script program of the displayable item is interpreted by the forms engine, and wherein the one displayable item utilizes the entire display; and

wherein the input device mechanism accepts one or more of the responses selected by a user of the unit.

5,704,030

METHOD FOR COMPENSATING TIME IN TRANSMITTING UNIT AND TRANSMITTING SYSTEM

Tomoyuki Kanzaki, Kawasaki, Japan, assignor to Fujitsu Limited, Kanagawa, Japan

Filed Aug. 17, 1995, Ser. No. 516,109

Claims priority, application Japan, Aug. 18, 1994, 6-193463

Int. Cl.⁶ G06F *1/14*

U.S. Cl. 395—182.1 **12 Claims**

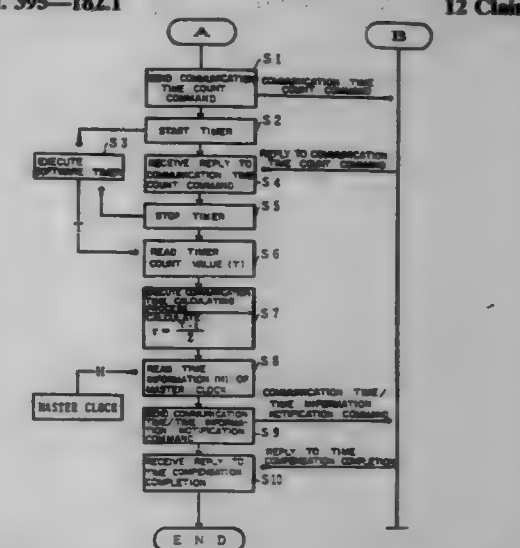

11. A time compensating method for a transmitting unit having a local CPU operated according to a master clock signal and a remote CPU operated according to a clock signal generated independently from the master clock signal, the time of the remote CPU being compensated according to time information from the local CPU, comprising the steps of:

sending a communication time count command to a remote CPU so as to count inter-CPU communication time;

calculating inter-CPU communication time necessary for communication between CPUs according to the time that is from when the local CPU sends the communication time count command until the local CPU receives a reply from the remote CPU, and a predetermined time that is from when the remote CPU receives the communication time count command until the remote CPU sends the reply; and

compensating the time counted by the remote CPU to be compensated according to the inter-CPU communication time and the time information from the local CPU.

5,704,031

METHOD OF PERFORMING SELF-DIAGNOSING HARDWARE, SOFTWARE AND FIRMWARE AT A CLIENT NODE IN A CLIENT/SERVER SYSTEM

Ichizou Mikami, Suita; Toshio Komasaka, Tokushima; Masahiro Niimi, Tokushima, and Takashi Miyamoto, Tokushima, all of Japan, assignors to Fujitsu Limited, Kawasaki, Japan

Filed Dec. 8, 1995, Ser. No. 569,945

Claims priority, application Japan, Mar. 30, 1995, 7-074118

Int. Cl.⁶ G06F *11/00*

U.S. Cl. 395—182.02 **3 Claims**

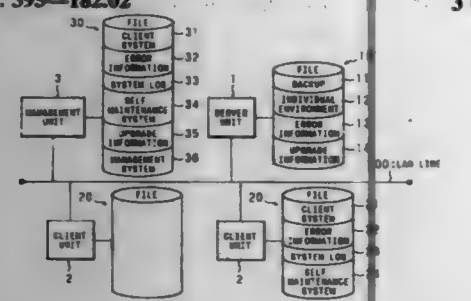

1. A client/server system in which at least one client unit whose software and firmware are installed in a hardware thereof, and at least one server unit having backup data for the software of said client unit are connected with each other, wherein

said client unit comprises:

hardware diagnosing means for diagnosing the hardware of said client unit;

system start diagnosing means for, when said hardware diagnosing means has determined that an abnormality has been caused, diagnosing whether the software of said client unit can be started or not, and for releasing said client unit from the system when the software cannot be started;

installation state diagnosing means for, when said system start diagnosing means has determined that the software can be started, diagnosing whether or not the software has been installed in said client unit;

operation environment change diagnosing means for, when said system start diagnosing means has determined that the software can be started, diagnosing whether or not the software and firmware installed in Said client unit have been deleted, created or modified;

generation monitoring means for, when said system start diagnosing means has determined that the software can be started, diagnosing whether or not the generation of the software installed in said client unit is identical to the generation of the software backed up by said server unit;

installing means for, when said installation state diagnosing means has determined that the software has not been installed, installing the software backed up by said server unit into said client unit;

self-repairing means for, when said operation environment change diagnosing means has determined that the software and firmware installed in said client unit have been deleted, created or modified, allowing said client unit to repair itself or for repairing said client unit by reinstalling from the server unit; and

operation environment updating means for, when said generation monitoring means has determined that the generation of the software and firmware installed in said client unit is not identical to the generation of the operation environment backed up by said server unit, updating operation environment of said client unit by itself.

5,704,032

METHOD FOR GROUP LEADER RECOVERY IN A DISTRIBUTED COMPUTING ENVIRONMENT

Peter Richard Badovinatz, Kingston; Tushar Deepak Chandra, Elmsford; Orvalle Theodore Kirby, Pleasant Valley, and John Arthur Pershing, Jr., Buchanan, all of N.Y., assignors to International Business Machines Corporation, Armonk, N.Y.

Filed Apr. 30, 1996, Ser. No. 640,219

Int. Cl.⁶ G06F *11/00*

U.S. Cl. 395—182.02 **10 Claims**

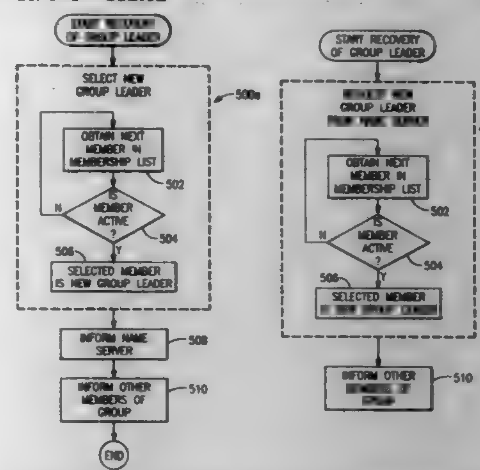

1. A method for recovering from a failed group leader of a group of processors of a distributed computing environment, said method comprising:

obtaining from a membership list ordered in sequence of joins of processors to said group of processors a next processor in said membership list; and

selecting said next processor as a new group leader of said group of processors.

5,704,033

APPARATUS AND METHOD FOR TESTING A PROGRAM MEMORY FOR A ONE-CHIP MICROCOMPUTER

Young Seung Park, Daeku-si, Rep. of Korea, assignor to LG Semicon Co., LTD., Chungcheongbuk-Do, Rep. of Korea

Filed Oct. 6, 1995, Ser. No. 540,169

Claims priority, application Rep. of Korea, Oct. 7, 1994, 25719-1994

Int. Cl.⁶ G06F *11/27;11/277*

U.S. Cl. 395—183.06 **16 Claims**

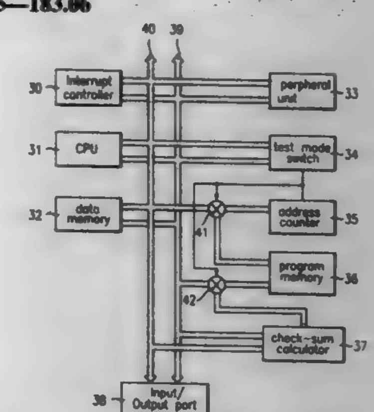

1. An apparatus for testing a program memory of a microcomputer, the microcomputer including a central processing unit, an interrupt controller for controlling an interrupt function, a data memory for storing information and data, a peripheral unit for performing input and output functions, an address bus line, a data bus line, and an input/output port for inputting and outputting data, the apparatus comprising:

a program memory for storing information therein;

address counting means for setting an address of said program memory and incrementing the set address by a predetermined value;

a first switch for selectively connecting said address counting means, said program memory, and the address bus line;

a second switch for selectively connecting said program memory, the data bus line, and check-sum calculator means;

the check-sum calculator means for calculating a check-sum value of data stored in the addresses of said program memory set and incremented by said address counting means;

mode setting means for setting a test mode and enabling said address counting means, said first switch, and said second switch when the test mode is set; and

test means for performing tests on other units of the microcomputer while said check-sum calculator means calculates the check-sum value.

5,704,034

METHOD AND CIRCUIT FOR INITIALIZING A DATA PROCESSING SYSTEM

Joseph C. Circello, Phoenix, Ariz., assignor to Motorola, Inc., Schaumburg, Ill.

Filed Aug. 30, 1995, Ser. No. 520,949

Int. Cl.⁶ G06F *11/00*

U.S. Cl. 395—183.14 **18 Claims**

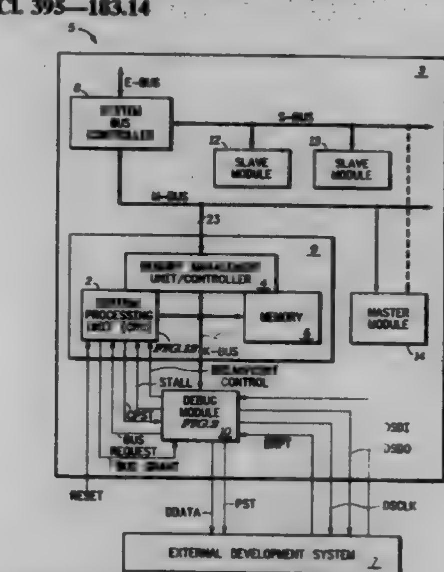

1. A data processor comprising:

a reset input, a reset control input, and a data input;

a circuit portion specifying a normal reset response;

a memory area for storing at least one data processor configuration parameter;

a central processor unit coupled to the reset input, the reset control input, the circuit portion, and the memory area, wherein, when an asserted reset signal is received by the reset input, the central processor trait enters a quiescent state;

if during the a quiescent state, an asserted reset control signal occurs the memory area is modified based on a data received by the data input;

if during the quiescent state the reset control signal is not asserted, the central processor continues execution based on the circuit portion.

5,704,035

COMPUTER METHOD/APPARATUS FOR PERFORMING A BASIC INPUT/OUTPUT SYSTEM (BIOS) POWER ON TEST (POST) THAT USES THREE DATA PATTERNS AND VARIABLE GRANULARITY

Mark S. Shipman, Portland, Oreg., assignor to Intel Corporation, Santa Clara, Calif.

Continuation of Ser. No. 283,206, Jul. 28, 1994, abandoned. This application Jul. 3, 1996, Ser. No. 675,423

Int. Cl.⁶ G06F *13/00*

U.S. Cl. 395—183.18 **9 Claims**

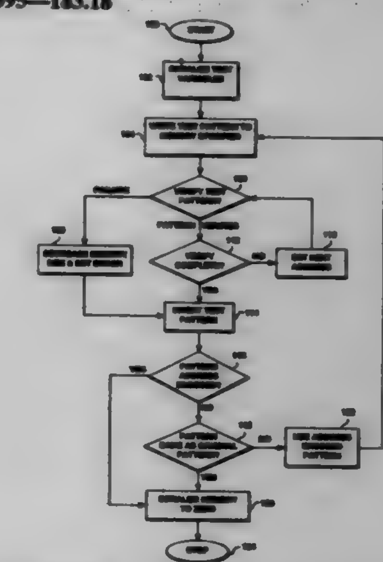

1. A method of testing a memory, comprising the steps of:

a. determining a memory test size representing an amount of the memory to test, a base address of the memory to begin testing, and a granularity corresponding to a variable testing resolution;

b. initializing an address offset;

c. writing a first data pattern to a portion of memory identified by the base address+address offset;

d. recomputing the address offset in accordance with the address offset and the granularity; and

e. repeating steps c–d until the address offset exceeds the memory test size.

5,704,036

SYSTEM AND METHOD FOR REPORTED TROUBLE ISOLATION

Curtis Brownmiller, Richardson; Mike Bencheck, Garland; Minh Tran, Plano; Robert Branton, Farmers Branch; Mark DeMoss, The Colony, and Steve Landon, Richardson, all of Tex., assignors to MCI Communications Corporation, Washington, D.C.

Filed Jun. 28, 1996, Ser. No. 672,812

Int. Cl.⁶ G06F *11/30*

U.S. Cl. 395—183.19 **19 Claims**

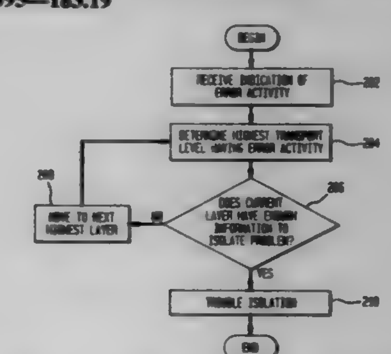

9. A method in a network management layer for isolating a problem in a circuit path contained in a network, the circuit path

including a plurality of network elements interconnected by a plurality of links having various transport levels, the method comprising the steps of:

(1) receiving a first report of error activity at a first signal transport level from a monitoring point associated with a network element in the circuit path;

(2) determining whether a second report of error activity has been received for a next highest signal transport level, wherein said first signal transport level is mapped into a second signal transport level;

(3) repeating said step (2) until a highest signal transport level reporting an indication of error activity is identified; and

(4) isolating the problem through analysis at said highest signal transport level.

5,704,037

CURSOR POSITIONING DEVICE FOR COMPUTER SYSTEM

Mei Yun Chen, Fl., 4, No. 2, Lane 42, Hou Kang St., Shih Lin District, Taipei, Taiwan

Filed Jun. 20, 1996, Ser. No. 667,897

Claims priority, application China, Mar. 20, 1996, 96103438.6

Int. Cl.⁶ G09G *5/00*

U.S. Cl. 345—184 **29 Claims**

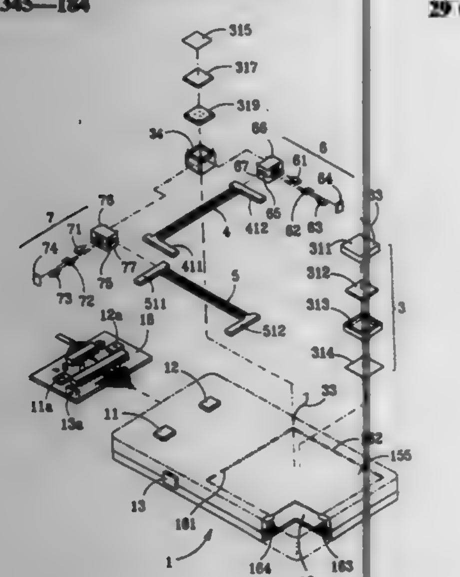

1. A cursor positioning device for control displacement and positioning of a cursor on a display of a computer device via a control circuit, said cursor positioning device comprising:

a lower housing;

an upper housing having a left switch push button, a right switch push button, and a middle switch push button, the upper housing being formed with a concave portion thereon as an effective positioning area;

a fasten wire;

a finger controllable member in a square form, composed of an upper case, a bottom case, a magnetic member, and a smooth member;

a X-axis movable photo encoder with printed patterns including a series of mask sections and transparent sections interleavingly, the encoder further having two guide extensions formed at two ends thereof;

a Y-axis movable photo encoder with printed patterns including a series of mask sections and transparent sections interleavingly, the encoder further having two guide extensions formed at two ends thereof;

a X-axis photo detector composed of an upper case, a lower case, a LED, a photo transistor, and a calibrating photo encoder attached to the surface of the photo transistor, the upper case being formed with a recess for providing a slide space for the X-axis movable photo encoder;

a Y-axis photo detector composed of an upper case, a lower case, a LED, a photo transistor, and a calibrating photo encoder attached to the surface of the photo transistor, the upper case being formed with a recess for providing a slide space for the Y-axis movable photo encoder;

an inside slidable member for fixing the X-axis photo detector, the Y-axis photo detector, the top surface of the slidable member being attached with a magnetic member and a smooth member; and

a control circuit board equipped with a left switch, a right switch, and a middle switch, a control circuit being arranged on the circuit board for processing signals generated by the photo detectors and transmitting the processed signals to the computer;

wherein the finger controllable member is operationally slidable on the concave portion of the upper housing and correspondingly moves the inside slidable member by means of magnetic force between the magnetic members associated on the finger controllable member and the inside slidable member, the movement of the inside slidable member capable of moving the

X-axis photo detector and the Y-axis photo detector along the

X-axis movable photo encoder and the Y-axis photo encoder respectively, with operation of the left switch push button, the right switch push button, and the middle switch push button, to input X-axis and Y-axis coordinate data of displacement and positioning of the finger controllable member via the control circuit to the computer, under operation mode that the displacement of the cursor on the display is proportional to that of the finger controllable member on the effective positioning area.

5,704,038

POWER-ON-RESET AND WATCHDOG CIRCUIT AND METHOD

Donald L. Mueller, Centerville, Ohio, and Benjamin L. Miciano, El Paso, Tex., assignors to ITT Automotive Electrical Systems, Inc., Auburn Hills, Mich.

Continuation of Ser. No. 316,246, Sep. 30, 1994, abandoned. This application Apr. 17, 1996, Ser. No. 632,328

Int. Cl.⁶ G06F *11/30*

U.S. Cl. 395—185.08 **23 Claims**

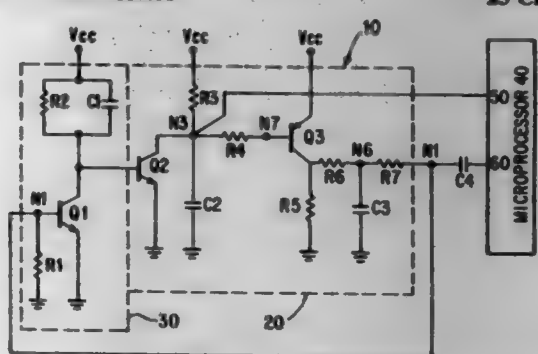

1. A watchdog circuit for use in conjunction with a microprocessor having a reset input terminal and a watchdog output terminal comprising:

a monitor circuit comprising passive elements, and no more than one transistor, which monitors the watchdog output terminal of the microprocessor and generates a monitor error signal in response to detecting a malfunction signal on the watchdog output terminal;

a reset circuit having an input terminal and an output terminal, wherein

(1) the output terminal is connected to the reset input terminal of the microprocessor

(2) said reset circuit generates a reset signal on the output terminal of the reset circuit in response to receipt of the monitor error signal on the input terminal of the reset circuit, and

(3) the input terminal of the reset circuit is different from the output terminal of the reset circuit.

5,704,039

MASK PROGRAMMABLE SECURITY SYSTEM FOR A DATA PROCESSOR AND METHOD THEREFOR

Oded Yishay; William P. LaViolette, and Daniel W. Pechonis, all of Austin, Tex., assignors to Motorola, Inc., Schaumburg, Ill.

Continuation of Ser. No. 279,378, Jul. 25, 1994, abandoned. This application Apr. 15, 1996, Ser. No. 632,179

Int. Cl.⁶ G06F *11/00*

U.S. Cl. 395—186 **2 Claims**

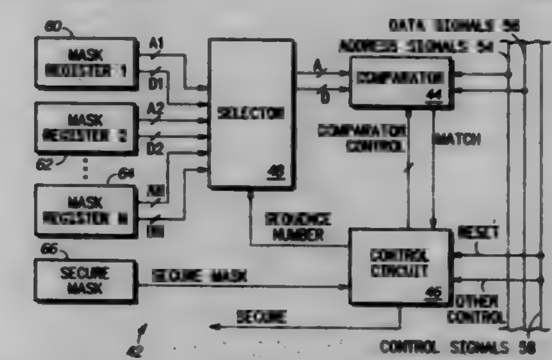

1. A method for providing security for a data processor, comprising the steps of:

i. receiving a plurality of signals using a bus interface circuit;

ii. retrieving a first stored address value from a first one of a plurality of mask registers;

iii. retrieving a first stored data value from the first one of the plurality of mask registers;

iv. comparing the first stored address value with a first address value of the plurality of signals;

v. comparing the first stored data value with a first data value of the plurality of signals;

vi. asserting a first match signal when the first stored address value is equal to the first address value of the plurality of signals and when the first stored data value is equal to the first data value of the plurality of signals;

vii. executing step ii. when one of the first stored address value is not equal to the first address value of the plurality of signals and the first stored data value is not equal to the first data value of the plurality of signals;

viii. negating a secure signal when the first match signal is asserted;

ix. retrieving a next stored address value from a next one of the plurality of mask registers;

x. retrieving a next stored data value from the next one of the plurality of mask registers;

xi. comparing the next stored address value with a next address value of the plurality of signals;

xii. comparing the next stored data value with a next data value of the plurality of signals;

xiii. asserting a next match signal when the next stored address value is equal to the next address value of the plurality of signals, when the next stored data value is equal to the next data value of the plurality of signals, and when a previous match signal was asserted;

xi. executing step ii. when one of the next stored address value is not equal to the next address value of the plurality of signals and the next stored data value is not equal to the next data value of the plurality of signals;

xv. executing steps x. through xv. for a predetermined number of repetitions; and

xvi. negating the secure signal when the first match signal is asserted and when each of a plurality of next match signals is asserted.

5,704,040

COMPUTER HAVING RESUME FUNCTION

Shizuka Gunji, Oome, Japan, assignor to Kabushiki Kaisha Toshiba, Kawasaki, Japan

Continuation of Ser. No. 616,783, Mar. 15, 1996, abandoned, which is a continuation of Ser. No. 369,700, Jan. 6, 1995, abandoned, which is a continuation of Ser. No. 247,408, May 23, 1994, Pat. No. 5,430,867, which is a continuation of Ser. No. 40,995, Mar. 31, 1993, abandoned, which is a continuation of Ser. No. 507,490, Apr. 11, 1990, Pat. No. 5,222,231. This application Dec. 20, 1996, Ser. No. 770,906

Claims priority, application Japan, Apr. 28, 1989, 1-110546

Int. Cl.⁶ G06F *12/14; 1/24*

U.S. Cl. 395—188.01 **44 Claims**

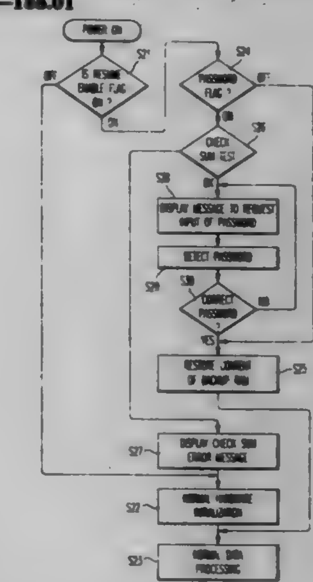

1. A data processing system having a resume function and a security managing function, comprising:

a switch for switching on and off power to said data processing system;

a switch detector, coupled to the switch, for detecting that the switch has switched on or off the power;

a memory, coupled to the switch, for storing contents of data processing performed by said data processing system in response to an indication of switching off of the power by said switch, and for holding identification data;

a data input device for inputting identification data;

discriminating means, coupled to the switch detector, the memory, and the data input device, the discriminating means being responsive to the switch detector, for discriminating whether identification data input from the data input device after the switch has switched on the power coincides with identification data held in the memory;

executing means for, in response to detection of a coincidence by the discriminating means, executing data processing, from processing executed immediately before the main power was switched off, in accordance with a storage content of the memory; and

means for inhibiting the data processing system from executing data processing from the processing executed immediately before the power was switched off, to protect contents of the data processing from an unauthorized person, in response to detection of a non-coincidence by the discriminating means.

5,704,041

OBJECT INDEPENDENT SCOPING IN AN OPEN SYSTEM INTERCONNECTION SYSTEM

Wade C. Allen, Durham; Jeremy Philip Goodwin, Raleigh, both of N.C.; Robert Louis Nielsen, Zumikon, Switzerland; Paul Joseph Reder, Durham, and Douglas Toltzman, Hubert, both of N.C., assignors to International Business Machines Corporation, Armonk, N.Y.

Filed Sep. 21, 1994, Ser. No. 310,134

Int. Cl.⁶ G06F *13/42*

U.S. Cl. 395—200.15 **7 Claims**

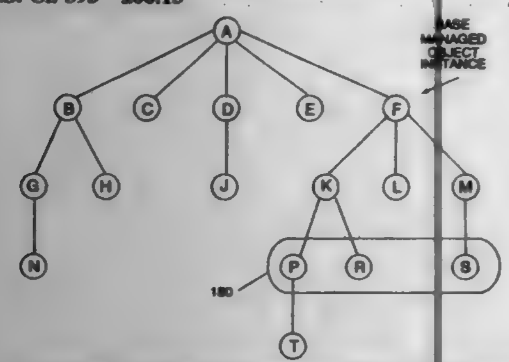

1. A method, resident in an agent platform, for scoping managed object instances (MOIs) to receive a message from a manager application, said message

specifying a portion of a tree containing the MOIs to receive the message, the method comprising the steps of:

maintaining, at the agent platform, said tree in a current and an accurate state;

receiving at the agent platform the message from the manager:

from the message determining at the agent platform the specified tree portion;

recursing by the agent platform through the tree within and adjacent to the tree portion to find which MOIs should receive the message;

generating, at the agent platform, a scope list comprising the MOIs which should receive the message;

sending a message from the agent platform to the MOIs which should receive the message as determined from said generating step, thereby permitting the MOIs to process said message without having to know of the presence or absence of other MOIs;

wherein the message from the manager is delete, and MOIs are only added to the scope list if they are deletable.

5,704,042

ACCELERATED REPLICATION OF MULTIPLE COMPUTER DISPLAYS

John Hester, Oak Lawn, and Krista S. Schwartz, Batavia, both of Ill., assignors to NCR Corporation, Dayton, Ohio

Continuation-in-part of Ser. No. 35,092, Mar. 19, 1993, Pat. No. 5,649,104. This application Sep. 28, 1993, Ser. No. 128,012

Int. Cl.⁶ G06F *13/38*

U.S. Cl. 395—200.34 **8 Claims**

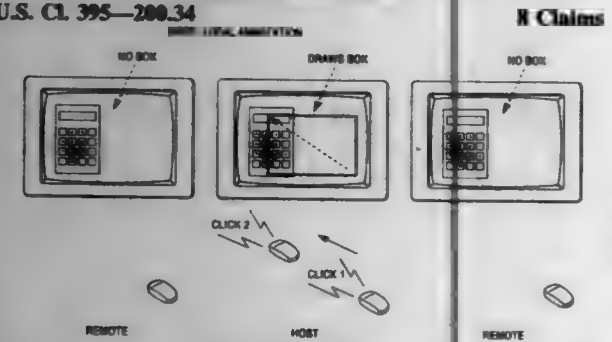

1. In a system wherein a GUI runs on a host computer and generates graphic images by issuing GDI calls which make reference to device contexts, the improvement comprising:

a) maintaining similar device contexts in remote computers and

b) maintaining substantially identical first program means on each computer, which

i) allows a single application program to selectively run on any of the computers, and no other computer, which generates a display on the selected computers,

ii) replicates the display on all other computers,

iii) allows a user of each computer to make annotations, containing graphical images, on the replicated display of each respective computer,

iv) allows each respective user to selectively

A) cause the first program means to copy the annotations made by the user to replicated displays of other computers, or

B) cause the first program means to refrain from copying the annotations made by the user.

5,704,043

Patent Not Issued For This Number

5,704,044

COMPUTERIZED HEALTHCARE ACCOUNTS RECEIVABLE PURCHASING, COLLECTIONS, SECURITIZATION AND MANAGEMENT SYSTEM

Fred B. Tarter, Armonk; Jeffrey M. Greene; Thomas J. De Fazio, both of New York, all of N.Y.; Jan Peck, Glendale; L. Stephen Wylie, Scottsdale, both of Ariz.; Mark M. Magnotte, Woodbridge, N.J.; Del Hall, Phoenix, Ariz., and Scott A. Tarter, Armonk, N.Y., assignors to The Pharmacy Fund, Inc., New York, N.Y.

Division of Ser. No. 175,338, Dec. 23, 1993, Pat. No. 5,550,734. This application Jul. 31, 1996, Ser. No. 690,561

Int. Cl.⁶ G06F *17/60;* **G06G** *7/52*

U.S. Cl. 395—204 **3 Claims**

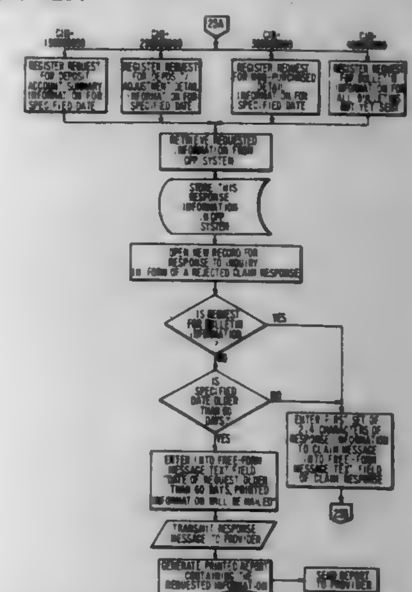

1. A computerized method for receiving and responding to an inquiry transmitted over an on-line pharmaceutical adjudication network and containing a request for information stored in database records, comprising:

(a) receiving an electronically transmitted insurance claim message from a service provider subscribing to the network;

(b) identifying the insurance claim message as an inquiry;

(c) reading from the inquiry and retrievably storing the following:

(i) a code indicating the date of the information requested; and

(ii) a code indicating the type of information requested;

(d) determining the date of the information requested, and the type of information requested by converting the codes according to predefined parameters;

(e) identifying one or more database records containing the type of information requested for the date of the information requested;

(f) accessing the database record or records to obtain the requested information, and retrievably storing the requested information so obtained;

(g) opening a response message in the form of a rejected claim response message which is standard for the on-line pharmaceutical adjudication network;

(h) transferring the requested information into one or more fields of the response message; and

(i) electronically transmitting the response message over the on-line pharmaceutical adjudication network to the service provider.

5,704,045

SYSTEM AND METHOD OF RISK TRANSFER AND RISK DIVERSIFICATION INCLUDING MEANS TO ASSURE WITH ASSURANCE OF TIMELY PAYMENT AND SEGREGATION OF THE INTERESTS OF CAPITAL

Douglas L. King, 6604 Covehollow Rd., Oklahoma City, Okla. 73123; Alasdair G. Barclay, The Boathouse, 6 Shaw Wood Rd., Pembroke, Bermuda, HM01, and Rockie C. Wellman, 727 Cedardale, Oklahoma City, Okla. 73127

Filed Jan. 9, 1995, Ser. No. 370,060

Int. Cl.⁶ G06F *17/00*

U.S. Cl. 395—235 **74 Claims**

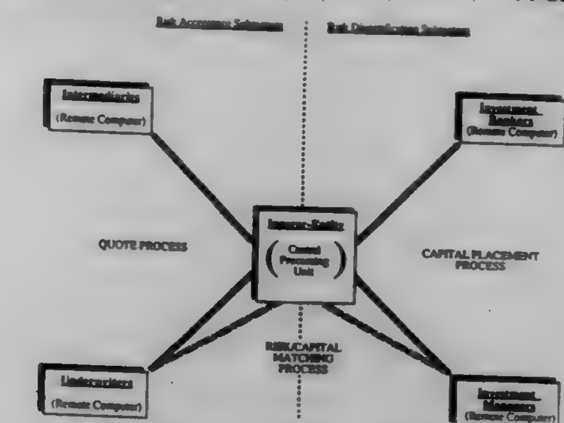

1. A method employing operatively interconnected, input, output and data processing means for facilitating through an entity, the transfer and acceptance of specifically defined risks through the entity from risk transferors to capital providers accepting the risk transferred, the method comprising:

creating an entity for facilitating the transfer of risk from one or more risk transferors through the entity to capital providers accepting the risk through the entity;

creating and maintaining a communications system for communications between risk transferors and capital providers through the entity;

creating within the entity a capital reserve system;

exchanging information between and among one or more risk transferors, one or more capital providers and the entity relating to the nature and character of the risk for the purpose of one or more willing risk transferors entering into a policy/contract with one or more willing capital providers having defined obligations including the maximum monetary exposure on the risk and the duration thereof; and

causing the capital provider(s) to transfer sufficient capital to the capital reserve system prior to the effective date of such contract which capital when combined with risk compensation and other income is sufficient to meet any and all such defined obligations during such contract period.

5,704,046

SYSTEM AND METHOD FOR CONDUCTING CASHLESS TRANSACTIONS

Edward J. Hogan, Bayside, N.Y., assignor to MasterCard International Inc., New York, N.Y.

Continuation of Ser. No. 191,637, Feb. 4, 1997, Pat. No. 5,557,516. This application May 30, 1996, Ser. No. 657,629

Int. Cl.⁶ G06F *157/00*

U.S. Cl. 395—239 **40 Claims**

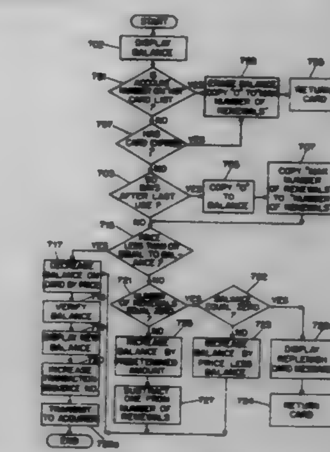

1. Terminal apparatus for conducting a cashless transaction requiring a transaction amount to complete said transaction, comprising:

means for receiving a card apparatus containing data representing at least an available fund;

means for reading said data from said card apparatus;

means responsive to at least said data representing said available fund for automatically increasing said available fund by a predetermined amount without insertion into said terminal of coins or cash, and without communication with an external central database for approval; and

means for decreasing said available fund by said transaction amount to complete said cashless transaction.

5,704,047

ATM COMMUNICATION SYSTEM WHEREIN UPSTREAM SWITCHING ELEMENT STOPS THE TRANSMISSION OF MESSAGE FOR A PREDETERMINED PERIOD OF TIME UPON BACKPRESSURE SIGNAL

Stefan Schneeberger, Vaterstetten, Germany, assignor to Siemens Aktiengesellschaft, Munich, Germany

Filed Sep. 20, 1995, Ser. No. 531,008

Claims priority, application European Pat. Off., Sep. 28, 1994, 94115289

Int. Cl.⁶ G06G *13/14*

U.S. Cl. 395—200.65 **4 Claims**

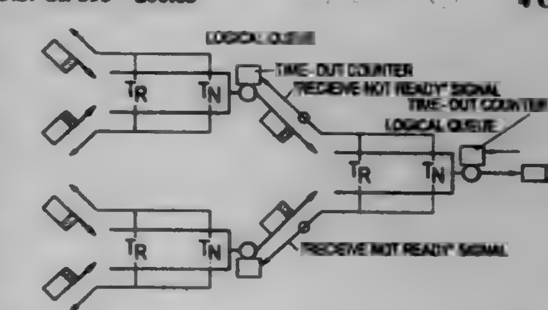

1. An ATM communication system for a statistical multiplexing of message cells belonging to virtual connections of at least two different traffic classes according to an asynchronous transfer mode, comprising:

a plurality of upstream interfaces in each case with an output to which at least one logical queue is connected;

at least one multi-stage funnel of switching elements connected to said plurality of upstream interfaces and at least one downstream interface connected to a last switching element of the respective funnel, each of the switching elements comprising a plurality of inputs and at least one output to which a logical queue is associated;
the logical queue of each of the switching elements being common for the different traffic classes;
means for defining a predetermined threshold for filling of the logical queue of the respective switching element for each of the traffic classes;
in case of exceeding the threshold for the respective traffic class by receiving a message cell for this traffic class, a back pressure mechanism is provided for transmitting a back pressure signal by the respective switching element only to the switching element or upstream interface, respectively, just transmitting this message cell; and
the switching element or upstream interface, respectively, just receiving the back pressure signal stopping transmission of message cells for a predetermined period of time periodically until resetting of the back pressure signal.

5,704,048

INTEGRATED MICROPROCESSOR WITH INTERNAL BUS AND ON-CHIP PERIPHERAL

Rod Fleck, and Werner Boening, both of München, Germany, assignors to Siemens Aktiengesellschaft, Munich, Germany

Continuation of Ser. No. 38,506, Mar. 29, 1993, abandoned. This application Nov. 2, 1995, Ser. No. 642,704

Claims priority, application Germany, Mar. 27, 1992, 92 105 368.2

Int. Cl.⁶ G06F *13/00;13/40*

U.S. Cl. 395—306 **19 Claims**

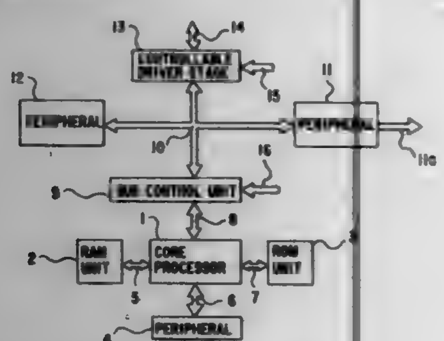

1. A microprocessor system, comprising:
an integrated microprocessor; and
an external bus having a plurality of signal lines;
said integrated microprocessor, including:
a plurality of terminals each connected to a respective one of said signal lines of said external bus;
a core processor;
at least one quasi-external bus having a plurality of signal lines each carrying a signal with a given timing performance;
said quasi-external bus having at least the same number of signal lines as said external bus, said signal lines including lines carrying control signals, address signals, and data signals;
each signal line of said external bus corresponding to a signal line of said quasi-external bus and carrying a signal corresponding to a respective signal of a corresponding signal line of said quasi-external bus;
each signal line of said external bus having the same timing performance as the respective signal of the corresponding signal line of said quasi-external bus;
a bus control unit connected to said core processor through an internal connecting bus and to said signal lines of said quasi-external bus, said bus control unit generating the signals of said quasi-external bus with said timing performance;
connecting means connecting said quasi-external bus to said external bus through said plurality of terminals and thereby maintaining the timing performance; and
at least one peripheral connected to said signal lines of said quasi-external bus.

5,704,049

SUBGLOBAL AREA ADDRESSING FOR ELECTRONIC PRICE DISPLAYS

George T. Briechle, New Canaan, Conn., assignor to Electronic Retailing Systems International Inc., Wilton, Conn.

Continuation-in-part of Ser. No. 995,048, Dec. 22, 1992. This application May 23, 1994, Ser. No. 247,334

Int. Cl.⁶ G06F *15/16*

U.S. Cl. 395—326 **48 Claims**

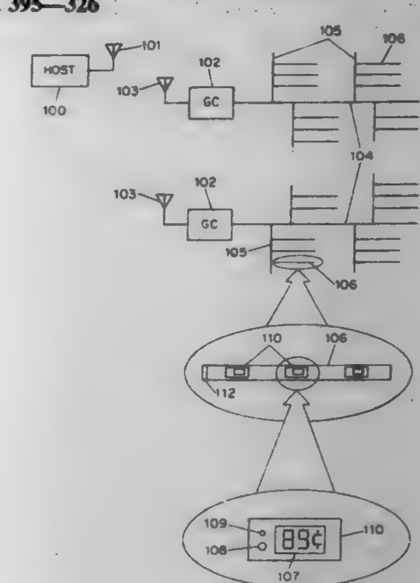

1. A method of addressing more than one and less than all of the display devices in an electronic display system, said system comprising a host and a multiplicity of electronic price display devices communicatively coupled with the host, each display device having a respective unique address and responsive to messages from the host containing said unique address, said method comprising the steps of:
selecting a first particular subglobal address value;
storing to substantially all of the display devices respective subglobal address values such that the particular subglobal address value is stored to more than one and less than all of the display devices;
broadcasting to the display devices a command comprising:
an indication that the command is to be addressed with respect to each display device's respective subglobal address; and
a second particular subglobal address value;
within each display device, comparing the second particular subglobal address value with the display device's respective stored subglobal address value, and performing a predetermined action if the second particular subglobal address value bears a predetermined relation to the display device's respective stored subglobal address value.

5,704,050

SNAP CONTROL FOR RELOCATING ELEMENTS OF A GRAPHICAL USER INTERFACE

Sarah D. Redpath, Cary, N.C., assignor to International Business Machine Corp., Armonk, N.Y.

Filed Jun. 29, 1995, Ser. No. 496,486

Int. Cl.⁶ G06F *15/00*

U.S. Cl. 395—339 **10 Claims**

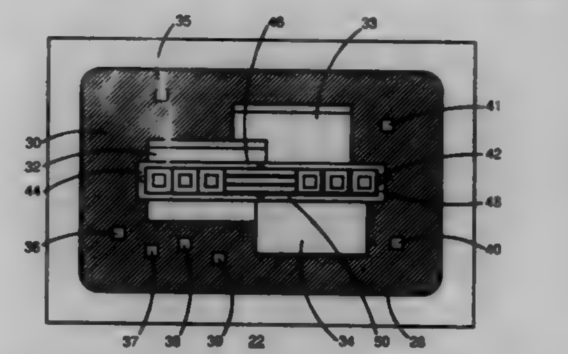

1. Computer readable code stored on computer-readable medium for moving a window from a first position in a graphical user interface desktop displayed on a display screen, comprising:
first subprocesses for causing a computer to display at least one first user selectable component associated with the window;
second subprocesses for automatically causing the computer to move the window, upon user selection of one of the at least one first user selectable components, to a second position in the desktop associated therewith, wherein the second position permits only a portion of the window to remain visible along an edge of the displayed portion of the desktop; and
third subprocesses for causing the computer to display a second user selectable component when the window is in the second position; and
fourth subprocesses for causing the computer to move the window to the first position in the graphical user interface upon user selection of the second selectable component
wherein each of the user selectable components includes a directional arrow displayed therein indicating a direction of movement of the window when the component is selected by the user.

5,704,051

HIERARCHICAL MENU BAR SYSTEM WITH DYNAMIC GRAPHICS AND TEXT WINDOWS

Ronald S. Lane, and Miriam Weiss Lane, both of 3 Eagle View Ct., Monsey, N.Y. 10952

Continuation of Ser. No. 155,464, Nov. 19, 1993, abandoned. This application Mar. 11, 1996, Ser. No. 613,527

Int. Cl.⁶ G06F *3/00*

U.S. Cl. 395—357 **2 Claims**

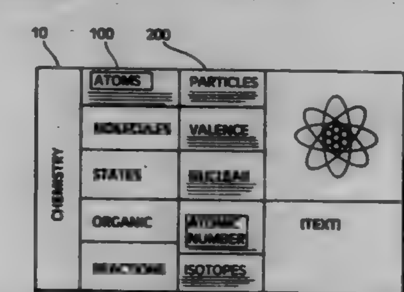

1. A data processing system for hierarchical access to a multilevel application comprising:
display screen controller for selective and programmed control of a two-dimensional screen display;
pointing input device for entering input events by the user, controlling a displayed cursor, and comprising a button;
a single display means for subdividing the display screen into a single simultaneous presentation composing a primary menu bar, a secondary menu bar, a tertiary menu bar, a graphics window, and a text window, wherein the primary menu bar contains a single menu item and the secondary and tertiary menu bars contain a plurality of menu items containing a label and selectable by the displayed cursor, wherein each menu bar is subdivided between the menu items, wherein primary menu bar provides a single subject menu item, wherein the secondary menu bar provides menu items corresponding to the primary categorical item with increasing level of detail, wherein the tertiary menu bar provides menu items corresponding to the secondary display bar with increasing level of detail in response to selecting a secondary menu item;
default screen display means for initially displaying blank data in graphics window, text window, and the tertiary bar until selection of a menu item;
secondary menu item display coding regimen means for displaying differing and distinct colors and patterns in the secondary menu items;
secondary bar position determination means for determining the cursor located over a secondary menu item;
tertiary menu bar accessing means for accessing tertiary menu items in response to the cursor located over a secondary menu bar item;
tertiary menu item display coding regimen means for displaying the distinct color and pattern in the tertiary menu items corresponding to the selected secondary menu item;
highlighting means for highlighting the tertiary menu item in response to a cursor located over a tertiary menu item;
activation means for activating the button on the cursor input device after highlighting a menu item;
memory for storing data files containing data for display in the graphics window and text window;
graphics window for displaying graphics, image and video data corresponding to an arbitrarily selected menu item in one of the bars and corresponding to the level of detail of the menu item;
text window for displaying text corresponding to an arbitrarily selected menu item in one of bars and corresponding to the level of detail of the selected menu item, wherein multiple pages may be scrolled; and
tertiary menu bar replacement means for replacing the tertiary menu items in response to retreating to the secondary menu bar and selecting a different secondary menu bar item.

5,704,052

BIT PROCESSING UNIT FOR PERFORMING COMPLEX LOGICAL OPERATIONS WITHIN A SINGLE CLOCK CYCLE

Gary C. Wu, Wayne; Chandra S. Pawar, Harleysville; Steven H. Leibowitz, Norristown; Edward J. Pullin, West Chester; Michael J. Hazzard, Downingtown, and Joseph C. Duggan, Glenside, all of Pa., assignors to Unisys Corporation, Blue Bell, Pa.

Continuation of Ser. No. 352,092, Nov. 6, 1994, abandoned. This application Apr. 22, 1996, Ser. No. 635,541

Int. Cl.⁶ G06F *7/52*

U.S. Cl. 395—380 **41 Claims**

26. A microprocessor for executing instructions within an instruction stream, comprising:
an instruction register that functions as queue for instructions before execution;
a register file having a plurality of general purpose registers;
an arithmetic logic unit, connected to said register file and said instruction register, that executes said instructions having arithmetic operations; and
a bit processing unit, connected to said register file and said instruction register, configured to execute said instructions having complex logical operations within a single clock cycle, wherein said bit processing unit includes:

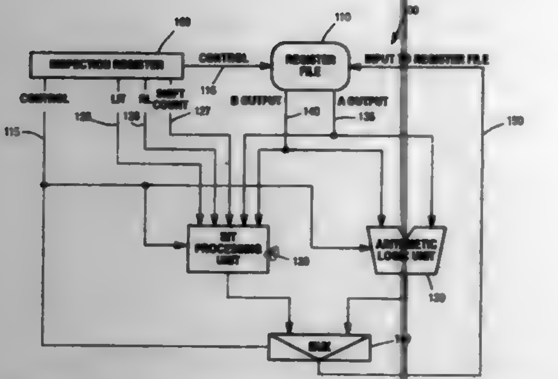

a shift functional unit having a first input and a second input connected to said instruction register and an output,
a first multiplexer having a first input connected to said register file, a second input and a control input connected to said instruction register, and an output,
a shift/rotate functional unit having a first input connected to said register file representing an input word, a control input connected to said output of said first multiplexer and an output,
a first AND gate having a first input connected to said output of said shift functional unit, a second input connected to said output of said shift/rotate functional unit, and an output,
a second multiplexer having a first input connected to said output of said first AND gate, a second input and third input connected to said instruction register, and an output,
a second AND gate having a first input connected to said register file, a second input connected to said output of said shift functional unit, and an output,
an XOR gate having a first input connected to said output of said second multiplexer, a second input connected to said output of said second AND gate, and an output, and
an OR gate having an input connected to said output of said XOR gate and an output, said output representing the result of "a compare bit-field" operation that sets a match flag register.

5,704,053
EFFICIENT EXPLICIT DATA PREFETCHING ANALYSIS AND CODE GENERATION IN A LOW-LEVEL OPTIMIZER FOR INSERTING PREFETCH INSTRUCTIONS INTO LOOPS OF APPLICATIONS
Vatsa Santhanam, Campbell, Calif., assignor to Hewlett-Packard Company, Palo Alto, Calif.
Filed May 18, 1995, Ser. No. 443,653
Int. Cl.⁶ G06F *9/45*
U.S. Cl. 284—383 **17 Claims**

6. A method for mitigating or eliminating cache misses in a low level optimizer, comprising the steps of:
performing loop body analysis;
unrolling loops to reduce prefetch instruction overhead;
identifying uniformly generated equivalence classes of memory references in a code stream, where said equivalence classes represent disjoint sets of memory references occurring in a loop whose address expressions can be expressed as a linear function of the same basic loop induction variable and are known to differ only by a compile time constant, allowing the detection of group spatial and group temporal locality among said different memory references;
computing an effective memory stride for each of the equivalence classes;
determining the number of prefetch instructions needed for full cache miss coverage for each equivalence class, where the number of prefetch instructions that needs to be inserted is a function of the style of prefetching desired, including dumb prefetching that inserts an explicit prefetch instruction for each memory reference, baseline prefetching that inserts as

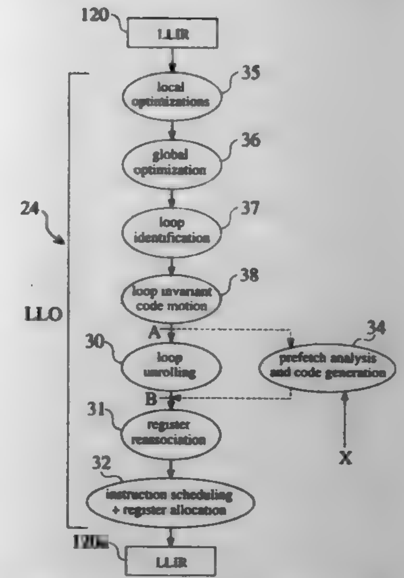

many prefetch instructions as possible without affecting the resource minimum loop iteration latency, and selective prefetching that inserts as many prefetch instructions as are required to ensure full cache miss coverage, exploiting any group-spatial or group-temporal locality that may be apparent among memory references within a uniformly generated equivalence class; and
inserting prefetch instructions identified into said code stream.

5,704,054
COUNTERFLOW PIPELINE PROCESSOR ARCHITECTURE FOR SEMI-CUSTOM APPLICATION SPECIFIC IC'S
Debashis Bhattacharya, Hamden, Conn., assignor to Yale University, New Haven, Conn.
Filed May 9, 1995, Ser. No. 438,662
Int. Cl.⁶ G06F *9/30;9/38*
U.S. Cl. 395—388 **8 Claims**

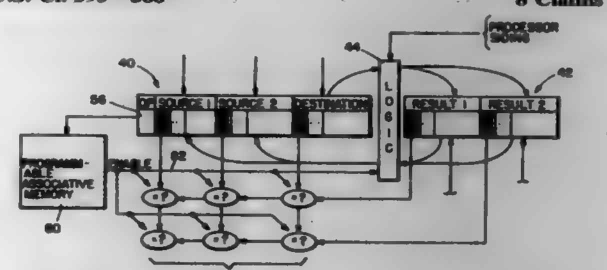

1. A pipeline processor wherein instructions flow in a first direction and results flow in a second opposing direction in the pipeline, said pipeline processor comprising:
program means for issuing instructions in said first direction in said pipeline, certain said instructions including user-defined operation codes;
register means for storing and issuing results in said second opposing direction in said pipeline;
plural pipeline stages connected between said program and said register means, at least one pipeline stage comprising instruction latch means connected to receive and issue instructions in said first direction, result latch means connected to receive and issue result data in said second opposing direction, logic means coupling said instruction latch means and result latch means for determining when result data and instructions are associated and further responsive to a predetermined pipeline operation code to execute a received instruction, said logic means being non-responsive to a user-defined operation code that is related to said received instruction, to execute said received instruction, said at least one pipeline stage further

including conversion means for determining a correspondence between a user-defined operation code and said predetermined pipeline-operation code and, upon occurrence of said correspondence, enabling said logic means to execute at least one operation with respect to said received instruction or result; and
processing siding means coupled to at least some said plural pipeline stages for performing logical operations on said result data in accordance with pipeline operation codes.

5,704,055
DYNAMIC RECONFIGURATION OF MAIN STORAGE AND EXPANDED STORAGE BY MEANS OF A SERVICE CALL LOGICAL PROCESSOR
Jonel George, Pleasant Valley; Steven Gardner Glassen, Wallkill; Matthew Anthony Krygowski, Hopewell Junction; Moon Ju Kim, Wappingers Falls; Allen Herman Preston, and David Emmett Stucki, both of Poughkeepsie, all of N.Y., assignors to International Business Machines Corporation, Armonk, N.Y.
Continuation of Ser. No. 70,588, Jun. 1, 1993, abandoned.
This application Apr. 22, 1996, Ser. No. 635,537
Int. Cl.⁶ G06F *12/00;13/00*
U.S. Cl. 395—402 **2 Claims**

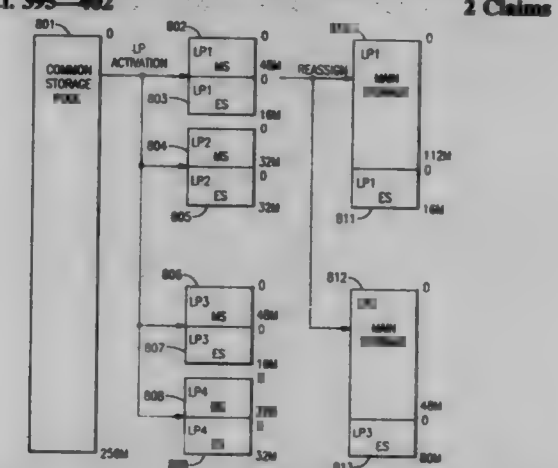

1. A data processing system including a processing unit for program execution and for data processing, an operating system program for controlling the operation of said data processing system, and a service call logical processor, said data processing system comprising in combination:
a pool of increments of physical memory, from which pool, increments of main memory address locations and increments of expanded memory address locations are assigned;
a configuration table including flags which indicate the assigned status of an increment in said pool of increments of physical memory as an increment of main memory address locations, as an increment of unassigned main memory address locations, as an increment of expanded memory address locations, or as an increment of unassigned expanded memory address locations;
said service call logical processor dynamically changing an increment status in said pool of increments of physical memory by means of a service call instruction which changes a flag associated with the increment to be changed without disruption of the operating system program or any application program;
said service call instruction including an instruction for changing the status of an increment assigned as main memory address locations to the status of unassigned main memory address locations, an instruction for changing the status of an increment unassigned as main memory address locations to the status of assigned as expanded memory address locations, an instruction for changing the status of an increment assigned as expanded memory address locations to the status of unassigned expanded memory address locations, and an instruction for changing the status of an increment unassigned as expanded memory address locations to the status of assigned as main memory address locations;
wherein in hypervisor mode, when a logical partition is activated, said main memory address locations and said expanded memory address locations are assigned from the increment physical memory pool as specified by memory assignment parameters for said logical partition; and after said logical partition is activated, portions of said main memory address locations and said expanded memory address locations for said logical partition is unassigned in multiples of increments.

5,704,056
CACHE-DATA TRANSFER SYSTEM
Ryuji Fujita, and Hirohide Sugahara, both of Kawasaki, Japan, assignors to Fujitsu Limited, Kawasaki, Japan
Continuation of Ser. No. 145,563, Nov. 4, 1993, abandoned.
This application Mar. 18, 1996, Ser. No. 618,275
Claims priority, application Japan, Nov. 4, 1992, 4-294908
Int. Cl.⁶ G06F *12/00*
U.S. Cl. 395—445 **10 Claims**

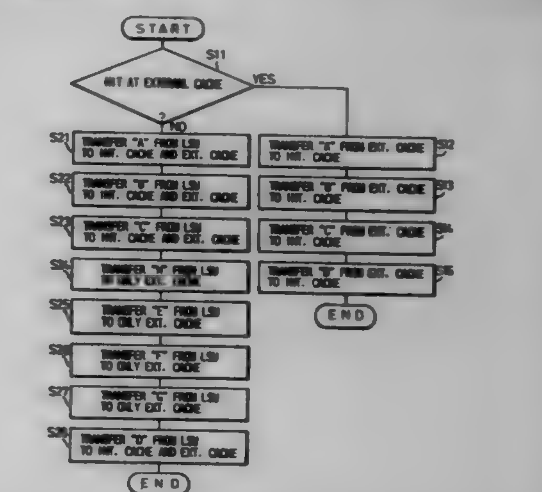

1. A cache-data transfer system comprising:
storage means for storing programs and data to be processed;
a microprocessor operated in accordance with the programs and using the data, said microprocessor comprising an internal cache memory comprising a number of first blocks, each of the first blocks comprising M words, said internal cache memory receiving and storing the data consecutively stored in the storage means, wherein M is an integer;
an external cache memory coupled to the microprocessor and comprising a number of second blocks, each of the second blocks comprising N words, said external cache memory receiving and storing the data consecutively stored in the storage means, wherein N is an integer larger than M; and
memory control means for controlling a data transfer process transferring data from the storage means to the internal cache memory and the external cache memory according to the following sequence:
first, said memory control means consecutively transferring data corresponding to up to M-1 words from the storage means to one of said first blocks of the internal cache memory and to one of said second blocks of the external cache memory leaving a space of at least one word-unit in said one of said first blocks and said one of said second blocks empty,
second, said memory control means consecutively transferring data corresponding to up to N–M words from the storage means only to said one of said second blocks of the external cache memory, and
third, said memory control means consecutively transferring data corresponding to at least one word to the empty word-unit of said one of said first blocks of the internal cache

memory and that of said one of said second blocks of the external cache memory,
said microprocessor executing a next data transfer process after said empty word-unit in said one of said first blocks of the internal cache memory receives the data from the storage means.

5,704,057
REAL-TIME DATA SORTER
Kichul Cho, Mystic, Conn., assignor to The United States of America as represented by the Secretary of the Navy, Washington, D.C.
Filed Oct. 1, 1992, Ser. No. 955,388
Int. Cl.[6] G06F *12/02;7/24*
U.S. Cl. 395—481 **9 Claims**

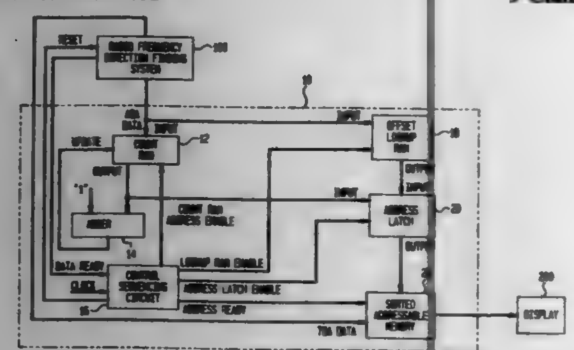

1. An apparatus for real-time data sorting of an incoming stream of data points, each data point defining a data point value and being associated with a time of arrival, comprising:
first memory means having an input for receiving the data point values within the incoming stream of data points and an output, each data point value being indicative of an address of said first memory means wherein a count value is stored in said first memory means at the address of said first memory means, said count value being made available at the output of said first memory means;
an adder having an input coupled to the output of said first memory means for incrementing said count value by one, and said adder having an output coupled to said first memory means wherein said count value incremented by one is stored at said address of said first memory means;
second memory means having an input for receiving the data point values within the incoming stream of data points and an output, each data point value being indicative of an address of said second memory means, wherein a unique offset value is stored in said second memory means at each said address of said second memory means, said unique offset value being made available at the output of said second memory means;
address latch means having an input coupled to the outputs of said first memory means and said second memory means for generating a concatenated address value based on said count value and said unique offset value, said address latch means further having an output; and
storage means coupled to the output of said address latch means for storing time of arrival of each data point value at an address equivalent to said concatenated address value means for generating timing control signals issued to said first memory means, said second memory means, said address latch means and said storage means.

5,704,058
CACHE BUS SNOOP PROTOCOL FOR OPTIMIZED MULTIPROCESSOR COMPUTER SYSTEM
John E. Derrick, 14 Hunting Ridge La., Milton, Vt. 05468, and Christopher M. Herring, P.O. Box 7673, Longmont, Colo. 80501
Filed Apr. 21, 1995, Ser. No. 426,503
Int. Cl.[6] G06F *12/00;13/38*
U.S. Cl. 395—495 **3 Claims**

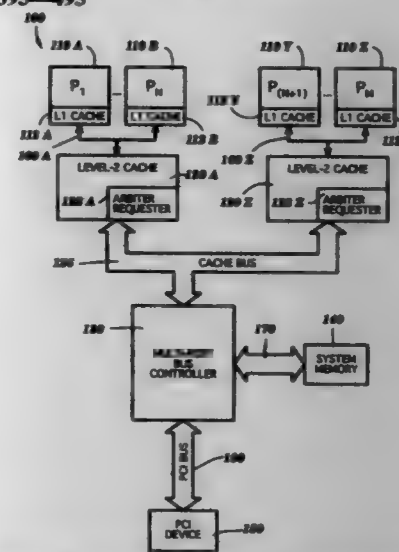

1. A method of allocating windows of cache bus bandwidth for cache to cache and system snoop activity on a need basis to minimize impact on performance while maximizing memory page hit accesses comprising the steps of:
providing an address space having cacheable and non-cacheable portions;
providing a cycle request for access to a selected address within the address space;
determining from the selected address if the cycle request requires snoop activity by determining whether the selected address is in the cacheable address space;
allowing local bus and expansion bus activity to occur on the cache bus if the cycle request is for non-cacheable address space not requiring snoop activity; and
delaying the cycle request if snoop activity is required until it can be determined that the necessary snoop and write-back cycles can be completed.

5,704,059
METHOD OF WRITE TO GRAPHIC MEMORY WHERE MEMORY CELLS DESIGNATED BY PLURALITY OF ADDRESSES SELECTED SIMULTANEOUSLY FOR ONE ROW ADDRESS ARE WRITTEN
Kazuki Ohno, Tokyo, Japan, assignor to NEC Corporation, Tokyo, Japan
Filed Jul. 18, 1996, Ser. No. 683,218
Claims priority, application Japan, Jul. 28, 1995, 7-193553
Int. Cl.[6] G06F *12/06;13/00*
U.S. Cl. 395—515 **3 Claims**

1. A write method to a graphic memory comprising:
a first step of dividing the area corresponding to the column addresses designated by one row address of a memory cell array into a plurality of segments each consisting of an arbitrary number of column addresses;
a second step of designating a start address and an end address for each of said plurality of segments based on a first piece of information of column address information;
a third step of specifying the section designated by said start address and said end address as candidates for write object areas; and

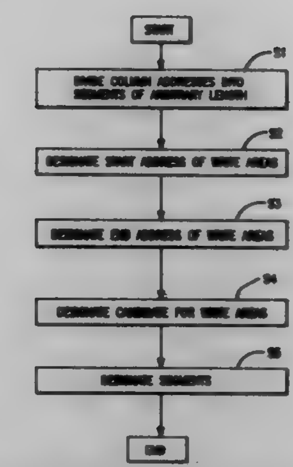

a fourth step of selecting segments having write object areas based on a second piece of information of said column address information and writing specified data to said candidates for write object areas of segments having the write object areas.

5,704,060
TEXT STORAGE AND RETRIEVAL SYSTEM AND METHOD
Michael G. Del Monte, 417 Cabrillo Ter., Corona Del Mar, Calif. 92625
Filed May 22, 1995, Ser. No. 445,661
Int. Cl.[6] G06F *17/30*
U.S. Cl. 395—600 **20 Claims**

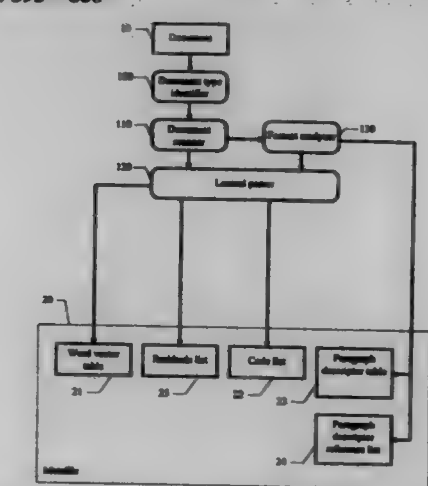

1. A computer-based system for storing text, comprising:
a lexical parser which divides said text into search terms and all other information;
a word vector table which stores said search terms solely as an inverted structure, wherein each said search term is stored uniquely and each said search term is coupled with a list of its positions within said text; and
a first auxiliary data structure which stores only said other information;
wherein said word vector table and said first auxiliary data structure contain sufficient information substantially to reproduce said text.

5,704,061
METHOD AND APPARATUS FOR CREATING CYLINDRICAL THREE DIMENSIONAL PICTURE
Victor G. Anderson, Arlington, Tex., assignor to Pinnacle Brands, Inc., Grand Prairie, Tex.
Continuation of Ser. No. 330,862, Dec. 27, 1994, abandoned, which is a continuation-in-part of Ser. No. 195,194, Feb. 14, 1994, which is a continuation-in-part of Ser. No. 2,969, Jan. 11, 1993, Pat. No. 5,365,294. This application Mar. 22, 1996, Ser. No. 621,799
Int. Cl.[6] G03B *35/00*
U.S. Cl. 396—330 **20 Claims**

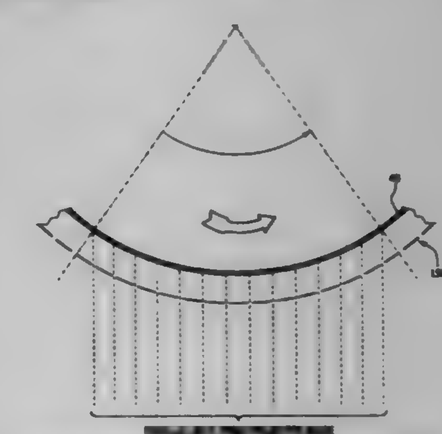

1. A system for creating an animated image of a subject, comprising:
a photograph containing an ordered sequence of images of the subject photographed in animated motion, said images created using a film layer and an aperture between the film layer and the subject, the film layer used to produce the photograph;
a substrate having a cylindrical shape for supporting the photograph;
a lenticular lens having a plurality of lenticulars and positioned between the photograph and a viewer thereof, the width of the aperture equal to the subtended chord of a lens lobe angle 2 where ∠° denotes the lens lobe angle and R equals the radius of the substrate plus the thickness of the lenticular lens, the lens lobe equal to 2, where P=1/L, L is the number of lenticulars per unit of circumference of the lens, and C=T−r, where T is the thickness of the lenticular lens and r is the radius of curvature of the lenticulars, wherein the images may be viewed in the ordered sequence in response to rotation of the substrate to create the animated image.

DESIGNS

DECEMBER 30, 1997

388,235

LEAF-SHAPED EDIBLE PRODUCT

Warren J. Wilson, and Sara H. Wilson, both of 7 W. Shore Dr., Pennington, N.J. 08534-2118

Filed Feb. 13, 1997, Ser. No. 66,356

Term of patent 14 years

LOC (6) Cl. 01 - *01*

U.S. Cl. D1—115

388,236

CONICAL FOOD ARTICLE

Ward J. Goldstein, Solana Beach, Calif., assignor to Conewich Enterprises L.P., San Diego, Calif.

Continuation of Ser. No. 450,488, May 26, 1995, Pat. No. 5,626,897, which is a continuation-in-part of Ser. No. 973,904, Nov. 20, 1992, abandoned, which is a continuation-in-part of Ser. No. 715,628, Jun. 14, 1991, abandoned. This application Nov. 18, 1996, Ser. No. 62,503

Term of patent 14 years

LOC (6) Cl. 01 - *01*

U.S. Cl. D1—130

388,237

NECKTIE

Reid H. Mirvis, and Adelina C. Mirvis, both of 6669 Archwood Ave., San Diego, Calif. 92120

Filed Oct. 24, 1996, Ser. No. 61,473

Term of patent 14 years

LOC (6) Cl. 02 - *05*

U.S. Cl. D2—608

388,238

COMBINED NECKTIE AND SCARF SLIDE

Jeff M. LaBorde, and Margarita J. LaBorde, both of 11528 Hela Ave., Lake View Terrace, Calif. 91342

Filed Mar. 1, 1996, Ser. No. 50,973

Term of patent 14 years

LOC (6) Cl. 02 - *05*

U.S. Cl. D2—609

388,239
HOOD

Meng Li, and Shan F. He, both of #4 Christian Dr., E. Brunswick, N.J. 08816

Filed Dec. 2, 1996, Ser. No. 63,187

Term of patent 14 years

LOC (6) Cl. 02 - *03*

U.S. Cl. D2—878

388,240
HAT

Raymond L. Martz, 1036 W. Mallard Dr., Palatine, Ill. 60067

Filed Dec. 3, 1996, Ser. No. 63,252

Term of patent 14 years

LOC (6) Cl. 02 - *03*

U.S. Cl. D2—884

388,241
SHOE SOLE

Jean-Paul Merceron, Monthodon, France, assignor to L'Article Chaussant Europeen, Chateau-Renault, France

Filed Aug. 2, 1996, Ser. No. 57,909

Claims priority, application France, Feb. 2, 1996, 96 0657

Term of patent 14 years

LOC (6) Cl. 02 - *04*

U.S. Cl. D2—959

388,242
MEN'S INSOLE

Brian B. Cole, Memphis, Tenn., assignor to Schering-Plough HealthCare Products, Memphis, Tenn.

Filed Aug. 30, 1996, Ser. No. 59,044

Term of patent 14 years

LOC (6) Cl. 02 - *04*

U.S. Cl. D2—961

388,243
CLIMBING BOOT HARNESS

Vincent A. Lupo, West Hills, Calif., assignor to V.A. Wolf Inc., Burbank, Calif.

Filed Jul. 23, 1996, Ser. No. 57,329

Term of patent 14 years

LOC (6) Cl. 02 - *04*

U.S. Cl. D2—963

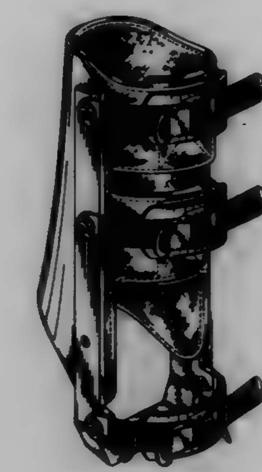

388,244
SHOE TONGUE COVER

Ralph Serna, Long Beach, Calif., assignor to Vans, Inc., Santa Fe Springs, Calif.

Filed Dec. 20, 1996, Ser. No. 64,001

Term of patent 14 years

LOC (6) Cl. 02 - *99*

U.S. Cl. D2—972

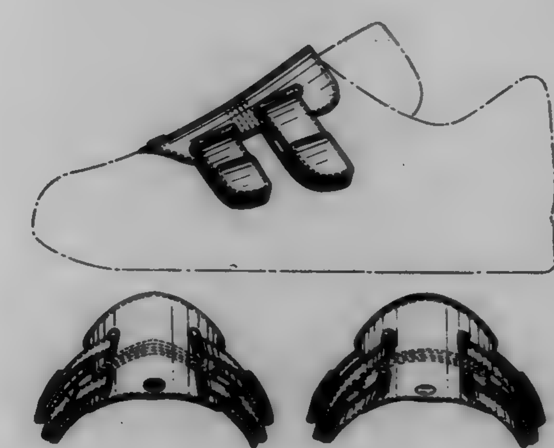

388,245
TUBE SOCK WITH FASTENER

Glenn Lindaman, 690 S. 10th St., Allentown, Pa. 18103

Continuation-in-part of Ser. No. 47,988, Dec. 18, 1995, which is a continuation-in-part of Ser. No. 45,130, Oct. 10, 1995, Pat. No. Des. 377,265, which is a continuation-in-part of Ser. No. 17,056, Jan. 5, 1994, Pat. No. Des. 362,957. This application Feb. 12, 1996, Ser. No. 51,770

Term of patent 14 years

LOC (6) Cl. 02 - *04*

U.S. Cl. D2—993

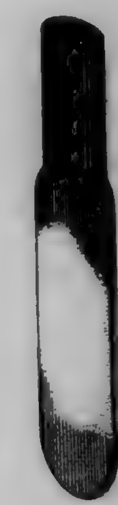

388,246
PORTABLE KEYBOARD CARRIER

Matt T. Patterson, Los Angeles, Calif., assignor to Walkabout, Inc., Los Angeles, Calif.

Filed Sep. 27, 1996, Ser. No. 60,435

Term of patent 14 years

LOC (6) Cl. 03 - *01*

U.S. Cl. D3—204

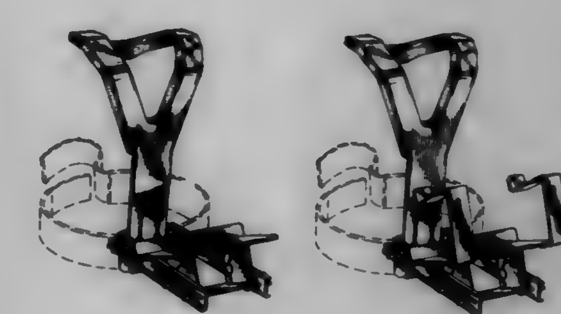

388,247
BABY CARRIER
Barbara Anne McLauchlan, 373a Lower Styx Road, Christchurch, New Zealand
Filed Jan. 21, 1997, Ser. No. 65,487
Term of patent 14 years
LOC (6) Cl. 03 - *99*
U.S. Cl. D3—213

388,248
BACKPACK
Toby Rohrbach, San Clemente, Calif., assignor to Oakley, Inc., Foothill Ranch, Calif.
Filed Jul. 15, 1996, Ser. No. 56,993
Term of patent 14 years
LOC (6) Cl. 03 - *01*
U.S. Cl. D3—217

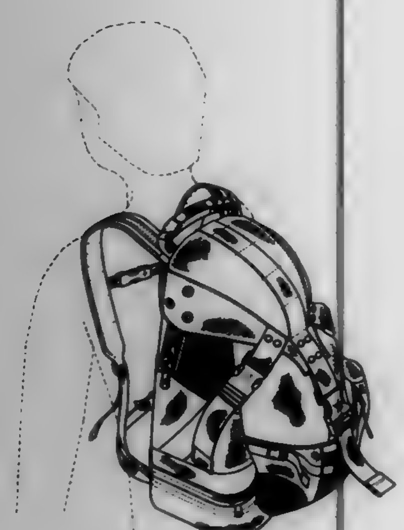

388,249
HOLSTER FOR A PAGER
Jose Negron, 400 Cozine Ave., Apt. 3F, Brooklyn, N.Y. 11207
Filed May 6, 1996, Ser. No. 54,093
Term of patent 14 years
LOC (6) Cl. 03 - *01*
U.S. Cl. D3—218

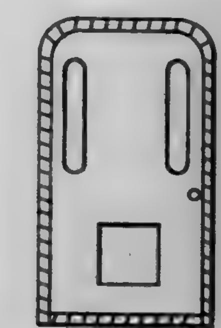

388,250
ZIPPER CLOSED BAG WITH ZIPPERED POCKETS
Victor T. Robinson; Michael Butt, both of Menlo Park, and C. Martin Smith, Los Angeles, all of Calif., assignors to The Libman Company, Arcola, Ill.
Filed Sep. 27, 1996, Ser. No. 60,369
Term of patent 14 years
LOC (6) Cl. 03 - *01*
U.S. Cl. D3—245

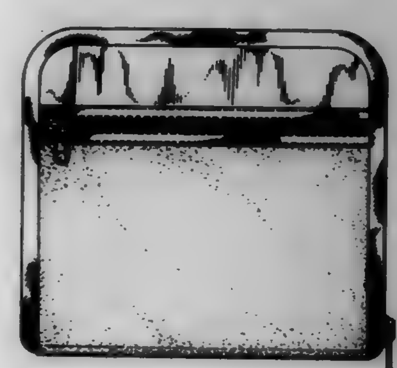

388,251
HAND LUGGAGE FOR CARRYING PET SUPPLIES
Judy Smith, P.O. Box 1784, Middleburg, Va. 22117
Filed Nov. 9, 1995, Ser. No. 46,252
The portion of the term of this patent subsequent to Nov. 25, 2011, has been disclaimed.
Term of patent 14 years
LOC (6) Cl. 03 - *01*
U.S. Cl. D3—291

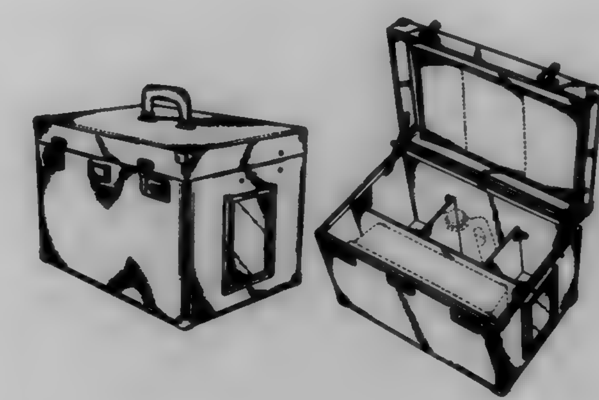

388,252
ELECTRIC TOOTHBRUSH
Franz Alban Stützer, Offenbach am Main, and Bernd Figur, Schaafheim/Schlierbach, both of Germany, assignors to Rowenta-Werke GmbH, Offenbach a.M., Germany
Filed Aug. 29, 1996, Ser. No. 58,978
Claims priority, application Germany, Feb. 29, 1996, M9601935.2
Term of patent 14 years
LOC (6) Cl. 04 - *02*
U.S. Cl. D4—101

388,253
TOOTHBRUSH
Dojin Ra, 128 E. Harwood Ter., Palisades Park, N.J. 07650
Filed Sep. 19, 1996, Ser. No. 59,999
Term of patent 14 years
LOC (6) Cl. 04 - *02*
U.S. Cl. D4—104

388,254
CHILD'S TOOTHBRUSH
Carl Schiffer, Neustadt-Wied, Germany, assignor to M+ C Schiffer GmbH, Newstadt-Wied, Germany
Filed Nov. 22, 1996, Ser. No. 62,722
Claims priority, application Germany, Jul. 3, 1996, M9605744.0
Term of patent 14 years
LOC (6) Cl. 04 - *02*
U.S. Cl. D4—107

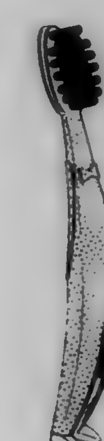

388,255
FABRIC
Fritz Bayer, 57-59, Neuenseer Str., 96244 Michelau, Germany
Filed Jun. 6, 1996, Ser. No. 55,496
Claims priority, application WIPO, Dec. 18, 1995, MK/RE/PP003600
Term of patent 14 years
LOC (6) Cl. 05 - *06*
U.S. Cl. D5—26

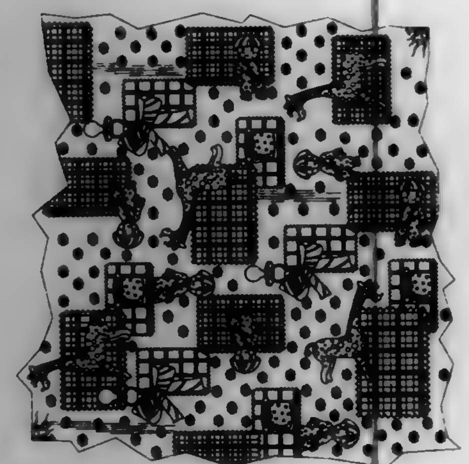

388,256
MOTORCYCLE FURNITURE
Bené M. Cambra, Concord, and Kenneth Tarlow, Corte Madera, both of Calif., assignors to Bene Cambra, Concord, Calif.
Filed Jun. 19, 1996, Ser. No. 55,980
Term of patent 14 years
LOC (6) Cl. 06 - *01*
U.S. Cl. D6—358

388,257
RECLINER LOUNGE CHAIR
Raymond Grosfillex, Oyonnax, France, assignor to Grosfillex Sarl, Oyonnax, France
Filed Jul. 24, 1996, Ser. No. 57,401
Claims priority, application Hague Agreement, Jan. 26, 1996, DM/037723
Term of patent 14 years
LOC (6) Cl. 06 - *01*
U.S. Cl. D6—361

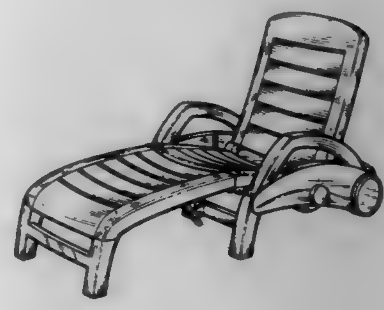

388,258
CHAIR
Emilio Ambasz, Buenos Aires, Argentina, assignor to Center for Design Research & Development N.V., Curacao, Netherlands Antilles
Filed Sep. 19, 1996, Ser. No. 59,991
Term of patent 14 years
LOC (6) Cl. 06 - *01*
U.S. Cl. D6—366

388,259
SEAT
Pasquale Natuzzi, Santeramo In Colle, and Domenico Abbruzzese, Gioia del Colle, both of Italy, assignors to Industrie Natuzzi, Spa, Bari, Italy
Filed Dec. 11, 1996, Ser. No. 63,629
Term of patent 14 years
LOC (6) Cl. 06 - *01*
U.S. Cl. D6—381

388,260
SEAT
Pasquale Natuzzi, Bari, and Arcangelo Scarati, Taisano, both of Italy, assignors to Industrie Natuzzi, Spa, Bari, Italy
Filed Dec. 11, 1996, Ser. No. 63,657
Term of patent 14 years
LOC (6) Cl. 06 - *01*
U.S. Cl. D6—381

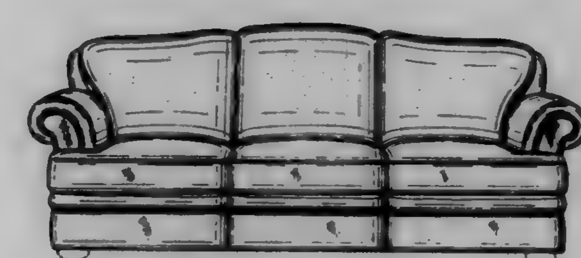

388,261
SEAT
Pasquale Natuzzi, and Raffaella Lucarelli, both of Santeramo In Colle, Italy, assignors to Industrie Natuzzi, Spa, Bari, Italy
Filed Dec. 30, 1996, Ser. No. 64,393
Term of patent 14 years
LOC (6) Cl. 06 - *01*
U.S. Cl. D6—381

388,262
MUSIC STAND
Gary M. Benting, Owatonna; Eric J. Mueller, and Cindy Weber, both of Minneapolis, all of Minn., assignors to Wenger Corporation, Owatonna, Minn.
Filed May 9, 1996, Ser. No. 54,329
Term of patent 14 years
LOC (6) Cl. 06 - *04*
U.S. Cl. D6—419

388,263
COMBINED BOOK AND RECIPE CARD STAND
Linda H. Amerault, 193 Myrtlewood Dr., Calimesa, Calif. 92320-1720
Filed Oct. 11, 1996, Ser. No. 62,953
Term of patent 14 years
LOC (6) Cl. 06 - *04*
U.S. Cl. D6—419

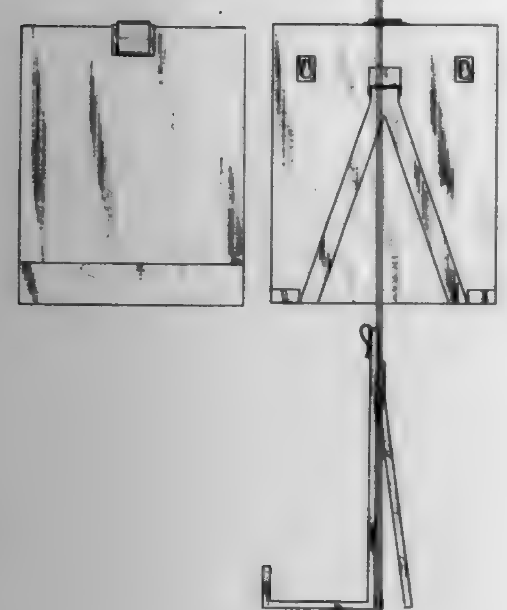

388,264
COMBO UNIT
Merlin A. Brunner, Appleton, and Harvey J. Draheim, Weyauwega, both of Wis., assignors to Simmons Juvenile Products Company, Inc., New London, Wis.
Filed Aug. 22, 1996, Ser. No. 58,788
Term of patent 14 years
LOC (6) Cl. 06 - *04*
U.S. Cl. D6—439

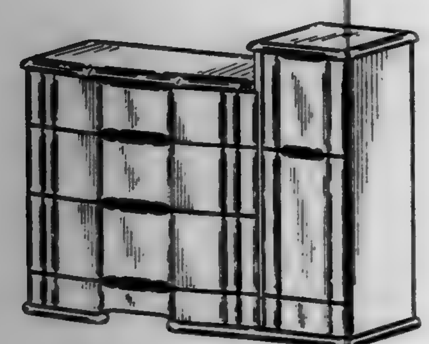

388,265
ARMOIRE
H. Thomas Keller, High Point, N.C., assignor to Henredon Furniture Industries, Inc., Morganton, N.C.
Filed Oct. 6, 1995, Ser. No. 46,575
Term of patent 14 years
LOC (6) Cl. 06 - *04*
U.S. Cl. D6—445

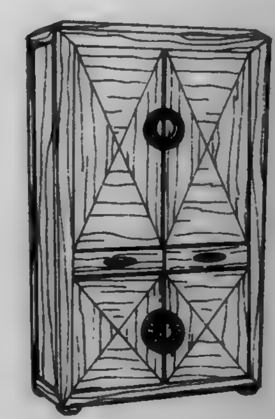

388,266
BOOK DISPLAY STAND
Herbert R. Axelrod, 6 Marine Pl., Deal, N.J. 07753
Filed Dec. 16, 1996, Ser. No. 63,807
Term of patent 14 years
LOC (6) Cl. 06 - *04*
U.S. Cl. D6—468

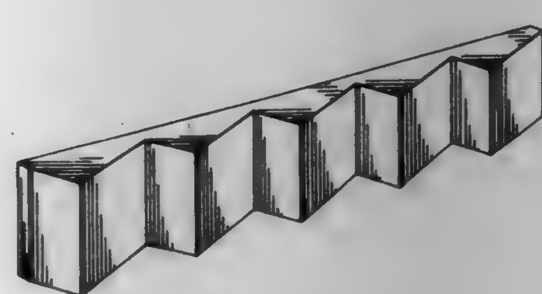

388,267
SHELF UNIT
John Robert Newkirk, Bonita Springs, Fla., and Paul Henry Winter, Wilmington, Del., assignors to Zenith Products Corporation, New Castle, Del.
Filed Aug. 29, 1996, Ser. No. 58,952
Term of patent 14 years
LOC (6) Cl. 06 - *04*
U.S. Cl. D6—479

388,268
TABLE LEG
Ron Hahn, 203 Manchester Pl., Greensboro, N.C. 27402
Filed Sep. 17, 1996, Ser. No. 59,915
Term of patent 14 years
LOC (6) Cl. 06 - *06*
U.S. Cl. D6—495

388,269
PAIR OF CHAIR ARMS
Romeo Tedesco, Weston, and Jocelyn Beaulieu, Newmarket, both of Canada, assignors to Global Upholstery Company, Downsview, Canada
Continuation-in-part of Ser. No. 497,657, Jun. 30, 1995, Pat. No. 5,577,804, and Ser. No. 557,260, Nov. 14, 1995. This application Feb. 29, 1996, Ser. No. 50,888
Term of patent 14 years
LOC (6) Cl. 06 - *06*
U.S. Cl. D6—501

388,270
CHAIR ARM
Craig H. Schultz, and Douglas A. Schroeder, both of Muscatine, Iowa, assignors to HON Industries Inc., Muscatine, Iowa
Filed Dec. 23, 1996, Ser. No. 64,158
Term of patent 14 years
LOC (6) Cl. 06 - *06*
U.S. Cl. D6—501

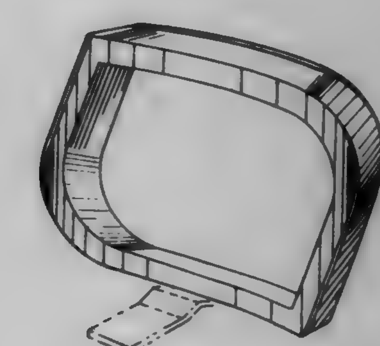

388,271
TOWEL RING
Glenn David Moore, Newfoundland, N.J., assignor to Melard Manufacturing Corp., Passaic, N.J.
Filed May 24, 1996, Ser. No. 54,882
Term of patent 14 years
LOC (6) Cl. 07 - *06*
U.S. Cl. D6—546

388,273
COMBINED TOWEL AND TOTE BAG
Ginger Propper, 385 5th Ave., Suite 1208, New York, N.Y. 10016
Filed Oct. 28, 1994, Ser. No. 30,427
Term of patent 14 years
LOC (6) Cl. 06 - *13*
U.S. Cl. D6—608

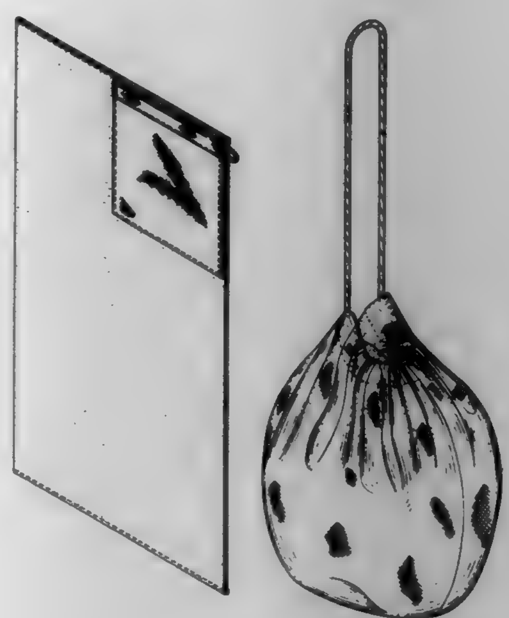

388,272
TOWEL BAR
Glenn David Moore, Newfoundland, N.J., assignor to Melard Manufacturing Corporation, Passaic, N.J.
Filed May 24, 1996, Ser. No. 54,881
Term of patent 14 years
LOC (6) Cl. 07 - *06*
U.S. Cl. D6—549

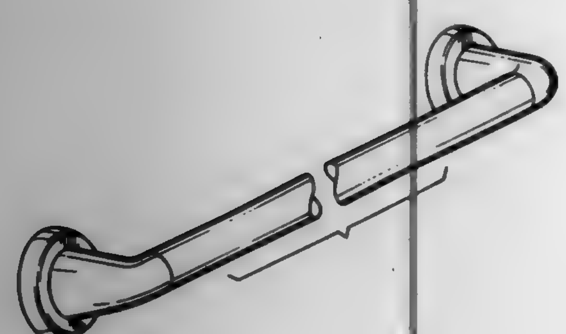

388,274
TEA BREWING CONTAINER
Chih-Hung Wang, No. 81-8, Liu-Kuai-Liao, Liu-Jia Village, An-Ding Hsiang, Tainan Hsien, Taiwan
Filed Oct. 8, 1996, Ser. No. 60,840
Term of patent 14 years
LOC (6) Cl. 07 - *01*
U.S. Cl. D7—317

388,275
COFFEE MAKER
Carsten Joergensen, Kriens, Switzerland, assignor to PI-Design AG, Triengen, Switzerland
Filed Aug. 1, 1996, Ser. No. 57,835
Claims priority, application Denmark, Feb. 6, 1996, 138/96
Term of patent 14 years
LOC (6) Cl. 07 - *01*
U.S. Cl. D7—319

388,277
BARBECUE GRILL
Timothy Alvin Scroggins, 1506½ Lone Oak, Houston, Tex. 77093
Filed May 9, 1996, Ser. No. 54,296
Term of patent 14 years
LOC (6) Cl. 07 - *02*
U.S. Cl. D7—332

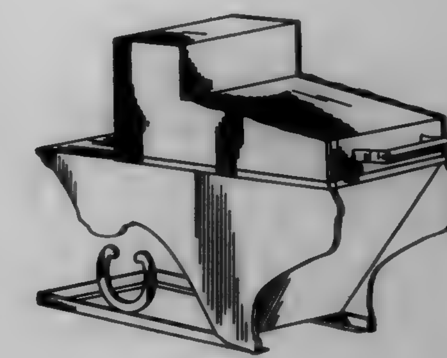

388,276
TOASTER
Anthony V. Cruz, Richmond, Va., assignor to Hamilton Beach/Proctor-Silex, Inc., Glen Allen, Va.
Filed Jul. 9, 1996, Ser. No. 56,831
Term of patent 14 years
LOC (6) Cl. 07 - *02*
U.S. Cl. D7—330

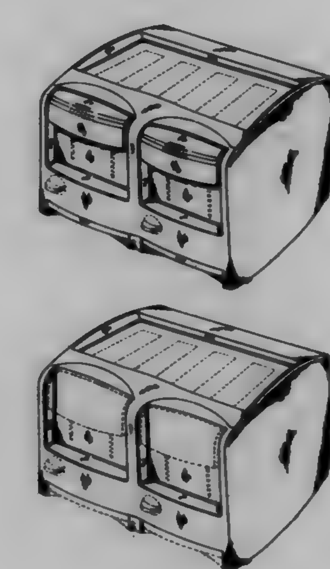

388,278
EXPANDABLE TRIVET
Robert T. Howitt, Leominster, Mass., assignor to M. Kamenstein, Inc., Elmsford, N.Y.
Filed Jul. 22, 1996, Ser. No. 57,302
Term of patent 14 years
LOC (6) Cl. 07 - *06*
U.S. Cl. D7—388

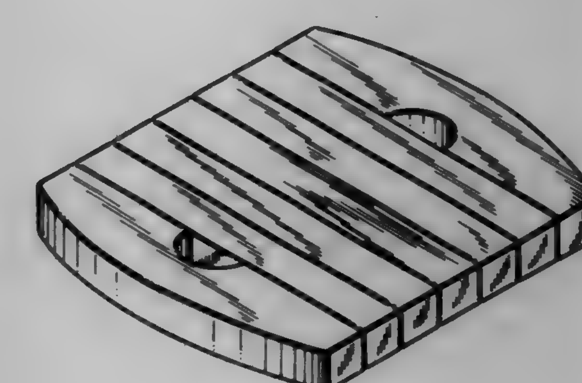

388,279
KITCHEN UTENSIL COVER
Florence Candianides, Annecy-le-Vieux, France, assignor to Tefal S.A., Rumilly, France
Filed Aug. 2, 1996, Ser. No. 57,883
Claims priority, application France, Feb. 2, 1996, 960662
Term of patent 14 years
LOC (6) Cl. 07 - *02*
U.S. Cl. D7—391

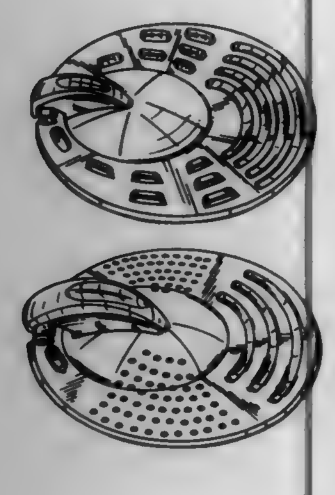

388,280
BATTERY POWERED SPARK IGNITER FOR A GAS GRILL
Daniel R. Kessler, Downers Grove, Ill., assignor to Harper-Wyman Company, Aurora, Ill.
Filed Jun. 14, 1996, Ser. No. 55,904
Term of patent 14 years
LOC (6) Cl. 23 - *03*
U.S. Cl. D7—416

388,281
GOLF MUG
Edgar F. Trombley, Grosse Point Farms, Mich., assignor to Punch Products USA, Inc., Kenilworth, N.J.
Filed Mar. 20, 1996, Ser. No. 52,451
Term of patent 14 years
LOC (6) Cl. 07 - *01*
U.S. Cl. D7—515

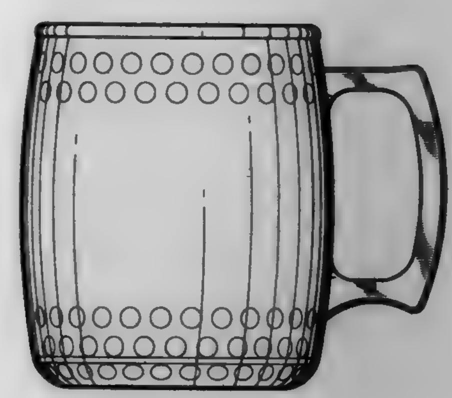

388,282
LID FOR ICE CHEST
Greg Floyd, and Kevin Rausch, both of Wooster, Ohio, assignors to Rubbermaid Specialty Products Inc., Wooster, Ohio
Filed Nov. 4, 1996, Ser. No. 62,393
Term of patent 14 years
LOC (6) Cl. 07 - *01*
U.S. Cl. D7—605

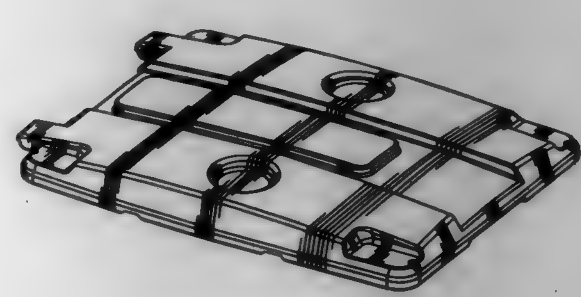

388,283
HOLDER FOR A DRINK CONTAINER
Jody J. Bencker, 1953 Arborcrest Rd., Moscow, Id. 83843
Filed Oct. 17, 1996, Ser. No. 61,182
Term of patent 14 years
LOC (6) Cl. 07 - *06*
U.S. Cl. D7—622

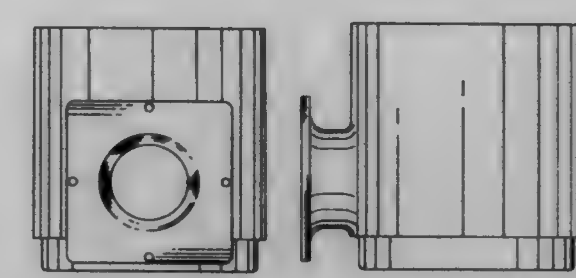

388,284
FLATWARE
Jacques Sitoleux, Mareil Marly, France, assignor to Orfevrerie Christofle, Paris, France
Filed Jul. 30, 1996, Ser. No. 57,687
Claims priority, application France, Mar. 12, 1996, 961489
Term of patent 14 years
LOC (6) Cl. 07 - *03*
U.S. Cl. D7—645

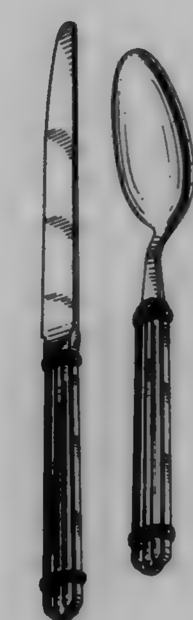

388,285
ELECTRIC FILLET KNIFE HANDLE
Amir M. Neshat, Jonesboro, Ark., assignor to The Scott Fetzer Company, Westlake, Ohio
Filed Aug. 5, 1996, Ser. No. 57,975
Term of patent 14 years
LOC (6) Cl. 07 - *01*
U.S. Cl. D7—646

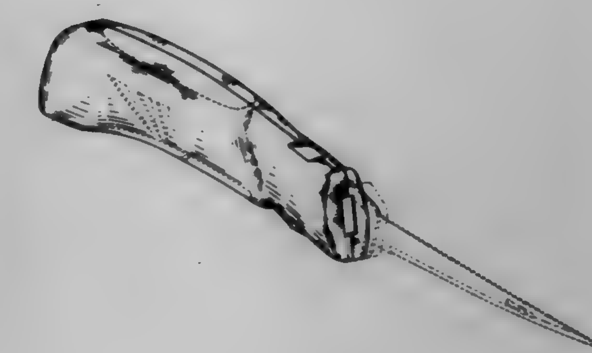

388,286
SCRAPER SPOON
Lizzie L. Fox, 1238 Yukon Dr., St. Louis, Mo. 63137
Filed Sep. 3, 1996, Ser. No. 59,119
Term of patent 14 years
LOC (6) Cl. 07 - *03*
U.S. Cl. D7—653

388,287
PUSH-UP BUTTER/MARGARINE STICK DISPENSER
Michael Malinosky, and Arlene M. Dick, both of 320 Seaview Ct., Unit 807, Marco Island, Fla. 34145
Filed Jun. 17, 1996, Ser. No. 5[illegible],929
Term of patent 14 years
LOC (6) Cl. 07 - *04*
U.S. Cl. D7—670

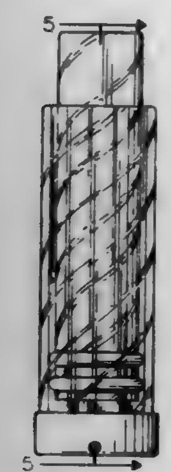

388,288
HOLDER AND SLICING GUIDE
Elam C. Frye, Jr., Longview, and Fred M. Gore, Carrollton, both of Tex., assignors to Frye International Corporation, Longview, Tex.
Filed Jul. 25, 1996, Ser. No. 57,[illegible]62
Term of patent 14 years
LOC (6) Cl. 07 - *04*
U.S. Cl. D7—673

388,289
SWIVEL BLADE SPATULA
George Denison, and Jeanette Denison, both of 15897 Vassar Ave., San Lorenzo, Calif. 94580
Filed Sep. 10, 1996, Ser. No. 59,406
Term of patent 14 years
LOC (6) Cl. 07 - *02*
U.S. Cl. D7—692

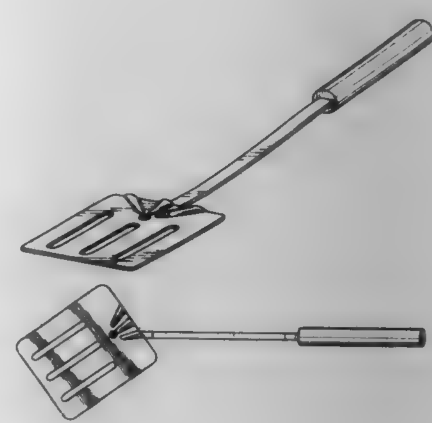

388,290
GARDEN EDGER
Thomas S. Riccobene, 532 Westgate La., NW., Albuquerque, N. Mex. 87107
Filed Sep. 4, 1996, Ser. No. 59,150
Term of patent 14 years
LOC (6) Cl. 08 - *01*
U.S. Cl. D8—1

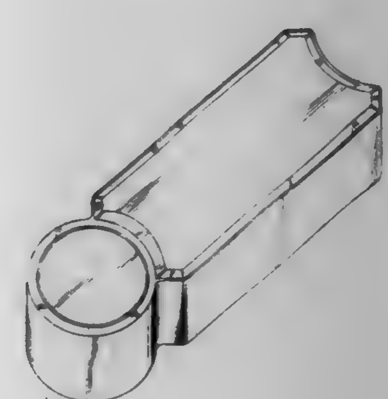

388,291
HEDGE TRIMMER
Paul Gildersleeve, Lutherville, Md., assignor to Black & Decker Inc., Newark, Del.
Division of Ser. No. 41,993, Jul. 28, 1995, Pat. No. Des. 376,740. This application Jul. 25. 1996, Ser. No. 57,670
Term of patent 14 years
LOC (6) Cl. 08 - *03*
U.S. Cl. D8—8

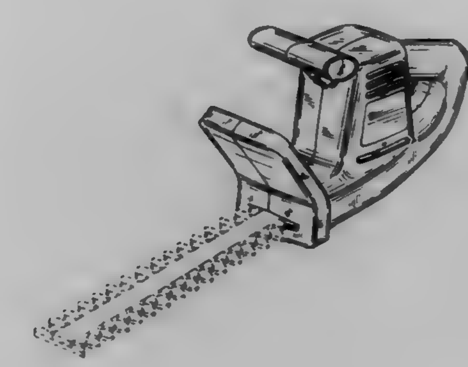

388,292
ROUND POINT SHOVEL WITH TOOTHED BLADE
Christopher T. Rich, Lancaster; Barry R. Albert, Dillsburg, and Mark W. Pursel, Grantville, all of Pa., assignors to True Temper Hardware Company, Camp Hill, Pa.
Filed Aug. 9, 1996, Ser. No. 58,221
Term of patent 14 years
LOC (6) Cl. 08 - *01*
U.S. Cl. D8—10

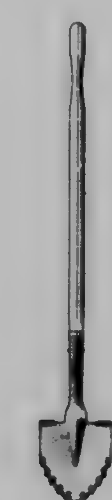

388,293
TOOL HANDLE WITH HAND GRIP
Stephen T. Haver, York, and Karen A. Richwine, Mechanicsburg, both of Pa., assignors to True Temper Hardware Company, Camp Hill, Pa.
Filed Aug. 9, 1996, Ser. No. 58,222
Term of patent 14 years
LOC (6) Cl. 08 - *01*
U.S. Cl. D8—10

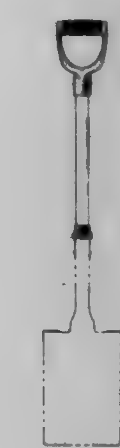

388,294
ADJUSTABLE WRENCH
Kwang-Moo Kim, 755-3, Kyomoon-Dong, Koori, Kyunggi-Do, Rep. of Korea
Filed Aug. 30, 1996, Ser. No. 59,016
Claims priority, application Rep. of Korea, May 18, 1996, 96-9785
Term of patent 14 years
LOC (6) Cl. 08 - *05*
U.S. Cl. D8—22

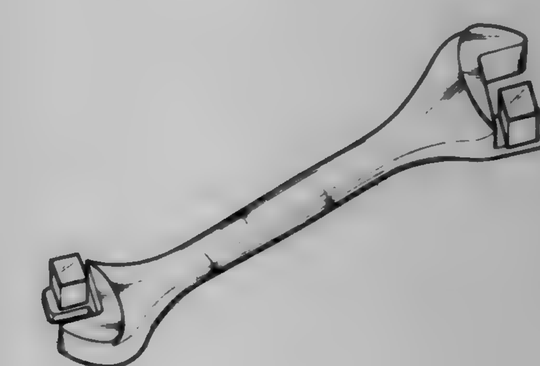

388,295
ADJUSTABLE WRENCH
Kwang-Moo Kim, 755-3, Kyomoon-Dong, Koori, Kyunggi-Do, Rep. of Korea
Filed Aug. 30, 1996, Ser. No. 59,017
Claims priority, application Rep. of Korea, May 6, 1996, 96-11644
Term of patent 14 years
LOC (6) Cl. 08 - *05*
U.S. Cl. D8—22

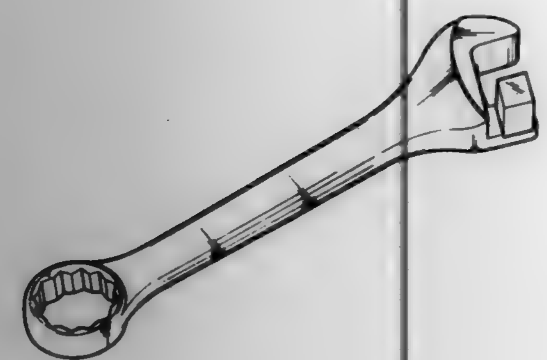

388,296
WRENCH
Chao Wei, No. 216, Tung Kuang Yuan Road, Taichung, Taiwan
Filed Oct. 4, 1996, Ser. No. 60,694
Term of patent 14 years
LOC (6) Cl. 08 - *05*
U.S. Cl. D8—28

388,297
HEAT GUN WITH ELECTRONIC CONTROL
Klaus Buttenbender, Friedrichshafen, Germany, assignor to Wagner Spray Tech Corporation, Minneapolis, Minn.
Filed Aug. 9, 1996, Ser. No. 58,166
Term of patent 14 years
LOC (6) Cl. 08 - *05*
U.S. Cl. D8—29.1

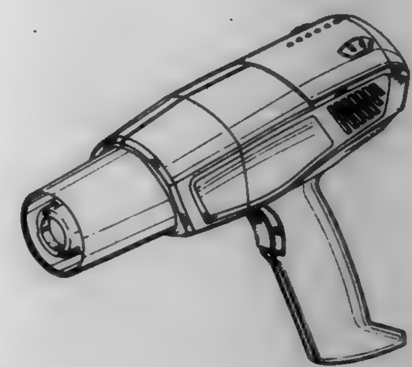

388,298
HEAT GUN
Jeffrey S. Jerdee, Brooklyn Center; Paul A. Pilosi, Minneapolis, and Richard C. Schoenert, Hopkins, all of Minn., assignors to Wagner Spray Tech Corporation, Minneapolis, Minn.
Filed Aug. 9, 1996, Ser. No. 58,233
Term of patent 14 years
LOC (6) Cl. 08 - *05*
U.S. Cl. D8—29.1

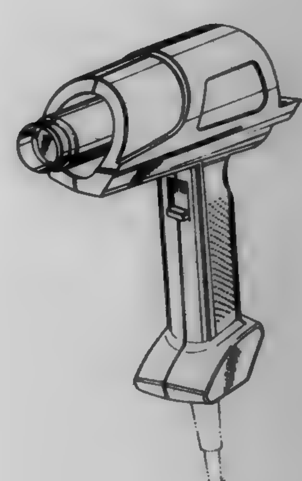

388,299
VIBRATING DARBY
Wesley Hacker, 610 Newport Center Dr., #100, Newport Beach, Calif. 92660
Filed Dec. 17, 1996, Ser. No. 63,836
Term of patent 14 years
LOC (6) Cl. 08 - *05*
U.S. Cl. D8—45

388,300
BRANCH SHEAR
Thomas Jeltsch, Markdorf, Germany, assignor to J. Wagner GmbH, Friedrichshafen, Germany
Filed Sep. 16, 1996, Ser. No. 59,787
Claims priority, application Germany, Apr. 27, 1996, M-96-03-907.8
Term of patent 14 years
LOC (6) Cl. 08 - *01*
U.S. Cl. D8—61

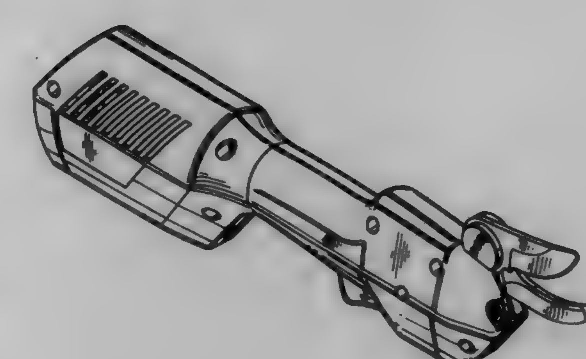

388,301
AIR TORQUE WRENCH
Todd Steel, 311 W. Main St., Enterprise, Oreg. 97828
Filed Aug. 22, 1994, Ser. No. 27,422
Term of patent 14 years
LOC (6) Cl. 08 - *05*
U.S. Cl. D8—68

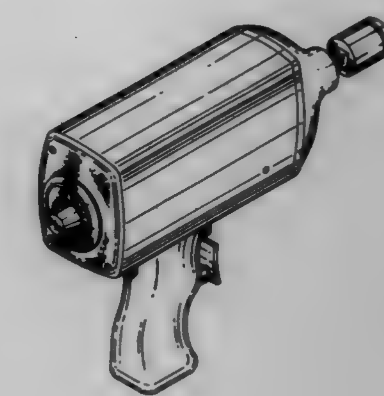

388,302
CONCRETE VIBRATOR BODY
Masahiko Inai, Anjo, Japan, assignor to Makita Corporation, Anjo, Japan
Filed Nov. 13, 1996, Ser. No. 62,334
Term of patent 14 years
LOC (6) Cl. 06 - *03*
U.S. Cl. D8—68

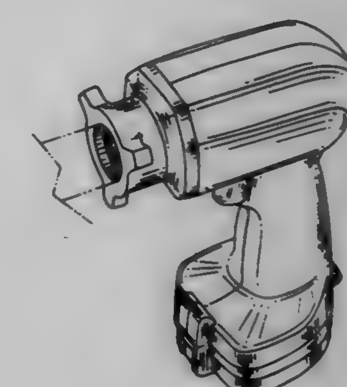

388,303
DIVING HAMMER
Martin Berggren, Stenungsund, Sweden, assignor to Aqua Cracker KB, Nkyoping, Sweden
Filed Feb. 13, 1996, Ser. No. 50,280
Term of patent 14 years
LOC (6) Cl. 08 - *02*
U.S. Cl. D8—81

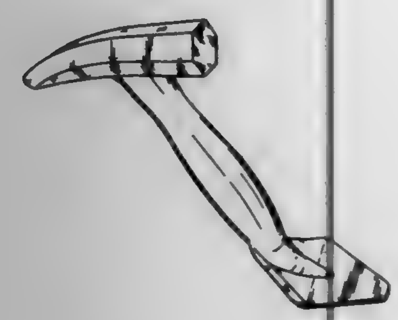

388,304
VERSATILE MANUAL SHARPENER
Daniel D. Friel, Greenville, Del., assignor to Edgecraft Co., Avondale, Pa.
Filed Jul. 9, 1996, Ser. No. 56,805
Term of patent 14 years
LOC (6) Cl. 08 - *05*
U.S. Cl. D8—93

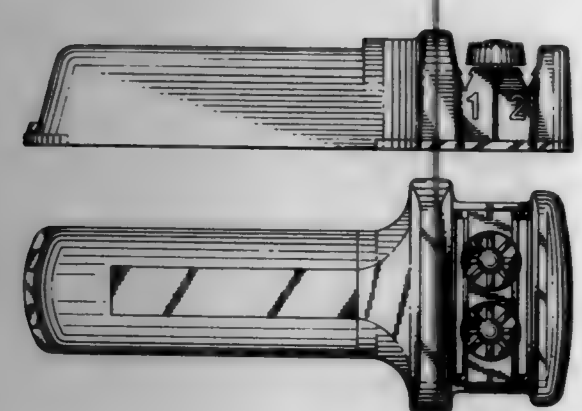

388,305
ROTARY CUTTER
William J. Schulz, Mosinee, and Robert W. Cornell, Schofield, both of Wis., assignors to Fiskars Inc., Madison, Wis.
Filed Dec. 16, 1996, Ser. No. 63,805
Term of patent 14 years
LOC (6) Cl. 08 - *03*
U.S. Cl. D8—98

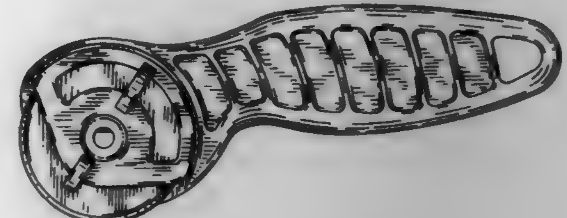

388,306
COMBINATION LETTER OPENER AND STAPLE REMOVER
Alan Vaught, 7422 Chapman Ave., Garden Grove, Calif. 92841
Filed Feb. 14, 1997, Ser. No. 66,566
Term of patent 14 years
LOC (6) Cl. 08 - *03*
U.S. Cl. D8—104

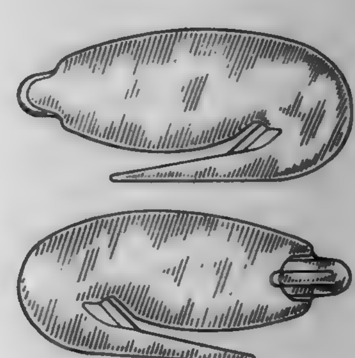

388,307
TOOL HANDLE
Donald Gringer, New York, N.Y., assignor to Allway Tools, Inc., Bronx, N.Y.
Filed May 7, 1996, Ser. No. 54,114
Term of patent 14 years
LOC (6) Cl. 08 - *05*
U.S. Cl. D8—107

388,308
ELECTRONIC COMBINATION LOCK HOUSING
Walter Reed Evans; Edward Ellett Pollard, both of Lexington; Raymond Herman Reichenbach, Salvisa, and Larry Joe Rice, Nicholasville, all of Ky., assignors to Mas-Hamilton Group, Lexington, Ky.
Filed Dec. 20, 1996, Ser. No. 63,997
Term of patent 14 years
LOC (6) Cl. 08 - *07*
U.S. Cl. D8—330

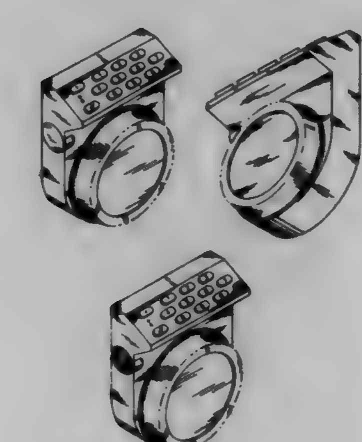

388,309
ELECTRONIC COMBINATION LOCK HOUSING
James D. Hamilton; Kenneth Harold Mimlitch; William Thomas Muetterties, all of Lexington, and Raymond Herman Reichenbach, Salvisa, all of Ky., assignors to Mas-Hamilton Group, Lexington, Ky.
Filed Dec. 20, 1996, Ser. No. 64,045
Term of patent 14 years
LOC (6) Cl. 08 - *07*
U.S. Cl. D8—330

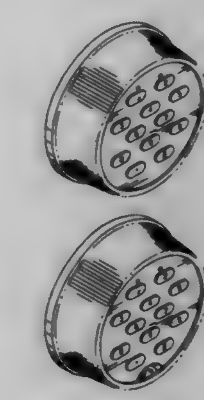

388,310
RETRACTABLE WIRE COMBINATION LOCK WITH ALARMING DEVICE
Chong-Kuan Ling, C/O Simox Co., Ltd. P.O. Box 96-156, Taipei, Taiwan
Filed Nov. 1, 1996, Ser. No. 61,894
Term of patent 14 years
LOC (6) Cl. 08 - *07*
U.S. Cl. D8—332

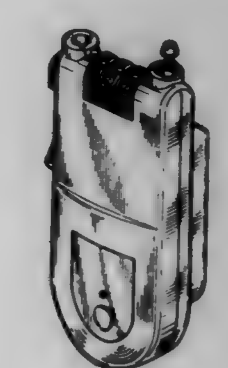

388,311
FACEPLATE
Craig Scherer, Wilmette, and Michael Thuma, Des Plaines, both of Ill., assignors to Panduit Corp., Tinley Park, Ill.
Division of Ser. No. 24,722, Jun. 20, 1994, Pat. No. Des. 375,249. This application Oct. 28, 1996, Ser. No. 62,973
Term of patent 14 years
LOC (6) Cl. 11 - *05*
U.S. Cl. D8—353

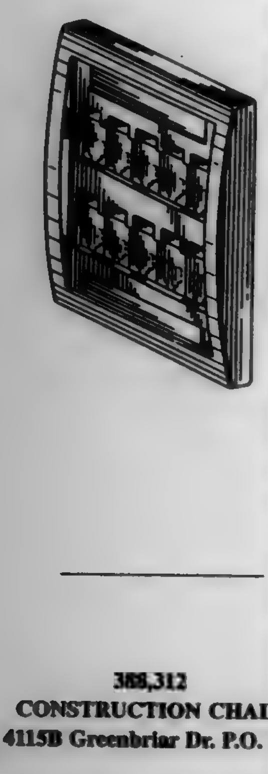

388,312
CONSTRUCTION CHAIR
Felix L. Sorkin, 4115B Greenbriar Dr. P.O. Box 1503, Stafford, Tex. 77477
Filed May 28, 1996, Ser. No. 54,979
The portion of the term of this patent subsequent to Sep. 17, 2010, has been disclaimed.
Term of patent 14 years
LOC (6) Cl. 08 - *05*
U.S. Cl. D8—354

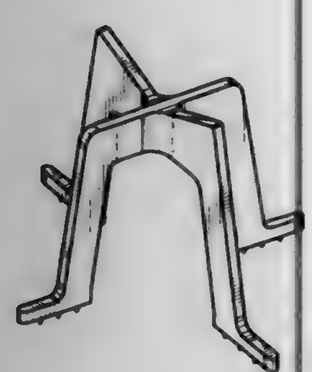

388,313
OFFICE PARTITION SUPPORT
Douglas D. Benner, Grand Rapids, and Joylene M. Battey, Kentwood, both of Mich., assignors to Steelcase, Inc., Grand Rapids, Mich.
Filed Jun. 7, 1996, Ser. No. 55,583
Term of patent 14 years
LOC (6) Cl. 08 - *05*
U.S. Cl. D8—354

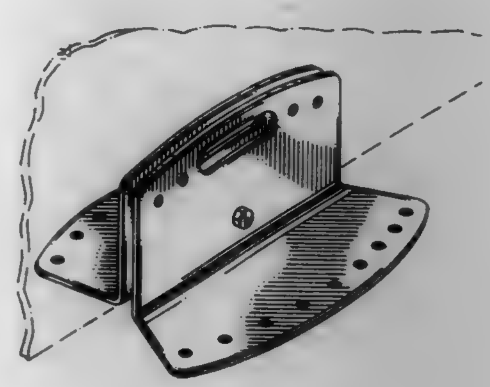

388,314
PORTION OF A SHOE OUTSOLE
Christian J. Tresser, Portland, Oreg., assignor to Nike, Inc., Beaverton, Oreg.
Filed Nov. 25, 1996, Ser. No. 62,799
Term of patent 14 years
LOC (6) Cl. 02 - *04*
U.S. Cl. D2—954

388,315
COMBINED CORD HOLDER AND CUTTER
Linda Friedman, Staten Island, N.Y., assignor to J. R. Duffy Inc., Great Neck, N.Y.
Filed Aug. 20, 1996, Ser. No. 58,680
Term of patent 14 years
LOC (6) Cl. 08 - *05*
U.S. Cl. D8—360.1

388,316
PANEL FASTENER
William P. McDonough, Birdsboro, and Harold D. Ross, Chalfont, both of Pa., assignors to Penn Engineering & Manufacturing Corp., Danboro, Pa.
Filed Jan. 22, 1996, Ser. No. 49,258
Term of patent 14 years
LOC (6) Cl. 08 - *08*
U.S. Cl. D8—387

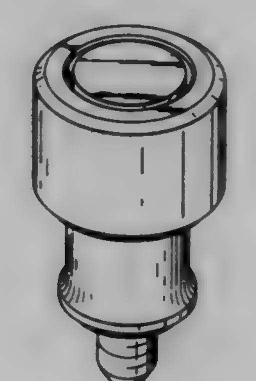

388,317
CORNER PROTECTOR
Michael J. Brandes, Jasper, Ind., assignor to The Servants, Inc., Jasper, Ind.
Filed Jul. 30, 1996, Ser. No. 57,701
Term of patent 14 years
LOC (6) Cl. 08 - *09*
U.S. Cl. D8—403

388,318
DECORATIVE VENT PATTERN FOR CIRCULAR SAW BLADES
Nicholas E. Achterberg, Phoenix, and David A. Williams, Bel Air, both of Md., assignors to Black & Decker Inc., Newark, Del.
Filed Mar. 15, 1996, Ser. No. 51,682
Term of patent 14 years
LOC (6) Cl. 08 - *99*
U.S. Cl. D8—499

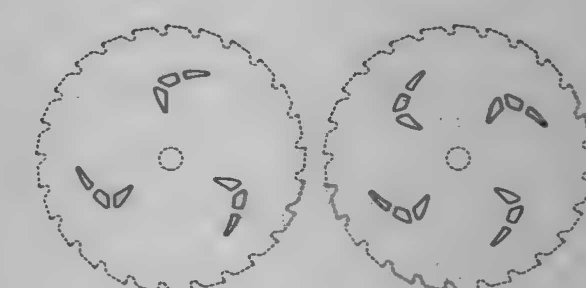

388,319
CONTAINER
John David Lamb, Wiltshire, United Kingdom, assignor to Chesebrough-Pond's USA Co., Division of Conopco, Inc., Greenwich, Conn.
Filed Sep. 12, 1996, Ser. No. 59,506
Claims priority, application United Kingdom, Apr. 2, 1996, 2055321
Term of patent 14 years
LOC (6) Cl. 09 - *01*
U.S. Cl. D9—300

388,320
CONTAINER WITH CAP
John David Lamb, Wiltshire, United Kingdom, assignor to Chesebrough-Pond's USA Co., Division of Conopco, Inc., Greenwich, Conn.
Filed Sep. 12, 1996, Ser. No. 59,508
Claims priority, application United Kingdom, Apr. 2, 1996, 2055341
Term of patent 14 years
LOC (6) Cl. 09 - *01*
U.S. Cl. D9—300

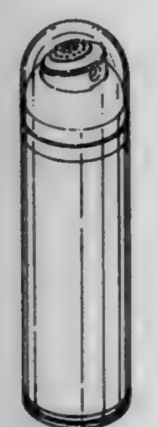

388,321
COMBINED PERFUME BOTTLE AND CLOSURE
Khaled Chahed, Paris, France, assignor to Parfums Jean Jacques Vivier, Saint Maur, France
Filed Dec. 5, 1996, Ser. No. 63,341
Claims priority, application France, Jun. 10, 1996, 963407
Term of patent 14 years
LOC (6) Cl. 09 - *01*
U.S. Cl. D9—322

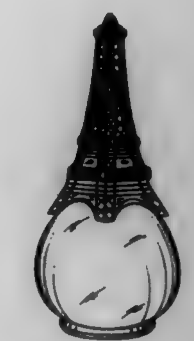

388,322
CONFECTIONARY HOLDER
Michael G. Hoeting, and Sean T. Mullaney, both of Cincinnati, Ohio, assignors to Captoys Inc., Bedford Hts, Ohio
Filed Jul. 17, 1996, Ser. No. 57,137
Term of patent 14 years
LOC (6) Cl. 09 - *07*
U.S. Cl. D9—415

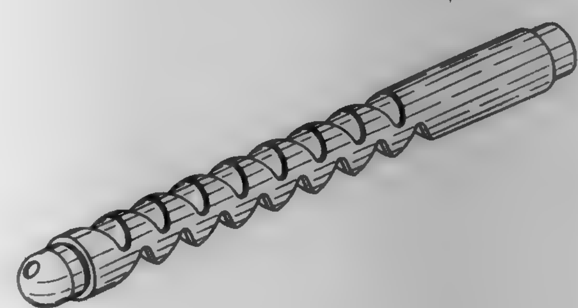

388,323
COMBINED PACKAGE AND MOLD FOR FISHING BAIT
Ronald Kliegl, Spirit Lake, Iowa, assignor to Berkley, Inc., Spirit Lake, Iowa
Filed Aug. 13, 1996, Ser. No. 58,631
Term of patent 14 years
LOC (6) Cl. 09 - *07*
U.S. Cl. D9—418

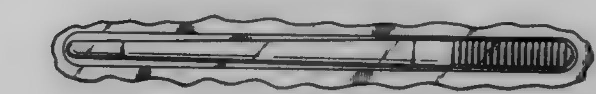

388,324
PACKAGING FOR FOOD
Anna Bonnard, Paris, France, assignor to Bongrain S.A., Guyancourt, France
Filed Nov. 22, 1996, Ser. No. 63,028
Claims priority, application France, May 23, 1996, 963132
Term of patent 14 years
LOC (6) Cl. 09 - *07*
U.S. Cl. D9—424

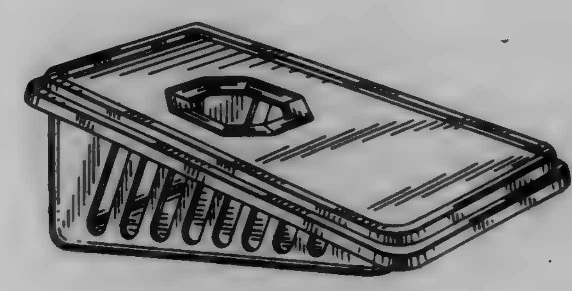

388,325
CONTAINER FOR FOOD
Edward Tucker, Romeoville, Ill.; George Lueken, Fort Wayne, Ind.; Luke Gross, Churubusco, Ind.; Mark Craz, Fort Wayne, Ind., and Jack F. Melvan, Oak Forest, Ill., assignors to First Brands Corporation, Danbury, Conn.
Filed May 20, 1996, Ser. No. 54,729
Term of patent 14 years
LOC (6) Cl. 09 - *07*
U.S. Cl. D9—425

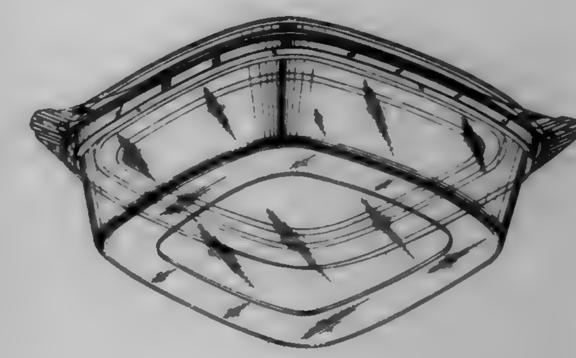

388,326
HAND-HELD MULTIPLE BAG CARRIER FOR SHOPPING BAGS HAVING HANDLES
Edward G. Gurry, and Allison Brown, both of 31 Royal Crest Dr. #7, Nashua, N.H. 03060
Filed Oct. 23, 1996, Ser. No. 61,385
Term of patent 14 years
LOC (6) Cl. 09 - *07*
U.S. Cl. D9—434

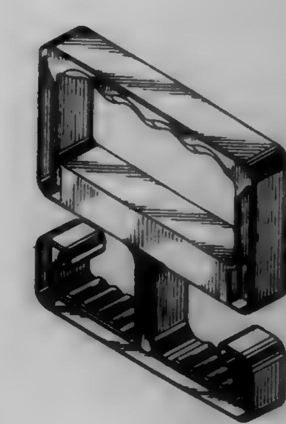

388,327
COMBINED AERATING LID AND COVER UNIT FOR A STANDARD WIDE MOUTH JAR
Judith L. Radosevich, 11605 Renton Ave. South, Seattle, Wash. 11605
Filed Aug. 5, 1996, Ser. No. 57,950
Term of patent 14 years
LOC (6) Cl. 09 - *07*
U.S. Cl. D9—436

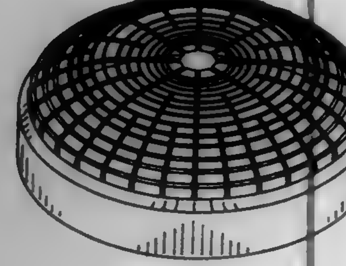

388,328
TIERED OIL BOTTLE NECK STABILIZER
Virgil Harris, P.O. Box 124, Point Marion, Pa. 15474
Filed Nov. 1, 1996, Ser. No. 61,874
Term of patent 14 years
LOC (6) Cl. 09 - *07*
U.S. Cl. D9—447

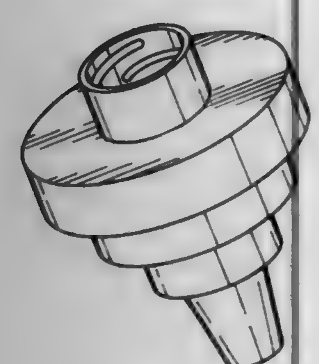

388,329
TENNIS BALL CONTAINER
Stephen A. Bright, 852 Scholz Dr., Vandalia, Ohio 45377, and Linton H. Erdmann, 102 Nantucket Landing, Dayton, Ohio 45458
Filed Aug. 1, 1996, Ser. No. 57,840
Term of patent 14 years
LOC (6) Cl. 09 - *07*
U.S. Cl. D9—503

388,330
BOTTLE
Gregory A. Zimmer, Cincinnati, Ohio, assignor to The Procter & Gamble Company, Cincinnati, Ohio
Filed Aug. 5, 1996, Ser. No. 57,970
Term of patent 14 years
LOC (6) Cl. 09 - *01*
U.S. Cl. D9—543

388,331
BOTTLE
Linda Haner, Sparta, N.J., and Martha Davis, New York, N.Y., assignors to Warner-Lambert Company, Morris Plains, N.J.
Filed May 7, 1993, Ser. No. 8,026
Term of patent 14 years
LOC (6) Cl. 09 - *01*
U.S. Cl. D9—571

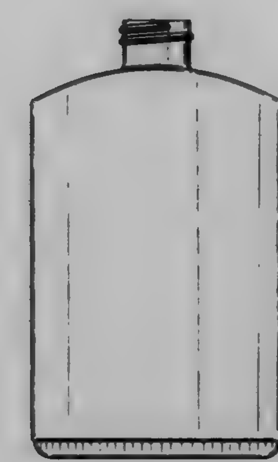

388,332
COMBINED WATCH AND BRACELET
Alain-Dominique Perrin, Rueil Malmaison, and Jacques Diltoer, Villeneuve-la-Garenne, both of France, assignors to Cartier Int'l B.V., Amsterdam-C, Netherlands
Filed Jan. 3, 1996, Ser. No. 50,721
Claims priority, application France, Jul. 4, 1995, 953689
Term of patent 14 years
LOC (6) Cl. 10 - *02*
U.S. Cl. D10—32

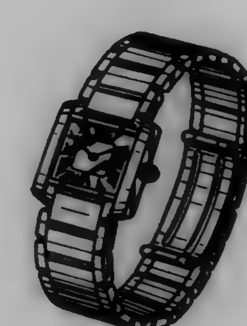

388,333
WATCH BRACELET
Severin S. Wunderman, Irvine, Calif., assignor to Severin Montres AG (Severin Montres SA) Severin Montres, Ltd.), Lengnau, Switzerland
Filed Mar. 25, 1996, Ser. No. 52,158
Claims priority, application Switzerland, Sep. 25, 1995, DMA/003072
Term of patent 14 years
LOC (6) Cl. 10 - *02*
U.S. Cl. D10—32

388,334
WRISTWATCH
René Baumann, Erlenbach, Switzerland, assignor to Desco Von Schulthess AG, Zurich, Switzerland
Filed Jul. 10, 1996, Ser. No. 56,844
Claims priority, application WIPO, Mar. 15, 1996, DMA/003252
Term of patent 14 years
LOC (6) Cl. 10 - *02*
U.S. Cl. D10—32

388,335
WRISTWATCH
Barbara Giardiello, Naples, Italy, assignor to Artime SA, Neuchatel, Switzerland
Filed Jul. 25, 1996, Ser. No. 57,428
Claims priority, application WIPO, Jan. 25, 1996, DMA/003207
Term of patent 14 years
LOC (6) Cl. 10 - *02*
U.S. Cl. D10—32

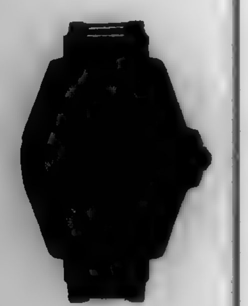

388,336
WRISTWATCH
Giovanni Bulgari, Rome, Italy, assignor to Gianni Bulgari, S.p.A., Rome, Italy
Filed Oct. 17, 1996, Ser. No. 61,171
Claims priority, application WIPO, Apr. 17, 1996, DMA003294
Term of patent 14 years
LOC (6) Cl. 10 - *02*
U.S. Cl. D10—32

388,337
GOLF WRIST WATCH
Sanford S. Yudovin, 1770 Stuart St., Cambria, Calif. 93428
Filed Feb. 7, 1997, Ser. No. 66,147
Term of patent 14 years
LOC (6) Cl. 10 - *02*
U.S. Cl. D10—33

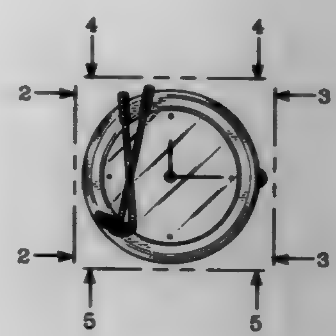

388,338
WATCH
Barbara Giardiello, Naples, Italy, assignor to Artime SA, Neuchatel, Switzerland
Filed Jul. 25, 1996, Ser. No. 57,434
Claims priority, application WIPO, Jan. 25, 1996, DMA/003207
Term of patent 14 years
LOC (6) Cl. 10 - *02*
U.S. Cl. D10—39

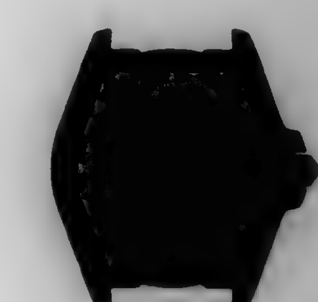

388,339
WATCH
Severin S. Wunderman, South Laguna, Calif., assignor to Severin Montres AG (Severin Montres SA) (Severin Montres Ltd), Lengnau, Switzerland
Filed Aug. 23, 1996, Ser. No. 58,791
Claims priority, application WIPO, Feb. 23, 1996, DMA/003237
Term of patent 14 years
LOC (6) Cl. 10 - *02*
U.S. Cl. D10—39

388,340
FRONT FACE FOR A METRONOME
Steve Ridinger, 609 Del Dios, San Clemente, Calif. 92672
Filed Feb. 14, 1997, Ser. No. 66,564
Term of patent 14 years
LOC (6) Cl. 10 - *03*
U.S. Cl. D10—43

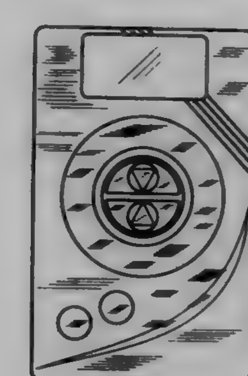

388,341
GOLFER'S GUIDE
Leoncio D. Perez, 1708 W. 24th St., Los Angeles, Calif. 90018
Filed Oct. 11, 1996, Ser. No. 62,952
Term of patent 14 years
LOC (6) Cl. 21 - *01*
U.S. Cl. D10—46.1

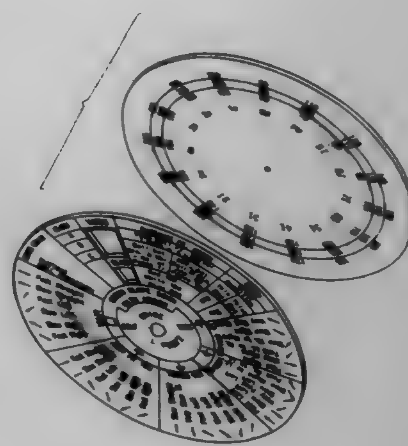

388,342
COMBINED SCOREBOARD AND INTERCHANGEABLE INDICIA
B. Wayne Hughins, 564 Eastbrook Dr., Birmingham, Ala. 35215; D. C. Thrasher, P.O. Box 156, Chelsea, Ala. 35043, and C. Mark Todd, 729 29th St. S., Birmingham, Ala. 35233
Filed Nov. 23, 1992, Ser. No. 1,803
Term of patent 14 years
LOC (6) Cl. 21 - *01*
U.S. Cl. D10—46.1

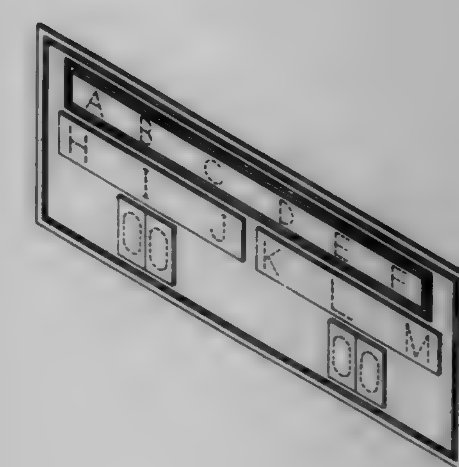

388,343
EAR-INSERTED-TYPE CLINICAL THERMOMETER
Takanobu Yamauchi, Kyoto; Yutaka Kobayashi, Osaka, both of Japan, and Steven M. Montgomery, Valley Village, Calif., assignors to Omron Corporation, Kyoto, Japan
Filed Oct. 18, 1996, Ser. No. 61,231
Claims priority, application Japan, Apr. 22, 1996, 8-11843
Term of patent 14 years
LOC (6) Cl. 10 - *04*
U.S. Cl. D10—57

388,344
LEVEL
Glenn Johansson, Telefonvägen 4, Lanna, S-330 10 Bredaryd, Sweden
Filed Jul. 31, 1996, Ser. No. 57,760
Claims priority, application Germany, Feb. 1, 1996, M 96 00 950.6
Term of patent 14 years
LOC (6) Cl. 10 - *04*
U.S. Cl. D10—69

388,345
FISHING RULER
Thomas P. Burns, 1421 W. 143rd St., #313, Burnsville, Minn. 55306
Filed Feb. 7, 1997, Ser. No. 66,150
Term of patent 14 years
LOC (6) Cl. 10 - *04*
U.S. Cl. D10—71

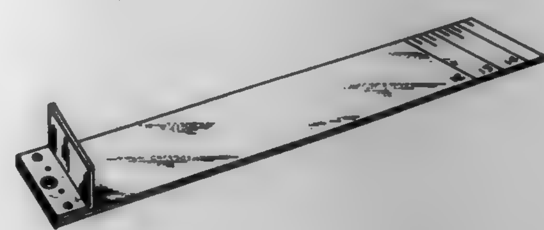

388,346
CLAMP-ON CURRENT PROBE
Daniel Arnoux, and Axel Arnoux, both of Paris, France, assignors to Societe Chauvin Arnoux, Paris, France
Filed Mar. 5, 1996, Ser. No. 51,096
The portion of the term of this patent subsequent to Sep. 23, 2011, has been disclaimed.
Term of patent 14 years
LOC (6) Cl. 10 - *04*
U.S. Cl. D10—79

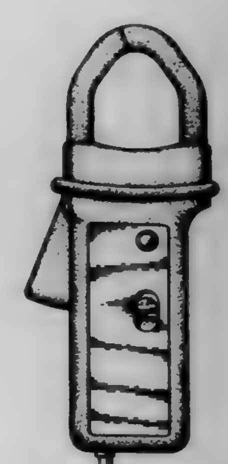

388,347
SCALE FOR PERSONS
Wolfgang Fabian, Mannheim, Germany, assignor to Soehnle-Waagen GmbH & Co., Murrhardt, Germany
Filed Jul. 31, 1996, Ser. No. 57,757
Claims priority, application Hague Agreement, Feb. 2, 1996, DM/035 418
Term of patent 14 years
LOC (6) Cl. 10 - *04*
U.S. Cl. D10—92

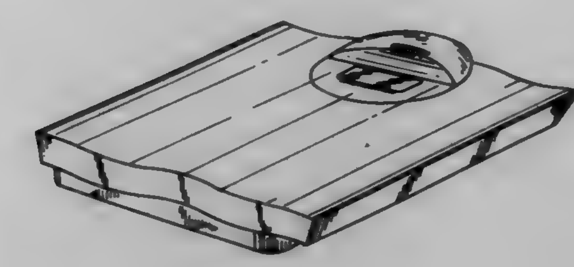

388,348
SPEEDOMETER-TACHOGRAPH
Ulrich Kraus, Villingen-Schwenningen, Germany, assignor to VDO Adolf Schindling AG, Frankfurt, Germany
Filed Sep. 16, 1996, Ser. No. 59,771
Claims priority, application Germany, Mar. 15, 1996, M 96 02 369.4
Term of patent 14 years
LOC (6) Cl. 10 - *04*
U.S. Cl. D10—98

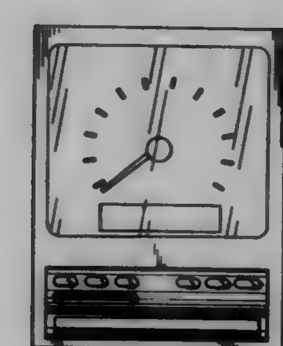

388,349
REMOTE CONTROL TRANSMITTER
Ramin Youabian, 445 Martin La., Beverly Hills, Calif. 90210
Filed Dec. 3, 1996, Ser. No. 63,262
Term of patent 14 years
LOC (6) Cl. 10 - *05*
U.S. Cl. D10—104

388,350
BOTTOM SURFACE OF A SHOE OUTSOLE
Wilson W. Smith, Beaverton, Oreg., assignor to Nike, Inc., Beaverton, Oreg.
Filed Dec. 7, 1995, Ser. No. 47,580
Term of patent 14 years
LOC (6) Cl. 02 - *04*
U.S. Cl. D2—953

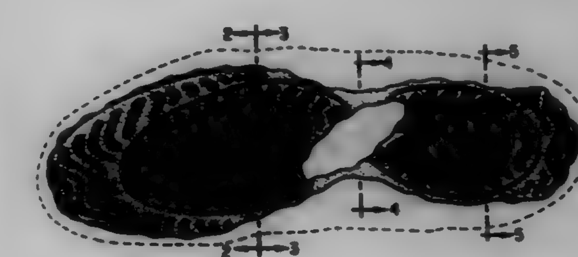

388,351
SMOKE DETECTOR

Timothy C. Repp, New Hartford, Conn.; Wayne Nelson, Maynard, Mass.; Lawrence G. Stanley, Templeton, Mass., and Charles Winterble, Princeton, Mass., assignors to Simplex Time Recorder Company, Gardner, Mass.

Division of Ser. No. 48,281, Dec. 22, 1995. This application Jan. 30, 1997, Ser. No. 65,582

Term of patent 14 years
LOC (6) Cl. 10 - *05*

U.S. Cl. D10—106

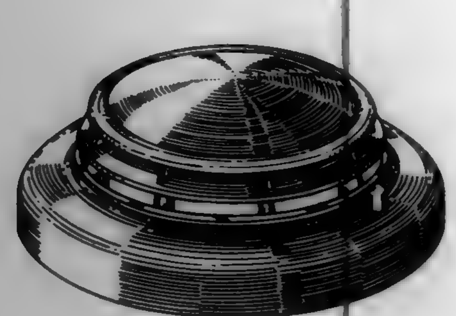

388,352
SMOKE DETECTOR

Timothy C. Repp, New Hartford, Conn.; Wayne Nelson, Maynard, Mass.; Lawrence G. Stanley, Templeton, Mass., and Charles Winterble, Princeton, Mass., assignors to Simplex Time Recorder Company, Gardner, Mass.

Division of Ser. No. 48,281, Dec. 22, 1995. This application Jan. 30, 1997, Ser. No. 65,600

Term of patent 14 years
LOC (6) Cl. 10 - *05*

U.S. Cl. D10—106

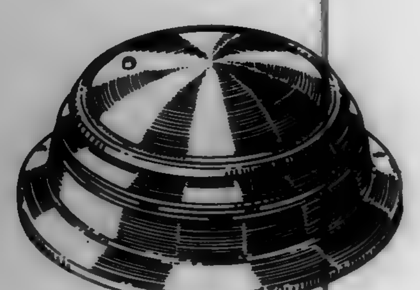

388,353
REFLECTIVE PAVEMENT MARKER

Brian Desborough, Yroba Linda, and Ray Garrobo, Alta Loma, both of Calif., assignors to Carl de la Torre, Los Angeles, Calif.

Filed Oct. 10, 1996, Ser. No. 60,893
Term of patent 14 years
LOC (6) Cl. 10 - *05*

U.S. Cl. D10—113

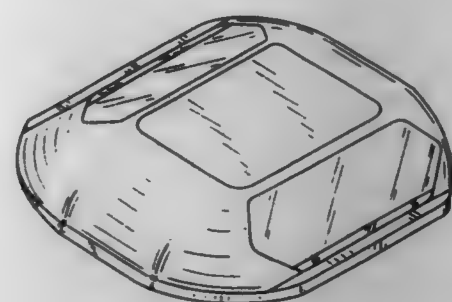

388,354
WATCH-BRACELET

Barbara Giardiello, Naples, Italy, assignor to Artime S.A., Neuchatel, Switzerland

Filed Jun. 19, 1996, Ser. No. 55,998

Claims priority, application WIPO, Dec. 22, 1995, DMA/003186

Term of patent 14 years
LOC (6) Cl. 11 - *01*

U.S. Cl. D11—21

388,355
PORTION OF A SHOE OUTSOLE

Wilson W. Smith, III, Beaverton, Oreg., assignor to Nike, Inc., Beaverton, Oreg.

Filed Nov. 18, 1996, Ser. No. 62,516
Term of patent 14 years
LOC (6) Cl. 02 - *04*

U.S. Cl. D2—960

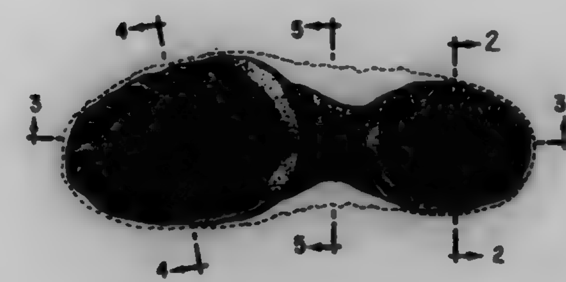

388,356
JEWELRY CLASP EXTENDER

James E. Lucas, II, and Regina L. Lucas, both of 1318 N. Madras Hwy., Prineville, Oreg. 97754

Filed Apr. 26, 1996, Ser. No. 53,053
Term of patent 14 years
LOC (6) Cl. 11 - *01*

U.S. Cl. D11—86

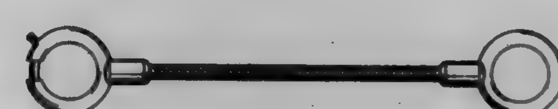

388,357
EARRING CLIP

Robert A. Montaquila, Cranston, R.I., assignor to Aro-Sac, Inc., North Providence, R.I.

Filed Jun. 7, 1996, Ser. No. 55,612

The portion of the term of this patent subsequent to Nov. 11, 2011, has been disclaimed.

Term of patent 14 years
LOC (6) Cl. 11 - *01*

U.S. Cl. D11—88

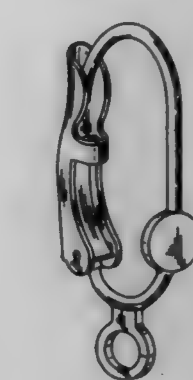

388,358
STACKING SKELETON HEADS

Donald Shaw, 170 Commander Blvd., Agincourt, Ontario, Canada, M1S 3C8

Filed Sep. 25, 1996, Ser. No. 60,241
Term of patent 14 years
LOC (6) Cl. 11 - *05*

U.S. Cl. D11—125

388,359
VAMPIRE BAT PUMPKIN LAWN ORNAMENT
Donald Shaw, 170 Commander Blvd., Agincourt, Ontario M1S 3C8, Canada
Filed Sep. 25, 1996, Ser. No. 60,245
Term of patent 14 years
LOC (6) Cl. 11 - *05*
U.S. Cl. D11—125

388,360
PUMPKIN HEAD FIGURE
Donald Shaw, 170 Commander Blvd., Agincourt, Ontario, Canada, M1S 3C8
Filed Jan. 2, 1997, Ser. No. 64,479
Term of patent 14 years
LOC (6) Cl. 11 - *05*
U.S. Cl. D11—125

388,361
FLORAL ARRANGEMENT CRAFT KIT
Susan L. Krieger, Minneapolis, Minn., assignor to Koehler & Dramm, Inc., Minneapolis, Minn.
Filed May 15, 1995, Ser. No. 38,812
Term of patent 14 years
LOC (6) Cl. 11 - *99*
U.S. Cl. D11—131

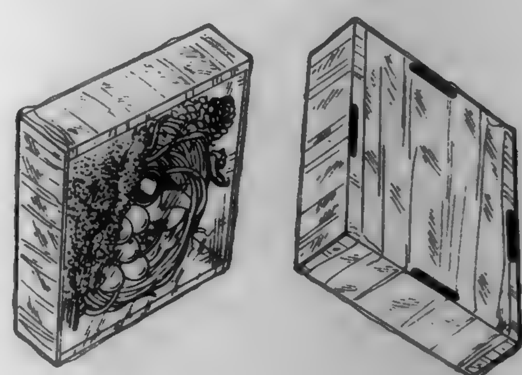

388,362
PERSONAL ELEVATED AGRICULTURAL BED
Mark E. Tuttle, 703 W. 13th Street P.O. Box 2664, Muncie, Ind. 47307
Filed May 3, 1996, Ser. No. 55,821
Term of patent 14 years
LOC (6) Cl. 11 - *02*
U.S. Cl. D11—155

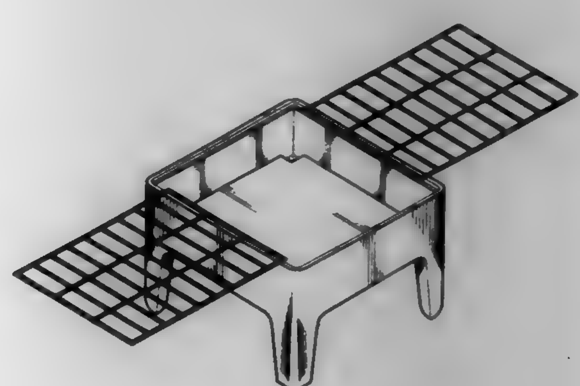

388,363
FLOWER POT COVER
Donald E. Weder, and Joseph G. Straeter, both of Highland, Ill., assignors to Southpac Trust International, Inc.
Division of Ser. No. 3,580, Jan. 8, 1993, Pat. No. Des. 371,320, which is a continuation-in-part of Ser. No. 807,678, Dec. 16, 1991, Pat. No. Des. 361,734, which is a continuation-in-part of Ser. No. 710,272, Jun. 4, 1991, Pat. No. Des. 365,302, which is a continuation-in-part of Ser. No. 617,454, Nov. 21, 1990, abandoned, said Ser. No. 710,272is a continuation-in-part of Ser. No. 411,249, Sep. 22, 1989, Pat. No. Des. 358,113, Ser. No. 411,247, Sep. 22, 1989, abandoned, and Ser. No. 411,245, Sep. 22, 1989, abandoned. This application May 7, 1996, Ser. No. 55,831
The portion of the term of this patent subsequent to Nov. 14, 2009, has been disclaimed.
Term of patent 14 years
LOC (6) Cl. 11 - *02*
U.S. Cl. D11—164

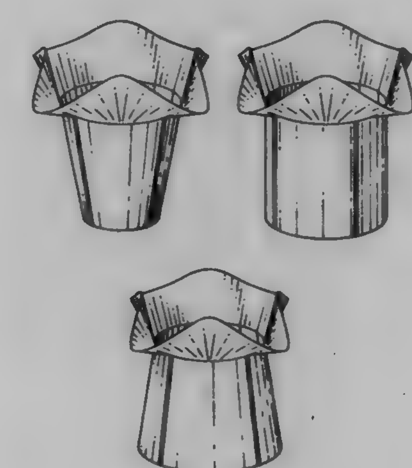

388,364
PORTION OF A SHOE UPPER
Ricardo Vestuti, Portland, Oreg., assignor to Nike, Inc., Beaverton, Oreg.
Filed Mar. 7, 1997, Ser. No. 67,704
Term of patent 14 years
LOC (6) Cl. 02 - *99*
U.S. Cl. D2—972

388,365
AUTOMOBILE
Royden Axe, Sarasota, Fla., and Richard David Hamblin, Solihull, United Kingdom, assignors to Rolls-Royce Motor Cars Limited, Cheshire, England
Filed Jan. 23, 1996, Ser. No. 49,342
Claims priority, application United Kingdom, Jul. 28, 1995, 2049080
Term of patent 14 years
LOC (6) Cl. 12 - *08*
U.S. Cl. D12—92

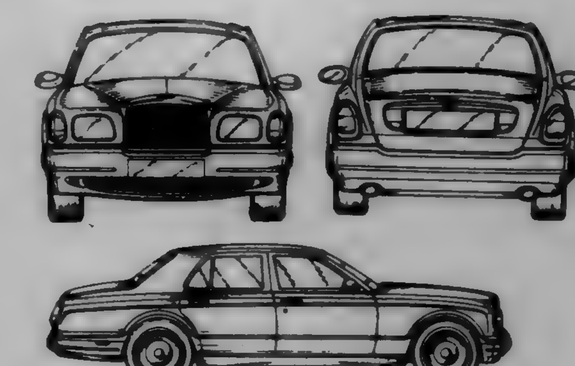

388,366
MOTORCYCLE
Toshiyuki Nishino, Hamamatsu, Japan, assignor to Suzuki Kabushiki Kaisha, Shizuoka-ken, Japan
Filed Sep. 6, 1996, Ser. No. 59,298
Claims priority, application Japan, Jul. 19, 1996, 8-821780
Term of patent 14 years
LOC (6) Cl. 12 - *11*
U.S. Cl. D12—110

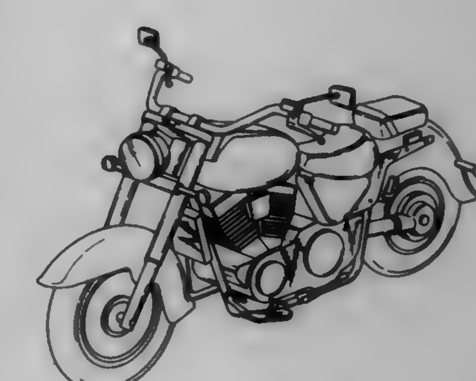

388,367
SPORT VEHICLE STROLLER
John C. Polak; Antoinette M. Polak; M. Darlene Polak, and M. Antoinette Polak, all of 6748 Del Cerro Blvd., San Diego, Calif. 92120
Filed Oct. 9, 1996, Ser. No. 60,993
Term of patent 14 years
LOC (6) Cl. 12 - *12*
U.S. Cl. D12—129

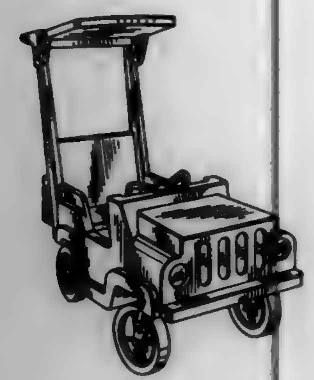

388,368
TANDEM STROLLER
John C. Polak; Antoinette M. Polak; M. Darlene Polak, and M. Antoinette Polak, all of 6748 Del Cerro Blvd., San Diego, Calif. 92120
Filed Dec. 9, 1996, Ser. No. 63,448
Term of patent 14 years
LOC (6) Cl. 12 - *12*
U.S. Cl. D12—129

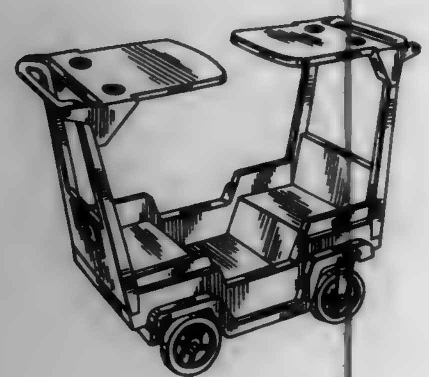

388,369
TIRE TREAD
Richard Winfield Harden, Jr., Tallmadge, Ohio, assignor to The Goodyear Tire & Rubber Company, Akron, Ohio
Filed Aug. 15, 1996, Ser. No. 58,473
Term of patent 14 years
LOC (6) Cl. 12 - *15*
U.S. Cl. D12—146

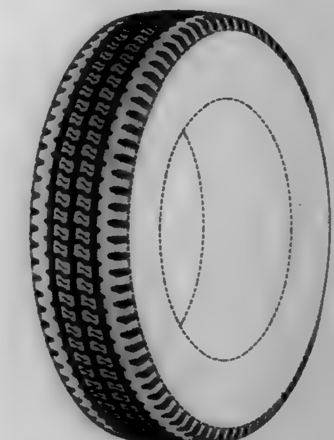

388,370
TIRE TREAD
Austin Gale Young, Copley, and Daniel Edward Schuster, North Royalton, both of Ohio, assignors to The Goodyear Tire & Rubber Company, Akron, Ohio
Filed Sep. 12, 1996, Ser. No. 59,519
Term of patent 14 years
LOC (6) Cl. 12 - *15*
U.S. Cl. D12—146

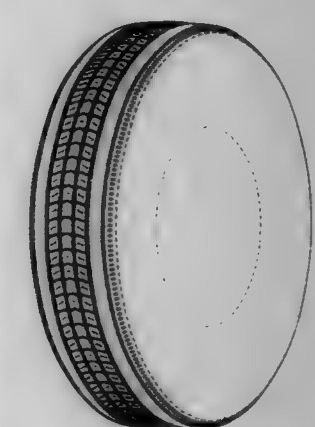

388,371
AUTOMOBILE TIRE
Tatsuya Miyazaki, Akashi, Japan, assignor to Sumitomo Rubber Industries, Ltd., Kobe, Japan
Filed Sep. 13, 1996, Ser. No. 59,567
Claims priority, application Japan, Mar. 14, 1996, 8-7202
Term of patent 14 years
LOC (6) Cl. 12 - *15*
U.S. Cl. D12—146

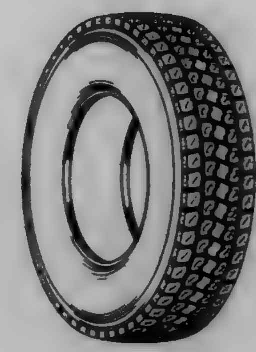

388,372
TIRE TREAD
Stephanie Carol Brown, Akron; Efimia Ellen Rohweder, Uniontown; Michael Alois Kolowski, Mogadore, and Frederick William Miller, Akron, all of Ohio, assignors to The Goodyear Tire & Rubber Company, Akron, Ohio
Filed Dec. 17, 1996, Ser. No. 63,871
Term of patent 14 years
LOC (6) Cl. 12 - *15*
U.S. Cl. D12—146

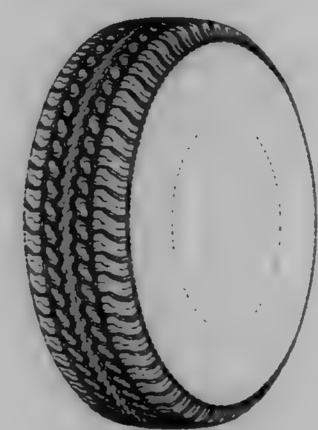

388,373
TIRE TREAD
Michel Alfred Marie Oscar Breny, Holzthum, and William Urbano Villamizar, Mersch, both of Luxembourg, assignors to The Goodyear Tire & Rubber Company, Akron, Ohio
Filed Feb. 20, 1996, Ser. No. 50,631
Term of patent 14 years
LOC (6) Cl. 12 - *15*
U.S. Cl. D12—147

388,374
PNEUMATIC TIRE FOR VEHICLES
Nack-Hyun Lim, and Dong-Ju Park, both of Kwangju, Rep. of Korea, assignors to Kumho & Co., Inc., Seoul, Rep. of Korea
Filed Mar. 25, 1996, Ser. No. 52,187
Claims priority, application Rep. of Korea, Sep. 29, 1995, 18368/1995
The portion of the term of this patent subsequent to Oct. 7, 2011, has been disclaimed.
Term of patent 14 years
LOC (6) Cl. 12 - *15*
U.S. Cl. D12—147

388,375
TIRE TREAD
Pierre Harpes, Luxembourg, Luxembourg, and Richard Heinen, Habay-la-Neuve, Belgium, assignors to The Goodyear Tire & Rubber Company, Akron, Ohio
Filed Nov. 6, 1996, Ser. No. 62,079
Term of patent 14 years
LOC (6) Cl. 12 - *15*
U.S. Cl. D12—147

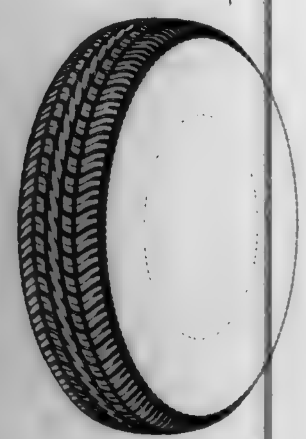

388,376
TIRE TREAD
Nikki Lynne Miller, Buffalo Grove, Ill.; Kevin Alan Reid, Asheville, N.C.; William Eugene Glover, Akron, and Norman David Anderson, Uniontown, both of Ohio, assignors to The Goodyear Tire & Rubber Company, Akron, Ohio
Filed Dec. 9, 1996, Ser. No. 63,422
Term of patent 14 years
LOC (6) Cl. 12 - *15*
U.S. Cl. D12—147

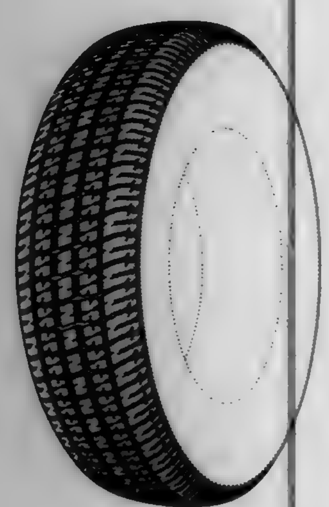

388,377
TIRE TREAD
Nikki Lynne Miller, Buffalo Grove, Ill.; Kevin Alan Reid, Asheville, N.C.; William Eugene Glover, Akron, and Norman David Anderson, Uniontown, both of Ohio, assignors to The Goodyear Tire & Rubber Company, Akron, Ohio
Filed Dec. 9, 1996, Ser. No. 63,427
Term of patent 14 years
LOC (6) Cl. 12 - *15*
U.S. Cl. D12—147

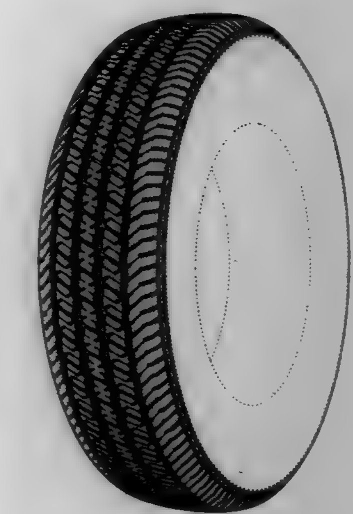

388,378
TIRE TREAD
Billy Joe Ratliff, Jr., Akron, Ohio, assignor to The Goodyear Tire & Rubber Company, Akron, Ohio
Filed Dec. 18, 1996, Ser. No. 63,918
Term of patent 14 years
LOC (6) Cl. 12 - *15*
U.S. Cl. D12—147

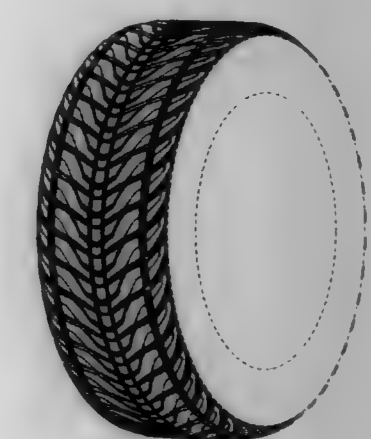

388,379
TIRE TREAD
Pierre Harpes, Luxembourg, and Maurice Graas, Reichlange, both of Luxembourg, assignors to The Goodyear Tire & Rubber Company, Akron, Ohio
Filed Jan. 2, 1997, Ser. No. 64,470
Term of patent 14 years
LOC (6) Cl. 12 - *15*
U.S. Cl. D12—147

388,380
TIRE TREAD
Pierre Harpes, Luxembourg, Luxembourg, and Richard Heinen, Habay-la-Neuve, Belgium, assignors to The Goodyear Tire & Rubber Company, Akron, Ohio
Filed Feb. 4, 1997, Ser. No. 66,527
Term of patent 14 years
LOC (6) Cl. 12 - *15*
U.S. Cl. D12—147

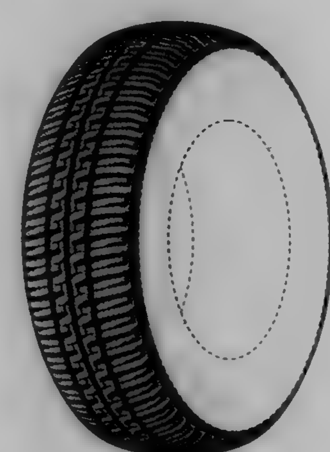

388,381
TIRE TREAD
Richard Heinen, Habay-la-Neuve, Belgium, and Maurice Graas, Reichlange, Luxembourg, assignors to The Goodyear Tire & Rubber Company, Akron, Ohio
Filed Feb. 12, 1997, Ser. No. 66,562
Term of patent 14 years
LOC (6) Cl. 12 - *15*
U.S. Cl. D12—147

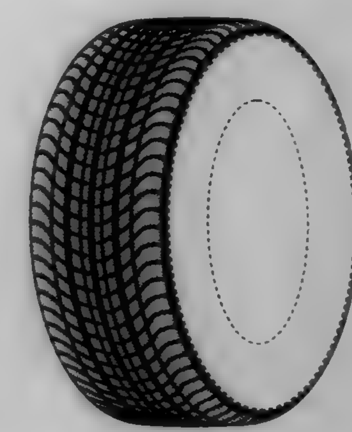

388,382
TRAILER CHAIN HOLDER
James L. Williams, 2519 Hillside Ct., Sugar Land, Tex. 77479
Filed May 13, 1996, Ser. No. 54,483
Term of patent 14 years
LOC (6) Cl. 12 - *16*
U.S. Cl. D12—162

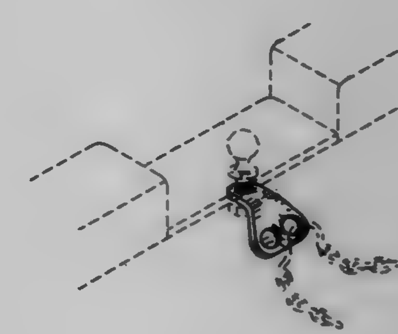

388,383
TRAILER TONGUE LOCK
Arnold Foster, and Pamela Foster, both of 4555 Baumbach Ln., Acampo, Calif. 95220
Filed Aug. 27, 1996, Ser. No. 58,890
Term of patent 14 years
LOC (6) Cl. 12 - *16*
U.S. Cl. D12—162

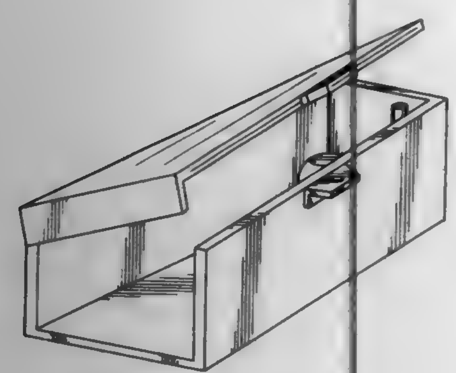

388,384
TRAILER CHAIN HOLDER
James L. Williams, 2519 Hillside Ct., Sugar Land, Ft. Bend County, Tex. 77479
Filed Sep. 26, 1996, Ser. No. 60,349
Term of patent 14 years
LOC (6) Cl. 12 - *16*
U.S. Cl. D12—162

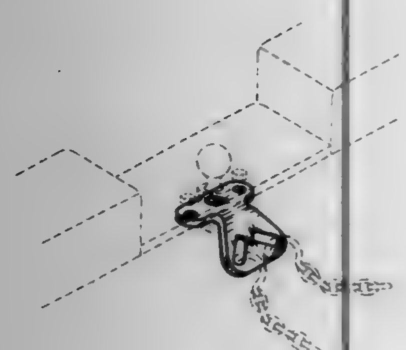

388,385
TRUCK REAR WINDOW PROTECTOR
Philip R. Protz, Sr., Lynch Station, Va., assignor to H-I-S Designers Inc., Lynch Station, Va.
Filed May 3, 1996, Ser. No. 53,981
Term of patent 14 years
LOC (6) Cl. 12 - *16*
U.S. Cl. D12—167

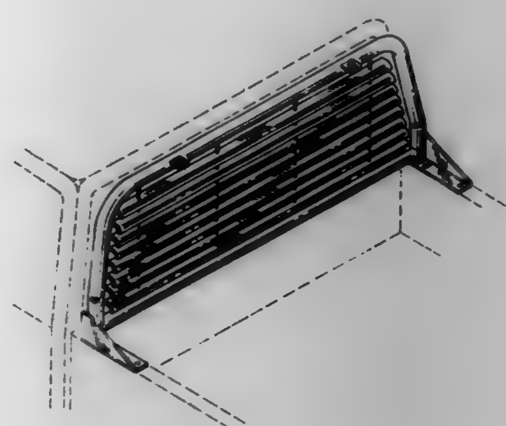

388,386
REAR BUMPER FOR PICKUP TRUCKS AND OTHER MOTOR VEHICLES
Jess Sanchez, Jr., 11150 Mines Blvd., Whittier, Calif. 90606
Filed Jan. 15, 1997, Ser. No. 65,007
Term of patent 14 years
LOC (6) Cl. 12 - *16*
U.S. Cl. D12—169

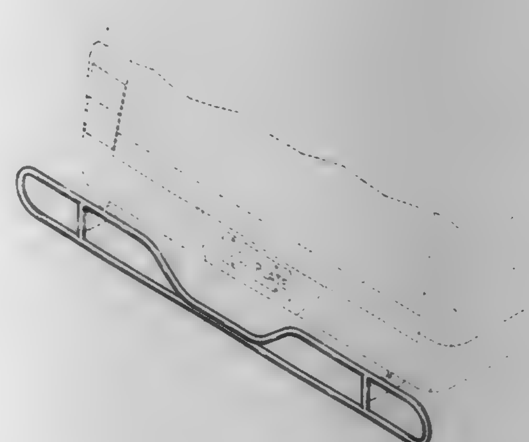

388,387
MOTORCYCLE FRONT SHIELD WITH WINGS
Craig W. Vetter, P.O. Box 223820, Carmel, Calif. 93922
Filed Sep. 19, 1996, Ser. No. 59,994
Term of patent 14 years
LOC (6) Cl. 12 - *16*
U.S. Cl. D12—182

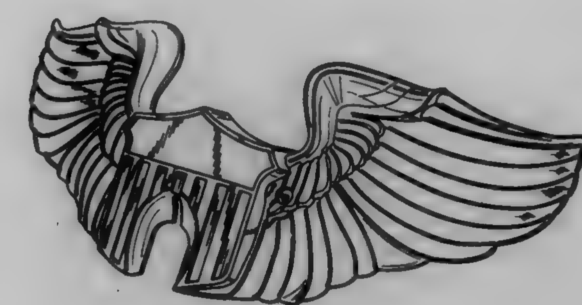

388,388
DECORATIVE FENDER MOLDING
Theodore Madison, 540 W. 55th St. #6L, New York, N.Y. 10019
Filed Dec. 17, 1996, Ser. No. 63,869
Term of patent 14 years
LOC (6) Cl. 12 - *16*
U.S. Cl. D12—190

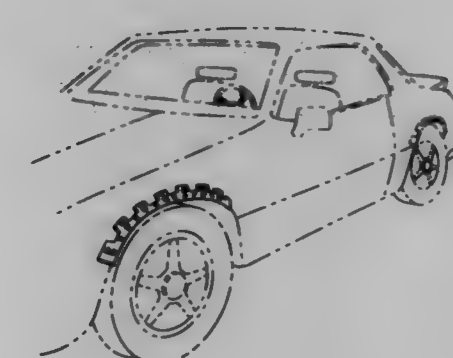

388,389
BICYCLE WHEEL
Gregory Johnson, 15399 Wisconsin, Detroit, Mich. 48238
Filed Oct. 22, 1996, Ser. No. 61,324
Term of patent 14 years
LOC (6) Cl. 12 - *16*
U.S. Cl. D12—205

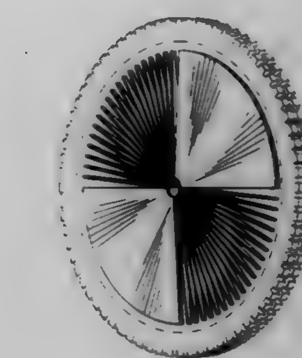

388,390
VEHICLE WHEEL FRONT FACE
Suny Chung, Placentia, Calif., assignor to American Racing Equipment, Inc., Rancho Dominguez, Calif.
Filed Mar. 28, 1996, Ser. No. 52,356
Term of patent 14 years
LOC (6) Cl. 12 - *16*
U.S. Cl. D12—209

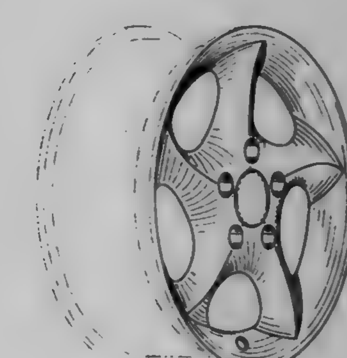

388,391
HOT AIR BALLOON

Robert G. Corey, Louisville, Ky., assignor to Brown & Williamson Tobacco Corporation, Louisville, Ky.

Filed Nov. 19, 1996, Ser. No. 62,997

Term of patent 14 years

LOC (6) Cl. 12 - *07*

U.S. Cl. D12—323

388,392
UNMANNED AIRCRAFT

John E. McGinnis, Dunwoody, Ga., and Bruce R. Wright, Santa Clarita, Calif., assignors to Lockheed Martin Corporation, Bethesda, Md.

Filed Nov. 3, 1995, Ser. No. 46,001

Term of patent 14 years

LOC (6) Cl. 12 - *07*

U.S. Cl. D12—333

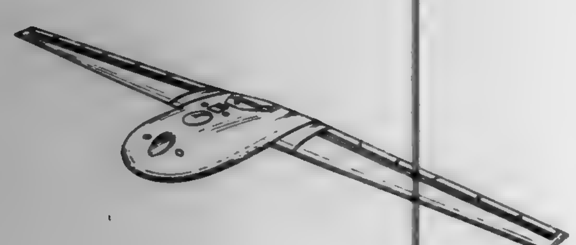

388,393
RESTRAINT DEVICE FOR CARGO HANDLING

Edward Moradians, Canoga Park, Calif., assignor to Ancra International Corporation, Hawthorne, Calif.

Filed Feb. 27, 1995, Ser. No. 35,417

Term of patent 14 years

LOC (6) Cl. 12 - *16*

U.S. Cl. D12—400

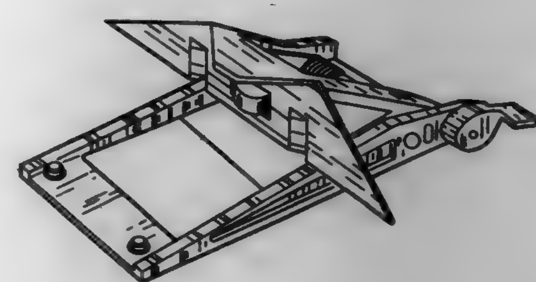

388,394
MOTORCYCLE LUGGAGE CARRIER

Donald M. Gogan, Brookfield, and Geoffrey T. Williams, Mequon, both of Wis., assignors to Harley-Davidson Motor Company, Milwaukee, Wis.

Filed May 1, 1996, Ser. No. 53,873

Term of patent 14 years

LOC (6) Cl. 12 - *16*

U.S. Cl. D12—407

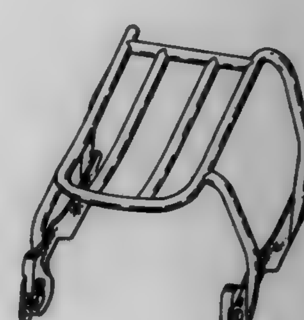

388,395
FLOURESCENT LAMP HOLDER

Dieter Henrici, Arnsberg, Germany, assignor to Brokelmann, Jaeger & Busse, GmbH & Co., Arnsberg, Germany

Filed Oct. 6, 1995, Ser. No. 45,065

Claims priority, application WIPO, Apr. 3, 1995, DM/032641

Term of patent 14 years

LOC (6) Cl. 13 - *03*

U.S. Cl. D13—134

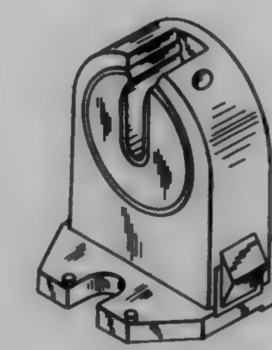

388,396
MODULAR SENSOR INPUT BLOCK

Joseph L. Meloche, Bryan, Ohio, assignor to Ingersoll-Rand Company, Woodcliff Lake, N.J.

Filed May 2, 1996, Ser. No. 53,949

Term of patent 14 years

LOC (6) Cl. 13 - *03*

U.S. Cl. D13—146

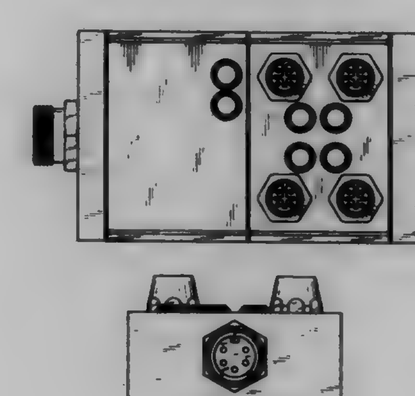

388,397
REMOTE DOORBELL ACTUATOR UNIT FOR AUTOMOBILES

Michael Larizza, 732 Gardenia Ave., Long Beach, Calif. 90813

Filed Jun. 4, 1996, Ser. No. 55,364

Term of patent 14 years

LOC (6) Cl. 13 - *03*

U.S. Cl. D13—168

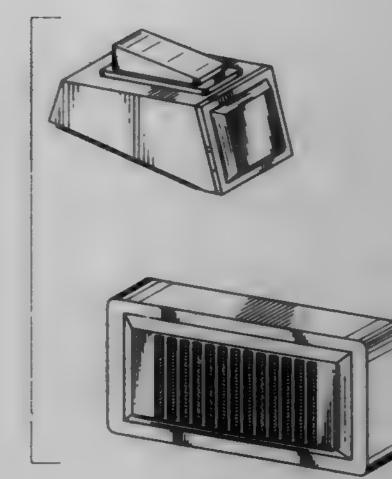

388,398
SWITCH ACTUATOR

Thae Hong Jeong, 233-84, Changwi-dong, Sungdong-ku, Seoul, Rep. of Korea

Continuation-in-part of Ser. No. 27,998, Sep. 23, 1994, abandoned. This application May 9, 1996, Ser. No. 54,326

Term of patent 14 years

LOC (6) Cl. 13 - *02*

U.S. Cl. D13—174

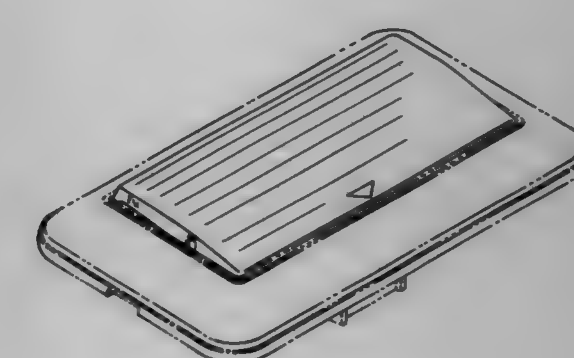

388,399
HEAT SINK

Robert B. Widmayer, Harvard, and Kenneth W. Larson, Elmhurst, both of Ill., assignors to Motorola, Inc., Schaumburg, Ill.

Continuation-in-part of Ser. No. 39,970, Jun. 7, 1995, abandoned, which is a division of Ser. No. 28,537, Sep. 19, 1994, Pat. No. Des. 367,469. This application Mar. 15, 1996, Ser. No. 51,685

Term of patent 14 years

LOC (6) Cl. 13 - *03*

U.S. Cl. D13—179

388,400
CABLE MANAGEMENT RACK

Joseph W. Rogers, Monticello, Ind., assignor to Precision Fabrication Technologies, Inc., Monon, Ind.

Filed Jan. 26, 1996, Ser. No. 49,658

Term of patent 14 years

LOC (6) Cl. 13 - *99*

U.S. Cl. D13—199

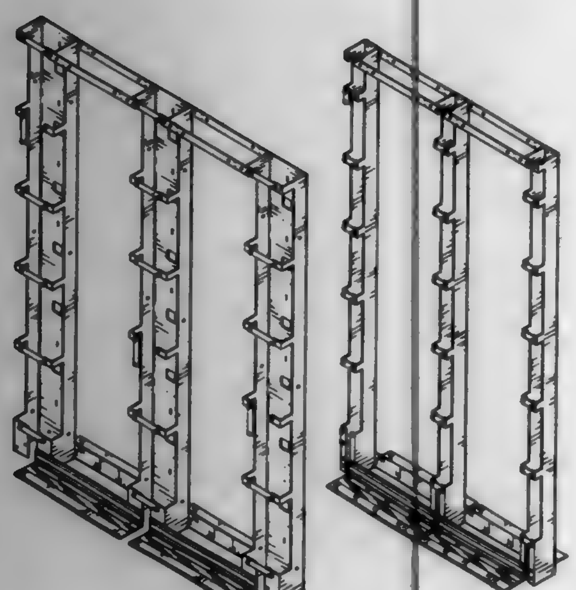

388,401
ELECTRONIC COMPUTER

Keita Tanaka, Tokyo, Japan, assignor to Kabushiki Kaisha Toshiba, Kanagawa-ken, Japan

Filed Sep. 16, 1996, Ser. No. 59,794

Claims priority, application Japan, Apr. 26, 1996, 8-12044

Term of patent 14 years

LOC (6) Cl. 14 - *02*

U.S. Cl. D14—106

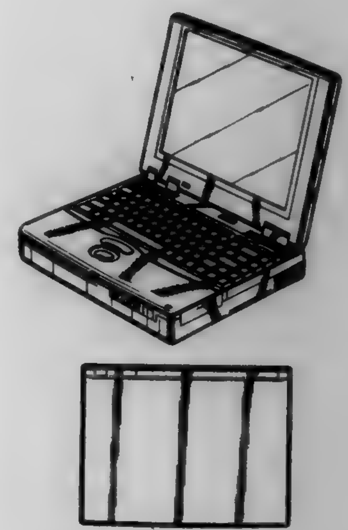

388,402
PORTION OF A SHOE UPPER

Wilson W. Smith, Beaverton, Oreg., assignor to Nike, Inc., Beaverton, Oreg.

Division of Ser. No. 37,841, Apr. 21, 1995, Pat. No. Des. 368,578. This application Oct. 18, 1995, Ser. No. 45,386

The portion of the term of this patent subsequent to Apr. 9, 2010, has been disclaimed.

Term of patent 14 years

LOC (6) Cl. 02 - *04*

U.S. Cl. D2—972

388,403
PORTABLE LAPTOP COMPUTER

Masaru Tochishita, Osaka, Japan, assignor to Matsushita Electric Industrial Co., Ltd., Osaka, Japan

Filed Dec. 4, 1996, Ser. No. 62,921

Claims priority, application Japan, Jun. 4, 1996, 8-16422

Term of patent 14 years

LOC (6) Cl. 14 - *02*

U.S. Cl. D14—106

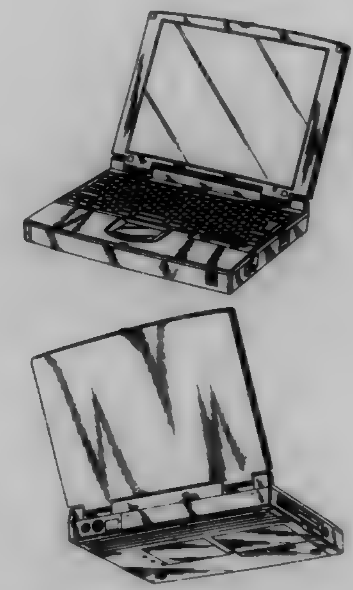

388,404
THREE-DIMENSIONAL SCANNING DEVICE

Kelly M. Kinnunen, 27 E. Seventh St., #25, Tempe, Ariz. 85281, and John H. Brisben, 2106 Kelmo Dr., Prescott, Ariz. 86301

Filed Jul. 3, 1996, Ser. No. 56,631

Term of patent 14 years

LOC (6) Cl. 14 - *02*

U.S. Cl. D14—107

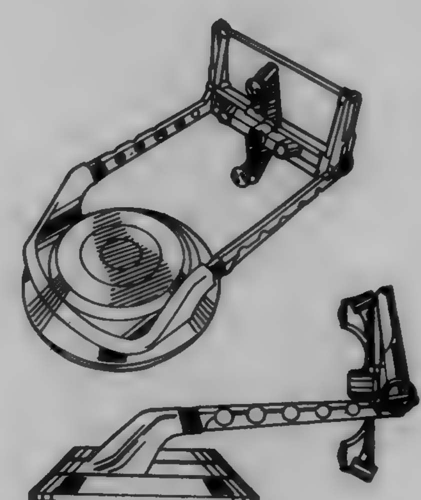

388,405
SCANNER

Art Lin, Taipei, Taiwan, assignor to Silitek Corporation, Taipei, Taiwan

Filed Oct. 21, 1996, Ser. No. 61,320

Term of patent 14 years

LOC (6) Cl. 14 - *02*

U.S. Cl. D14—107

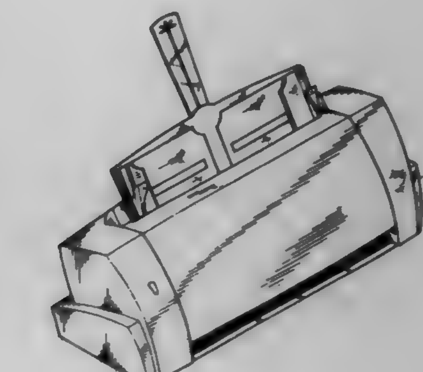

388,406
DISK DRIVE FOR A DATA PROCESSING SYSTEM

David Wayne Hill, and Tim Kerry Murphy, both of Rochester, Minn., assignors to International Business Machines Corporation, Armonk, N.Y.

Filed May 1, 1995, Ser. No. 38,297

Term of patent 14 years

LOC (6) Cl. 14 - *02*

U.S. Cl. D14—109

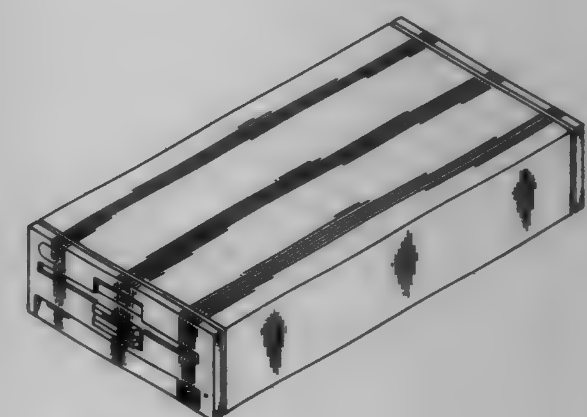

388,407
MONITOR FOR PERSONAL COMPUTERS
Tadeo Toulis, N.Y., N.Y.; Yves Behar, San Francisco, and Peter Lee, San Jose, both of Calif., assignors to Hewlett-Packard Company, Palo Alto, Calif.
Filed Jun. 28, 1996, Ser. No. 56,410
Term of patent 14 years
LOC (6) Cl. 14 - *02*
U.S. Cl. D14—113

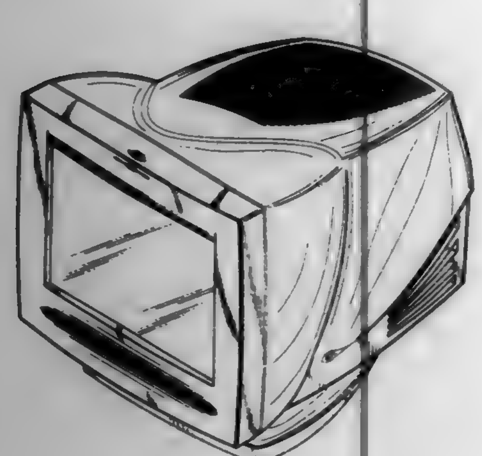

388,408
COMPUTER DISPLAY
Hirofumi Takemasa, Osaka, and Shigeo Usui, Kyoto, both of Japan, assignors to Matsushita Electric Industrial Co., Ltd., Osaka, Japan
Filed Nov. 8, 1996, Ser. No. 62,197
Claims priority, application Japan, May 9, 1996, 8-13546
Term of patent 14 years
LOC (6) Cl. 14 - *02*
U.S. Cl. D14—113

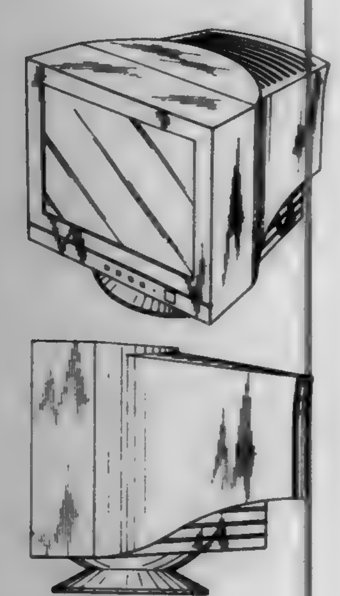

388,409
COMPUTER DISPLAY
Hirofumi Takemasa, Osaka, and Shigeo Usui, Kyoto, both of Japan, assignors to Matsushita Electric Industrial Co., Ltd., Osaka, Japan
Filed Nov. 8, 1996, Ser. No. 62,198
Claims priority, application Japan, May 9, 1996, 8-13547
Term of patent 14 years
LOC (6) Cl. 14 - *02*
U.S. Cl. D14—113

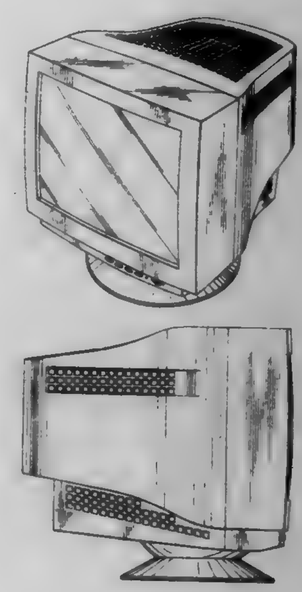

388,410
ELECTRONIC DISPLAY DEVICE
Ian James Myles, Mountain View, and Sonja Schiefer, Palo Alto, both of Calif., assignors to Shinho Electronics & Communications Co., Ltd., Seoul, Rep. of Korea
Filed Nov. 15, 1996, Ser. No. 62,443
Term of patent 14 years
LOC (6) Cl. 14 - *02*
U.S. Cl. D14—113

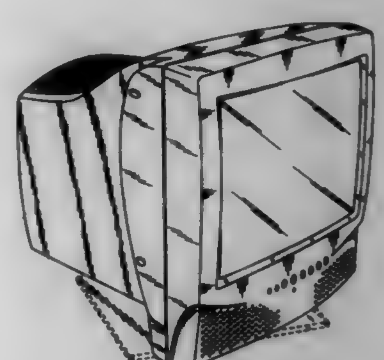

388,411
ELECTRONIC DISPLAY DEVICE
Ian James Myles, Montain View, Calif., assignor to Shinho Electronics & Communications Co., Ltd., Seoul, Rep. of Korea
Filed Nov. 15, 1996, Ser. No. 62,447
Term of patent 14 years
LOC (6) Cl. 14 - *02*
U.S. Cl. D14—113

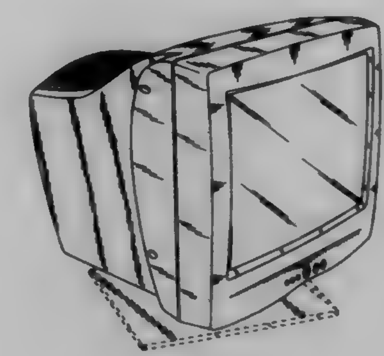

388,412
ELECTRONIC DISPLAY DEVICE
Ian James Myles, Mountain View, and Sonja Schiefer, Palo Alto, both of Calif., assignors to Shinho Electronics & Communications Co., Ltd., Seoul, Rep. of Korea
Filed Nov. 15, 1996, Ser. No. 62,483
Term of patent 14 years
LOC (6) Cl. 14 - *02*
U.S. Cl. D14—113

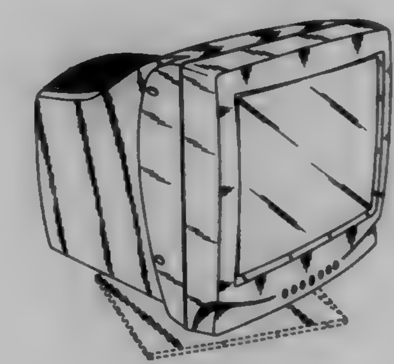

388,413
COMPUTER DISPLAY
Hirofumi Takemasa, Osaka, Japan, assignor to Matsushita Electric Industrial Co., Ltd., Osaka, Japan
Filed Dec. 16, 1996, Ser. No. 63,791
Claims priority, application Japan, Jul. 5, 1996, 8-20071
Term of patent 14 years
LOC (6) Cl. 14 - *02*
U.S. Cl. D14—113

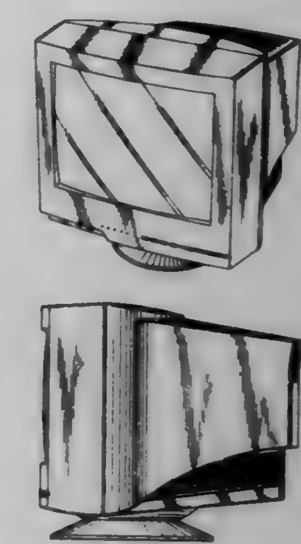

388,414
MOUSE PAD
Edward W. Carlson, 3009 E. Lake St., Minneapolis, Minn. 55406
Filed Feb. 12, 1996, Ser. No. 50,599
Term of patent 14 years
LOC (6) Cl. 14 - *02*
U.S. Cl. D14—114

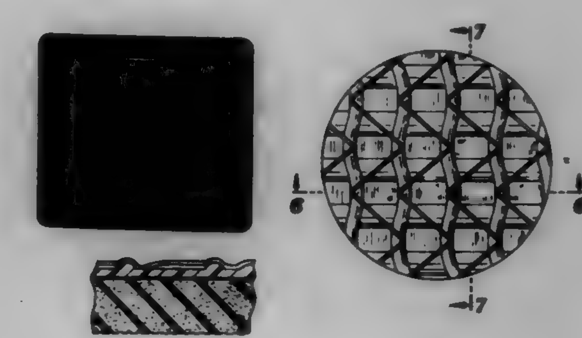

388,415
RF SCAN GUN HOLDER
Gordon Seabert, 6832 Ranch Grove Rd., Riverside, Calif. 92506
Filed May 7, 1996, Ser. No. 54,132
Term of patent 14 years
LOC (6) Cl. 14 - *02*
U.S. Cl. D14—114

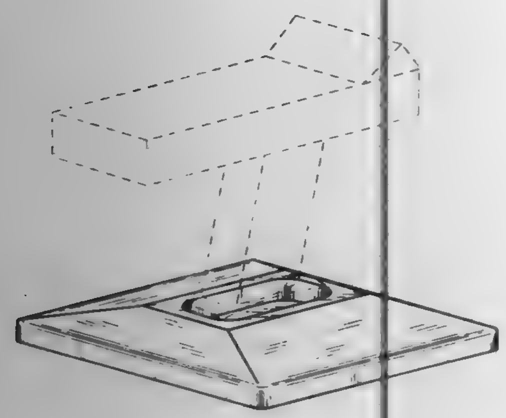

388,416
FLIP REFERENCE MOUSEPAD
Stephen J. Jones, 780 S. 81 East, Provo, Utah 84606
Filed Oct. 22, 1996, Ser. No. 61,362
Term of patent 14 years
LOC (6) Cl. 14 - *02*
U.S. Cl. D14—114

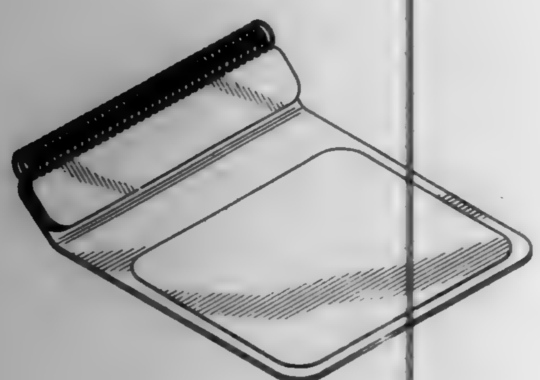

388,417
COMPUTER SCREEN WITH AN ICON
Russell G. Polson, San Marcos, Calif., and Max J. Murdock, Roy, Utah, assignors to Iomega Corporation, Roy, Utah
Filed Mar. 18, 1996, Ser. No. 51,755
Term of patent 14 years
LOC (6) Cl. 14 - *02*
U.S. Cl. D14—114.4

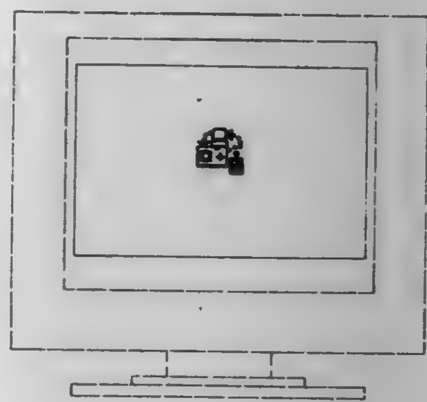

388,418
COMPUTER SCREEN WITH AN ICON
Russell G. Polson, San Marcos, Calif., and Max J. Murdock, Roy, Utah, assignors to Iomega Corporation, Roy, Utah
Filed Mar. 18, 1996, Ser. No. 51,786
Term of patent 14 years
LOC (6) Cl. 14 - *02*
U.S. Cl. D14—114.4

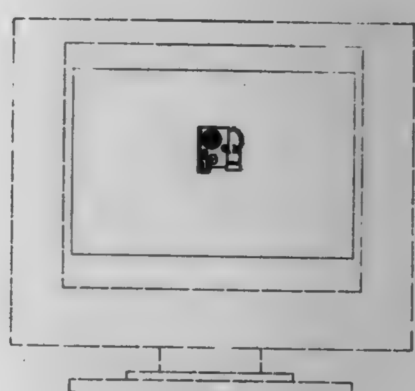

388,419
COMPUTER SCREEN WITH AN ICON
Russell G. Polson, San Marcos, Calif., and Max J. Murdock, Roy, Utah, assignors to Iomega Corporation, Roy, Utah
Filed Mar. 18, 1996, Ser. No. 51,788
Term of patent 14 years
LOC (6) Cl. 14 - *02*
U.S. Cl. D14—114.4

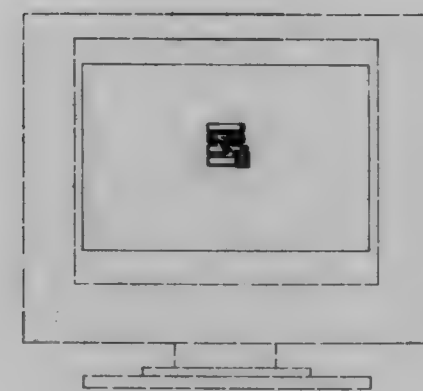

388,420
COMPUTER SCREEN WITH AN ICON
Russell G. Polson, San Marcos, Calif., and Max J. Murdock, Roy, Utah, assignors to Iomega Corporation, Roy, Utah
Filed Mar. 18, 1996, Ser. No. 51,790
Term of patent 14 years
LOC (6) Cl. 14 - *02*
U.S. Cl. D14—114.4

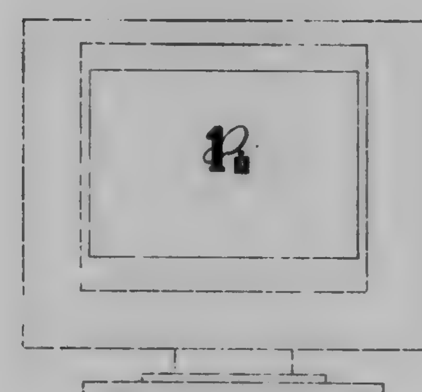

388,421
ICON FOR A COMPUTER SCREEN
Russell G. Polson, San Marcos, Calif., and Max J. Murdock, Roy, Utah, assignors to Iomega Corporation, Roy, Utah
Filed Mar. 18, 1996, Ser. No. 51,747
Term of patent 14 years
LOC (6) Cl. 14 - *02*
U.S. Cl. D14—114.7

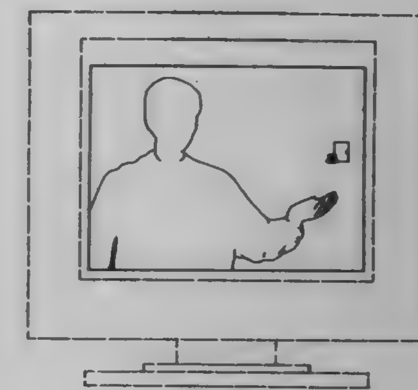

388,422
ICON FOR A COMPUTER SCREEN
Russell G. Polson, San Marcos, Calif., and Max J. Murdock, Roy, Utah, assignors to Iomega Corporation, Roy, Utah
Filed Mar. 18, 1996, Ser. No. 51,789
Term of patent 14 years
LOC (6) Cl. 14 - *02*
U.S. Cl. D14—114.7

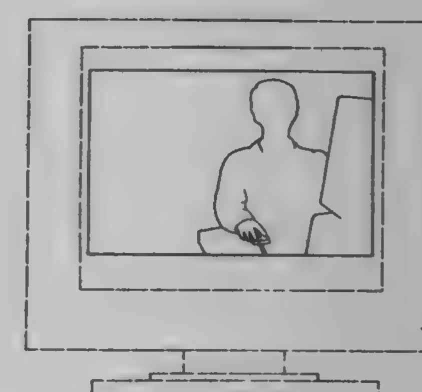

388,423
ICON FOR A COMPUTER SCREEN
Russell G. Polson, San Marcos, Calif., and Max J. Murdock, Roy, Utah, assignors to Iomega Corporation, Roy, Utah
Filed Mar. 18, 1996, Ser. No. 51,800
Term of patent 14 years
LOC (6) Cl. 14 - *02*
U.S. Cl. D14—114.7

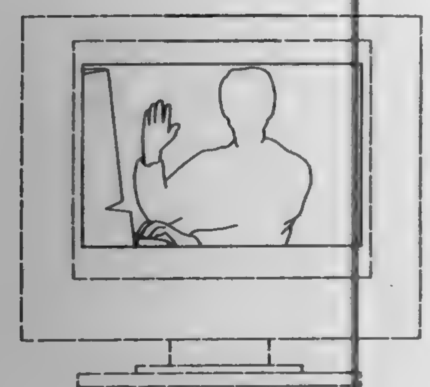

388,424
DISPLAY HAVING ICONS FOR USE IN A TELEPHONE
David Mark DeMuro, Cary; John Francis Mitchell, Chicago; Laura Sheley Wright, Des Plaines, and Kenneth William Douros, Schaumburg, all of Ill., assignors to Motorola, Inc., Schaumburg, Ill.
Filed Nov. 9, 1993, Ser. No. 15,244
Term of patent 14 years
LOC (6) Cl. 14 - *02*
U.S. Cl. D14—114.9

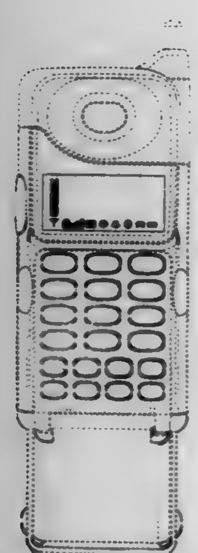

388,425
SET OF ICONS FOR A COMPUTER SCREEN
James W. Newton, Belmont, and Larry M. Hoffman, Mountain View, both of Calif., assignors to Sun Microsystems, Inc., Mountain View, Calif.
Filed Mar. 25, 1996, Ser. No. 52,184
Term of patent 14 years
LOC (6) Cl. 14 - *02*
U.S. Cl. D14—114.9

388,426
HEAD-MOUNTED DISPLAY DEVICE
Stephen A. Pombo, Campbell, Calif., assignor to Kopin Corporation, Taunton, Mass.
Filed May 7, 1996, Ser. No. 53,203
Term of patent 14 years
LOC (6) Cl. 14 - *01*
U.S. Cl. D14—124

388,427
VIDEO CASSETTE RECORDER
Doo Won Oh, Kyunggi-do, Rep. of Korea, assignor to LG Electronics Inc., Seoul, Rep. of Korea
Filed Oct. 7, 1996, Ser. No. 60,758
Term of patent 14 years
LOC (6) Cl. 14 - *01*
U.S. Cl. D14—135

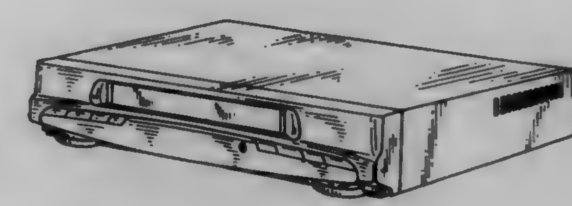

388,428
MOBILE TELEPHONE
Richard Lindahl, and Thomas William Waldner, both of Malmö, Sweden, assignors to Telefonaktiebolaget LM Ericsson, Stockholm, Sweden
Filed Sep. 12, 1996, Ser. No. 59,491
Claims priority, application Sweden, Mar. 13, 1996, 96-0587
Term of patent 14 years
LOC (6) Cl. 14 - *03*
U.S. Cl. D14—138

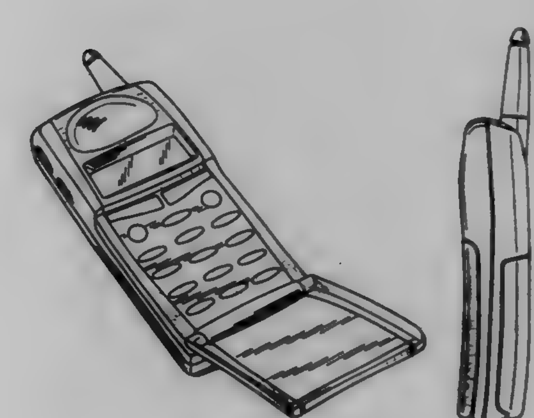

388,429
TELEPHONE HOUSING
Daryl R. Harris, Evanston, and Derek E. Jensen, Grayslake, both of Ill., assignors to Motorola, Inc., Schaumburg, Ill.
Filed Sep. 30, 1996, Ser. No. 60,536
Term of patent 14 years
LOC (6) Cl. 14 - *03*
U.S. Cl. D14—138

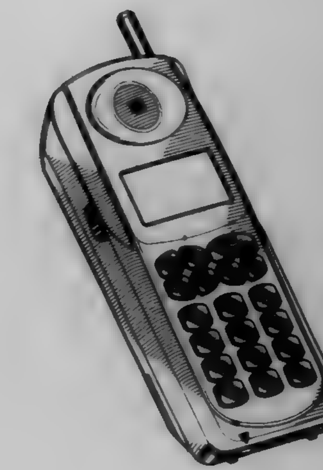

388,430
FACE FOR PORTABLE TELEPHONE
Daryl R. Harris, Evanston, and Mark A. Luzbetak, Chicago, both of Ill., assignors to Motorola, Inc., Schaumburg, Ill.
Filed Dec. 20, 1996, Ser. No. 64,000
Term of patent 14 years
LOC (6) Cl. 14 - *03*
U.S. Cl. D14—138

388,431
PORTABLE WIRELESS TELEPHONE
Tetsufumi Takayasu; Tatsuo Kuwayama; Takao Kumakoshi, and Hiroshi Fujiwara, all of Tokyo, Japan, assignors to Kokusai Electric Co., Ltd., Tokyo, Japan
Filed Jan. 29, 1997, Ser. No. 65,455
Claims priority, application Japan, Aug. 2, 1996, 8-23386
Term of patent 14 years
LOC (6) Cl. 14 - *03*
U.S. Cl. D14—138

388,432
CORDLESS TELEPHONE AND BASE UNIT
Ronald L. Lytel, Indianapolis, Ind., assignor to Thomson Consumer Electronics, Indianapolis, Ind.
Filed Aug. 14, 1996, Ser. No. 58,421
Term of patent 14 years
LOC (6) Cl. 14 - *03*
U.S. Cl. D14—149

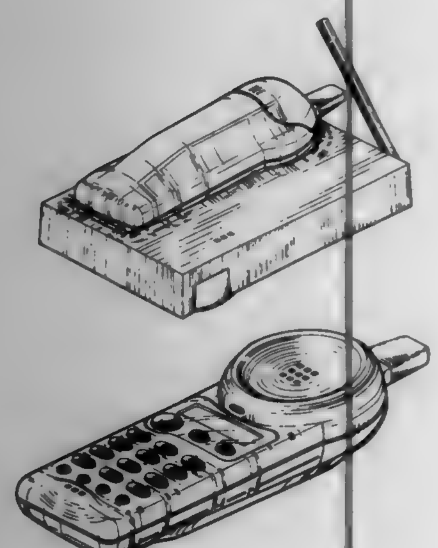

388,433
TELEPHONE BASE AND STAND
Robert Lepack, Calgary, Canada, assignor to Northern Telecom Limited, Montreal, Canada
Filed Dec. 18, 1996, Ser. No. 63,924
Term of patent 14 years
LOC (6) Cl. 14 - *03*
U.S. Cl. D14—149

388,434
TELEPHONE BASE AND STAND
Robert Lepack, Calgary, Canada, assignor to Northern Telecom Limited, Montreal, Canada
Filed Dec. 18, 1996, Ser. No. 63,926
Term of patent 14 years
LOC (6) Cl. 14 - *03*
U.S. Cl. D14—149

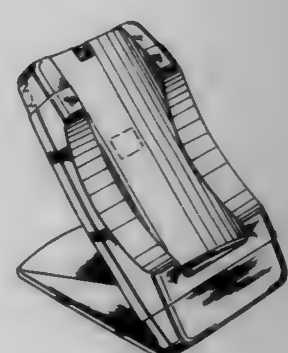

388,435
COMBINED AM/FM RADIO AND STEREO CASSETTE PLAYER
Marc H. Segan, New York; Gary Strauss, Mamaroneck, both of N.Y.; Gerald W. Cummings, Marlton, N.J., and Vint Gonser, Essex, Mass., assignors to Long Hall Technologies, L.L.C., New York, N.Y.
Filed Jul. 26, 1996, Ser. No. 57,520
Term of patent 14 years
LOC (6) Cl. 14 - *01*
U.S. Cl. D14—163

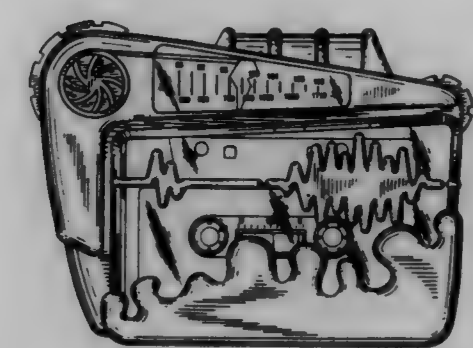

388,436
STEREO HEADPHONE
Marc H. Segan, New York; Gary Strauss, Mamaroneck, both of N.Y., and Gerald W. Cummings, Marlton, N.J., assignors to Long Hall Technologies, L.L.C., New York, N.Y.
Filed Jul. 25, 1996, Ser. No. 57,456
Term of patent 14 years
LOC (6) Cl. 14 - *01*
U.S. Cl. D14—205

388,437
EARPHONE FOR PORTABLE TERMINAL
Yoshinori Inukai, Kawasaki, Japan, assignor to Canon Kabushiki Kaisha, Tokyo, Japan
Filed Oct. 10, 1996, Ser. No. 60,983
Claims priority, application Japan, Apr. 19, 1996, 8-11584
Term of patent 14 years
LOC (6) Cl. 14 - *01*
U.S. Cl. D14—223

388,438
CONTROL HEAD FOR A MOBILE RADIO
Masaru Tokiyama, Coral Springs, and Glen A. Oross, Sunrise, both of Fla., assignors to Motorola, Inc., Schaumburg, Ill.
Filed Mar. 4, 1996, Ser. No. 51,300
Term of patent 14 years
LOC (6) Cl. 14 - *03*
U.S. Cl. D14—258

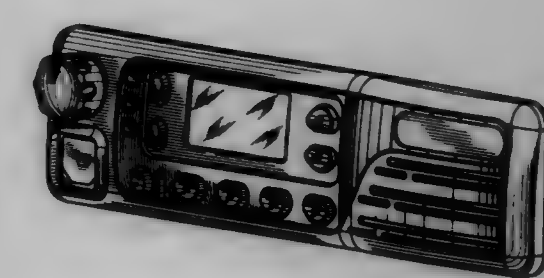

388,439
MODULAR PUMP

George A. Cantley, Akron, and David L. Prince, Medina, both of Ohio, assignors to Teledyne Industries, Inc., Los Angeles, Calif.

Division of Ser. No. 51,240, Mar. 6, 1996. This application Nov. 25, 1996, Ser. No. 62,790

Term of patent 14 years

LOC (6) Cl. 15 - *02*

U.S. Cl. D15—7

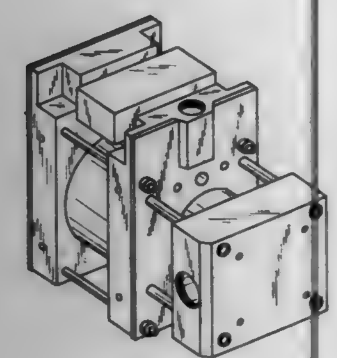

388,440
SELF-LOADING MATERIAL SPREADER

John A. Bentley, 308 Ashford Dr., Lancaster, Pa. 17601

Filed Sep. 6, 1996, Ser. No. 59,300

Term of patent 14 years

LOC (6) Cl. 15 - *03*

U.S. Cl. D15—13

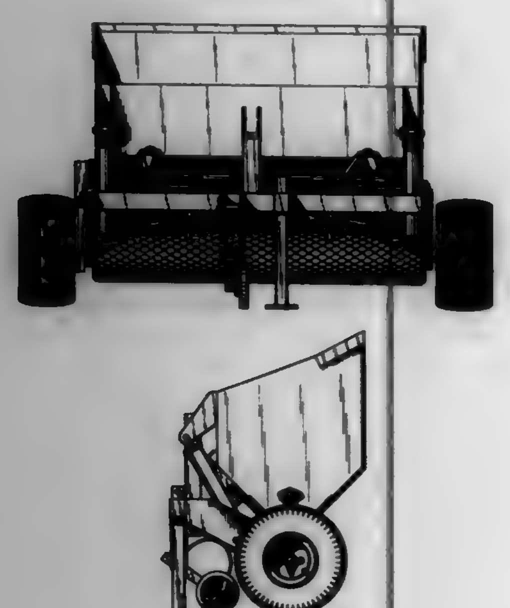

388,441
SCROLL SAW

Lee Hsin-Chih Chung, No.21-8, Shang San Cho Woo, Wuchang-Li , ChungLi City, TaoYuan Hsien, Taiwan

Filed Dec. 11, 1996, Ser. No. 63,630

Term of patent 14 years

LOC (6) Cl. 15 - *09*

U.S. Cl. D15—133

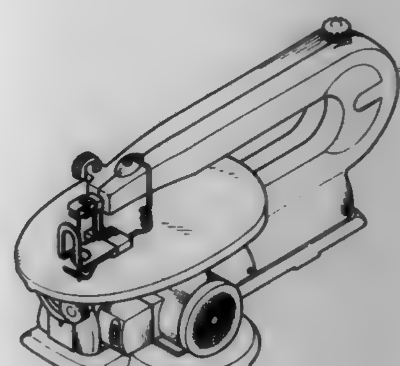

388,442
MITER SAW

Yoshinori Shibata, and Naohiro Hayakawa, both of Anjo, Japan, assignors to Makita Corporation, Anjo, Japan

Filed Dec. 17, 1996, Ser. No. 63,849

Claims priority, application Japan, Jun. 17, 1996, 8-18064

Term of patent 14 years

LOC (6) Cl. 15 - *09*

U.S. Cl. D15—133

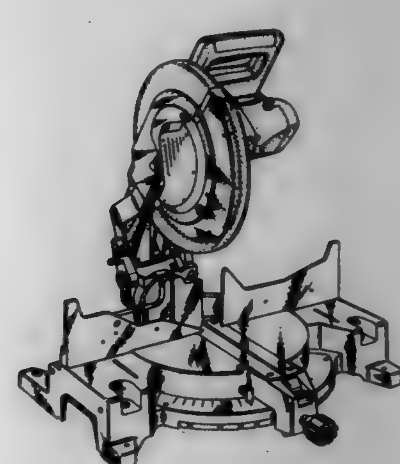

388,443
MITER SAW

Takayoshi Kondo, Anjo, Japan, assignor to Makita Corporation, Anjo, Japan

Filed Dec. 18, 1996, Ser. No. 63,899

Claims priority, application Japan, Jun. 18, 1996, 8-18214

Term of patent 14 years

LOC (6) Cl. 15 - *09*

U.S. Cl. D15—133

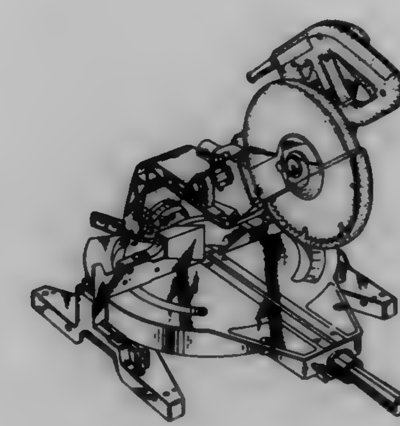

388,444
METAL CUTTING INSERT

Amir Satran, Kfar Vradim, Israel, assignor to Iscar, Ltd., Migdal Tefen, Israel

Filed May 23, 1996, Ser. No. 54,839

Claims priority, application Israel, Nov. 28, 1995, 25487

Term of patent 14 years

LOC (6) Cl. 15 - *09*

U.S. Cl. D15—139

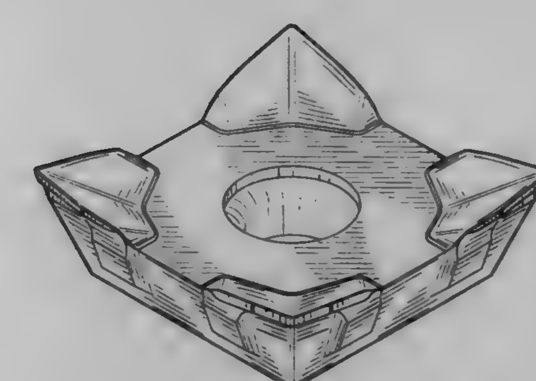

388,445
PUNCH RETAINER

Michael J. Powlett, Warwickshire, England, assignor to Porter Precision Products Co., Cincinnati, Ohio

Filed Sep. 23, 1996, Ser. No. 60,139

Term of patent 14 years

LOC (6) Cl. 15 - *09*

U.S. Cl. D15—140

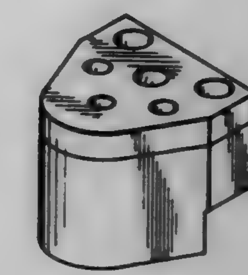

388,446
PUNCH-BLADE HOLDER

Chuzo Mori, Tokyo, Japan, assignor to Carl Jimuki Kabushiki Kaisha, Tokyo, Japan

Filed Nov. 12, 1996, Ser. No. 62,220

Term of patent 14 years

LOC (6) Cl. 15 - *09*

U.S. Cl. D15—140

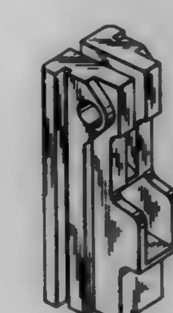

388,447
UNIVERSAL MIXER
Freidrich Otto, Hameln, Germany, assignor to A. Stephan U. Soehne GmbH & Co., Hameln, Germany
Filed Sep. 6, 1996, Ser. No. 59,290
Term of patent 14 years
LOC (6) Cl. 15 - *99*
U.S. Cl. D15—147

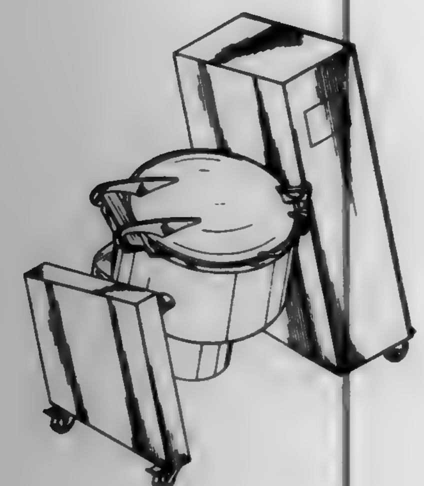

388,448
MAGNIFIER LENS
Bo Gunnar Lonnstedt, Vanadisvägen 29, 113 23 Stockholm, Sweden
Filed Jan. 5, 1996, Ser. No. 48,627
Claims priority, application Sweden, Jul. 6, 1995, 95-1342
Term of patent 14 years
LOC (6) Cl. 16 - *06*
U.S. Cl. D16—135

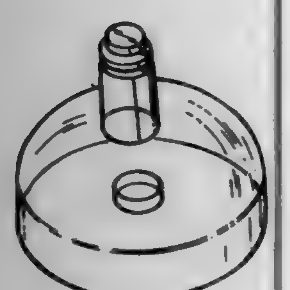

388,449
ELECTRONIC STILL CAMERA
Hiroshi Ohi, and Seiji Kurokawa, both of Tochigi-ken, Japan, assignors to Sharp Kabushiki Kaisha, Osaka, Japan
Filed Nov. 29, 1996, Ser. No. 62,884
Claims priority, application Japan, May 31, 1996, 8-016048; May 31, 1996, 8-016049
Term of patent 14 years
LOC (6) Cl. 16 - *01*
U.S. Cl. D16—202

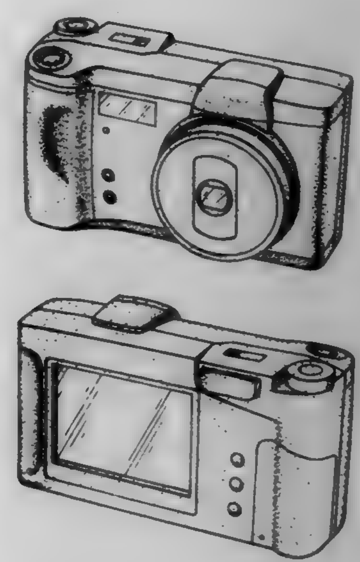

388,450
MONITOR CAMERA
Masataka Hamano, Shizuoka, and Katsumi Kato, Yokohama, both of Japan, assignors to Star Micronics Co., Ltd., Shizuoka, Japan
Filed Aug. 7, 1996, Ser. No. 58,087
Claims priority, application Japan, Feb. 7, 1996, 8-3119
Term of patent 14 years
LOC (6) Cl. 16 - *01*
U.S. Cl. D16—203

388,451
SELF PHOTOGRAPHY BOOTH
Yefim Massarsky, Newton, Mass., assignor to Foto Fantasy, Inc., Windham, N.H.
Filed Jun. 3, 1996, Ser. No. 55,286
Term of patent 14 years
LOC (6) Cl. 16 - *01*
U.S. Cl. D16—215

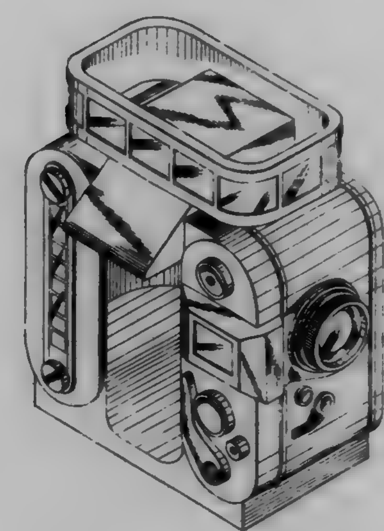

388,452
FACE MASK STRAP
Lowell J. Dreyfus, Chatsworth, Calif., assignor to Underwater Diving, Inc., Chatsworth, Calif.
Filed Dec. 11, 1995, Ser. No. 47,674
Term of patent 14 years
LOC (6) Cl. 16 - *06*
U.S. Cl. D16—339

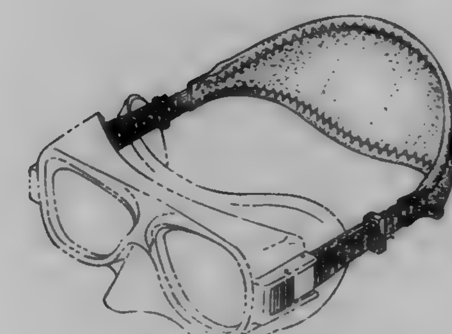

388,453
SUNGLASSES
Jey-Ching Lin, Taipei, Taiwan, assignor to Mao Lin Enterprises Co., Ltd., Taipei, Taiwan
Filed Dec. 6, 1996, Ser. No. 63,419
Term of patent 14 years
LOC (6) Cl. 16 - *06*
U.S. Cl. D16—315

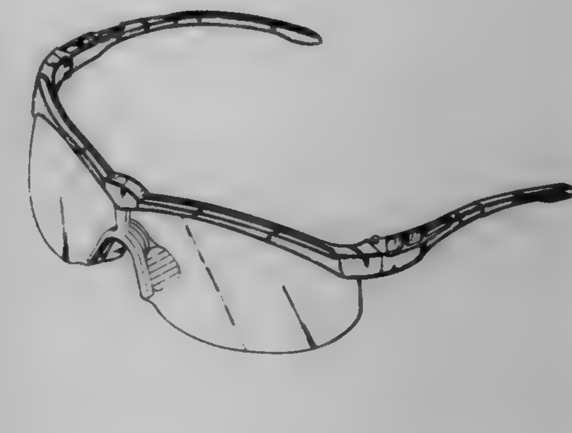

388,454
TEMPLE FOR SUNGLASSES
Dan Freeman, and Myles Freeman, both of Danville, Calif., assignors to Protective Optics, Inc., Hayward, Calif.
Filed Nov. 20, 1996, Ser. No. 62,629
Term of patent 14 years
LOC (6) Cl. 16 - *06*
U.S. Cl. D16—335

388,455
PRINTER
Akira Tanabe, Yamatokoriyama, Japan, assignor to Sharp Kabushiki Kaisha, Osaka, Japan
Filed Jun. 5, 1996, Ser. No. 55,378
Claims priority, application Japan, Dec. 5, 1995, 7-36881
Term of patent 14 years
LOC (6) Cl. 18 - *02*
U.S. Cl. D18—55

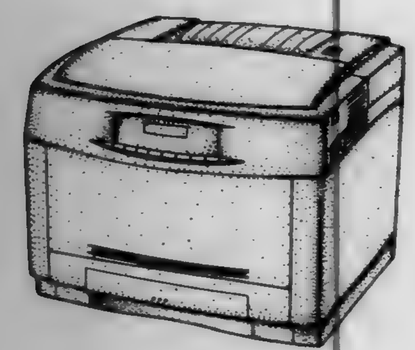

388,456
ELECTRONIC CALCULATOR HAVING THE FUNCTIONS OF TELEPHONE BOOK, ADDRESS BOOK, CALENDAR, SCHEDULE BOOK AND MEMO BOOK
Kenji Takahata, Hino, and Yuji Ohki, Tokyo, both of Japan, assignors to Casio Computer Co., Ltd., Tokyo, Japan
Filed Jun. 24, 1996, Ser. No. 56,115
Term of patent 14 years
LOC (6) Cl. 18 - *01*
U.S. Cl. D18—2

388,457
PHOTO ALBUM VIDEO CASSETTE HOLDER
Linda Lee Wagner, 4129 Cornwallis Dr. #101, Virginia Beach, Va. 23452
Filed Jun. 3, 1996, Ser. No. 55,293
Term of patent 14 years
LOC (6) Cl. 19 - *04*
U.S. Cl. D19—26

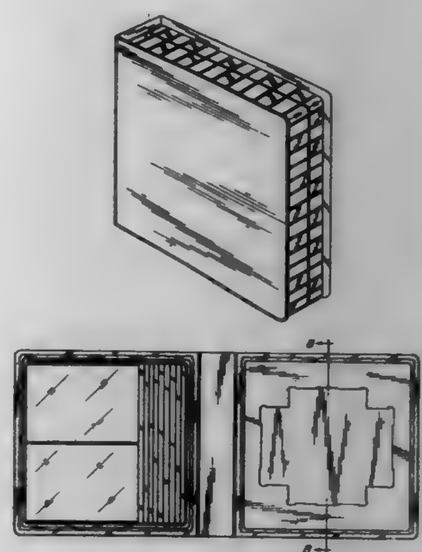

388,458
WRITING PEN WITH A BASE
Shun Takemura, Torrance, Calif., assignor to Itoya of America, Ltd., Torrance, Calif.
Continuation-in-part of Ser. No. 53,489, Apr. 23, 1996, Pat. No. Des. 377,051. This application Dec. 3, 1996, Ser. No. 62,912
Term of patent 14 years
LOC (6) Cl. 19 - *06*
U.S. Cl. D19—36

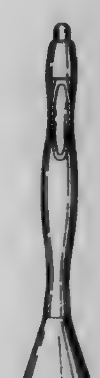

388,459
MULTI-PURPOSE INFORMATION CENTER
Douglas M. Jack, Fullerton, Calif., assignor to Day Runner, Inc., Fullerton, Calif.
Filed Nov. 18, 1996, Ser. No. 62,992
Term of patent 14 years
LOC (6) Cl. 19 - *06*
U.S. Cl. D19—52

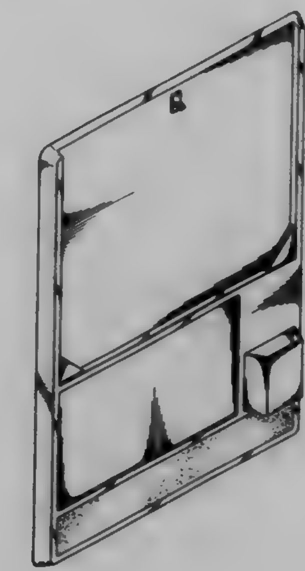

388,460
EDUCATIONAL TOY DOLL
Gloria Gremillion, 540 Eucalyptus, Port Allen, La. 70767
Filed Nov. 28, 1994, Ser. No. 28,351
Term of patent 14 years
LOC (6) Cl. 19 - *07*
U.S. Cl. D19—59

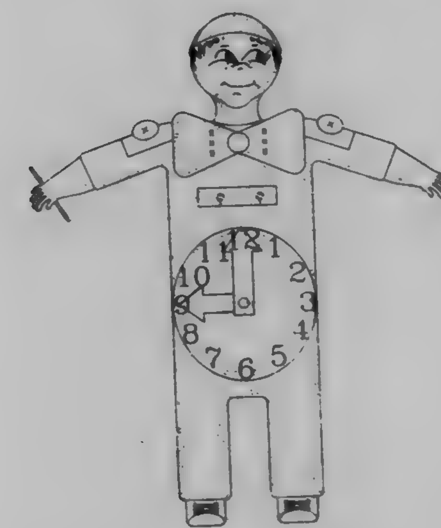

388,461
EDUCATIONAL BOARD AND PIECES THEREFOR
Andrew Frederick Smith, Great Glen, and Gary Nigel Trowell, Chapel Lane, both of United Kingdom, assignors to Invicta Plastics Limited, Leicester, England
Filed Mar. 5, 1996, Ser. No. 51,170
Claims priority, application United Kingdom, Nov. 21, 1995, 2052109
Term of patent 14 years
LOC (6) Cl. 19 - *07*
U.S. Cl. D19—64

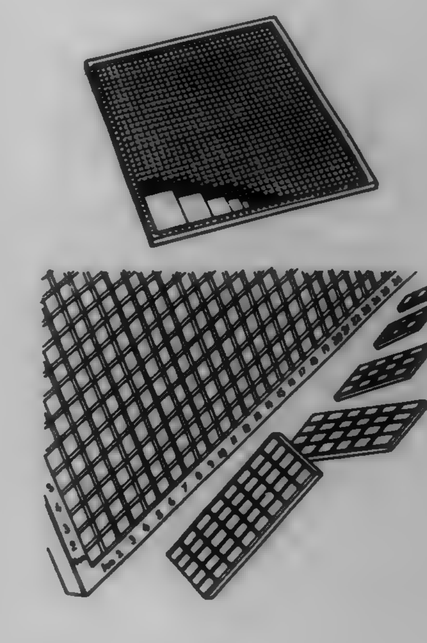

388,462
PAPER CLIP WITH HOOK END AND SQUARE END
Jenq-Pyng Shyu, 26231 Carmel St., Laguna Hills, Calif. 92656
Continuation-in-part of Ser. No. 378,958, Jan. 26, 1995. This application Jul. 5, 1996, Ser. No. 56,664
Term of patent 14 years
LOC (6) Cl. 19 - *02*
U.S. Cl. D19—65

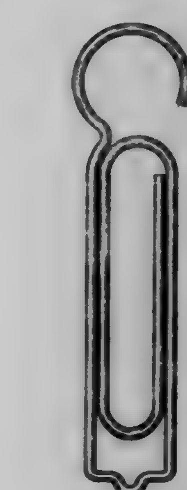

388,463
CLIPBOARD WITH PADDED WRITING SURFACE
Patrick H. Sullins, 20408 Villa Vera, Arlington, Tarrant County, Tex. 76017, and Robert D. Sullins, 6412 Springfield Dr., Arlington, Tarrant County, Tex. 76016
Filed Nov. 12, 1996, Ser. No. 62,209
Term of patent 14 years
LOC (6) Cl. 19 - *02*
U.S. Cl. D19—88

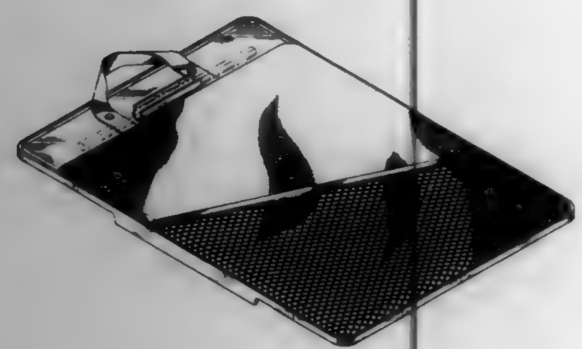

388,464
COMBINED HOLDER FOR AN INK PEN AND TALLY CARD
Barbara Najbart, 10511 Najbart Estates Dr., St. Louis, Mo. 63128
Filed Jun. 5, 1996, Ser. No. 55,324
Term of patent 14 years
LOC (6) Cl. 19 - *06*
U.S. Cl. D19—78

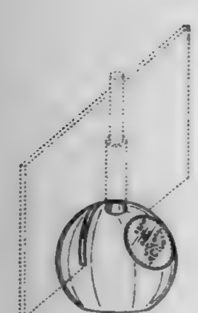

388,465
DESKTOP VERTICAL FILE ASSEMBLY
Aimee J. Markelz, Chicago, and Charles E. Bain, West Dundee, both of Ill., assignors to Sterling Plastics Co., Madison, Wis.
Continuation-in-part of Ser. No. 656,161, May 28, 1996. This application Aug. 27, 1996, Ser. No. 58,906
Term of patent 14 years
LOC (6) Cl. 19 - *02*
U.S. Cl. D19—90

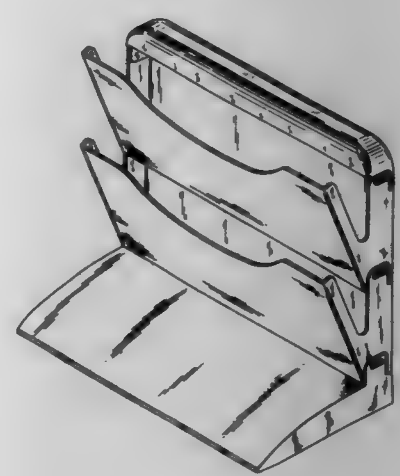

388,466
POPCORN VENDING MACHINE
Mitchell G. Yurchak, 52 Aberfoyle Place, N.E., Calgary, Alberta, Canada, T2A 6W7
Filed Aug. 22, 1996, Ser. No. 58,778
Term of patent 14 years
LOC (6) Cl. 20 - *01*
U.S. Cl. D20—1

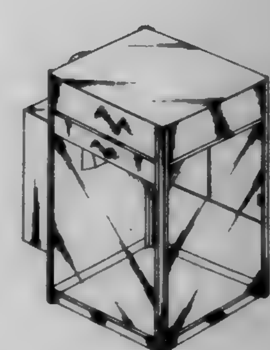

388,467
LABELING DEVICE FOR A COFFEE MAKER
Nicholas Caciello, 1449 Briergate, Naperville, Ill. 60563
Filed Mar. 28, 1996, Ser. No. 52,343
Term of patent 14 years
LOC (6) Cl. 20 - *03*
U.S. Cl. D20—43

388,468
PLACARD HOLDER
Kenneth J. Rife, N3181 Evergreen Rd., Lake Geneva, Wis. 53147
Filed Nov. 15, 1996, Ser. No. 62,448
Term of patent 14 years
LOC (6) Cl. 20 - *02*
U.S. Cl. D20—43

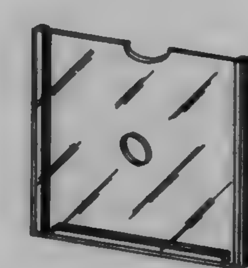

388,469
ELECTRONIC GAME HOUSING
Robert M. Dickenson, Henderson; Richard Jay Schneider, Las Vegas; Joseph Wesley Cole, Las Vegas, and Linn A. McKay, Las Vegas, all of Nev., assignors to Casino Data Systems, Las Vegas, Nev.
Filed Mar. 25, 1996, Ser. No. 52,217
Term of patent 14 years
LOC (6) Cl. 21 - *01*
U.S. Cl. D21—13

388,470
AMUSEMENT APPARATUS BACKBOX
William J. Stringfellow, Barrington, Ill., assignor to Genesis, Inc., Roselle, Ill.
Filed Oct. 2, 1996, Ser. No. 60,621
Term of patent 14 years
LOC (6) Cl. 20 - *03*
U.S. Cl. D21—13

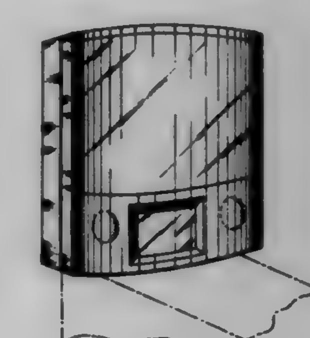

388,471
GAME BOARD
Emerson C. Abrego, 15 Eva Road, Apt. #1502, Etobicoke, Ontario, Canada, M9C-4W3
Filed Mar. 24, 1995, Ser. No. 36,694
Term of patent 14 years
LOC (6) Cl. 21 - *01*
U.S. Cl. D21—34

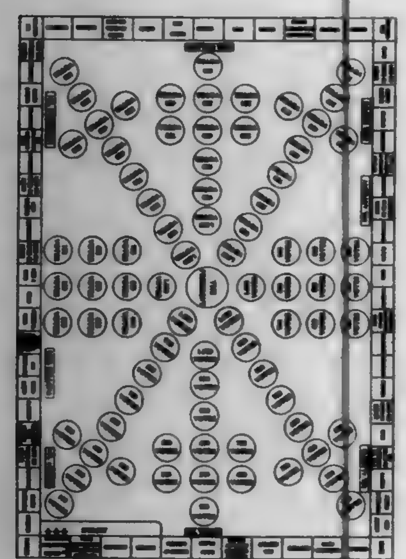

388,472
SOUND AND LIGHT BOX FOR A TOY
Soo Dong Kim, 3641 Nelson Pl., Fullerton, Calif. 92631
Filed Aug. 13, 1996, Ser. No. 58,601
Term of patent 14 years
LOC (6) Cl. 21 - *01*
U.S. Cl. D21—64

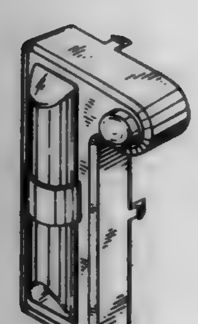

388,473
CHILDREN'S CANOPY WAGON
Antonio J. Pasin, Chicago, Ill., and James Brian Easley, Mound, Minn., assignors to Radio Flyer, Inc., Chicago, Ill.
Filed Sep. 3, 1996, Ser. No. 59,066
Term of patent 14 years
LOC (6) Cl. 21 - *01*
U.S. Cl. D21—71

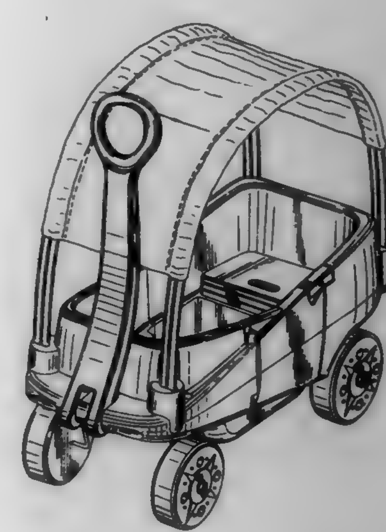

388,474
TOY HELICOPTER
Wong Chung Lun, Kowloon, Hong Kong, assignor to Fu Hong Industries Limited, Mongkok Kln, Hong Kong
Filed Jul. 18, 1996, Ser. No. 57,165
Term of patent 14 years
LOC (6) Cl. 21 - *01*
U.S. Cl. D21—87

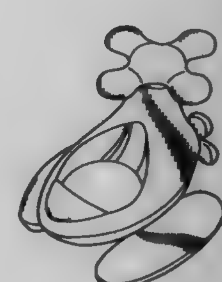

388,475
LARGE MULTIPURPOSE GEAR FOR CONSTRUCTION TOY SET
Joel I. Glickman, Huntingdon Valley, Pa., assignor to Connector Set Limited Partnership, Hatfield, Pa.
Filed Sep. 30, 1996, Ser. No. 60,458
Term of patent 14 years
LOC (6) Cl. 21 - *01*
U.S. Cl. D21—108

388,476
TOY ANIMAL
Jacob Nielsen, Copenhagen; Lone Bjørnskov-Bartholdy, Haslev, and Per Steen Nielsen, Hvidovre, all of Denmark, assignors to Interlego AG, Baar, Switzerland
Filed Sep. 17, 1996, Ser. No. 59,811
Term of patent 14 years
LOC (6) Cl. 21 - *01*
U.S. Cl. D21—148

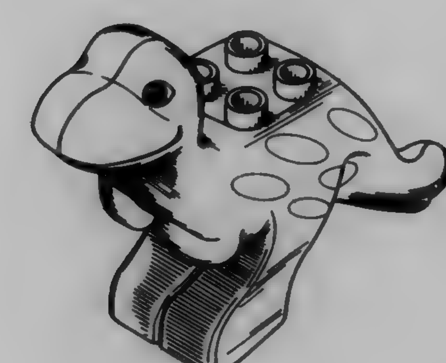

388,477
TOY ANIMAL
Jacob Nielsen, Copenhagen; Lone Bjørnskov-Bartholdy, Haslev, and Per Steen Nielsen, Hvidovre, all of Denmark, assignors to Interlego AG, Baar, Switzerland
Filed Sep. 17, 1996, Ser. No. 59,821
Term of patent 14 years
LOC (6) Cl. 21 - *01*
U.S. Cl. D21—148

388,478
TOY ANIMAL
Jacob Nielsen, Copenhagen; Lone Bjørnskov-Bartholdy, Haslev, and Per Steen Nielsen, Hvidovre, all of Denmark, assignors to Interlego AG, Baar, Switzerland
Filed Sep. 17, 1996, Ser. No. 59,822
Term of patent 14 years
LOC (6) Cl. 21 - *01*
U.S. Cl. D21—148

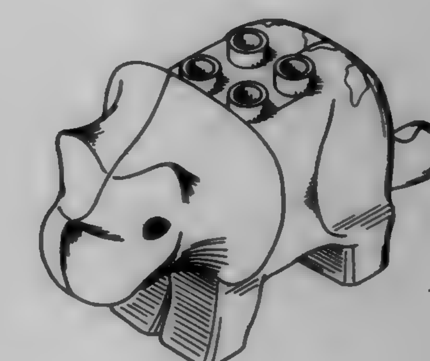

388,479
GIRAFFE ANIMAL TOY
Jean-Paul Allegre, Saint-Etienne, France, assignor to Allegre Puericulture Hygience, France
Filed Dec. 14, 1995, Ser. No. 47,924
Claims priority, application France, Jun. 14, 1995, 953.397
Term of patent 14 years
LOC (6) Cl. 21 - *01*
U.S. Cl. D21—164

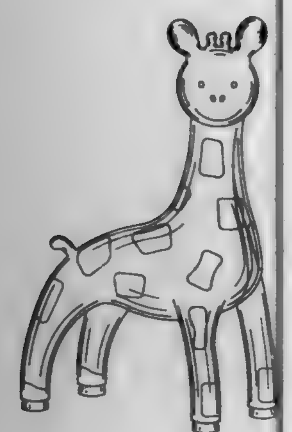

388,480
TOY BABY DOLL
Hanne Toft, Egtved, Denmark, assignor to Interlego AG, Baar, Switzerland
Filed Sep. 17, 1996, Ser. No. 59,825
Term of patent 14 years
LOC (6) Cl. 21 - *01*
U.S. Cl. D21—166

388,481
EXERCISER
Daniel Ashcraft, Torrance; Deanna Griffith, Long Beach, and Kurt Solland, Redondo Beach, all of Calif., assignors to SK Productions, L.L.C., Los Angeles, Calif.
Filed May 20, 1996, Ser. No. 54,702
Term of patent 14 years
LOC (6) Cl. 21 - *02*
U.S. Cl. D21—196

388,482
GOLF TEE
Genaro Fragoso, Box 7-3480, Tarleton Station, Stephenville, Tex. 76402
Filed Jun. 27, 1996, Ser. No. 56,382
Term of patent 14 years
LOC (6) Cl. 21 - *02*
U.S. Cl. D21—208

388,483
GOLF CLUB DRIVER HEAD
Steve Mahaffey, Hampden, and Tom Greene, Monson, both of Mass., assignors to Lisco, Inc., Tampa, Fla.
Filed Jan. 25, 1996, Ser. No. 49,434
Term of patent 14 years
LOC (6) Cl. 21 - *02*
U.S. Cl. D21—214

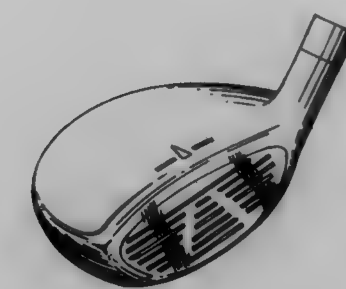

388,484
GOLF CLUB
Cort English, 46 Santa Ana Ave., Clovis, Calif. 93612
Filed Aug. 26, 1996, Ser. No. 59,721
Term of patent 14 years
LOC (6) Cl. 21 - *02*
U.S. Cl. D21—219

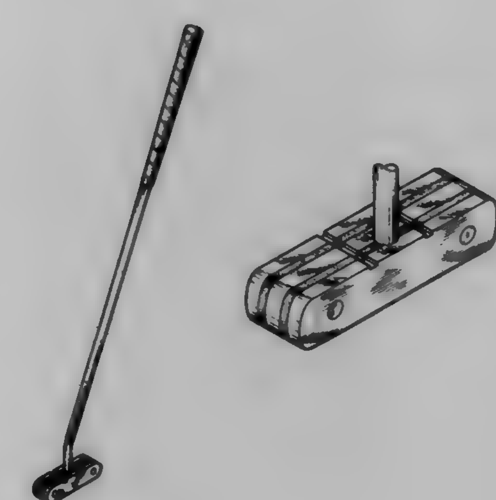

388,485
GOLF PUTTER HEAD
Byron Morgan, and John Ortega, both of 21574 Newland St., Huntington Beach, Calif. 92646
Filed Nov. 6, 1996, Ser. No. 62,032
Term of patent 14 years
LOC (6) Cl. 21 - *02*
U.S. Cl. D21—219

388,486
IRON-TYPE GOLF CLUB HEAD
Steve Mahaffey, Hampden, Mass., assignor to Lisco, Inc., Tampa, Fla.
Filed Jul. 25, 1996, Ser. No. 57,468
Term of patent 14 years
LOC (6) Cl. 21 - *02*
U.S. Cl. D21—220

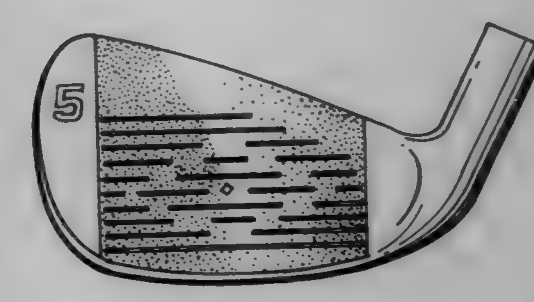

388,487
WEDGE-TYPE GOLF CLUB HEAD
Jeffrey D. Sheets, Wilbraham, Mass., assignor to Lisco, Inc., Tampa, Fla.
Filed Jul. 25, 1996, Ser. No. 57,483
Term of patent 14 years
LOC (6) Cl. 21 - *02*
U.S. Cl. D21—219

388,488
ANGLED HOSEL ADAPTED FOR A GOLF CLUB
Don T. Cameron, Carlsbad, Calif., assignor to Acushnet Company, Fairhaven, Mass.
Continuation-in-part of Ser. No. 51,892, Mar. 19, 1996. This application Apr. 8, 1996, Ser. No. 55,720
The portion of the term of this patent subsequent to Jul. 29, 2011, has been disclaimed.
Term of patent 14 years
LOC (6) Cl. 21 - *02*
U.S. Cl. D21—221

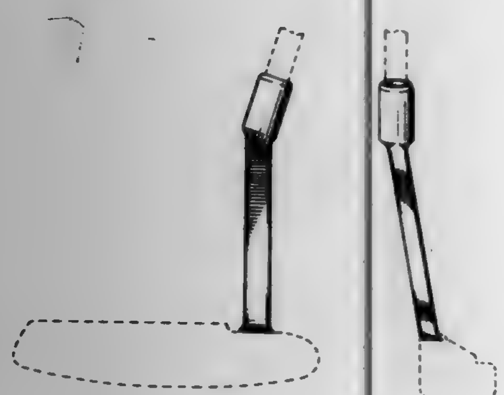

388,489
FLOAT
Marek Sikorski, Mississauga, Canada, assignor to Industrial Thermo Polymers Limited, Brampton, Canada
Filed Dec. 23, 1996, Ser. No. 64,133
Term of patent 14 years
LOC (6) Cl. 12 - *06*
U.S. Cl. D21—237

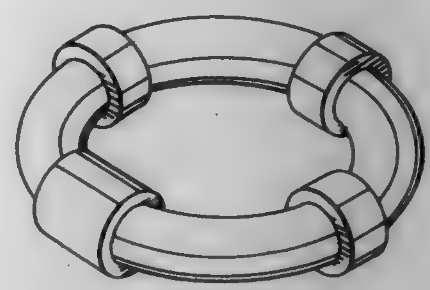

388,490
FLOAT
Marek Sikorski, Mississauga, Canada, assignor to Industrial Thermo Polymers Limited, Brampton, Canada
Filed Dec. 23, 1996, Ser. No. 64,134
Term of patent 14 years
LOC (6) Cl. 12 - *06*
U.S. Cl. D21—237

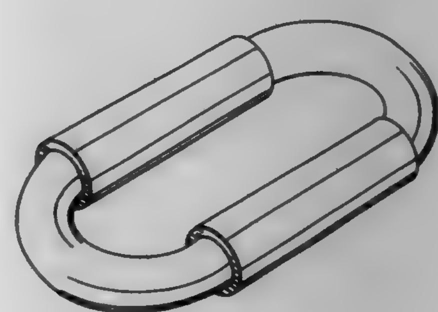

388,491
FLOAT
Marek Sikorski, Ontario, Canada, assignor to Industrial Thermo Polymers Limited, Brampton, Canada
Filed Dec. 23, 1996, Ser. No. 64,135
Term of patent 14 years
LOC (6) Cl. 12 - *06*
U.S. Cl. D21—237

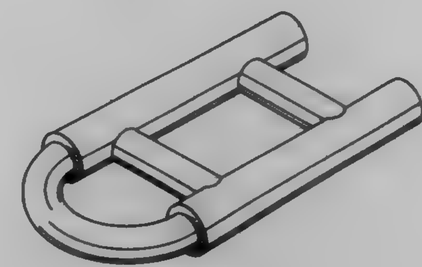

388,492
FLOAT
Marek Sikorski, Mississauga, Canada, assignor to Industrial Thermo Polymers Limited, Brampton, Canada
Filed Dec. 23, 1996, Ser. No. 64,136
Term of patent 14 years
LOC (6) Cl. 12 - *06*
U.S. Cl. D21—237

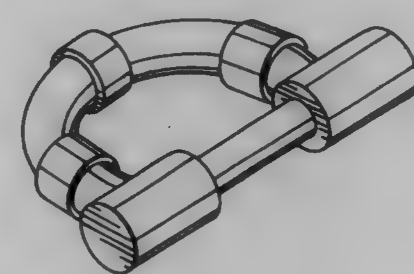

388,493
LIFE JACKET WITH INFLATABLE MARKER
David L. Summers, 3091M. 72 Rd. E., Harrisville, Mich. 48740
Filed Dec. 8, 1995, Ser. No. 47,608
Term of patent 14 years
LOC (6) Cl. 29 - *02*
U.S. Cl. D21—238

388,494
INFLATABLE FRAME STRUCTURE
Chang Hsiung Liu, No. 8, Shang 4 Fu, Yang-Mei Town, Tao-Yuan Hsieh, Taiwan
Filed Aug. 2, 1996, Ser. No. 57,862
Term of patent 14 years
LOC (6) Cl. 21 - *02*
U.S. Cl. D21—254

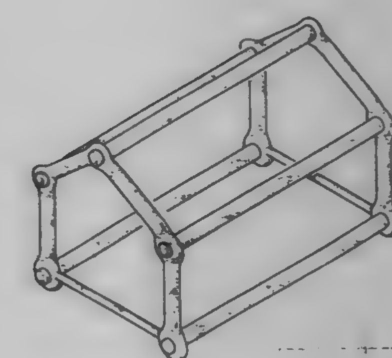

388,495
FISHING LURE RATTLE
Don Gentry, Carterville, Ill., assignor to Lunker Lure Products, Inc., Carterville, Ill.
Filed Feb. 5, 1996, Ser. No. 49,971
Term of patent 14 years
LOC (6) Cl. 22 - *05*
U.S. Cl. D22—126

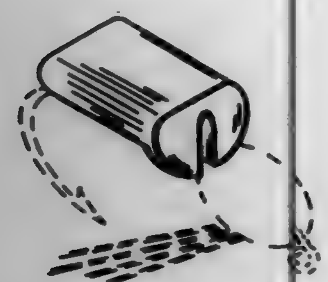

388,496
FLOATING JIG
Craig M. Reiger, West Bend, Wis., assignor to Thomas A. Hafeman, and John H. Hafeman, both of West Bend, Wis.
Filed Jun. 17, 1996, Ser. No. 55,922
Term of patent 14 years
LOC (6) Cl. 22 - *05*
U.S. Cl. D22—126

388,497
SPINNING REEL FOR FISHING
Masakazu Iwabuchi, Sakai, Japan, assignor to Shimano, Inc., Japan
Filed Nov. 19, 1996, Ser. No. 62,581
Claims priority, application Japan, May 21, 1996, 8-14589
Term of patent 14 years
LOC (6) Cl. 22 - *05*
U.S. Cl. D22—141

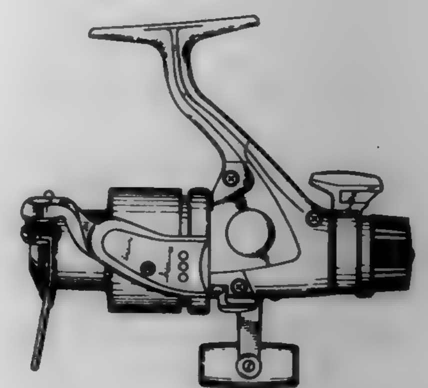

388,498
ROD ATTACHABLE SAFETY COVERING FOR FISHING HOOK
Joseph Ellis Hamilton, 6116 62nd Pl., Riverdale, Md. 20737
Filed Nov. 6, 1996, Ser. No. 62,056
Term of patent 14 years
LOC (6) Cl. 22 - *05*
U.S. Cl. D22—144

388,499
SIDE ELEMENT OF A SHOE UPPER
Robert J. Lucas, Portland, Oreg., assignor to Nike, Inc., Beaverton, Oreg.
Continuation of Ser. No. 50,823, Feb. 27, 1996, abandoned. This application Jul. 26, 1996, Ser. No. 57,532
Term of patent 14 years
LOC (6) Cl. 02 - *99*
U.S. Cl. D2—972

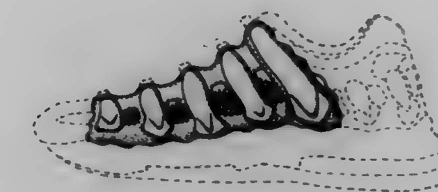

388,500
WATER FILTER CARTRIDGE
Thomas H. Burchard, Winchester; Youngmihn Kim, Lexington, both of Mass., and Daniel C. Buchner, Lorain, Ohio, assignors to Moen Incorporated, North Olmsted, Ohio
Filed Dec. 2, 1996, Ser. No. 63,181
Term of patent 14 years
LOC (6) Cl. 23 - *01*
U.S. Cl. D23—209

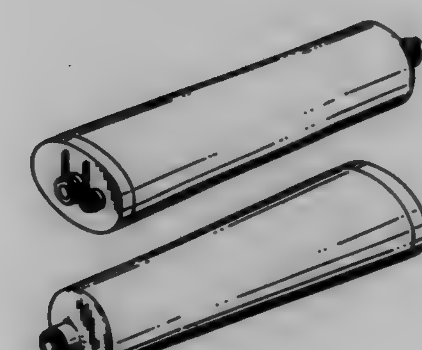

388,501
SPRAY NOZZLE
Franco Clivio, Erlenbach, Switzerland, assignor to Gardena Kress + Kastner GmbH, Ulm, Germany
Filed Feb. 12, 1996, Ser. No. 50,233
Claims priority, application Germany, Aug. 10, 1995, M 95 06 385.4
Term of patent 14 years
LOC (6) Cl. 23 - *01*
U.S. Cl. D23—213

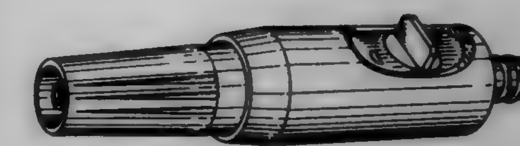

388,502
MULTIPLE ORIFICE NOZZLE SPRINKLER
Carl L. C. Kah, III, 12166 W. End, North Palm Beach, Fla. 33408
Filed Nov. 25, 1996, Ser. No. 63,067
Term of patent 14 years
LOC (6) Cl. 23 - *01*
U.S. Cl. D23—214

388,503
RUBBER RAFT AIR MATTRESS PUMP ADAPTOR
Chris Fountain, 756 Panther La., South Lake Tahoe, Calif. 96150
Filed Aug. 16, 1996, Ser. No. 58,530
Term of patent 14 years
LOC (6) Cl. 15 - *02*
U.S. Cl. D23—231

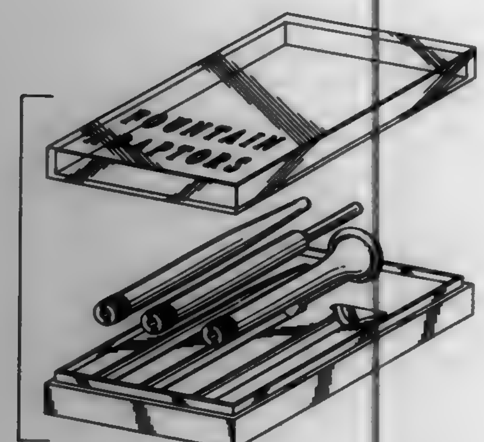

388,504
ELECTROMAGNETIC VALVE
Bunya Hayashi; Shinji Miyazoe, and Makoto Ishikawa, all of Yawara-mura, Japan, assignors to SMC Corporation, Tokyo, Japan
Filed Feb. 9, 1996, Ser. No. 50,179
Claims priority, application Japan, Aug. 11, 1995, 7-23576
Term of patent 14 years
LOC (6) Cl. 23 - *01*
U.S. Cl. D23—233

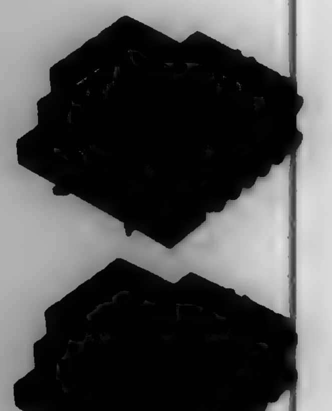

388,505
FAUCET
Jonathan Oswaks, Westlake Village; Jean-Pierre Durand, Los Angeles, and Peter Y. Carris, Pasadena, all of Calif., assignors to Emhart Inc., Newark, Del.
Filed Aug. 9, 1996, Ser. No. 58,204
The portion of the term of this patent subsequent to Dec. 9, 2011, has been disclaimed.
Term of patent 14 years
LOC (6) Cl. 23 - *01*
U.S. Cl. D23—238

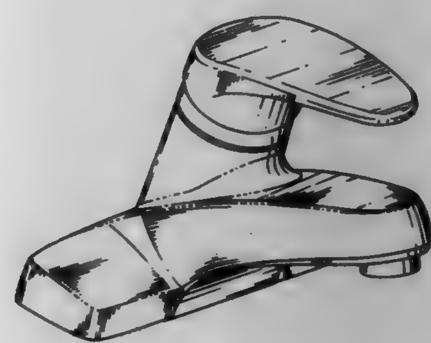

388,506
FAUCET HANDLE
Mark E. Donahue, Richmond Heights; Carolyn J. Duffield, Elyria; Vance M. Johnson, Amherst; James J. McElroy, Westlake, and Nagib Nasr, Parma Heights, all of Ohio, assignors to Moen Incorporated, North Olmsted, Ohio
Filed Dec. 9, 1996, Ser. No. 63,509
Term of patent 14 years
LOC (6) Cl. 23 - *01*
U.S. Cl. D23—252

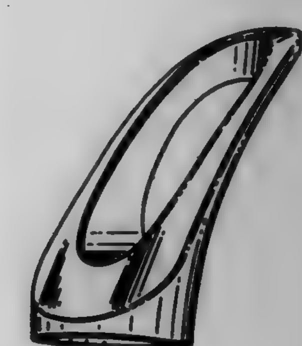

388,507
EMERGENCY WASH BASIN
Albert G. Gurries, II, Reno, Nev., assignor to Haws Company, Sparks, Nev.
Filed Sep. 3, 1996, Ser. No. 59,117
Term of patent 14 years
LOC (6) Cl. 23 - *02*
U.S. Cl. D23—284

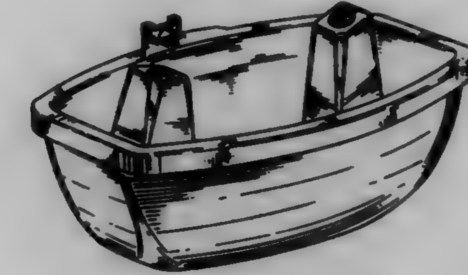

388,508
CERAMIC ELECTRIC HEATER IN THE FORM OF A CUP SEAT
Ming Jen Hsiao, No. 909, Cheng Fong Rd., Tou Feng, Miao Li, Taiwan
Filed Sep. 30, 1996, Ser. No. 60,550
Term of patent 14 years
LOC (6) Cl. 23 - *03*
U.S. Cl. D23—328

388,509
CERAMIC ELECTRIC HEATER IN THE FORM OF A CUP SEAT
Ming Jen Hsiao, No. 909, Cheng Fong Rd., Tou Feng, Miao Li, Taiwan
Filed Sep. 30, 1996, Ser. No. 60,549
Term of patent 14 years
LOC (6) Cl. 23 - *03*
U.S. Cl. D23—332

388,510
AIR TREATMENT UNIT WITH REMOVABLE FEET THEREFOR
Bradley G. Rick, Belmont, Mich.; Jonathan Guerra, San Francisco, Calif.; Seiji Murakami, Kanagawa, and Kenichi Toume, Tokyo, both of Japan, assignors to Amway Corporation, Ada, Mich.
Filed Jun. 11, 1996, Ser. No. 55,684
Term of patent 14 years
LOC (6) Cl. 23 - *04*
U.S. Cl. D23—355

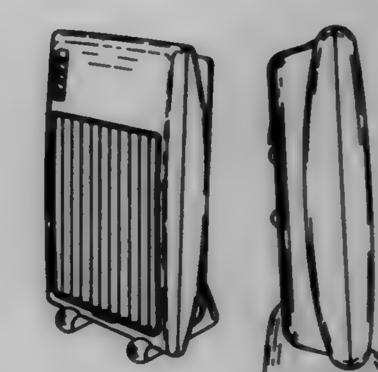

388,511
HUMIDIFIER HOUSING UNIT

Rodney Jane', Westboro, Mass.; Jui-Shang Wang, Taipei, Taiwan; Stanley Greseas, Homewood, and Gregory Holderfield, Palatine, both of Ill., assignors to Duracraft Corp., Southborough, Mass.

Filed Oct. 30, 1995, Ser. No. 45,815
Term of patent 14 years
LOC (6) Cl. 23 - *04*

U.S. Cl. D23—358

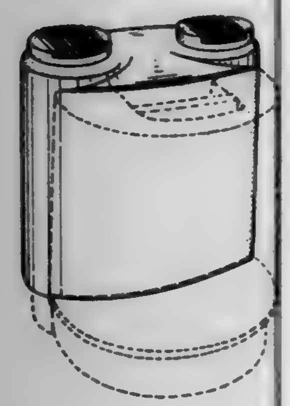

388,512
CHIMNEY TOP

Daryl J. Brummer, 1704 W. Lake Shore Dr., Delafield, Wis. 53018

Filed Jun. 7, 1995, Ser. No. 39,903
Term of patent 14 years
LOC (6) Cl. 23 - *04*

U.S. Cl. D23—374

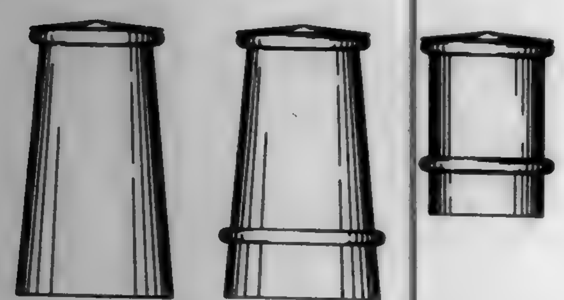

388,513
COMBINED BLADE MEDALLION AND SUPPORT ARM FOR A CEILING FAN

Jan Jaspers-Fayer, Idyllwild, Calif., assignor to Minka Lighting Inc., Corona, Calif.

Filed Nov. 8, 1996, Ser. No. 62,157
Term of patent 14 years
LOC (6) Cl. 23 - *04*

U.S. Cl. D23—411

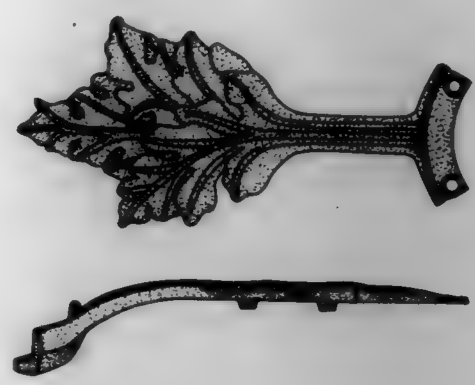

388,514
PROTECTIVE MASK

Joseph T. Johnson, 8028 Regent Park La., Charlotte, N.C. 28210

Filed Feb. 10, 1997, Ser. No. 66,267
Term of patent 14 years
LOC (6) Cl. 28 - *01*

U.S. Cl. D24—105

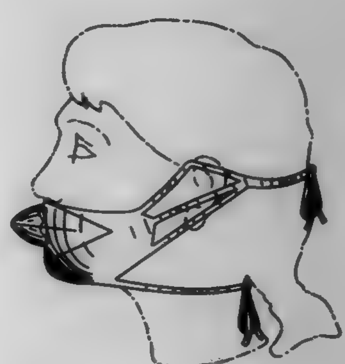

388,515
COMBINED LAPAROSCOPIC TOOL HOLDER AND POSITIONER

John R. Bookwalter, Brattleboro, Vt., and David T. Adler, Manhasset, N.Y., assignors to Flexbar Machine Corp., Islandia, N.Y.

Continuation of Ser. No. 31,599, Nov. 29, 1994, abandoned, which is a continuation of Ser. No. 930,909, Aug. 14, 1992, abandoned. This application May 30, 1996, Ser. No. 55,051
Term of patent 14 years
LOC (6) Cl. 24 - *01*

U.S. Cl. D24—138

388,516
SURGICAL INSTRUMENT

Stuart Leslie Devlin, Southbourne Court, Copsale, West Sussex RH13 7DJ, United Kingdom

Filed Aug. 21, 1996, Ser. No. 59,129
Claims priority, application United Kingdom, Jun. 12, 1996, 3056952
Term of patent 14 years
LOC (6) Cl. 24 - *02*

U.S. Cl. D24—143

388,517
ORTHOPAEDIC CAST COVER

Vivian Figueroa, 45-79 163rd St., Flushing, N.Y. 11358

Filed Nov. 18, 1996, Ser. No. 62,856
Term of patent 14 years
LOC (6) Cl. 24 - *04*

U.S. Cl. D24—190

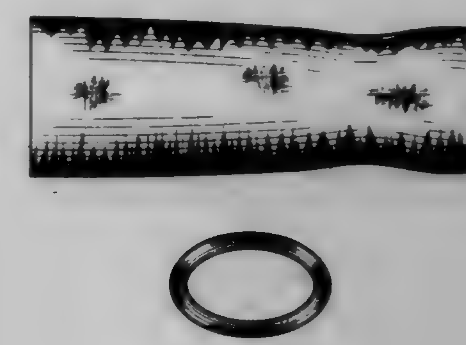

388,518
MASSAGE DEVICE

Robin Haynes, P.O. Box 5571, Auburn, Calif. 95603

Filed Jan. 10, 1997, Ser. No. 64,785
Term of patent 14 years
LOC (6) Cl. 24 - *04*

U.S. Cl. D24—214

388,519
POCKET-SIZE SANITATION TEST KIT
Richard Skiffington, Everett, and Eliezer Zomer, Newton, both of Mass., assignors to Charm Sciences, Inc., Malden, Mass.
Continuation-in-part of Ser. No. 45,558, Oct. 24, 1995, abandoned. This application Apr. 2, 1996, Ser. No. 52,316
Term of patent 14 years
LOC (6) Cl. 24 - *02*
U.S. Cl. D24—223

388,520
ADJUSTABLE SWIMMING POOL LADDER
Leland J. Hoffman, Naples, Fla., assignor to Hercules Products, Inc., Brunswick, Ohio
Filed May 7, 1996, Ser. No. 54,145
Term of patent 14 years
LOC (6) Cl. 25 - *04*
U.S. Cl. D25—64

388,521
WINDOW COMPONENT EXTRUSION
Peggy O. Porter; Michael T. Chaney, both of Monroe, Ohio, and Harold Kuritzky, Hillside, N.J., assignors to Dayton Technologies, Inc., Monroe, Ohio
Filed Nov. 15, 1996, Ser. No. 63,354
Term of patent 14 years
LOC (6) Cl. 25 - *01*
U.S. Cl. D25—124

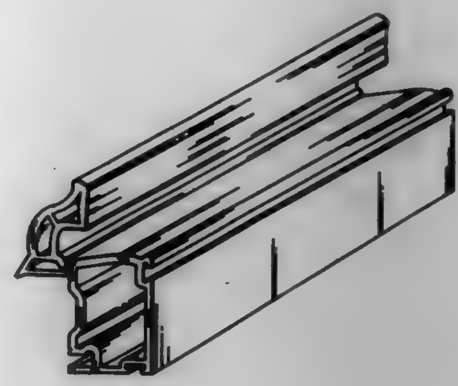

388,522
VOTIVE CANDLE BOX
Italo Pietrantoni, Moore, S.C., assignor to Greenleaf, Inc., Spartanburg, S.C.
Filed May 23, 1996, Ser. No. 54,830
Term of patent 14 years
LOC (6) Cl. 26 - *01*
U.S. Cl. D26—9

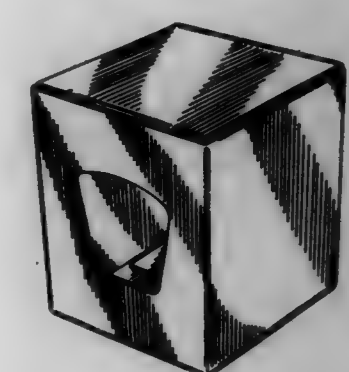

388,523
LIGHT FIXTURE FOR RECREATIONAL VEHICLES
Barry G. Austin, Marshall, Mich., assignor to Tekonsha Engineering Company, Tekonsha, Mich.
Filed Jan. 3, 1997, Ser. No. 64,504
Term of patent 14 years
LOC (6) Cl. 26 - *06*
U.S. Cl. D26—28

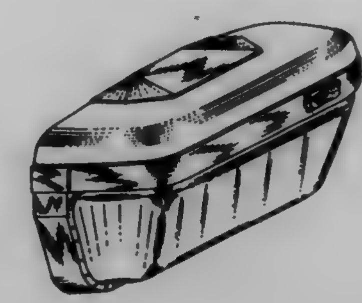

388,524
FLASHLIGHT
Shoei-Shuh Shiau, No. 10, Alley 1, Lane 551, Sec. 1, Wan-Shou Rd., Guei-Shan Hsiang, Tao-Yuan Hsien, Taiwan
Filed Sep. 30, 1996, Ser. No. 60,476
Term of patent 14 years
LOC (6) Cl. 26 - *02*
U.S. Cl. D26—43

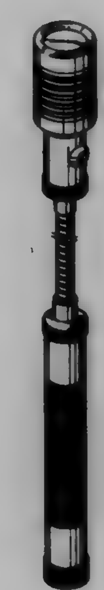

388,525
LIGHT
Ross Lowell, Stamford, Conn.; Marvin Seligman, Teaneck, N.J.; Apiruk Pronputhsri, Ratburi THX; Chi Yu, Brooklyn, N.Y., and Brian Ellis, Orange Park, Fla., assignors to Lowel-Light Manufacturing, Inc., Brooklyn, N.Y.
Filed Jan. 17, 1997, Ser. No. 65,058
Term of patent 14 years
LOC (6) Cl. 26 - *03*
U.S. Cl. D26—63

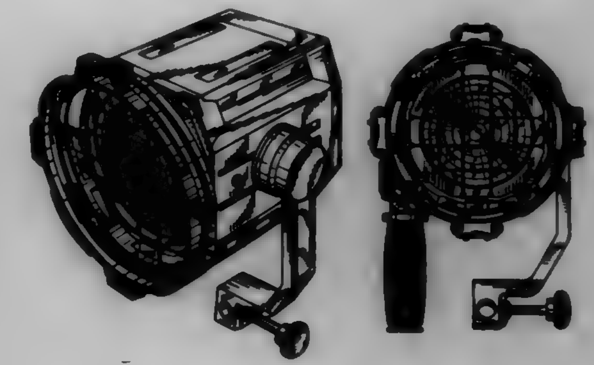

388,526
SNAP-ON PRISM FOR LIGHTING FIXTURE
Douglas Bray, Medford, N.J., assignor to Sea Gull Lighting Products, Inc., Riverside, N.J.
Filed Nov. 8, 1996, Ser. No. 62,163
Term of patent 14 years
LOC (6) Cl. 26 - *05*
U.S. Cl. D26—134

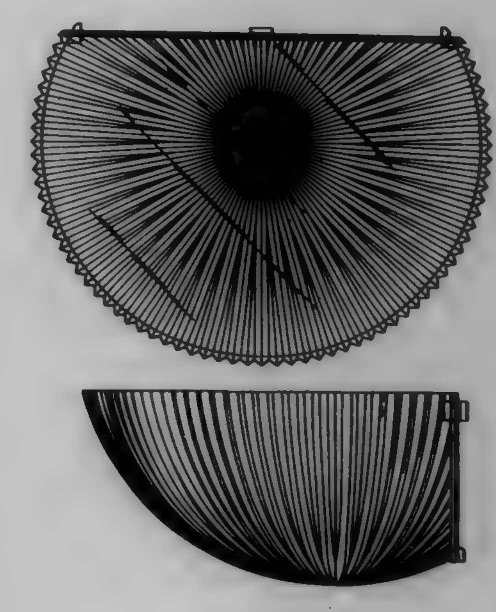

388,527
TABLE LAMP
Brad A. Pressman, 112 N. 3rd St., 3rd Floor, Philadelphia, Pa. 19106
Continuation-in-part of Ser. No. 54,150, May 7, 1996, abandoned. This application Nov. 8, 1996, Ser. No. 62,162
Term of patent 14 years
LOC (6) Cl. 26 - *05*
U.S. Cl. D26—94

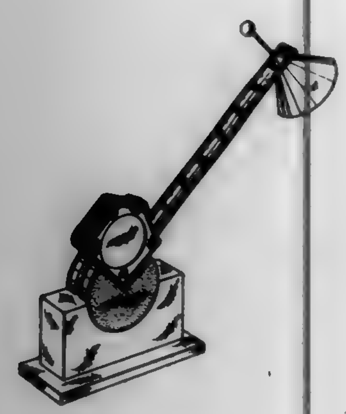

388,528
LAMP
Daniel Ross Shear, 443 Chartley Park Dr., Reisterstown, Md. 21136
Filed Jan. 22, 1996, Ser. No. 49,277
Term of patent 14 years
LOC (6) Cl. 26 - *05*
U.S. Cl. D26—106

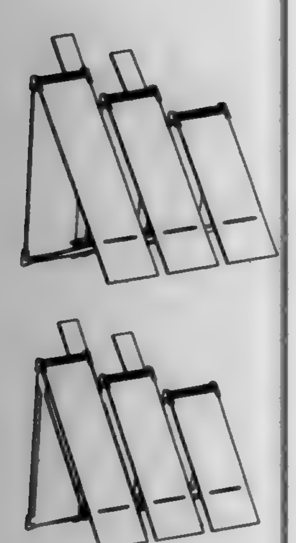

388,529
LAMP SHADE WITH INTERIOR SOLAR CELLS
William Parker, 4400 Alter Rd., Detroit, Mich. 48215
Filed Jul. 17, 1995, Ser. No. 41,536
Term of patent 14 years
LOC (6) Cl. 26 - *05*
U.S. Cl. D26—135

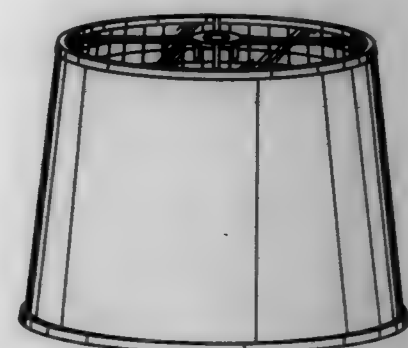

388,530
SET OF FRONT HEADLAMP BEZEL EXTERIOR SURFACE
Ferdinand F. Hellhake, 14308 S.W. Stallion Dr., Beaverton, Oreg. 97008
Filed Feb. 16, 1996, Ser. No. 50,613
Term of patent 14 years
LOC (6) Cl. 26 - *99*
U.S. Cl. D26—139

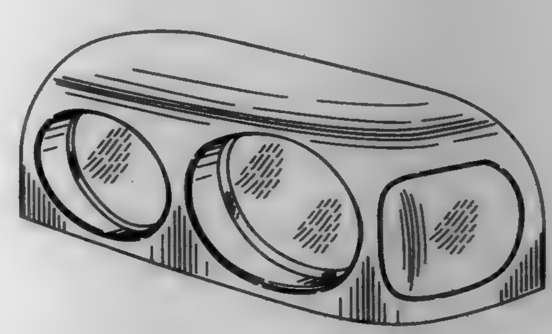

388,531
HOOD FOR COLLECTING SMOKE FROM ASHTRAYS
Neil Ambrosio, Sunrise, Fla.; William Forsythe, Fountain Valley, Calif.; Bruce Hatton, Ramona, Calif.; Robert Keaton, Westminster, Calif., and Larry Kinder, Las Vegas, Nev., assignors to Progressive Games, Inc., Ft. Lauderdale, Fla.
Filed Feb. 16, 1996, Ser. No. 50,407
Term of patent 14 years
LOC (6) Cl. 27 - *03*
U.S. Cl. D27—137

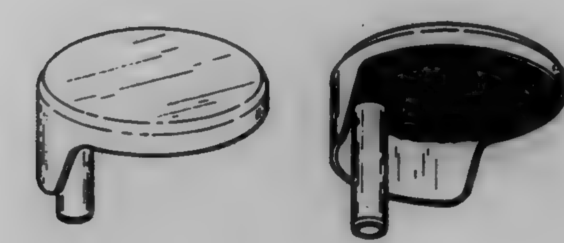

388,532
CIGAR PERFORATOR
Marc H. Wander, 2622 Oakview, Walled Lake, Mich. 48390
Filed Oct. 15, 1996, Ser. No. 60,972
Term of patent 14 years
LOC (6) Cl. 27 - *99*
U.S. Cl. D27—195

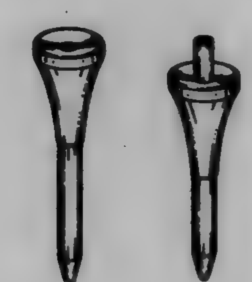

388,533
BEAUTY MASK SHEET FOR NOSE
Tomohiro Uemura, Tokyo, and Koichi Ishida, Funabashi, both of Japan, assignors to Kao Kabushiki Kaisha (Kao Corporation), Tokyo, Japan
Filed Dec. 5, 1996, Ser. No. 63,316
Claims priority, application Japan, Jun. 6, 1996, 8-16390
Term of patent 14 years
LOC (6) Cl. 28 - *02*
U.S. Cl. D28—4

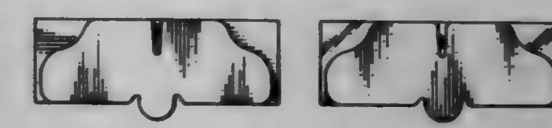

388,534
BEAUTY MASK SHEET FOR NOSE
Tomohiro Uemura, Tokyo, and Koichi Ishida, Funabashi, both of Japan, assignors to Kao Kabushiki Kaisha (Kao Corporation), Tokyo, Japan
Filed Dec. 5, 1996, Ser. No. 63,325
Claims priority, application Japan, Jun. 6, 1996, H08-16309
Term of patent 14 years
LOC (6) Cl. 28 - *02*
U.S. Cl. D28—4

388,535
SKIN CARE APPLICATOR HANDLE
Myra S. Per-Lee, 16136 Avenida Venusto, #2, San Diego, Calif. 92128
Filed Apr. 18, 1995, Ser. No. 37,667
Term of patent 14 years
LOC (6) Cl. 28 - *02*
U.S. Cl. D28—7

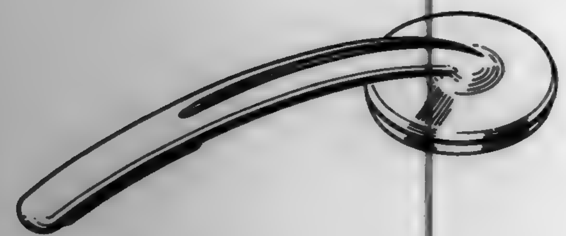

388,536
HAND-HELD RECHARGEABLE MAKEUP AND HAIR COLOR MIXER
Sandra A. Cote, 2 Doe Run La., Stratham, N.H. 03885, assignor to Sandra A. Cote, Stratham, N.H.
Filed Sep. 26, 1995, Ser. No. 44,510
Term of patent 14 years
LOC (6) Cl. 28 - *03*
U.S. Cl. D28—9

388,537
HAIR STYLING DEVICE
Maria Vanessa Jones, New York; Angela Ferguson, Brooklyn, both of N.Y., and Pat Grant Williams, Silver Spring, Md., assignors to Revlon Consumer Products Corporation, New York, N.Y.
Filed Apr. 30, 1996, Ser. No. 53,783
Term of patent 14 years
LOC (6) Cl. 28 - *03*
U.S. Cl. D28—10

388,538
HOT AIR COMB
Albert Johannes Kip, Groningen, Netherlands, assignor to U.S. Philips Corporation, New York, N.Y.
Filed Mar. 22, 1996, Ser. No. 52,456
Claims priority, application Hague Agreement, Oct. 25, 1995, DMA/003110
Term of patent 14 years
LOC (6) Cl. 28 - *03*
U.S. Cl. D28—18

388,539
COMBINED COMB BRUSH AND PICK FOR THE HAIR
Judit Ford, 12406 El Oro Way, Granada Hills, Calif. 91344
Filed Dec. 2, 1996, Ser. No. 63,761
Term of patent 14 years
LOC (6) Cl. 28 - *03*
U.S. Cl. D28—25

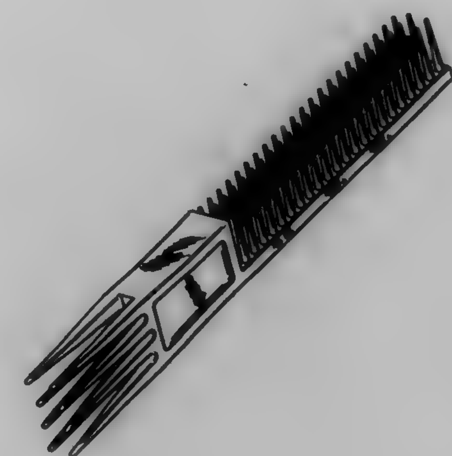

388,540
RAZOR HAVING A ROTATABLE TRIANGULAR HEAD
Haim Ramar, 156 N. Poinsettia Pl., Los Angeles, Calif. 90036
Filed Dec. 4, 1996, Ser. No. 63,282
Term of patent 14 years
LOC (6) Cl. 28 - *03*
U.S. Cl. D28—45

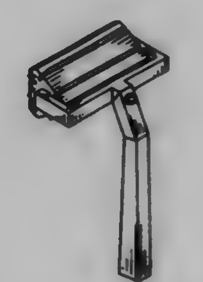

388,541
CURVED HEAD BEARD TRIMMING RAZOR
Nicholas E. Drimmel, 13107 Summertime La., Culver City, Calif. 90230
Filed Jul. 1, 1996, Ser. No. 56,500
Term of patent 14 years
LOC (6) Cl. 28 - *03*
U.S. Cl. D28—46

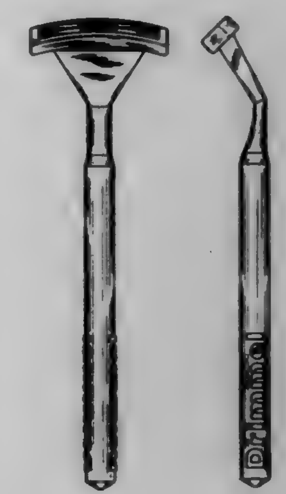

388,542
ELECTRIC SHAVER WITH A BEARD-STYLING ATTACHMENT
Roland Ullmann, Offenbach, Germany, assignor to Braun Aktiengesellschaft, Kronberg, Germany
Filed May 14, 1996, Ser. No. 54,474
Claims priority, application Germany, Nov. 20, 1995, M 95 09 131.9
Term of patent 14 years
LOC (6) Cl. 28 - *03*
U.S. Cl. D28—49

388,543

COMBINED NOSE HAIR TRIMMER AND TOP CAP

Kyoko Eguchi, Kanagawa-ken, and Shinji Yamamoto, Osaka-fu, both of Japan, assignors to Matsushita Electric Works, Ltd., Osaka-fu, Japan

Filed Feb. 18, 1997, Ser. No. 66,496

Term of patent 14 years

LOC (6) Cl. 28 - *03*

U.S. Cl. D28—53

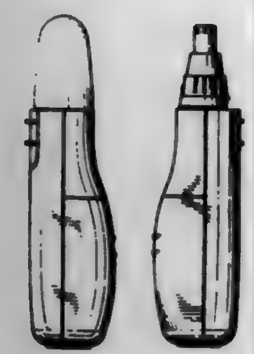

388,544

ARTIFICIAL FINGERNAIL

John Meyerovich, Fox Point, Wis., assignor to European Touch Co., Inc., Milwaukee, Wis.

Division of Ser. No. 56,797, Jul. 9, 1996. This application Jan. 2, 1997, Ser. No. 64,476

Term of patent 14 years

LOC (6) Cl. 28 - *03*

U.S. Cl. D28—56

388,545

TOOL FOR USE IN REMOVING NAIL POLISH FROM FINGER NAILS

Frances Antonopoulos-McIvor, Kent, Wash., assignor to Aquarius II, Inc., Grand Junction, Colo.

Filed Mar. 29, 1996, Ser. No. 53,011

Term of patent 14 years

LOC (6) Cl. 28 - *03*

U.S. Cl. D28—57

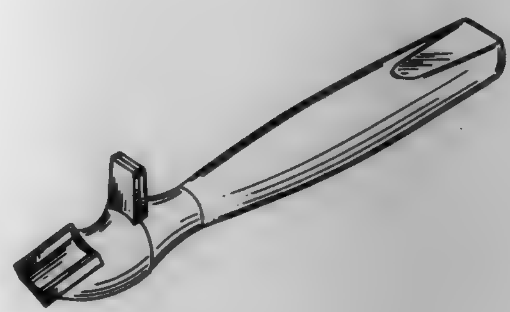

388,546

BATH BRUSH HANDLE

Kathryn King McEntee, Washington, N.C., assignor to Rubbermaid Cleaning Products Inc., Greenville, N.C.

Filed Apr. 26, 1996, Ser. No. 53,645

Term of patent 14 years

LOC (6) Cl. 28 - *03*

U.S. Cl. D28—63

388,547

ATTACHABLE BACK SCRUBBER

Ruth Walls, 78 East Berlin Rd., York Springs, Pa. 17372

Filed Dec. 9, 1996, Ser. No. 63,451

Term of patent 14 years

LOC (6) Cl. 28 - *03*

U.S. Cl. D28—63

388,548

DENTAL FLOSS DISPENSER

Lisa A. Hester, 140 Dunecrest Ave., Monterey, Calif. 93940

Filed Nov. 26, 1996, Ser. No. 62,815

Term of patent 14 years

LOC (6) Cl. 28 - *03*

U.S. Cl. D28—64

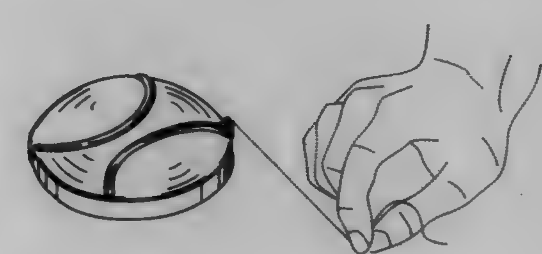

388,549

COSMETIC CASE

Nikos Mouyiaris, 425 E. 58th St., New York, N.Y. 10022, and Sharon Garment, 145 Fourth Ave., New York, N.Y. 10003

Filed Oct. 20, 1995, Ser. No. 46,664

Term of patent 14 years

LOC (6) Cl. 28 - *03*

U.S. Cl. D28—82

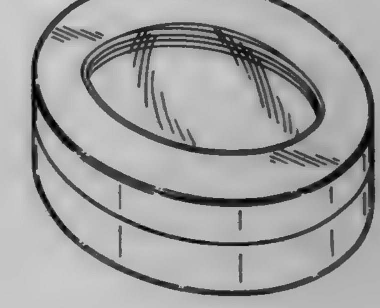

388,550

ABDOMINAL SUPPORT

Christine L. Seering, 6659 Poplar, Box 443, Hamburg, Mich. 48139, and Mona E. Seering, 1818 Blue Gill Ave., Clare, Mich. 48617-9751

Filed Jun. 21, 1996, Ser. No. 56,087

Term of patent 14 years

LOC (6) Cl. 30 - *04*

U.S. Cl. D29—101

388,551
SAFETY HELMET
Tung Feng Lu, 4F, No. 12, Alley 20, Lane 302, Jen Ai Road, Sec. 4, Taipei, Taiwan
Filed Oct. 24, 1995, Ser. No. 4[illegible],595
Term of patent 14 years
LOC (6) Cl. 09 - *03*
U.S. Cl. D29—102

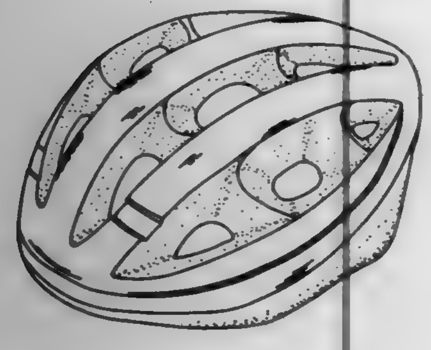

388,552
EAR SHIELD
Vernon P. Weaver, Rte. 1 Box 355, Longview, Tex. 75602
Filed Aug. 12, 1996, Ser. No. 5[illegible],348
Term of patent 14 years
LOC (6) Cl. 29 - *02*
U.S. Cl. D29—112

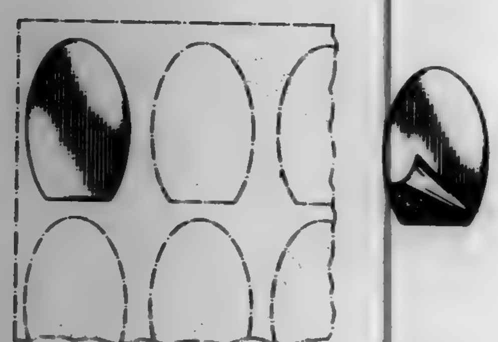

388,553
OVEN MITT
Courtney Sapin, Los Angeles, Calif., assignor to Healthline Products International, Los Angeles, Calif.
Filed Nov. 7, 1995, Ser. No. 46,125
Term of patent 14 years
LOC (6) Cl. 06 - *13*
U.S. Cl. D29—119

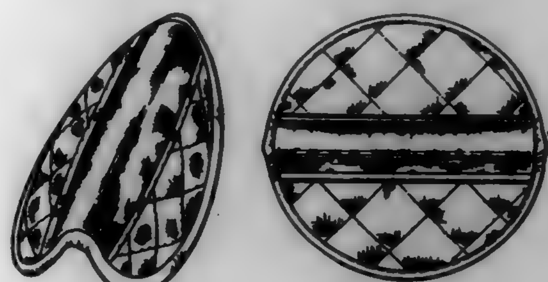

388,554
SUN SLEEVE
John W. Broderick, 660 Crucible Ct., Millersville, Md. 21108
Filed Aug. 9, 1996, Ser. No. 58,651
Term of patent 14 years
LOC (6) Cl. 29 - *02*
U.S. Cl. D29—120

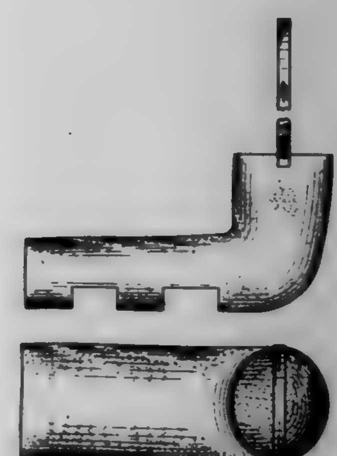

388,555
OUTDOOR CAT SHELTER
Wayne A. Lewis, 245-½ Rte. 2, Cane Fork Rd., Charleston, W. Va. 25314
Filed Oct. 4, 1995, Ser. No. 44,970
Term of patent 14 years
LOC (6) Cl. 30 - *02*
U.S. Cl. D30—108

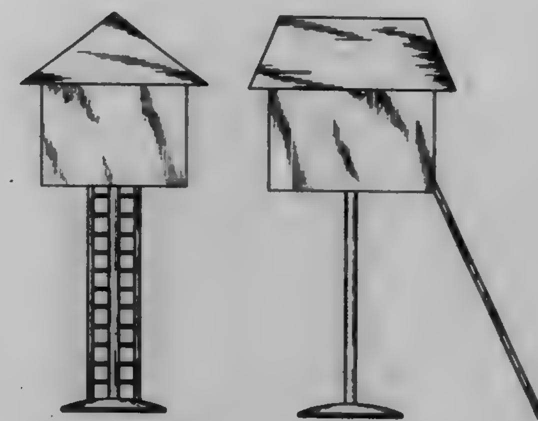

388,556
ROD FOR USE WITH A FEED RESERVOIR
William D. Harmon, 1330 Eagle Mountain North, Box 74, Ellijay, Ga. 30540
Division of Ser. No. 17,386, Jan. 12, 1994, abandoned. This application Feb. 16, 1996, Ser. No. 53,838
Term of patent 14 years
LOC (6) Cl. 30 - *07*
U.S. Cl. D30—121

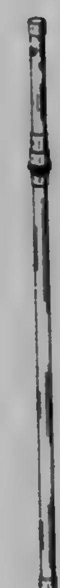

388,557
STIRRUP ADJUSTER
Calvin L. Felkins, P.O. Box 4548, Logan, Utah 84323
Continuation-in-part of Ser. No. 24,963, Jun. 24, 1994, abandoned. This application Apr. 16, 1996, Ser. No. 53,071
The portion of the term of this patent subsequent to Dec. 14, 2007, has been disclaimed.
Term of patent 14 years
LOC (6) Cl. 30 - *04*
U.S. Cl. D30—142

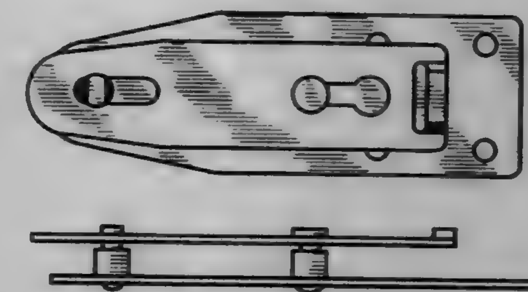

388,558
DOG LEASH
Richard E. Miller, 3345 Reservoir Oval, Apt. 3H, Bronx, N.Y. 10467
Filed Feb. 18, 1997, Ser. No. 66,522
Term of patent 14 years
LOC (6) Cl. 30 - *09*
U.S. ~~Cl. D30~~—153

388,559
ANIMAL TOY
William D. Mauldin, Jr., Sarasota, Fla., assignor to Planet Pet, Inc., Naples, Fla.
Filed Jan. 14, 1997, Ser. No. 64,899
Term of patent 14 years
LOC (6) Cl. 30 - *99*
U.S. Cl. D30—160

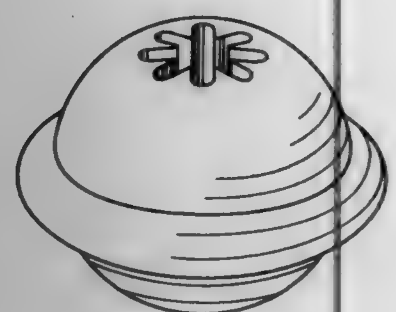

388,560
LITTER BOX
Alan Francis Savicki, South Windsor, Conn., assignor to First Brands Corporation, Danbury, Conn.
Filed Feb. 14, 1996, Ser. No. 5[illegible],307
Term of patent 14 years
LOC (6) Cl. 30 - *99*
U.S. Cl. D30—162

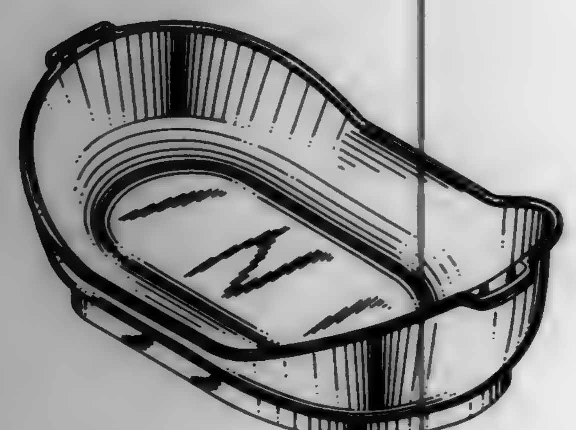

388,561
CORDLESS ELECTRIC BLOWER
Lloyd H. Tuggle, Shreveport, La.; Michael S. Houge, Franklin, and Ronald G. Brant, Smyrna, both of Tenn., assignors to WCI Outdoor Products, Inc., Cleveland, Ohio
Filed Oct. 8, 1996, Ser. No. 60,843
Term of patent 14 years
LOC (6) Cl. 15 - *05*
U.S. Cl. D32—15

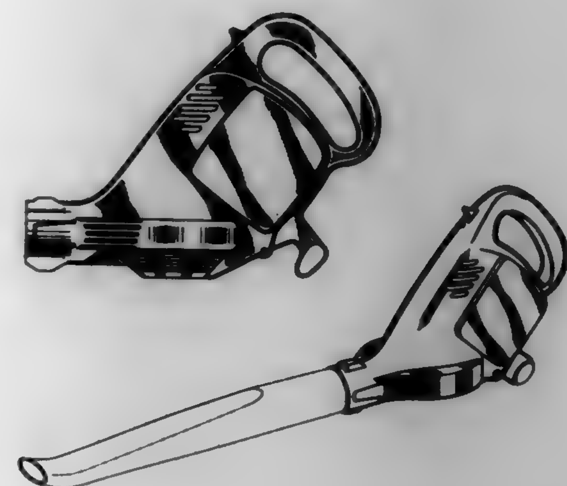

388,562
STEAM CLEANER
Alessandro Doria, Milan, Italy, assignor to Daniels, S.p.A., Milan, Italy
Filed Oct. 30, 1996, Ser. No. 61,753
Claims priority, application Hague Agreement, May 21, 1996, DMA003329
Term of patent 14 years
LOC (6) Cl. 15 - *05*
U.S. Cl. D32—17

388,563
VACUUM CLEANER
Tat Nin Lui, Chai Wan, Hong Kong, assignor to Choon Nang Electricl Appliance Mfty., Ltd., Aberdeen, Hong Kong
Filed Mar. 8, 1994, Ser. No. 19,673
Term of patent 14 years
LOC (6) Cl. 15 - *05*
U.S. Cl. D32—18

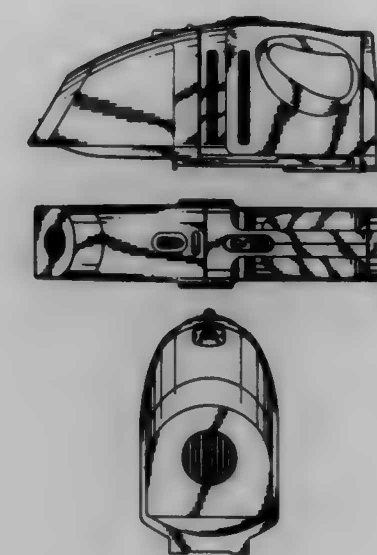

388,564
LIQUID REMOVAL APPARATUS
Craig Lussi, 8742 Preston Pl., Chevy Chase, Md. 20815
Filed Jul. 19, 1996, Ser. No. 57,208
Term of patent 14 years
LOC (6) Cl. 15 - *05*
U.S. Cl. D32—21

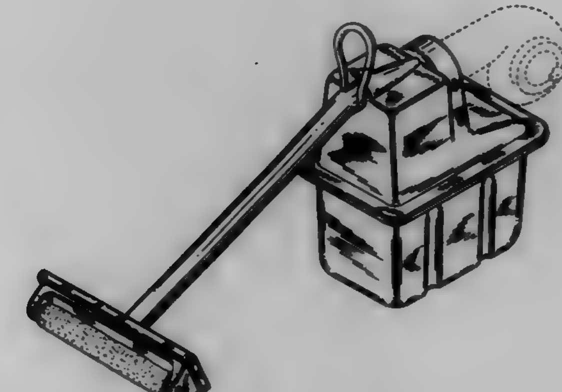

388,565
VACUUM CLEANER
Silvano Pietrobon, Crespano Del Grappa, Italy, assignor to W.S. S.p.A., Fonte, Italy
Filed Sep. 9, 1996, Ser. No. 59,338
Claims priority, application WIPO, Aug. 13, 1996, DM/037217
Term of patent 14 years
LOC (6) Cl. 15 - *05*
U.S. Cl. D32—23

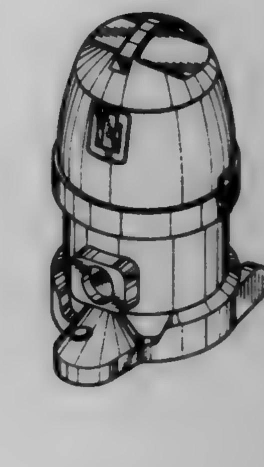

388,566
DRAIN TRAY FOR A HOUSEHOLD APPLIANCE
Ronald J. Reid, Box 2063, and Ron J. Spiteri, 1165 Shady Oaks, both of Napa, Calif. 94558
Filed May 16, 1996, Ser. No. 54,536
Term of patent 14 years
LOC (6) Cl. 15 - *05*
U.S. Cl. D32—25

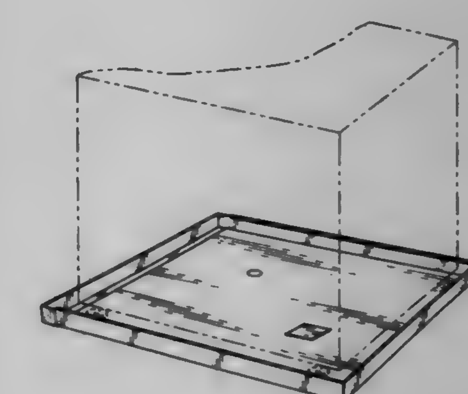

388,567
MOWER DECK WASHER
Lyle O. Facey, 5210 Amethyst Ave., Montague, Calif. 96064
Filed Jun. 27, 1996, Ser. No. 56,337
Term of patent 14 years
LOC (6) Cl. 15 - *05*
U.S. Cl. D32—25

388,568
SQUEEGEE
Brian Leonard, Durham, and Kathryn King McEntee, Washington, both of N.C., assignors to Rubbermaid Incorporated, Wooster, Ohio
Filed Aug. 8, 1996, Ser. No. 58,111
Term of patent 14 years
LOC (6) Cl. 08 - *05*
U.S. Cl. D32—41

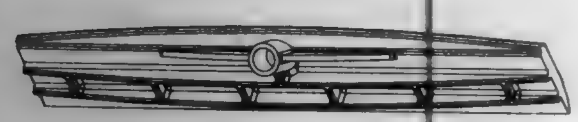

388,569
CLEANING TOOL
Gary P. Israel, Andover, Kans., assignor to Wescon Products Company, Wichita, Kans.
Filed Sep. 24, 1996, Ser. No. 60,180
Term of patent 14 years
LOC (6) Cl. 08 - *05*
U.S. Cl. D32—41

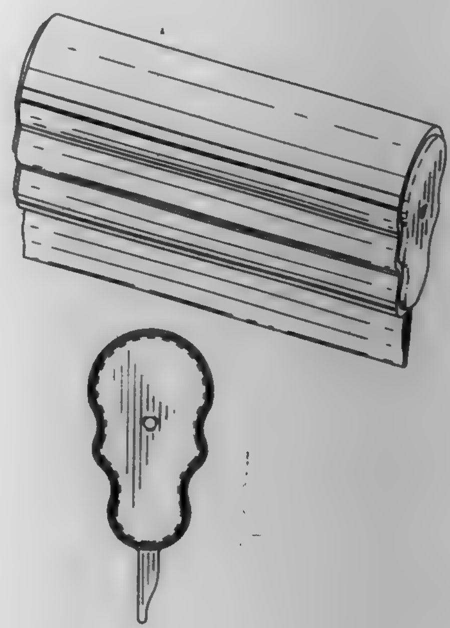

388,570
COMBINED FLUID CONTAINER AND ICE SCRAPER
Romilly Humphries, Prescott Rd., South Bristol, Me. 04568
Filed Apr. 25, 1996, Ser. No. 53,603
Term of patent 14 years
LOC (6) Cl. 08 - *05*
U.S. Cl. D32—42

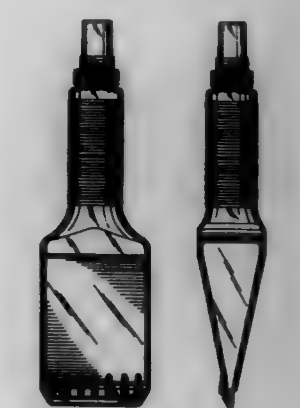

388,571
COMBINED FLOOR SCRAPER AND SCRUBBER
Richard W. Campbell, Halifax Mobile Home Estates, 6 Parkwood Dr., Halifax, Mass. 02338-1505
Filed Oct. 8, 1996, Ser. No. 60,841
Term of patent 14 years
LOC (6) Cl. 08 - *05*
U.S. Cl. D32—42

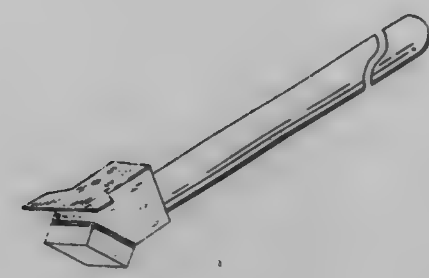

388,572
UTILITY KNIFE SCRAPING BLADE
Peter Gold, 465 N. Wood Rd., Rockville Centre, N.Y. 11570
Filed Nov. 1, 1996, Ser. No. 61,901
Term of patent 14 years
LOC (6) Cl. 08 - *05*
U.S. Cl. D32—46

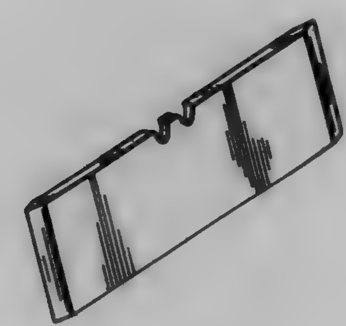

388,573
GRILL CLEANING TOOL
Dan Rostron, 2493 Victoria Park Cir., Riverton, Utah 84065
Filed May 9, 1996, Ser. No. 54,331
Term of patent 14 years
LOC (6) Cl. 08 - *05*
U.S. Cl. D32—49

388,574
ELECTRIC STEAM IRON
Jean-Marie Clouet, Ancinnes, France, assignor to Moulinex S.A., Paris, France
Filed May 3, 1996, Ser. No. 53,984
Claims priority, application France, Nov. 3, 1995, 95/6024
Term of patent 14 years
LOC (6) Cl. 07 - *05*
U.S. Cl. D32—70

388,575
SOLEPLATE FOR A STEAM IRON
Stuart Naft, Fairfield, Conn., assignor to Black & Decker Inc., Newark, Del.
Filed Jan. 9, 1997, Ser. No. 64,719
Term of patent 14 years
LOC (6) Cl. 07 - *05*
U.S. Cl. D32—71

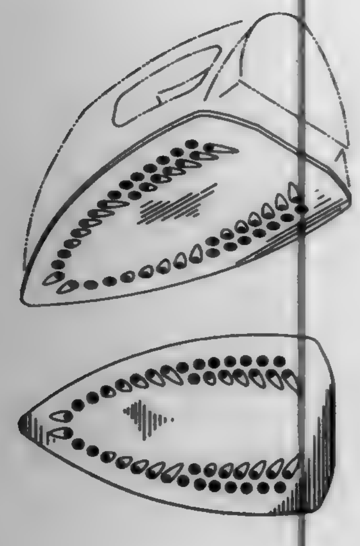

388,576
COMBINED IRON AND STEAM GENERATOR
Jacques Gudefin, Saint-Priest, and Serge Brun, Lyons, both of France, assignors to Calor S.A., Lyon Cedex, France
Filed Jan. 4, 1996, Ser. No. 48,595
Claims priority, application France, Aug. 4, 1995, 954391
Term of patent 14 years
LOC (6) Cl. 07 - *05*
U.S. Cl. D32—73

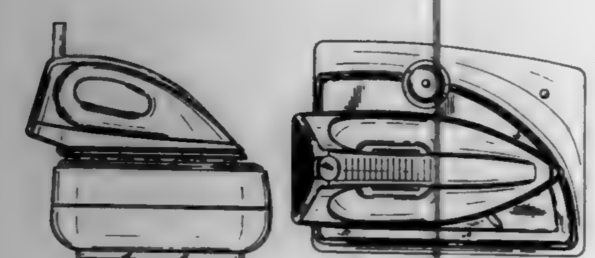

388,577
ROLL OUT TRASH CART
James B. Rehrig, Rancho Palos Verdes, Calif., and William Pat Apps, Alpharetta, Ga., assignors to Rehrig Pacific Company, Los Angeles, Calif., a part interest
Filed Jun. 20, 1996, Ser. No. 56,059
Term of patent 14 years
LOC (6) Cl. 09 - *09*
U.S. Cl. D34—5

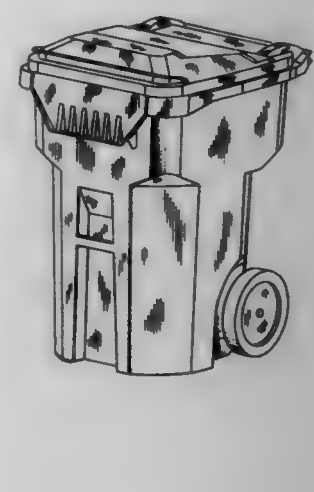

388,578
SANITARY NAPKIN DISPOSAL
John Richard Arbak, Santa Monica, and Allan Cameron, Ventura, both of Calif., assignors to Bobrick Washroom Equipment, Inc., North Hollywood, Calif.
Filed Jun. 13, 1996, Ser. No. 55,774
Term of patent 14 years
LOC (6) Cl. 09 - *09*
U.S. Cl. D34—6

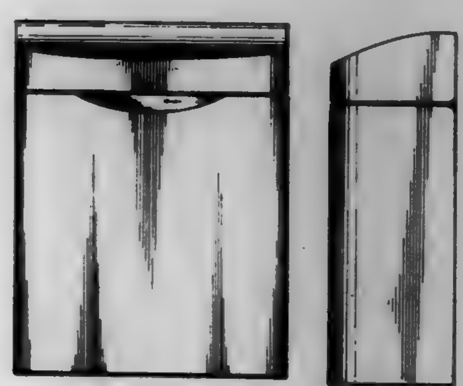

388,579
TOP AND SIDES OF A TRASH CONTAINER LID
Craig V. Taylor, Container Components, Inc., 8960 Lurline Ave., Chatsworth, Calif. 91311
Filed Jul. 8, 1996, Ser. No. 56,734
Term of patent 14 years
LOC (6) Cl. 09 - *09*
U.S. Cl. D34—11

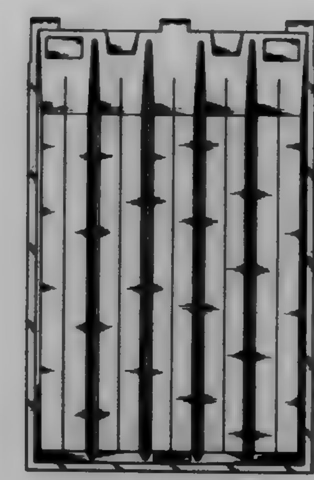

388,580
UTILITY CART
Paul M. Havlovitz, Escondido, Calif., assignor to Republic Tool & Mfg. Corp., Carlsbad, Calif.
Filed Jul. 8, 1996, Ser. No. 56,760
Term of patent 14 years
LOC (6) Cl. 12 - *02*
U.S. Cl. D34—19

388,581
GOLF CART HANDLEBAR WITH SCORE BOARD
Ching-Chang Wu, No. 35-1, Jih Hsin Street, Tu Cheng Hsiang, Taipei Hsien, Taiwan
Filed Oct. 28, 1996, Ser. No. 61,638
Term of patent 14 years
LOC (6) Cl. 12 - *02*
U.S. Cl. D34—27

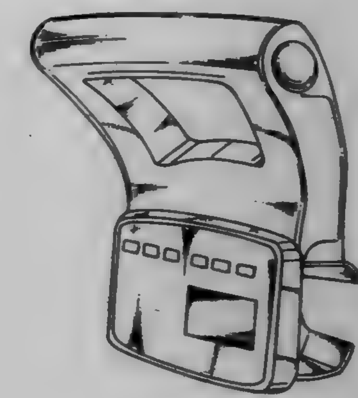

388,582
PALLET PULLER
William S. Irvin, Jr., 376 W. High Point La., Columbia, Mo. 65203
Filed Sep. 30, 1996, Ser. No. 60,499
Term of patent 14 years
LOC (6) Cl. 12 - *05*
U.S. Cl. D34—28

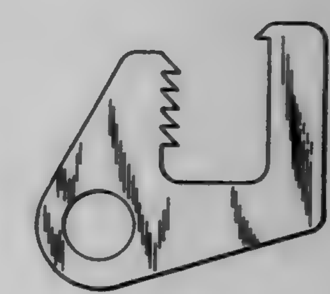

388,583
ACCELERATOR VANE FOR A CENTRIFUGE
J. Asher Glaun, Sharon, Mass., assignor to Baker Hughes Incorporated, Houston, Tex.
Filed Jun. 27, 1995, Ser. No. 40,793
Term of patent 14 years
LOC (6) Cl. 12 - *05*
U.S. Cl. D34—29

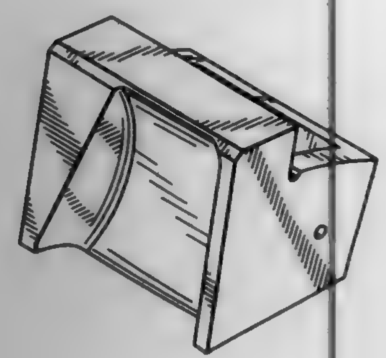

388,584
SAVINGS BOX WITH COIN SPINNER
Shigeru Sugawara, Tokyo, Japan, assignor to Tenyo Co., Tokyo, Japan
Filed Aug. 23, 1995, Ser. No. 43,041
Term of patent 14 years
LOC (6) Cl. 99 - *00*
U.S. Cl. D99—35

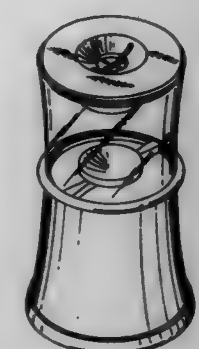

LIST OF PATENTEES

TO WHOM

PATENTS WERE ISSUED ON THE 30th DAY OF DECEMBER, 1997

NOTE— Arranged in accordance with the first significant character or word of the name (in accordance with city and telephone directory practice).

Aagaard, Randy G.: *See—*
Luedke, Thomas J.; Aagaard, Randy G.; Niemi, Carl A.; and Shea, Andrew J., 5,701,703, Cl. 52-36.500.
AB Rexroth Mecman: *See—*
Granberg, Rune, 5,701,799, Cl. 92-125.000.
ABB Lummus Global Inc.: *See—*
Tsang, Chih-Hao Mark; Petty, Randall Hughes; Clausen, Glenn Allen; and Schrader, Charles Henry, 5,702,589, Cl. 208-67.000.
ABB Management AG: *See—*
Brem, Ernst; Ulrich, Roland; and Stadelmann, Peter Werner, 5,701,731, Cl. 60-39.020.
Abbott Laboratories: *See—*
Johnson, Robert H., 5,702,374, Cl. 604-283.000.
Li, Qun; Wang, Wei-Bo; Chu, Daniel T.; and Hasvold, Lisa Anne, 5,703,244, Cl. 548-557.000.
Mazurek, Carol; Nelson, Charles L.; Hodges, Steven C.; and Scheffel, James W., 5,702,953, Cl. 436-69.000.
Abdel-Rahman, Hesham Nimer Hasan: *See—*
Aggarwal, Varinder Kumar; Abdel-Rahman, Hesham Nimer Hasan; and Lee, Hee Yoon, 5,703,246, Cl. 548-955.000.
Abe, Dennis F., Jr., to Eby, William T. Anti-hijack system. 5,703,563, Cl. 340-426.000.
Abe, Hiroshi: *See—*
Yoshida, Wataru; Fukushima, Tetsuaki; Taniguchi, Hideki; and Abe, Hiroshi, 5,703,264, Cl. 558-316.000.
Abe, Koichi; and Inui, Takashi, to Texas Instruments Incorporated. Address bit latching input circuit. 5,703,499, Cl. 326-62.000.
Abe, Mariko; Ebata, Shuji; Abe, Takafumi; and Higuchi, Hirofumi, to Mitsubishi Gas Chemical Company, Inc. Process for preparing a carboxylic acid ester. 5,703,272, Cl. 560-231.000.
Abe, Takafumi: *See—*
Abe, Mariko; Ebata, Shuji; Abe, Takafumi; and Higuchi, Hirofumi, 5,703,272, Cl. 560-231.000.
Abe, Tsutomu: *See—*
Higuma, Masahiko; Ikeda, Masami; Asai, Naohito; Abe, Tsutomu; Kashino, Toshio; Ohshima, Noriyoshi; Okazaki, Takeshi; Sugimoto, Hitoshi; and Tajima, Hiroki, 5,701,995, Cl. 206-205.000.
Abratech Corporation: *See—*
Amir, Avner; Fletcher, Daniel John; and Jewett, Don Lee, 5,701,909, Cl. 128-731.000.
ABT, Inc.: *See—*
Gunter, Charles E., 5,702,204, Cl. 405-119.000.
Abushanab, Elie; and Pragnacharyulu, Palle V. P., to Board of Governors for Higher Education, State of Rhode Island and Providence Plantations, The. Adenosine deaminase inhibitors. 5,703,084, Cl. 514-261.000.
ACC Microelectronics Corporation: *See—*
Chu, Edwin; and Lai, Hu-Kong, 5,703,402, Cl. 257-737.000.
Accatino, Luciano: *See—*
Bertin, Giorgio; and Accatino, Luciano, 5,703,547, Cl. 333-209.000.
Accutrol Company, Inc.: *See—*
Pinto, Ivan; Perez, Gerardo; and Bowersox, Clarence W., Jr., 5,703,301, Cl. 73-864.630.
Ace, Constance: *See—*
Bezwada, Rao S.; Arnold, Steven C.; and Ace, Constance, 5,703,200, Cl. 128-354.000.
Acer Peripherals, Inc.: *See—*
Tai, Wen-Chung, 5,703,607, Cl. 345-34.000.
Acket, Gerard A.: *See—*
Valster, Adriaan; De Poorter, Johannes A.; and Acket, Gerard A., 5,703,894, Cl. 372-46.000.
Acme Electric Corporation: *See—*
Wood, Daniel P., 5,703,558, Cl. 336-192.000.
Acorn Medical, Inc.: *See—*
Alferness, Clifton A., 5,702,343, Cl. 600-37.000.
Acres Gaming, Inc.: *See—*
Acres, John F.; Ginsburg, Alec; and Wiebenson, David, 5,702,304, Cl. 463-29.000.
Acres, John F.; Ginsburg, Alec; and Wiebenson, David, to Acres Gaming, Inc. Method and apparatus for operating networked gaming devices. 5,702,304, Cl. 463-29.000.
Actinic Systems, Inc.: *See—*
Caprari, Fausto, 5,703,374, Cl. 250-492.200.
Active Motion Systems, LLC: *See—*
DeSpain, Julianne M.; Oloff, Lawrence D.; and Rogers, Theodore W., 5,702,354, Cl. 601-27.000.
Acushnet Company: *See—*
Rajagopalan, Murali; and Harris, Kevin, 5,703,166, Cl. 525-196.000.
Adachi, Chihaya: *See—*
Nagai, Kazukiyo; Adachi, Chihaya; Tamoto, Nozomu; and Sakon, Yohta, 5,702,833, Cl. 428-690.000.
Adachi, Hiroyuki: *See—*
Watanabe, Hiroshi; Hirata, Toichi; Haga, Masakazu; Yamagata, Eiji; Fujishima, Kazuo; and Adachi, Hiroyuki, 5,701,691, Cl. 37-348.000.
Adachi, Jun: *See—*
Asai, Koichi; Isogai, Takeyoshi; Mizuno, Manabu; and Adachi, Jun, 5,701,821, Cl. 101-424.000.
Adachi, Mitsuru; Sasaki, Hiroto; and Sato, Satoru, to Ube Industries, Ltd. Semi-solid metal processing method and a process for casting alloy billets suitable for that processing method. 5,701,942, Cl. 164-71.100.
Adachi, Rensuke: *See—*
Sano, Hiroshi; and Adachi, Rensuke, 5,701,903, Cl. 128-665.000.
Adachi, Yukishige: *See—*
Komatsuki, Masato; Ishii, Makoto; Adachi, Yukishige; Makino, Keiichi; and Miyazaki, Shinichi, 5,702,549, Cl. 152-548.000.
Adam, Dan R.; Kempner, Kenneth M.; Vivino, Mark A.; Tucker, Eben E.; and Jones, Michael, to United States of America, Health and Human Services. Method and system for Doppler ultrasound measurement of blood flow. 5,701,898, Cl. 128-661.090.
Adamek, Wolfgang; Kretschmer, Horst; Estrup, Hubert Grosse; Nieuhaus, Clemens; Herchenbach, Paul; Sarfert, Andreas; Kämpf, Klaus; and Schott, Wilhelm, to GKN Walterscheid GmbH. Protective device for telescopic shafts. 5,702,306, Cl. 464-172.000.
Adamiak, Hubert: *See—*
Schubert, Peter; and Adamiak, Hubert, 5,702,622, Cl. 219-121.750.
Adams, Daniel O.: *See—*
Euteneuer, Charles L.; Mattison, Richard C.; Adams, Daniel O.; Hektner, Thomas R.; and Keith, Peter T., 5,702,364, Cl. 604-96.000.
Adams, Theodore C.: *See—*
Fisher, Steven C.; Adams, Theodore C.; Stangeland, Maynard L.; Riestdyk, Jacob; and Winans, Paul R., 5,701,670, Cl. 29-890.010.
Adamson, Robert D.: *See—*
Finney, Randal D.; and Adamson, Robert D., 5,702,161, Cl. 299-37.100.
Adaptec, Inc.: *See—*
Hill, John P., 5,703,584, Cl. 341-141.000.
Adda, Maurice: *See—*
Merle, Jean-Pierre; Lassalle, Martine; Bernoux, Franck; and Adda, Maurice, 5,703,643, Cl. 348-341.000.
Adhesives Research, Inc.: *See—*
Zajaczkowski, Michael J.; and Stutzman, Barbara A., 5,703,169, Cl. 525-309.000.
Zajaczkowski, Michael J.; and Stutzman, Barbara A., 5,703,170, Cl. 525-309.000.
Adir et Compagnie: *See—*
Durand, Ludovic; Babingui, Jean-Paul; Moulin, Claudie; Robert-Piessard, Sylvie; Le Baut, Guillaume; Scalbert, Elisabeth; Caignard, Daniel-Henri; and Renard, Pierre, 5,703,118, Cl. 514-456.000.
Lavielle, Gilbert; Muller, Olivier; Millan, Mark; and Audinot, Valérie, 5,703,070, Cl. 514-212.000.
Lesieur, Daniel; Fourmaintraux, Eric; Depreux, Patrick; Delagrange, Philippe; Renard, Pierre; and Guardiola-Lemaitre, Béatrice, 5,703,121, Cl. 514-469.000.
Wierzbicki, Michel; Sauveur, Frédéric; Boussard, Marie-Francoise; Bonnet, Jacqueline; and Sabatini, Massimo, 5,703,074, Cl. 514-231.500.
Adler, Klaus; Gubisch, Erwin; and Sommerauer, Alois, to Wacker-Chemie GmbH. Process for waterproofing gypsum materials. 5,702,828, Cl. 428-540.000.
Adolf Hottinger Maschinenbau GmbH: *See—*
Rommel, Reiner; and Stangler, Ulf, 5,701,946, Cl. 164-201.000.
Advanced Cytometric Inc.: *See—*
Powles, Trevor J.; and Imran, Mir A., 5,701,910, Cl. 128-764.000.
Advanced Interconnections Corporation: *See—*
Murphy, James V.; Murphy, Michael J.; Fisher, Burton; and Taylor, Robert, 5,702,255, Cl. 439-71.000.
Advanced Micro Devices, Inc.: *See—*
Bailey, Joseph A.; and Qureshi, Qadeer A., 5,703,919, Cl. 377-16.000.
Geisler, Joseph P., 5,703,501, Cl. 326-96.000.
Pakerisamy, Saragavani; and Tan, Wayne H., 5,702,005, Cl. 206-718.000.
Salugsugan, Isidore; and Schonauer, Diana M., 5,702,563, Cl. 156-636.100.
Shen, Lewis, 5,702,564, Cl. 156-643.100.
Spence, Christopher A., 5,702,848, Cl. 430-5.000.
Advanced Mobile Telecommunication Technology Inc.: *See—*

Hagiwara, Yarumasa; and Yatsuzuka, Shinichi, 5,701,743, Cl. 62-6.000.
Advanced Vision Technologies Inc.: See—
Potter, Michael D., 5,703,380, Cl. 257-10.000.
Advantest Corporation: See—
Kuroe, Shinichiro, 5,703,489, Cl. 324-601.000.
AE Goetze GmbH: See—
Junge, Klaus, 5,701,802, Cl. 92-190.000.
AEA Technology PLC: See—
Young, Robin Michael Kurt, 5,701,943, Cl. 164-97.000.
Aerojet-General Corporation: See—
Malik, Aslam A.; and Archibald, Thomas G., 5,703,194, Cl. 528-70.000.
Aerospatiale Societe Nationale Industrielle: See—
Geyer, Freddy; Vezain, Gérard; and Roux, Christian, 5,702,069, Cl. 244-161.000.
Merle, Jean-Pierre; Lassalle, Martine; Bernoux, Franck; and Adda, Maurice, 5,703,643, Cl. 348-341.000.
Aesculap AG: See—
Back, Lothar; Herrmann, Gebhard; Nesper, Markus; and Weisshaupt, Dieter, 5,702,411, Cl. 606-157.000.
Afonso, Adriano; Kelly, Joseph M.; and Wolin, Ronald L., to Schering Corporation. Tricyclic compounds useful for inhibition of G-protein function and for treatment of proliferative diseases. 5,703,090, Cl. 514-290.000.
Afriat, Isabelle; and Gagnebien, Didier, to L'Oreal. Stable composition containing a water-sensitive cosmetic and/or dermatological active agent. 5,703,041, Cl. 514-2.000.
Agatston, David: See—
Lucas, Gary L.; Keller, Kathleen E.; Agatston, David; and Caplan, Drew, 5,703,938, Cl. 375-112.000.
Agatsuma Co., Ltd.: See—
Todokoro, Masatoshi, 5,702,108, Cl. 273-447.000.
AGCO Corporation: See—
Wilson, Ronald E., 5,702,300, Cl. 460-106.000.
Agency of Industrial Science & Technology: See—
Fujishima, Shizu; and Yamano, Naoko, 5,702,939, Cl. 435-233.000.
Agency of Industrial Science & Technology, Ministry of International Trade & Industry: See—
Shigematsu, Yukifumi; and Matsumoto, Gen, 5,704,016, Cl. 395-27.000.
Towata, Atsuya; and Sando, Mutsuo, 5,703,002, Cl. 502-350.000.
Agfa-Gevaert AG: See—
Mueller, Markus, 5,703,676, Cl. 355-56.000.
Odenwälder, Heinrich; Langen, Hans; Dahlhaus, Uwe; and Schütz, Heinz-Dieter, 5,702,877, Cl. 430-551.000.
Agfa-Gevaert Aktiengesellschaft: See—
Birgmeir, Klaus; and Waibel, Hermann, 5,703,700, Cl. 358-487.000.
Aggarwal, Varinder Kumar; Abdel-Rahman, Hesham Aimer Hasan; and Lee, Hee Yoon, to Zeneca Limited. Process for the preparation of an oxirane, aziridine or cyclopropane. 5,703,246, Cl. 548-955.000.
Agharkar, Shreeram N.: See—
Gogate, Uday S.; Agharkar, Shreeram N.; and Phusanti, Lawan, 5,703,111, Cl. 514-410.000.
AGR International, Inc.: See—
Novak, John; and Stivison, Lloyd, 5,701,990, Cl. 198-604.000.
Agranc AG: See—
Ehret, Aloyse, 5,702,943, Cl. 435-253.600.
Agrawal, C. Mauli: See—
Scheneck, Robert C.; and Agrawal, C. Mauli, 5,702,446, Cl. 623-16.000.
Agrawal, Rakesh; Fidkowski, Zbigniew Tadeusz; and Herron, Donn Michael, to Air Products and Chemicals, Inc. Process to produce moderate purity oxygen using a double column plus an auxiliary low pressure column. 5,701,764, Cl. 62-646.000.
Ahlstrom Machinery Corporation: See—
Raak, Keijo, 5,701,829, Cl. 110-238.000.
Ahmad, Aftab: See—
Schuegraf, Klaus F.; and Ahmad, Aftab, 5,702,976, Cl. 437-67.000.
Ahne, Hellmut: See—
Sezi, Recai; Boradoerfer, Horst; Ahne, Hellmut; Birkle, Siegfried; Kuehn, Eberhard; Leuschner, Rainer; Rissel, Eva; and Sebald, Michael, 5,703,186, Cl. 526-272.000.
Aida Chemical Industries Co., Ltd.: See—
Ozawa, Yukio; Shimamoto, Katsuhiko; Ishigaki, Shinichi; Araki, Hitoshi; Nakata, Yukio; and Fujimaru, Atsushi, 5,702,501, Cl. 75-255.000.
Aida, Koji: See—
Mizutani, Minoru; Hayashi, Kuniharu; and Aida, Koji, 5,702,189, Cl. 400-328.000.
Aihara, Kintaro: See—
Sugita, Yukio; Aihara, Kintaro; Ishiyama, Sadayuki; and Yamada, Jun, 5,702,798, Cl. 428-131.000.
Aimoto, Hideo: See—
Satou, Masaharu; Kasahara, Tamiyoshi; Murakami, Takuya; Kawagoe, Kenji; Uno, Takaaki; Aimoto, Hideo; and Horiuchi, Tamaki, 5,702,122, Cl. 280-691.000.
Ainsworth, Adam Kenneth; Glenville, Reginald Paul; and McLean, Iain Alan, to British Nuclear Fuels plc. Apparatus for the inspection of cylindrical objects having a borescope device. 5,703,377, Cl. 250-559.450.
Air Liquide America Corporation: See—
Cieutat, Denis; and Schmidt, Emmanuel, 5,702,678, Cl. 423-567.100.
Air Products and Chemicals, Inc.: See—
Agrawal, Rakesh; Fidkowski, Zbigniew Tadeusz; and Herron, Donn Michael, 5,701,764, Cl. 62-646.000.
Air Tracks, Inc.: See—
Amico, Peter, 5,701,966, Cl. 180-7.200.
Airbag Systems Co., Ltd.: See—
Takemoto, Norikazu; Ishizuka, Hideki; Konta, Takeshi; and Takeuchi, Kunihiro, 5,703,412, Cl. 307-10.100.
Aisan Kogyo Kabushiki Kaisha: See—
Kikuta, Hikaru; and Suzuki, Toshiro, 5,703,556, Cl. 336-83.000.
Aisin Seiki Kabushiki Kaisha: See—
Ito, Sadao, 5,702,155, Cl. 297-362.110.
Aizawa, Makoto: See—
Umeda, Hironori; Mashimo, Tohru; Hironaka, Kazuo; Nakahama, Tadamitsu; Yamane, Takakazu; Aizawa, Makoto; and Taniguchi, Yukifumi, 5,702,578, Cl. 204-486.000.
Akamatsu, Mikio; Seki, Kenji; Yamashita, Katsuhiro; Kobayashi, Takeya; and Taniguchi, Takashi, to Nichias Corporation; and Toho Chemical Engineering and Construction Co., Ltd. Apparatus for recovering high-boiling point solvents. 5,701,762, Cl. 62-636.000.
Akasaka, Nobuhiro: See—
Oishi, Kazumasa; Akasaka, Nobuhiro; Kakuta, Tatsuya; and Matsuda, Yasuo, 5,703,988, Cl. 385-128.000.
Akashi, Mitsumasa: See—
Takano, Toshiro; and Akashi, Mitsumasa, 5,701,796, Cl. 91-512.000.
Akazaki, Shusuke: See—
Munakata, Hiroki; Nishimura, Yoichi; Kitagawa, Hiroshi; and Akazaki, Shusuke, 5,701,871, Cl. 123-491.000.
Akerberg, Denis W., to QO Chemicals, Inc. Solid furan binders for composite articles. 5,703,144, Cl. 523-144.000.
Akian, Z. Paul: See—
Suri, Kanwar; and Akian, Z. Paul, 5,702,592, Cl. 210-90.000.
Akiba, Takesada; and Kitsukawa, Goro, to Hitachi Ltd. Semiconductor integrated circuit device having a leakage current reduction means. 5,703,825, Cl. 365-229.000.
Akiyama, Moriyoshi: See—
Tsuru, Yasutaka; Okamura, Takumi; Kimura, Shoji; Yamamoto, Yuji; Murata, Toshinori; Katsumata, Kenji; Akiyama, Moriyoshi; and Eda, Takanori, 5,703,658, Cl. 348-554.000.
Akiyama, Toshiaki: See—
Nagai, Takashi; Honda, Nobuyasu; Iida, Tomohide; Akiyama, Toshiaki; Kuramashi, Koji; and Toda, Asao, 5,702,857, Cl. 430-101.000.
Akiyama, Yuji; Morimura, Kazuhiko; Matsumoto, Masashi; Sugawa, Sadayuki; Kamada, Masashi; and Ninomiya, Takayuki, to Canon Kabushiki Kaisha. Resolution conversion method and apparatus. 5,704,019, Cl. 395-101.000.
Akopian, Paul: See—
Witherspoon, Leland; Buckberg, Gerald D.; and Akopian, Paul, 5,702,358, Cl. 604-4.000.
AKSYS, Ltd.: See—
Peter, Frederick H., Jr.; Bell, Eric; and Feldsein, Thomas M., 5,702,606, Cl. 210-646.000.
Aktiebolaget Electrolux: See—
Edlund, Dag, 5,701,859, Cl. 123-182.100.
Lindquist, Tommy, 5,701,631, Cl. 15-327.100.
Aktiengesellschaft, Siemens: See—
Heiss, Reinhold, 5,703,761, Cl. 361-800.000.
Akzo Nobel nv: See—
Hanna, Paul K., 5,703,201, Cl. 528-392.000.
Albemarle Corporation: See—
Magin, Ralph W.; and Sauer, Joe D., 5,703,016, Cl. 504-206.000.
Albert Einstein College of Medicine of Yeshiva University, a Division of Yeshiva University: See—
Sacchettini, James; Blanchard, John; and Jacobs, William R., Jr., 5,702,935, Cl. 435-193.000.
Albert, Patrick: See—
Vergnes, Alain; and Albert, Patrick, 5,703,915, Cl. 375-371.000.
Albrektsson, Björn; Carlsson, Lars; Jacobsson, Magnus; Rösthund, Tord; and Wennberg, Stig, to Astra Aktiebolag. Cup. 5,702,473, Cl. 623-22.000.
Alcan International Limited: See—
Sivilotti, Olivo Giuseppe; Leone, Gino Luigi; Sutherland, James Gordon; Thorburn, Herbert James; and Crosato, Bruno, 5,701,775, Cl. 72-201.000.
Alcatel Cable: See—
Carratt, Michel; and de Vecchis, Michel, 5,703,984, Cl. 385-106.000.
Alcatel Cit: See—
Dieudonne, Marc; and Perrier, Philippe, 5,703,707, Cl. 359-128.000.
Alcatel N.V.: See—
Brehm, Claude; Boniort, Jean-Yves; Nouchi, Pascale; and Auge, Jacques, 5,703,986, Cl. 385-123.000.
Durvaux, Marc Marie Ghislain; and Cassiers, Raphael Paul Claude, 5,703,910, Cl. 375-322.000.
Alcidi, Paolo; and Grassi, Gino, to Alcidi, Paolo; and Grassi, Gino. Method and apparatus for acquiring and processing electrocardiographic signals. 5,701,906, Cl. 128-696.000.
Alcoa Fujikura Limited: See—
Hayes, Earl J.; Hutchinson, Timothy A.; Hein, David A.; Shen, Alexander; and Pike-Biegunski, Michael J., 5,703,757, Cl. 361-752.000.
Alcon Laboratories, Inc.: See—
Brown, Kyle; Van Noy, Stephen J.; Woo, Yi-Ren; and Jensen, Lars D., 5,702,400, Cl. 606-107.000.
Casica, Peter D.; and Chon, James Y., 5,702,270, Cl. 439-528.000.
Aldridge, Donald, to Lion Apparel, Inc. Firefighter garment with closed-cell foam liner. 5,701,606, Cl. 2-81.000.
Alexander, Delbert S., Jr. Miniature bowling alley game. 5,702,308, Cl. 473-70.000.

Alexandrov, Yurii Victorovich: See—
Levankovskii, Igor Anatolyevich; Grinevitskii, Yurii Alexandrovich; Shults, Victor Danilovich; and Alexandrov, Yurii Victorovich, 5,702,160, Cl. 299-111.000.
Alexandrovich, Peter S.: See—
Wilson, John C.; and Alexandrovich, Peter S., 5,703,265, Cl. 558-390.000.
Alexiou, Michael: See—
Causton, Brian Edward; and Alexiou, Michael, 5,702,513, Cl. 106-31.930.
Alferness, Clifton A., to Acorn Medical, Inc. Cardiac reinforcement device. 5,702,343, Cl. 600-37.000.
Ali, Shaukat: See—
Mayhew, Eric; Ali, Shaukat; and Janoff, Andrew S., 5,703,117, Cl. 514-449.000.
Alkaloida Vegyeszeti Gyar: See—
Eszenyi, Tibor; Sebők, Péter; Frank, László; Papp, Gyula; Timár, Tibor; and Bartik, Tamás, 5,703,113, Cl. 514-422.000.
Allanson, Nigel Mark; and Davidson, Alan Hornsby, to British Biotech Pharmaceuticals Ltd. Disaccharide ligands for selectins. 5,703,059, Cl. 514-53.000.
Allelix Biopharmaceuticals: See—
Power, Patricia L.; and Rakhit, Sumanas, 5,703,072, Cl. 514-211.000.
Allen, Donald Eugene; Stringer, Steven Ray; Coyne, Richard Dale, deceased (by Jeannette Coyne, executrix), to Motorola, Inc. Acoustic wave device manufacturing method. 5,701,645, Cl. 29-25.350.
Allen, Kenneth Paul, to Mobil Oil Corporation. One step inversion/separation scheme using a plurality of vibrator sources. 5,703,833, Cl. 367-46.000.
Allen, Ronald L.; Bishop-Jones, Brenda J.; Cykana, Michael J.; Lai, Eddie K.; and Sipe, Stanley Wayne, to ElectroCom Automation, L.P. Apparatus for intercepting and forwarding incorrectly addressed postal mail. 5,703,783, Cl. 364-478.010.
Allen, Wade C.; Goodwin, Jeremy Philip; Nielsen, Robert Louis; Reder, Paul Joseph; and Toltzman, Douglas, to International Business Machines Corporation. Object independent scoping in an open system interconnection system. 5,704,041, Cl. 395-200.150.
Allen, William E.: See—
Gardner, Cynthia M.; Stone, Robert E.; Duffy, John D.; Allen, William E.; and Schimpf, James E., 5,701,793, Cl. 91-361.000.
Allergal: See—
Brady, Daniel G., 5,702,402, Cl. 606-107.000.
Allergan: See—
Burke, James A.; Garst, Michael E.; and Wheeler, Larry A., 5,703,077, Cl. 514-249.000.
Park, John Y.; Peng, Liu; and Dziabo, Anthony J., 5,703,024, Cl. 510-100.000.
Portney, Valdemar, 5,702,440, Cl. 623-5.000.
Alliance Pharmaceutical Corp.: See—
Brasile, Lauren; and Clarke, Jolene, 5,702,881, Cl. 435-1.200.
Pavia, Andre A.; Pucci, Bernard; Riess, Jean G.; and Zarif, Leila, 5,703,126, Cl. 514-562.000.
Alliant Techsystems Inc.: See—
Sharkey, J. Brian; Doblar, Randy A.; Bothwell, Frank E.; Belt, Ronald A.; and Page, Edward A., 5,703,835, Cl. 367-124.000.
Allied Colloids Limited: See—
Frampton, Harry, 5,701,955, Cl. 166-295.000.
AlliedSignal Inc.: See—
Cui, Changxing; Baughman, Ray H.; Iqbal, Zafar; Kazmar, Theodore R.; and Dahlstrom, David K., 5,702,629, Cl. 252-62.90R.
Halsall, Philip S., 5,701,741, Cl. 60-602.000.
Xue, Liang An, 5,702,837, Cl. 429-40.000.
Yu, Jimmy; and Lewellen, Guy, 5,703,597, Cl. 342-357.000.
Allison, Jeffery Daniel, to International Business Machines Corporation. Folding keyboard. 5,703,578, Cl. 341-22.000.
Allo Pro AG: See—
Limacher, Urs; and Lamprecht, Stefan, 5,702,476, Cl. 623-22.000.
Allonen, Harri, to Valmet Corporation. Method and device for transferring a measurement signal from a revolving roll used in a paper making machine. 5,703,574, Cl. 340-870.070.
Allott, Mark T.; Billimack, James J.; and Moritz, Timothy C., to Caterpillar Inc. Process for in situ molding of a bearing material in a ball and socket joint assembly. 5,702,660, Cl. 264-242.000.
Almasy, Lawrence: See—
Mulligan, Shaun T.; Vandepas, Robert J.; Shuler, James F.; and Almasy, Lawrence, 5,701,925, Cl. 137-119.050.
Almon, Jean-Jacques: See—
Meraldi, Jean-Paul; Ribiere, Joel; and Almon, Jean-Jacques, 5,702,547, Cl. 152-451.000.
Alpha Corporation: See—
Tsukada, Kazuo, 5,701,988, Cl. 194-241.000.
Alpha Thames Engineering Limited: See—
Appleford, David E.; Lane, Brian W.; and Webb, Alan D., 5,701,614, Cl. 4-555.000.
Alpine Engineered Products, Inc.: See—
Rupe, Danny L., 5,701,653, Cl. 29-432.000.
Alps Electric Co., Ltd.: See—
Kato, Hironori; Nakao, Masanori; and Ida, Yuichi, 5,702,260, Cl. 439-164.000.
Kazama, Tohio, 5,703,840, Cl. 369-13.000.
Alvarado, Ulises R., to Instrumentation Technology Associates, Inc. Apparatus for mixing selected volumes of liquids. 5,702,182, Cl. 366-130.000.
Alvarez, Manuel M., Jr. Method of playing a casino type card game. 5,702,106, Cl. 273-292.000.
Alza Corporation: See—
Amkraut, Alfred A.; and Yang, Heechung, 5,702,727, Cl. 424-491.000.
Merrill, Sonya; Ayer, Atul Devdatt; Chadha, Navjot; and Kaczynski, Anthony L., 5,702,725, Cl. 424-472.000.
Amada Metrecs Company, Limited: See—
Saito, Hiroshi, 5,701,790, Cl. 83-140.000.
Amano, Masahiko; Watanabe, Masahiro; Konishi, Hiroo; Tanifuji, Shinya; and Nakamura, Tomoharu, to Hitachi, Ltd. Electric power system stabilization control apparatus and method thereof. 5,703,791, Cl. 364-492.000.
Amano, Toshio, to Rohm Co., Ltd. Method of making a thin film thermal printhead. 5,701,659, Cl. 29-671.000.
Ambrogi, Robert R.: See—
Kamen, Dean L.; Ambrogi, Robert R.; Duggan, Robert J.; Heinzmann, Richard Kurt; Key, Brian R.; Skoskiewicz, Andrzej; and Kristal, Phyllis K., 5,701,965, Cl. 180-7.100.
American Cyanamid Company: See—
Doscher, Mary Ehlers, 5,702,681, Cl. 424-9.200.
Vitek, Michael Peter; and Jacobsen, Jack Steven, 5,703,209, Cl. 530-350.000.
Amerigon, Inc.: See—
Karunasiri, Tissa R.; Bell, David A.; and Ryan, Bruce M., 5,703,464, Cl. 320-19.000.
Ameron International Corporation: See—
Gasmena, Roland L., 5,703,178, Cl. 525-476.000.
Amersham International PLC: See—
Smith, Clifford; and Fuller, Carl, 5,702,925, Cl. 435-91.100.
Amico, Peter, to Air Tracks, Inc. Omnidirectional self-propelled vehicle for ground handling of equipment. 5,701,966, Cl. 180-7.200.
Amir, Avner; Fletcher, Daniel John; and Jewett, Don Lee, to Abratech Corporation. Machine and method for the determination of nervous-system-generator parameters using lead fields. 5,701,909, Cl. 128-731.000.
Amkraut, Alfred A.; and Yang, Heechung, to Alza Corporation. Compositions and methods for the oral delivery of active agents. 5,702,727, Cl. 424-491.000.
Ammons, William Steve; and Little, Roger G., to XOMA Corporation. Therapeutic uses of bactericidal-permeability-increasing protein dimer products. 5,703,038, Cl. 514-2.000.
Amoco Corporation: See—
Collins, Mark L.; Blomquist, Cecile; Lombardo, Massimo; and Eldredge, John, 5,702,896, Cl. 435-6.000.
Amrep, Inc.: See—
Ghibaudo, Jose A., 5,702,225, Cl. 414-408.000.
Amtran Technology Co., Ltd.: See—
Wu, Trans, 5,703,661, Cl. 348-673.000.
Amur Research Corp.: See—
Chasalow, Fred L., 5,703,063, Cl. 514-78.000.
An, Jong Tae, to Samsung Electronics Co., Ltd. Horizontal state correction circuit of a disk transferring device and method therefor. 5,703,453, Cl. 318-625.000.
An, Kwang-jin: See—
Choi, Sung-lim; and An, Kwang-jin, 5,702,871, Cl. 430-314.000.
Analog Devices, Inc.: See—
Crook, David T.; and Stroud, Ernest T., 5,703,519, Cl. 327-387.000.
Tucholski, Hans Juergen, 5,703,586, Cl. 341-144.000.
Anapliotis, Emmanuel: See—
Goymann, Volkmar; Anapliotis, Emmanuel; and Darga, Juergen, 5,702,484, Cl. 623-23.000.
Andersen, Alfred Frederick. Double-top garment. 5,701,712, Cl. 2-69.000.
Andersen, Kim: See—
Perregaard, Jens Kristian; Moltzen, Ejner Knud; Andersen, Kim; Pedersen, Henrik; Bøgesø, Klaus Peter; Pernet, Andre; Bopp, Barbara; Mulford, Darcy; and Sakamoto, Kiyoshi, 5,703,087, Cl. 514-278.000.
Andersen, Per Just; and Hodson, Simon K., to E. Khashoggi Industries. Molded articles having an inorganically filled oragnic polymer matrix. 5,702,787, Cl. 428-36.400.
Andersen, Terrell N.: See—
Sheargold, Stephen W.; and Andersen, Terrell N., 5,702,679, Cl. 423-599.000.
Anderson, Byron E.: See—
Makhlouf, Samer; Pankow, Mark L.; Anderson, Byron E.; and Bean, Pamela, 5,702,904, Cl. 435-7.100.
Anderson, Carolyn M., to H. B. Fuller Licensing & Financing, Inc. Branched copolymer pressure sensitive hot melt adhesive. 5,703,162, Cl. 525-89.000.
Anderson, James G.: See—
Murphy, Robert J., Jr.; and Anderson, James G., 5,703,278, Cl. 73-30.010.
Anderson, John Neil; and Stoney, Arthur, to Titon Hardware Limited. Slot ventilator. 5,702,297, Cl. 454-213.000.
Anderson, Kenneth D., to United States of America, Navy. Method for remotely detecting tides and the height of other surfaces. 5,703,594, Cl. 342-123.000.
Anderson, Michael John; Johnson, Gary Carl; Popovich, Mark Phillip; and Christensen, Jeffrey Eames, to Motorola, Inc. Microelectronic device package and method. 5,702,775, Cl. 428-1.000.
Anderson, Victor G., to Pinnacle Brands, Inc. Method and apparatus for creating cylindrical three dimensional picture. 5,704,061, Cl. 396-330.000.
Andersson, Poul Kirketerp: See—
Molin, Søren; Andersson, Poul Kirketerp; Gerdes, Kenn Axo; and Klemm, Per, 5,702,916, Cl. 435-69.100.

Ando, Ryo, to Sony Corporation. Clock reproducing device utilizing a frequency of wobble groove information. 5,703,851, Cl. 369-47.000.
Ando, Ryo: *See—*
Kuroda, Hirokazu; and Ando, Ryo, 5,703,854, Cl. 369-50.000.
Ando, Yoichi, to Mitsubishi Pencil Kabushiki Kaisha. Production method of ink-oozing plate for stamp. 5,702,863, Cl. 430-200.000.
Ando, Yushi: *See—*
Takahashi, Shin; Ohashi, Yoshiharu; Ando, Yushi; and Okuyama, Toshio, 5,703,267, Cl. 558-451.000.
Andonian, Thomas Gary. Gift-package ornament. 5,702,778, Cl. 428-5.000.
Andrews, William H.; Morser, Michael J.; and Vilander, Laura R., to Berlex Laboratories, Inc. Mutagenesis methods and compositions. 5,702,931, Cl. 435-172.300.
Anesaki, Tomoaki: *See—*
Tajima, Ikuo; Kojima, Terutada; Anesaki, Tomoaki; and Fukuoka, Minao, 5,701,832, Cl. 112-155.000.
Angelillo, Stephen P.; and Sweeting, Richard E., to Angelillo, Stephen P. Absorbent pad and thermal pack. 5,702,375, Cl. 604-358.000.
ANR Pipeline Company: *See—*
Buchhop, Thomas Robert; D'Alleva, Randall; Darnell, Ronald Keith; Little, Jack Ryan; and Pedersen, Curtis Thomas, 5,703,777, Cl. 364-431.062.
Ansari, Adil; and Zhang, Zhaohong, to Delco Electronics Corporation. Method and apparatus for sampling quadrature signals. 5,703,583, Cl. 341-122.000.
Anthony R. Sterling and Tri-tech, Inc.: *See—*
Sterling, Anthony P.; and Palmero, Albert, 5,702,420, Cl. 606-205.000.
Aoki, Keiichiro, to Toyota Jidosha Kabushiki Kaisha. Heater controller for an air-fuel ratio sensor. 5,701,877, Cl. 123-697.000.
Aoki, Masayuki, to Nikon Corporation. Compact high-performance zoom lens. 5,703,725, Cl. 359-683.000.
Aoki, Norihiko, to Olympus Optical Co., Ltd. Optical system comprising graded refractive index lens element. 5,703,723, Cl. 359-654.000.
Aoki, Takeshi, to Honda Giken Kogyo Kabushiki Kaisha. Leak compressed fuel gas discharging device. 5,701,928, Cl. 137-312.000.
Aoshima, Shinichiro: *See—*
Nakamura, Takuya; Hirano, Isuke; Aoshima, Shinichiro; Takahashi, Hironori; and Urakami, Tsuneyuki, 5,703,491, Cl. 324-750.000.
Aoyama, Kunitoshi: *See—*
Kozakai, Motokazu; Aoyama, Kunitoshi; and Sahasi, Masahiko, 5,702,053, Cl. 229-87.020.
Aoyama, Tooru; Tanaka, Shigeru; and Tanaka, Kouzi, to Nippondenso Co., Ltd. Voltage regulator of vehicle alternator. 5,703,472, Cl. 322-28.000.
Apple Computer, Inc.: *See—*
Cecys, Mark L., 5,704,007, Cl. 395-2.690.
Young, James A., 5,703,627, Cl. 345-199.000.
Appleford, David E.; Lane, Brian W.; and Webb, Alan D., to Alpha Thames Engineering Limited. Invalid bath. 5,701,614, Cl. 4-555.000.
Applewhite, John: *See—*
Johnson, Lonnie G.; and Applewhite, John, 5,701,879, Cl. 124-69.000.
Applied Digital Access: *See—*
Pope, Kevin; and Hartmann, Paul R., 5,703,871, Cl. 370-248.000.
Applied Materials, Inc.: *See—*
Shan, Hongching; Herchen, Harald; and Welch, Michael, 5,702,530, Cl. 118-723.0MP.
Aptek Industries, Inc.: *See—*
Flesher, H. Kelly; and Youmans, Albert P., 5,703,755, Cl. 361-737.000.
APV Pasilac A/S: *See—*
Busk, Per, 5,701,809, Cl. 99-459.000.
Aquino, Melissa Dee: *See—*
Offshack, Edward Robert; Painter, Jeffrey Donald; and Aquino, Melissa Dee, 5,703,034, Cl. 510-376.000.
Arai, Shinji: *See—*
Nishimura, Masayuki; Sogabe, Kiyoshi; Tanaka, Hiroyuki; and Arai, Shinji, 5,702,784, Cl. 428-34.900.
Arai, Youichi; O'Toole, Brendan; Saigo, Tsutomu; Shimoyama, Kenichi; Kumagai, Ryo; and Takada, Yoshihide, to Yazaki Corporation. Battery remaining capacity measuring device. 5,703,486, Cl. 324-427.000.
Arakawa, Naoto: *See—*
Sakai, Masanori; Kadowaki, Toshihiro; Arakawa, Naoto; and Ohnishi, Tetsuya, 5,703,696, Cl. 358-404.000.
Arakawa, Shingo: *See—*
Ishida, Naruo; Saijyo, Yoshio; Arakawa, Shingo; Watanabe, Kimiaki; and Inaba, Hidehiro, 5,703,295, Cl. 73-593.000.
Araki, Hitoshi: *See—*
Osawa, Yukio; Shimamoto, Katsuhiko; Ishigaki, Shinichi; Araki, Hitoshi; Nakata, Yukio; and Fujimaru, Atsushi, 5,702,501, Cl. 75-255.000.
Arashima, Teruo; Kimura, Makiko; Kashino, Toshio; Sugitani, Hiroshi; Hattori, Yoshifumi; Ikeda, Masami; Saito, Asao; Masuda, Kazuaki; Saito, Akio; and Orikasa, Tsuyoshi, to Canon Kabushiki Kaisha. Ink jet head orifice plate mounting arrangement. 5,703,632, Cl. 347-47.000.
Arbjerg, Niels, to Danfoss A/S. Device for controlling the pressure to be supplied to a hydrostatic steering unit. 5,701,970, Cl. 180-417.000.
Archer Daniels Midland Company: *See—*
Gugger, Eric T.; and Dueppen, Daniel G., 5,702,752, Cl. 426-634.000.
Archibald, Thomas G.: *See—*
Malik, Aslam A.; and Archibald, Thomas G., 5,701,194, Cl. 528-70.000.
Archimica SpA: *See—*
Bellani, Pietro, 5,703,233, Cl. 544-32.000.
Arco Chemical Technology, L.P.: *See—*
Gaffney, Anne M.; Kahn, Andrew P.; and Pitchai, Rangasamy, 5,703,254, Cl. 549-536.000.
Ardecky, Robert John: *See—*
Semple, Joseph Edward; Ardecky, Robert John; Nutt, Ruth Foelsche; Ripka, William Charles; Rowley, David C.; Lim-Wilby, Marguerita S. L.; and Brunck, Terence Kevin, 5,703,208, Cl. 530-331.000.
Arduini, Arturo: *See—*
Ohnishi, Yoshitake; Fujita, Jun-Ichi; Arduini, Arturo; Casnati, Alessandro; Pochini, Andrea; and Ungaro, Rocco, 5,702,620, Cl. 216-49.000.
Arfaei, Ahmad; and Lambert, James F., to W. R. Grace & Co.-Conn. Air controlling superplasticizers. 5,703,174, Cl. 525-329.900.
Argenson, Claude; de Peretti, Ferdinand; and Hovorka, Istvan, to Sofamor S.N.C. Spinal osteosynthesis device with median hook and vertebral anchoring support. 5,702,452, Cl. 623-17.000.
Arima, Satoshi, to Mitsubishi Denki Kabushiki Kaisha. Semiconductor device having element isolating insulating film in contact hole. 5,703,391, Cl. 257-382.000.
Arimoto, Kazutami; and Tsukude, Masaki, to Mitsubishi Denki Kabushiki Kaisha. Switched substrate bias for MOS-DRAM circuits. 5,703,522, Cl. 327-534.000.
Ark Foundation, LLC: *See—*
Nissim, Ofer; and Goldblatt, Marc, 5,702,085, Cl. 248-475.100.
Armbruster, Veit: *See—*
Düllberg, Gerald; Peusens, Herbert; and Armbruster, Veit, 5,703,545, Cl. 333-202.000.
Armco Inc.: *See—*
Kundrat, David M.; Smillie, Allan M.; and Sussman, Richard C., 5,702,502, Cl. 75-501.000.
Rodabaugh, Ronald D.; and Leeker, Jerald W., 5,702,534, Cl. 134-7.000.
Schoen, Jerry W.; Dahlstrom, Norris A.; and Klapheke, Christopher G., 5,702,539, Cl. 148-111.000.
Armentrout, Richard W.: *See—*
Murofushi, Kanji; Homma, Taira; Nagura, Shigehiro; and Armentrout, Richard W., 5,702,927, Cl. 435-104.000.
Armour, Duncan Robert; Evans, Brian; Middlemiss, David; Naylor, Alan; Pegg, Neil Anthony; Vinader, Maria Victoria; Giblin, Gerard Martin Paul; Hubbard, Tania; Hann, Michael Menteith; Lewell, Xiao-Qing; and Watson, Stephen Paul, to Glaxo Group Limited. Piperidine derivatives. 5,703,240, Cl. 546-210.000.
Army, The United States of America as reapresented by the Secretary of the: *See—*
Bean, Dennis L.; Malone, Philip G.; Sykes, Melvin C.; Tom, Judy C.; and Walley, Donald M., 5,702,651, Cl. 264-34.000.
Arnaud, Jean-Claude; and Costa Pereira, Pedro, to Sedepro. Tire having circumferential cables for anchoring the carcass. 5,702,548, Cl. 152-547.000.
Arndt, Kenneth A.: *See—*
Sharpe, Richard J.; Arndt, Kenneth A.; Galli, Stephen J.; Meltzer, Peter C.; Razdan, Raj K.; and Sard, Howard P., 5,703,088, Cl. 514-278.000.
Arnold, Michael J. Method for the preparation of pure carboxyethyl germanium sesquioxide. 5,703,259, Cl. 556-89.000.
Arnold, Steven C.: *See—*
Bezwada, Rao S.; Arnold, Steven C.; and Ace, Constance, 5,703,200, Cl. 528-354.000.
Arreguit, Javier: *See—*
Bidiville, Marc; Raeber, Eric; Arreguit, Javier; Buczek, Harthmuth; Van Shaik, Floris A.; Bauduin, François; and O'Keeffe, Denis, 5,703,356, Cl. 250-221.000.
Arris Pharmaceutical Corporation: *See—*
Chapman, David, 5,703,792, Cl. 364-496.000.
Arrow International Investment Corp.: *See—*
Taylor, Kevin; Latzgo, Philip F.; and Lenihan, Timothy J., 5,702,433, Cl. 607-101.000.
Arts, Gene H.; Carr, Jan E.; Kuk-Nagle, Karen T.; Lontine, Michael D.; and Millberg, Brian A., to Valleylab Inc. Coated electrosurgical electrode. 5,702,387, Cl. 606-45.000.
Asada, Hidehisa: *See—*
Numata, Yoshito; Asada, Hidehisa; Dohi, Keiji; Fukunaga, Takahiro; and Taniguchi, Yasushi, 5,702,910, Cl. 435-7.940.
Asahi Kasei Kogyo Kabushiki Kaisha: *See—*
Funakoshi, Shinji; and Kawai, Kenzou, 5,703,196, Cl. 528-196.000.
Asahi Kogaku Kogyo Kabushiki Kaisha: *See—*
Sano, Hiroshi; and Adachi, Rensuke, 5,701,903, Cl. 128-665.000.
Asai, Hironori: *See—*
Endo, Mitsuyoshi; Asai, Hironori; Yano, Keiichi; and Sato, Yoshitoshi, 5,703,397, Cl. 257-701.000.
Asai, Koichi; Isogai, Takeyoshi; Mizuno, Manabu; and Adachi, Jun, to Fuji Machine Mfg. Co., Ltd. Screen cleaning apparatus and screen cleaning method. 5,701,821, Cl. 101-424.000.
Asai, Naohito: *See—*
Higuma, Masahiko; Ikeda, Masami; Asai, Naohito; Abe, Tsutomu; Kashino, Toshio; Ohshima, Noriyoshi; Okazaki, Takeshi; Sugimoto, Hitoshi; and Tajima, Hiroki, 5,701,995, Cl. 206-205.000.
Asakura, Ryosuke; Nagaiwa, Hirohito; and Murakami, Masashige, to Toray Industries, Inc. Method for producing polyesters. 5,703,179, Cl. 526-59.000.
Asakura, Suguru: *See—*
Mutoh, Eiji; Asakura, Suguru; and Nagai, Akira, 5,703,414, Cl. 307-10.500.
Asami, Goro, to Nifco, Inc. Fastener assembly for securing a windshield on a vehicle body. 5,702,146, Cl. 296-96.210.

Asano, Kaoru; and Kubo, Kimiyo, to Toa Medical Electronics Co., Ltd. Method and device for analyzing particles. 5,703,959, Cl. 382-133.000.
Asano, Michihiro, to Nakamichi Corporation. Device for playing back disks. 5,703,844, Cl. 369-36.000.
Ashland Inc.: *See—*
Conville, John J.; Chwalik, Robert; Desai, Shrikant V.; Turcotte, David E.; and Lyon, James T., 5,702,631, Cl. 252-76.000.
Hlivka, Linda M.; and Wai, George K., 5,702,644, Cl. 252-356.000.
ASI Applied Systems, L.L.C.: *See—*
Sting, Donald W.; and Milosevic, Milan, 5,703,366, Cl. 250-341.200.
Asimopoulos, Nikos; Barry, Alexander Michael; and Nadler, Morton. Process and device for analyzing and restoring image data in a digital signal from a scanned document. 5,703,971, Cl. 382-282.000.
Asrar, Jawed; and Bhombal, A. Hameed, to Monsanto Company. Copolymers of recycled polyester. 5,703,134, Cl. 521-48.000.
Assa, Shlomo, to Northern Magnetics, Inc. DC cooled linear motor. 5,703,418, Cl. 310-12.000.
Associated Universities, Inc.: *See—*
Sugama, Toshifumi, 5,703,192, Cl. 528-39.000.
Asterix Inc.: *See—*
Kellam, Mark D.; and Kedem, Gershon, 5,702,868, Cl. 430-312.000.
Astle, Brian, to Intel Corporation. Block selection using motion estimation error. 5,703,966, Cl. 382-236.000.
Astra Aktiebolag: *See—*
Albrektsson, Björn; Carlsson, Lars; Jacobsson, Magnus; Röstlund, Tord; and Wennberg, Stig, 5,702,473, Cl. 623-22.000.
AT&T Corp.: *See—*
Miska, Richard A.; and Willcock, William T., 5,703,930, Cl. 379-57.000.
Atashroo, M. Ali, to Martin Marietta Corporation. Method of and apparatus for improved image correlation. 5,703,970, Cl. 382-278.000.
Atkinson, Charles Michael, to People You Need, Inc. Tabletop advertising display. 5,701,694, Cl. 40-493.000.
Atkinson, John P., to Washington University. Treatment method using recombinantly produced human membrane cofactor protein (MCP). 5,703,046, Cl. 514-12.000.
Atlantic Automotive Components, Inc.: *See—*
Schadel, Richard J., 5,702,558, Cl. 156-323.000.
Atlas Copco Berema Aktiebolag: *See—*
Brännström, Östen Kurt; and Fredin, Stig Bertil Artur, 5,702,112, Cl. 279-19.000.
Atmel Corporation: *See—*
Gould, Scott Whitney; Furtek, Frederick Curtis; Keyser, Frank Ray, III; Worth, Brian A.; and Zittritsch, Terrance John, 5,703,498, Cl. 326-40.000.
Rivoir, Roberto; Maloberti, Franco; and Torelli, Guido P., 5,703,588, Cl. 341-159.000.
Atrix Laboratories, Inc.: *See—*
Dunn, Richard L.; and Tipton, Arthur J., 5,702,716, Cl. 424-422.000.
Atronic Casino Technology Distribution GmbH: *See—*
Gauselmann, Michael, 5,702,302, Cl. 463-20.000.
Atton, Jean-Pierre: *See—*
Bernard, Patrick; and Atton, Jean-Pierre, 5,703,483, Cl. 324-173.000.
Atwood, Susan Melissa: *See—*
Cummins, Thomas J.; Atwood, Susan Melissa; Bergmeyer, Lynn; Findlay, John Bruce; Sutherland, John W.H.; and Kerschner, JoAnne H., 5,702,901, Cl. 435-6.000.
Au, Karin G.: *See—*
Modrich, Paul L.; Su, Shin-San; Au, Karin G.; Lahue, Robert S.; Cooper, Deani Lee; and Worth, Leroy, Jr., 5,702,894, Cl. 435-6.000.
Audinot, Valérie: *See—*
Lavielle, Gilbert; Muller, Olivier; Millan, Mark; and Audinot, Valérie, 5,703,070, Cl. 514-212.000.
Audoin, Michel; Moreau, Bertrand; and Colineau, Joseph, to Thomson-CSF. Reading device with cross-talk correction of two signal trains. 5,703,845, Cl. 369-44.410.
Audousset, Marie Pascale: *See—*
Lagrange, Alain; Vandenbosche, Jean Jacques; Cotteret, Jean; and Audousset, Marie Pascale, 5,703,266, Cl. 558-408.000.
Audry, Claudette: *See—*
Bernard, Patrick; Lecerf, André; Senyarich, Stéphane; and Audry, Claudette, 5,702,844, Cl. 429-223.000.
Auge, Jacques: *See—*
Brehm, Claude; Boniort, Jean-Yves; Nouchi, Pascale; and Auge, Jacques, 5,703,986, Cl. 385-123.000.
Ault, Patrick L.: *See—*
Pellegrin, Michael T.; Gavin, Patrick M.; Ault, Patrick L.; Loftus, James E.; Haines, Randall M.; and Morris, Virgil, 5,702,658, Cl. 264-172.140.
Ausimont, S.p.A.: *See—*
Cavallotti, Claudio; Nucida, Gilberto; and Troglia, Claudio, 5,703,242, Cl. 548-473.000.
Cavallotti, Claudio; Nucida, Gilberto; and Troglia, Claudio, 5,703,245, Cl. 548-473.000.
Austin, Charles E.; Dafforn, Kenneth R.; and McElhenney, Jay J., to Ethicon Endo-Surgery, Inc. Bioplar cutting and coagulation instrument. 5,702,390, Cl. 606-48.000.
Auterinen, Iiro: *See—*
Hiismäki, Pekka; and Auterinen, Iiro, 5,703,918, Cl. 376-458.000.
Automotive Products, plc: *See—*
Hales, Eric Charles, 5,701,655, Cl. 29-513.000.
Avakian, Kevin Michael: *See—*
Bushko, Dariusz Antoni; Avakian, Kevin Michael; Johnson, Bruce Graham; and Gerver, Michael Jonathan, 5,703,553, Cl. 335-215.000.
Averill, Robert G.; Cohen, Robert C.; and Zubok, Rafail, to Implex Corporation. Prosthetic device. 5,702,487, Cl. 623-23.000.
Avery Dennison Corporation: *See—*
Rettker, James Palmer; Peterson, William Edward; Chandler, Philip Bonn; and Lee, John Howard, 5,702,802, Cl. 428-192.000.
Avibank Mfg., Inc.: *See—*
Duran, John A., 5,702,214, Cl. 411-5.000.
Avis, Graham: *See—*
Kay, Stanley E.; Kaul, Pradeep; Parr, Michael I.; Avis, Graham; Corrigan, John E., III; Wendling, Daniel; and Mehta, Ashok D., 5,703,881, Cl. 370-468.000.
Avitall, Boaz. Expandable recording and ablation catheter system. 5,702,438, Cl. 607-122.000.
Avon Products, Inc.: *See—*
Duffy, John A., 5,703,122, Cl. 514-474.000.
Axelgaard, Jens: *See—*
Tippey, Keith Edward; and Axelgaard, Jens, 5,702,428, Cl. 607-41.000.
Axelgaard Manufacturing Company, Ltd.: *See—*
Tippey, Keith Edward; and Axelgaard, Jens, 5,702,428, Cl. 607-41.000.
Axis Biochemicals ASA: *See—*
Sundrehagen, Erling; and Frantzen, Frank, 5,702,952, Cl. 436-67.000.
Ayer, Atul Devdatt: *See—*
Merrill, Sonya; Ayer, Atul Devdatt; Chadha, Navjot; and Kuczynski, Anthony L., 5,702,725, Cl. 424-472.000.
B&H Manufacturing Company, Inc.: *See—*
Bright, Lyn E., 5,702,559, Cl. 156-450.000.
Baba, Yoko: *See—*
Yokoshima, Minoru; Ohkubo, Tetsuo; Sasahara, Kazunori; Sato, Yoneji; and Baba, Yoko, 5,702,820, Cl. 428-413.000.
Baba, Yoshitaka; Tadokoro, Motoo; and Yamawaki, Akifumi, to Sanyo Electric Co., Ltd. Manufacturing method of an active material suitable for non-sintered nickel electrodes for use in alkaline storage cells. 5,702,762, Cl. 427-212.000.
Babcock & Wilcox Company, The: *See—*
Bases, Gary John; Detzel, Roger A.; Devault, Douglas James; and Ferkile, William Joseph, 5,701,711, Cl. 52-506.030.
Babingui, Jean-Paul: *See—*
Durand, Ludovic; Babingui, Jean-Paul; Moulin, Claudie; Robert-Piessard, Sylvie; Le Baut, Guillaume; Scalbert, Elisabeth; Caignard, Daniel-Henri; and Renard, Pierre, 5,703,118, Cl. 514-456.000.
Bachman, John A.: *See—*
Cherry, Isaac R.; Bachman, John A.; Tanaka, David T.; So, Hangyick; and Henkin, Raphael, 5,701,894, Cl. 128-630.000.
Back, Lothar; Herrmann, Gebhard; Nesper, Markus; and Weisshaupt, Dieter, to Aesculap AG. Clamping ring for a surgical clip. 5,702,411, Cl. 606-157.000.
Badavas, Paul C.: *See—*
Hansen, Peter D.; and Badavas, Paul C., 5,704,011, Cl. 395-22.000.
Badour, Leonard C.; Stebe, Robert F.; and Haller, John L., to Gigatek Memory Systems. Tape cartridge with reduced tangential drive force. 5,702,065, Cl. 242-342.000.
Badour, Leonard C.: *See—*
Wrobel, Andrew; and Badour, Leonard C., 5,703,741, Cl. 360-132.000.
Badovinatz, Peter Richard; Chandra, Tushar Deepak; Kirby, Orvalle Theodore; and Pershing, John Arthur, Jr., to International Business Machines Corporation. Method for group leader recovery in a distributed computing environment. 5,704,032, Cl. 395-182.020.
Bae, You Han: *See—*
Cha, Younsik; Choi, Young Kweon; and Bae, You Han, 5,702,717, Cl. 424-425.000.
Bae-Lee, Myongsuk; Falk, Nancy; and Vasudevan, Tirucherai Varahan, to Lever Brothers Company, Division of Conopco, Inc. Heavy duty liquid detergent composition comprising cellulase stabilization system. 5,703,032, Cl. 510-320.000.
Bailey, Joseph A.; and Qureshi, Qadeer A., to Advanced Micro Devices, Inc. Fail-safe method to read a timer which is based on a particular clock with another asynchronous circit. 5,703,919, Cl. 377-16.000.
Bailey, Phillip: *See—*
Wu, Xingwei; Stiles, James Alexander Robert; Foo, Ken Kok; and Bailey, Phillip, 5,702,565, Cl. 156-643.100.
Bailey, Robert V. Handlebar locking device. 5,701,771, Cl. 70-233.000.
Bainbridge, Marlene Adele; and Holmes, Brian M., to Cobe Laboratories, Inc. Extracorporeal blood processing methods and apparatus. 5,702,357, Cl. 604-4.000.
Bajgrowicz, Jerzy A., to Givaudan-Roure (International) SA. Odorants. 5,703,250, Cl. 549-369.000.
Bakeman, Paul Evans, Jr.: *See—*
Voldman, Steven Howard; and Bakeman, Paul Evans, Jr., 5,703,747, Cl. 361-111.000.
Baker, Georgia Anna: *See—*
Caudal, Pierre; Mabe, Guy; Baker, Georgia Anna; and Dais, James Joseph, 5,702,555, Cl. 156-247.000.
Baker, Michelle R. Splash guard for use when bathing children. 5,701,615, Cl. 4-559.000.
Bakoledis, Andrew G., to GBR Systems Corporation. Insert feed mechanism. 5,702,097, Cl. 270-58.060.
Bakowski, Richard A.; and Eastman, Richard E., to New Venture Gear, Inc. Full-time transfer case with synchronized range shift mechanism and on-demand differentiation control. 5,702,321, Cl. 475-199.000.

Bal, Jagdeep: *See*—
Gazda, Jan; Bal, Jagdeep; and Bland, Christopher J., 5,703,540, Cl. 331-16.000.
Balch, Philip G.: *See*—
Davis, Richard L.; and Balch, Philip G., 5,701,105, Cl. 52-68.000.
Baldino, Frank: *See*—
Lewis, Michael E.; Kauer, James C.; Smith, Kevin R.; Callison, Kathleen V.; Baldino, Frank; Neff, Nicola; and Iqbal, Mohamed, 5,703,045, Cl. 514-12.000.
Baldwin Filters, Inc.: *See*—
Brown, Gene W.; and Rogers, Jeffrey E. D., 5,702,602, Cl. 210-342.000.
Bales, Joel P.: *See*—
Jackson, Kenneth S.; Persons, Charles D.; Krebs, Robert D.; Price, Gregory G.; and Bales, Joel P., 5,702,388, Cl. 606-54.000.
Ball Corporation: *See*—
Long, Eugene; Schmidt, Jeff; and Lynch, Frank, 5,702,491, Cl. 48-197.00R.
Ballard, Philip R. Score board for dart game. 5,702,102, Cl. 273-148.00R.
Baltazar, Lawrence C.; and Naumann, John O., to Constant Velocity Systems, Inc. Grinding bit having a novel grinding grip. 5,702,294, Cl. 451-541.000.
Bannwarth, Wilhelm; Caspers, Patrick; Le Grice, Stuart; and Mous, Jan, to Roche Diagnostic Systems, Inc. HIV-2 envelope polypeptides. 5,702,918, Cl. 435-69.300.
Bantel, Thomas E.: *See*—
Devitt, John W.; Edwards, Thomas R.; and Bantel, Thomas E., 5,703,362, Cl. 250-341.800.
Baragi, Vijaykumar; Boschelli, Diane Harris; Connor, David Thomas; and Renkiewicz, Richard Raymond, to Warner-Lambert Company. Benzylidene-lactone derivatives of fenamates and their thiocarbonyl analogs as inhibitors of proteoglycan degradation. 5,703,119, Cl. 514-459.000.
Baranowski, Robert; and Taylor, Matthew Whiting, to Motorola, Inc. Battery charger with power dissipation control. 5,703,470, Cl. 320-49.000.
Barath, Peter: *See*—
Popov, Alexander; and Barath, Peter, 5,702,412, Cl. 606-159.000.
Barclay, Alasdair G.: *See*—
King, Douglas L.; Barclay, Alasdair G.; and Wellman, Rockie C., 5,704,045, Cl. 395-235.000.
Barcock, Richard A., to Minnesota Mining and Manufacturing Company. Process of preparing monodispersed tabular silver halide emulsion. 5,702,879, Cl. 430-569.000.
Bardash, Michael J., to QEL Inc. Three dimensional imaging system using laser generated ultrashort x-ray pulser. 5,703,923, Cl. 378-87.000.
Barham, William F.: *See*—
Davis, James A.; Wasitis, William A.; and Barham, William F., 5,703,154, Cl. 524-525.000.
Barker, Thomas Earl. Hanging ornament for simulating human movement. 5,702,781, Cl. 428-16.000.
Barnard, Michael A., to Wescon Products Company. Cable control lever apparatus. 5,701,967, Cl. 180-19.300.
Barnett, Rick: *See*—
Thomas, Brian J.; Slayton, Gerald D.; Heiman, Jerome R.; and Barnett, Rick, 5,702,841, Cl. 429-88.000.
Baron, Bruce M.: *See*—
Salituro, Francesco G.; and Baron, Bruce M., 5,703,107, Cl. 514-561.000.
Baroni, Andrea; Mastrodomenico, Giovanni; Taliercio, Michele; Capocelli, Piero; Carro, Luigi; and Varambally, Rajamohan, to SGS-Thomson Microelectronics S.r.l. High performance single port RAM generator architecture. 5,703,821, Cl. 315-210.000.
Bar-Or, David; Kimmel, James S.; and Roth, Francis A. Laryngoscope and disposable blade therefor. 5,702,351, Cl. 600-190.000.
Barreca, Anthony: *See*—
Zara, Sebastian; and Barreca, Anthony, 5,701,626, Cl. 15-38.000.
Barry, Alexander Michael: *See*—
Asimopoulos, Nikos; Barry, Alexander Michael; and Nadler, Morton, 5,703,971, Cl. 382-282.000.
Barry, Michael A. Bag dispensing device. 5,702,027, Cl. 221-84.000.
Barry, Michael A.: *See*—
Johnston, Stephen A.; Barry, Michael A.; and Lai, Wayne C., 5,703,057, Cl. 514-44.000.
Bartel, Donald L.: *See*—
Burstein, Albert H.; and Bartel, Donald L., 5,702,458, Cl. 623-20.000.
Barth, Clyde H.; and Cramer, Charles E., to United States of America, Energy. Holding fixture for metallographic mount polishing. 5,702,293, Cl. 451-364.000.
Bartik, Tamás: *See*—
Eszenyi, Tibor; Sebők, Péter; Frank, László; Papp, Gyula; Timár, Tibor; and Bartik, Tamás, 5,703,113, Cl. 514-422.000.
Bases, Gary John; Detzel, Roger A.; Devault, Douglas James; and Ferkile, William Joseph, to Babcock & Wilcox Company, The. Hanger assembly for lagging panel. 5,701,711, Cl. 52-506.030.
BASF Aktiengesellschaft: *See*—
Baumann, Ernst; Rheinheimer, Joachim; Vogelbacher, Uwe Josef; Bratz, Matthias; Theobald, Hans; Gerber, Matthias; Westphalen, Karl-Otto; Walter, Helmut; and Rademacher, Wilhelm, 5,703,017, Cl. 504-227.000.
Kneip, Michael; and Danisch, Peter, 5,702,490, Cl. 8-94.230.
Meixner, Hubert; Reuther, Wolfgang; and Königstein, Volker, 5,702,517, Cl. 106-316.000.
Schefczik, Ernst; Grüttner-Merten, Sabine; Saling, Peter; Sens, Rüdiger; and Reichelt, Helmut, 5,703,238, Cl. 546-119.000.
Schweinzer, Jürgen; Fischer, Joachim; De Grave, Isidoor; and Kögel, Wolfram, 5,703,135, Cl. 521-60.000.
Steiner, Gerd; Munschauer, Rainer; Unger, Liliane; Teschendorf, Hans-Jürgen; and Höger, Thomas, 5,703,091, Cl. 514-300.000.
Basilio, Angela: *See*—
Morris, Sandra A.; Curotto, James E.; Bills, Gerald F.; Dreikorn, Sarah J.; Streicher, Stanley L.; Zink, Deborah L.; Thompson, John R.; Basilio, Angela; Pelaez, Fernando; Diez, Maria Teresa; and Vicente, Francisca, 5,702,929, Cl. 435-118.000.
Basset, Diego: *See*—
Matteazzi, Paolo; and Basset, Diego, 5,702,060, Cl. 241-175.000.
Batterton, Bill: *See*—
Quan, Clifton; Holbrook, Peter; Batterton, Bill; Fitzgerald, Pat; Roper, Dan; and Takaki, Min, 5,703,599, Cl. 342-368.000.
Baudino, Michael D., to Medtronic Inc. Implantable lead with wires carried by body. 5,702,437, Cl. 607-116.000.
Bauduin, François: *See*—
Bidiville, Marc; Raeber, Eric; Arreguit, Javier; Buczek, Harthmuth; Van Shaik, Floris A.; Bauduin, François; and O'Keeffe, Denis, 5,703,356, Cl. 250-221.000.
Bauer, Klaus: *See*—
Rösch, Wolfgang; Sohn, Erich; Bauer, Klaus; and Bieringer, Hermann, 5,703,008, Cl. 504-106.000.
Bauer, Rudolf, to Siemens Aktiengesellschaft. System for determining the exit direction of a flexible supply line from an autonomous mobile unit. 5,703,297, Cl. 73-756.000.
Baughman, Ray H.: *See*—
Cui, Changxing; Baughman, Ray H.; Iqbal, Zafar; Kazmar, Theodore R.; and Dahlstrom, David K., 5,702,629, Cl. 252-62.90R.
Baum, Kurt, to Fluorochem, Inc. Loop polymers. 5,703,163, Cl. 525-105.000.
Baumann, Ernst; Rheinheimer, Joachim; Vogelbacher, Uwe Josef; Bratz, Matthias; Theobald, Hans; Gerber, Matthias; Westphalen, Karl-Otto; Walter, Helmut; and Rademacher, Wilhelm, to BASF Aktiengesellschaft. 3-(Het) arylcarboxylic acid derivatives, their preparation and intermediates for their preparation. 5,703,017, Cl. 504-227.000.
Baumann, Frederick B.B.; and Spears, Louis E., to HiRel Connectors Inc. Self locking connector backshell. 5,702,263, Cl. 439-321.000.
Baumeister, Michael: *See*—
Reifenhäuser, Hans; and Baumeister, Michael, 5,702,730, Cl. 425-72.200.
Baumgartner, Richard A.: *See*—
Blalock, Travis N.; Baumgartner, Richard A.; Hornak, Thomas; and Beard, David, 5,703,353, Cl. 250-214.00C.
Baumgartner, Walter, to Sulzer Orthopadie AG. Process for implanting an invertebral prosthesis. 5,702,454, Cl. 623-17.000.
Baxter International Inc.: *See*—
Carlson, Gary D.; and Minot, Mark, 5,701,908, Cl. 128-713.000.
Giesler, Richard; Geissler, Ulrich C.; Stanford, Margaret E.; and Johnson, William E., 5,702,383, Cl. 604-409.000.
Rustad, Andre M.; and Davison, Paul O., 5,701,887, Cl. 128-204.170.
Baxter, Ralph W., Jr., to Dana Corporation. Hydromechanical system for limiting differential speed between differentially rotating members. 5,702,319, Cl. 475-88.000.
Baxter-Lowe, Lee Ann; and Gorski, Jack A., to Blood Center Research Foundation, Inc., The. Method for HLA typing. 5,702,885, Cl. 435-6.000.
Bayer AG: *See*—
Gittinger, Andreas; Wulff, Claus; Haupt, Heinrich; and Idel, Karsten-Josef, 5,703,204, Cl. 528-486.000.
Langstein, Gerhard; Bochmann, Manfred; and Dawson, David M., 5,703,182, Cl. 526-185.000.
Bayer Aktiengesellschaft: *See*—
Herold, Heiko; Wollenschläger, Axel; and von Schuckmann, Alfred, 5,702,362, Cl. 604-58.000.
Heuer, Lutz; Wachtler, Peter; Kugler, Martin; Schrage, Heinrich; and Sasse, Klaus, 5,703,103, Cl. 514-365.000.
Petersen, Uwe; Ruther, Michael; Schenke, Thomas; Bremm, Klaus Dieter; and Endermann, Rainer, 5,703,094, Cl. 514-312.000.
Wroblowsky, Heinz-Jürgen; and König, Klaus, 5,703,260, Cl. 558-8.000.
Bayer Corporation: *See*—
Pugia, Michael, 5,702,955, Cl. 436-135.000.
Bean, Dennis L.; Malone, Philip G.; Sykes, Melvin C.; Tom, Judy C.; and Walley, Donald M., to Army, The United States of America as respresented by the Secretary of the. Use of oriented tabular aggregate in manufacture of high-flexural-strength concrete. 5,702,651, Cl. 264-34.000.
Bean, Pamela: *See*—
Makhlouf, Samar; Pankow, Mark L.; Anderson, Byron E.; and Bean, Pamela, 5,702,904, Cl. 435-7.100.
Bear Archery, Inc.: *See*—
Simonds, Gary L., 5,701,880, Cl. 124-88.000.
Beard, David: *See*—
Blalock, Travis N.; Baumgartner, Richard A.; Hornak, Thomas; and Beard, David, 5,703,353, Cl. 250-214.00C.
Beard, David R., to Western Atlas International, Inc. Method and apparatus for correcting drift in the response of analog receiver components in induction well logging instruments. 5,703,772, Cl. 364-422.000.
Beasley, William E., Jr., to Sumitomo Electric Lightwave Corp. S-Z stranded optical cable with mid-span entry marker. 5,703,983, Cl. 385-104.000.
Beaty, Keith D.: *See*—
Lazzara, Richard J.; and Beaty, Keith D., 5,702,346, Cl. 433-173.000.

Beausang, James; and Walker, Robert, to Synopsys, Inc. Test readv compiler for design for test synthesis. 5,703,789, Cl. 364-489.000.
Beaver, Ted L., to Continental Plastic Containers, Inc. Adjoined dual-tube dispenser. 5,702,033, Cl. 222-94.000.
Beavo, Joseph A.; Corbin, Jackie D.; Ferguson, Kenneth M.; Francis, Sharron H.; Kadlecek, Ann; Loughney, Kate; McAllister-Lucas, Linda M.; Sonnenburg, William K.; and Thomas, Melissa K., to ICOS Corporation; Vanderbilt University; and University of Washington, Board of Regents of the. Cyclic GMP-binding, cyclic GMP-specific phosphodiesterase materials and methods. 5,702,936, Cl. 435-196.000.
Becker, Winfried: *See*—
von Schnering, Hans-Georg; Becker, Winfried; Schwarz, Martin; Hettich, Bernhard; Hartweg, Martin; Walz, Leonhard; and Popp, Thomas, 5,703,021, Cl. 505-501.000.
Beckman, Ralph A.; Schwartz, Stephen A.; Radosevich, Roseann; and Trammell, Michele P., to Hasbro, Inc. Toy feeding bottle assembly. 5,702,282, Cl. 446-267.000.
Becton Dickinson and Company: *See*—
Cover, Walter E.; and Davidner, Alan A., 5,702,367, Cl. 604-110.000.
Fraiser, Melinda S.; and Walker, George Terrance, 5,702,926, Cl. 435-91.200.
Martin, David Alan, 5,702,770, Cl. 427-475.000.
Becton Dickinson France S.A.: *See*—
Grimard, Jean Pierre, 5,702,019, Cl. 215-301.000.
Bednar, Richard D.: *See*—
Oliver, Joseph J.; Young, Christopher L.; and Bednar, Richard D., 5,703,569, Cl. 340-605.000.
Beekley Corporation: *See*—
Maxim, Rosemary S.; and Kasper, Hermann K., 5,702,128, Cl. 283-81.000.
Beesley, Laurence Robert: *See*—
Wilson, Robert; Beesley, Laurence Robert; and Flanagan, Robert H., 5,701,788, Cl. 76-104.100.
Begum, Paul G.; and Young, Gordon W., to Klever-Kart, Inc. Mobile advertising device with electronic transmission capabilities. 5,703,564, Cl. 340-539.000.
Behnke, Janica Sue: *See*—
Kamps, Richard Joseph; Behnke, Janica Sue; Chen, Fung-jou; and Radtke, Darnell Clarence, 5,702,571, Cl. 162-117.000.
Behr GmbH & Co.: *See*—
Hauser, Kurt, 5,701,854, Cl. 123-41.490.
Martin, Hans, 5,701,985, Cl. 192-58.681.
Behrendt, Jürgen: *See*—
Wonka, Boris; Behrendt, Jürgen; and Imhof, Gerald, 5,701,681, Cl. 34-97.000.
Bekki, Toshihiko: *See*—
Kakizaki, Masaaki; Hirano, Hirofumi; and Bekki, Toshihiko, 5,702,191, Cl. 400-582.000.
Belanger, Roger Robert: *See*—
Novick, Michael Alexander; and Belanger, Roger Robert, 5,702,100, Cl. 271-302.000.
Bell, Cecil Roland, to Monarch Knitting Machinery Corporation. Method and apparatus for inspecting and grading garments. 5,703,688, Cl. 356-430.000.
Bell, David A.: *See*—
Karunasiri, Tissa R.; Bell, David A.; and Ryan, Bruce M., 5,703,464, Cl. 320-19.000.
Bell, Eric: *See*—
Peter, Frederick H., Jr.; Bell, Eric; and Feldsein, Thomas M., 5,702,606, Cl. 210-646.000.
Bella, James; and Clark, William G., to TransCom Corporation. Re-useable emergency vehicle wiring harness and control system. 5,703,411, Cl. 307-10.100.
Bellani, Pietro, to Archimica SpA. Quinilone disulfide as intermediates. 5,703,233, Cl. 544-32.000.
Belt, Ronald A.: *See*—
Sharkey, J. Brian; Doblar, Randy A.; Bothwell, Frank E.; Belt, Ronald A.; and Page, Edward A., 5,703,835, Cl. 367-124.000.
Bemis, Andrew V.: *See*—
Kurtz, Anthony D.; Bemis, Andrew V.; Nunn, Timothy A.; and Ned, Alexander A., 5,702,619, Cl. 216-2.000.
Bencheck, Mike: *See*—
Brownmiller, Curtis; Bencheck, Mike; Tran, Minh; Branton, Robert; DeMoss, Mark; and Landon, Steve, 5,704,036, Cl. 395-183.190.
Benco, John S.: *See*—
Foos, Joseph S.; and Benco, John S., 5,702,575, Cl. 204-292.000.
Bender, Brian: *See*—
Hahn, Norbert; and Bender, Brian, 5,702,223, Cl. 414-401.000.
Bender, Karl: *See*—
Kuesell, Matthias; Duell, Andreas; Bender, Karl; and Borchert, Kay, 5,703,282, Cl. 73-115.000.
Bendett, Mark P.: *See*—
Farrier, Michael G.; Kamasz, Stacy R.; Ma, Fred S. F.; and Bendett, Mark P., 5,703,639, Cl. 348-241.000.
Bennett, C. Frank; and Dean, Nicholas, to Isis Pharmaceuticals, Inc. Oligonucleotide modulation of protein kinase C. 5,703,054, Cl. 514-44.000.
Bennett, Frank: *See*—
Saksena, Anil K.; Girijavallabhan, Viyyoor M.; Lovey, Raymond G.; Pike, Russell E.; Wang, Haiyan; Liu, Yi-Tsung; Ganguly, Ashit K.; and Bennett, Frank, 5,703,079, Cl. 514-252.000.
Saksena, Anil K.; Girijavallabhan, Viyyoor M.; Lovey, Raymond G.; Pike, Russell E.; Wang, Haiyan; Liu, Yi-Tsung; Ganguly, Ashit K.; and Bennett, Frank, 5,703,236, Cl. 544-366.000.
Bennington, William: *See*—
Giles, Joseph M.; Bennington, William; and Brucker, Steven, 5,702,015, Cl. 215-232.000.
Benore, Randolph C.; Gagliano, Joseph; Gibson, Shawn; Grosswiller, Leo J.; McGeorge, Gram; and Neidlinger, Donald, to Diebold, Incorporated. Electronic security system. 5,701,828, Cl. 109-56.000.
Benveniste, Victor M.: *See*—
Chen, Jiong; and Benveniste, Victor M., 5,703,375, Cl. 250-492.210.
Benz, Rolf: *See*—
Treutler, Christoph; Benz, Rolf; Muenzel, Horst; Schmidt, Steffen; Reihlen, Eckart; and Lock, Andreas, 5,703,287, Cl. 73-204.260.
Berberich, James William; Berg, Lowell James; Boutaghou, Zine-Eddine; Heath, John S.; and Neubauer, Jerry Lee, to International Business Machines Corporation. Disc drive having an integral gasket and continuous outer perimeter shock bumper. 5,703,734, Cl. 360-97.020.
Bercovici, Joseph: *See*—
Gelmont, Mark; Bercovici, Joseph; and Oren, Jakob, 5,703,274, Cl. 562-475.000.
Berg, Lowell James: *See*—
Berberich, James William; Berg, Lowell James; Boutaghou, Zine-Eddine; Heath, John S.; and Neubauer, Jerry Lee, 5,703,734, Cl. 360-97.020.
Berg, Ronald. Ejector bucket. 5,702,227, Cl. 414-704.000.
Berger, Bernhard: *See*—
Nickel, Gary B.; and Berger, Bernhard, 5,703,226, Cl. 536-107.000.
Berger, Paul D.; and Jimenez, Antonio M., to Monsanto Company. Pesticidal compositions of polyoxyalkylene alkylamine surfactants having reduced eye irritation. 5,703,015, Cl. 504-206.000.
Bergmann, Ernest Eisenhardt, to Lucent Technologies Inc. Method and apparatus for packaging optical components. 5,703,992, Cl. 385-139.000.
Bergmeyer, Lynn: *See*—
Cummins, Thomas J.; Atwood, Susan Melissa; Bergmeyer, Lynn; Findlay, John Bruce; Sutherland, John W.H.; and Kerschner, JoAnne H., 5,702,901, Cl. 435-6.000.
Berlanga, José Maria Castellano: *See*—
Braña, Miguel Fernandez; Berlanga, José Maria Castellano; and Romerdahl, Cynthia, 5,703,089, Cl. 514-284.000.
Berlex Laboratories, Inc.: *See*—
Andrews, William H.; Morser, Michael J.; and Vilander, Laura R., 5,702,931, Cl. 435-172.300.
Berliner, David L; Erwin, Robert L.; and McGee, David R., to Biosource Technologies, Inc. Therapeutic uses of melanin. 5,703,051, Cl. 514-21.000.
Berman, Terry: *See*—
Yang, Angel A.; Druz, Loren L.; and Berman, Terry, 5,702,745, Cl. 426-242.000.
Bernard, Bruno: *See*—
Charpentier, Bruno; Vion, Michèle; Bernard, Bruno; and Maignan, Jean, 5,702,710, Cl. 424-401.000.
Bernard, Patrick; Lecerf, André; Senyarich, Stéphane; and Audry, Claudette, to SAFT. Nickel electrode for an alkaline storage cell. 5,702,844, Cl. 429-223.000.
Bernard, Patrick; and Atton, Jean-Pierre, to Electricite de France-Service National. Pulse tachometer with sender connected to inductive proximity sensor. 5,703,483, Cl. 324-173.000.
Berney, Jean-Claude, to Gay Freres S.A. Electronic memory device having a non-peripheral contact for reading and writing. 5,703,395, Cl. 257-681.000.
Bernhard, Klaus: *See*—
Vogt, Reiner; Bernhard, Klaus; and Pfaff, Gerhard, 5,702,518, Cl. 106-439.000.
Bernoux, Franck: *See*—
Merle, Jean-Pierre; Lassalle, Martine; Bernoux, Franck; and Adda, Maurice, 5,703,643, Cl. 348-341.000.
Berroth, Manfred: *See*—
Wang, Zhigong; and Berroth, Manfred, 5,703,912, Cl. 375-354.000.
Berry, Joel L.; Ferrario, Carlos M.; Dean, Richard H.; and Newman, Virginia S., to Wake Forest University. Expandable, intraluminal stents. 5,702,419, Cl. 606-198.000.
Berry, Kyle R., to Hewlett-Packard Company. Computer graphics system having per pixel depth cueing. 5,704,025, Cl. 395-131.000.
Bertin, Claude Louis; Howell, Wayne John; Hedberg, Erik Leigh; Kalter, Howard Leo; and Kelley, Gordon Arthur, Jr., to International Business Machines Corporation. Integrated mulitchip memory module, structure and fabrication. 5,702,984, Cl. 437-208.000.
Bertin, Giorgio; and Accatino, Luciano, to Cselt- Centro Studi E Laboratori Telecomunicazioni S.P.A. Dual-mode cavity for waveguide bandpass filter. 5,703,547, Cl. 333-209.000.
Bertram, Michael: *See*—
Vilsmeier, Stefan; Lippstreu, Stefan; and Bertram, Michael, 5,702,406, Cl. 606-130.000.
Bertva, Don Lee: *See*—
Ford, James Arthur; Bertva, Don Lee; Kennedy, James Murrell; and Presdorf, Ronald Lynn, 5,701,940, Cl. 160-84.050.
Besma Beschichtungsmassen GmbH: *See*—
Klosel, Egon, 5,702,994, Cl. 442-229.000.
Best Cutting Die Company: *See*—
Okonski, Frank, 5,701,789, Cl. 83-13.000.

Bestera K.K.: *See—*
Yoshino, Yoshihide, 5,701,652, Cl. 29-426.300.
Bestop, Inc.: *See—*
Essig, Richard C., 5,702,147, Cl. 296-106.000.
Beth Israel Deaconess Medical Center, Inc.: *See—*
Sharpe, Richard J.; Arndt, Kenneth A.; Galli, Stephen J.; Meltzer, Peter C.; Razdan, Raj K.; and Sard, Howard P., 5,703,088, Cl. 514-278.000.
Bezwada, Rao S.; Arnold, Steven C.; and Ace, Constance, to Ethicon, Inc. Absorbable copolymers and blends of 6,6-dialkyl-1,4-dioxepan-2-one and its cyclic dimer. 5,703,200, Cl. 528-354.000.
Bezy, E. William; and Chenevich, William, to Visa International Service Association. Electronic funds confirmation at point of transaction. 5,703,344, Cl. 235-379.000.
Bhattacharya, Debashis, to Yale University. Counterflow pipeline processor architecture for semi-custom application specific IC's. 5,704,054, Cl. 395-384.000.
Bhombal, A. Hameed: *See—*
Asrar, Jawed; and Bhombal, A. Hameed, 5,703,134, Cl. 521-48.000.
BHP Steel (JLA) Pty Ltd.: *See—*
Strezov, Lazar; Mahapatra, Rama Ballav; Sylva, Fred de; and Mukunthan, Kannappar, 5,701,948, Cl. 164-480.000.
Bi, Jieliang. Clam extract preparation, the method of preparation and use thereof. 5,702,728, Cl. 424-547.000.
Biberger, Maximilian; and Conci, Dennis, to Varian Associates, Inc. Method and apparatus for improved low pressure collimated magnetron sputter deposition of metal films. 5,702,573, Cl. 204-192.120.
Bible, James Richard: *See—*
Ungefug, Gary Allan; Wicker, Benjamin Marvin; Bible, James Richard; and Worley, Billy Thomas, Jr., 5,703,176, Cl. 525-369.000.
Bidiville, Marc; Raeber, Eric; Arreguit, Javier; Buczek, Harthmuth; Van Shaik, Floris A.; Baudoin, François; and O'Keeffe, Denis, to Logitech, Inc. Pointing device utilizing a photodetector array. 5,703,356, Cl. 250-221.000.
Bieberdorf, John W.; Wisehart, John C.; and Draper, Greg W., to Charles Machine Works, Inc., The. Roll independent variable inductance inclinometer. 5,703,484, Cl. 324-207.220.
Biedermann, Lutz; and Harms, Jürgen. Space holder, in particular for a vertebra or an intervertebral disk. 5,702,451, Cl. 623-17.000.
Bieringer, Hermann: *See—*
Rösch, Wolfgang; Sohn, Erich; Bauer, Klaus; and Bieringer, Hermann, 5,703,008, Cl. 504-106.000.
Bierman, Steven F., to Venetec International, Inc. Tube fitting anchoring system. 5,702,371, Cl. 604-180.000.
Bietry, Joseph R.; Estelle, Lee R.; and Ludington, Paul D., to Eastman Kodak Company. Optical magnifier. 5,703,721, Cl. 359-646.000.
Biggie, John; and Biggie, Lydia B., to Sentech Medical Systems, Inc. Pulsating operating table cushion. 5,701,622, Cl. 5-713.000.
Biggie, Lydia B.: *See—*
Biggie, John; and Biggie, Lydia B., 5,701,622, Cl. 5-713.000.
Biggs, Kenneth L.; and Price, John Cairl, to West Bond Inc. Angled wire bonding tool and alignment method. 5,702,049, Cl. 228-105.000.
Bigus, Joseph Phillip, to International Business Machines Corporation. Adaptive resource allocation using neural networks. 5,704,012, Cl. 395-22.000.
Bikson, Benjamin; Giglia, Salvatore; Nicholas, Patrick Samuel, Jr.; and Ford, Cheryl Ann, to Praxair Technology, Inc. Structure enhancing hollow fiber module. 5,702,601, Cl. 210-321.790.
Billard, Jean-Luc: *See—*
Dieras, Francis; and Billard, Jean-Luc, 5,702,360, Cl. 604-22.000.
Billica, Roger D.: *See—*
Simmons, Scott C.; Pohl, John R.; Guess, Terrell M.; Rushing, Douglas A.; Caputo, Michael P., Jr.; and Billica, Roger D., 5,701,904, Cl. 128-670.000.
Billimack, James J.: *See—*
Allott, Mark T.; Billimack, James J.; and Moritz, Timothy C., 5,702,660, Cl. 264-242.000.
Bills, Gerald F.: *See—*
Morris, Sandra A.; Curotto, James E.; Bills, Gerald F.; Dreikorn, Sarah J.; Streicher, Stanley L.; Zink, Deborah L.; Thompson, John R.; Basilio, Angela; Pelaez, Fernando; Diez, Maria Teresa; and Vicente, Francisca, 5,702,929, Cl. 435-118.000.
bima Industrie-Service GmbH: *See—*
Dietrichs, Alexander, 5,701,714, Cl. 52-665.000.
Binford, John Dudley: *See—*
Hegemier, Timothy Alan; and Binford, John Dudley, 5,701,861, Cl. 123-193.200.
Bio Merieux: *See—*
Mabilat, Claude; and Christen, Richard, 5,703,217, Cl. 536-23.100.
Bio-Rad Laboratories, Inc.: *See—*
McNeil, John R.; Naqvi, S. Sohail H.; and Wilson, Scott R., 5,703,692, Cl. 356-445.000.
Biomedical Engineering Trust I: *See—*
Pappas, Michael J.; and Buechel, Frederick F., 5,702,461, Cl. 623-20.000.
Pappas, Michael J.; and Buechel, Frederick F., 5,702,466, Cl. 623-20.000.
BIOMET Deutschland GmbH: *See—*
Goymann, Volkmar; Anapliotis, Emmanuel; and Darga, Juergen, 5,702,484, Cl. 623-23.000.
Biomet, Inc.: *See—*
Sarver, David; D'Alessio, Keith; and D'Alessio, Raymond A., 5,702,656, Cl. 264-102.000.
Bioresearch, Inc.: *See—*
Kurtz, Robert J.; and Fuller, William D., 5,703,053, Cl. 514-27.000.
Biosource Technologies, Inc.: *See—*
Berliner, David L; Erwin, Robert L.; and McGee, David R., 5,703,051, Cl. 514-21.000.
BioTime, Inc.: *See—*
Segall, Paul E.; Sternberg, Hal; Waitz, Harold D.; and Segall, Judith M., 5,702,880, Cl. 435-1.200.
Birch, Nicholas: *See—*
Wise, Adrian P.; and Birch, Nicholas, 5,703,793, Cl. 364-514.00R.
Birch, Stephen Michael; Gavrel, Gerard Michel; and Memon, Zaffar Iqbal, to Digital Equipment Corporation. Method of manufacture of an interconnect stress test coupon. 5,701,667, Cl. 29-852.000.
Birger, Boris L.: *See—*
Paramonov, Vladimir A.; Tychinin, Anatolij I.; Moroz, Anatolij I.; Birger, Boris L.; Frommann, Klaus; Haupt, Werner; and Ottersbach, Walter, 5,702,528, Cl. 118-623.000.
Birgmeir, Klaus; and Waibel, Hermann, to Agfa-Gevaert Aktiengesellschaft. Method of enhancing a print of a transparency. 5,703,700, Cl. 358-487.000.
Birkhan, Horst; Fender, Michael; Irrgang, Bernhard; Löffert, Christiane; and Schässler, Simone, to Witco Surfactants GmbH. Highly concentrated aqueous fabric softners having improved storage stability. 5,703,035, Cl. 510-423.000.
Birkle, Siegfried: *See—*
Sezi, Recai; Borndoerfer, Horst; Ahne, Hellmut; Birkle, Siegfried; Kuehn, Eberhard; Leuschner, Rainer; Rissel, Eva; and Sebald, Michael, 5,703,186, Cl. 526-272.000.
Bischel, William K.: *See—*
Brinkman, Michael J.; Deacon, David A.G.; and Bischel, William K., 5,703,710, Cl. 359-283.000.
Bischof, Norbert, to Siemens Aktiengesellschaft. X-radiator with constraint-cooled rotating anode. 5,703,926, Cl. 378-200.000.
Bishenden, Warren J., to Exco Technologies, Ltd. Die cast mould apparatus. 5,701,947, Cl. 164-341.000.
Bishop-Jones, Brenda J.: *See—*
Allen, Ronald L.; Bishop-Jones, Brenda J.; Cykana, Michael J.; Lui, Eddie K.; and Sipe, Stanley Wayne, 5,703,783, Cl. 364-478.010.
Bisserie, Michel. Intervertebral disk prosthesis. 5,702,450, Cl. 623-17.000.
Bitron S.P.A.: *See—*
Guidi, Guido; Boezi, Giampaolo; and De Filippis, Pietro, 5,703,549, Cl. 335-78.000.
Black & Decker Inc.: *See—*
Webster, Craig; and Sadler, John, 5,701,632, Cl. 15-330.000.
Blaese, Armin: *See—*
Erath, Herbert; and Blaese, Armin, 5,702,212, Cl. 408-153.000.
Blair, Leslie Mitchell, to Du Pont de Nemours, E. I., and Company. Fluoropolymer extrusion process. 5,703,185, Cl. 526-247.000.
Blair, Steven: *See—*
Smith, Adlai H.; Hunter, Robert O., Jr.; McArthur, Bruce; Blair, Steven; and Wilkinson, Jim, 5,702,662, Cl. 264-400.000.
Blalock, Travis N.; Baumgartner, Richard A.; Hornak, Thomas; and Beard, David, to Hewlett-Packard Company. Offset removal and spatial frequency band filtering circuitry for photoreceiver signals. 5,703,353, Cl. 250-214.00C.
Blanchard, John: *See—*
Sacchettini, James; Blanchard, John; and Jacobs, William R., Jr., 5,702,935, Cl. 435-193.000.
Blanchard, Scott David; Kallman, Kurt Albert; and Bucher, William Alexander, to Motorola, Inc. Method and apparatus for adaptive filtering in a high interference environment. 5,703,903, Cl. 375-232.000.
Bland, Christopher J.; Gazda, Jan; and Olsen, Barry E., to MicroClock Incorporated. Phase-locked loop clock circuit for generation of audio sampling clock signals from video reference signals. 5,703,537, Cl. 331-1.00A.
Bland, Christopher J.: *See—*
Gazda, Jan; Bal, Jagdeep; and Bland, Christopher J., 5,703,540, Cl. 331-16.000.
Blandino, Thomas P., to Locus Incorporated. Compact temperature stabilized crystal oscillator. 5,703,542, Cl. 331-70.000.
Blank, Helmut: *See—*
Sari, Osman; and Blank, Helmut, 5,701,874, Cl. 123-571.000.
Blankenbecler, Richard. Segmented axial gradinet array lens. 5,703,722, Cl. 359-653.000.
Blasberg, Ronald G.; and Tjuvajev, Juri, to Sloan-Kettering Institute for Cancer Research. Non-invasive imaging of gene transfer. 5,703,056, Cl. 514-44.000.
Blaser, Martin J.: *See—*
Thompson, Stuart A.; and Blaser, Martin J., 5,703,219, Cl. 536-23.200.
Bledstein, Adrien Janis. Multipurpose face mask that maintains an airspace between the mask and the wearer's face. 5,701,892, Cl. 128-206.190.
Bleeke, William F., to Xolox Corporation. Magnetic single point contact latch assembly. 5,703,735, Cl. 360-105.000.
Blickhan, Joseph David: *See—*
Davis, Alan Merle; and Blickhan, Joseph David, 5,703,536, Cl. 330-289.000.
Blin, Philippe: *See—*
Mahin, Daniel; and Blin, Philippe, 5,702,109, Cl. 277-34.000.
Bloder, Hans, to Bloder, Hans. Device for roping down or hoisting persons and/or loads from or to great heights. 5,701,972, Cl. 182-234.000.
Blomquist, Cecile: *See—*

Collins, Mark L.; Blomquist, Cecile; Lombardo, Massimo; and Eldredge, John, 5,702,896, Cl. 435-6.000.
Blood Center Research Foundation, Inc., The: *See—*
Baxter-Lowe, Lee Ann; and Gorski, Jack A., 5,702,885, Cl. 435-6.000.
Bloom, Richard L.: *See—*
Tompkins, Thomas L.; Shirk, Ryan C.; Schroeer, Steven C.; Merry, Richard P.; Ista, Troy K.; and Bloom, Richard L., 5,702,494, Cl. 55-498.000.
Blount, David H. Silicon and phosphorus containing compositions. 5,703,258, Cl. 556-404.000.
Bluemel, Frederick: *See—*
Bluemel, Mark R.; Lim, King W.; and Bluemel, Frederick, 5,703,785, Cl. 364-479.140.
Bluemel, Mark R.; Lim, King W.; and Bluemel, Frederick. Inventory control apparatus and method of using same. 5,703,785, Cl. 364-479.140.
Blum, Ronald D.: *See—*
Gupta, Amitava; Blum, Ronald D.; Iyer, Venkatramani S.; and Nagg, Paul J., 5,702,819, Cl. 428-412.000.
Blumenthal, Roc: *See—*
Maniar, Papu D.; Blumenthal, Roc; Klein, Jeffrey L.; and Wu, Wei, 5,702,981, Cl. 437-192.000.
Blundell, Barry George. Three dimensional display system. 5,703,606, Cl. 345-22.000.
Board of Governors for Higher Education, State of Rhode Island and Providence Plantations, The: *See—*
Abushanab, Elie; and Pragnacharyulu, Palle V. P., 5,703,084, Cl. 514-261.000.
Board of Regents The University of Texas System: *See—*
Johnston, Stephen A.; Barry, Michael A.; and Lai, Wayne C., 5,703,057, Cl. 514-44.000.
Schenck, Robert C.; and Agrawal, C. Mauli, 5,702,446, Cl. 623-16.000.
Wilson, Steven E., 5,703,047, Cl. 514-12.000.
Boaz, Premakaran Tucker, to Ford Motor Company. Method of making water based paint and formed glazing with paint thereon. 5,702,520, Cl. 106-600.000.
Bochmann, Manfred: *See—*
Langstein, Gerhard; Bochmann, Manfred; and Dawson, David M., 5,703,182, Cl. 526-185.000.
Bocko, Peter L.; Eid, Bernard A.; Johnson, Ronald E.; Lock, William E.; Shoup, Robert D.; and Themont, Jean-Pierre, to Corning Incorporated. Method of printing a color filter. 5,701,815, Cl. 101-211.000.
Boddy, Ian; Potts, Matthew D.; and Foote, Keith D., to Lowell Engineering Corporation. Exterior mirror with indexing and control pivoting. 5,703,731, Cl. 359-841.000.
Boddy, Ian; Potts, Matthew D.; Foote, Keith D.; and Ruse, James, to Lowell Engineering Corporation. Exterior mirror with indexing and control pivoting. 5,703,732, Cl. 359-841.000.
Bodenseewerk Gerätetechnik GmbH: *See—*
Stoll, Alfred; Gulitz, Wolfgang; Tessari, Hans; and Eckhardt, Reiner, 5,702,068, Cl. 244-3.160.
Bodenseewerk Perkin-Elmer GmbH: *See—*
Hoffmann, Erwin; Lüdke, Christian; and Skole, Jochen, 5,703,342, Cl. 219-497.000.
Bodson, Guy: *See—*
Cossement, Eric; Bodson, Guy; and Gobert, Jean, 5,703,082, Cl. 514-255.000.
Boehme, Dietmar, to Ford Global Technologies, Inc. Accumulator having a heat insulating cover. 5,701,759, Cl. 62-503.000.
Boehringer Mannheim GmbH: *See—*
Höltke, Hans-Joachim; Seibl, Rudolf; Schmitz, Gudrun; Schöler, Hans Robert; Kessler, Christoph; and Mattes, Ralf, 5,702,888, Cl. 435-6.000.
Boehringer, Wilfred E.; Verhoeven, Teunes; and Hutz, William V., to McDonnell Douglas Corporation. Mechanically redundant actuator assembly. 5,701,801, Cl. 92-166.000.
Boeing Company, The: *See—*
Dougherty, Robert P., 5,702,231, Cl. 415-119.000.
Groves, Oliver J.; Jensen, Donald A.; Nelson, Thomas S.; and Thomas, Joel M., 5,701,651, Cl. 29-281.500.
Houck, Andrew W.; and Gibbs, Stephen R., 5,703,774, Cl. 364-424.060.
Hulscher, Mark E., 5,702,030, Cl. 221-254.000.
Boeing North American, Inc.: *See—*
Fisher, Steven C.; Adams, Theodore C.; Stangeland, Maynard L.; Rietdyk, Jacob; and Winans, Paul R., 5,701,670, Cl. 29-890.010.
White, Stanley A., 5,703,596, Cl. 342-194.000.
Boening, Werner: *See—*
Fleck, Rod; and Boening, Werner, 5,704,048, Cl. 395-306.000.
Boettcher, Richard R.: *See—*
Rommel, Jeffrey S.; Traxler, James T.; and Boettcher, Richard R., 5,703,248, Cl. 549-62.000.
Boezi, Giampaolo: *See—*
Guidi, Guido; Boezi, Giampaolo; and De Filippis, Pietro, 5,703,549, Cl. 335-78.000.
Bøgesø, Klaus Peter: *See—*
Perregaard, Jens Kristian; Moltzen, Ejner Knud; Andersen, Kim; Pedersen, Henrik; Bøgesø, Klaus Peter; Pernet, Andre; Bopp, Barbara; Mulford, Darcy; and Sakamoto, Kiyoshi, 5,703,087, Cl. 514-278.000.
Boggs, Andrew Keith; Hoang, Quy N.; Jacobs, Joe; Mullen, John Mark; Purrington, Challis; and Weaver, Laura A., to International Business Machines Corporation. Intelligent concentrator for multiple speed data communications systems. 5,703,872, Cl. 370-252.000.
Boianjiu, Gideon, to Iscar Ltd. Cutting tool with replaceable cutting insert. 5,702,210, Cl. 407-100.000.
Boileau, Pascal: *See—*
Walch, Gilles; and Boileau, Pascal, 5,702,447, Cl. 623-16.000.
Walch, Gilles; and Boileau, Pascal, 5,702,457, Cl. 623-19.000.
Bolden, Scott: *See—*
Kennedy, Timothy J.; Stowell, Davin; and Bolden, Scott, 5,702,061, Cl. 241-93.000.
Bonaldo, Maria DeFatima; and Soares, Marcelo Bento, to Trustees of Columbia University in The City of New York, The. Procedure for normalization of cDNA libraries. 5,702,898, Cl. 435-6.000.
Bonaquist, Dante Patrick: *See—*
Howard, Henry Edward; and Bonaquist, Dante Patrick, 5,701,763, Cl. 62-644.000.
Bonar Packaging, Inc.: *See—*
Smiley, Gregory B., 5,702,339, Cl. 493-196.000.
Bond, Philip L.: *See—*
McKibben, Kenneth D.; Gould, Alan P.; Wuepper, Thomas E.; Minor, Daniel D.; Salgat, Mark T.; Marthaler, David; Speaks, Jackie M.; Macheske, Robert L.; Good, David; Gillette, Richard A.; Bond, Philip L.; Coyle, Donald C.; Rentfrow, Darrell; Stiens, Thomas O.; and Stevens, Larry M., 5,701,945, Cl. 164-130.000.
Boniort, Jean-Yves: *See—*
Brehm, Claude; Boniort, Jean-Yves; Nouchi, Pascale; and Auge, Jacques, 5,703,986, Cl. 385-123.000.
Bonnefoy, Pierre, to IMRA Europe SA. Ultrasonic sensor and method of using such a sensor. 5,703,834, Cl. 367-99.000.
Bonnell, Steven W.: *See—*
Pavur, Carol P.; Harper, Dennis; Bonnell, Steven W.; Norkus, James F.; Hartery, William F.; and Galloway, Lawrence W., 5,702,133, Cl. 192-80.000.
Bonner, Craig Ronald, to Carter Holt Harvey Limited. Bin of laminated material. 5,702,052, Cl. 229-4.500.
Bonnet, Jacqueline: *See—*
Wierzbicki, Michel; Sauveur, Frédéric; Boussard, Marie-Francoise; Bonnet, Jacqueline; and Sabatini, Massimo, 5,703,074, Cl. 514-231.500.
Bonnet, Jean-Luc: *See—*
Legay, Thierry; Bonnet, Jean-Luc; and Geroux, Laurence, 5,702,424, Cl. 607-9.000.
Bonte, Geert I. V.; and De Kock, Johannes C. J., to DSM N.V. Process for the removal of mercury. 5,702,590, Cl. 208-251.00R.
Boone, Joseph T.; Hillerich, Thomas Anthony, Jr.; Grispart, Gerald Robert; and Ydoate, Edward, to Sandvik Sorting Systems, Inc. Conveyor for removing an article conveyed abreast of another article. 5,701,989, Cl. 198-445.000.
Bopp, Barbara: *See—*
Perregaard, Jens Kristian; Moltzen, Ejner Knud; Andersen, Kim; Pedersen, Henrik; Bøgesø, Klaus Peter; Pernet, Andre; Bopp, Barbara; Mulford, Darcy; and Sakamoto, Kiyoshi, 5,703,087, Cl. 514-278.000.
Borchert, Kay: *See—*
Kuesell, Matthias; Duell, Andreas; Bender, Karl; and Borchert, Kay, 5,703,282, Cl. 73-115.000.
Borgis, Livio, to U.S. Philips Corporation. Electric mains voltage lamp. 5,703,428, Cl. 313-318.100.
Borlongan, Cesario V.: *See—*
Sanberg, Paul R.; Cameron, Don F.; and Borlongan, Cesario V., 5,702,700, Cl. 424-93.100.
Borndoerfer, Horst: *See—*
Sezi, Recai; Borndoerfer, Horst; Ahne, Hellmut; Birkle, Siegfried; Kuehn, Eberhard; Leuschner, Rainer; Rissel, Eva; and Sebald, Michael, 5,703,186, Cl. 526-272.000.
Borsenik, Frank D.: *See—*
Malek, Mehrdad M.; Kadlic, Thomas P.; and Borsenik, Frank D., 5,702,104, Cl. 273-292.000.
Borseth, Donald; and McCall, David, to Diversey Lever, Inc. Caustic-stable modified polycarboxylate compound and method of making the same. 5,703,175, Cl. 525-340.000.
Børseth, Knut, to Petroleum Geo-Services AS. Production vessel with sinusoidal waterline hull. 5,701,835, Cl. 114-56.000.
Bos, Edward Albert: *See—*
Richardson, Alan David; Early, Paul Timothy; Brown, Larry Thomas; Ortmann, Walter Joseph; and Bos, Edward Albert, 5,701,869, Cl. 123-497.000.
Bosch-Siemens Hausgeraete GmbH: *See—*
Stickel, Ernst, 5,701,952, Cl. 165-168.000.
Boschelli, Diane Harris: *See—*
Baragi, Vijaykumar; Boschelli, Diane Harris; Connor, David Thomas; and Renkiewicz, Richard Raymond, 5,703,119, Cl. 514-459.000.
Boston Scientific Corporation: *See—*
Ravenscroft, Adrian C., 5,702,418, Cl. 606-198.000.
Bothwell, Frank E.: *See—*
Sharkey, J. Brian; Doblar, Randy A.; Bothwell, Frank E.; Belt, Ronald A.; and Page, Edward A., 5,703,835, Cl. 367-124.000.
Bottari, Marco, to Mariplast S.p.A. Yarn support with means for anchoring a yarn end. 5,702,063, Cl. 242-125.200.
Boucher, Erin. Towable watercraft. 5,702,278, Cl. 441-66.000.
Boucheteil, Micheline: *See—*
Bourboulou, Yves; Boucheteil, Micheline; Philippon, Céline; and Tronchet, Jean, 5,701,937, Cl. 141-244.000.
Boudreau, Eric R.: *See—*

Menon, Murali M.; and Boudreau, Eric R., 5,703,964, Cl. 382-228.000.
Bourboulou, Yves; Boucheteil, Micheline; Philippon, Céline; and Tronchet, Jean, to Pharmacia & Upjohn Aktiebolag. Fluid distribution system. 5,701,937, Cl. 141-244.000.
Bourne, George W., IV: *See*—
Sylvanowicz, John T.; and Bourne, George W., IV, 5,702,370, Cl. 604-256.000.
Bourscheid, Georges; and Mutteach, Jim, to Luxembourg Patent Company, S.A. Valve with built-in level gauge. 5,701,932, Cl. 137-558.000.
Boussard, Marie-Francoise: *See*—
Wierzbicki, Michel; Sauveur, Frédéric; Boussard, Marie-Francoise; Bonnet, Jacqueline; and Sabatini, Massimo, 5,703,074, Cl. 514-231.500.
Boutaghou, Zine-Eddine: *See*—
Berberich, James William; Berg, Lowell James; Boutaghou, Zine-Eddine; Heath, John S.; and Neubauer, Jerry Lee, 5,703,734, Cl. 360-97.020.
Bovy, Philippe R.; Rico, Joseph G.; Rogers, Thomas E.; Tjoeng, Foe S.; and Zablocki, Jeffery A., to G. D. Searle & Co.; and Monsanto Company, The. Substituted β-amino acid derivatives useful as platelet aggregation inhibitors. 5,703,125, Cl. 514-539.000.
Bowen, Gary S. Auto bib with integral tray portion. 5,701,605, Cl. 2-49.100.
Bowersox, Clarence W., Jr.: *See*—
Pinto, Ivan; Perez, Gerardo; and Bowersox, Clarence W., Jr., 5,703,301, Cl. 73-864.630.
Boyd, Lawrence M.: *See*—
Rabbe, Louis-Marie; Boyd, Lawrence M.; Chevalier, Jean-Louis; and Moreau, Jean-Charles, 5,702,453, Cl. 623-17.000.
Boyle, Ross W.; Dolphin, David; and Johnson, Claire K., to University of British Columbia. Meso-monoiodo-substituted tetramacrocyclic compounds and methods for making and using the same. 5,703,230, Cl. 540-145.000.
Boyles, Alan W.: *See*—
Macku, Charles G.; and Boyles, Alan W., 5,702,201, Cl. 404-75.000.
Boysel, Robert M.: *See*—
Smith, Gregory C.; and Boysel, Robert M., 5,703,728, Cl. 359-871.000.
Bracco Research S.A.: *See*—
Tournier, Hervé; Schneider, Michel; and Guillot, Christian, 5,702,722, Cl. 424-450.000.
Bracken, Peter W.; Brener, Jeffery R.; DiGirolamo, Martin V.; Mullinix, Sam E., Jr.; Stafford, Donald W.; and Wallin, Peter E., to Lexmark International, Inc. Compliant doctor blade. 5,702,812, Cl. 428-323.000.
Brady, Daniel G., to Allergal. Method and apparatus for folding of intraocular lens. 5,702,402, Cl. 606-107.000.
Braendli, Mark. Mixing head for mixing fluids, in particular gases and/or liquids. 5,702,646, Cl. 261-89.000.
Brainard, James R.: *See*—
Smith, Paul H.; Brainard, James R.; Jarvinen, Gordon D.; and Ryan, Robert R., 5,702,683, Cl. 424-9.361.
BrainLAB Med. Computersysteme GmbB: *See*—
Vilsmeier, Stefan; Lippstreu, Stefan; and Bertram, Michael, 5,702,406, Cl. 606-130.000.
Braña, Miguel Fernandez; Berlanga, José Maria Castellano; and Romerdahl, Cynthia, to Knoll Aktiengesellschaft. Dihydrodibenzisoquinolinediones. 5,703,089, Cl. 514-284.000.
Brand, Robert D., to Capital Machine Company, Inc. Method and apparatus for retaining a flitch for cutting. 5,701,938, Cl. 144-363.000.
Brandenburg, Karl-Heinz: *See*—
Herre, Jurgen; Seitzer, Dieter; Brandenburg, Karl-Heinz; and Eberlein, Ernst, 5,703,999, Cl. 395-2.120.
Brands Family Illinois Limited Partnership, The: *See*—
Brands, George B., 5,703,165, Cl. 525-189.000.
Brands, George B., to Saynad Corporation; and Brands Family Illinois Limited Partnership, The. Method of achieving superior dispersions of insoluble sulfur and products thereof. 5,703,165, Cl. 525-189.000.
Brandt, Patricia J. A.: *See*—
Eisele, John F.; Mikelsons, Valdis; Lehman, Gaye K.; Wang, Paul J.; and Brandt, Patricia J. A., 5,702,803, Cl. 428-195.000.
Brånemark, Per-Ingvar, to Medevelop AB. Anchoring element for implantation in tissue, for holding prostheses, artificial joint components or the like. 5,702,443, Cl. 623-11.000.
Brånemark, Per-Ingvar, to Medevelop AB. Anchoring element for implantation in tissue, for holding prosthesis, artificial joint components or the like. 5,702,445, Cl. 623-11.000.
Branik, David P.; Roulinson, Daniel A.; and Umin, Gerald L., to Ford Global Technologies, Inc. Exhaust treatment device for motor vehicle. 5,701,737, Cl. 60-299.000.
Branner, Sven: *See*—
Hastrup, Sven; Branner, Sven; Jørgensen, Birthe Ravn; Christensen, Tove; Jørgensen, Birgitte Bojer; Shuster, Jeffrey R.; Madden, Mark; Moyer, Donna L.; and Fuglsang, Claus, 5,702,934, Cl. 435-183.000.
Brännström, Östen Kurt; and Fredin, Stig Bertil Artur, to Atlas Copco Berema Aktiebolag. Tool locking apparatus for machine hammers. 5,702,112, Cl. 279-19.000.
Branton, Robert: *See*—
Brownmiller, Curtis; Bencheck, Mike; Tran, Minh; Branton, Robert; DeMoss, Mark; and Landon, Steve, 5,704,036, Cl. 395-183.190.
Brasile, Lauren; and Clarke, Jolene, to Alliance Pharmaceutical Corp. Method and solution for organ preservation comprising retinal-derived growth factor, cyclodextrin, mucopolysaccharide and fluorocarbon. 5,702,881, Cl. 435-1.200.
Braskén, Walter. Uninsulated and insulated concrete building structure production in situ. 5,702,627, Cl. 249-33.000.
Brassai, Zoltan; Schneider, Bjoern; and Premiski, Vladimir, to Ford Global Technologies, Inc. Planet gear carrier arrangement with axial support. 5,702,320, Cl. 475-159.000.
Bratz, Matthias: *See*—
Baumann, Ernst; Rheinheimer, Joachim; Vogelbacher, Uwe Josef; Bratz, Matthias; Theobald, Hans; Gerber, Matthias; Westphalen, Karl-Otto; Walter, Helmut; and Rademacher, Wilhelm, 5,703,017, Cl. 504-227.000.
Braun Aktiengesellschaft: *See*—
Heintke, Hans-Eberhard; and Flesser, Achim, 5,702,403, Cl. 606-133.000.
Ullmann, Roland; and Faulstich, Helmut, 5,701,673, Cl. 30-34.100.
Wonka, Boris; Behrendt, Jürgen; and Imhof, Gerald, 5,701,681, Cl. 34-97.000.
Braziel, Tom E. Apparatus for drilling perforations in well casings. 5,701,958, Cl. 166-298.000.
Breese, John S.: *See*—
Heckerman, David E.; Breese, John S.; Horvitz, Eric; and Chickering, David Maxwell, 5,704,017, Cl. 395-61.000.
Brehm, Claude; Boniort, Jean-Yves; Nouchi, Pascale; and Auge, Jacques, to Alcatel N.V. Monomode optical fiber. 5,703,986, Cl. 385-123.000.
Breipohl, Gerhard: *See*—
Klingler, Otmar; Zoller, Gerhard; Jablonka, Bernd; Just, Melitta; Breipohl, Gerhard; Knolle, Jochen; König, Wolfgang; and Stilz, Hans Ulrich, 5,703,050, Cl. 514-18.000.
Brem, Ernst; Ulrich, Roland; and Stadelmann, Peter Werner, to ABB Management AG. Method of servicing generator in combined cycle power plant. 5,701,731, Cl. 60-39.020.
Bremm, Klaus Dieter: *See*—
Petersen, Uwe; Ruther, Michael; Schenke, Thomas; Bremm, Klaus Dieter; and Endermann, Rainer, 5,703,094, Cl. 514-312.000.
Brener, Jeffery R.: *See*—
Bracken, Peter W.; Brener, Jeffery R.; DiGirolamo, Martin V.; Mullinix, Sam E., Jr.; Stafford, Donald W.; and Wallin, Peter E., 5,702,812, Cl. 428-323.000.
Brenton Engineering Co.: *See*—
Smith, Brenton L., 5,701,726, Cl. 53-544.000.
Bricaud, Hervé Guy; and Valcher, Fabrice, to ITT Corporation. Card receiver case. 5,703,346, Cl. 235-44.100.
Bridger, John Stephen, to Commonwealth Scientific and Industrial Research Organisation. Continuous RBCOD measurement. 5,702,951, Cl. 436-62.000.
Bridges, Karin Hoherchak. Protective drape for hard hats and the like. 5,701,609, Cl. 2-422.000.
Bridgestone Corporation: *See*—
Itoh, Kenji; and Sato, Toru, 5,702,546, Cl. 152-209.00R.
Bridgestone Sports Co., Ltd.: *See*—
Higuchi, Hiroshi; and Yamagishi, Hisashi, 5,702,311, Cl. 473-373.000.
Kumagai, Hiroki; and Fukazawa, Fumio, 5,703,687, Cl. 356-426.000.
Bridgestone/Firestone, Inc.: *See*—
Davis, James A.; Wasitis, William A.; and Barham, William F., 5,703,154, Cl. 524-525.000.
Briechle, George T., to Electronic Retailing Systems International Inc. Subglobal area addressing for electronic price displays. 5,704,049, Cl. 395-326.000.
Briggs, Michael J.: *See*—
Resio, Donald T.; Briggs, Michael J.; Fowler, Jimmy E.; and Markle, Dennis G., 5,702,203, Cl. 405-26.000.
Bright, Lyn E., to B&H Manufacturing Company, Inc. Method and apparatus for applying a tactilely distinguishable marking on an article. 5,702,559, Cl. 156-450.000.
Bright, Timothy L.: *See*—
Hartman, Daniel A.; Bright, Timothy L.; and Shroder, Terry A., 5,702,734, Cl. 425-534.000.
Brill, Donald J. Sharpening guide for snowboards and alpine skis. 5,701,787, Cl. 76-83.000.
Brinker, James P.: *See*—
Racioppi, Stephen G.; and Brinker, James P., 5,702,944, Cl. 435-253.600.
Brinkman, Michael J.; Deacon, David A.G.; and Bischel, William K., to Deacon Research. Method for manipulating optical energy using poled structure. 5,703,710, Cl. 359-283.000.
Bristol-Myers Squibb Company: *See*—
Felsenstein, Kevin; Smith, David W.; Poss, Michael A.; Chaturvedula, Prasad; and Sloan, Charles P., 5,703,129, Cl. 514-613.000.
Gogate, Uday S.; Agharkar, Shreeram N.; and Phusanti, Lawan, 5,703,111, Cl. 514-410.000.
Mattson, Ronald J.; and Catt, John D., 5,703,239, Cl. 546-205.000.
Parab, Prakash, 5,702,711, Cl. 424-401.000.
British Biotech Pharmaceuticals Ltd.: *See*—
Allanson, Nigel Mark; and Davidson, Alan Hornsby, 5,703,059, Cl. 514-53.000.
British Nuclear Fuels plc: *See*—
Ainsworth, Adam Kenneth; Glenville, Reginald Paul; and McLean, Iain Alan, 5,703,377, Cl. 250-559.450.

Brocious, George Dale; Smith, Clifford Wayne; and Snyder, Wayne Carl, to Edge Development, Inc. Berm clearing attachment for road clearing vehicles. 5,701,693, Cl. 37-381.000.
Broderick, James H. Fiber optics Christmas tree. 5,702,170, Cl. 362-32.000.
Brodsky, William Louis; Herard, James Daniel; Macek, Thomas George; Sharp, Timothy Lee; and Shovlowsky, George Joseph, to International Business Machines Corporation. Circuitized structure including flexible circuit with elastomeric member bonded thereto. 5,703,331, Cl. 174-254.000.
Bromine Compounds Ltd.: *See*—
Gelmont, Mark; Bercovici, Joseph; and Oren, Jakob, 5,703,274, Cl. 562-475.000.
Brother Kogyo Kabushiki Kaisha: *See*—
Kameyama, Fumio, 5,702,336, Cl. 483-56.000.
Morita, Tetsuo, 5,701,831, Cl. 112-103.000.
Muto, Yukiyoshi, 5,701,830, Cl. 112-102.500.
Omura, Kazuhiko; Iguchi, Masayoshi; Yoshiyama, Masatoshi; and Nishikawa, Hiroshi, 5,703,996, Cl. 386-68.000.
Broucke, Jacques; and DeMilly, Francois, to Valdunes. Polyblock railway wheel. 5,702,141, Cl. 295-7.000.
Brown, Alexander M.; and Klier, Eric M. Machinable metal-matrix composite. 5,702,542, Cl. 148-406.000.
Brown, David; von der Lippe, Paul; and von der Lippe, Susan, to Colorado Time Systems Inc. Slip resistant texture for wet skin contact surfaces. 5,702,799, Cl. 428-143.000.
Brown, Dennis. Inflatable swimmer's safety belt, life preserver/life vest. 5,702,279, Cl. 441-108.000.
Brown, Gene W.; and Rogers, Jeffrey E. D., to Baldwin Filters, Inc. Filter system with environmentally friendly filter cartridge. 5,702,602, Cl. 210-312.000.
Brown, Gregory S.; Quach, Frank; and Silva, Jose, to Trompeter Electronics, Inc. Connector assembly. 5,702,262, Cl. 439-188.000.
Brown, Kyle; Van Noy, Stephen J.; Woo, Yi-Ren; and Jensen, Lars D., to Alcon Laboratories, Inc. Intraocular lens folder. 5,702,400, Cl. 606-107.000.
Brown, Larry Thomas: *See*—
Richardson, Alan David; Early, Paul Timothy; Brown, Larry Thomas; Ortmann, Walter Joseph; and Bos, Edward Albert, 5,701,869, Cl. 123-497.000.
Brown, Terry S.; and Holland, Robert E. Oil filter cover. 5,702,599, Cl. 210-248.000.
Brownmiller, Curtis; Bencheck, Mike; Tran, Minh; Branton, Robert; DeMoss, Mark; and Landon, Steve, to MCI Communications Corporation. System and method for reported trouble isolation. 5,704,036, Cl. 395-183.190.
Bruce, Richard H.: *See*—
Martin, Russel A.; Bruce, Richard H.; DaCosta, Victor M.; Fiske, Thomas G.; Lewis, Alan G.; Silverstein, Louis D.; Steemers, Hugo L.; Thompson, Malcolm J.; and Turner, William D., 5,703,621, Cl. 345-147.000.
Brucker, George J.: *See*—
Kronenberg, Stanley; and Brucker, George J., 5,703,370, Cl. 250-376.000.
Brucker, Steven: *See*—
Giles, Joseph M.; Bennington, William; and Brucker, Steven, 5,702,015, Cl. 215-232.000.
Bruederle, Ernst, to Daimler-Benz Aerospace AG. Method and apparatus for determining the angular momentum vector of a satellite. 5,702,067, Cl. 244-170.000.
Brugge, Hunter Barham, to VLSI Technology, Inc. Integrated-circuit via formation using gradient photolithography. 5,702,870, Cl. 430-314.000.
Brüggen, Josef: *See*—
Odink, Karel Gerrit; Clerc, Roger; Cerletti, Nico; Brüggen, Josef; Tarcsay, Lajos; Sorg, Clemens; and Wiesendanger, Walter, 5,702,920, Cl. 435-69.500.
Brugger, Klaus. Hydraulic system for hydraulically actuating an ambulance lifting table. 5,701,618, Cl. 5-611.000.
Brun, Michel: *See*—
Paidassi, Serge; Ernoult, Jacques; Brun, Michel; Monge-Cadet, Pierre; Pauleau, Yves; and Farges, Guy, 5,702,829, Cl. 428-610.000.
Brunck, Terence Kevin: *See*—
Semple, Joseph Edward; Ardecky, Robert John; Nutt, Ruth Foelsche; Ripka, William Charles; Rowley, David C.; Lim-Wilby, Marguerita S. L.; and Brunck, Terence Kevin, 5,703,208, Cl. 530-331.000.
Brunelli, Thad; Garrison, Gina; and Van Buren, Wade, to Micron Technology, Inc. Apparatus and method for loading and unloading substrates to a chemical-mechanical planarization machine. 5,702,292, Cl. 451-41.000.
Brunner, Heinrich, to Siemens Aktiengesellschaft. MOS semiconductor component having improved transmission properties. 5,703,384, Cl. 257-139.000.
Brunner, Martin: *See*—
Rotzinger, Bruno; Schmutz, Thomas; Brunner, Martin; and Stauffer, Werner, 5,703,149, Cl. 524-116.000.
Brunner, Michael Scott: *See*—
Glaug, Frank Steven; Brunner, Michael Scott; Cochrane, Faith Eileen; Durrance, Debra Hartley; Olson, Christopher Peter; Schleinz, Robert Joseph; and Thiessen, Richard Harry, 5,702,376, Cl. 604-361.000.
Bruno, Adrien: *See*—
Ghirardi, Frédéric; Mersali, Boumédienne; Bruno, Adrien; and Giraudet, Louis, 5,703,895, Cl. 372-50.000.
Brunsman, Michael August: *See*—
Zyngier, Alexandre; Wiegand, Benjamin Carl; Figueroa, Alejandro; and Brunsman, Michael August, 5,703,025, Cl. 510-147.000.
Bryant, Frank R.: *See*—
Chan, Tsiu C.; Bryant, Frank R.; and Nguyen, Loi N., 5,702,979, Cl. 437-187.000.
Bryce, Nathan K.; and Kesterson, Russell R. Personality testing apparatus and method. 5,702,253, Cl. 434-236.000.
Brzezinski, Ted A.: *See*—
Meli, Vincent A.; Matharani, Michael A.; Brzezinski, Ted A.; Shaft, David L.; and Urmanski, James L., 5,701,724, Cl. 53-451.000.
BTR Antivibration Systems, Inc.: *See*—
McLelland, Douglas M.; Wolfe, Paul T.; and Hein, Richard D., 5,702,094, Cl. 267-140.120.
Bucala, Richard J., to Rockefeller University, The. Antibodies to in vivo advanced glycosylation endproducts. 5,702,704, Cl. 424-137.100.
Bucher, William Alexander: *See*—
Blanchard, Scott David; Kallman, Kurt Albert; and Bucher, William Alexander, 5,703,903, Cl. 375-232.000.
Buchhop, Thomas Robert; D'Alleva, Randall; Darnell, Ronald Keith; Little, Jack Ryan; and Pedersen, Curtis Thomas, to ANR Pipeline Company. Parametric emissions monitoring system having operating condition deviation feedback. 5,703,777, Cl. 364-431.062.
Buck, David A. Back-up power tongs. 5,702,139, Cl. 294-88.000.
Buck, James R. Pallet with multiple vises. 5,702,096, Cl. 269-43.000.
Buck, Keith Evan; Farrar, David John; Harvey, Robert Joseph; Litwak, Philip; and Rueff, John Robert, to Thoratec Laboratories Corporation. Step-down skeletal muscle energy conversion system. 5,701,919, Cl. 128-898.000.
Buckberg, Gerald D.: *See*—
Witherspoon, Leland; Buckberg, Gerald D.; and Akopian, Paul, 5,702,358, Cl. 604-4.000.
Buckman Laboratories International Inc.: *See*—
Puckett, Wallace E.; Zollinger, Mark L.; and Corral, Fernando Del, 5,703,131, Cl. 514-642.000.
Buczek, Harthmuth: *See*—
Bidiville, Marc; Raeber, Eric; Arreguit, Javier; Buczek, Harthmuth; Van Shaik, Floris A.; Bauduin, François; and O'Keeffe, Denis, 5,703,356, Cl. 250-221.000.
Buddrus, David J.: *See*—
Schulz, Anthony A.; and Buddrus, David J., 5,702,709, Cl. 424-401.000.
Buechel, Frederick F.; and Pappas, Michael J. Prosthesis with biologically inert wear resistant surface. 5,702,448, Cl. 623-16.000.
Buechel, Frederick F.: *See*—
Pappas, Michael J.; and Buechel, Frederick F., 5,702,461, Cl. 623-20.000.
Pappas, Michael J.; and Buechel, Frederick F., 5,702,466, Cl. 623-20.000.
Buffet, Jean Claude; and Raut, Lionel, to Eaton Corporation. Electrical safety switch. 5,703,552, Cl. 335-205.000.
Building Technologies, Inc.: *See*—
Masters, William Cecil; and Kalker, William J., Jr., 5,701,715, Cl. 52-698.000.
Bukrinsky, Michael I.; Cerami, Anthony; and Ulrich, Peter, to Picower Institute for Medical Research, The. Compounds and methods of use to derivatize neighboring lysine residues in proteins under physiological conditions. 5,703,086, Cl. 514-275.000.
Bullock, Norma Kathryn; and Fent, Douglas G., to Lucent Technologies Inc. Battery protection circuitry for limiting charging parameters of a battery plant. 5,703,471, Cl. 320-51.000.
Bulovic, Vladimir: *See*—
Forrest, Stephen R.; Thompson, Mark E.; Burrows, Paul E.; Bulovic, Vladimir; and Gu, Gong, 5,703,436, Cl. 313-506.000.
Bundy Corporation: *See*—
Kujawski, Rick A., 5,703,330, Cl. 174-72.00A.
Bunnell, Charles A.; Hotten, Terrence Michael; Larsen, Samuel D.; and Tupper, David Edward, to Eli Lilly and Company. Process and solvate of 2-methyl-thieno-benzodiazepine. 5,703,232, Cl. 540-557.000.
Burdick, Brent A.: *See*—
Nikolaychik, Victor V.; Burdick, Brent A.; and Nikolaychik, Leonid V., 5,702,715, Cl. 424-402.000.
Burke, Dennis W.; Kumar, G. Kris; and Kitch, Steven C. Collared prosthetic device with centering fins. 5,702,485, Cl. 623-23.000.
Burke, James A.; Garst, Michael E.; and Wheeler, Larry A., to Allergan. Methods for using (2-imidazolin-2-ylamino) quinoxaline derivatives. 5,703,077, Cl. 514-249.000.
Burke, William Andrew: *See*—
Gronbeck, Dana A.; O'Connell, Kathleen M.; Burke, William Andrew; Gaudet, Michael N.; and Caporale, Stefan J., 5,702,611, Cl. 210-686.000.
Burkinshaw, Brian D., to Sulzer Orthopedics Inc. Patella prosthesis having rotational and translational freedom. 5,702,465, Cl. 623-20.000.
Burnett, Robert W., to Hughes Electronics. Integrated control and data message network. 5,703,875, Cl. 370-381.000.
Burnham Institute, The: *See*—
Reed, John C.; and Sato, Takaaki, 5,702,897, Cl. 435-6.000.
Burns, Carmen D., to Staktek Corporation. Hermetically sealed ceramic integrated circuit heat dissipating package fabrication method. 5,702,985, Cl. 437-217.000.
Burr-Brown Corporation: *See*—
Kalthoff, Timothy V.; Wang, Binan; and Wu, Miaochen, 5,703,589, Cl. 341-172.000.

Burrell, Dennis A.; Davis, James Talmage, II; and Flores, Mauricio, to Motorola, Inc. Microstrip antenna with a parasitically coupled ground plane. 5,703,600, Cl. 343-700.0MS.
Burress, Paul J. Carton closure apparatus. 5,702,1[illegible]5, Cl. 292-145.000.
Burrows, Paul E.: *See—*
Forrest, Stephen R.; Thompson, Mark E.; Burrows, Paul E.; Bulovic, Vladimir; and Gu, Gong, 5,703,436, Cl. 31[illegible]-506.000.
Burstein, Albert H.; and Bartel, Donald L., to Ruptured and Crippled Maintaining The Hospital for Special Surgery, New York Society for The. Joint prosthesis. 5,702,458, Cl. 623-20.000.
Burtin, Jean Pierre; Dobrowolski, Flavien; and Thome, Caryl, to Sames S.A. Method and apparatus for generating a high voltage. 5,703,770, Cl. 363-61.000.
Burton, Larry: *See—*
Lee, Adam T.; Wu, Kuang; and Burton, Larry, 5,702,647, Cl. 261-114.500.
Bushko, Dariusz Antoni; Avakian, Kevin Michael; Johnson, Bruce Graham; and Gerver, Michael Jonathan, to SatCon Technology, Corp. Magnetostrictive active strut. 5,703,553, Cl. 335-215.000.
Bushnell, William Jackson, to Lucent Technologies, Inc. Method for determining an optimum point for database queries during call delivery in a telecommunications network. 5,703,939, Cl. 379-113.000.
Busk, Per, to APV Pasilac A/S. Plant for continuously processing cheese mass. 5,701,809, Cl. 99-459.000.
Butner, Steven C.: *See—*
DiChiara, Robert A., Jr.; and Butner, Steven C., 5,702,761, Cl. 427-181.000.
Buzikievich, Steven J. Prism support. 5,701,679, Cl. 33-293.000.
Byon, Sung-Kwang, to Daewoo Electronics Co., Ltd. Vent cap for a lithium battery. 5,702,840, Cl. 429-89.000.
Bytow, Peter: *See—*
Schulze, Eckehart; and Bytow, Peter, 5,701,79[illegible], Cl. 83-277.000.
C J Wildbird Foods Ltd.: *See—*
Whittles, Franklyn Brian, 5,701,842, Cl. 119-[illegible]2.200.
C. R. Bard, Inc.: *See—*
Sylvanowicz, John T.; and Bourne, George W., IV, 5,702,370, Cl. 604-256.000.
Cabell, David W.: *See—*
Huber, Michael T.; Cabell, David W.; Jezek, Robert J., Sr.; and Goulait, David J. K., 5,702,551, Cl. 156-73.100.
Cable, Thomas L.: *See—*
Mazanec, Terry J.; and Cable, Thomas L., 5,70[illegible]2,999, Cl. 501-152.000.
Caeran, Francesco: *See—*
Gonella, Mario; and Caeran, Francesco, 5,702,[illegible]13, Cl. 280-11.200.
Cahalan, Linda: *See—*
Cahalan, Patrick T.; Verhoeven, Michel; Hendriks, Marc; and Cahalan, Linda, 5,702,818, Cl. 428-409.000.
Cahalan, Patrick T.; Verhoeven, Michel; Hendriks, Marc; and Cahalan, Linda, to Medtronic, Inc. Biocompatability of solid surfaces. 5,702,818, Cl. 428-409.000.
Cai, Xiong; Fura, Aberra; and Qian, Changgeng, to Cytomed, Inc. Compounds and methods for the treatment of cardiovascular, inflammatory and immune disorders. 5,703,093, Cl. 514-312.000.
Caignard, Daniel-Henri: *See—*
Durand, Ludovic; Babingui, Jean-Paul; Moulin, Claudie; Robert-Piessard, Sylvie; Le Baut, Guillaume; Scalbert, Elisabeth; Caignard, Daniel-Henri; and Renard, Pierre, 5,703,118, Cl. 514-456.000.
Cairns, James G., Jr.: *See—*
Wood, Christopher; Cairns, James G., Jr.; and Harris, Walter D., 5,702,488, Cl. 623-27.000.
Calgon Corporation: *See—*
Gill, Jasbir S., 5,702,634, Cl. 252-180.000.
Calhoon, Christina M.: *See—*
Maekawa, Kiyoshi; and Calhoon, Christina M., 5,702,686, Cl. 424-49.000.
California Pellet Mill Company: *See—*
Wilhelm, Donald M., 5,701,683, Cl. 34-394.000.
Callahan, Michael J., Jr.; and Ludden, Christopher A., to Crystal Semiconductor. Signal driver circuit for liquid crystal displays. 5,703,617, Cl. 345-98.000.
Callard, Shawn R. Earplugs adapted to eyeglasses and combination thereof. 5,703,670, Cl. 351-123.000.
Callison, Kathleen V.: *See—*
Lewis, Michael E.; Kauer, James C.; Smith, Kevin R.; Callison, Kathleen V.; Baldino, Frank; Neff, Nicola; and Iqbal, Mohamed, 5,703,045, Cl. 514-12.000.
Calmar Inc.: *See—*
Dobbs, Douglas B.; and Wanbaugh, Linn, 5,70[illegible]2,058, Cl. 239-343.000.
Calsonic Kohwa Co., Ltd.: *See—*
Yamamoto, Shuko; Osakada, Takeya; and Tsuji, Iwao, 5,703,561, Cl. 338-53.000.
Calundann, Gordon: *See—*
Henze, Andree; and Calundann, Gordon, 5,703,[illegible]199, Cl. 528-329.100.
Cameron, Don F.: *See—*
Sanberg, Paul R.; Cameron, Don F.; and Borlongan, Cesario V., 5,702,700, Cl. 424-93.100.
Cameron, Kimberly O.; Dasilva-Jardine, Paul A.; and Rosati, Robert L., to Pfizer Inc. Bone deposition by certain prostaglandin agonists. 5,703,108, Cl. 514-382.000.
Campbell, Thomas A.; Schreiber, Heinz H.; and Yloves, Niki, to Northrop Grumman Corporation. Adaptive DPCA subsystem. 5,703,593, Cl. 342-96.000.
Canestaro, Michael James, to International Business Machines Corporation. Precision fluid head transport. 5,701,654, Cl. 29-434.000.
Cannon, Gregory Lewis: *See—*
Cannon, Nancy Mondrosch; Cannon, Gregory Lewis; and Kilp, David Patrick, 5,703,571, Cl. 340-825.440.
Cannon, Nancy Mondrosch; Cannon, Gregory Lewis; and Kilp, David Patrick, to Motorola, Inc. Selective call transceiver with customized canned messages. 5,703,571, Cl. 340-825.440.
Cannondale Corporation: *See—*
Farris, Mark S.; Harrison, Michael A.; Loftus, John M.; Taylor, Aaron K.; Mack, Christoph E.; and Collins, Ross P., 5,702,092, Cl. 267-64.150.
Canon Kabushiki Kaisha: *See—*
Akiyama, Yuji; Morimura, Kazuhiko; Matsumoto, Masashi; Sugama, Sadayuki; Kamada, Masashi; and Ninomiya, Takayuki, 5,704,019, Cl. 395-101.000.
Arashima, Teruo; Kimura, Makiko; Kashino, Toshio; Sugitani, Hiroshi; Hattori, Yoshifumi; Ikeda, Masami; Saito, Asao; Masuda, Kazuaki; Saito, Akio; and Orikasa, Tsuyoshi, 5,703,632, Cl. 347-47.000.
Higuma, Masahiko; Ikeda, Masami; Asai, Naohito; Abe, Tsutomu; Kashino, Toshio; Ohshima, Noriyoshi; Okazaki, Takeshi; Sugimoto, Hitoshi; and Tajima, Hiroki, 5,701,995, Cl. 206-205.000.
Hiroki, Tomoyuki, 5,703,841, Cl. 369-13.000.
Ikeda, Yoshinori; Ichikawa, Hiroyuki; Kurita, Mitsuru; Hayashi, Kimiyoshi; Honma, Toshio; and Horie, Yoshiko, 5,703,694, Cl. 358-296.000.
Ishii, Kazuyoshi, 5,703,839, Cl. 369-13.000.
Kakizaki, Masaaki; Hirano, Hirofumi; and Bekki, Toshihiko, 5,702,191, Cl. 400-582.000.
Kamata, Shigeto; and Sakai, Toshikazu, 5,703,420, Cl. 310-54.000.
Kawakami, Soichiro; and Kobayashi, Naoya, 5,702,845, Cl. 429-224.000.
Mizutani, Natsuhiko, 5,703,899, Cl. 372-96.000.
Mouri, Akihiro; Toyono, Tsutomu; Kaneko, Shuzo; Inaba, Yutaka; and Kanbe, Junichiro, 5,703,614, Cl. 345-97.000.
Murakami, Keiichi; Inamoto, Tadayoshi; Komuro, Hirokazu; Mashio, Hideaki; and Suzuki, Toshio, 5,703,630, Cl. 347-45.000.
Niki, Toru; Kugai, Nasami; and Nakatsuka, Tadanori, 5,703,962, Cl. 382-173.000.
Ohta, Seiya; Kaneda, Kitahiro; Takei, Hirofumi; and Tanaka, Taeko, 5,703,638, Cl. 348-220.000.
Saika, Toshihiro; Mizutani, Hidemasa; Kaifu, Noriyuki; and Kameshima, Toshio, 5,703,666, Cl. 349-61.000.
Sakai, Masanori; Kadowaki, Toshihiro; Arakawa, Naoto; and Ohnishi, Tetsuya, 5,703,696, Cl. 358-404.000.
Shikakura, Akihiro, 5,703,648, Cl. 348-405.000.
Takaoka, Makoto, 5,703,967, Cl. 382-239.000.
Tonegawa, Nobuyuki, 5,703,842, Cl. 369-32.000.
Tsuchida, Shinji; Takashima, Shoichi; and Izumi, Michihiro, 5,703,936, Cl. 379-88.000.
Yoshida, Takehiro; and Tsuda, Shin, 5,703,698, Cl. 358-435.000.
Cantor, Stephen E.; and Levine, Leon, to Dymax Corporation. Oxygen-curable coating composition. 5,703,138, Cl. 522-29.000.
Capello, William N.; and Dong, Nicholas N. G., to Osteonics Corp. Acetabular shell with supplemental support and method. 5,702,477, Cl. 623-22.000.
Capital Machine Company, Inc.: *See—*
Brand, Robert D., 5,701,938, Cl. 144-363.000.
Caplan, Drew: *See—*
Lucas, Gary L.; Keller, Kathleen E.; Agatston, David; and Caplan, Drew, 5,703,938, Cl. 375-112.000.
Capocelli, Piero: *See—*
Baroni, Andrea; Mastrodomenico, Giovanni; Taliercio, Michele; Capocelli, Piero; Carro, Luigi; and Varambally, Rajamohan, 5,703,821, Cl. 315-210.000.
Caporale, Stefan J.: *See—*
Gronbeck, Dana A.; O'Connell, Kathleen M.; Burke, William Andrew; Gaudet, Michael N.; and Caporale, Stefan J., 5,702,611, Cl. 210-680.000.
Caprari, Fausto, to Actinic Systems, Inc. Telecentric NUV-DUV irradiator for out-of-contact exposure of large substrates. 5,703,374, Cl. 250-492.200.
Caputo, Michael P., Jr.: *See—*
Simmons, Scott C.; Pohl, John R.; Guess, Terrell M.; Rushing, Douglas A.; Caputo, Michael P., Jr.; and Billica, Roger D., 5,701,904, Cl. 128-670.000.
Car Recycling Systems "CRS" B.V.: *See—*
Van Den Mosselaar, Franciscus Laurentius Maria Theresia; Termaten, Gerrit Johannus; and Reuser, Leonardus Theodorus Maria, 5,701,812, Cl. 100-91.000.
Caravajal, Gregory Stephen; and Marshall, Janet Layne, to Procter & Gamble Company, The. Monomeric rich silicate system in automatic dishwashing composition with improved glass etching. 5,703,027, Cl. 510-232.000.
Carl Walther GmbH: *See—*
Wesp, Horst; and Dallhammer, Peter, 5,701,698, Cl. 42-69.020.
Carl-Zeiss-Stiftung: *See—*
Vry, Uwe; Sager, Ottmar; Strähle, Fritz; and Poxleitner, Martin, 5,702,350, Cl. 600-166.000.
Carleton, Finis E.; and Holtrop, Joe W., to Corona Energy Partners, Ltd. Exhaust stack sensor probe. 5,703,299, Cl. 73-863.830.

Carlhoff, Christoph; Jogwich, Martin; Lorenzen, Claus-Jürgen; and Nahmias, Marco, to Pirelli Coordinamento Pneumatici S.p.A. Process for tire manufacture with on-line determining of carbon black concentration and distribution in rubber compounds and other carbon black containing materials. 5,702,550, Cl. 156-64.000.
Carlin, Barry W.: *See—*
Dapper, Mark J.; Carlin, Barry W.; and Geile, Michael J., 5,703,954, Cl. 381-15.000.
Carls, Thomas A.; Melkent, Tony; Whiteside, Leo A.; and Vendrely, Tim, to Smith & Nephew, Inc. Revision femoral trial prosthesis. 5,702,460, Cl. 623-20.000.
Carls, Thomas A.: *See—*
Lackey, Jennifer J.; Pothier, Albert J.; Carls, Thomas A.; Johnson, Chris E.; and Elliott, Scott, 5,702,464, Cl. 623-20.000.
Carlson, Gary D.; and Minot, Mark, to Baxter International Inc. System and method for monitoring and controlling the temperature of a catheter-mounted heater. 5,701,908, Cl. 128-713.000.
Carlson, William C.; Hartle, Jeffrey E.; Salatas, Kathy; Harris, Amy; and Littke, Willis R., to Weyerhaeuser Company. Manufactured seed with enhanced pre-emergence survivability. 5,701,699, Cl. 47-57.600.
Carlsson, Lars: *See—*
Albrektsson, Björn; Carlsson, Lars; Jacobsson, Magnus; Röstlund, Tord; and Wennberg, Stig, 5,702,473, Cl. 623-22.000.
Carnahan, Caroline: *See—*
Carnahan, Garnett; and Carnahan, Caroline, 5,702,084, Cl. 248-416.000.
Carnahan, Garnett; and Carnahan, Caroline. Hi tec swivel and slide. 5,702,084, Cl. 248-416.000.
Carpenter, Robert H.: *See—*
McAnalley, Bill H.; Carpenter, Robert H.; and McDaniel, Harley R., 5,703,060, Cl. 514-54.000.
Carr, Jan E.: *See—*
Arts, Gene H.; Carr, Jan E.; Kuk-Nagle, Karen T.; Lontine, Michael D.; and Millberg, Brian A., 5,702,387, Cl. 606-45.000.
Carralero, Cesar: *See—*
Fang, Yi; Carralero, Cesar; and McEwen, Mark, 5,703,909, Cl. 375-295.000.
Carratt, Michel; and de Vecchis, Michel, to Alcatel Cable. Optical fiber cable with plural modular bundles of hermetically sealed optical fibers inside an outer cable sheath. 5,703,984, Cl. 385-106.000.
Carrington Laboratories Inc.: *See—*
McAnalley, Bill H.; Carpenter, Robert H.; and McDaniel, Harley R., 5,703,060, Cl. 514-54.000.
Carro, Luigi: *See—*
Baroni, Andrea; Mastrodomenico, Giovanni; Taliercio, Michele; Capocelli, Piero; Carro, Luigi; and Varambally, Rajamohan, 5,703,821, Cl. 315-210.000.
Carroll, Francis Alfred, to Carroll Products and Designs Limited. Thin flat panel construction. 5,702,011, Cl. 211-135.000.
Carroll, George: *See—*
Suchowski, Bernard; and Carroll, George, 5,701,849, Cl. 119-865.000.
Carroll Products and Designs Limited: *See—*
Carroll, Francis Alfred, 5,702,011, Cl. 211-135.000.
Carruth, W. Layne, to Hill Rom Company, Inc. Method of cleaning a patient support device for care, maintenance, and treatment of the patient. 5,702,536, Cl. 134-10.000.
Carson, Dennis A.: *See—*
Felgner, Philip L.; Wolff, Jon Asher; Rhodes, Gary H.; Malone, Robert Wallace; and Carson, Dennis A., 5,703,055, Cl. 514-44.000.
Carson, Douglas Timothy: *See—*
Nabity, Frederick Alan; Wright, Paul George; Hulinsky, Raymond; and Carson, Douglas Timothy, 5,701,646, Cl. 29-25.350.
Carter, E. Russell, to Power Tool Holders Incorporated. Chuck having formed jaws. 5,701,779, Cl. 72-356.000.
Carter Holt Harvey Limited: *See—*
Bonner, Craig Ronald, 5,702,052, Cl. 229-4.500.
Carter, James R. Self-erecting traffic control device. 5,703,577, Cl. 340-908.000.
Casebolt, Matthew Phillip, to Metricom, Inc. Portable RF antenna. 5,703,602, Cl. 343-702.000.
Casica, Peter D.; and Chon, James Y., to Alcon Laboratories, Inc. Surgical handpiece holder. 5,702,270, Cl. 439-528.000.
Casio Computer Co., Ltd.: *See—*
Kawasugi, Kazuhiro, 5,703,616, Cl. 345-98.000.
Casnati, Alessandro: *See—*
Ohnishi, Yoshitake; Fujita, Jun-Ichi; Arduini, Arturo; Casnati, Alessandro; Pochini, Andrea; and Ungaro, Rocco, 5,702,620, Cl. 216-49.000.
Caspers, Patrick: *See—*
Bannwarth, Wilhelm; Caspers, Patrick; Le Grice, Stuart; and Mous, Jan, 5,702,918, Cl. 435-69.300.
Cassidy, Michael J.: *See—*
Martell, Charles R.; Cassidy, Michael J.; Ramsey, Anita K.; Liu, Zih-Fang; Ting, Chou Ling; and McKellar, H. Anderson, 5,703,781, Cl. 364-470.060.
Cassiers, Raphael Paul Claude: *See—*
Durvaux, Marc Marie Ghislain; and Cassiers, Raphael Paul Claude, 5,703,910, Cl. 375-322.000.
Catallo, Frank. Spreader for tubular knit fabrics. 5,701,641, Cl. 26-80.000.
Catepillar Inc.: *See—*
Gardner, Cynthia M.; Stone, Robert E.; Duffy, John D.; Allen, William E.; and Schimpf, James E., 5,701,793, Cl. 91-361.000.
Caterpillar Inc.: *See—*
Allott, Mark T.; Billimack, James J.; and Moritz, Timothy C., 5,702,660, Cl. 264-242.000.
Cemenska, Richard A.; Coleman, Gerald N.; and Sibley, James E., 5,701,863, Cl. 123-198.00D.
Coleman, Gerald N., 5,701,924, Cl. 137-3.000.
Doan, Tien D., 5,703,446, Cl. 318-119.000.
Gottshall, Paul C.; and Young, Paul M., 5,701,870, Cl. 123-490.000.
Lunzman, Stephen V., 5,701,933, Cl. 137-596.120.
Pond, Dennis C., 5,702,667, Cl. 266-249.000.
Spangler, John M., 5,702,516, Cl. 106-287.350.
Catt, John D.: *See—*
Mattson, Ronald J.; and Catt, John D., 5,703,239, Cl. 546-205.000.
Caudal, Pierre; Mahe, Guy; Baker, Georgia Anna; and Duis, James Joseph, to Schweitzer-Mauduit International, Inc. Method of releasably securing the end of a roll of material. 5,702,555, Cl. 156-247.000.
Caulder, Jerry; Crowley, R. Hugh; Zorner, Paul S.; and Evans, Steven L., to Mycogen Corporation. Process and composition for controlling weeds. 5,703,011, Cl. 504-130.000.
Caulder, Jerry; Crowley, R. Hugh; Zorner, Paul S.; and Evans, Steven L., to Mycogen Corporation. Process and composition for controlling weeds. 5,703,012, Cl. 504-130.000.
Caulder, Jerry; Crowley, R. Hugh; Zorner, Paul S.; and Evans, Steven L., to Mycogen Corporation. Process and composition for controlling weeds. 5,703,013, Cl. 504-131.000.
Caulder, Jerry; Crowley, R. Hugh; Zorner, Paul S.; and Evans, Steven L., to Mycogen Corporation. Process and composition for controlling weeds. 5,703,014, Cl. 504-142.000.
Causton, Brian Edward; and Alexion, Michael, to Gillette Company, The. Correction and marking materials. 5,702,513, Cl. 106-31.930.
Cauwet, Danièle: *See—*
Dubief, Claude; and Cauwet, Danièle, 5,702,690, Cl. 424-70.100.
Cavallotti, Claudio; Nucida, Gilberto; and Troglia, Claudio, to Ausimont, S.p.A. Preparation of solutions of imido-alkancarboxylic acids suitable for peroxidation processes. 5,703,242, Cl. 548-473.000.
Cavallotti, Claudio; Nucida, Gilberto; and Troglia, Claudio, to Ausimont, S.p.A. Process for reducing water and polar impurities in imido-alkanpercarboxylic acids. 5,703,245, Cl. 548-473.000.
Cecys, Mark L., to Apple Computer, Inc. Utilization of multiple voice sources in a speech synthesizer. 5,704,007, Cl. 395-2.690.
Cedarapids, Inc.: *See—*
Macku, Charles G.; and Boyles, Alan W., 5,702,201, Cl. 404-75.000.
Cedars-Sinai Medical Center: *See—*
Popov, Alexander; and Barath, Peter, 5,702,412, Cl. 606-159.000.
Shehada, Ramez E.; and Grundfest, Warren S., 5,701,900, Cl. 128-862.030.
Vari, Sandor G.; and Maarek, Jean-Michel I., 5,701,902, Cl. 128-[illegible].
Celeste, Anthony J.; and Wozney, John M., to Genetics Institute, Inc. Bone morphogenetic protein-10 (BMP-10) compositions. 5,703,043, Cl. 514-12.000.
Celgene Corporation: *See—*
Muller, George W.; Shire, Mary; and Stirling, David I., 5,703,098, Cl. 514-339.000.
Cemenska, Richard A.; Coleman, Gerald N.; and Sibley, James E., to Caterpillar Inc. Aqueous fuel emulsion identification system and anti-tampering device for an internal combustion engine. 5,701,863, Cl. 123-198.00D.
Central Glass Company, Limited: *See—*
Yamate, Takashi, 5,703,703, Cl. 359-1.000.
Centre International de Recherches Dermatologiques Galderma: *See—*
Charpentier, Bruno; Vion, Michèle; Bernard, Bruno; and Maignan, Jean, 5,702,710, Cl. 424-401.000.
Cephalon, Inc.: *See—*
Lewis, Michael E.; Kauer, James C.; Smith, Kevin R.; Callison, Kathleen V.; Baldino, Frank; Neff, Nicola; and Iqbal, Mohamed, 5,703,045, Cl. 514-12.000.
Cerami, Anthony: *See—*
Bukrinsky, Michael I.; Cerami, Anthony; and Ulrich, Peter, 5,703,086, Cl. 514-275.000.
Wolpe, Stephen D.; Cerami, Anthony; and Sherry, Barbara, 5,703,206, Cl. 530-324.000.
Cerletti, Nico: *See—*
Odink, Karel Gerrit; Clerc, Roger; Cerletti, Nico; Brüggen, Josef; Tarcsay, Lajos; Sorg, Clemens; and Wiesendanger, Walter, 5,702,920, Cl. 435-69.500.
Cerqua, Claudio Christian. Changeable articles of jewelry and method of using them. 5,701,765, Cl. 63-15.400.
Cesano, Alessandra: *See—*
Santoli, Daniela; Rovera, Giovanni; and Cesano, Alessandra, 5,702,702, Cl. 424-93.710.
Ceshkovsky, Ludwig, to Discovision Associates. Technique for closed loop servo operation in optical disc tracking control. 5,703,847, Cl. 369-44.280.
Cetus Corporation: *See—*
Hanisch, Wolfgang H.; and Fernandes, Peter, 5,702,699, Cl. 424-85.600.
CH2M Hill, Inc.: *See—*
Stecker, Philip P.; and Liethen, Christine M., 5,701,953, Cl. 166-75.130.
Cha, Hang-Byong, to Mando Machinery Corp. Brake booster provided with a noise shielding member. 5,701,794, Cl. 91-376.00R.
Cha, Younsik; Choi, Young Kweon; and Bae, You Han, to Macromed, Inc. Thermosensitive biodegradable polymers based on poly(ether-ester)block copolymers. 5,702,717, Cl. 424-425.000.

Chadha, Navjot: *See—*
Merrill, Sonya; Ayer, Atul Devdatt; Chadha, Navjot; and Kuczynski, Anthony L., 5,702,725, Cl. 424-472.000.
Challande, Christian; Desarmaux, Pierre; and Thomas, Pascal, to Salomon S.A. Boot and retention element assembly adapted for skiing. 5,702,119, Cl. 280-625.000.
Chamness, Thomas W., to Schering-Plough HealthCare Products, Inc. Compositions for treating corns, calluses and warts. 5,702,694, Cl. 424-78.030.
Champaigne, Jack M., to Electronics, Incorporated. Anti-gravity blast cleaning. 5,702,289, Cl. 451-38.000.
Champion, Mark R., to Majestic Products Company, The. Fireplace with ceramic fiber duct. 5,701,882, Cl. 126-523.000.
Chan, Tsiu C.; Bryant, Frank R.; and Nguyen, Loi N., to SGS-Thomson Microelectronics, Inc. Method of forming a landing pad structure in an integrated circuit. 5,702,979, Cl. 437-187.000.
Chandler, Bruce D.: *See—*
Mahone, William C.; Chandler, Bruce D.; Killeen, Joseph P.; and Garrett, David L., 5,702,205, Cl. 405-169.000.
Chandler, Philip Bonn: *See—*
Rettker, James Palmer; Peterson, William Edward; Chandler, Philip Bonn; and Lee, John Howard, 5,702,802, Cl. 428-192.000.
Chandra, Tushar Deepak: *See—*
Badovinatz, Peter Richard; Chandra, Tushar Deepak; Kirby, Orvalle Theodore; and Pershing, John Arthur, Jr., 5,704,032, Cl. 395-182.020.
Chang, Carl: *See—*
Lum, Paul; Chang, Carl; and Zawadzki, Jerry, 5,701,901, Cl. 128-602.000.
Chang, Ning San: *See—*
Hennessey, A. Kathleen; Lin, YouLing; Hastings, Howard V., III; Lovelace, Jerome R.; and Chang, Ning San, 5,703,969, Cl. 382-276.000.
Chang, Su-Fen. Device for thermally testing a temperature control element. 5,702,184, Cl. 374-1.000.
Chang, Thomas: *See—*
Wang, Chih-Hsien; Chen, Min-Liang; and Chang, Thomas, 5,703,388, Cl. 257-315.000.
Chapman, David, to Arris Pharmaceutical Corporation. Three dimensional measurement of molecular diversity. 5,703,792, Cl. 364-496.000.
Chapman, John H.: *See—*
Larson, Carl O., Jr.; Smith, James S.; Chapman, John H.; Slimon, Scot A.; John, Trahan D.; Robert, J. Brozek; Franco, Alberto; McGarvey, John J.; Rosen, Marvin E.; and Pasque, Michael K., 5,702,430, Cl. 607-1.000.
Chapman, John Steven: *See—*
Redlich, George Harvey; Willingham, Gary Lewis; and Chapman, John Steven, 5,703,105, Cl. 514-372.000.
Charbonnel, Jean-Louis; Franchet, Michel; and Naudet, Jacky Serge, to Societe Nationale d'Etude et de Construction de Moteurs d'Aviation "Snecma". Braking nuts or screws and mountings obtained with same devices. 5,702,217, Cl. 411-909.000.
Charles Machine Works, Inc., The: *See—*
Bieberdorf, John W.; Wisehart, John C.; and Draper, Greg W., 5,703,484, Cl. 324-207.220.
Charles Stark Draper Laboratory, Inc., The: *See—*
Ward, Paul A., 5,703,292, Cl. 73-504.020.
Charpentier, Bruno; Vion, Michèle; Bernard, Bruno; and Maignan, Jean, to Centre International de Recherches Dermatologiques Galderma. Dibenzofuran compounds and pharmaceutical/cosmetic compositions comprised thereof. 5,702,710, Cl. 424-401.000.
Charquet, Daniel: *See—*
Mardon, Jean-Paul; Sevenat, Jean; and Charquet, Daniel, 5,702,544, Cl. 148-672.000.
Charron, Duane G.: *See—*
Jovanovich, Alan F.; Warren, Bruce G.; Charron, Duane G.; and Duke, Steven B., 5,703,950, Cl. 380-23.000.
Chartered Semiconductor Manufacturing Pte Ltd: *See—*
Chen, Wei Tony; and Sundaresan, Ravishankar, 5,702,987, Cl. 438-167.000.
Chasalow, Fred I., to Amur Research Corp. Phosphocholine drug derivatives. 5,703,063, Cl. 514-78.000.
Chatterjee, Dilip K.: *See—*
Jarrold, Gregory S.; Chatterjee, Dilip K.; and Ghosh, Syamal K., 5,702,766, Cl. 427-376.100.
Chatterley, Martin Patrick: *See—*
Foster, John; Taylor, Alan; and Chatterley, Martin Patrick, 5,702,574, Cl. 204-224.00R.
Chaturvedula, Prasad: *See—*
Felsenstein, Kevin; Smith, David W.; Poss, Michael A.; Chaturvedula, Prasad; and Sloan, Charles P., 5,703,129, Cl. 514-613.000.
Chaudhary, Ashok Gopal: *See—*
Kingston, David G. I.; Chaudhary, Ashok Gopal; Gharpure, Milind Moreshwar; Rimoldi, John Matthew; and Gunatilaka, A. A. Leslie, 5,703,247, Cl. 548-962.000.
Chek-Med Systems, Inc.: *See—*
Whalen, Robert G., 5,702,911, Cl. 435-12.000.
Chemical Lime Company: *See—*
Schoof, William H., 5,702,247, Cl. 432-103.000.
Chen, Cheng-Der: *See—*
Li, Tze Fen; Pengwu, Chung-Mou; Chen, Cheng-Der; and Sun, Chung-Yu, 5,704,004, Cl. 395-2.520.
Chen, Chih C.: *See—*
Proett, Mark A.; Chin, Wilson C.; and Chen, Chih C., 5,703,286, Cl. 73-152.050.
Chen, Chih-Chieh: *See—*
Shih, Tung-Sheng; Yeh, Wen-Yu; Chen, Chih-Chieh; and Lai, Chane-Yu, 5,702,506, Cl. 95-287.000.
Chen, Chung-Chin: *See—*
Lin, Mao-Chao; and Wang, Jia-Yin, 5,703,911, Cl. 375-341.000.
Chen, Chung-Zen, to Vanguard International Semiconductor Corporation. Method for fabricating a honeycomb shaped capacitor. 5,702,968, Cl. 437-52.000.
Chen, Eugene; and Tehrani, Saied N., to Motorola. Ferromagnetic GMR material. 5,702,831, Cl. 428-611.000.
Chen, Eugene: *See—*
Tehrani, Saied N.; Chen, Eugene; Durlam, Mark; and Zhu, Xiaodong T., 5,703,805, Cl. 365-173.000.
Chen, Fung-jou: *See—*
Kamps, Richard Joseph; Behnke, Janica Sue; Chen, Fung-jou; and Radtke, Darnell Clarence, 5,702,571, Cl. 162-117.000.
Chen, Guei-Rung, to Chih Ching Industry Ltd. Structure of pivot joint. 5,702,197, Cl. 403-166.000.
Chen, He-Jin. Securing device for footwear. 5,701,639, Cl. 24-71.0SK.
Chen, James C.; and Wiscombe, Brent, to Light Sciences Limited Partnership. Intracorporeal light treatment of blood. 5,702,432, Cl. 607-88.000.
Chen, Jenn-Hwang. Movable lamp device. 5,702,175, Cl. 362-191.000.
Chen, Jiong; and Benveniste, Victor M., to Eaton Corporation. Method and apparatus for ion beam neutralization. 5,703,375, Cl. 250-492.210.
Chen, Jone-Jane, to United Microelectronics Corporation. Expandable repeater controller. 5,703,883, Cl. 370-501.000.
Chen, Judy. Reflector road sign with self-provided light means. 5,703,719, Cl. 359-547.000.
Chen, Jue-Jye: *See—*
Ying, Shu-Lan; Huang, Yuan-Chang; Chen, Jue-Jye; and Mii, Yuh-Jier, 5,702,956, Cl. 437-8.000.
Chen, Mei Yun. Cursor positioning device for computer system. 5,704,037, Cl. 345-184.000.
Chen, Ming-Hsiung. Structure of lamp socket. 5,702,267, Cl. 439-419.000.
Chen, Min-Liang: *See—*
Wang, Chih-Hsien; Chen, Min-Liang; and Chang, Thomas, 5,703,388, Cl. 257-315.000.
Chen, Po-quang: *See—*
Wu, Shing-sheng; and Chen, Po-quang, 5,702,392, Cl. 606-61.000.
Chen, Wei Tony; and Sundaresan, Ravishankar, to Chartered Semiconductor Manufacturing Pte Ltd. Method of manufacture of self-aligned JFET. 5,702,987, Cl. 438-187.000.
Chen, William W.; and Harris, Norman H., to Hughes Electronics. Method of making thermal shock resistant sapphire for IR windows and domes. 5,702,654, Cl. 264-82.000.
Chen, Xi; and Yuan, Jun, to Neurogen Corporation. N-aminoalkyl-1-biphenylenyl-2-carboxamides; new dopamine receptor subtype specific ligands. 5,703,083, Cl. 514-255.000.
Chen, Xi; and Wasley, Jan William Francis, to Neurogen Corporation. N-Aminoalkyl-2-anthraquinonecarboxamides; new dopamine receptor subtype specific ligands. 5,703,237, Cl. 544-380.000.
Chen, Xi: *See—*
Yuan, Jun; and Chen, Xi, 5,703,235, Cl. 544-363.000.
Chen, Xiaole, to Exar Corporation. Piece-wise linear approximation of a dB linear programmable gain amplifier. 5,703,524, Cl. 327-560.000.
Chen, Yeh-ming. Mobile phone holder. 5,703,946, Cl. 379-446.000.
Chen, Ying-Ho: *See—*
Jang, Syun-Ming; Chen, Ying-Ho; and Yu, Chen-Hua, 5,702,977, Cl. 437-67.000.
Chen Yn Enterprise Co., Ltd.: *See—*
Lien, Tzung-Min; and Lien, Tzung-Shih, 5,702,268, Cl. 439-419.000.
Chen, Yung-Ming: *See—*
Forrestal, Lloyd; Voorhees, Marc; Chen, Yung-Ming; and Edrich, Richard A., 5,702,823, Cl. 458-450.000.
Chenevich, William: *See—*
Bezy, E. William; and Chenevich, William, 5,703,344, Cl. 235-379.000.
Cheng, Alan Tat Yan; and DeVack, Donald Leonard, to Praxair Technology, Inc. Cryogenic cold shelf. 5,701,745, Cl. 62-51.100.
Cheng, Brian K.: *See—*
Stern, Michael K.; Cheng, Brian K.; Ebner, Jerry R.; and Riley, Dennis P., 5,703,273, Cl. 562-16.000.
Cheng, Jiurong: *See—*
Shei, Darlene; and Cheng, Jiurong, 5,703,788, Cl. 364-488.000.
Cheong, Ngwe: *See—*
Vu, Duy-Pach; Dingle, Brenda; and Cheong, Ngwe, 5,702,963, Cl. 437-41.0GS.
Cherry, Isaac R.; Bachman, John A.; Tanaka, David T.; So, Hangyick; and Henkin, Raphael, to Del Mar Avionics. Modular physiological computer-recorder. 5,701,894, Cl. 128-630.000.
Cherry Semiconductor Corporation: *See—*
Phillips, Timothy A.; and Lindberg, J. Eric, 5,703,473, Cl. 323-282.000.
Chervitz, Alan: *See—*
Goble, E. Marlowe; Luman, David P.; Chervitz, Alan; Story, C. Brad; and Gundlalpalli, Ramarao, 5,702,397, Cl. 606-72.000.
Chevalier, Jean-Louis: *See—*
Rabbe, Louis-Marie; Boyd, Lawrence M.; Chevalier, Jean-Louis; and Moreau, Jean-Charles, 5,702,453, Cl. 623-17.000.
Chevallet, Jacques; and Riquier, Jean-Claude, to Hospal Industrie. Device for preparing a treatment liquid by filtration. 5,702,597, Cl. 210-195.200.

Chiba, Akira: *See—*
Fukao, Tadashi; Chiba, Akira; and Michioka, Chikara, 5,703,423, Cl. 310-90.500.
Chickering, David M.: *See—*
Heckerman, David E.; Geiger, Dan; and Chickering, David M., 5,704,018, Cl. 395-75.000.
Chickering, David Maxwell: *See—*
Heckerman, David E.; Breese, John S.; Horvitz, Eric; and Chickering, David Maxwell, 5,704,017, Cl. 395-61.000.
Chien, Jung-Fu, to Shinih Enterprise Co., Ltd. Method for producing a variable density, corrugated resin-bonded or thermo-bonded fiberfill and the structure produced thereby. 5,702,801, Cl. 428-181.000.
Chien, Rong-Wu; and Li, Hsiu-Lan, to Vanguard International Semiconductor Corporation. Soft ashing method for removing fluorinated photoresists layers from semiconductor substrates. 5,702,869, Cl. 430-313.000.
Chih Ching Industry Ltd.: *See—*
Chen, Guei-Rung, 5,702,197, Cl. 403-166.000.
Chin, Wilson C.: *See—*
Proett, Mark A.; Chin, Wilson C.; and Chen, Chih C., 5,703,286, Cl. 73-152.050.
Chinese Academy of Medical Sciences, Institute of Materia Medica, an Institute of the: *See—*
Han, Rui; and Guo, Zong-Ru, 5,703,130, Cl. 514-616.000.
Chiron Corporation: *See—*
Kolberg, Janice A.; and Urdea, Michael S., 5,702,891, Cl. 435-6.000.
Kriegler, Michael; and Perez, Carl, 5,702,705, Cl. 424-145.100.
Urdea, Michael S.; and Horn, Thomas, 5,702,893, Cl. 435-6.000.
Urdea, Michael S.; and Horn, Thomas, 5,703,218, Cl. 536-23.100.
Zimmerman, Robert; and Marafino, Benedict J., Jr., 5,702,697, Cl. 424-85.100.
Chiron Diagnostics Corporation: *See—*
Foos, Joseph S.; and Benco, John S., 5,702,575, Cl. 204-292.000.
Law, Say-Jong; Jiang, Qingping; Fischer, Walter; Unger, John T.; and Krodel, Elizabeth K., 5,702,887, Cl. 435-6.000.
Sandhu, Gurpreet S.; and Kline, Bruce C., 5,702,889, Cl. 435-6.000.
Chisso Corporation: *See—*
Haseba, Yasuhiro; Miyazawa, Kazutoshi; Matsui, Shuichi; Kondo, Tomoyuki; Goto, Yasuyuki; Nakagawa, Etsuo; and Sawada, Shinichi, 5,702,641, Cl. 252-299.630.
Cho, Chahee Peter; and Krol, William P., Jr., to United States of America, Navy. Marine propulsion system for underwater vehicles. 5,702,273, Cl. 440-6.000.
Cho, In-Su, to Daewood Electronics Co. Ltd. Pulsator for a washing machine. 5,701,767, Cl. 68-134.000.
Cho, Kichul, to United States of America, Navy. Real-time data sorter. 5,704,057, Cl. 395-481.000.
Choi, Cheol-Kyu: *See—*
Kim, Sang-Keun; Kim, Seoung-Ho; Lee, Haeng-Woo; Choi, Cheol-Kyu; Kim, Jeong-Deuk; Hong, Jin-Who; Kim, Chang-Soo; and Whang, Kong-Hyun, 5,703,139, Cl. 522-42.000.
Kim, Sang-Keun; Lee, Haeng-Woo; Choi, Cheol-Kyu; Kim, Jeong-Deuk; Hong, Jin-Who; Kim, Chang-Soo; and Whang, Kong-Hyun, 5,703,142, Cl. 522-90.000.
Choi, Kyeong Keun, to Hyundai Electronics Industries Co., Ltd. Method for fabricating a capacitor of a semiconductor device. 5,702,970, Cl. 437-52.000.
Choi, Kyung-Hwan, to LG Electronics Inc. Encoder key input device for a microwave oven and interrupt processing method using the same. 5,702,625, Cl. 219-702.000.
Choi, Sung-lim; and An, Kwang-jin, to Samsung Display Devices Co., Ltd. Liquid crystal display with low resistance electrode and method therefor. 5,702,871, Cl. 430-314.000.
Choi, Young Kweon: *See—*
Cha, Younsik; Choi, Young Kweon; and Bae, You Han, 5,702,717, Cl. 424-425.000.
Choi, Young Tai; and Huh, Yeung H. Automobile refrigerator. 5,701,754, Cl. 62-244.000.
Choi, Yun-Ho: *See—*
Park, Churoo; Jang, Hyun-Soon; Kim, Chull-Soo; Kim, Myung-Ho; Lee, Seung-Hun; Lee, Si-Yeol; Lee, Ho-Cheol; Kim, Tae-Jin; and Choi, Yun-Ho, 5,703,828, Cl. 365-230.030.
Chon, James Y.: *See—*
Casica, Peter D.; and Chon, James Y., 5,702,270, Cl. 439-528.000.
Choukh, Alexandre M.: *See—*
Kim, In-eung; and Choukh, Alexandre M., 5,703,738, Cl. 360-113.000.
Chow, Bruce H. B.: *See—*
Sun, Andy Kwan-Leung; Chow, Bruce H. B.; and Panziera, Edoardo, 5,702,041, Cl. 224-539.000.
Christen, Richard: *See—*
Mabilat, Claude; and Christen, Richard, 5,703,217, Cl. 536-23.100.
Christensen, Jeffrey Eames: *See—*
Anderson, Michael John; Johnson, Gary Carl; Popovich, Mark Phillip; and Christensen, Jeffrey Eames, 5,702,775, Cl. 428-1.000.
Christensen, Tove: *See—*
Hastrup, Sven; Branner, Sven; Jørgensen, Birthe Ravn; Christensen, Tove; Jørgensen, Birgitte Bojer; Shuster, Jeffrey R.; Madden, Mark; Moyer, Donna L.; and Fuglsang, Claus, 5,702,934, Cl. 435-183.000.
Christian, Willard C.: *See—*
Vaughan, Robert A.; Christian, Willard C.; Zimmer, John P.; and Mistopoulos, James E., 5,702,148, Cl. 296-146.900.
Christie, Joseph Michael. ATM transport system. 5,703,876, Cl. 370-395.000.
Christmann, Norbert Ernst; and Fries, Gerhard, to Tetra Laval Convenience Food GmbH & Co. KG. Stop piece. 5,702,044, Cl. 226-173.000.
Chrysler Corporation: *See—*
Pavur, Carol P.; Harper, Dennis; Bonnell, Steven W.; Norkus, James F.; Hartery, William F.; and Galloway, Lawrence W., 5,702,133, Cl. 292-80.000.
Thomas, Christopher P.; McCombie, Jay C.; Weber, Gregory T.; Ehlers, Jeffery C.; and Soltis, Dennis A., 5,701,865, Cl. 123-339.110.
Chrzan, Rigobert: *See—*
Kiesele, Herbert; Chrzan, Rigobert; and Mett, Frank, 5,702,576, Cl. 204-415.000.
Chu, Daniel T.: *See—*
Li, Qun; Wang, Wei-Bo; Chu, Daniel T.; and Hasvold, Lisa Anne, 5,703,244, Cl. 548-557.000.
Chu, Edwin; and Lai, Hu-Kong, to ACC Microelectronics Corporation. Output mapping of die pad bonds in a ball grid array. 5,703,402, Cl. 257-737.000.
Chu, John B.; Ju, Paul P.; and Wang, Ynjiun P., to Meta Holding Corp. Extended working range dataform reader including fuzzy logic image control circuitry. 5,702,059, Cl. 235-462.000.
Chuang, Strong C.; Kaufman, Kenneth; and Schiesser, Robert H., to Kimberly-Clark Worldwide, Inc. Capillary dewatering method and apparatus. 5,701,682, Cl. 34-115.000.
Chun, Christopher K. Y.; Shook, Stephen G.; and Ryan, Carl R., to Motorola. Feedforward adaptive threshold processing method. 5,703,504, Cl. 327-72.000.
Chun, Christopher K. Y.: *See—*
Shook, Stephen G.; Chun, Christopher K. Y.; and Schwartz, Daniel B., 5,703,506, Cl. 327-87.000.
Chun, Hee: *See—*
Kim, Yong-ho; Lee, Young-sik; and Chun, Hee, 5,703,750, Cl. 361-117.000.
Chung, Gi ju: *See—*
Kim, Su Ung; Kim, Dong Yeon; Chung, Gi ju; Hong, Sung Kol; Park, Sung Jun; Nam, Sang Hoon; and Lee, Yong Suk, 5,703,097, Cl. 514-338.000.
Chung, Hsien-Dar: *See—*
Ming-Tsung, Liu; Hsu, Bill Y. B.; Chung, Hsien-Dar; and Wu, Der-Yuan, 5,703,408, Cl. 257-784.000.
Church & Dwight Co., Inc.: *See—*
Miskewitz, Regina M., 5,702,687, Cl. 424-52.000.
Chwalik, Robert: *See—*
Conville, John J.; Chwalik, Robert; Desai, Shrikant V.; Turcotte, David E.; and Lyon, James T., 5,702,631, Cl. 252-76.000.
Ciba-Geigy Corporation: *See—*
Stahl, Peter Heinrich; and Gamboni, Claudio, 5,702,724, Cl. 424-465.000.
Ciba Specialty Chemicals Corporation: *See—*
Mallah, Mohamad; Linn, Horst; Saner, Niklaus; and Voirol, Peter, 5,703,343, Cl. 219-687.000.
Manser, Aloysius Hubertus; and Francois, Jacques, 5,702,557, Cl. 156-275.700.
Rotzinger, Bruno; Schmutz, Thomas; Brunner, Martin; and Stauffer, Werner, 5,703,149, Cl. 524-116.000.
Cieutat, Denis; and Schmidt, Emmanuel, to L'Air Liquide; and Air Liquide America Corporation. Method for optimizing the temperature of a Claus unit. 5,702,678, Cl. 423-567.100.
Cifaldi, Carmine. High resolution optical communication system. 5,703,636, Cl. 348-14.000.
Circello, Joseph C., to Motorola, Inc. Method and circuit for initializing a data processing system. 5,704,034, Cl. 395-183.140.
Cirrus Logic, Inc.: *See—*
Eglit, Alexander Julian, 5,703,618, Cl. 345-112.000.
Hankinson, Robert J.; and Sponring, Otto, 5,703,660, Cl. 348-638.000.
Wada, Takeo, 5,703,850, Cl. 369-47.000.
Citibank, N.A.: *See—*
Rosen, Sholom S., 5,703,949, Cl. 380-21.000.
Citizen Watch Co., Ltd.: *See—*
Umemoto, Toshio; Fukuda, Masami; Shimoda, Kenji; Kitajima, Yasuo; Kobayashi, Isamu; and Udou, Yurie, 5,703,837, Cl. 368-88.000.
Clairol, Incorporated: *See—*
Wenke, Gottfried; and Prota, Giuseppe, 5,702,712, Cl. 424-401.000.
Claisse, Paul; and Kiely, Philip, to Motorola, Inc. Method of mode detection and control in semiconductor lasers. 5,703,892, Cl. 372-32.000.
Clarion co: *See—*
Hayashi, Hideki; and Teraguchi, Yuji, 5,703,866, Cl. 369-192.000.
Clarion Pharmaceuticals Inc.: *See—*
Nair, Haridasan K., 5,703,062, Cl. 514-77.000.
Clark, Iain R.; and Fiedler, Alan, to LSI Logic Corporation. Digital-to-analog converter having overlapping segments. 5,703,587, Cl. 341-144.000.
Clark, William G.: *See—*
Bella, James; and Clark, William G., 5,703,411, Cl. 307-10.100.
Clarke, Jolene: *See—*
Brasile, Lauren; and Clarke, Jolene, 5,702,881, Cl. 435-1.200.
Clausen, Glenn Allen: *See—*
Tsang, Chih-Hao Mark; Petty, Randall Hughes; Clausen, Glenn Allen; and Schrader, Charles Henry, 5,702,589, Cl. 208-67.000.
Clauze, Jacques: *See—*
Hummer, Jacques; Dive, Michel; Laurençon, Michel; and Clauze, Jacques, 5,702,459, Cl. 623-20.000.

Clayton, Peter J.: *See—*
Hackstie, Louis F.; and Clayton, Peter J., 5,702,186, Cl. 384-117.000.
Clerc, Roger: *See—*
Odink, Karel Gerrit; Clerc, Roger; Cerletti, Nico; Brüggen, Josef; Tarcsay, Lajos; Sorg, Clemens; and Wiesendanger, Walter, 5,702,920, Cl. 435-69.500.
Cleveland, Michael Allen. Toilet seat alarm. 5,703,567, Cl. 340-573.000.
Clifford, Arthur L.; Dong, Dennis F.; Mumby, Timothy A.; and Rogers, Derek J., to Huron Tech Canada, Inc. Chemical and electrochemical regeneration of active carbon. 5,702,587, Cl. 205-760.000.
Cline, Troy Lee; Isensee, Scott Harlan; Poston, Ricky Lee; and Werner, Jon Harald, to International Business Machines Corporation. Method and apparatus for transmitting a voice sample to a voice activated data processing system. 5,704,009, Cl. 395-2.840.
Clinical Diagnostic Systems: *See—*
Cummins, Thomas J.; Atwood, Susan Melissa; Bergmeyer, Lynn; Findlay, John Bruce; Sutherland, John W.H.; and Kerschner, JoAnne H., 5,702,901, Cl. 435-6.000.
Clokie, Cameron Malcolm Lang, to McGill University. Osseointegration promoting implant composition, implant assembly and method therefor. 5,702,695, Cl. 424-78.080.
Clontz, Richard C. Card holder. 5,701,696, Cl. 40-642.020.
Clothier, Michael F.: *See—*
Lee, Byung H.; and Clothier, Michael F., 5,703,078, Cl. 514-250.000.
Cloutier, Richard M.: *See—*
Horsky, Thomas N.; Reynolds, William E.; and Cloutier, Richard M., 5,703,372, Cl. 250-423.00R.
Clupper, Harold E.: *See—*
Repice, Ronald M.; Repice, Ronald M., II; and Clupper, Harold E., 5,702,355, Cl. 602-21.000.
CMI-Equipment & Engineering: *See—*
McKibben, Kenneth D.; Gould, Alan P.; Wuepper, Thomas E.; Minor, Daniel D.; Salgat, Mark T.; Marthaler, David; Speaks, Jackie M.; Macheske, Robert L.; Good, David; Gillette, Richard A.; Bond, Philip L.; Coyle, Donald C.; Rentfrow, Darrell; Stiens, Thomas O.; and Stevens, Larry M., 5,701,945, Cl. 164-130.000.
Coates, Clarence A.: *See—*
Krutak, James J.; Cushman, Michael R.; Coates, Clarence A.; Parham, William W.; Weaver, Max A.; and Patonay, Gabor, 5,703,229, Cl. 540-140.000.
Cobe Laboratories, Inc.: *See—*
Bainbridge, Marlene Adele; and Holmes, Brian M., 5,702,357, Cl. 604-4.000.
Forrestal, Lloyd; Voorhees, Marc; Chen, Yung-Ming; and Edrich, Richard A., 5,702,823, Cl. 458-450.000.
Cocetta, Franco: *See—*
Merlo, Mauro; Cocetta, Franco; Marchió , Fabio; Grasso, Massimo; and Murari, Bruno, 5,703,476, Cl. 323-313.000.
Cochrane, Faith Eileen: *See—*
Glaug, Frank Steven; Brunner, Michael Scott; Cochrane, Faith Eileen; Durrance, Debra Hartley; Olson, Christopher Peter; Schleinz, Robert Joseph; and Thiessen, Richard Harry, 5,702,376, Cl. 604-361.000.
Coggan, David A., to Loral Vought Systems Corporation. Device and method for transversely cutting a band. 5,703,315, Cl. 89-1.140.
Cohen, Robert C.: *See—*
Averill, Robert G.; Cohen, Robert C.; and Zubok, Rafail, 5,702,487, Cl. 623-23.000.
Cohen, Uri; and Hollars, Dennis R., to Velocidata, Inc. Toroidal thin film head. 5,703,740, Cl. 360-126.000.
Cohn, David B.: *See—*
Klaras, Louis F.; and Cohn, David B., 5,703,691, Cl. 356-437.000.
Colby, Gerard Joseph. Absorbent bedsheet. 5,701,617, Cl. 5-484.000.
Colclough, Terence; Skinner, Philip; Woollins, John Derek; and Wood, Paul Thomas, to Exxon Chemical Patents Inc. Process for the preparation of dithiophosphoric acids. 5,703,262, Cl. 558-112.000.
Cole, Daniel D. Modular split sprocket assembly. 5,702,316, Cl. 474-96.000.
Coleman, Gerald N., to Caterpillar Inc. Apparatus and method for detecting and handling liquid separation in liquid emulsions. 5,701,924, Cl. 137-3.000.
Coleman, Gerald N.: *See—*
Cemenska, Richard A.; Coleman, Gerald N.; and Sibley, James E., 5,701,863, Cl. 123-198.00D.
Coles, Carl R.: *See—*
O'Neal, Alan D.; Stone, Michael D.; and Coles, Carl R., 5,702,240, Cl. 418-9.000.
Colgate-Palmolive Co: *See—*
Erilli, Rita; Gallant, Chantal; and Lysy, Regis, 5,703,028, Cl. 510-236.000.
Colgate-Palmolive Company: *See—*
Hardy, Eugene E.; and Psihoules, Anthony, 5,702,692, Cl. 424-70.100.
Colineau, Joseph: *See—*
Audoin, Michel; Moreau, Bertrand; and Colineau, Joseph, 5,703,845, Cl. 369-44.410.
Collier, Leslie Warren, IV; Yahiaoui, Ali; Johns, Eric Mitchell; and Durrance, Debra Hartley, to Kimberly-Clark Worldwide, Inc. Wet liner for child toilet training aid. 5,702,377, Cl. 604-361.000.
Collins, Mark L.; Blomquist, Cecile; Lombardo, Massimo; and Eldredge, John, to Amoco Corporation. Methods for improving the sensitivity of hybridization assays. 5,702,896, Cl. 435-6.000.
Collins, Ross P.: *See—*
Farris, Mark S.; Harrison, Michael A.; Loftus, John M.; Taylor, Aaron K.; Mack, Christoph E.; and Collins, Ross P., 5,702,092, Cl. 267-64.150.
Colombo, David: *See—*
Kreysler, William; Labesque, Serge; Jordan, Kurt; Luzaich, Mark; Colombo, David; Marcus, Edward J.; and Koosa, Richard, 5,701,706, Cl. 52-169.600.
Colorado Seminary: *See—*
Stedman, Donald H.; and Meeks, Patti A., 5,702,954, Cl. 436-103.000.
Colorado Time Systems Inc.: *See—*
Brown, David; von der Lippe, Paul; and von der Lippe, Susan, 5,702,799, Cl. 428-143.000.
Combs, Jeff. Method and apparatus for elimination of adhesive stringers during perfect binding. 5,702,220, Cl. 412-8.000.
Commissariat a l'Energie Atomique: *See—*
Paidassi, Serge; Ernoult, Jacques; Brun, Michel; Monge-Cadet, Pierre; Pauleau, Yves; and Farges, Guy, 5,702,829, Cl. 428-610.000.
Thony, Philippe; Rabarot, Marc; and Molva, Engin, 5,703,890, Cl. 372-12.000.
Commonwealth Scientific and Industrial Research Organisation: *See—*
Bridger, John Stephen, 5,702,951, Cl. 436-62.000.
Compagnie Generale Des Matieres Nucléaires, both of: *See—*
Mardon, Jean-Paul; Sevenat, Jean; and Charquet, Daniel, 5,702,544, Cl. 148-672.000.
Compagnie Generales Des Matieres Nucleaires: *See—*
Foos, Jacques; Guy, Alain; Lemaire, Marc; Leclere, Bruno; Le Buzit, Gérard; and Doutreluingne, Pierre, 5,702,608, Cl. 210-668.000.
Compaq Computer Corporation: *See—*
Hayes, Donald J.; and Cox, W. Royall, 5,703,631, Cl. 347-47.000.
Complex Fluid Systems, Inc.: *See—*
Peterson, William R.; and Stauffer, Craig M., 5,702,767, Cl. 427-407.100.
Conax Florida Corporation: *See—*
Danon, Joseph S., 5,701,889, Cl. 128-204.290.
Conci, Dennis: *See—*
Biberger, Maximilian; and Conci, Dennis, 5,702,573, Cl. 204-192.120.
Conger, William G.: *See—*
Kurihara, Katsumi; Kawamoto, Shiro; Nemazi, John E.; and Conger, William G., 5,701,855, Cl. 123-73.0AD.
Conkling, Stephen J. Unsheathed cable activated damper control system. 5,702,298, Cl. 454-322.000.
Conkright, Gary W., to Profile Systems, LLC. Medication dispensing and timing system utilizing time reference message. 5,703,786, Cl. 364-479.140.
Connor, Daniel Stedman: *See—*
Sherry, Alan Edward; Connor, Daniel Stedman; Stidham, Robert Emerson; and Vinson, Phillip Kyle, 5,703,033, Cl. 510-237.000.
Connor, David Thomas; and Gracheck, Stephen Joseph, to Warner-Lambert Company. Method for inhibiting and controlling viral growth. 5,703,069, Cl. 514-211.000.
Connor, David Thomas: *See—*
Baragi, Vijaykumar; Boschelli, Diane Harris; Connor, David Thomas; and Renkiewicz, Richard Raymond, 5,703,119, Cl. 514-459.000.
Connors, Clifford J.: *See—*
Wannagot, Gary A.; Keepers, Curtis Brent; Goebel, Timothy R.; Cwiakala, James M., Jr.; and Connors, Clifford J., 5,703,354, Cl. 250-214.0VT.
Consolidated Devices, Inc.: *See—*
Grabovac, Bosko, 5,703,277, Cl. 73-1.120.
Consolidated Papers, Inc.: *See—*
Damrau, Wayne A.; and Mayer, Michael A., 5,702,765, Cl. 427-356.000.
Consorzio per la Ricerca sulla Microelettronica nel Mezzogiorno: *See—*
Zambrano, Raffaele, 5,703,385, Cl. 257-212.000.
Constant Velocity Systems, Inc.: *See—*
Baltazar, Lawrence C.; and Naumann, John O., 5,702,294, Cl. 451-541.000.
Continental Plastic Containers, Inc.: *See—*
Beaver, Ted L., 5,702,033, Cl. 222-94.000.
Convault, Inc.: *See—*
Lindquist, Thomas R., 5,702,026, Cl. 220-745.000.
Conville, John J.; Chwalik, Robert; Desai, Shrikant V.; Turcotte, David E.; and Lyon, James T., to Ashland Inc. Aqueous corrosion inhibitor formulations. 5,702,631, Cl. 252-76.000.
Cook, Nancy A.; and Murray, Anne M. Gun safe with dual method of gaining access therein. 5,701,770, Cl. 70-63.000.
Cooper, David H. Modular intra-oral imaging system video camera. 5,702,249, Cl. 433-29.000.
Cooper, Deani Lee: *See—*
Modrich, Paul L.; Su, Shin-San; Au, Karin G.; Lahue, Robert S.; Cooper, Deani Lee; and Worth, Leroy, Jr., 5,702,894, Cl. 435-6.000.
Cooper Industries, Inc.: *See—*
Ford, James Arthur; Bertva, Don Lee; Kennedy, James Murrell; and Preadorf, Ronald Lynn, 5,701,940, Cl. 160-84.050.
Corbett, Sue: *See—*
Weder, Donald E.; and Corbett, Sue, 5,701,721, Cl. 53-397.000.
Corbin, Jackie D.: *See—*
Beavo, Joseph A.; Corbin, Jackie D.; Ferguson, Kenneth M.; Francis, Sharron H.; Kadlecek, Ann; Loughney, Kate; McAllister-Lucas, Linda M.; Sonnenburg, William K.; and Thomas, Melissa K., 5,702,936, Cl. 435-196.000.
Cordis Corporation: *See—*

Klunder, Rento Willem; and Van Werven-Franssen, Gerda Hendrika Maria, 5,702,410, Cl. 606-194.000.
Cordoba, Sylvestre: *See—*
Whittier, John R.; Cordoba, Sylvestre; and Diamond, Bruce H., 5,702,080, Cl. 248-205.500.
Corey, Douglas Arthur; Landauer, Thomas K.; and Wonsiewicz, Bud C., to U S West Technologies, Inc. Video programming retrieval using extracted closed caption data which has been partitioned and stored to facilitate a search and retrieval process. 5,703,655, Cl. 348-468.000.
Cormouls-Houles, Jacky, to Societe Civile Chenier. Process and installation for roasting fruits or nuts. 5,702,751, Cl. 426-629.000.
Corning Incorporated: *See—*
Bocko, Peter L.; Eid, Bernard A.; Johnson, Ronald E.; Lock, William E.; Shoup, Robert D.; and Themont, Jean-Pierre, 5,701,815, Cl. 101-211.000.
Henderson, Danny L.; and Powers, Dale R., 5,703,191, Cl. 528-31.000.
Kragle, Harry A.; Stumpff, Floyd E.; and Treacy, David R., Jr., 5,702,659, Cl. 264-177.110.
Miller, William J.; and Nolan, Daniel A., 5,703,975, Cl. 385-16.000.
Cornwell, William Dale, Jr.: *See—*
Fulks, Gary Chris; and Cornwell, William Dale, Jr., 5,703,748, Cl. 361-153.000.
Corona Energy Partners, Ltd.: *See—*
Carleton, Finis E.; and Holtrop, Joe W., 5,703,299, Cl. 73-863.830.
Corral, Fernando Del: *See—*
Puckett, Wallace E.; Zollinger, Mark L.; and Corral, Fernando Del, 5,703,131, Cl. 514-642.000.
Corrigan, John E., III: *See—*
Kay, Stanley E.; Kaul, Pradeep; Parr, Michael I.; Avis, Graham; Corrigan, John E., III; Wendling, Daniel; and Mehta, Ashok D., 5,703,881, Cl. 370-468.000.
Corvas International, Inc.: *See—*
Semple, Joseph Edward; Ardecky, Robert John; Nutt, Ruth Foelsche; Ripka, William Charles; Rowley, David C.; Lim-Wilby, Marguerita S. L.; and Brunck, Terence Kevin, 5,703,208, Cl. 530-331.000.
Cosford, Nicholas D.: *See—*
McDonald, Ian A.; Whitten, Jeffrey P.; and Cosford, Nicholas D., 5,703,100, Cl. 514-343.000.
Cossement, Eric; Bodson, Guy; and Gobert, Jean, to U C B S.A. Enantiomers of 1-[(4-chlorophenyl)phenylmethyl]-[(4-methylphenyl)sulfonyl]piperazine. 5,703,082, Cl. 514-255.000.
Costa Pereira, Pedro: *See—*
Arnaud, Jean-Claude; and Costa Pereira, Pedro, 5,702,548, Cl. 152-547.000.
Coste, Christian: *See—*
Yvin, Jean-Claude; and Coste, Christian, 5,703,009, Cl. 504-116.000.
Cote, Gregory L.: *See—*
Leathers, Timothy D.; Hayman, G. Thomas; and Cote, Gregory L., 5,702,942, Cl. 435-252.900.
Cottenden, Alan M., to McNeil-PPC, Inc. Male incontinence device. 5,702,381, Cl. 604-385.100.
Cotteret, Jean: *See—*
Lagrange, Alain; Vandenbosche, Jean Jacques; Cotteret, Jean; and Audousset, Marie Pascale, 5,703,266, Cl. 558-408.000.
Courtaulds Fibres (Holdings) Limited: *See—*
Urben, Peter George, 5,702,515, Cl. 106-200.200.
Cover, Walter E.; and Davidner, Alan A., to Becton Dickinson and Company. Retractable-needle cannula insertion set with refinements to better control leakage, retraction speed, and reuse. 5,702,367, Cl. 604-110.000.
Cowan, Jerry W.; and Felton, Jeffrey K., to Custom Metalcraft, Inc. Sloped bottom tank. 5,701,776, Cl. 72-332.000.
Cox, Karmen D., to Emerson Electric Co. Power converter and control system for a motor using an inductive load and method of doing the same. 5,703,456, Cl. 318-701.000.
Cox, W. Royall: *See—*
Hayes, Donald J.; and Cox, W. Royall, 5,703,631, Cl. 347-47.000.
Coyle, Donald C.: *See—*
McKibben, Kenneth D.; Gould, Alan P.; Wuepper, Thomas E.; Minor, Daniel D.; Salgat, Mark T.; Marthaler, David; Speaks, Jackie M.; Macheske, Robert L.; Good, David; Gillette, Richard A.; Bond, Philip L.; Coyle, Donald C.; Rentfrow, Darrell; Stiens, Thomas O.; and Stevens, Larry M., 5,701,945, Cl. 164-130.000.
Coyne, Jeannette, executrix: *See—*
Allen, Donald Eugene; Stringer, Steven Ray; Coyne, Richard Dale, deceased, 5,701,645, Cl. 29-25.350.
Coyne, Richard Dale, deceased (by Jeannette Coyne, executrix): *See—*
Allen, Donald Eugene; Stringer, Steven Ray; Coyne, Richard Dale, deceased, 5,701,645, Cl. 29-25.350.
Craig, Edward Vincent; Kyle, Richard Frank; and Straight, Christopher Bryan, to Kirschner Medical Corporation. Modular humeral prosthesis for reconstruction of the humerus. 5,702,486, Cl. 623-23.000.
Crain Industries, Inc.: *See—*
Ricciardi, Michael A.; and Griffiths, Anthony C. M., 5,702,652, Cl. 264-37.000.
Cramer, Charles E.: *See—*
Barth, Clyde H.; and Cramer, Charles E., 5,702,293, Cl. 451-364.000.
Crane, Patrick E.; and Lau, Ronnie C. Holographic synthesis. 5,703,702, Cl. 359-1.000.
Crase, Christopher J.: *See—*
Faiola, Norman A.; and Crase, Christopher J., 5,701,747, Cl. 68-63.000.
Crass, Gerhard; and Gatter, Erich, to Hoechst Aktiengesellschaft. Car dry-bright composition. 5,703,029, Cl. 510-242.000.
Cripe, Jerry D.; Maudie, Theresa Ann; Reed, Charles L.; and Menchio, Michael P., to Motorola, Inc. Apparatus for testing electronic devices in hostile media. 5,703,482, Cl. 324-158.100.
Crook, David T.; and Stroud, Ernest T., to Analog Devices, Inc. Drive circuit and method for controlling the cross point levels of a differential CMOS switch drive signal. 5,703,519, Cl. 327-387.000.
Crosato, Bruno: *See—*
Sivilotti, Olivo Giuseppe; Leone, Gino Luigi; Sutherland, James Gordon; Thorburn, Herbert James; and Crosato, Bruno, 5,701,775, Cl. 72-201.000.
Cross, Richard D. Pivotally mounted banner harness. 5,701,840, Cl. 116-174.000.
Crowley, Kevin J., to Fila U.S.A., Inc. Protective shoelace cover. 5,701,688, Cl. 36-72.00R.
Crowley, R. Hugh: *See—*
Caulder, Jerry; Crowley, R. Hugh; Zorner, Paul S.; and Evans, Steven L., 5,703,011, Cl. 504-130.000.
Caulder, Jerry; Crowley, R. Hugh; Zorner, Paul S.; and Evans, Steven L., 5,703,012, Cl. 504-130.000.
Caulder, Jerry; Crowley, R. Hugh; Zorner, Paul S.; and Evans, Steven L., 5,703,013, Cl. 504-131.000.
Caulder, Jerry; Crowley, R. Hugh; Zorner, Paul S.; and Evans, Steven L., 5,703,014, Cl. 504-142.000.
Crupper, Scott: *See—*
Iandolo, John J.; and Crupper, Scott, 5,703,040, Cl. 514-2.000.
Crystal Semiconductor: *See—*
Callahan, Michael J., Jr.; and Ludden, Christopher A., 5,703,617, Cl. 345-98.000.
Cselt- Centro Studi E Laboratori Telecomunicazioni S.P.A.: *See—*
Bertin, Giorgio; and Accatino, Luciano, 5,703,547, Cl. 333-209.000.
CSR Limited: *See—*
Hawkins, David John Drake, 5,702,200, Cl. 404-25.000.
Cui, Changxing; Baughman, Ray H.; Iqbal, Zafar; Kazmar, Theodore R.; and Dahlstrom, David K., to AlliedSignal Inc. Piezoelectric ceramic-polymer composites. 5,702,629, Cl. 252-62.90R.
Cullen, Thomas John, to Northern Telecom Limited. Wavelength resonant fused fibre coupler. 5,703,976, Cl. 385-28.000.
Cully, Jan: *See—*
Heidlas, Jürgen; and Cully, Jan, 5,703,228, Cl. 536-127.000.
Cummins, Thomas J.; Atwood, Susan Melissa; Bergmeyer, Lynn; Findlay, John Bruce; Sutherland, John W.H.; and Kerschner, JoAnne H., to Clinical Diagnostic Systems. Diagnostic compositions, elements, methods and test kits for amplification and detection of two or more DNA's using primers having matched melting temperatures. 5,702,901, Cl. 435-6.000.
Curotto, James E.: *See—*
Morris, Sandra A.; Curotto, James E.; Bills, Gerald F.; Dreikorn, Sarah J.; Streicher, Stanley L.; Zink, Deborah L.; Thompson, John R.; Basilio, Angela; Pelaez, Fernando; Diez, Maria Teresa; and Vicente, Francisca, 5,702,929, Cl. 435-118.000.
Curran, Patrick D.: *See—*
Kroll, William B.; and Curran, Patrick D., 5,702,071, Cl. 244-199.000.
Current, Wayne A., to International Visual Corp. Height adjustable framed sign holder. 5,701,695, Cl. 40-606.000.
Curtis, Kevin; and Wilson, William Larry, to Lucent Technologies Inc. Tilt multiplex holography. 5,703,705, Cl. 359-22.000.
Cushman, Michael R.: *See—*
Krutak, James J.; Cushman, Michael R.; Coates, Clarence A.; Parham, William W.; Weaver, Max A.; and Patonay, Gabor, 5,703,229, Cl. 540-140.000.
Custom Metalcraft, Inc.: *See—*
Cowan, Jerry W.; and Felton, Jeffrey K., 5,701,776, Cl. 72-332.000.
Custom Packaging Systems, Inc.: *See—*
LaFleur, Arthur E.; and LaFleur, Lee, 5,701,650, Cl. 29-267.000.
Cusumano, Joseph Victor; Diana, William Daniel; Emert, Jacob; Gorda, Keith Raymond; Schlosberg, Richard H.; Young, David A.; Yezrielev, Albert I.; Eckstrom, William Bernard; Manry, Edris Eileen; and Keenan, Michael John, to Exxon Chemical Patents Inc. Functionalization of polymers based on Koch chemistry and derivatives thereof. 5,703,256, Cl. 554-224.000.
Cwiakala, James M., Jr.: *See—*
Wannagot, Gary A.; Keepers, Curtis Brent; Goebel, Timothy R.; Cwiakala, James M., Jr.; and Connors, Clifford J., 5,703,354, Cl. 250-214.0VT.
Cykana, Michael J.: *See—*
Allen, Ronald L.; Bishop-Jones, Brenda J.; Cykana, Michael J.; Lui, Eddie K.; and Sipe, Stanley Wayne, 5,703,783, Cl. 364-478.010.
Cytomed, Inc.: *See—*
Cai, Xiong; Fura, Aberra; and Qian, Changgeng, 5,703,093, Cl. 514-312.000.
DaCosta, Victor M.: *See—*
Martin, Russel A.; Bruce, Richard H.; DaCosta, Victor M.; Fiske, Thomas G.; Lewis, Alan G.; Silverstein, Louis D.; Steemers, Hugo L.; Thompson, Malcolm J.; and Turner, William D., 5,703,621, Cl. 345-147.000.
Dade International Inc.: *See—*
Hemker, Hendrick Coenraad; Wagenvoord, Robert Johan; and Kolde, Hans-Jurgen, 5,702,912, Cl. 435-13.000.
Daewoo Electronics Co., Ltd.: *See—*
Byon, Sung-Kwang, 5,702,840, Cl. 429-89.000.

Kim, Sang-Ho, 5,703,647, Cl. 348-403.000.

Park, Myung-Hyun; Koo, Myung-Kwon; and Um, Min-Sik, 5,702,569, Cl. 156-662.100.

Sa, Yong-Jae, 5,701,805, Cl. 99-331.000.

Shin, Jun-Chul, 5,702,168, Cl. 312-405.000.

Daewoo Heavy Industries Ltd.: *See*—

Lee, Won Ki, 5,701,980, Cl. 191-4.000.

Daewood Electronics Co. Ltd: *See*—

Cho, In-Su, 5,701,767, Cl. 68-134.000.

Dafforn, Kenneth R.: *See*—

Austin, Charles E.; Dafforn, Kenneth R.; and McElhenney, Jay J., 5,702,390, Cl. 606-48.000.

Dahan, Michael; and Ehrenreich, John M., to Fiber-Conn Assemblies, Inc. Pre-terminated optical fibers. 5,703,981, Cl. 385-78.000.

Dahl, Geoff: *See*—

Heddle, Robert M.; Yerrace, Frank Dominic; and Dahl, Geoff, 5,703,794, Cl. 364-514.00R.

Dahlhaus, Uwe: *See*—

Odenwälder, Heinrich; Langen, Hans; Dahlhaus, Uwe; and Schütz, Heinz-Dieter, 5,702,877, Cl. 430-551.000.

Dahlstrom, David K.: *See*—

Cui, Changxing; Baughman, Ray H.; Iqbal, Zafar; Kazmar, Theodore R.; and Dahlstrom, David K., 5,702,629, Cl. 252-62.90H.

Dahlstrom, Norris A.: *See*—

Schoen, Jerry W.; Dahlstrom, Norris A.; and Klapheke, Christopher G., 5,702,539, Cl. 148-111.000.

Dai Nippon Printing Co., Ltd.: *See*—

Fujii, Hideaki; Ishiga, Hiroshi; Harayama, Masatoshi; and Oka, Motohiro, 5,703,433, Cl. 313-484.000.

Tarumoto, Norihiro; Miyashita, Hiroyuki; Iimura, Yukio; and Mikami, Koichi, 5,702,847, Cl. 430-5.000.

Daicel Chemical Industries, Ltd.: *See*—

Kawada, Naoki; Yamazaki, Noritsugu; Imoto, Takafumi; and Ikura, Kiyoshi, 5,702,928, Cl. 435-121.000.

Daifuku Co., Ltd.: *See*—

Enomoto, Masahiro, 5,701,992, Cl. 198-370.060.

Daijyogo, Shinichi: *See*—

Sakakibara, Keisuke; Murasaki, Ryuichi; Daijyogo, Shinichi; and Minato, Tsuyoshi, 5,702,797, Cl. 428-100.000.

Daimler-Benz Aerospace AG: *See*—

Bruederle, Ernst, 5,702,067, Cl. 244-170.000.

Feierlein, Johannes; and Rieger, Ulrich, 5,703,321, Cl. 102-427.000.

Dainippon Screen Mfg. Co., Ltd.: *See*—

Matsumura, Yoshio; and Shimaji, Katsumi, 5,701,627, Cl. 15-88.200.

Takeda, Morihiro; and Nakahara, Masanao, 5,703,729, Cl. 359-821.000.

Dalco Industries, Ltd.: *See*—

Knipe, Richard E., Jr.; Jacob, Savarimuthu M.; and Mancini, Thomas, 5,701,922, Cl. 134-100.100.

Dalebout, William T.: *See*—

Watterson, Scott R.; Dalebout, William T.; and Miller, Frank Troy, 5,702,325, Cl. 482-54.000.

D'Alessio, Keith: *See*—

Sarver, David; D'Alessio, Keith; and D'Alessio, Raymond A., 5,702,656, Cl. 264-102.000.

D'Alessio, Raymond A.: *See*—

Sarver, David; D'Alessio, Keith; and D'Alessio, Raymond A., 5,702,656, Cl. 264-102.000.

D'Alleva, Randall: *See*—

Buchhop, Thomas Robert; D'Alleva, Randall; Darnell, Ronald Keith; Little, Jack Ryan; and Pedersen, Curtis Thomas, 5,703,777, Cl. 364-431.062.

Dallhammer, Peter: *See*—

Wesp, Horst; and Dallhammer, Peter, 5,701,698, Cl. 42-69.020.

Dalsa, Inc.: *See*—

Farrier, Michael G.; Kamasz, Stacy R.; Ma, Fred S. F.; and Bendett, Mark P., 5,703,639, Cl. 348-241.000.

Dam, Oscar G., to Xera Technologies Ltd. Shaft furnace for direct reduction of oxides. 5,702,246, Cl. 432-95.000.

Damrau, Wayne A.; and Mayer, Michael A., to Consolidated Papers, Inc. Method of applying a film of coating material to a paper web including successive doctoring steps. 5,702,765, Cl. 427-356.000.

Damson, Erich: *See*—

McPherson, Roger W.; Shrive, Nigel G.; Damson, Erich; Frank, Cyril B.; Lhenen, Fred; and Schachar, Norman S., 5,701,913, Cl. 128-774.000.

Dana Corporation: *See*—

Baxter, Ralph W., Jr., 5,702,319, Cl. 475-88.000.

Hegemier, Timothy Alan; and Binford, John Dudley, 5,701,861, Cl. 123-193.200.

Pressler, John E., 5,702,162, Cl. 301-105.100.

D'Andrade, Bruce M.: *See*—

Wachtel, Jeffrey I.; and D'Andrade, Bruce M., 5,701,672, Cl. 30-28.000.

Danek Medical, Inc.: *See*—

McKay, William F., 5,702,449, Cl. 623-17.000.

Daneshvar, Yousef. Urinal container having internal partitions and motor-powered suction device. 5,701,612, Cl. 4-144.300.

Danfoss A/S: *See*—

Arbjerg, Niels, 5,701,970, Cl. 180-417.000.

Friedrichsen, Welm, 5,701,795, Cl. 91-446.000.

Danielson, Daniel R.: *See*—

Seaver, Albert E.; Scheel, Lyle N.; Erickson, Luther E.; and Danielson, Daniel R., 5,702,527, Cl. 118-410.000.

Danisch, Peter: *See*—

Kneip, Michael; and Danisch, Peter, 5,702,490, Cl. 8-94.230.

Danon, Joseph S., to Conax Florida Corporation. Oxygen breathing controller having a G-sensor. 5,701,889, Cl. 128-204.290.

Dapper, Mark J.; Carlin, Barry W.; and Geile, Michael J., to USA Digital Radio Partners, L.P. Method and apparatus for improving the quality of AM compatible digital broadcast system signals in the presence of distortion. 5,703,954, Cl. 381-15.000.

Darbonne, Luc, to Societe de Developpment de L'Industrie Agro-Alimentaire et de la Pepiniere Europeenne - Sodiape. Method for processing fresh plants to be stored between low positive and negative temperatures. 5,702,750, Cl. 426-615.000.

Darga, Juergen: *See*—

Goymann, Volkmar; Anapliotis, Emmanuel; and Darga, Juergen, 5,702,484, Cl. 623-23.000.

Darnell, Ronald Keith: *See*—

Buchhop, Thomas Robert; D'Alleva, Randall; Darnell, Ronald Keith; Little, Jack Ryan; and Pedersen, Curtis Thomas, 5,703,777, Cl. 364-431.062.

Das, Chandan; Gaubatz, Ulrich; and Gottwald, Erich, to Siemens Aktiengesellschaft. Adjustable optical delay line. 5,703,708, Cl. 359-140.000.

Das, Satyendranath. High Tc superconducting ferroelectric MMIC phase shifters. 5,703,020, Cl. 505-210.000.

Dasilva-Jardine, Paul A.: *See*—

Cameron, Kimberly O.; Dasilva-Jardine, Paul A.; and Rosati, Robert L., 5,703,108, Cl. 514-382.000.

Datacard Corporation: *See*—

Lundstrom, Robert W.; McCumber, Roger D.; and Sannel, Benjamin H., 5,701,727, Cl. 53-569.000.

Dauth, Jochen; Herzig, Christian; Deubzer, Bernward; Schnitzer, Klaus; and Huettner, David, to Wacker-Chemie GmbH. Crosslinkable compositions. 5,703,190, Cl. 528-12.000.

Davidner, Alan A.: *See*—

Cover, Walter E.; and Davidner, Alan A., 5,702,367, Cl. 604-110.000.

Davidson, Alan Hornsby: *See*—

Allanson, Nigel Mark; and Davidson, Alan Hornsby, 5,703,059, Cl. 514-53.000.

Davis, Alan Merle; and Blickhan, Joseph David, to Harris Corporation. Liquid cooling system for high power solid state AM transmitter. 5,703,536, Cl. 330-289.000.

Davis, Clark C.: *See*—

Jacobsen, Stephen C.; and Davis, Clark C., 5,703,422, Cl. 310-82.000.

Davis, James A.; Wasitis, William A.; and Barham, William F., to Bridgestone/Firestone, Inc. Premolded pipe flashing compositions. 5,703,154, Cl. 524-525.000.

Davis, James G.: *See*—

Greene, Mark I.; and Davis, James G., 5,702,948, Cl. 435-348.000.

Davis, James Talmage, II: *See*—

Burrell, Dennis A.; Davis, James Talmage, II; and Flores, Mauricio, 5,703,600, Cl. 343-700.0MS.

Davis, John J.: *See*—

Rokita, Stephen R.; and Davis, John J., 5,702,046, Cl. 227-110.000.

Davis, Marvin B.; and Murphy, Kent, to Discovision Associates. Cartridge-loading apparatus with improved cartridge receiver. 5,703,857, Cl. 369-77.200.

Davis, Rex Mountford, to Switched Reluctance Drives, Ltd. Power supply to a stator of a polyphase reluctance machine. 5,703,457, Cl. 318-701.000.

Davis, Richard L.; and Balch, Philip G., to Land Resource Associates. Prefabricated modular portable livestock shelter. 5,701,705, Cl. 52-68.000.

Davison, Douglas W.: *See*—

Hushbeck, Donald F.; Yuan, Yusheng; and Davison, Douglas W., 5,701,959, Cl. 166-387.000.

Davison, Paul O.: *See*—

Rustad, Andre M.; and Davison, Paul O., 5,701,887, Cl. 128-204.170.

Dawson, David M.: *See*—

Langstein, Gerhard; Bochmann, Manfred; and Dawson, David M., 5,703,182, Cl. 526-185.000.

Dawson, David R.: *See*—

Liebke, William R.; Dawson, David R.; Fredette, Mark A.; and Goodstein, Mark B., 5,702,288, Cl. 451-36.000.

Deacon, David A.G.: *See*—

Brinkman, Michael J.; Deacon, David A.G.; and Bischel, William K., 5,703,710, Cl. 359-283.000.

Deacon Research: *See*—

Brinkman, Michael J.; Deacon, David A.G.; and Bischel, William K., 5,703,710, Cl. 359-283.000.

Dean, Nicholas: *See*—

Bennett, C. Frank; and Dean, Nicholas, 5,703,054, Cl. 514-44.000.

Dean, Richard H.: *See*—

Berry, Joel L.; Ferrario, Carlos M.; Dean, Richard H.; and Newman, Virginia S., 5,702,419, Cl. 606-198.000.

Debaene, Frans J.: *See*—

Llanos, Zenon R.; Provoost, Guido F.; Deering, William G.; and Debaene, Frans J., 5,702,500, Cl. 75-10.250.

DeBalko, George Andrew, to Lucent Technologies Inc. Network interface device. 5,703,944, Cl. 379-399.000.

De Bruyn, Marcel Frans Leopold: *See*—

Van Lommen, Guy Rosalia Eugéne; De Bruyn, Marcel Frans Leopold; and Janssens, Walter Jacobus Joseph, 5,703,115, Cl. 514-456.000.

DEC International, Inc.: *See*—

Loehrke, John M., 5,702,032, Cl. 222-63.000.

DeCicco, Carl Peter: *See*—

Xue, Chu-Biao; DeGrado, William F.; DeCicco, Carl Peter; and Jacobson, Irina Cipora, 5,703,092, Cl. 514-303.000.

Deckner, George Endel: *See*—

Setser, Drew Douglas; and Deckner, George Endel, 5,703,026, Cl. 510-152.000.

DeCrescenzo, Gary A.: *See*—

Talley, John J.; Getman, Daniel P.; Lin, Ko-Chung; DeCrescenzo, Gary A.; Rogier, Donald J., Jr.; and Freskos, John N., 5,703,076, Cl. 514-237.500.

Deering, William G.: *See*—

Llanos, Zenon R.; Provoost, Guido F.; Deering, William G.; and Debaene, Frans J., 5,702,500, Cl. 75-10.250.

Dees, H. Craig, to Lockheed Martin Energy Systems, Inc. Cellulase producing microorganism ATCC 55702. 5,702,940, Cl. 435-252.100.

De Fazio, Thomas J.: *See*—

Tarter, Fred B.; Greene, Jeffrey M.; De Fazio, Thomas J.; Peck, Jan; Wylie, L. Stephen; Magnotte, Mark M.; Hall, Del; and Tarter, Scott A., 5,704,044, Cl. 395-204.000.

De Filippis, Pietro: *See*—

Guidi, Guido; Boezi, Giampaolo; and De Filippis, Pietro, 5,703,549, Cl. 335-78.000.

Defossez, Béatrice: *See*—

Mondon-Rossignol, Sylvie; and Defossez, Béatrice, 5,702,689, Cl. 424-63.000.

Degen, Peter J.; and Foss, Warren M., to Pall Corporation. Aramid fiber filtration sheet. 5,702,616, Cl. 210-767.000.

DeGrado, William F.: *See*—

Xue, Chu-Biao; DeGrado, William F.; DeCicco, Carl Peter; and Jacobson, Irina Cipora, 5,703,092, Cl. 514-303.000.

De Grave, Isidoor: *See*—

Schweinzer, Jürgen; Fischer, Joachim; De Grave, Isidoor; and Kögel, Wolfram, 5,703,135, Cl. 521-60.000.

Degremont: *See*—

Yvin, Jean-Claude; and Coste, Christian, 5,703,009, Cl. 504-116.000.

DeHaven, Robert Keith; and Wenzel, James F., to Motorola, Inc. Method for manufacturing a stimulus wafer for use in a wafer-to-wafer testing system to test integrated circuits located on a product wafer. 5,701,666, Cl. 29-831.000.

Dehennau, Claude; Depireux, Thierry; Fleche, Guy; Gosset, Serge; and Videau, Didier, to Solvay S.A.; and Roquette Freres. Biodegradable moulding compositions comprising a starch, a biodegradable polyester, and a salt of a hydroxycarboxylic acid. 5,703,160, Cl. 525-54.240.

Deka Products Limited Partnership: *See*—

Kamen, Dean L.; Ambrogi, Robert R.; Duggan, Robert J.; Heinzmann, Richard Kurt; Key, Brian R.; Skoskiewicz, Andrzej; and Kristal, Phyllis K., 5,701,965, Cl. 180-7.100.

Dekker, Martijn J., to U.S. Philips Corporation. Color cathode ray tube with eddy current reducing electron gun. 5,703,430, Cl. 313-409.000.

De Kock, Johannes C. J.: *See*—

Boute, Geert I. V.; and De Kock, Johannes C. J., 5,702,590, Cl. 208-251.00R.

Del Mar Avionics: *See*—

Cherry, Isaac R.; Bachman, John A.; Tanaka, David T.; So, Hangyick; and Henkin, Raphael, 5,701,894, Cl. 128-630.000.

Delagrange, Philippe: *See*—

Lesieur, Daniel; Fourmaintraux, Eric; Depreux, Patrick; Delagrange, Philippe; Renard, Pierre; and Guardiola-Lemaitre, Béatrice, 5,703,121, Cl. 514-469.000.

De La Prieta, Claudio: *See*—

Dietz, Hermann; Gruenwald, Werner; De La Prieta, Claudio; Lindemann, Gert; Eisele, Ulrich; and Schmiedel, Carmen, 5,702,580, Cl. 204-426.000.

Delavan Inc.: *See*—

Nesbitt, Gregory S.; and Shoemaker, Robert D., 5,701,732, Cl. 60-39.000.

Delco Electronics Corporation: *See*—

Ansari, Adil; and Zhang, Zhaohong, 5,703,583, Cl. 341-122.000.

Dikeman, John Mark; and Gose, Mark Wendell, 5,703,520, Cl. 327-439.000.

Hinze, Lee R., 5,703,754, Cl. 361-736.000.

Little, Lewis Henry; Hopkins, Russell Bolin; and Matly, John Michael, 5,703,296, Cl. 73-756.000.

Snider, Chris Ralph; and Osman, Kerwin Craig, 5,703,625, Cl. 345-169.000.

Whitson, Duane Eugene; O'Connor, Michael Joseph; and Stapert, Curtis Allen, 5,702,254, Cl. 439-57.000.

Woody, George R.; and Downer, Scott D., 5,703,462, Cl. 320-2.000.

Dell USA, L.P.: *See*—

Mermelstein, Lois D.; and Witte, Kendall C., 5,703,629, Cl. 345-213.000.

Del Monte, Michael G. Text storage and retrieval system and method. 5,704,060, Cl. 395-600.000.

Delone, Peter B. Electrical outlet shock protector. 5,703,329, Cl. 174-67.000.

DeMilly, Francois: *See*—

Broucke, Jacques; and DeMilly, Francois, 5,702,141, Cl. 295-7.000.

Demoise, Thomas J.: *See*—

Kanjo, Wajih; Smith, Eric; Demoise, Thomas J.; Girotti, Michael; McCabe, Thomas; Fessler, Charles B.; and Natschke, Scott, 5,701,974, Cl. 188-1.11R.

De Monbrun, Dianne L.: *See*—

De Monbrun, Michael A.; De Monbrun, Dianne L.; Sant, Jammie; and Sant, David M., 5,702,330, Cl. 482-105.000.

De Monbrun, Michael A.; De Monbrun, Dianne L.; Sant, Jammie; and Sant, David M. Male exercise device and method. 5,702,330, Cl. 482-105.000.

DeMoss, Mark: *See*—

Brownmiller, Curtis; Bencheck, Mike; Tran, Minh; Branton, Robert; DeMoss, Mark; and Landon, Steve, 5,704,036, Cl. 395-183.190.

Denfeld, Bernd: *See*—

Nied-Menninger, Thomas; Körtge, Randolf; and Denfeld, Bernd, 5,702,242, Cl. 418-150.000.

Deninno, Michael Paul; and McCarthy, Peter Andrew, to Pfizer Inc. Sterodial glycosides for treating hypercholesterolemia. 5,703,052, Cl. 514-26.000.

Denki Kagaku Kogyo Kabushiki Kaisha: *See*—

Terui, Yoshinori; and Terasaki, Ryuichi, 5,702,822, Cl. 428-446.000.

Dennison, Charles: *See*—

Jost, Mark; and Dennison, Charles, 5,702,990, Cl. 438-618.000.

Denso Corporation: *See*—

Sagisaka, Yasuo; and Hirata, Yoshihiko, 5,701,866, Cl. 123-339.150.

Torigoe, Eiichi; and Shimoya, Masahiro, 5,701,760, Cl. 62-524.000.

Tsunokawa, Masaru; Ozaki, Yukikatsu; Onimaru, Sadahisa; and Suzuki, Takahisa, 5,701,752, Cl. 62-183.000.

de Peretti, Ferdinand: *See*—

Argenson, Claude; de Peretti, Ferdinand; and Hovorka, Istvan, 5,702,452, Cl. 623-17.000.

Depireux, Thierry: *See*—

Dehennau, Claude; Depireux, Thierry; Fleche, Guy; Gosset, Serge; and Videau, Didier, 5,703,160, Cl. 525-54.240.

De Poorter, Johannes A.: *See*—

Valster, Adriaan; De Poorter, Johannes A.; and Acket, Gerard A., 5,703,894, Cl. 372-46.000.

Depreux, Patrick: *See*—

Lesieur, Daniel; Fourmaintraux, Eric; Depreux, Patrick; Delagrange, Philippe; Renard, Pierre; and Guardiola-Lemaitre, Béatrice, 5,703,121, Cl. 514-469.000.

Dequzman, Roberto Nguyen: *See*—

O'Young, Chi Lin; Shen, Yan-Fei; Dequzman, Roberto Nguyen; and Suib, Steven Lawrence, 5,702,674, Cl. 423-50.000.

Derby, Norwin C., to Super Sack Mfg. Corp. Method of manufacture of a glued bottom bulk container. 5,702,340, Cl. 493-220.000.

Derrick, John E.; and Herring, Christopher M. Cache bus snoop protocol for optimized multiprocessor computer system. 5,704,058, Cl. 395-495.000.

Desai, Shrikant V.: *See*—

Conville, John J.; Chwalik, Robert; Desai, Shrikant V.; Turcotte, David E.; and Lyon, James T., 5,702,631, Cl. 252-76.000.

Desai, Vikram D.: *See*—

Phillips, Peter E.; and Desai, Vikram D., 5,703,891, Cl. 372-38.000.

de Saint-Romain, Pierre; and Heraud, Alain, to Image S.A. Ink composition for marking and authenticating objects. 5,702,511, Cl. 106-31.320.

Desarmaux, Pierre: *See*—

Challande, Christian; Desarmaux, Pierre; and Thomas, Pascal, 5,702,119, Cl. 280-625.000.

Desgrandchamps, Francois; Eugene, Michel; Girrens, Nico; Muller, Fernand; and Spaniol, Sylvia, to Electrolux S.A.R.L. Method to refrigerate a jacket for keeping a transplant cold. 5,701,746, Cl. 62-62.000.

DeSilva, Melvin J.: *See*—

Lowndes, Douglas H.; Pedraza, Anthony J.; DeSilva, Melvin J.; and Kumar, Rajagopalan A., 5,703,341, Cl. 219-121.660.

deSolms, S. Jane; and Graham, Samuel L., to Merck & Co., Inc. Inhibitor of farnesyl-protein transferase. 5,703,241, Cl. 548-314.700.

DeSpain, Julianne M.; Oloff, Lawrence D.; and Rogers, Theodore W., to Active Motion Systems, LLC. Toe joint mobilization apparatus. 5,702,354, Cl. 601-27.000.

Desrosiers, Robert M. Safety gate. 5,701,701, Cl. 49-116.000.

Detzel, Roger A.: *See*—

Bases, Gary John; Detzel, Roger A.; Devault, Douglas James; and Ferkile, William Joseph, 5,701,711, Cl. 52-506.030.

Deubzer, Bernward: *See*—

Dauth, Jochen; Herzig, Christian; Deubzer, Bernward; Schnitzer, Klaus; and Huettner, David, 5,703,190, Cl. 528-12.000.

Deutsch, Peter K., to Marinco. Marine horn assembly for mounting on a boat wall structure. 5,703,335, Cl. 181-150.000.

Deutsche Telekom AG: *See*—

Fels, Peter; Wüstenhagen, Ulf; and Steinke, Gerhard, 5,703,955, Cl. 381-18.000.

Deutsche Thomson-Brandt GmbH: *See*—

Düllberg, Gerald; Peusens, Herbert; and Armbruster, Veit, 5,703,545, Cl. 333-202.000.

Hermann, Wolfgang; and Louvel, Jean-Paul, 5,703,764, Cl. 363-21.000.

DeVack, Donald Leonard: *See*—

Cheng, Alan Tat Yan; and DeVack, Donald Leonard, 5,701,745, Cl. 62-51.100.

Devault, Douglas James: *See*—

Bases, Gary John; Detzel, Roger A.; Devault, Douglas James; and Ferkile, William Joseph, 5,701,711, Cl. 52-506.030.

de Vecchis, Michel: *See*—

Carratt, Michel; and de Vecchis, Michel, 5,703,984, Cl. 385-106.000.

Devitt, John W.; Edwards, Thomas R.; and Bantel, Thomas E., to General Electric Company. Method for nondestructive/noncontact detection and quantification of alpha case on a surface of a workpiece made of titanium or a titanium-based alloy. 5,703,362, Cl. 250-341.800.

De Vos, Rik: *See*—

Gillis, Herbert Russell; Stanssens, Dirk; De Vos, Rik; Postema, Aaldrik Roelf; and Randall, David, 5,703,136, Cl. 5[illegible]1-128.000.

DeWitt, Sheila H. H.; Kell, Michael; Pavia, Michael R.; Kiely, John S.; Schroeder, Mel C.; Stankovic, Charles J.; and Ware, Steven, to Warner-Lambert Company. Apparatus and method for multiple simultaneous synthesis. 5,702,672, Cl. 422-131.000.

Dhar, Sanjay, to Mentor Graphics Corporation. Switch level simulation employing dynamic short-circuit ratio. 5,703,798, Cl. 364-578.000.

Dia Nielsen GmbH Zubehoer fuer Messtechnik: *See*—

Gehrer, Udo; Gibbels, Rolf; and Frenken, Heinz-Josef, 5,703,633, Cl. 347-86.000.

Diamond, Bruce H.: *See*—

Whittier, John R.; Cordoba, Sylvestre; and Diamond, Bruce H., 5,702,080, Cl. 248-205.500.

Diana, William Daniel: *See*—

Cusumano, Joseph Victor; Diana, William Daniel; Emert, Jacob; Gorda, Keith Raymond; Schlosberg, Richard H.; Young, David A.; Yezrielev, Albert I.; Eckstrom, William Bernard; Maury, Edris Eileen; and Keenan, Michael John, 5,703,256, Cl. 554-224.000.

Diaz, Ruben A.: *See*—

Herpst, Robert; and Diaz, Ruben A., 5,701,814, Cl. 100-269.150.

DiChiara, Robert A., Jr.; and Butner, Steven C., to McDonnell Douglas Corporation. Surface protection of porous ceramic bodies. 5,702,761, Cl. 427-181.000.

Dictahone Corporation: *See*—

Saltzman, Jeremy, 5,703,937, Cl. 379-88.000.

Diebold, Incorporated: *See*—

Benore, Randolph C.; Gagliano, Joseph; Gibson, Shawn; Grosswiller, Leo J.; McGeorge, Gram; and Neidlinger, Donald, 5,701,828, Cl. 109-36.000.

Dieras, Francis; and Billard, Jean-Luc, to Satelec S.A. Ultrasonic surgical knife. 5,702,360, Cl. 604-22.000.

Dietrichs, Alexander, to bima Industrie-Service GmbH. Wrought iron grating assembly. 5,701,714, Cl. 52-665.000.

Dietz, Hermann; Gruenwald, Werner; De La Prieta, Claudio; Lindemann, Gert; Eisele, Ulrich; and Schmiedel, Carmen, to Robert Bosch GmbH. Measuring sensor for determining the oxygen content of gas mixtures. 5,702,580, Cl. 204-426.000.

Dieudonne, Marc; and Perrier, Philippe, to Alcatel Cit. High capacity switching matrix. 5,703,707, Cl. 359-128.000.

Diez, Maria Teresa: *See*—

Morris, Sandra A.; Curotto, James E.; Bills, Gerald F.; Dreikorn, Sarah J.; Streicher, Stanley L.; Zink, Deborah L.; Thompson, John R.; Basilio, Angela; Pelaez, Fernando; Diez, Maria Teresa; and Vicente, Francisca, 5,702,929, Cl. 435-118.000.

DiGiovanni, David John; Judkins, Justin Boyd; Pedrazzani, Janet Renee; Vengsarkar, Ashish Madhukar; and Walker, Kenneth Lee, to Lucent Technologies Inc. Temperature insensitive long-period fiber grating devices. 5,703,978, Cl. 385-37.000.

DiGirolamo, Martin V.: *See*—

Bracken, Peter W.; Brener, Jeffery R.; DiGirolamo, Martin V.; Mullinix, Sam E., Jr.; Stafford, Donald W.; and Wallin, Peter E., 5,702,812, Cl. 428-323.000.

Digital Audio Disc Corporation: *See*—

Mitchell, Michael L.; Fite, Barry Alan; Saito, Akiya; and New, Anthony C., 5,703,858, Cl. 369-58.000.

Digital Equipment Corporation: *See*—

Birch, Stephen Michael; Gavrel, Gerard Michel; and Memon, Zaffar Iqbal, 5,701,667, Cl. 29-852.000.

Di Gregorio, Vito. Leak free lid with closure and spout. 5,702,025, Cl. 220-717.000.

Dikeman, John Mark; and Gose, Mark Wendell, to Delco Electronics Corporation. Integrated inductive load snubbing device using a multi-collector transistor. 5,703,520, Cl. 327-439.000.

Diller, Robert E.: *See*—

Garcia, Glenn M.; and Diller, Robert E., 5,701,680, Cl. 33-526.000.

Dingle, Brenda: *See*—

Vu, Duy-Pach; Dingle, Brenda; and Cheong, Ngwe, 5,702,963, Cl. 437-41.0GS.

Dion, John K.: *See*—

Zicker, Robert G.; and Dion, John K., 5,703,934, Cl. 379-61.000.

Discovision Associates: *See*—

Ceshkovsky, Ludwig, 5,703,847, Cl. 369-44.280.

Davis, Marvin B.; and Murphy, Kent, 5,703,857, Cl. 369-77.200.

Wise, Adrian P.; and Birch, Nicholas, 5,703,793, Cl. 364-514.00R.

Dive, Michel: *See*—

Hummer, Jacques; Dive, Michel; Laurençon, Michel; and Clauze, Jacques, 5,702,459, Cl. 623-20.000.

Diversey Lever, Inc.: *See*—

Borseth, Donald; and McCall, David, 5,703,175, Cl. 525-340.000.

Dixie Yarns, Inc.: *See*—

Rees, John Joseph M.; and Hixon, Leonard L., Jr., 5,701,729, Cl. 37-3.000.

Dixon, John R., III. Insulation support system for metal frame construction and method relating thereto. 5,701,709, Cl. 52-404.100.

Doan, Tien D., to Caterpillar Inc. Method and apparatus for controlling the oscillatory motion of a test device. 5,703,446, Cl. 318-119.000.

Dobbs, Douglas B.; and Wanbaugh, Linn, to Calmar Inc. Dual foamer nozzle assembly for trigger sprayer. 5,702,058, Cl. 239-343.000.

Doblar, Randy A.: *See*—

Sharkey, J. Brian; Doblar, Randy A.; Bothwell, Frank E.; Belt, Ronald A.; and Page, Edward A., 5,703,835, Cl. 367-124.000.

Dobler, Karl-Otto, to Robert Bosch GmbH. Illumination device arranged in front part of vehicle. 5,702,174, Cl. 362-80.000.

Dobrowolski, Flavien: *See*—

Burtin, Jean Pierre; Dobrowolski, Flavien; and Thome, Caryl, 5,703,770, Cl. 363-61.000.

Dochniak, Michael J.: *See*—

Duan, Youlu; Dochniak, Michael J.; and Stammler, Sonja, 5,703,158, Cl. 524-840.000.

Dodeca LLC: *See*—

McCutchen, David, 5,703,604, Cl. 345-8.000.

Dodgen, John N. Table for recreational vehicles. 5,701,826, Cl. 108-44.000.

Doehler-Jarvis Technologies, Inc.: *See*—

Young, Robert W., 5,701,944, Cl. 164-113.000.

Doerschuk, Claire M.; Fong, Sherman; Hebert, Caroline Alice; Kim, Kyung Jin; and Leong, Steven R., to Genentech, Inc. Anti-IL-8 monoclonal antibodies for treatment of inflammatory disorders. 5,702,946, Cl. 435-320.100.

Doh, Gyun-Hae: *See*—

Oh, Seung-Hun; Doh, Gyun-Hae; and Kang, Sun-Woong, 5,702,497, Cl. 65-412.000.

Dohi, Keiji: *See*—

Numata, Yoshito; Asada, Hidehisa; Dohi, Keiji; Fukunaga, Takahiro; and Taniguchi, Yasushi, 5,702,910, Cl. 435-7.940.

Dohnomae, Hitoshi: *See*—

Shimokawa, Kenji; Dohnomae, Hitoshi; Mukai, Toshio; and Shimanoe, Kengo, 5,702,793, Cl. 428-64.300.

Doi, Kousuke: *See*—

Niikura, Satoshi; Suzuki, Takako; Doi, Kousuke; Kohara, Hidekatsu; and Nakayama, Toshimasa, 5,702,861, Cl. 430-191.000.

Doi, Masato; Narui, Hironobu; and Nakao, Takashi, to Sony Corporation. Optical device which detects reflected light with a push-pull method without dividing the reflected light. 5,703,863, Cl. 369-112.000.

Doi, Nobuyuki: *See*—

Yamaguchi, Hiroyuki; Naito, Masayuki; Inayoshi, Satoshi; Doi, Nobuyuki; Saida, Kazunori; and Sumiya, Yasuhiko, 5,701,949, Cl. 165-42.000.

Dokos, James A., to United States Department of Energy. Remote drill bit loader. 5,702,335, Cl. 483-1.000.

Dolphin, David: *See*—

Boyle, Ross W.; Dolphin, David; and Johnson, Claire K., 5,703,230, Cl. 540-145.000.

Dolphin, Janet L., to Spyrus, Inc. System and method for access data control. 5,703,951, Cl. 380-25.000.

Dong, Dennis F.: *See*—

Clifford, Arthur L.; Dong, Dennis F.; Mumby, Timothy A.; and Rogers, Derek J., 5,702,587, Cl. 205-760.000.

Dong, Nicholas N. G.: *See*—

Capello, William N.; and Dong, Nicholas N. G., 5,702,477, Cl. 623-22.000.

Dony, Dominique: *See*—

Perrin, Etienne; and Dony, Dominique, 5,702,091, Cl. 267-64.120.

Donzis, Byron A. Substantially purified beta (1,3) finely ground yeast cell wall glucan composition with dermatological and nutritional uses. 5,702,719, Cl. 424-442.000.

Dorman, Richard A., to Mechanical Technology Inc. Bias current control circuit. 5,703,424, Cl. 310-90.500.

Doscher, Mary Ehlers, to American Cyanamid Company. Method for detecting flukicidal activity. 5,702,681, Cl. 424-9.200.

Dougherty, Robert P., to Boeing Company, The. Apparatus and method for reducing noise emissions from a gas turbine engine inlet. 5,702,231, Cl. 415-119.000.

Douglas, Kenneth: *See*—

Pankove, Jacques Isaac; Moddel, Garret Robin; and Douglas, Kenneth, 5,703,896, Cl. 372-50.000.

Doumen, Achille Jules Edmond; Goovaerts, Luc; and Vega, Jose Luis, to Procter & Gamble Company, The. Process for the manufacture of free-flowing detergent granules. 5,703,037, Cl. 510-444.000.

Douse, David Elson; Ellis, Wayne Frederick; and Hedberg, Erik Leigh, to International Business Machines Corporation. Memory device with programmable self-refreshing and testing methods therefore. 5,703,823, Cl. 365-222.000.

Doutreluingne, Pierre: *See*—

Foos, Jacques; Guy, Alain; Lemaire, Marc; Leclere, Bruno; Le Buzit, Gérard; and Doutreluingne, Pierre, 5,702,608, Cl. 210-668.000.

Dow Chemical Company, The: *See*—

Mussell, Robert D., 5,702,755, Cl. 427-115.000.

Rosen, Robert K.; and Kolthammer, Brian W.S., 5,703,257, Cl. 556-7.000.

Shankar, Ravi B.; Romer, Duane R.; and Pews, R. Garth, 5,703,102, Cl. 514-362.000.

Shankar, Ravi B.; Romer, Duane R.; and Pews, R. Garth, 5,703,114, Cl. 514-441.000.

Timmers, Francis J., 5,703,187, Cl. 526-282.000.

Downer, Scott D.: *See*—

Woody, George R.; and Downer, Scott D., 5,703,462, Cl. 320-2.000.

Downing, Beth M.; and Downing, Jamie D., to Downing Investment, L.L.C. Shopping cart having an integrated dual child seat. 5,702,114, Cl. 280-47.230.

Downing Investment, L.L.C.: *See*—

Downing, Beth M.; and Downing, Jamie D., 5,702,114, Cl. 280-47.230.

Downing, Jamie D.: *See*—

Downing, Beth M.; and Downing, Jamie D., 5,702,114, Cl. 280-47.230.

Dr. Ing. h.c.F. Porsche AG: *See*—

Kuebler, Markus; and Hofmann, Peter, 5,702,785, Cl. 428-35.200.

Reuter, Dieter; and Quittenbaum, Jens, 5,702,150, Cl. 296-180.100.

Draftex Industries Limited: *See*—

Perrin, Etienne; and Dony, Dominique, 5,702,091, Cl. 267-64.120.

Drägerwerk Aktiengesellschaft: *See*—

Kiesele, Herbert; Chrzan, Rigobert; and Mett, Frank, 5,702,576, Cl. 204-415.000.

Draper, Greg W.: *See*—

Bieberdorf, John W.; Wisehart, John C.; and Draper, Greg W., 5,703,484, Cl. 324-207.220.

Draxis Health Inc.: *See*—

Simmons, Donald L., 5,702,693, Cl. 424-78.030.

Dreikorn, Sarah J.: *See*—

Morris, Sandra A.; Curotto, James E.; Bills, Gerald F.; Dreikorn, Sarah J.; Streicher, Stanley L.; Zink, Deborah L.; Thompson, John R.; Basilio, Angela; Pelaez, Fernando; Diez, Maria Teresa; and Vicente, Francisca, 5,702,929, Cl. 435-118.000.

Dreiman, Nelik I.; and Kandpal, Tara C., to Tecumseh Products Company. Method of making a refrigeration compressor thrust bearing assembly. 5,701,668, Cl. 29-888.020.

Drumheller, Douglas S., to Sandia Corporation. Acoustic transducer. 5,703,836, Cl. 367-165.000.

Druz, Loren L.: *See*—

Yang, Angel A.; Druz, Loren L.; and Berman, Terry, 5,702,745, Cl. 426-242.000.

Drying Technology: *See*—

Nikolaychik, Victor V.; Burdick, Brent A.; and Nikolaychik, Leonid V., 5,702,715, Cl. 424-402.000.

DSM N.V.: *See*—

Bonte, Geert I. V.; and De Kock, Johannes C. J., 5,702,590, Cl. 208-251.00R.

Twigt, Freddy; and Van Der Linde, Robert, 5,703,198, Cl. 528-303.000.

Du Pont de Nemours, E. I., and Company: *See*—

Blair, Leslie Mitchell, 5,703,185, Cl. 526-247.000.

Duan, Youlu; Dochniak, Michael J.; and Stammler, Sonja, to H.B. Fuller Licensing & Financing, Inc. Aqueous anionic poly (urethane/urea) dispersions. 5,703,158, Cl. 524-840.000.

Duault, Maurice, to International Business Machines Corporation. Method of transferring structured data of constant bit rate traffic in an ATM network. 5,703,878, Cl. 370-395.000.

Dubief, Claude; and Cauwet, Danièle, to L'Oreal. Composition for washing and antidandruff treatment of hair and the scalp, based on selenium sulphide and nonionic surfactant of the polyglycerolated or alkylpolyglycoside type. 5,702,690, Cl. 424-70.100.

Dubose, Jeffery: *See*—

Moore, Michael A.; Griffin, David R.; and Dubose, Jeffery, 5,701,878, Cl. 124-67.000.

DuCharme, Paul Edmund, Jr.: *See*—

Nicholson, Myron Donald; Kajiwara, Edward Makoto; and DuCharme, Paul Edmund, Jr., 5,702,783, Cl. 428-34.800.

Duell, Andreas: *See*—

Kuesell, Matthias; Duell, Andreas; Bender, Karl; and Borchert, Kay, 5,703,282, Cl. 73-115.000.

Dueppen, Daniel G.: *See*—

Gugger, Eric T.; and Dueppen, Daniel G., 5,702,752, Cl. 426-634.000.

Duffy, John A., to Avon Products, Inc. Ascorbic acid compositions for reducing irritation of topically applied active ingredients. 5,703,122, Cl. 514-474.000.

Duffy, John D.: *See*—

Gardner, Cynthia M.; Stone, Robert E.; Duffy, John D.; Allen, William E.; and Schimpf, James E., 5,701,793, Cl. 91-361.000.

Dufrane, Ronald M.: *See*—

Lucca, Frank J.; Sutula, Daniel P., Jr.; Dufrane, Ronald M.; and Gladden, Ernest L., 5,703,320, Cl. 102-275.700.

Duggan, Joseph C.: *See*—

Wu, Gary C.; Pawar, Chandra S.; Leibowitz, Steven H.; Pullin, Edward J.; Hazzard, Michael J.; and Duggan, Joseph C., 5,704,052, Cl. 395-380.000.

Duggan, Robert J.: *See*—

Kamen, Dean L.; Ambrogi, Robert R.; Duggan, Robert J.; Heinzmann, Richard Kurt; Key, Brian R.; Skoskiewicz, Andrzej; and Kristal, Phyllis K., 5,701,965, Cl. 180-7.100.

Duis, James Joseph: *See*—

Caudal, Pierre; Mahe, Guy; Baker, Georgia Anna; and Duis, James Joseph, 5,702,555, Cl. 156-247.000.

Duke, Steven B.: *See*—

Jovanovich, Alan F.; Warren, Bruce G.; Charron, Duane G.; and Duke, Steven B., 5,703,950, Cl. 380-23.000.

Duke University: *See*—

Modrich, Paul L.; Su, Shin-San; Au, Karin G.; Lahue, Robert S.; Cooper, Deani Lee; and Worth, Leroy, Jr., 5,702,894, Cl. 435-6.000.

Düllberg, Gerald; Peusens, Herbert; and Armbruster, Veit, to Deutsche Thomson-Brandt GmbH. High frequency filter circuit. 5,703,545, Cl. 333-202.000.

Dumats, Jacqueline: *See*—

Galey, Jean Baptiste; and Dumats, Jacqueline, 5,703,095, Cl. 514-332.000.

Dundorf, David M. Method and system for producing 3-D carved signs using automatic tool path generation and computer-simulation techniques. 5,703,782, Cl. 364-474.240.

Dunn, Richard L.; and Tipton, Arthur J., to Atrix Laboratories, Inc. Polymeric compositions useful as controlled release implants. 5,702,716, Cl. 424-422.000.

Dunn, William Frank; Maloney, John Michael; Hooper, Michael Lynn; and Maas, Wayne David, to Goodyear Tire & Rubber Company, The. Method for dynamic interference pattern testing. 5,703,680, Cl. 356-35.500.

Dunne, Jeremy G., to Laser Technology, Inc. Self-calibrating precision timing circuit and method for a laser range finder. 5,703,678, Cl. 356-5.050.

DuPont Merck Pharmaceutical Company, The: *See*—

Xue, Chu-Biao; DeGrado, William F.; DeCicco, Carl Peter; and Jacobson, Irina Cipora, 5,703,092, Cl. 514-303.000.

Durametallic Corporation: *See*—

Sedy, Josef, 5,702,110, Cl. 277-96.100.

Duran, John A., to Avibank Mfg., Inc. Non-removable structural fastener assembly. 5,702,214, Cl. 411-5.000.

Durand, Ludovic; Babingui, Jean-Paul; Moulin, Claudie; Robert-Piessard, Sylvie; Le Baut, Guillaume; Scalbert, Elisabeth; Caignard, Daniel-Henri; and Renard, Pierre, to Adir et Compagnie. Use of benzopyran derivatives for the treatment of pathologies associated with the NA^+-independent Cl^-/HCO_3-exchanger. 5,703,118, Cl. 514-456.000.

Durham, Larry: *See*—

O'Brien, Patrick J.; Thomas, Alvin; Rufo, George, Jr.; Durham, Larry; and Gelardi, Anthony L., 5,701,997, Cl. 206-308.100.

Durham Pharmaceuticals LLC: *See*—

Peck, James V.; Minaskanian, Gevork; and Sleevi, Mark C., 5,703,104, Cl. 514-369.000.

Durham, Roger O. Workstand for bicycles. 5,702,006, Cl. 211-18.000.

Durkee, Scott R.: *See*—

Spillman, William B., Jr.; and Durkee, Scott R., 5,703,576, Cl. 340-870.310.

Durkin, Edward B., to United States of America, Air Force. Reluctance generator/motor cooling. 5,703,421, Cl. 310-61.000.

Durlam, Mark: *See*—

Tehrani, Saied N.; Chen, Eugene; Durlam, Mark; and Zhu, Xiaodong T., 5,703,805, Cl. 365-173.000.

Durrance, Debra Hartley: *See*—

Collier, Leslie Warren, IV; Yahiaoui, Ali; Johns, Eric Mitchell; and Durrance, Debra Hartley, 5,702,377, Cl. 604-361.000.

Glaug, Frank Steven; Brunner, Michael Scott; Cochrane, Faith Eileen; Durrance, Debra Hartley; Olson, Christopher Peter; Schleinz, Robert Joseph; and Thiessen, Richard Harry, 5,702,376, Cl. 604-361.000.

Durvaux, Marc Marie Ghislain; and Cassiers, Raphael Paul Claude, to Alcatel N.V. Digital radio receiver. 5,703,910, Cl. 375-322.000.

Dutton, Christopher J.; Gibson, Stephen P.; and Lee, Shih-Jen E., to Pfizer Inc. Process for preparing antiparasitic agents. 5,702,924, Cl. 435-78.000.

Duvall, William Robert, Jr., to LoJack Corporation. Method of and apparatus for motor vehicle security assurance employing voice recognition control of vehicle operation. 5,704,008, Cl. 395-2.820.

Dymax Corporation: *See*—

Cantor, Stephen E.; and Levine, Leon, 5,703,138, Cl. 522-29.000.

Dynaflair Corporation: *See*—

Pasternak, Gerald S., 5,701,941, Cl. 160-199.000.

Dynan, Stephen; Shindle, Jack; and Vayda, John, to Saint-Gobain/Norton Industrial Ceramics Corp. Process for making crack-free silicon carbide diffusion components. 5,702,997, Cl. 501-88.000.

Dynatex International: *See*—

Elsbree, Charles N., 5,702,492, Cl. 51-307.000.

Dziabo, Anthony J.: *See*—

Park, John Y.; Peng, Lin; and Dziabo, Anthony J., 5,703,024, Cl. 510-100.000.

E. Khashoggi Industries: *See*—

Andersen, Per Just; and Hodson, Simon K., 5,702,787, Cl. 428-36.400.

E-Systems, Inc.: *See*—

Fluegel, Kyle G., 5,702,073, Cl. 244-57.000.

Waid, James D., 5,702,070, Cl. 244-183.000.

Early, Paul Timothy: *See*—

Richardson, Alan David; Early, Paul Timothy; Brown, Larry Thomas; Ortmann, Walter Joseph; and Bos, Edward Albert, 5,701,869, Cl. 123-497.000.

Eastman Chemical Company: *See*—

Krutak, James J.; Cushman, Michael R.; Coates, Clarence A.; Parham, William W.; Weaver, Max A.; and Patonay, Gabor, 5,703,229, Cl. 540-140.000.

Eastman Kodak Company: *See*—

Bietry, Joseph R.; Estelle, Lee R.; and Ludington, Paul D., 5,703,721, Cl. 359-646.000.

Finnicum, Douglas Scott; Finucane, Lawrence J.; Peters, Jack Duane; and Le, Son Minh, 5,702,524, Cl. 118-200.000.

Fyson, John Richard; and Evans, Gareth Bryn, 5,702,874, Cl. 430-373.000.

Griffith, John D., 5,703,726, Cl. 359-753.000.

Jarrold, Gregory S.; Chatterjee, Dilip K.; and Ghosh, Syamal K., 5,702,766, Cl. 427-376.100.

Malley, Michael Timothy, 5,703,609, Cl. 345-56.000.

May, John W.; Tombs, Thomas N.; and Tyagi, Dinesh, 5,702,852, Cl. 430-47.000.

Meyers, Mark M., 5,703,351, Cl. 250-201.200.

Opitz, Robert John; and Zawadzki, Silvia, 5,702,875, Cl. 430-492.000.
Simons, Michael John, 5,702,865, Cl. 430-264.000.
Stevens, Eric G., 5,702,971, Cl. 437-53.000.
Stevens, Eric Gordon, 5,703,642, Cl. 348-317.000.
Tixier, Jean-Pierre; and Legrand, Annie Francoise Armande, 5,702,809, Cl. 428-216.000.
Twist, Peter Jeffery, 5,702,873, Cl. 430-373.000.
Wan, Shijie J., 5,704,026, Cl. 395-131.000.
Wilson, John C.; and Alexandrovich, Peter S., 5,703,265, Cl. 558-390.000.
Eastman, Richard E.: *See—*
Bakowski, Richard A.; and Eastman, Richard E., 5,702,321, Cl. 475-199.000.
Eaton Corporation: *See—*
Buffet, Jean Claude; and Raut, Lionel, 5,703,552, Cl. 335-205.000.
Chen, Jiong; and Benveniste, Victor M., 5,703,375, Cl. 250-492.210.
Horsky, Thomas N.; Reynolds, William E.; and Cloutier, Richard M., 5,703,372, Cl. 250-423.00R.
Whitlow, Graham A.; Gungor, Mehmet N.; and Lovic, William R., 5,701,993, Cl. 200-264.000.
Ebara Corporation: *See—*
Fujimura, Hiroyuki; Suzuki, Takayuki; Yamada, Norio; Ichiki, Yoshiyuki; Maezawa, Akihiko; and Hayashi, Hideo, 5,702,572, Cl. 204-157.150.
Fukao, Tadashi; Chiba, Akira; and Michioka, Chikara, 5,703,423, Cl. 310-90.500.
Kaji, Naruhiko; Nakano, Yutaka; Nakata, Rempei; Harada, Minoru; Shinjo, Ryoichi; and Tsujimura, Manabu, 5,702,673, Cl. 422-186.070.
Ebata, Michio: *See—*
Sagawa, Akemi; Sakai, Masahiko; Ebata, Michio; and Itoh, Ren, 5,703,145, Cl. 523-161.000.
Ebata, Shuji: *See—*
Abe, Mariko; Ebata, Shuji; Abe, Takafumi; and Higuchi, Hirofumi, 5,703,272, Cl. 560-231.000.
Eberle, Frederick P.; and Jolliff, Norman E., to Tecumseh Products Company. Mechanical disconnect for variable speed hydrostatic transmission. 5,701,738, Cl. 60-435.000.
Eberlein, Ernst: *See—*
Herre, Jurgen; Seitzer, Dieter; Brandenburg, Karl-Heinz; and Eberlein, Ernst, 5,703,999, Cl. 395-2.120.
Eberlin, René. Device for microanatomosis of blood vessels. 5,702,048, Cl. 227-177.100.
Ebner, Jerry R.: *See—*
Stern, Michael K.; Cheng, Brian K.; Ebner, Jerry R.; and Riley, Dennis P., 5,703,273, Cl. 562-16.000.
Eby, William T.: *See—*
Abe, Dennis F., Jr., 5,703,563, Cl. 340-426.000.
Echelon Corporation: *See—*
Sutterlin, Philip H.; Stewart, J. Marcus; and Hurlbut, Amy O., 5,703,766, Cl. 363-35.000.
Eckels, Phillip William; and Woods, Daniel C., to General Electric Company. Configured indium gasket for thermal joint in cryocooler. 5,701,742, Cl. 62-6.000.
Eckels, Phillip William; Sato, Kazuhiko; Woods, Daniel Christian; Ward, Granville Geer; Hayworth, Gregory Farin; and King, Christopher G., to General Electric company. Magnetic resonance imager with helium recondensing. 5,701,744, Cl. 62-47.100.
Ecker, Robert M.; McClure, Lawrence C.; and Wahlstrand, John D., to Medtronic, Inc. Verification of capture using pressure waves transmitted through a pacing lead. 5,702,427, Cl. 607-28.000.
Eckhardt, Reiner: *See—*
Stoll, Alfred; Gulitz, Wolfgang; Tessari, Hans; and Eckhardt, Reiner, 5,702,068, Cl. 244-3.160.
Eckman, Charles M., to Energy Convertors, Inc. Hot water tank assembly. 5,703,998, Cl. 392-340.000.
Eckstein, James N.; Riaziat, Majid L.; and Virshup, Gary F., to Varian Associates, Inc. Spectral modification through phase modulation with spatial extent. 5,703,706, Cl. 359-125.000.
Eckstrom, William Bernard: *See—*
Cusumano, Joseph Victor; Diana, William Daniel; Emert, Jacob; Gorda, Keith Raymond; Schlosberg, Richard H.; Young, David A.; Yezrielev, Albert I.; Eckstrom, William Bernard; Manry, Edris Eileen; and Keenan, Michael John, 5,703,256, Cl. 554-224.000.
Eclipse Surgical Technologies, Inc.: *See—*
Owyang, Zachary E., 5,703,985, Cl. 385-117.000.
Ed Tobergte Associates, Inc.: *See—*
Rector, James L.; and Tobergte, Edward H., 5,701,611, Cl. 2-455.000.
Eda, Takanori: *See—*
Tsuru, Yasutaka; Okamura, Takumi; Kimura, Shoji; Yamamoto, Yuji; Murata, Toshinori; Katsumata, Kenji; Akiyama, Moriyoshi; and Eda, Takanori, 5,703,658, Cl. 348-554.000.
Edge Development, Inc.: *See—*
Brocious, George Dale; Smith, Clifford Wayne; and Snyder, Wayne Carl, 5,701,693, Cl. 37-381.000.
Edgman, Thomas J., to Vinylex Corporation. Snap together plastic fence. 5,702,090, Cl. 256-19.000.
Edlund, Dag, to Aktiebolaget Electrolux. Compression release valve for a combustion engine. 5,701,859, Cl. 123-182.100.
Edrich, Richard A.: *See—*
Forrestal, Lloyd; Voorhees, Marc; Chen, Yung-Ming; and Edrich, Richard A., 5,702,823, Cl. 458-450.000.
Edwards, Harry W.: *See—*
Schmidt, Karl M.; Jenkins, Stuart E.; and Edwards, Harry W., 5,701,687, Cl. 36-29.000.
Edwards, Thomas R.: *See—*
Devitt, John W.; Edwards, Thomas R.; and Bantel, Thomas E., 5,703,362, Cl. 250-341.800.
Effing, Jochem; Gruhlke, Eberhard; Godbey, Kristin; and Welsing, Wolfgang, to Minnesota Mining and Manufacturing Company. Transdermal device for the delivery of flurbiprofen. 5,702,720, Cl. 424-448.000.
Egan, Dennis M.: *See—*
Fishback, Gary M.; Egan, Dennis M.; and Stelmar, Hilary, 5,702,199, Cl. 404-17.000.
Eglit, Alexander Julian, to Cirrus Logic, Inc. Method and apparatus for upscaling video images when pixel data used for upscaling a source video image are unavailable. 5,703,618, Cl. 345-112.000.
Egusa, Yo: *See—*
Mori, Tsutomu; Fujimoto, Makoto; Goto, Yukie; and Egusa, Yo, 5,703,644, Cl. 348-363.000.
EH-Schrack Components Aktiengesellschaft: *See—*
Polgar, Tibor; and Mikl, Rudolf, 5,703,554, Cl. 335-229.000.
Ehlers, Jeffery C.: *See—*
Thomas, Christopher P.; McCombie, Jay C.; Weber, Gregory T.; Ehlers, Jeffery C.; and Soltis, Dennis A., 5,701,865, Cl. 123-339.110.
Ehrenreich, John M.: *See—*
Dahan, Michael; and Ehrenreich, John M., 5,703,981, Cl. 385-78.000.
Ehret, Aloyse, to Agrano AG. Process for preparing a biomass on a cereal medium, use of the products so prepared and panification ferment. 5,702,943, Cl. 435-253.600.
Ehret, Philippe; Guipouy, Philippe; and Lahtenkorva, Kimmo, to Fiberweb France. Laminated nonwoven webs derived from polymers of lactic acid and process for producing. 5,702,826, Cl. 428-515.000.
Ehs, Eugen. Drying-agent receptacle for an air-conditioning system. 5,702,023, Cl. 220-582.000.
Eid, Bernard A.: *See—*
Bocko, Peter L.; Eid, Bernard A.; Johnson, Ronald E.; Lock, William E.; Shoup, Robert D.; and Themont, Jean-Pierre, 5,701,815, Cl. 101-211.000.
Eidgenoessische Technische Hochschule Laboratorium Fuer Verbrennungsmotoren Und Verbrennungstechnik: *See—*
Schneider, Wolfgang, 5,701,873, Cl. 123-516.000.
Eisele, John F.; Mikelsons, Valdis; Lehman, Gaye K.; Wang, Paul J.; and Brandt, Patricia J. A., to Minnesota Mining and Manufacturing Company. Electrostatic color imaging paper with an intrinsic release dielectric layer. 5,702,803, Cl. 428-195.000.
Eisele, Ulrich: *See—*
Dietz, Hermann; Gruenwald, Werner; De La Prieta, Claudio; Lindemann, Gert; Eisele, Ulrich; and Schmiedel, Carmen, 5,702,580, Cl. 204-426.000.
Ekeze, Tobias E.; and Kerschner, JoAnne Hansen, to Johnson & Johnson Clinical Diagnostics, Inc. Whole blood sample preparation for polymerase chain reaction using ammonium chloride and a carboxylic acid or metal carboxylate for selective red blood cell lysis. 5,702,884, Cl. 435-5.000.
ELA Medical S.A.: *See—*
Legay, Thierry; Bonnet, Jean-Luc; and Geroux, Laurence, 5,702,424, Cl. 607-9.000.
Pons, Pascal; and Molin, Renzo Dal, 5,702,426, Cl. 607-27.000.
Eldim: *See—*
Leroux, Thierry, 5,703,686, Cl. 356-418.000.
Eldredge, John: *See—*
Collins, Mark L.; Blomquist, Cecile; Lombardo, Massimo; and Eldredge, John, 5,702,896, Cl. 435-6.000.
Electra Form, Inc.: *See—*
Hartman, Daniel A.; Bright, Timothy L.; and Shroder, Terry A., 5,702,734, Cl. 425-534.000.
Electric Boat Corporation: *See—*
Larson, Carl O., Jr.; Smith, James S.; Chapman, John H.; Slimon, Scot A.; John, Trahan D.; Robert, J. Brozek; Franco, Alberto; McGarvey, John J.; Rosen, Marvin E.; and Pasque, Michael K., 5,702,430, Cl. 607-1.000.
Electric Power Research Insitute, Inc.: *See—*
Ocken, Howard; Findlan, Shane J.; and Phillips, Michael K., 5,702,668, Cl. 420-57.000.
Electric Power Research Institute, Inc.: *See—*
Stacey, Eric J., 5,703,767, Cl. 363-40.000.
Electricite de France-Service National: *See—*
Bernard, Patrick; and Atton, Jean-Pierre, 5,703,483, Cl. 324-173.000.
ElectroCom Automation, L.P.: *See—*
Allen, Ronald L.; Bishop-Jones, Brenda J.; Cykana, Michael J.; Lui, Eddie K.; and Sipe, Stanley Wayne, 5,703,783, Cl. 364-478.010.
Electroglas, Inc.: *See—*
Hennessey, A. Kathleen; Lin, YouLing; Hastings, Howard V., III; Lovelace, Jerome R.; and Chang, Ning San, 5,703,969, Cl. 382-276.000.
Electrolux S.A.R.L.: *See—*
Desgrandchamps, Francois; Eugene, Michel; Girrens, Nico; Muller, Fernand; and Spaniol, Sylvia, 5,701,746, Cl. 62-62.000.
Electronic Lighting Incorporated: *See—*
Notohamiprodjo, Hubertus; and Kukiatsakulchai, Kata, 5,703,442, Cl. 315-307.000.
Electronic Retailing Systems International Inc.: *See—*
Briechle, George T., 5,704,049, Cl. 395-326.000.
Electronics and Telecommunications Research Institute: *See—*

Jung, Hee Young; Lee, Bhum Cheol; and Park, Kwon Chul, 5,703,882, Cl. 370-474.000.
Yoon, Hyung-Sup; Lee, Jin-Hee; Park, Chul-Sun; and Pyun, Kwang-Eui, 5,702,975, Cl. 437-61.000.
Electronics, Incorporated: *See—*
Champaigne, Jack M., 5,702,289, Cl. 451-38.000.
Elementrix Technologies Ltd.: *See—*
Yanovsky, Eli, 5,703,948, Cl. 380-21.000.
Elf Atochem Deutschland GmbH: *See—*
Steenblock, Roland Eugen; Kock, Norbert Franz; and Fiedler, Detlef Herbert, 5,703,161, Cl. 525-66.000.
Eli Lilly and Company: *See—*
Bunnell, Charles A.; Hotten, Terrence Michael; Larsen, Samuel D.; and Tupper, David Edward, 5,703,232, Cl. 540-557.000.
Foreman, Mark M.; and Leander, J. David, 5,703,112, Cl. 514-411.000.
Zwickl, Craig M., 5,702,937, Cl. 435-212.000.
Elin Energieanwendung Gesellschaft M.B.H.: *See—*
Tomazic, Gerd, 5,702,842, Cl. 429-105.000.
Elison, Martina: *See—*
Herrmann, Wolfgang A.; Fischer, Jakob; Elison, Martina; and Köcher, Christian, 5,703,269, Cl. 560-19.000.
Elkind, Jules. Collector/carrier for animal excrement. 5,702,138, Cl. 294-1.400.
Elliott, Scott: *See—*
Lackey, Jennifer J.; Pothier, Albert J.; Carls, Thomas A.; Johnson, Chris E.; and Elliott, Scott, 5,702,464, Cl. 623-20.000.
Ellis, Anthony E., to United Kingdom of Great Britain and Northern Ireland, The Secretary of State for Scotland in Her Britannic Majesty's Government of the. Salmonicida iron regulated protein and lipopolysaccharide vaccine. 5,702,708, Cl. 424-261.100.
Ellis, Wayne Frederick: *See—*
Douse, David Elson; Ellis, Wayne Frederick; and Hedberg, Erik Leigh, 5,703,823, Cl. 365-222.000.
Elmore, Robert Bradley: *See—*
Phillips, Stephen Allan, II; Myers, Jeffery Edward; and Elmore, Robert Bradley, 5,701,999, Cl. 206-320.000.
Elmwood Sensors, Inc.: *See—*
Short, Stephen P.; and Lichtman, Philip R., 5,703,560, Cl. 337-348.000.
Elpatronic AG: *See—*
Gysi, Peter, 5,703,300, Cl. 73-863.910.
Elsbree, Charles N., to Dynatex International. Semiconductor wafer hubbed saw blade and process for manufacture of semiconductor wafer hubbed saw blade. 5,702,492, Cl. 51-307.000.
Emerson Electric Co.: *See—*
Cox, Karmen D., 5,703,456, Cl. 318-701.000.
Emert, Jacob: *See—*
Cusumano, Joseph Victor; Diana, William Daniel; Emert, Jacob; Gorda, Keith Raymond; Schlosberg, Richard H.; Young, David A.; Yezrielev, Albert I.; Eckstrom, William Bernard; Manry, Edris Eileen; and Keenan, Michael John, 5,703,256, Cl. 554-224.000.
Emmerich, Kurt; and Hein, Herbert, to Vacuumschmelze GmbH. Plate packet for magnet cores for use in inductive components having a longitudinal opening. 5,703,559, Cl. 336-234.000.
Emmons, Ardath H. Method and system for tracking stolen property. 5,703,598, Cl. 342-357.000.
Emory University: *See—*
Schinazi, Raymond F.; and Liotta, Dennis C., 5,703,058, Cl. 514-45.000.
Ems-Inventa AG: *See—*
Hoff, Heinz, 5,703,177, Cl. 525-411.000.
Kaegi, Werner; Stibal, Werner; Schaech, Gunther; Straub, Rainer; and Schmidt, Gerhard, 5,701,644, Cl. 28-220.000.
Emson, Inc.: *See—*
Meshberg, Emil; Miller, Philip; and Schultz, Robert, 5,702,031, Cl. 222-1.000.
Emulsion Technology, Inc.: *See—*
Weete, John D.; and Griffith, George L., 5,703,255, Cl. 554-83.000.
Enami Seiki Mfg. Co., Ltd.: *See—*
Enami, Toshiaki, 5,702,733, Cl. 425-183.000.
Enami, Toshiaki, to Enami Seiki Mfg. Co., Ltd. Press working machine. 5,702,733, Cl. 425-183.000.
Endermann, Rainer: *See—*
Petersen, Uwe; Ruther, Michael; Schenke, Thomas; Bremm, Klaus Dieter; and Endermann, Rainer, 5,703,094, Cl. 514-312.000.
Endo, Kazuhiko, to NBC Corporation. Method for preparing a fluoro-containing polyimide film. 5,702,773, Cl. 427-573.000.
Endo, Mitsuyoshi; Asai, Hironori; Yano, Keiichi; and Sato, Yoshitoshi. Semiconductor package having an aluminum nitride substrate. 5,703,397, Cl. 257-701.000.
Endo, Seiichiro: *See—*
Horiuchi, Kuniyasu; Endo, Seiichiro; Moriyama, Keiji; and Yokota, Masatoshi, 5,702,312, Cl. 473-377.000.
Endo, Takayoshi; Ishizaki, Kazuhisa; Yamada, Satoshi; and Hamaguchi, Takeyuki, to Yazaki Corporation. Connector for electric car. 5,702,264, Cl. 439-346.000.
Endrös, Arthur; and Martinelli, Giuliano, to Siemens Solar GmbH. Silicon semiconductor wafer solar cell and process for producing said wafer. 5,702,538, Cl. 136-258.000.
Enel S.p.A.: *See—*
Perini, Umberto; Martinelli, Paolo; Golinelli, Elena; Musazzi, Sergio; Trespidi, Franco; and Pintus, Nice, 5,703,690, Cl. 356-436.000.
Energaire Corporation: *See—*
Schmidt, Karl M.; Jenkins, Stuart E.; and Edwards, Harry W., 5,701,687, Cl. 36-29.000.
Energy Convertors, Inc.: *See—*
Eckman, Charles M., 5,703,998, Cl. 392-340.000.
Enga, John M.: *See—*
Thiessen, Jeffrey S.; Enga, John M.; and Gonzalez, Hector F., 5,703,742, Cl. 360-132.000.
Engdahl, Per: *See—*
Lindberg, Caroline; and Engdahl, Per, 5,703,304, Cl. 75-243.000.
Engel, Peter H. Magnetic book and method of forming same. 5,702,126, Cl. 281-29.000.
Enger, Michael P.: *See—*
Larson, Richard I.; Selby, Stephen E.; and Enger, Michael P., 5,702,676, Cl. 423-261.000.
Engle, Joseph D., to JJI Lighting Group, Inc. Modular connector device. 5,702,176, Cl. 362-219.000.
English, George J.: *See—*
Sidwell, Steven C.; English, George J.; Garrison, Robert L.; and Johnson, Ralph J., 5,702,179, Cl. 362-255.000.
Enomoto, Masahiro, to Daifuku Co., Ltd. Sorting equipment. 5,701,992, Cl. 198-370.060.
Ensign-Bickford Company, The: *See—*
Fritz, James E.; Tseka, Thomas C.; and Sutula, Daniel P., Jr., 5,703,319, Cl. 102-275.700.
Lucca, Frank J.; Sutula, Daniel P., Jr.; Dufrane, Ronald M.; and Gladden, Ernest L., 5,703,320, Cl. 102-275.700.
Entrup, Hubert Grosse: *See—*
Adamek, Wolfgang; Kretschmer, Horst; Entrup, Hubert Grosse; Nienhaus, Clemens; Herchenbach, Paul; Sarfert, Andreas; Kämpf, Klaus; and Schott, Wilhelm, 5,702,306, Cl. 464-172.000.
Enviroderm Pharmaceuticals, Inc.: *See—*
Schulz, Anthony A.; and Buddrus, David J., 5,702,709, Cl. 424-401.000.
EP Technologies, Inc.: *See—*
Stern, Roger A.; Panescu, Dorin; and Swanson, David K., 5,702,386, Cl. 606-34.000.
Epshtein, Alexandr Lvovich: *See—*
Korzhenkov, Petr Nikolaevich; Pyait, Jury Leonidovich; Smagin, Alexandr Semenovich; and Epshtein, Alexandr Lvovich, 5,703,603, Cl. 343-753.000.
Erath, Herbert; and Blaese, Armin. Drilling device for producing drilled holes with an undercut. 5,702,212, Cl. 408-153.000.
Erickson, Luther E.: *See—*
Seaver, Albert E.; Scheel, Lyle N.; Erickson, Luther E.; and Danielson, Daniel R., 5,702,527, Cl. 118-410.000.
Ericsson Inc.: *See—*
Hays III, William Witherspoon, 5,703,544, Cl. 333-185.000.
Snyder, Thomas D.; and Wakefield, I. Nelson, 5,703,758, Cl. 361-752.000.
Erilli, Rita; Gallant, Chantal; and Lysy, Regis, to Colgate-Palmolive Co. Liquid crystal detergent compositions based on anionic sulfonate-ether sulfate mixtures. 5,703,028, Cl. 510-236.000.
Ernoult, Jacques: *See—*
Paidassi, Serge; Ernoult, Jacques; Brun, Michel; Monge-Cadet, Pierre; Pauleau, Yves; and Farges, Guy, 5,702,829, Cl. 428-610.000.
Erwin, Robert L.: *See—*
Berliner, David L.; Erwin, Robert L.; and McGee, David R., 5,703,051, Cl. 514-21.000.
Esaki, Toshiro; and Kubota, Masayuki, to Fuji Photo Film Co., Ltd. Apparatus for assembling photographic film cassette. 5,701,663, Cl. 29-783.000.
Esch, Brady, to Localmed, Inc. Guide catheter with sensing element. 5,701,905, Cl. 128-673.000.
Escher, Claus; Harada, Takamasa; Illian, Gerhard; Röech, Norbert; and Wingen, Rainer, to Hoechst Aktiengesellschaft. Use of complex ligands for ions in ferroelectric liquid-crystal mixtures. 5,702,639, Cl. 252-299.000.
Eshuis, Gerbrand: *See—*
Martin, Wallace Anthony; van der Meulen, Wybren; Menezes, Edgar V.; Renkema, Kornelis; Phillips, Robert B.; Lust, Victor; Wu, Jongliang; and Eshuis, Gerbrand, 5,702,735, Cl. 425-548.000.
ESKA Medical GmbH & Co.: *See—*
Grundei, Hans; Rudigier, Jürgen; and Weber, Christian, 5,702,471, Cl. 623-21.000.
Eslambolchi, Hossein. Method for monitoring fiber optic cable. 5,703,682, Cl. 356-73.100.
Essig, Richard C., to Bestop, Inc. Tailgate sealing arrangement. 5,702,147, Cl. 296-106.000.
Essilor International (Compagnie Generale d'Optique): *See—*
Keita, Gabriel; Renaudineau, Joel; and Yean, Leanirith, 5,702,825, Cl. 428-500.000.
Estelle, Lee R.: *See—*
Bietry, Joseph R.; Estelle, Lee R.; and Ludington, Paul D., 5,703,721, Cl. 359-646.000.
Estep, John M.: *See—*
Warner, Donald R.; McCallops, John A.; and Estep, John M., 5,701,961, Cl. 173-15.000.
Eszenyi, Tibor; Sebök, Péter; Frank, László; Papp, Gyula; Timár, Tibor; and Bartik, Tamás, to Alkaloida Vegyeszeti Gyar. Benzopyran derivatives. 5,703,113, Cl. 514-422.000.
Etchu, Masami: *See—*
Hosoi, Masahiro; Saito, Yasuhiko; Saeki, Yasuhiro; and Etchu, Masami, 5,702,794, Cl. 428-65.300.
Ethicon Endo-Surgery, Inc.: *See—*

Austin, Charles E.; Dafforn, Kenneth R.; and McElhenney, Jay J., 5,702,390, Cl. 606-48.000.
Wales, Kenneth S.; Paraschac, Joseph F.; and Stefanchik, David, 5,702,408, Cl. 606-139.000.
Ethicon, Inc.: *See—*
Bezwada, Rao S.; Arnold, Steven C.; and Ace, Constance, 5,703,200, Cl. 528-354.000.
Smith, Daniel; Willis, Bernard M.; Marschke, Kenneth P., Jr.; Littlewood, Barry; Schoen, Vulgens; Gucker, Carl; Nordmeyer, Michael; and Miklewicz, Thaddeus, 5,701,656, Cl. 29-558.000.
Ethington, Bryan Leslie; Gostomski, John Francis; Minnick, Jeffrey Alan; and Songer, Christopher Mark, to Lexmark International, Inc. Printer with high bandwidth compression architecture. 5,704,022, Cl. 395-115.000.
Ethyl Corporation: *See—*
Srinivasan, Sanjay, 5,703,023, Cl. 508-468.000.
Etron Technology, Inc.: *See—*
Ting, Tah-Kang Joseph; Hsieh, Ching-Chih; and Rong, Bor-Doou, 5,703,832, Cl. 365-233.000.
Euchner & Co.: *See—*
Rapp, Werner; and Schmidt, Peter, 5,703,339, Cl. 200-17.00R.
Eugene, Michel: *See—*
Desgrandchamps, Francois; Eugene, Michel; Girens, Nico; Muller, Fernand; and Spaniol, Sylvia, 5,701,746, Cl. 62-62.000.
Eurocopter France: *See—*
Lenzi, Serge Claude, 5,702,171, Cl. 362-29.000.
Euteneuer, Charles L.; Mattison, Richard C.; Adams, Daniel O.; Hektner, Thomas R.; and Keith, Peter T. Fixed-wire dilatation balloon catheter. 5,702,364, Cl. 604-96.000.
Euteneuer, Charles L.: *See—*
Keith, Peter T.; and Euteneuer, Charles L., 5,702,439, Cl. 604-96.000.
Evain, Eric J., to Montell North America Inc. Thermal bondable fiber. 5,702,815, Cl. 428-364.000.
Evans, Brian: *See—*
Armour, Duncan Robert; Evans, Brian; Middlemiss, David; Naylor, Alan; Pegg, Neil Anthony; Vinader, Maria Victoria; Giblin, Gerard Martin Paul; Hubbard, Tania; Hann, Michael Meirteith; Lewell, Xiao-Qing; and Watson, Stephen Paul, 5,703,240, Cl. 546-210.000.
Evans, Edward Kelley; and West, Roderick Michael Peters, to International Business Machines Corporation. Method for identifying video pixel data format in a mixed format data stream. 5,703,622, Cl. 345-154.000.
Evans, Gareth Bryn: *See—*
Fyson, John Richard; and Evans, Gareth Bryn, 5,702,874, Cl. 430-373.000.
Evans, Nigel; Hewlett, William E.; and Parker, Richard, to Light & Sound Design Ltd. Lamp-holding book clamp. 5,702,082, Cl. 248-230.100.
Evans, Ronald M.; and Ogura, Toshihiko, to Salk Institute for Biological Studies, The. Use of reporter genes for retinoid receptor screening assays having novel retinoid-associated response elements. 5,702,914, Cl. 435-[illegible].
Evans, Scott; Perl, John, II; and Greff, Richard, to Micro Therapeutics, Inc. Method for embolizing blood vessels. 5,702,361, Cl. 604-53.000.
Evans, Steven L.; Harvey, John; and Tsujino, Yasuko, to Mycogen Corporation. Herbicidally-Active fatty acid allphatic amine salts. 5,703,019, Cl. 504-320.000.
Evans, Steven L.: *See—*
Caulder, Jerry; Crowley, R. Hugh; Zorner, Paul S.; and Evans, Steven L., 5,703,011, Cl. 504-130.000.
Caulder, Jerry; Crowley, R. Hugh; Zorner, Paul S.; and Evans, Steven L., 5,703,012, Cl. 504-130.000.
Caulder, Jerry; Crowley, R. Hugh; Zorner, Paul S.; and Evans, Steven L., 5,703,013, Cl. 504-131.000.
Caulder, Jerry; Crowley, R. Hugh; Zorner, Paul S.; and Evans, Steven L., 5,703,014, Cl. 504-142.000.
Evans, Wayne E.; and Mesters, Carolus Matthias Anna Maria, to Shell Oil Company. Ethylene oxide catalyst and process. 5,703,253, Cl. 549-536.000.
Eventoff, Franklin N.: *See—*
Mohrbacher, Bernard, 5,703,309, Cl. 84-609.000.
Everetts, Charles Clinton: *See—*
Everetts, Randy Roger; and Everetts, Charles Clinton, 5,702,493, Cl. 55-356.000.
Everetts, Randy Roger; and Everetts, Charles Clinton. Welding fume funnel with magnetic coupling means. 5,702,493, Cl. 55-356.000.
Exar Corporation: *See—*
Chen, Xiaole, 5,703,524, Cl. 327-560.000.
Excellon Automation Company: *See—*
Polacek, Richard; and Popovich, Dan, 5,702,213, Cl. 409-218.000.
Exco Technologies, Ltd.: *See—*
Bishenden, Warren J., 5,701,947, Cl. 164-341.000.
Exxon Chemical Patents Inc: *See—*
Colclough, Terence; Skinner, Philip; Woollins, John Derek; and Wood, Paul Thomas, 5,703,262, Cl. 558-112.000.
Struglinski, Mark Joseph; VerStrate, Gary William; and Fetters, Lewis J., 5,703,171, Cl. 525-314.000.
Exxon Chemical Patents Inc.: *See—*
Cusumano, Joseph Victor; Diana, William Daniel; Ebert, Jacob; Gorda, Keith Raymond; Schlosberg, Richard H.; Young, David A.; Yezrielev, Albert I.; Eckstrom, William Bernard; Manry, Edris Eileen; and Keenan, Michael John, 5,703,256, Cl. 554-224.000.
Shaffer, Timothy Daniel, 5,703,183, Cl. 526-189.000.
Exxon Research and Engineering Company: *See—*
Vanderspurt, Thomas Henry; and Koveal, Russell John, 5,703,133, Cl. 518-707.000.
Eyre, David R., to Washington Research Foundation. Methods of detecting collagen type II degradation in vivo. 5,702,909, Cl. 435-7.900.
Ezra, David; Woodgate, Graham John; Harrold, Jonathan; and Omar, Basil Arthur, to Sharp Kabushiki Kaisha. Three-dimensional projection display apparatus. 5,703,717, Cl. 359-462.000.
Fabio, David G.: *See—*
Johnson, Todd W.; and Fabio, David G., 5,702,603, Cl. 210-493.100.
FAG OEM und Handel AG: *See—*
Weigand, Michael; Ganss, Werner; and Grehn, Martin, 5,702,187, Cl. 384-551.000.
Faiola, Norman A.; and Crase, Christopher J., to Syracuse University. Automatic rapid chilling system. 5,701,747, Cl. 68-63.000.
Falk, Nancy: *See—*
Bae-Lee, Myongsuk; Falk, Nancy; and Vasudevan, Tirucherai Varahan, 5,703,032, Cl. 510-320.000.
Family Health International: *See—*
Wilson, Thomas W., III, 5,701,915, Cl. 128-842.000.
Fang, Yi; Carralero, Cesar; and McEwen, Mark, to Motorola, Inc. Programmable voltage controlled attenuator. 5,703,909, Cl. 375-295.000.
Fann Instrument Company: *See—*
Murphy, Robert J., Jr.; and Anderson, James G., 5,703,278, Cl. 73-30.010.
Farges, Guy: *See—*
Paidassi, Serge; Ernoult, Jacques; Brun, Michel; Monge-Cadet, Pierre; Pauleau, Yves; and Farges, Guy, 5,702,829, Cl. 428-610.000.
Farid, Hany: *See—*
Simoncelli, Eero; and Farid, Hany, 5,703,677, Cl. 356-4.040.
Farkas, David Michael; and Lutz, Daniel Reese, to General Electric Company. Modified notched energy filter neutron radiography camera for non-destructive determination of hydrogen content of irradiated BWR fuel elements. 5,703,371, Cl. 250-390.020.
Farrar, David John: *See—*
Buck, Keith Evan; Farrar, David John; Harvey, Robert Joseph; Litwak, Philip; and Rueff, John Robert, 5,701,919, Cl. 128-898.000.
Farrell, Kevin: *See—*
Mammone, Richard J.; Farrell, Kevin; and Freeman, Brian, 5,703,908, Cl. 375-278.000.
Farrier, Michael G.; Kamasz, Stacy R.; Ma, Fred S. F.; and Bendett, Mark P., to Dalsa, Inc.; and Imra America, Inc. Charge coupled device pulse discriminator. 5,703,639, Cl. 348-241.000.
Farris, Mark S.; Harrison, Michael A.; Loftus, John M.; Taylor, Aaron K.; Mack, Christoph E.; and Collins, Ross P., to Cannondale Corporation. Suspension assembly for a vehicle. 5,702,092, Cl. 267-64.150.
Farwell, William D., to Hughes Electronics. Series connection of multiple digital devices to a single power source. 5,703,790, Cl. 364-492.000.
Fasino, Victor. Bird feeder. 5,701,841, Cl. 119-52.200.
Fassina, Andrea: *See—*
Nebuloni, Daniela; and Fassina, Andrea, 5,703,528, Cl. 330-51.000.
Father, Richard M.; and Ross, Bruce Douglas, to NACRE. Kit with toothbrush and toothpaste coordinated that end of working lives occur concurrently. 5,701,921, Cl. 132-309.000.
Faulkner, Russell W.: *See—*
Hall, Malcolm G.; and Faulkner, Russell W., 5,703,623, Cl. 345-158.000.
Faulstich, Helmut: *See—*
Ullmann, Roland; and Faulstich, Helmut, 5,701,673, Cl. 30-34.100.
Fazan, Pierre C.: *See—*
Mathews, Viju K.; Fazan, Pierre C.; and Jeng, Nanseng, 5,702,986, Cl. 438-163.000.
Feierlein, Johannes; and Rieger, Ulrich, to Daimler-Benz Aerospace AG. Device for locating artillery and sniper positions. 5,703,321, Cl. 102-427.000.
Feldsein, Thomas M.: *See—*
Peter, Frederick H., Jr.; Bell, Eric; and Feldsein, Thomas M., 5,702,606, Cl. 210-646.000.
Feldstein, Nathan, to Surface Technology, Inc. Selective codeposition of particulate matter and composite plated articles thereof. 5,702,763, Cl. 427-241.000.
Felgner, Philip L.; Wolff, Jon Asher; Rhodes, Gary H.; Malone, Robert Wallace; and Carson, Dennis A., to Wisconsin Alumni Research Foundation; and Vical Incorporated. Generation of antibodies through lipid mediated DNA delivery. 5,703,055, Cl. 514-44.000.
Fels, Peter; Wüstenhagen, Ulf; and Steinke, Gerhard, to Deutsche Telekom AG. Method and apparatus for multichannel sound reproduction. 5,703,955, Cl. 381-18.000.
Felsenstein, Kevin; Smith, David W.; Poss, Michael A.; Chaturvedula, Prasad; and Sloan, Charles P., to Bristol-Myers Squibb Company. 5-amino-6-cyclohexyl-4-hydroxy-hexanamide derivatives as inhibitors of β-amyloid protein production. 5,703,129, Cl. 514-613.000.
Felton, Jeffrey K.: *See—*
Cowan, Jerry W.; and Felton, Jeffrey K., 5,701,776, Cl. 72-332.000.
Fender, Michael: *See—*
Birkhan, Horst; Fender, Michael; Irrgang, Bernhard; Löffert, Christiane; and Schüssler, Simone, 5,703,035, Cl. 510-423.000.
Fenelli, Steven P.: *See—*
Schultz, Rose Ann; and Fenelli, Steven P., 5,703,195, Cl. 528-103.000.
Fent, Douglas G.: *See—*
Bullock, Norma Kathryn; and Fent, Douglas G., 5,703,471, Cl. 320-51.000.

Feral, Thierry; Fromont, Bernard; Stephan, Ronan; Sernit, Eric; and Lacour, Olivier, to Thomson-CSF. Process for manufacturing a piezoelectric component. 5,703,425, Cl. 310-366.000.
Ferguson, Kenneth M.: *See—*
Beavo, Joseph A.; Corbin, Jackie D.; Ferguson, Kenneth M.; Francis, Sharron H.; Kadlecek, Ann; Loughney, Kate; McAllister-Lucas, Linda M.; Sonnenburg, William K.; and Thomas, Melissa K., 5,702,936, Cl. 435-196.000.
Ferkile, William Joseph: *See—*
Bases, Gary John; Detzel, Roger A.; Devault, Douglas James; and Ferkile, William Joseph, 5,701,711, Cl. 52-506.030.
Fernandes, Peter: *See—*
Hanisch, Wolfgang H.; and Fernandes, Peter, 5,702,699, Cl. 424-85.600.
Fernandez-Kirchberger, Paul; and Seidl, Joachim, to MTL Modern Technologies Lizenz GmbH. Set in sheet form as well as apparatus and method for producing such a set. 5,702,789, Cl. 428-40.100.
Ferrara, Daniel A., Jr., to Precision Valve Corporation. Aerosol total release actuator having a delay in product emission. 5,702,036, Cl. 222-402.130.
Ferrario, Carlos M.: *See—*
Berry, Joel L.; Ferrario, Carlos M.; Dean, Richard H.; and Newman, Virginia S., 5,702,419, Cl. 606-198.000.
Fessler, Charles B.: *See—*
Kanjo, Wajih; Smith, Eric; Demoise, Thomas J.; Girotti, Michael; McCabe, Thomas; Fessler, Charles B.; and Natschke, Scott, 5,701,974, Cl. 188-1.11R.
Fetters, Lewis J.: *See—*
Struglinski, Mark Joseph; VerStrate, Gary William; and Fetters, Lewis J., 5,703,171, Cl. 525-314.000.
Fezza, Richard J.; and Williams, Stephen D., to Montell North America Inc. Removal of oligomers from substantially crystalline, α-olefin polymers. 5,703,203, Cl. 528-483.000.
Fiber-Conn Assemblies, Inc.: *See—*
Dahan, Michael; and Ehrenreich, John M., 5,703,981, Cl. 385-78.000.
Fiberweb France: *See—*
Ehret, Philippe; Guipouy, Philippe; and Lahtenkorva, Kimmo, 5,702,826, Cl. 428-515.000.
Fidkowski, Zbigniew Tadeusz: *See—*
Agrawal, Rakesh; Fidkowski, Zbigniew Tadeusz; and Herron, Donn Michael, 5,701,764, Cl. 62-646.000.
Fiedler, Alan: *See—*
Clark, Iain R.; and Fiedler, Alan, 5,703,587, Cl. 341-144.000.
Fiedler, Detlef Herbert: *See—*
Steenblock, Roland Eugen; Kock, Norbert Franz; and Fiedler, Detlef Herbert, 5,703,161, Cl. 525-66.000.
Figueroa, Alejandro: *See—*
Zyngier, Alexandre; Wiegand, Benjamin Carl; Figueroa, Alejandro; and Brunsman, Michael August, 5,703,025, Cl. 510-147.000.
Fila U.S.A., Inc.: *See—*
Crowley, Kevin J., 5,701,688, Cl. 36-72.00R.
Filas, Robert William; and Marchman, Herschel Maclyn, to Lucent Technologies Inc. Cylindrical fiber probe devices. 5,703,979, Cl. 385-43.000.
Fillion, Raymond A.: *See—*
Kachmarik, David J.; Soules, Thomas F.; Fillion, Raymond A.; Steinbrenner, Erwin G.; and Kuk, Donald W., 5,703,440, Cl. 315-56.000.
Findlan, Shane J.: *See—*
Ocken, Howard; Findlan, Shane J.; and Phillips, Michael K., 5,702,668, Cl. 420-57.000.
Findlay, John Bruce: *See—*
Cummins, Thomas J.; Atwood, Susan Melissa; Bergmeyer, Lynn; Findlay, John Bruce; Sutherland, John W.H.; and Kerschner, JoAnne H., 5,702,901, Cl. 435-6.000.
Finney, Randal D.; and Adamson, Robert D. Machine for removal of materials from a surface. 5,702,161, Cl. 299-37.100.
Finnicum, Douglas Scott; Finucane, Lawrence J.; Peters, Jack Duane; and Le, Son Minh, to Eastman Kodak Company. Flywheel for coating rolls. 5,702,524, Cl. 118-200.000.
Finucane, Lawrence J.: *See—*
Finnicum, Douglas Scott; Finucane, Lawrence J.; Peters, Jack Duane; and Le, Son Minh, 5,702,524, Cl. 118-200.000.
Firma Fedag: *See—*
Jonischus, Jürgen, 5,701,633, Cl. 15-387.000.
Fischer, Jakob: *See—*
Herrmann, Wolfgang A.; Fischer, Jakob; Elison, Martina; and Köcher, Christian, 5,703,269, Cl. 560-19.000.
Fischer, Joachim: *See—*
Schweinzer, Jürgen; Fischer, Joachim; De Grave, Isidoor; and Kögel, Wolfram, 5,703,135, Cl. 521-60.000.
Fischer, Steven M.; Nordman, Robert G.; and Werlich, Mark H., to Hewlett-Packard Company. Automated calibrant system for use in a liquid separation/mass spectrometry apparatus. 5,703,360, Cl. 250-288.000.
Fischer, Walter: *See—*
Law, Say-Jong; Jiang, Qingping; Fischer, Walter; Unger, John T.; and Krodel, Elizabeth K., 5,702,887, Cl. 435-6.000.
Fishback, Gary M.; Egan, Dennis M.; and Stelmar, Hilary, to Plasphalt Project Ltd. Co. Plastic asphalt paving material and method of making same. 5,702,199, Cl. 404-17.000.
Fisher & Paykel Limited: *See—*
Johnson, Hugh Griffith, 5,701,684, Cl. 34-595.000.
Fisher, Burton: *See—*
Murphy, James V.; Murphy, Michael J.; Fisher, Burton; and Taylor, Robert, 5,702,255, Cl. 439-71.000.
Fisher, Steven C.; Adams, Theodore C.; Stangeland, Maynard L.; Rietdyk, Jacob; and Winans, Paul R., to Boeing North American, Inc. Method of making rocket engine combustion chamber utilizing "slide in" port liner. 5,701,670, Cl. 29-890.010.
Fiske, Thomas G.: *See—*
Martin, Russel A.; Bruce, Richard H.; DeCosta, Victor M.; Fiske, Thomas G.; Lewis, Alan G.; Silverstein, Louis D.; Steemers, Hugo L.; Thompson, Malcolm J.; and Turner, William D., 5,703,621, Cl. 345-147.000.
Fite, Barry Alan: *See—*
Mitchell, Michael L.; Fite, Barry Alan; Saito, Akiya; and New, Anthony C., 5,703,858, Cl. 369-58.000.
Fitzgerald, Jamesina Anne, to Procter & Gamble Company, The. Methods for the prevention and treatment of gastrointestinal disorders caused or mediated by algae or cyanobacteria. 5,702,729, Cl. 424-653.000.
Fitzgerald, Pat: *See—*
Quan, Clifton; Holbrook, Peter; Batterton, Bill; Fitzgerald, Pat; Roper, Dan; and Takaki, Min, 5,703,599, Cl. 342-368.000.
Flaherty, J. Christopher. Septumless implantable treatment material device. 5,702,363, Cl. 604-93.000.
Flanagan, Robert H.: *See—*
Wilson, Robert; Beesley, Laurence Robert; and Flanagan, Robert H., 5,701,788, Cl. 76-104.100.
Flanigan, Dennis F., to United States of America, Army. One-window cell for testing passive remote vapor detectors. 5,703,276, Cl. 73-1.020.
Fleche, Guy: *See—*
Dehennau, Claude; Depireux, Thierry; Fleche, Guy; Gosset, Serge; and Videau, Didier, 5,703,160, Cl. 525-54.240.
Fleck, Rod; and Boening, Werner, to Siemens Aktiengesellschaft. Integrated microprocessor with internal bus and on-chip peripheral. 5,704,048, Cl. 395-306.000.
Fleissner, Gerold, to Fleissner GmbH & Co. Maschinenfabrik. Method for compaction of fiber fleece. 5,701,643, Cl. 28-105.000.
Fleissner GmbH & Co. Maschinenfabrik: *See—*
Fleissner, Gerold, 5,701,643, Cl. 28-105.000.
Flesher, H. Kelly; and Youmans, Albert P., to Aptek Industries, Inc. Flexible electronic card and method. 5,703,755, Cl. 361-737.000.
Flesser, Achim: *See—*
Heintke, Hans-Eberhard; and Flesser, Achim, 5,702,403, Cl. 606-133.000.
Fletcher, Daniel John: *See—*
Amir, Avner; Fletcher, Daniel John; and Jewett, Don Lee, 5,701,909, Cl. 128-731.000.
Florczak, Jeffrey M.: *See—*
Taylor, Phillip A.; Florczak, Jeffrey M.; Peterson, Mark A.; Iverson, Paul R.; Skorjanec, Joseph; and Lorentz, Robert D., 5,702,876, Cl. 430-496.000.
Flores, Aaron G., to Schlumberger Technology Corporation. Apparatus and method for actively cooling instrumentation in a high temperature environment. 5,701,751, Cl. 62-169.000.
Flores, Mauricio: *See—*
Burrell, Dennis A.; Davis, James Talmage, II; and Flores, Mauricio, 5,703,600, Cl. 343-700.0MS.
Flow International Corporation: *See—*
Schuman, Bruce M.; and Ting, Edmund Y., 5,701,808, Cl. 99-453.000.
Floyd, Robert L., to Lubrizol Corporation, The. Sulfurized vegetable oils containing anti-oxidants for use as base fluids. 5,703,022, Cl. 508-345.000.
Fluegel, Kyle G., to E-Systems, Inc. Modular liquid skin heat exchanger. 5,702,073, Cl. 244-57.000.
Fluke Corporation: *See—*
Harder, Piet, 5,703,324, Cl. 174-21.00C.
Fluorochem, Inc.: *See—*
Baum, Kurt, 5,703,163, Cl. 525-105.000.
FMC Corporation: *See—*
Meester, David Jeffrey, 5,702,301, Cl. 460-144.000.
Fondas, Evangelos; and Papageorge, Christopher. Snorkel with strobe light. 5,701,884, Cl. 128-201.110.
Fong, Sherman: *See—*
Doerschuk, Claire M.; Fong, Sherman; Hebert, Caroline Alice; Kim, Kyung Jin; and Leong, Steven R., 5,702,946, Cl. 435-320.100.
Foo, Chek-Peng; Yeh, Huahn-Fern; Wright, Timothy Chester; and Shields, Anne Marie, to TRW Inc. Method and apparatus for sensing a vehicle crash using a displacement velocity metric. 5,702,124, Cl. 280-735.000.
Foo, Ken Kok: *See—*
Wu, Xingwei; Stiles, James Alexander Robert; Foo, Ken Kok; and Bailey, Phillip, 5,702,565, Cl. 156-643.100.
Foos, Jacques; Guy, Alain; Lemaire, Marc; Leclere, Bruno; Le Buzit, Gérard; and Doutreluingne, Pierre, to Compagnie Generales Des Matieres Nucleaires. Process and installation for the decontamination of radioactive nitric effluents containing strontium and sodium. 5,702,608, Cl. 210-668.000.
Foos, Joseph S.; and Benco, John S., to Chiron Diagnostics Corporation. Method of preparing an electrochemical planar metal/metal oxide electrode. 5,702,575, Cl. 204-292.000.
Foote, Keith D.: *See—*
Boddy, Ian; Potts, Matthew D.; and Foote, Keith D., 5,703,731, Cl. 359-841.000.
Boddy, Ian; Potts, Matthew D.; Foote, Keith D.; and Ruse, James, 5,703,732, Cl. 359-841.000.
Foran, James: *See—*
Voorhies, Douglas; and Foran, James, 5,704,024, Cl. 395-126.000.
Ford, Cheryl Ann: *See—*

Bikson, Benjamin; Giglia, Salvatore; Nicholas, Patrick Samuel, Jr.; and Ford, Cheryl Ann, 5,702,601, Cl. 210-321.790.
Ford Global Technologies, Inc.: *See—*
Boehme, Dietmar, 5,701,759, Cl. 62-503.000.
Branik, David P.; Roulinson, Daniel A.; and Umin, Gerald L., 5,701,737, Cl. 60-299.000.
Brassai, Zoltan; Schneider, Bjoern; and Premiski, Vladimir, 5,702,320. Cl. 475-159.000.
Moradi, Mohammad A.; Rossman, Michael D.; LaBell, Larry; and Holz, Bonita, 5,703,796, Cl. 364-563.000.
Tran, Minh N.; and Hrovat, Davorin D., 5,702,164, Cl. 303-139.000.
Treharne, William David, 5,703,413, Cl. 307-10.100.
Ford, James Arthur; Bertva, Don Lee; Kennedy, James Murrell; and Presdorf, Ronald Lynn, to Cooper Industries, Inc. Cellular shade. 5,701,940, Cl. 160-84.050.
Ford Motor Company: *See—*
Boaz, Premakaran Tucker, 5,702,520, Cl. 106-600.000.
Goenka, Lakhi N.; Todd, Michael G.; and Glovatsky, Andrew Z., 5,702,584, Cl. 205-158.000.
Karur, Chandresekar R.; Vanden Berg, Ted A.; Jairazbhoy, Vivek A.; and Hitchen, Christopher, 5,703,290, Cl. 73-430.000.
Richardson, Alan David; Early, Paul Timothy; Brown, Larry Thomas; Ortmann, Walter Joseph; and Bos, Edward Albert, 5,701,869, Cl. 123-497.000.
Skelly, Jon M.; and Wilski, Lawrence F., 5,702,772, Cl. 427-536.000.
Foreman, Mark M.; and Leander, J. David, to Eli Lilly and Company. Method of preventing emesis using tetrahydrobenz [CD]indole-6-carbonxamides. 5,703,112, Cl. 514-411.000.
Forrest, Stephen R.; Thompson, Mark E.; Burrows, Paul E.; Bulovic, Vladimir; and Gu, Gong, to Trustees Of Princeton University, The. Transparent contacts for organic devices. 5,703,436, Cl. 313-506.000.
Forrestal, Lloyd; Voorhees, Marc; Chen, Yung-Ming; and Edrich, Richard A., to COBE Laboratories, Inc. Biocompatible coated article. 5,702,823, Cl. 428-450.000.
Forsyth, Walter James: *See—*
Simmons, Daniel Cecil; Forsyth, Walter James; and Isley, Reggald Emory, 5,702,238, Cl. 417-380.000.
Foss, Richard C., to Mosaid Technologies Incorporated. Repeater with threshold modulation. 5,703,508, Cl. 327-111.000.
Foss, Warren M.: *See—*
Degen, Peter J.; and Foss, Warren M., 5,702,616, Cl. 210-767.000.
Foster, John; Taylor, Alan; and Chatterley, Martin Patrick, to Praxair S.T. Technology, Inc. Jig for coating rotor blades. 5,702,574, Cl. 204-224.00R.
Foster, Michael D.: *See—*
Funk, Michael R.; Irwin, Larry E.; and Foster, Michael D., 5,702,588, Cl. 205-595.000.
Fourmaintraux, Eric: *See—*
Lesieur, Daniel; Fourmaintraux, Eric; Depreux, Patrick; Delagrange, Philippe; Renard, Pierre; and Guardiola-Lemaitre, Béatrice, 5,703,121, Cl. 514-469.000.
Fowler, Jimmy E.: *See—*
Resio, Donald T.; Briggs, Michael J.; Fowler, Jimmy E.; and Markle, Dennis G., 5,702,203, Cl. 405-26.000.
Fowler, Thomas J.; and Rus, Liviu, to Lear Seating Corporation. Folding second seat with seat track release latch mechanism. 5,702,145, Cl. 296-66.000.
Foxboro Company, The: *See—*
Hansen, Peter D.; and Badavas, Paul C., 5,704,011, Cl. 395-22.000.
Fraiser, Melinda S.; and Walker, George Terrance, to Becton, Dickinson and Company. Nicking of DNA using boronated nucleotides. 5,702,926, Cl. 435-91.200.
Framatome: *See—*
Mardon, Jean-Paul; Sevenat, Jean; and Charquet, Daniel, 5,702,544, Cl. 148-672.000.
Framo Engineering AS: *See—*
Jostein, Erstad, 5,702,130, Cl. 285-96.000.
Mohn, Frank, 5,701,797, Cl. 92-80.000.
Frampton, Harry, to Allied Colloids Limited. Downhole fluid control processes. 5,701,955, Cl. 166-295.000.
France Telecom: *See—*
Ghirardi, Frédéric; Mersali, Boumédienne; Bruno, Adrien; and Giraudet, Louis, 5,703,895, Cl. 372-50.000.
Le Person, Henri; Minot, Christophe; and Palmier, Jean-François, 5,703,379, Cl. 257-21.000.
France Telecom Etablissement autonome de droit public: *See—*
Massaloux, Dominique, 5,704,002, Cl. 395-2.290.
Franchet, Michel: *See—*
Charbonnel, Jean-Louis; Franchet, Michel; and Naudet, Jacky Serge, 5,702,217, Cl. 411-909.000.
Franchino, Anthony R.; and McDonald, Steven, to United States of America, Army. Artillery gun mount. 5,703,318, Cl. 89-37.070.
Francis, Sharron H.: *See—*
Beavo, Joseph A.; Corbin, Jackie D.; Ferguson, Kenneth M.; Francis, Sharron H.; Kadlecek, Ann; Loughney, Kate; McAllister-Lucas, Linda M.; Sonnenburg, William K.; and Thomas, Melissa K., 5,702,936, Cl. 435-196.000.
Franco, Alberto: *See—*
Larson, Carl O., Jr.; Smith, James S.; Chapman, John H.; Slimon, Scot A.; John, Trahan D.; Robert, J. Brozek; Franco, Alberto; McGarvey, John J.; Rosen, Marvin E.; and Pasque, Michael K., 5,702,430, Cl. 607-1.000.
Francois, Jacques: *See—*
Manser, Aloysius Hubertus; and Francois, Jacques, 5,702,557, Cl. 156-275.700.
Frank, Cyril B.: *See—*
McPherson, Roger W.; Shrive, Nigel G.; Damson, Erich; Frank, Cyril B.; Lhenen, Fred; and Schachar, Norman S., 5,701,913, Cl. 128-774.000.
Frank, Detlef: *See—*
Jester, Randy Douglas; Penoyer, John Arthur; Roth, Douglas Duane; Frank, Detlef; Onodera, Minoru; Tsudaka, Takeichi; Sato, Toshiaki; and Moritani, Tobei, 5,703,202, Cl. 528-481.000.
Frank, László: *See—*
Eszenyi, Tibor; Sebök, Péter; Frank, László; Papp, Gyula; Timár, Tibor; and Bartik, Tamás, 5,703,113, Cl. 514-422.000.
Franklin, Joseph F.; and Reese, Owen N., II, to HK Systems, Inc. Apparatus and method for palletizing and wrapping a load. 5,701,722, Cl. 53-399.000.
Frantzen, Frank: *See—*
Sundrehagen, Erling; and Frantzen, Frank, 5,702,952, Cl. 436-67.000.
Frasier, Ellie Marie: *See—*
Trani, Marina; Trigiante, Guiseppe; and Frasier, Ellie Marie, 5,703,031, Cl. 510-312.000.
Fraunhofer-Gesellschaft zur Foerderung der angewandten Forschung e.V.: *See—*
Herre, Jurgen; Seitzer, Dieter; Brandenburg, Karl-Heinz; and Eberlein, Ernst, 5,703,999, Cl. 395-2.120.
Fraunhofer-Gesellschaft Zur Forderung der Angewandten Forschung e.V.: *See—*
Wang, Zhigong; and Berroth, Manfred, 5,703,912, Cl. 375-354.000.
Fred Hutchinson Cancer Research Center: *See—*
Nash, Richard A.; and Storb, Rainer, 5,702,919, Cl. 435-69.500.
Frederick, Robert Thomas: *See—*
Tayloe, Daniel Richard; Miller, Nathan West; and Frederick, Robert Thomas, 5,703,595, Cl. 342-175.000.
Fredette, Mark A.: *See—*
Liebke, William R.; Dawson, David R.; Fredette, Mark A.; and Goodstein, Mark B., 5,702,288, Cl. 451-36.000.
Fredin, Stig Bertil Artur: *See—*
Brännström, Östen Kurt; and Fredin, Stig Bertil Artur, 5,702,112, Cl. 279-19.000.
Freed, Anna B. Virtual hinge. 5,702,013, Cl. 215-206.000.
Freeman, Brian: *See—*
Mammone, Richard J.; Farrell, Kevin; and Freeman, Brian, 5,703,908, Cl. 375-278.000.
Frenken, Heinz-Josef: *See—*
Gehrer, Udo; Gibbels, Rolf; and Frenken, Heinz-Josef, 5,703,633, Cl. 347-86.000.
Freskos, John N.: *See—*
Talley, John J.; Getman, Daniel P.; Lin, Ko-Chung; DeCrescenzo, Gary A.; Rogier, Donald J., Jr.; and Freskos, John N., 5,703,076, Cl. 514-237.500.
Frey, Thomas J.: *See—*
Perry, Eric J.; and Frey, Thomas J., 5,701,998, Cl. 206-315.100.
Friederich, Hans-Werner; and Kupczik, Günter, to Kupczik, Günter; and Phoenix Aktiengesellschaft. Pivotal link. 5,702,132, Cl. 285-235.000.
Friedrichsen, Welm, to Danfoss A/S. Hydraulic system. 5,701,795, Cl. 91-446.000.
Fries, Gerhard: *See—*
Christmann, Norbert Ernst; and Fries, Gerhard, 5,702,044, Cl. 226-173.000.
Fritz, Gregory G.; and Patterson, Donald J. Rack especially adapted for use with bicycles. 5,702,007, Cl. 211-17.000.
Fritz, James E.; Tseka, Thomas C.; and Sutula, Daniel P., Jr., to Ensign-Bickford Company, The. Connector block for blast initiation systems. 5,703,319, Cl. 102-275.700.
Fritzemeier, Karl-Heinrich: *See—*
Ottow, Eckhard; Schwede, Wolfgang; Halfbrodt, Wolfgang; Fritzemeier, Karl-Heinrich; and Krattenmacher, Rolf, 5,703,066, Cl. 514-173.000.
Frommann, Klaus: *See—*
Paramonov, Vladimir A.; Tychinin, Anatolij I.; Moroz, Anatolij I.; Birger, Boris L.; Frommann, Klaus; Haupt, Werner; and Ottersbach, Walter, 5,702,528, Cl. 118-623.000.
Fromont, Bernard: *See—*
Feral, Thierry; Fromont, Bernard; Stephan, Ronan; Sernit, Eric; and Lacour, Olivier, 5,703,425, Cl. 310-366.000.
Frost, Jonathan C.; Gascoyne, John M.; Hards, Graham A.; Wilkinson, David P.; and Prater, Keith B., to Johnson Matthey Public Limited Company. Manufacture of electrodes. 5,702,839, Cl. 429-42.000.
Frūh, Thomas; Pitterna, Thomas; Murata, Toshiki; Svensson, Lene D.; Yuumoto, Yoko; and Sakaki, Junichi, to Japat Ltd. Antagonists of endothelin receptors. 5,703,106, Cl. 514-378.000.
Fryberg, Mario; Göttel, Otto; and Stauner, Thomas, to Ilford A.G. Dihydrazides. 5,702,866, Cl. 430-264.000.
Frye Electronics, Inc.: *See—*
Russell, Timothy M., 5,703,797, Cl. 364-576.000.
Fu, Chi-Yung; and Petrich, Loren I., to University of California, The Regents of the. Image compression/decompression based on mathematical transform, reduction/expansion, and image sharpening. 5,703,965, Cl. 382-232.000.
Fu, Jie, to Kabushiki Kaisha Ohara. Lithium ion conductive glass-ceramics. 5,702,995, Cl. 501-10.000.
Fuglsang, Claus: *See—*

Hastrup, Sven; Branner, Sven; Jørgensen, Birthe Ravn; Christensen, Tove; Jørgensen, Birgitte Bojer; Shuster, Jeffrey R.; Madden, Mark; Moyer, Donna L.; and Fuglsang, Claus, 5,702,934, Cl. 435-183.000.
Fuji Jukogyo Kabushiki Kaisha: *See—*
Nagano, Toshihiro; Sato, Yoshiaki; Nishimori, Jun; and Tachibana, Fusao, 5,701,856, Cl. 123-73.0AD.
Ohta, Tatsuya; and Moritani, Masami, 5,703,340, Cl. 219-121.480.
Fuji Machine Mfg. Co., Ltd.: *See—*
Asai, Koichi; Isogai, Takeyoshi; Mizuno, Manabu; and Adachi, Jun, 5,701,821, Cl. 101-424.000.
Fuji Photo Film Co., Ltd.: *See—*
Esaki, Toshiro; and Kubota, Masayuki, 5,701,663, Cl. 29-783.000.
Kunita, Kazuto; and Kondo, Syunichi, 5,703,140, Cl. 522-57.000.
Maruyama, Yoichi, 5,702,878, Cl. 430-567.000.
Mihayashi, Keiji; and Ryoke, Katsumi, 5,702,800, Cl. 428-144.000.
Miyano, Hitoshi, 5,703,724, Cl. 359-660.000.
Murayama, Yuichiro; Satake, Masaki; Hashimoto, Hiroshi; and Okita, Tsutomu, 5,702,821, Cl. 428-425.900.
Narita, Toshihiko; Nakamura, Hiroaki; Katakura, Kazuhiko; and Nakaya, Yoshihito, 5,703,671, Cl. 355-32.000.
Nishimura, Toru, 5,702,169, Cl. 353-25.000.
Nishio, Tomonori, 5,703,674, Cl. 355-46.000.
Nozaki, Nobuharu; Mitsumoto, Shinji; Kubo, Kazumi; and Kobayashi, Fumio, 5,703,900, Cl. 372-107.000.
Ono, Shuji, 5,704,015, Cl. 395-25.000.
Saito, Hirokazu; and Tada, Sugihiko, 5,702,851, Cl. 430-30.000.
Terashita, Takaaki, 5,703,672, Cl. 355-38.000.
Tokuda, Kanji, 5,703,673, Cl. 355-40.000.
Usami, Yoshihisa, 5,703,615, Cl. 345-97.000.
Fuji Photo Optical Co., Ltd: *See—*
Miyano, Hitoshi, 5,703,724, Cl. 359-660.000.
Morizumi, Masaaki, 5,702,349, Cl. 600-131.000.
Nozaki, Nobuharu; Mitsumoto, Shinji; Kubo, Kazumi; and Kobayashi, Fumio, 5,703,900, Cl. 372-107.000.
Fuji Xerox Co, Ltd.: *See—*
Mashimo, Kiyokazu; Ojima, Fumio; Ishii, Toru; and Nukada, Katsumi, 5,702,856, Cl. 430-96.000.
Fuji Xerox Co., Ltd.: *See—*
Fukunaga, Hideki; Yamaguchi, Shoji; and Nomiyama, Takashi, 5,703,860, Cl. 369-102.000.
Fujii, Hideaki; Ishiga, Hiroshi; Harayama, Masatoshi; and Oka, Motohiro, to Dai Nippon Printing Co., Ltd. Plasma display panel and method for forming fluorescent screens of the same. 5,703,433, Cl. 313-484.000.
Fujii, Yoshio: *See—*
Suzuki, Shigehisa; Fukami, Tatsuya; Fujii, Yoshio; Kawano, Yuji; and Maeda, Yoshinobu, 5,703,733, Cl. 360-77.010.
Fujiki, Tohru: *See—*
Ohmae, Tadayuki; Hisada, Haruhiko; Hosoda, Kenichi; Yoshiya, Masahide; Komori, Yoshiyuki; Yamaguchi, Noboru; Fujiki, Tohru; and Yasuda, Noriyasu, 5,703,167, Cl. 525-207.000.
Fujimaru, Atsushi: *See—*
Osawa, Yukio; Shimamoto, Katsuhiko; Ishigaki, Shinichi; Araki, Hitoshi; Nakata, Yukio; and Fujimaru, Atsushi, 5,702,501, Cl. 75-255.000.
Fujimori, Yasuhiro: *See—*
Kondo, Tetsujiro; Fujimori, Yasuhiro; Takahashi, Kenji; and Kawaguchi, Kunio, 5,703,652, Cl. 348-421.000.
Fujimoto, Hiroaki: *See—*
Nakase, Ryoichi; Ozawa, Shigeyuki; Fujimoto, Hiroaki; and Suzuki, Takehisa, 5,702,276, Cl. 440-89.000.
Fujimoto, Koichi: *See—*
Yanagisawa, Hiroaki; Fujita, Takashi; Fujimoto, Koichi; Yoshioka, Takao; Wada, Kunio; Oguchi, Minoru; Fujiwara, Toshihiko; and Horikoshi, Hiroyoshi, 5,703,096, Cl. 514-326.000.
Fujimoto, Makoto: *See—*
Mori, Tsutomu; Fujimoto, Makoto; Goto, Yukie; and Egusa, Yo, 5,703,644, Cl. 348-363.000.
Fujimoto, Masahiro; and Orihara, Katsuhisa, to Sony Chemicals Corp. Transmitter-receiver for non-contact IC card system. 5,703,573, Cl. 340-825.540.
Fujimoto, Tetsuya: *See—*
Shimizu, Osamu; Harada, Kazuya; Wada, Shinichi; Fujimoto, Tetsuya; and Inui, Takanari, 5,702,190, Cl. 400-341.000.
Fujimura, Hiroyuki; Suzuki, Takayuki; Yamada, Norio; Ichiki, Yoshiyuki; Maezawa, Akihiko; and Hayashi, Hideo, to Ebara Corporation. Method for treating exhaust gases and foul water. 5,702,572, Cl. 204-157.150.
Fujimura, Munenori: *See—*
Takahashi, Kazuaki; Hasegawa, Makoto; Makimoto, Mitsuo; and Fujimura, Munenori, 5,703,546, Cl. 333-204.000.
Fujinami, Yasushi: *See—*
Tahara, Katsumi; Koyanagi, Hideki; Yagasaki, Yoichi; and Fujinami, Yasushi, 5,703,859, Cl. 369-84.000.
Fujio, Mitsuhiko: *See—*
Miyamoto, Masayuki; Iizuka, Kunihiko; Fujio, Mitsuhiko; and Matsui, Hirofumi, 5,703,503, Cl. 327-58.000.
Fujioka, Kazuyoshi; Kubo, Masumi; and Takafuji, Yutaka, to Sharp Kabushiki Kaisha. Projection type liquid crystal display apparatus. 5,703,663, Cl. 349-5.000.
Fujisaki, Yoshihiro: *See—*
Yasohara, Masahiro; Fujisaki, Yoshihiro; and Takada, Kazuyuki, 5,703,459, Cl. 318-808.000.
Fujishima, Hiromichi: *See—*
Takahashi, Hiroyuki; Hamada, Makoto; Fujishima, Hiromichi; Naito, Masaaki; Sasaki, Kazuya; Tsuchiya, Jiro; and Maeda, Tomoharu, 5,702,123, Cl. 280-735.000.
Fujishima, Kazuo: *See—*
Watanabe, Hiroshi; Hirata, Toichi; Haga, Masakazu; Yamagata, Eiji; Fujishima, Kazuo; and Adachi, Hiroyuki, 5,701,691, Cl. 37-348.000.
Fujishima, Shizu; and Yamano, Naoko, to Agency of Industrial Science & Technology. Glucosamine-6-phosphate deaminase and process for producing the same. 5,702,939, Cl. 435-233.000.
Fujita, Hidehiro; and Tachizaki, Hisashi, to Kabushiki Kaisha Toshiba. X-ray computed tomography apparatus. 5,703,921, Cl. 378-4.000.
Fujita, Hiroshi: *See—*
Matsumoto, Takayuki; Matsumoto, Yasuomi; and Fujita, Hiroshi, 5,702,241, Cl. 418-55.400.
Fujita, Jun-Ichi: *See—*
Ohnishi, Yoshitake; Fujita, Jun-Ichi; Arduini, Arturo; Casnati, Alessandro; Pochini, Andrea; and Ungaro, Rocco, 5,702,620, Cl. 216-49.000.
Fujita, Katsutoshi: *See—*
Ueno, Makoto; Fujita, Katsutoshi; and Shimazaki, Tetsuo, 5,703,426, Cl. 310-258.000.
Fujita, Masayuki; and Ishii, Takahiro, to Sumitomo Chemical Company, Limited. Process for producing styrenic polymer. 5,703,184, Cl. 526-220.000.
Fujita, Masayuki: *See—*
Iwakiri, Hiroshi; Fujita, Masayuki; and Hasegawa, Takashi, 5,703,146, Cl. 523-200.000.
Fujita, Ryuji; and Sugahara, Hirohide, to Fujitsu Limited. Cache-data transfer system. 5,704,056, Cl. 395-445.000.
Fujita, Takashi: *See—*
Yanagisawa, Hiroaki; Fujita, Takashi; Fujimoto, Koichi; Yoshioka, Takao; Wada, Kunio; Oguchi, Minoru; Fujiwara, Toshihiko; and Horikoshi, Hiroyoshi, 5,703,096, Cl. 514-326.000.
Fujitsu Limited: *See—*
Fujita, Ryuji; and Sugahara, Hirohide, 5,704,056, Cl. 395-445.000.
Fukumitsu, Katsumi; and Takada, Tadayuki, 5,703,409, Cl. 371-5.100.
Gotoh, Kohtaroh, 5,703,819, Cl. 365-203.000.
Iwamida, Hitoshi, 5,704,005, Cl. 395-2.630.
Izumi, Shigeichi, 5,703,991, Cl. 385-135.000.
Kanzaki, Tomoyuki, 5,704,030, Cl. 395-182.100.
Katsuyama, Yukio; and Yamakawa, Kengo, 5,703,843, Cl. 369-34.000.
Komiyama, Manabu; Sato, Shunichi; Sonetsuji, Noboru; Ishizaka, Tetsuo; and Yokoi, Saeko, 5,703,893, Cl. 372-43.000.
Mikami, Ichizou; Komasaka, Toshio; Niimi, Masahiro; and Miyamoto, Takashi, 5,704,031, Cl. 395-182.020.
Miura, Kenji, 5,703,880, Cl. 370-465.000.
Nakagawa, Akira; Morimatsu, Eishi; Konoshima, Makiko; and Matsuda, Kiichi, 5,703,704, Cl. 359-9.000.
Namiki, Takefumi, 5,703,787, Cl. 364-487.000.
Nishimura, Koichi; and Matsumiya, Masato, 5,703,814, Cl. 365-189.090.
Okamoto, Masaaki, 5,703,511, Cl. 327-157.000.
Shimizu, Osamu; Harada, Kazuya; Wada, Shinichi; Fujimoto, Tetsuya; and Inui, Takanari, 5,702,190, Cl. 400-341.000.
Sono, Michio; Tsuji, Kazuto; Sakoda, Hideharu; Suzuki, Yoshimi; and Sakuma, Masao, 5,703,398, Cl. 257-706.000.
Fujiwara, Seishi: *See—*
Hiraiwa, Hiroyuki; Nakagawa, Kazuhiro; Jinbo, Hiroki; Takano, Jun; and Fujiwara, Seishi, 5,702,495, Cl. 65-17.100.
Komine, Norio; Jinbo, Hiroki; Fujiwara, Seishi; and Hiraiwa, Hiroyuki, 5,703,712, Cl. 359-350.000.
Fujiwara, Shiokazu: *See—*
Nakajima, Akihisa; Yabusaki, Masami; Hirata, Shoichi; Yamaguchi, Kenichi; Fujiwara, Shiokazu; Maruyama, Yasuo; Uchiyama, Yasuyuki; and Takemoto, Eriko, 5,703,941, Cl. 379-201.000.
Fujiwara, Toshihiko: *See—*
Yanagisawa, Hiroaki; Fujita, Takashi; Fujimoto, Koichi; Yoshioka, Takao; Wada, Kunio; Oguchi, Minoru; Fujiwara, Toshihiko; and Horikoshi, Hiroyoshi, 5,703,096, Cl. 514-326.000.
Fujiwara, Wataru; Hyoda, Junkoh; Yamazaki, Kenichi; and Kitamura, Noriko, to Sumitomo Dow Limited. Process of preparing copolymer latex and use thereof. 5,703,157, Cl. 524-822.000.
Fujiwara, Yuichi; Nakagawa, Chikao; Ito, Hiromi; and Kobayashi, Yoshinori, to Graphtec Corporation. Heat-sensitive type mimeographic screen forming apparatus. 5,701,816, Cl. 101-128.400.
Fukami, Tatsuya: *See—*
Suzuki, Shigehisa; Fukami, Tatsuya; Fujii, Yoshio; Kawano, Yuji; and Maeda, Yoshinobu, 5,703,733, Cl. 360-77.010.
Fukao, Tadashi; Chiba, Akira; and Michioka, Chikara, to Fukao, Tadashi; Chiba, Akira; Michioka, Chikara; Seiko Seiki Co., Inc.; Nikkiso Co., Ltd.; and Ebara Corporation. Energy storage flywheel system. 5,703,423, Cl. 310-90.500.
Fukazawa, Fumio: *See—*
Kumagai, Hiroki; and Fukazawa, Fumio, 5,703,687, Cl. 356-426.000.
Fukuda, Masami: *See—*
Umemoto, Toshio; Fukuda, Masami; Shimoda, Kenji; Kitajima, Yasuo; Kobayashi, Isamu; and Udou, Yurie, 5,703,837, Cl. 368-88.000.
Fukuda, Masaru: *See—*
Igura, Toshinori; and Fukuda, Masaru, 5,703,279, Cl. 73-40.000.
Igura, Toshinori; and Fukuda, Masaru, 5,703,280, Cl. 73-40.000.
Fukui, Wataru: *See—*

Morita, Shingo; Fukui, Wataru; and Wada, Shoichi, 5,701,876, Cl. 123-630.000.
Fukumitsu, Katsumi; and Takada, Tadayuki, to Fujitsu Limited. Error counting circuit. 5,703,409, Cl. 371-5.100.
Fukunaga, Hideki; Yamaguchi, Shoji; and Nomiyama, Takashi, to Fuji Xerox Co., Ltd. Optical imaging recording system for performing image recording by focusing modulated light beams. 5,703,860, Cl. 369-102.000.
Fukunaga, Takahiro: *See*—
  Numata, Yoshito; Asada, Hidehisa; Dohi, Keiji; Fukunaga, Takahiro; and Taniguchi, Yasushi, 5,702,910, Cl. 435-7.940.
Fukuoka, Minao: *See*—
  Tajima, Ikuo; Kojima, Terutada; Anesaki, Tomoaki; and Fukuoka, Minao, 5,701,832, Cl. 112-155.000.
Fukushi, Hideto: *See*—
  Miyake, Akio; Nakamura, Masahira; and Fukushi, Hideto, 5,703,081, Cl. 514-254.000.
Fukushima, Tetsuaki: *See*—
  Yoshida, Wataru; Fukushima, Tetsuaki; Taniguchi, Hideki; and Abe, Hiroshi, 5,703,264, Cl. 558-316.000.
Fukushima, Tsumoru: *See*—
  Kuwahara, Yasuhiro; Yamashita, Haruo; and Fukushima, Tsumoru, 5,703,968, Cl. 382-269.000.
Fulco, Frank J.; and Fulco, Frank J., Jr. Light collection and distribution apparatus. 5,703,720, Cl. 359-591.000.
Fulco, Frank J., Jr.: *See*—
  Fulco, Frank J.; and Fulco, Frank J., Jr., 5,703,720, Cl. 359-591.000.
Fulks, Gary Chris; and Cornwell, William Dale, Jr., to General Motors Corporation. Solenoid driver circuit and method. 5,703,748, Cl. 361-153.000.
Fullbright, Marshall. Apparatus and method for martial arts training. 5,702,327, Cl. 482-83.000.
Fuller, Carl: *See*—
  Smith, Clifford; and Fuller, Carl, 5,702,925, Cl. 435-91.100.
Fuller, William D.: *See*—
  Kurtz, Robert J.; and Fuller, William D., 5,703,053, Cl. 514-27.000.
Funai Electric Co., Ltd.: *See*—
  Higuchi, Yoshio, 5,703,447, Cl. 318-139.000.
Funakoshi, Shinji; and Kawai, Kenzou, to Asahi Kasei Kogyo Kabushiki Kaisha. Process for producing polycarbonate having terminal hydroxyl groups. 5,703,196, Cl. 528-196.000.
Fung, Simon S.: *See*—
  Hagen, Donald F.; Fung, Simon S.; and Hansen, Paul E., 5,702,610, Cl. 210-670.000.
Fung, Steven: *See*—
  Grossman, Paul David; Fung, Steven; Menchen, Steven Michael; Woo, Sam Lee; and Winn-Deen, Emily Susan, 5,703,222, Cl. 536-24.300.
Funk, Bernhard; and Menz, Gerhard, to Kiekert AG. Motor-vehicle door latch with child-safety lockout. 5,702,136, Cl. 292-336.300.
Funk, Michael R.; Irwin, Larry E.; and Foster, Michael D., to Semtech, Inc. Soap fiber extraction process. 5,702,588, Cl. 205-695.000.
Fura, Aberra: *See*—
  Cai, Xiong; Fura, Aberra; and Qian, Changgeng, 5,703,093, Cl. 514-312.000.
Furcht, Leo T.: *See*—
  Skubitz, Amy P. N.; and Furcht, Leo T., 5,703,205, Cl. 530-324.000.
Furtek, Frederick Curtis: *See*—
  Gould, Scott Whitney; Furtek, Frederick Curtis; Keyser, Frank Ray, III; Worth, Brian A.; and Zittritsch, Terrance John, 5,703,498, Cl. 326-40.000.
Furukawa, Souichi: *See*—
  Takahashi, Kazunori; Hamada, Nobuhiro; Takato, Masao; Nagai, Tohru; Suzuki, Toshiko; and Furukawa, Souichi, 5,703,778, Cl. 364-437.000.
Furuta, Akiko, to Nikon Corporation. Re-imaging converter lens apparatus and method. 5,703,716, Cl. 359-431.000.
Furuya, Hiromi: *See*—
  Torii, Masafumi; Furuya, Hiromi; Shimada, Masaru; and Tsutsui, Kyoji, 5,703,005, Cl. 503-201.000.
Futaba Denshi Kogyo K.K.: *See*—
  Kishino, Takao; Onodaka, Koji; Tanaka, Mitsuru; and Yamaguchi, Satoshi, 5,703,610, Cl. 345-74.000.
  Kishino, Takao; Yamaura, Tatsuo; Onodaka, Koji; and Itoh, Shigeo, 5,703,611, Cl. 345-74.000.
Futrex, Inc.: *See*—
  Rosenthal, Robert D., 5,703,364, Cl. 250-339.120.
Futsuhara, Koichi, to Nippon Signal Co., Ltd., The. Safety ensuring apparatus. 5,703,452, Cl. 318-558.000.
Fyson, John Richard; and Evans, Gareth Bryn, to Eastman Kodak Company. Method of processing photographic silver halide materials. 5,702,874, Cl. 430-373.000.
G. D. Searle & Co.: *See*—
  Bovy, Philippe R.; Rico, Joseph G.; Rogers, Thomas E.; Tjoeng, Foe S.; and Zablocki, Jeffery A., 5,703,125, Cl. 514-539.000.
  Talley, John J.; Getman, Daniel P.; Lin, Ko-Chung; DeCrescenzo, Gary A.; Rogier, Donald J., Jr.; and Freskos, John N., 5,703,076, Cl. 514-237.500.
G.D Societa' Per Azioni: *See*—
  Neri, Armando; and Turra, Mario, 5,701,725, Cl. 53[illegible]-466.000.
Gabriel, Calvin T.; and Laparra, Olivier F., to VLSI Technology, Inc. Sloped silicon nitride etch for smoother field oxide edge. 5,702,978, Cl. 437-65.000.
Gabriel, Stefan M.; and Sheehan, David G., to Johnson & Johnson Professional, Inc. Patellar resurfacing component. 5,702,467, Cl. 623-20.000.
Gaeta, Federico C. A.; Galan, Adam Antoni; and Stracker, Elaine C., to Geron Corporation. Telomerase Inhibitors. 5,703,116, Cl. 514-443.000.
Gaffney, Anne M.; Kahn, Andrew P.; and Pitchai, Rangasamy, to Arco Chemical Technology, L.P. Propylene oxide process using mixed precious metal catalyst supported on alkaline earth metal carbonate. 5,703,254, Cl. 549-536.000.
Gagliano, Joseph: *See*—
  Benore, Randolph C.; Gagliano, Joseph; Gibson, Shawn; Grosswiller, Leo J.; McGeorge, Gram; and Neidlinger, Donald, 5,701,828, Cl. 109-56.000.
Gagnebien, Didier: *See*—
  Afriat, Isabelle; and Gagnebien, Didier, 5,703,041, Cl. 514-2.000.
Gailus, Mark W.: *See*—
  Provencher, Daniel B.; Stokoe, Philip T.; and Gailus, Mark W., 5,702,258, Cl. 439-79.000.
Galan, Adam Antoni: *See*—
  Gaeta, Federico C. A.; Galan, Adam Antoni; and Stracker, Elaine C., 5,703,116, Cl. 514-443.000.
Galey, Jean Baptiste; and Dumats, Jacqueline, to L'Oreal. Use of N-arylmethylene, ethylenediaminetriacetates, N-arymethylene iminodiacetates or N,N'-diarylmethylene ethylenediamineacetates against oxidative stress. 5,703,095, Cl. 514-332.000.
Gallant, Chantal: *See*—
  Erilli, Rita; Gallant, Chantal; and Lysy, Regis, 5,703,028, Cl. 510-236.000.
Gallatin, W. Michael: *See*—
  Kilgannon, Patrick D.; and Gallatin, W. Michael, 5,702,917, Cl. 435-69.100.
Gallegos, Carlos R. Party wheel. 5,702,284, Cl. 446-475.000.
Gallemore, William E., II, to National Banner Company, Inc. Bracket apparatus. 5,702,081, Cl. 248-218.400.
Galli, Stephen J.: *See*—
  Sharpe, Richard J.; Arndt, Kenneth A.; Galli, Stephen J.; Meltzer, Peter C.; Razdan, Raj K.; and Sard, Howard P., 5,703,088, Cl. 514-278.000.
Galloway, George G.; and Siglinger, Paul R., to Industrial Technology, Inc. Probe for sampling differential electromagnetic fields. 5,703,928, Cl. 379-21.000.
Galloway, Lawrence W.: *See*—
  Pavur, Carol P.; Harper, Dennis; Bonnell, Steven W.; Norkus, James F.; Hartery, William F.; and Galloway, Lawrence W., 5,702,133, Cl. 292-80.000.
Gamboni, Claudio: *See*—
  Stahl, Peter Heinrich; and Gamboni, Claudio, 5,702,724, Cl. 424-465.000.
Gammill, Ronald B.; Judge, Thomas M.; and Morris, Joel, to Pharmacia & Upjohn Company. Antiatherosclerotic and antithrombotic 1-benzopyran-4-ones and 2-amino-1,3-benzoxazine-4-ones. 5,703,075, Cl. 514-233.500.
Gamou, Takaharu: *See*—
  Yasumoto, Eiichi; Hatoh, Kazuhito; and Gamou, Takaharu, 5,702,838, Cl. 429-40.000.
Gamow, Rustem Igor: *See*—
  Herr, Hugh M.; and Gamow, Rustem Igor, 5,701,686, Cl. 36-27.000.
Ganguly, Ashit K.: *See*—
  Saksena, Anil K.; Girijavallabhan, Viyyoor M.; Lovey, Raymond G.; Pike, Russell E.; Wang, Haiyan; Liu, Yi-Tsung; Ganguly, Ashit K.; and Bennett, Frank, 5,703,079, Cl. 514-252.000.
  Saksena, Anil K.; Girijavallabhan, Viyyoor M.; Lovey, Raymond G.; Pike, Russell E.; Wang, Haiyan; Liu, Yi-Tsung; Ganguly, Ashit K.; and Bennett, Frank, 5,703,236, Cl. 544-366.000.
Gano, John C.: *See*—
  Kilgore, Marion D.; and Gano, John C., 5,701,954, Cl. 166-119.000.
Ganss, Werner: *See*—
  Weigand, Michael; Ganss, Werner; and Grehn, Martin, 5,702,187, Cl. 384-551.000.
Gantioler, Josef-Matthias; Heil, Holger; and Tihanyi, Jenoe, to Siemens Aktiengesellschaft. Circuit configuration for monitoring the temperature of a power semiconductor component. 5,703,521, Cl. 327-512.000.
Gantz, Ira: *See*—
  Yamada, Tadataka; and Gantz, Ira, 5,703,220, Cl. 536-23.500.
Garcia, Glenn M.; and Diller, Robert E., to TNT Tools, Inc. Tile setter's measuring tool. 5,701,680, Cl. 33-526.000.
Gardner, Cynthia M.; Stone, Robert E.; Duffy, John D.; Allen, William E.; and Schimpf, James E., to Catepillar Inc. Method and apparatus for controlling an implement of a work machine. 5,701,793, Cl. 91-361.000.
Gardner, William R., to QUALCOMM Incorporated. Sensitivity weighted vector quantization of line spectral pair frequencies. 5,704,001, Cl. 395-2.280.
Garrett, David L.: *See*—
  Mahone, William C.; Chandler, Bruce D.; Killeen, Joseph P.; and Garrett, David L., 5,702,205, Cl. 405-169.000.
Garrison, Gina: *See*—
  Brunelli, Thad; Garrison, Gina; and Van Buren, Wade, 5,702,292, Cl. 451-41.000.
Garrison, Robert L.: *See*—
  Sidwell, Steven C.; English, George J.; Garrison, Robert L.; and Johnson, Ralph J., 5,702,179, Cl. 362-255.000.
Garst, Michael E.: *See*—
  Burke, James A.; Garst, Michael E.; and Wheeler, Larry A., 5,703,077, Cl. 514-249.000.

Garvey, David S.; Letts, L. Gordon; Renfroe, H. Burt; and Tam, Sang William, to NitroMed, Inc. Compositions and methods to prevent toxicity induced by nonsteroidal antiinflammatory drugs. 5,703,073, Cl. 514-226.500.
Gascoyne, David G.: *See*—
  Gordon, Janet L.; and Gascoyne, David G., 5,703,197, Cl. 528-201.000.
Gascoyne, John M.: *See*—
  Frost, Jonathan C.; Gascoyne, John M.; Hards, Graham A.; Wilkinson, David P.; and Prater, Keith B., 5,702,839, Cl. 429-42.000.
Gasmena, Roland L., to Ameron International Corporation. Heat ablative coating composition. 5,703,178, Cl. 525-476.000.
Gatter, Erich: *See*—
  Crass, Gerhard; and Gatter, Erich, 5,703,029, Cl. 510-242.000.
Gaubatz, Ulrich: *See*—
  Das, Chandan; Gaubatz, Ulrich; and Gottwald, Erich, 5,703,708, Cl. 359-140.000.
Gaudet, Michael N.: *See*—
  Gronbeck, Dana A.; O'Connell, Kathleen M.; Burke, William Andrew; Gaudet, Michael N.; and Caporale, Stefan J., 5,702,611, Cl. 210-606.000.
Gaul, Norbert, to Leica Mikroskopie und Systeme GmbH. Device for stabilizing the focus of a microscope. 5,703,715, Cl. 359-392.000.
Gauselmann, Michael, to Atronic Casino Technology Distribution GmbH. Gambling machine with display means for the display of symbols. 5,702,302, Cl. 463-20.000.
Gavin, Patrick M.: *See*—
  Pellegrin, Michael T.; Gavin, Patrick M.; Ault, Patrick L.; Loftus, James E.; Haines, Randall M.; and Morris, Virgil, 5,702,658, Cl. 264-172.140.
Gavrel, Gerard Michel: *See*—
  Birch, Stephen Michael; Gavrel, Gerard Michel; and Memon, Zaffar Iqbal, 5,701,667, Cl. 29-852.000.
Gay Freres S.A.: *See*—
  Berney, Jean-Claude, 5,703,395, Cl. 257-681.000.
Gazda, Jan; Bal, Jagdeep; and Bland, Christopher J., to MicroClock Incorporated. Voltage-controlled crystal oscillator with extended range. 5,703,540, Cl. 331-16.000.
Gazda, Jan: *See*—
  Bland, Christopher J.; Gazda, Jan; and Olsen, Barry E., 5,703,537, Cl. 331-1.00A.
GBR Systems Corporation: *See*—
  Bakoledis, Andrew G., 5,702,097, Cl. 270-58.060.
Geberit Technik AG: *See*—
  Juple, Pierre; and Haesler, Heinz, 5,702,596, Cl. 210-166.000.
Gebhard-Gray Associates: *See*—
  Gray, Donald J.; and Gebhard, Peter T. E., III, 5,702,535, Cl. 134-10.000.
Gebhard, Peter T. E., III: *See*—
  Gray, Donald J.; and Gebhard, Peter T. E., III, 5,702,535, Cl. 134-10.000.
Geelhoed, Frans E. N., to U.S. Philips Corporation. Trolley intended for a medical apparatus and comprising wheels provided with a cable pusher. 5,702,117, Cl. 280-160.000.
Gehrer, Udo; Gibbels, Rolf; and Frenken, Heinz-Josef, to Dia Nielsen GmbH Zubehoer fuer Messtechnik. Ink container with a capillary action member. 5,703,633, Cl. 347-86.000.
Geiger, Dan: *See*—
  Heckerman, David E.; Geiger, Dan; and Chickering, David M., 5,704,018, Cl. 395-75.000.
Geile, Michael J.: *See*—
  Dapper, Mark J.; Carlin, Barry W.; and Geile, Michael J., 5,703,954, Cl. 381-15.000.
Geisenberger, Stefan, to Nokia Technology GmbH. System for cancelling sound waves. 5,703,337, Cl. 181-206.000.
Geisler, Joseph P., to Advanced Micro Devices, Inc. Apparatus and method for precharging a bus to an intermediate level. 5,703,501, Cl. 326-96.000.
Geisser, Albert: *See*—
  Kropf, Philipp Rolf; and Geisser, Albert, 5,702,480, Cl. 623-23.000.
Geissler, Ulrich C.: *See*—
  Giesler, Richard; Geissler, Ulrich C.; Stanford, Margaret E.; and Johnson, William E., 5,702,383, Cl. 604-409.000.
Gelardi, Anthony L.: *See*—
  O'Brien, Patrick J.; Thomas, Alvin; Rufo, George, Jr.; Durham, Larry; and Gelardi, Anthony L., 5,701,997, Cl. 206-308.100.
Gelmont, Mark; Bercovici, Joseph; and Oren, Jakob, to Bromine Compounds Ltd. Process for the preparation of 5-hydroxyisophtalic acids. 5,703,274, Cl. 562-475.000.
GelTex Pharmaceuticals: *See*—
  Mandeville, W. Harry, III; and Holmes-Farley, Stephen Randall, 5,702,696, Cl. 424-78.120.
GelTex Pharmaceuticals, Inc.: *See*—
  Mandeville, W. Harry, III; and Holmes-Farley, Stephen Randall, 5,703,188, Cl. 526-290.000.
Gema Volstatic AG: *See*—
  Mauchle, Felix, 5,702,209, Cl. 406-12.000.
Genentech, Inc,: *See*—
  Roos, Filip; and Schwall, Ralph, 5,703,048, Cl. 514-12.000.
Genentech, Inc.: *See*—
  Doerschuk, Claire M.; Fong, Sherman; Hebert, Caroline Alice; Kim, Kyung Jin; and Leong, Steven R., 5,702,946, Cl. 435-320.100.
  Rosenthal, Arnon, 5,702,906, Cl. 435-7.100.
General Dynamics Land Systems Inc.: *See*—
  Tidman, Derek A., 5,703,322, Cl. 102-440.000.
General Electric Company: *See*—
  Devitt, John W.; Edwards, Thomas R.; and Bantel, Thomas E., 5,703,362, Cl. 250-341.800.
  Eckels, Phillip William; and Woods, Daniel C., 5,701,742, Cl. 62-6.000.
  Eckels, Phillip William; Sato, Kazuhiko; Woods, Daniel Christian; Ward, Granville Geer; Hayworth, Gregory Farin; and King, Christopher G., 5,701,744, Cl. 62-47.100.
  Farkas, David Michael; and Lutz, Daniel Reese, 5,703,371, Cl. 250-390.020.
  Kachmarik, David J.; Soules, Thomas F.; Fillion, Raymond A.; Steinbrenner, Erwin G.; and Kuk, Donald W., 5,703,440, Cl. 315-56.000.
  Kraft, Robert E.; and Syed, Asif A., 5,702,230, Cl. 415-119.000.
  Larson, Richard L.; Selby, Stephen E.; and Enger, Michael P., 5,702,676, Cl. 423-261.000.
  Lewis, Eric A.; and Slater, Robert H., 5,701,733, Cl. 60-39.310.
  Nerone, Louis R., 5,703,439, Cl. 315-209.00R.
  Steigerwald, Robert Louis; Saj, Chester Frank; and Stevanovic, Ljubisa Dragoljub, 5,703,441, Cl. 315-307.000.
  Wojnarowski, Robert John; and Gorczyca, Thomas Bert, 5,703,400, Cl. 257-723.000.
General Hospital Corporation, The: *See*—
  Wands, Jack R.; and Takahashi, Hiroshi, 5,703,213, Cl. 530-388.850.
General Housewares Corp.: *See*—
  Kennedy, Timothy J.; Stowell, Davin; and Bolden, Scott, 5,702,061, Cl. 241-93.000.
General Instrument Corporation of Delaware: *See*—
  Heegard, Chris; King, Andrew J.; Lovely, Sydney; and Kolze, Thomas J., 5,703,887, Cl. 371-42.000.
  Nuber, Ray; Moroney, Paul; and Walker, G. Kent, 5,703,877, Cl. 370-395.000.
General Motors Corporation: *See*—
  Fulks, Gary Chris; and Cornwell, William Dale, Jr., 5,703,748, Cl. 361-153.000.
  Pawlak, Andrzej Marian; and Leung, Chi Hung, 5,703,550, Cl. 335-78.000.
General Signal Corporation: *See*—
  Weng, Chuan, 5,702,632, Cl. 252-67.000.
General Surgical Innovations, Inc.: *See*—
  Hermann, George D., 5,702,417, Cl. 606-194.000.
Genetech, Inc.: *See*—
  Goeddel, David V.; Kohr, William J.; Pennica, Diane; and Vehar, Gordon A., 5,702,938, Cl. 435-226.000.
Genetics Institute, Inc.: *See*—
  Celeste, Anthony J.; and Wozney, John M., 5,703,043, Cl. 514-12.000.
Genetronics, Inc.: *See*—
  Hofmann, Gunter A.; Gilbert, Richard A.; Hayakawa, Yasuhiko; Heller, Richard; and Jaroszeski, Mark J., 5,702,359, Cl. 604-20.000.
Geneva Group of Companies, Inc.: *See*—
  Thiessen, Jeffrey S.; Enga, John M.; and Gonzalez, Hector F., 5,703,742, Cl. 360-132.000.
Genral Surgical Innovations, Inc.: *See*—
  Kieturakis, Maciej J.; Mollenauer, Kenneth H.; Monfort, Michelle Y.; and Kayan, Helmut L., 5,702,416, Cl. 606-193.000.
Georgakos, Georg: *See*—
  Nebel, Gerhard; Georgakos, Georg; and Kleine, Ulrich, 5,703,533, Cl. 330-253.000.
George, Jonel; Glassen, Steven Gardner; Krygowski, Matthew Anthony; Kim, Moon Ju; Preston, Allen Herman; and Stucki, David Emmett, to International Business Machines Corporation. Dynamic Reconfiguration of main storage and expanded storage by means of a service call logical processor. 5,704,055, Cl. 395-402.000.
Gerber, Matthias: *See*—
  Baumann, Ernst; Rheinheimer, Joachim; Vogelbacher, Uwe Josef; Bratz, Matthias; Theobald, Hans; Gerber, Matthias; Westphalen, Karl-Otto; Walter, Helmut; and Rademacher, Wilhelm, 5,703,017, Cl. 504-227.000.
Gerdes, Kenn Axo: *See*—
  Molin, Søren; Andersson, Poul Kirketerp; Gerdes, Kenn Axo; and Klemm, Per, 5,702,916, Cl. 435-69.100.
Gerger Garment Technology, Inc.: *See*—
  Martell, Charles R.; Cassidy, Michael J.; Ramsey, Anita K.; Liu, Zih-Fang; Ting, Chou Ling; and McKellar, H. Anderson, 5,703,781, Cl. 364-470.000.
Gerhards, Bernhard; Krutt, Hans-Jürgen; and Thissen, Wilhelm, to Uniroyal Englebert Reifen GmbH. Device for testing non-uniform wear on tread strips of pneumatic vehicle tires. 5,703,284, Cl. 73-146.000.
Gerlach, C. Richard, to RHI Joint Venture. Hydraulic motor with pressure compensated end plates. 5,702,243, Cl. 418-132.000.
Geron Corporation: *See*—
  Gaeta, Federico C. A.; Galan, Adam Antoni; and Stracker, Elaine C., 5,703,116, Cl. 514-443.000.
Geroux, Laurence: *See*—
  Legay, Thierry; Bonnet, Jean-Luc; and Geroux, Laurence, 5,702,424, Cl. 601-9.000.
Gershen, Bernard; Krajci, Edward; and Neiger, Benjamin, to Leviton Manufacturing Co., Inc. Capacitor-type motor speed controller. 5,703,458, Cl. 318-799.000.
Gerstel, Eberhard. Gas chromatography transfer line. 5,702,671, Cl. 422-103.000.
Gerver, Michael Jonathan: *See*—

Bushko, Dariusz Antoni; Avakian, Kevin Michael; Johnson, Bruce Graham; and Gerver, Michael Jonathan, 5,703,553, Cl. 335-215.000.
Gerwing, David H.: *See—*
Paterick-Smith, Garril J.; and Gerwing, David H., 5,702,074, Cl. 246-428.000.
Getman, Daniel P.: *See—*
Talley, John J.; Getman, Daniel P.; Lin, Ko-Chung; DeCrescenzo, Gary A.; Rogier, Donald J., Jr.; and Freskos, John N., 5,703,076, Cl. 514-237.500.
Geyer, Freddy; Vezain, Gérard; and Roux, Christian, to Aerospatiale Societe Nationale Industrielle. Unlockable connection device. 5,702,069, Cl. 244-161.000.
Ghaffaripour, Parviz; Kalb, Arthur J.; Johnson, Nick M.; and Ting, Sai L., to National Semiconductor Corporation. Amplifier circuit with reduced DC power related transients. 5,703,529, Cl. 330-51.000.
Gharpure, Milind Moreshwar: *See—*
Kingston, David G. I.; Chaudhary, Ashok Gopal; Gharpure, Milind Moreshwar; Rimoldi, John Matthew; and Gunatilaka, A. A. Leslie, 5,703,247, Cl. 548-962.000.
Ghibaudo, Jose A., to Amrep, Inc. Boomless automated side loader for refuse collection vehicle having lift arm with non-extendable upper end. 5,702,225, Cl. 414-408.000.
Ghiraldi, Alberto, to N.R. Development Limited. Container for fast refrigeration and preservation of milk. 5,701,756, Cl. 62-438.000.
Ghirardi, Frédéric; Mersali, Boumédienne; Bruno, Adrien; and Giraudet, Louis, to France Telecom. Opto-electronic semiconductor device including an integrated mode transformer. 5,703,895, Cl. 372-50.000.
Ghisler, Walter, to Telefonaktiebolaget LM Ericsson (publ.). Method and arrangement for establishing a connection in a telecommunications system. 5,703,933, Cl. 379-58.000.
Ghosh, Syamal K.: *See—*
Jarrold, Gregory S.; Chatterjee, Dilip K.; and Ghosh, Syamal K., 5,702,766, Cl. 427-376.100.
Gibbels, Rolf: *See—*
Gehrer, Udo; Gibbels, Rolf; and Frenken, Heinz-Josef, 5,703,633, Cl. 347-86.000.
Gibbs, Stephen R.: *See—*
Houck, Andrew W.; and Gibbs, Stephen R., 5,703,774, Cl. 364-424.060.
Giblin, Gerard Martin Paul: *See—*
Armour, Duncan Robert; Evans, Brian; Middlemiss, David; Naylor, Alan; Pegg, Neil Anthony; Vinader, Maria Victoria; Giblin, Gerard Martin Paul; Hubbard, Tania; Hann, Michael Menteith; Lewell, Xiao-Qing; and Watson, Stephen Paul, 5,703,240, Cl. 546-210.000.
Gibson, Shawn: *See—*
Benore, Randolph C.; Gagliano, Joseph; Gibson, Shawn; Grosswiller, Leo J.; McGeorge, Gram; and Neidlinger, Donald, 5,701,828, Cl. 109-56.000.
Gibson, Stephen P.: *See—*
Dutton, Christopher J.; Gibson, Stephen P.; and Lee, Shih-Jen E., 5,702,924, Cl. 435-78.000.
Giesler, Richard; Geissler, Ulrich C.; Stanford, Margaret E.; and Johnson, William E., to Baxter International Inc. Blood component collection systems and methods using an integral sampling device. 5,702,383, Cl. 604-409.000.
Gifford, Hanson S., III: *See—*
Stevens, John H.; Sterman, Wesley D.; Gifford, Hanson S., III; and Machold, Timothy R., 5,702,368, Cl. 604-171.000.
Gigatek Memory Systems: *See—*
Badour, Leonard C.; Stebe, Robert F.; and Haller, John L., 5,702,065, Cl. 242-342.000.
Wrobel, Andrew; and Badour, Leonard C., 5,703,741, Cl. 360-132.000.
Giglia, Salvatore: *See—*
Bikson, Benjamin; Giglia, Salvatore; Nicholas, Patrick Samuel, Jr.; and Ford, Cheryl Ann, 5,702,601, Cl. 210-321.790.
Gilbert, Carl: *See—*
Lamm, Joe; and Gilbert, Carl, 5,703,585, Cl. 341-141.000.
Gilbert, Richard A.: *See—*
Hofmann, Gunter A.; Gilbert, Richard A.; Hayakawa, Yasuhiko; Heller, Richard; and Jaroszeski, Mark J., 5,702,359, Cl. 604-20.000.
Giles, Joseph M.; Bennington, William; and Brucker, Steven, to Selig Sealing Products, Inc. Closure seal for container. 5,702,015, Cl. 215-232.000.
Giles, Lyle T., to Livernois Research & Development Company. System and method for controlling movement of a transfer system. 5,701,781, Cl. 72-405.120.
Gill, Bennie C.: *See—*
Walker, Jerry L.; Lawson, James P.; and Gill, Bennie C., 5,701,964, Cl. 175-4.600.
Gill, Jasbir S., to Calgon Corporation. Aqueous system containing a synergistic combination including polyether polyamino methylene phosphates for controlling calcium carbonate and calcium phosphate scale. 5,702,634, Cl. 252-180.000.
Gillette Company, The: *See—*
Causton, Brian Edward; and Alexiou, Michael, 5,702,513, Cl. 106-31.930.
Wilson, Robert; Beesley, Laurence Robert; and Flanagan, Robert H., 5,701,788, Cl. 76-104.100.
Gillette, Richard A.: *See—*
McKibben, Kenneth D.; Gould, Alan P.; Wuepper, Thomas E.; Minor, Daniel D.; Salgat, Mark T.; Marthaler, David; Speaks, Jackie M.; Macheske, Robert L.; Good, David; Gillette, Richard A.; Bond, Philip L.; Coyle, Donald C.; Rentfrow, Darrell; Stiens, Thomas O.; and Stevens, Larry M., 5,701,945, Cl. 164-130.000.
Gillig, Steven Frederick; and Kosiec, Jeannie Han, to Motorola, Inc. Apparatus and method for controlling the loop bandwidth of a phase locked loop. 5,703,539, Cl. 331-16.000.
Gillis, Herbert Russell; Stanssens, Dirk; De Vos, Rik; Postema, Aaldrik Roelf; and Randall, David, to Imperial Chemical Industries plc. Polymeric foams. 5,703,136, Cl. 521-128.000.
Ginsburg, Alec: *See—*
Acres, John F.; Ginsburg, Alec; and Wiebenson, David, 5,702,304, Cl. 463-29.000.
Giraudet, Louis: *See—*
Ghirardi, Frédéric; Mersali, Boumédienne; Bruno, Adrien; and Giraudet, Louis, 5,703,895, Cl. 372-50.000.
Girijavallabhan, Viyyoor M.: *See—*
Saksena, Anil K.; Girijavallabhan, Viyyoor M.; Lovey, Raymond G.; Pike, Russell E.; Wang, Haiyan; Liu, Yi-Tsung; Ganguly, Ashit K.; and Bennett, Frank, 5,703,079, Cl. 514-252.000.
Saksena, Anil K.; Girijavallabhan, Viyyoor M.; Lovey, Raymond G.; Pike, Russell E.; Wang, Haiyan; Liu, Yi-Tsung; Ganguly, Ashit K.; and Bennett, Frank, 5,703,236, Cl. 544-366.000.
Girotti, Michael: *See—*
Kanjo, Wajih; Smith, Eric; Demoise, Thomas J.; Girotti, Michael; McCabe, Thomas; Fessler, Charles B.; and Natschke, Scott, 5,701,974, Cl. 188-1.11R.
Girrens, Nico: *See—*
Desgrandchamps, Francois; Eugene, Michel; Girrens, Nico; Muller, Fernand; and Spaniol, Sylvia, 5,701,746, Cl. 62-62.000.
Girten, Beverly E.: *See—*
Suto, Mark J.; Girten, Beverly E.; Houghten, Richard A.; Loullis, Costas C.; and Tuttle, Ronald R., 5,703,042, Cl. 514-8.000.
Gittinger, Andreas; Wulff, Claus; Haupt, Heinrich; and Idel, Karsten-Josef, to Bayer AG. Method for reprocessing aqueous extract solutions obtained in the production of PA 6 or copolyamide. 5,703,204, Cl. 528-486.000.
Givaudan-Roure (International) SA: *See—*
Bajgrowicz, Jerzy A., 5,703,250, Cl. 549-369.000.
Givens, Derrick: *See—*
Pothier, Albert; Marik, Gregory C.; and Givens, Derrick, 5,702,463, Cl. 623-20.000.
GKN Walterscheid GmbH: *See—*
Adamek, Wolfgang; Kretschmer, Horst; Entrup, Hubert Grosse; Nienhaus, Clemens; Herchenbach, Paul; Sarfert, Andreas; Kämpf, Klaus; and Schott, Wilhelm, 5,702,306, Cl. 464-172.000.
Gladden, Ernest L.: *See—*
Lucca, Frank J.; Sutula, Daniel P., Jr.; Dufrane, Ronald M.; and Gladden, Ernest L., 5,703,320, Cl. 102-275.700.
Glassberg, Paul R.: *See—*
Malofsky, Adam G.; Malofsky, Bernard M.; and Glassberg, Paul R., 5,702,120, Cl. 280-642.000.
Glassen, Steven Gardner: *See—*
George, Jonel; Glassen, Steven Gardner; Krygowski, Matthew Anthony; Kim, Moon Ju; Preston, Allen Herman; and Stucki, David Emmett, 5,704,055, Cl. 395-402.000.
Glaug, Frank Steven; Brunner, Michael Scott; Cochrane, Faith Eileen; Durrance, Debra Hartley; Olson, Christopher Peter; Schleinz, Robert Joseph; and Thiessen, Richard Harry, to Kimberly-Clark Worldwide, Inc. Toilet training aid providing a temperature and dimensional change sensation. 5,702,376, Cl. 604-361.000.
Glaxo Group Limited: *See—*
Armour, Duncan Robert; Evans, Brian; Middlemiss, David; Naylor, Alan; Pegg, Neil Anthony; Vinader, Maria Victoria; Giblin, Gerard Martin Paul; Hubbard, Tania; Hann, Michael Menteith; Lewell, Xiao-Qing; and Watson, Stephen Paul, 5,703,240, Cl. 546-210.000.
Glenville, Reginald Paul: *See—*
Ainsworth, Adam Kenneth; Glenville, Reginald Paul; and McLean, Iain Alan, 5,703,377, Cl. 250-559.450.
Glikmann, Kevin L. Three-dimensional word construction game of SCRABBLE. 5,702,105, Cl. 273-272.000.
Globe-Union Inc.: *See—*
Thomas, Brian J.; Slayton, Gerald D.; Heiman, Jerome R.; and Barnett, Rick, 5,702,841, Cl. 429-88.000.
Globespan Technologies, Inc.: *See—*
Langberg, Ehud, 5,703,904, Cl. 375-232.000.
Langberg, Ehud, 5,703,905, Cl. 375-232.000.
Glöckler, Rainer: *See—*
Kiener, Andreas; Roduit, Jean-Paul; and Glöckler, Rainer, 5,702,930, Cl. 435-122.000.
Glovatsky, Andrew Z.: *See—*
Goenka, Lakhi N.; Todd, Michael G.; and Glovatsky, Andrew Z., 5,702,584, Cl. 205-158.000.
Gobert, Jean: *See—*
Cessement, Eric; Bodson, Guy; and Gobert, Jean, 5,703,082, Cl. 514-255.000.
Goble, E. Marlowe; Luman, David P.; Chervitz, Alan; Story, C. Brad; and Gundlalpalli, Ramarao, to MedicineLodge, Inc. Ligament bone anchor and method for its use. 5,702,397, Cl. 606-72.000.
Godbey, Kristin: *See—*

Effing, Jochem; Gruhlke, Eberhard; Godbey, Kristin; and Welsing, Wolfgang, 5,702,720, Cl. 424-448.000.
Godbole, Sanjay Parushottam: *See—*
Wachtendorf, Paul Trigg; Godbole, Sanjay Parushottam; and Rinker, Jeffrey Earle, 5,703,268, Cl. 558-466.000.
Godlewski, Jane Ellen: *See—*
Randall, Jared Lynn; and Godlewski, Jane Ellen, 5,703,231, Cl. 540-200.000.
Goebel, Timothy R.: *See—*
Wannagot, Gary A.; Keepers, Curtis Brent; Goebel, Timothy R.; Cwiakala, James M., Jr.; and Connors, Clifford J., 5,703,354, Cl. 250-214.0VT.
Goeddel, David V.; Kohr, William J.; Pennica, Diane; and Vehar, Gordon A., to Genetech, Inc. Human tissue plasminogen activator. 5,702,938, Cl. 435-226.000.
Goenka, Lakhi N.; Todd, Michael G.; and Glovatsky, Andrew Z., to Ford Motor Company. Enhanced plating adhesion through the use of metallized fillers in plastic substrate. 5,702,584, Cl. 205-158.000.
Gogate, Uday S.; Agharkar, Shreeram N.; and Phusanti, Lawan, to Bristol-Myers Squibb Company. Stable injectable formulation of BMY-25067. 5,703,111, Cl. 514-410.000.
Goka, Kouichi: *See—*
Yokoi, Shinji; Nishida, Akira; Obata, Tokio; and Goka, Kouichi, 5,703,064, Cl. 514-80.000.
Goldberg, Robert, to Uresil Corporation. Carpal bone biaxially restrained prosthesis. 5,702,468, Cl. 623-21.000.
Goldblatt, Marc: *See—*
Nissim, Ofer; and Goldblatt, Marc, 5,702,085, Cl. 248-475.100.
Goldstar Co., Ltd.: *See—*
Jang, Dug Gyu, 5,702,016, Cl. 220-2.30A.
Goldstar Electron Co., Ltd.: *See—*
Kwon, Ki Jo, 5,703,505, Cl. 327-75.000.
Goldstein, Allan L.; and Wang, Su Sun, to Viral Technologies, Inc. Diagnostic method and test kit for the serological detection of the AIDS virus. 5,702,707, Cl. 424-208.100.
Goldstein, Arthur L.; Papastavros, Theodore G.; and Richard, Emery J., to Ionics, Incorporated. Multi-port multi-stream valve apparatus. 5,702,582, Cl. 204-632.000.
Golinelli, Elena: *See—*
Perini, Umberto; Martinelli, Paolo; Golinelli, Elena; Musazzi, Sergio; Trespidi, Franco; and Pintus, Nice, 5,703,690, Cl. 356-436.000.
Gollner, Wilhelm; and Maiers, Manfred, to Sauer Inc. Hydrostatic drive with data carrier control. 5,703,345, Cl. 235-384.000.
Goncalves, Antonin, to L'Oreal. Combination of a row of containers and a strip of caps, and assembly of a container and cap. 5,702,017, Cl. 220-23.400.
Gonella, Mario; and Caeran, Francesco, to Nordica S.p.A. Braking device particularly for skates. 5,702,113, Cl. 280-11.200.
Gonzalez, Hector F.: *See—*
Thiessen, Jeffrey S.; Enga, John M.; and Gonzalez, Hector F., 5,703,742, Cl. 360-132.000.
Good, David: *See—*
McKibben, Kenneth D.; Gould, Alan P.; Wuepper, Thomas E.; Minor, Daniel D.; Salgat, Mark T.; Marthaler, David; Speaks, Jackie M.; Macheske, Robert L.; Good, David; Gillette, Richard A.; Bond, Philip L.; Coyle, Donald C.; Rentfrow, Darrell; Stiens, Thomas O.; and Stevens, Larry M., 5,701,945, Cl. 164-130.000.
Goodson, David B.; and McRuer, Robert N., to Thermal Energy Systems, Incorporated. Apparatus and method for reducing particulate emissions from combustion processes. 5,702,244, Cl. 431-2.000.
Goodstein, Mark B.: *See—*
Liebke, William R.; Dawson, David R.; Fredette, Mark A.; and Goodstein, Mark B., 5,702,288, Cl. 451-36.000.
Goodwell International Limited: *See—*
Hansen, Reinhard; Widdison, Leon; and Wurm, Wolfgang, 5,701,689, Cl. 36-115.000.
Goodwin, Jeremy Philip: *See—*
Allen, Wade C.; Goodwin, Jeremy Philip; Nielsen, Robert Louis; Reder, Paul Joseph; and Toltzman, Douglas, 5,704,041, Cl. 395-200.150.
Goodyear Tire & Rubber Company, The: *See—*
Dunn, William Frank; Maloney, John Michael; Hooper, Michael Lynn; and Maas, Wayne David, 5,703,680, Cl. 356-35.500.
Goovaerts, Luc: *See—*
Doumen, Achille Jules Edmond; Goovaerts, Luc; and Vega, Jose Luis, 5,703,037, Cl. 510-444.000.
Gorbics, Mark S.; Roberts, Keith M.; and Sumner, Richard L., to LeCroy Corporation. Vernier delay line interpolator and coarse counter realignment. 5,703,838, Cl. 368-120.000.
Gorczyca, Thomas Bert: *See—*
Wojnarowski, Robert John; and Gorczyca, Thomas Bert, 5,703,400, Cl. 257-723.000.
Gorda, Keith Raymond: *See—*
Cusumano, Joseph Victor; Diana, William Daniel; Emert, Jacob; Gorda, Keith Raymond; Schlosberg, Richard H.; Young, David A.; Yezrielev, Albert I.; Eckstrom, William Bernard; Manry, Edris Eileen; and Keenan, Michael John, 5,703,256, Cl. 554-224.000.
Gorday, Paul Edward; Gorday, Xuan-Khanh Tran; and Satyamurti, Sunil, to Motorola, Inc. Method and apparatus for indicating undelivered messages in a communication device. 5,703,570, Cl. 340-825.440.
Gorday, Xuan-Khanh Tran: *See—*
Gorday, Paul Edward; Gorday, Xuan-Khanh Tran; and Satyamurti, Sunil, 5,703,570, Cl. 340-825.440.
Gordon, Janet L.; and Gascoyne, David G., to Molecular OptoElectronics Corporation. Indane polycarbonates. 5,703,197, Cl. 528-201.000.
Goro S. A.: *See—*
Schick, Jean-François, 5,701,638, Cl. 24-33.00P.
Gorski, Jack A.: *See—*
Baxter-Lowe, Lee Ann; and Gorski, Jack A., 5,702,885, Cl. 435-6.000.
Gose, Mark Wendell: *See—*
Dikeman, John Mark; and Gose, Mark Wendell, 5,703,520, Cl. 327-439.000.
Goss, Louis. Skin conditioner. 5,702,714, Cl. 424-401.000.
Gosset, Serge: *See—*
Dehennau, Claude; Depireux, Thierry; Fleche, Guy; Gosset, Serge; and Videau, Didier, 5,703,160, Cl. 525-54.240.
Gostomski, John Francis: *See—*
Ethington, Bryan Leslie; Gostomski, John Francis; Minnick, Jeffrey Alan; and Songer, Christopher Mark, 5,704,022, Cl. 395-115.000.
Goto, Shinichi; Kobayashi, Masao; Kuzuya, Yasuhisa; and Ichikawa, Hidehito, to Toyoda Gosei Co., Ltd. Two layer extrusion molding. 5,702,782, Cl. 428-31.000.
Goto, Shuichi; Tanaka, Kenichi; and Odaka, Hiroshi, to Idemitsu Petrochemical Co., Ltd. Snap-fastener bag. 5,701,996, Cl. 206-287.000.
Goto, Yasuyuki: *See—*
Haseba, Yasuhiro; Miyazawa, Kazutoshi; Matsui, Shuichi; Kondo, Tomoyuki; Goto, Yasuyuki; Nakagawa, Etsuo; and Sawada, Shinichi, 5,702,641, Cl. 252-299.630.
Goto, Yukie: *See—*
Mori, Tsutomu; Fujimoto, Makoto; Goto, Yukie; and Egusa, Yo, 5,703,644, Cl. 348-363.000.
Gotoh, Kohtaroh, to Fujitsu Limited. Sense amplifier driving circuit. 5,703,819, Cl. 365-203.000.
Göttel, Otto: *See—*
Fryberg, Mario; Göttel, Otto; and Stauner, Thomas, 5,702,866, Cl. 430-264.000.
Gottlieb, Robert K.; Grossman, Richard A.; Ifkovits, Michael R.; and Ruess, Philip G., to Pitney Bowes Inc. Envelope closing and sealing apparatus. 5,702,098, Cl. 270-58.060.
Gottshall, Paul C.; and Young, Paul M., to Caterpillar Inc. Programmable fuel injector current waveform control and method of operating same. 5,701,870, Cl. 123-490.000.
Gottwald, Erich: *See—*
Das, Chandan; Gaubatz, Ulrich; and Gottwald, Erich, 5,703,708, Cl. 359-140.000.
Goulait, David J. K.: *See—*
Huber, Michael T.; Cabell, David W.; Jezek, Robert J., Sr.; and Goulait, David J. K., 5,702,551, Cl. 156-73.100.
Gould, Alan P.: *See—*
McKibben, Kenneth D.; Gould, Alan P.; Wuepper, Thomas E.; Minor, Daniel D.; Salgat, Mark T.; Marthaler, David; Speaks, Jackie M.; Macheske, Robert L.; Good, David; Gillette, Richard A.; Bond, Philip L.; Coyle, Donald C.; Rentfrow, Darrell; Stiens, Thomas O.; and Stevens, Larry M., 5,701,945, Cl. 164-130.000.
Gould, Scott Whitney; Furtek, Frederick Curtis; Keyser, Frank Ray, III; Worth, Brian A.; and Zittritsch, Terrance John, to International Business Machines Corporation; and Atmel Corporation. Programmable array clock/reset resource. 5,703,498, Cl. 326-40.000.
Goymann, Volkmar; Anapliotis, Emmanuel; and Darga, Juergen, to BIOMET Deutschland GmbH. Endoprosthesis. 5,702,484, Cl. 623-23.000.
GPT Limited: *See—*
Proctor, Richard John; Jeffrey, Mark Timothy; and Maddern, Thomas Slade, 5,703,879, Cl. 370-398.000.
Grabovac, Bosko, to Consolidated Devices, Inc. Torque tool tester machine. 5,703,277, Cl. 73-1.120.
Gracheck, Stephen Joseph: *See—*
Connor, David Thomas; and Gracheck, Stephen Joseph, 5,703,069, Cl. 514-211.000.
Graf, Ralph Armin, to Graf+Cie AG Kratzen- und Maschinenfabrik. Sawtooth wire for all-steel clothing. 5,701,637, Cl. 19-114.000.
Graf+Cie AG Kratzen- und Maschinenfabrik: *See—*
Graf, Ralph Armin, 5,701,637, Cl. 19-114.000.
Graham, Samuel L.: *See—*
deSolms, S. Jane; and Graham, Samuel L., 5,703,241, Cl. 548-314.700.
Granberg, Rune, to AB Rexroth Mecman. Plural rotary actuators. 5,701,799, Cl. 92-125.000.
Grano, Lars, to Grano Maleri & Dekor AB. Portable ventilation system. 5,702,296, Cl. 454-200.000.
Grano Maleri & Dekor AB: *See—*
Grano, Lars, 5,702,296, Cl. 454-200.000.
Graphtec Corporation: *See—*
Fujiwara, Yuichi; Nakagawa, Chikao; Ito, Hiromi; and Kobayashi, Yoshinori, 5,701,816, Cl. 101-128.400.
Watanabe, Toshiya; Noguchi, Masatoshi; Toyosawa, Takeshi; and Morita, Minoru, 5,702,188, Cl. 400-120.050.
Grassi, Gino: *See—*
Alcidi, Paolo; and Grassi, Gino, 5,701,906, Cl. 128-696.000.
Grasso, Massimo: *See—*
Merlo, Mauro; Cocetta, Franco; Marchió , Fabio; Grasso, Massimo; and Murari, Bruno, 5,703,476, Cl. 323-313.000.
Gray, Donald J.; and Gebhard, Peter T. E., III, to Gebhard-Gray Associates. Dry cleaning and degreasing system. 5,702,535, Cl. 134-10.000.

Green Cross Corporation, The: *See—*
Takata, Asami; Numata, Shoko; Mizukami, Yuichi; Sekiyama, Yasushi; and Takahashi, Masato, 5,703,124, Cl. 514-514.000.
Green, Edward Francis. Apparatus method for sterilization using ethylene oxide. 5,702,669, Cl. 422-30.000.
Greene, Jeffrey M.: *See—*
Tarter, Fred B.; Greene, Jeffrey M.; De Fazio, Thomas J.; Peck, Jan; Wylie, L. Stephen; Magnotte, Mark M.; Hall, Del; and Tarter, Scott A., 5,704,044, Cl. 395-204.000.
Greene, Mark I.; and Davis, James G., to University of Pennsylvania, The Trustees of the. Saccular collagen and compositions and methods for making and using the same. 5,702,948, Cl. 435-348.000.
Greening, Anthony B.; and Mitchell, Thomas N., to International Telepresence Corporation. Stereophonic system for minimally invasive surgery. 5,701,912, Cl. 128-773.000.
Greff, Richard: *See—*
Evans, Scott; Perl, John, II; and Greff, Richard, 5,702,361, Cl. 604-53.000.
Gregg, William Michael: *See—*
Martin, Phillip Charles; Shumate, Monroe W.; and Gregg, William Michael, 5,703,147, Cl. 523-212.000.
Grehn, Martin: *See—*
Weigand, Michael; Ganss, Werner; and Grehn, Martin, 5,702,187, Cl. 384-551.000.
Greif Bros. Corporation: *See—*
Robichaud, Ronald T., 5,702,786, Cl. 428-35.700.
Grewal, Harsimran S.; and Yang, Lawrence R., to Sun Microsystems, Inc. Circuitry that detects a phase difference between a first, base, clock and a second, derivative, clock derived from the base clock. 5,703,502, Cl. 327-3.000.
Griffin, David. Multi-stage delivery system for ingestible medications or nutrients. 5,702,723, Cl. 424-463.000.
Griffin, David R.: *See—*
Moore, Michael A.; Griffin, David R.; and Dubose, Jeffery, 5,701,878, Cl. 124-67.000.
Griffin, Michael F.; and Pajan, James L., to Westinghouse Air Brake Company. Method of preventing wicking. 5,702,774, Cl. 427-598.000.
Griffith, George L.: *See—*
Weete, John D.; and Griffith, George L., 5,703,255, Cl. 554-83.000.
Griffith, John D., to Eastman Kodak Company. Reverse telephoto lens. 5,703,726, Cl. 359-753.000.
Griffiths, Anthony C. M.: *See—*
Ricciardi, Michael A.; and Griffiths, Anthony C. M., 5,702,652, Cl. 264-37.000.
Grimard, Jean Pierre, to Becton Dickinson France S.A. Vial having resealable membrane assembly activated by a medical delivery device. 5,702,019, Cl. 215-301.000.
Grinevitskii, Yurii Alexandrovich: *See—*
Levankovskii, Igor Anatolyevich; Grinevitskii, Yurii Alexandrovich; Shults, Victor Danilovich; and Alexandrov, Yurii Victorovich, 5,702,160, Cl. 299-111.000.
Grispart, Gerald Robert: *See—*
Boone, Joseph T.; Hillerich, Thomas Anthony, Jr.; Grispart, Gerald Robert; and Ydoate, Edward, 5,701,989, Cl. 198-448.000.
Groenhuis, Roelf A. J.: *See—*
van de Water, Peter W. M.; Groenhuis, Roelf A. J.; and Schriks, Cornelis G., 5,703,401, Cl. 257-727.000.
Groenke, Allen W., to Nellcor Puritan Bennett Incorporated. Olefin heat and moisture exchanger. 5,701,891, Cl. 128-205.290.
Gronbeck, Dana A.; O'Connell, Kathleen M.; Burke, William Andrew; Gaudet, Michael N.; and Caporale, Stefan J., to Shipley Company, L.L.C. Process for removing heavy metal ions by ion exchange. 5,702,611, Cl. 210-686.000.
Grossman, Paul David; Fung, Steven; Menchen, Steven Michael; Woo, Sam Lee; and Winn-Deen, Emily Susan, to Perkin-Elmer Corporation, The. Probe composition containing a binding domain and polymer chain and methods of use. 5,703,222, Cl. 536-24.300.
Grossman, Richard A.: *See—*
Gottlieb, Robert K.; Grossman, Richard A.; Ifkovits, Michael R.; and Ruess, Philip G., 5,702,098, Cl. 270-58.060.
Grosswiller, Leo J.: *See—*
Benore, Randolph C.; Gagliano, Joseph; Gibson, Shawn; Grosswiller, Leo J.; McGeorge, Gram; and Neidlinger, Donald, 5,701,828, Cl. 109-56.000.
Grote, Philip B.; and Sjostedt, Robbie J., to Stoughton Composites, Inc. Vehicle body including leakproof damage resistant wall construction. 5,702,151, Cl. 296-187.000.
Groundwater Control, Inc.: *See—*
Woodall, Weldon, 5,701,692, Cl. 37-353.000.
Groupe Lepine: *See—*
Pfaifer, Patrick, 5,702,393, Cl. 606-61.000.
Groves, Oliver J.; Jensen, Donald A.; Nelson, Thomas S.; and Thomas, Joel M., to Boeing Company, The. Composite stringer and skin panel assembly machine. 5,701,651, Cl. 29-281.500.
Gruenwald, Werner: *See—*
Dietz, Hermann; Gruenwald, Werner; De La Prieta, Claudio; Lindemann, Gert; Eisele, Ulrich; and Schmiedel, Carmen, 5,702,580, Cl. 204-426.000.
Gruhlke, Eberhard: *See—*
Effing, Jochem; Gruhlke, Eberhard; Godbey, Kristin; and Welsing, Wolfgang, 5,702,720, Cl. 424-448.000.
Grundei, Hans; Rudigier, Jürgen; and Weber, Christian, to ESKA Medical GmbH & Co. Finger joint. 5,702,471, Cl. 623-21.000.
Grundel, Louis George: *See—*
Tiller, Norman Andrew; and Grundel, Louis George, 5,702,780, Cl. 428-15.000.
Grundfest, Warren S.: *See—*
Shehada, Ramez E.; and Grundfest, Warren S., 5,701,900, Cl. 128-662.030.
Grüttner-Merten, Sabine: *See—*
Schefczik, Ernst; Grüttner-Merten, Sabine; Saling, Peter; Sens, Rüdiger; and Reichelt, Helmut, 5,703,238, Cl. 546-119.000.
GTE Mobile Communication Service: *See—*
Zicker, Robert G.; and Dion, John K., 5,703,934, Cl. 379-61.000.
Gu, Gong: *See—*
Forrest, Stephen R.; Thompson, Mark E.; Burrows, Paul E.; Bulovic, Vladimir; and Gu, Gong, 5,703,436, Cl. 313-506.000.
Guadagno, Philip A., to Helena Laboratories Corporation. Chromgen-reagent test system. 5,702,913, Cl. 435-28.000.
Guardiola-Lemaitre, Béatrice: *See—*
Lesieur, Daniel; Fourmaintraux, Eric; Depreux, Patrick; Delagrange, Philippe; Renard, Pierre; and Guardiola-Lemaitre, Béatrice, 5,703,121, Cl. 514-469.000.
Gubisch, Erwin: *See—*
Adler, Klaus; Gubisch, Erwin; and Sommerauer, Alois, 5,702,828, Cl. 428-540.000.
Gucker, Carl: *See—*
Smith, Daniel; Willis, Bernard M.; Marschke, Kenneth P., Jr.; Littlewood, Barry; Schoen, Vulgens; Gucker, Carl; Nordmeyer, Michael; and Miklewicz, Thaddeus, 5,701,656, Cl. 29-558.000.
Guess, Terrell M.: *See—*
Simmons, Scott C.; Pohl, John R.; Guess, Terrell M.; Rushing, Douglas A.; Caputo, Michael P., Jr.; and Billica, Roger D., 5,701,904, Cl. 128-670.000.
Gugger, Eric T.; and Dueppen, Daniel G., to Archer Daniels Midland Company. Production of isoflavone enriched fractions from soy protein extracts. 5,702,752, Cl. 426-634.000.
Guidi, Guido; Boezi, Giampaolo; and De Filippis, Pietro, to Bitron S.P.A. Relay with a movable assembly having a dampening effect. 5,703,549, Cl. 335-78.000.
Guillot, Christian: *See—*
Tournier, Hervé; Schneider, Michel; and Guillot, Christian, 5,702,722, Cl. 424-450.000.
Guipouy, Philippe: *See—*
Ehret, Philippe; Guipouy, Philippe; and Lahtenkorva, Kimmo, 5,702,826, Cl. 428-515.000.
Gulf Chemical & Metallurgical Corporation: *See—*
Llanos, Zenon R.; Provoost, Guido F.; Deering, William G.; and Debaene, Frans J., 5,702,500, Cl. 75-10.250.
Gulitz, Wolfgang: *See—*
Stoll, Alfred; Gulitz, Wolfgang; Tessari, Hans; and Eckhardt, Reiner, 5,702,068, Cl. 244-3.160.
Gunatilaka, A. A. Leslie: *See—*
Kingston, David G. I.; Chaudhary, Ashok Gopal; Gharpure, Milind Moreshwar; Rimoldi, John Matthew; and Gunatilaka, A. A. Leslie, 5,703,247, Cl. 548-962.000.
Gundlalpalli, Ramarao: *See—*
Goble, E. Marlowe; Luman, David P.; Chervitz, Alan; Story, C. Brad; and Gundlalpalli, Ramarao, 5,702,397, Cl. 606-72.000.
Gungor, Mehmet N.: *See—*
Whitlow, Graham A.; Gungor, Mehmet N.; and Lovic, William R., 5,701,993, Cl. 200-264.000.
Gunji, Shizuka, to Kabushiki Kaisha Toshiba. Computer having resume function. 5,704,040, Cl. 395-188.010.
Gunter, Charles E., to ABT, Inc. Apparatus for connecting and aligning frame member sections of a trench. 5,702,204, Cl. 405-119.000.
Gunther, John E.: *See—*
Yin, Khin Swe; Yu, Kevin; and Gunther, John E., 5,702,805, Cl. 428-195.000.
Gunze Limited: *See—*
Nishimura, Masayuki; Sogabe, Kiyoshi; Tanaka, Hiroyuki; and Arai, Shinji, 5,702,784, Cl. 428-34.900.
Guo, Ann, to Maxoptix Corporation. Method and apparatus for magneto-optical recording and reading using optimized laser powers. 5,703,865, Cl. 369-116.000.
Guo, Jeng-Jong. Minimum size integrated circuit static memory cell. 5,703,392, Cl. 257-392.000.
Guo, Yimin; Ju, Kochan; and Hsu, Yimin, to Headway Technologies, Inc. Method and test structure for determining magnetic domain switching field when fabricating patterned exchange biased magnetoresistive (MR) head. 5,703,485, Cl. 324-235.000.
Guo, Zong-Ru: *See—*
Han, Rui; and Guo, Zong-Ru, 5,703,130, Cl. 514-616.000.
Gupta, Amitava; Blum, Ronald D.; Iyer, Venkatramani S.; and Nagg, Paul J., to Innotech, Inc. Composite lenses. 5,702,819, Cl. 428-412.000.
Gutierrez, José Núñez. Staff or stick for recollecting organic waste from domestic animals such as dogs and cats. 5,702,137, Cl. 294-1.400.
Gutknecht, Heinz, to VMI Epe Holland B.V. Assembly of a loading means and a strip stacker. 5,701,717, Cl. 53-117.000.
Guy, Alain: *See—*

Foos, Jacques; Guy, Alain; Lemaire, Marc; Leclere, Bruno; Le Buzit, Gérard; and Doutreluingne, Pierre, 5,702,608, Cl. 210-668.000.
Guzinski, James A.; and Schulze, Mark H., to Kalamazoo Holdings, Inc. Preparation of a readily-dispersible hop extract for imparting hoppy aroma and flavor to beer using a lipase. 5,702,737, Cl. 426-33.000.
Guzzini, Virgilio; Montangero, Enrico; and Onori, Roberto, to Teuco Guzzini S.r.l. Hydromassage bathtub with wide-beam ultrasound emission devices. 5,702,353, Cl. 601-2.000.
Guzzino, Kim S.: *See—*
Shreve, Gregory A.; Guzzino, Kim S.; and Hulvey, Robert W., 5,703,656, Cl. 348-549.000.
GX Biosystems A/S: *See—*
Molin, Søren; Andersson, Poul Kirketerp; Gerdes, Kenn Axo; and Klemm, Per, 5,702,916, Cl. 435-69.100.
Gysi, Peter, to Elpatronic AG. Container inspection apparatus. 5,703,300, Cl. 73-863.910.
H. B. Fuller Licensing & Financing, Inc.: *See—*
Anderson, Carolyn M., 5,703,162, Cl. 525-89.000.
Duan, Youlu; Dochniak, Michael J.; and Stammler, Sonja, 5,703,158, Cl. 524-440.000.
H. Lundbeck A/S: *See—*
Perregaard, Jens Kristian; Moltzen, Ejner Knud; Andersen, Kim; Pedersen, Henrik; Bøgesø, Klaus Peter; Pernet, Andre; Bopp, Barbara; Mulford, Darcy; and Sakamoto, Kiyoshi, 5,703,087, Cl. 514-278.000.
Haarmann & Reimer GmbH: *See—*
Pelzer, Ralf; Surburg, Horst; and Hopp, Rudolf, 5,703,123, Cl. 514-512.000.
Hack, Michael G.; and Wu, I-Wei, to Xerox Corporation. Array having multiple channel structures with continuously doped interchannel regions. 5,703,382, Cl. 257-72.000.
Hackstie, Louis F.; and Clayton, Peter J., to Westinghouse Electric Corporation. Journal bearing with leading edge groove vent. 5,702,186, Cl. 384-117.000.
Hada, Kunihiko: *See—*
Mori, Yasutomo; Orihara, Motoi; Hada, Kunihiko; and Miyamoto, Shuji, 5,703,006, Cl. 503-207.000.
Haesler, Heinz: *See—*
Juple, Pierre; and Haesler, Heinz, 5,702,596, Cl. 210-166.000.
Haga, Masakazu: *See—*
Watanabe, Hiroshi; Hirata, Toichi; Haga, Masakazu; Yamagata, Eiji; Fujishima, Kazuo; and Adachi, Hiroyuki, 5,701,691, Cl. 37-348.000.
Haga, Takashi, to Sumitomo Heavy Industries Ltd. Method for machining a reduction or step-up gear. 5,701,671, Cl. 29-893.350.
Hagen, Donald F.; Fung, Simon S.; and Hansen, Paul E., to Minnesota Mining and Manufacturing Company. Sheet materials for solid phase extractions and solid phase reactions. 5,702,610, Cl. 210-670.000.
Hagiwara, Shigeki: *See—*
Mori, Akira; Hagiwara, Shigeki; and Tanaka, Hirokazu, 5,703,709, Cl. 359-196.000.
Hagiwara, Yasumasa; and Yatsuzuka, Shinichi, to Advanced Mobile Telecommunication Technology Inc. Pulse tube refrigerator. 5,701,743, Cl. 62-6.000.
Hahn, Norbert; and Bender, Brian, to Rite-Hite Corporation. Vehicle restraint. 5,702,223, Cl. 414-401.000.
Haines, Randall M.: *See—*
Pellegrin, Michael T.; Gavin, Patrick M.; Ault, Patrick L.; Loftus, James E.; Haines, Randall M.; and Morris, Virgil, 5,702,658, Cl. 264-172.140.
Hale, Kelly T. Pressure equalizing scuba diver mouthpiece and accessories. 5,701,885, Cl. 128-201.260.
Hales, Eric Charles, to Automotive Products, plc. Method and apparatus for making brake shoes. 5,701,655, Cl. 29-513.000.
Halfbrodt, Wolfgang: *See—*
Ottow, Eckhard; Schwede, Wolfgang; Halfbrodt, Wolfgang; Fritzemeier, Karl-Heinrich; and Krattenmacher, Rolf, 5,703,066, Cl. 514-173.000.
Hall, Barrie G.: *See—*
Russell, William E.; Hall, Barrie G.; and Medeiros, Fernando, 5,702,001, Cl. 206-388.000.
Hall, David K.; and Rae, Kit, to United Cutlery Corporation. Axe combination tool. 5,701,675, Cl. 30-123.000.
Hall, Del: *See—*
Tarter, Fred B.; Greene, Jeffrey M.; De Fazio, Thomas J.; Peck, Jan; Wylie, L. Stephen; Magnotte, Mark M.; Hall, Del; and Tarter, Scott A., 5,704,044, Cl. 395-204.000.
Hall, Jeffrey D. Grasping apparatus and method. 5,701,769, Cl. 70-19.000.
Hall, Malcolm G.; and Faulkner, Russell W. Smart orientation sensing circuit for remote control. 5,703,623, Cl. 345-158.000.
Haller, John L.: *See—*
Badour, Leonard C.; Stebe, Robert F.; and Haller, John L., 5,702,065, Cl. 242-342.000.
Halliburton Company: *See—*
Hushbeck, Donald F.; Yuan, Yusheng; and Davison, Douglas W., 5,701,959, Cl. 166-387.000.
Williamson, Dan; Mills, James A.; and Ryan, John J., III, 5,701,957, Cl. 166-297.000.
Halliburton Energy Services, Inc.: *See—*
Hardy, Mary Anne; and Isenberg, O. Marlene, 5,701,956, Cl. 166-295.000.
Kilgore, Marion D.; and Gano, John C., 5,701,954, Cl. 166-119.000.
Proett, Mark A.; Chin, Wilson C.; and Chen, Chih C., 5,703,286, Cl. 73-152.050.
Walker, Jerry L.; Lawson, James P.; and Gill, Bennie C., 5,701,964, Cl. 175-4.600.
Halsall, Philip S., to AlliedSignal, Inc. Turbochargers for internal combustion engines. 5,701,741, Cl. 60-602.000.
Hamacher, Peter: *See—*
Kerlin, Klaus Gunter; and Hamacher, Peter, 5,702,581, Cl. 204-486.000.
Hamada, Kenichi: *See—*
Izumi, Jun; Yasutake, Akinori; Tsutaya, Hiroyuki; Harada, Takayuki; and Hamada, Kenichi, 5,702,505, Cl. 95-115.000.
Hamada, Makoto: *See—*
Takahashi, Hiroyuki; Hamada, Makoto; Fujishima, Hiromichi; Naito, Masaaki; Sasaki, Kazuya; Tsuchiya, Jiro; and Maeda, Tomoharu, 5,702,123, Cl. 280-735.000.
Hamada, Nobuhiro: *See—*
Takahashi, Kazunori; Hamada, Nobuhiro; Takatoo, Masao; Nagai, Tohru; Suzuki, Toshiko; and Furukawa, Souichi, 5,703,778, Cl. 364-437.000.
Hamada, Satoshi, to NEC Corporation. In-line optical amplifier. 5,703,711, Cl. 359-341.000.
Hamaguchi, Takeyuki: *See—*
Endo, Takayoshi; Ishizaki, Kazuhisa; Yamada, Satoshi; and Hamaguchi, Takeyuki, 5,702,264, Cl. 439-346.000.
Hamahata, Toshihiro: *See—*
Ohtani, Yasuo; Kataho, Takuo; Satoh, Makoto; Tanaka, Tsutomu; Nose, Yoshimasa; Kobayashi, Kazuyoshi; Uchikawa, Tetsuhide; and Hamahata, Toshihiro, 5,703,901, Cl. 373-109.000.
Hamamatsu Photonics K.K.: *See—*
Mori, Shinsuke, 5,703,369, Cl. 250-363.030.
Nakamura, Takuya; Hirano, Isuke; Aoshima, Shinichiro; Takahashi, Hironori; and Urakami, Tsuneyuki, 5,703,491, Cl. 324-750.000.
Hamanaka, Nobuyuki; Takahashi, Kanji; and Tokumoto, Hidekado, to Ono Pharmaceutical Co., Ltd. Phenoxyacetic acid derivatives. 5,703,099, Cl. 514-540.000.
Hamilton, Stanley: *See—*
Vogelstein, Bert; Kinzler, Kenneth W.; and Hamilton, Stanley, 5,702,886, Cl. 435-6.000.
Hammel, Sherry E.: *See—*
O'Brien, Francis J., Jr.; Nguyen, Chung T.; and Hammel, Sherry E., 5,703,906, Cl. 375-316.000.
Han, Rui; and Guo, Zong-Ru, to Chinese Academy of Medical Sciences, Institute of Materia Medica, an Institute of the. Chalcone retinoids and methods of use of same. 5,703,130, Cl. 514-616.000.
Hanada, Shinichi; and Mukoyama, Koichiro, to Tanaka Denshi Kogyo Kabushiki Kaisha. Gold wire for bonding. 5,702,814, Cl. 428-364.000.
Hanagama, Yasuko: *See—*
Nakamura, Toyokazu; Hanagama, Yasuko; Tsujide, Tohru; and Morohashi, Kenji, 5,703,492, Cl. 324-751.000.
Haney, Donald E. Sander with orbiting platen and abrasive. 5,702,287, Cl. 451-28.000.
Hanisch, Wolfgang H.; and Fernandes, Peter, to Cetus Corporation. Process for the recovery of lipophilic proteins. 5,702,699, Cl. 424-85.600.
Hankinson, Robert J.; and Spoerring, Otto, to Cirrus Logic, Inc. System and method for decoding a quadrature amplitude modulated signal. 5,703,660, Cl. 348-638.000.
Hann, Michael Menteith: *See—*
Armour, Duncan Robert; Evans, Brian; Middlemiss, David; Naylor, Alan; Pegg, Neil Anthony; Vinader, Maria Victoria; Giblin, Gerard Martin Paul; Hubbard, Tania; Hann, Michael Menteith; Lewell, Xiao-Qing; and Watson, Stephen Paul, 5,703,240, Cl. 546-210.000.
Hanna, Paul K., to Akzo Nobel nv. Catalyst for polymerization of polyketone formed by treatment with carbon monoxide and olefin. 5,703,201, Cl. 528-392.000.
Hanosek, Peter. Device for washing and drying printing plates. 5,701,820, Cl. 101-424.000.
Hansa Metallwerke AG: *See—*
Huber, Roland, 5,702,057, Cl. 239-288.300.
Hansen, Louis J., Jr.; Maligad, Luciano J., Jr.; and Powell, Douglas H., to Hunter Innovations. Interchangeable automatic control valve. 5,701,927, Cl. 137-271.000.
Hansen, Paul E.: *See—*
Hagen, Donald F.; Fung, Simon S.; and Hansen, Paul E., 5,702,610, Cl. 210-670.000.
Hansen, Peter D.; and Badavas, Paul C., to Foxboro Company, The. Method and apparatus for providing multivariable nonlinear control. 5,704,011, Cl. 395-22.000.
Hansen, Reinhard; Widdison, Leon; and Wurm, Wolfgang, to Goodwell International Limited. Snowboard boot. 5,701,689, Cl. 36-115.000.
Hanson, Marvin L.; McCoy, Richard; and Krager, Jon L., to Reese Products, Inc. Step bumper hitch with integral receiver box. 5,702,118, Cl. 280-491.500.
Hansson, Roy: *See—*
Widlund, Urban; and Hansson, Roy, 5,702,378, Cl. 604-373.000.
Hansson, Thomas W.; and Hopkins, Randall K., to HBM, Inc. Load measuring device with a load cell and method for introducing a load into the load cell. 5,703,334, Cl. 177-201.000.
HANWHA Chemical Corporation: *See—*
Kim, Sang-Keun; Kim, Seoung-Ho; Lee, Haeng-Woo; Choi, Cheol-Kyu; Kim, Jeong-Deuk; Hong, Jin-Who; Kim, Chang-Soo; and Whang, Kong-Hyun, 5,703,139, Cl. 522-42.000.

Kim, Sang-Keun; Lee, Haeng-Woo; Choi, Cheol-Kyu; Kim, Jeong-Deuk; Hong, Jin-Who; Kim, Chang-Soo; and Whang, Kong-Hyun, 5,703,142, Cl. 522-90.000.
Hanyu, Yoshiaki; and Shimomae, Mutsuo, to Ricoh Company, Ltd. Page printer resolution converting method, and variable-length reversible compression process. 5,704,020, Cl. 395-102.000.
Hara, Masanori, to NEC Corporation. Picture processing method for correcting distorted pictures and apparatus for executing this method. 5,703,958, Cl. 382-124.000.
Hara, Seinosuke, to Unisia Jecs Corporation. Cylinder valve operating system. 5,701,857, Cl. 123-90.160.
Harada, Hisanobu: *See—*
Ohno, Hayato; Nakao, Taku; Harada, Hisanobu; Hidesaka, Shinichi; Kohara, Hidekatsu; and Nakayama, Toshimasa, 5,702,862, Cl. 430-191.000.
Harada, Kazuya: *See—*
Shimizu, Osamu; Harada, Kazuya; Wada, Shinichi; Fujimoto, Tetsuya; and Inui, Takanari, 5,702,190, Cl. 400-341.000.
Harada, Minoru: *See—*
Kaji, Naruhiko; Nakano, Yutaka; Nakata, Remmei; Harada, Minoru; Shinjo, Ryoichi; and Tsujimura, Manabu, 5,702,673, Cl. 422-186.070.
Harada, Takamasa: *See—*
Escher, Claus; Harada, Takamasa; Illian, Gerhard; Rösch, Norbert; and Wingen, Rainer, 5,702,639, Cl. 252-299.000.
Harada, Takayuki: *See—*
Izumi, Jun; Yasutake, Akinori; Tsutaya, Hiroyuki; Harada, Takayuki; and Hamada, Kenichi, 5,702,505, Cl. 95-115.000.
Haraguchi, Hiroshi: *See—*
Senda, Shinya; and Haraguchi, Hiroshi, 5,703,685, Cl. 356-401.000.
Haramoto, Cary; and Wilson, Tom C. Refrigeration system accumulating vessel having a brazed, metal-clad deflector. 5,701,758, Cl. 62-503.000.
Harayama, Masatoshi: *See—*
Fujii, Hideaki; Ishiga, Hiroshi; Harayama, Masatoshi; and Oka, Motohiro, 5,703,433, Cl. 313-484.000.
Harayama, Yoichi: *See—*
Horiuchi, Michio; and Harayama, Yoichi, 5,702,807, Cl. 428-210.000.
Harder, Piet, to Fluke Corporation. Shielded banana plug with double shroud and input receptacle. 5,703,324, Cl. 174-21.00C.
Hards, Graham A.: *See—*
Frost, Jonathan C.; Gascoyne, John M.; Hards, Graham A.; Wilkinson, David P.; and Prater, Keith B., 5,702,839, Cl. 429-42.000.
Hardy, Eugene E.; and Psihoules, Anthony, to Colgate-Palmolive Company. Hair composition. 5,702,692, Cl. 424-70.100.
Hardy, Mary Anne; and Isenberg, O. Marlene, to Halliburton Energy Services, Inc. Methods and compositions for reducing water production from subterranean formations. 5,701,956, Cl. 166-295.000.
Harhen, E. Paul, to Vision-Sciences, Inc. Disposable endoscopic sheath support and positioning assembly. 5,702,348, Cl. 600-124.000.
Harmer, Walter L.: *See—*
Ho, Kwok-Lun; and Harmer, Walter L., 5,702,811, Cl. 428-323.000.
Harms, Jürgen: *See—*
Biedermann, Lutz; and Harms, Jürgen, 5,702,451, Cl. 623-17.000.
Harper, Dennis: *See—*
Pavur, Carol P.; Harper, Dennis; Bonnell, Steven W.; Norkus, James F.; Hartery, William F.; and Galloway, Lawrence W., 5,702,133, Cl. 292-80.000.
Harrington, Donald: *See—*
Harrington, Donald Weber, 5,702,129, Cl. 285-45.000.
Harrington, Donald Weber, to Harrington, Donald. Riser assembly for underground pipe connections. 5,702,129, Cl. 285-45.000.
Harris, Amy: *See—*
Carlson, William C.; Hartle, Jeffrey E.; Salatas, Kathy; Harris, Amy; and Littke, Willis R., 5,701,699, Cl. 47-57.600.
Harris Corporation: *See—*
Davis, Alan Merle; and Blickhan, Joseph David, 5,703,536, Cl. 330-289.000.
Schillaci, Onofrio; and Horton, Michael D., 5,703,929, Cl. 379-21.000.
Harris, Gerald R.: *See—*
Wright-Ott, Christine; Wadsworth, John F.; and Harris, Gerald R., 5,701,968, Cl. 180-65.100.
Harris, Heidelberg: *See—*
Novick, Michael Alexander; and Belanger, Roger Robert, 5,702,100, Cl. 271-302.000.
Harris, Kevin: *See—*
Rajagopalan, Murali; and Harris, Kevin, 5,703,160, Cl. 525-196.000.
Harris, Norman H.: *See—*
Chen, William W.; and Harris, Norman H., 5,702,654, Cl. 264-82.000.
Harris, Walter D.: *See—*
Wood, Christopher; Cairns, James G., Jr.; and Harris, Walter D., 5,702,488, Cl. 623-27.000.
Harrison, Guy N. P.; and Van Hest, Wilhelmus J. J., to U.S. Philips Corporation. Packed electric lamp. 5,702,002, Cl. 206-418.000.
Harrison, Michael A.: *See—*
Farris, Mark S.; Harrison, Michael A.; Loftus, John M.; Taylor, Aaron K.; Mack, Christoph E.; and Collins, Ross P., 5,702,092, Cl. 267-64.150.
Harrold, Jonathan: *See—*
Ezra, David; Woodgate, Graham John; Harrold, Jonathan; and Omar, Basil Arthur, 5,703,717, Cl. 359-462.000.
Hartery, William F.: *See—*
Pavur, Carol P.; Harper, Dennis; Bonnell, Steven W.; Norkus, James F.; Hartery, William F.; and Galloway, Lawrence W., 5,702,133, Cl. 292-80.000.
Hartle, Jeffrey E.: *See—*
Carlson, William C.; Hartle, Jeffrey E.; Salatas, Kathy; Harris, Amy; and Littke, Willis R., 5,701,699, Cl. 47-57.600.
Hartman, Daniel A.; Bright, Timothy L.; and Shroder, Terry A., to Electra Form, Inc. Take-out and cooling apparatus. 5,702,734, Cl. 425-534.000.
Hartmann, Paul R.: *See—*
Pope, Kevin; and Hartmann, Paul R., 5,703,871, Cl. 370-248.000.
Hartweg, Martin: *See—*
von Schnering, Hans-Georg; Becker, Winfried; Schwarz, Martin; Hettich, Bernhard; Hartweg, Martin; Walz, Leonhard; and Popp, Thomas, 5,703,021, Cl. 505-501.000.
Hartz Mountain Corporation, The: *See—*
Suchowski, Bernard; and Carroll, George, 5,701,849, Cl. 119-865.000.
Harvey, John: *See—*
Evans, Steven L.; Harvey, John; and Tsujino, Yasuko, 5,703,019, Cl. 504-320.000.
Harvey, Robert Joseph: *See—*
Buck, Keith Evan; Farrar, David John; Harvey, Robert Joseph; Litwak, Philip; and Rueff, John Robert, 5,701,919, Cl. 128-898.000.
Harvey, Thomas E. Boat dock bumper. 5,701,837, Cl. 114-219.000.
Hasbro, Inc.: *See—*
Beckman, Ralph A.; Schwartz, Stephen A.; Radosevich, Roseann; and Trammell, Michele P., 5,702,282, Cl. 446-267.000.
Moore, Michael A.; Griffin, David R.; and Dubose, Jeffery, 5,701,878, Cl. 124-67.000.
Haseba, Yasuhiro; Miyazawa, Kazutoshi; Matsui, Shuichi; Kondo, Tomoyuki; Goto, Yasuyuki; Nakagawa, Etsuo; and Sawada, Shinichi, to Chisso Corporation. Liquid crystalline compound containing fluorine atom substituted alkyl group(s) and a liquid crystal composition. 5,702,641, Cl. 252-299.630.
Hasebe, Kiyoshi: *See—*
Takahashi, Makoto; and Hasebe, Kiyoshi, 5,703,312, Cl. 84-626.000.
Hasegawa, Makoto: *See—*
Takahashi, Kazuaki; Hasegawa, Makoto; Makimoto, Mitsuo; and Fujimura, Munenori, 5,703,546, Cl. 333-204.000.
Hasegawa, Takashi: *See—*
Iwakiri, Hiroshi; Fujita, Masayuki; and Hasegawa, Takashi, 5,703,146, Cl. 523-200.000.
Hashimoto, Hiroshi: *See—*
Murayama, Yuichiro; Satake, Masaki; Hashimoto, Hiroshi; and Okita, Tsutomu, 5,702,821, Cl. 428-425.900.
Hashimoto, Kazuhiko; Yoshiike, Nobuyuki; and Morinaka, Katsuya, to Matsushita Electric Industrial Co., Ltd. Human occupancy detection method and system for implementing the same. 5,703,367, Cl. 250-342.000.
Hashimoto, Susumu: *See—*
Iwasaki, Hitoshi; Ohsawa, Yuichi; Kondoh, Reiko; Hashimoto, Susumu; Sawabe, Atsuhito; Kamiguchi, Yuzo; and Sahashi, Masashi, 5,702,832, Cl. 428-611.000.
Hashiuchi, Fumio; Hirai, Yushirou; and Iwasaki, Eiji, to Nippon Mining & Metals Co., Ltd. Method for coating with finning preventive agent. 5,702,758, Cl. 427-133.000.
Hashizume, Takeshi; and Sakashita, Kazuhiro, to Mitsubishi Denki Kabushiki Kaisha. Master-slave bistable latch with clock input control. 5,703,513, Cl. 327-202.000.
Hasler, Roland; and Miescher, Stefan, to Hilti Aktiengesellschaft. Device for testing the holding force of fastener elements secured in a base material. 5,703,302, Cl. 73-865.800.
Hastings, Howard V., III: *See—*
Hennessey, A. Kathleen; Lin, YouLing; Hastings, Howard V., III; Lovelace, Jerome R.; and Chang, Ning San, 5,703,969, Cl. 382-276.000.
Hastrup, Sven; Branner, Sven; Jørgensen, Birthe Ravn; Christensen, Tove; Jørgensen, Birgitte Bojer; Shuster, Jeffrey R.; Madden, Mark; Moyer, Donna L.; and Fuglsang, Claus, to Novo Nordisk A/S; and Novo Nordisk Biotech, Inc. Processes for producing an enzyme. 5,702,934, Cl. 435-183.000.
Hasvold, Lisa Anne: *See—*
Li, Qun; Wang, Wei-Bo; Chu, Daniel T.; and Hasvold, Lisa Anne, 5,703,244, Cl. 548-557.000.
Hatakeyama, Yoshiharu; and Yuhara, Yukitomo, to Yoshida Kogyo Co., Ltd. Method for making sheet button panel assembly. 5,702,666, Cl. 264-544.000.
Hatanaka, Katsuyuki, to Sanyo Chemical Industries, Ltd. Slime hydrolase producing bacterium and process for producing slime hydrolase. 5,702,605, Cl. 210-632.000.
Hathman, Johnnie L. Disposable wound dressing permitting non-invasive examination. 5,702,356, Cl. 602-41.000.
Hatoh, Kazuhito: *See—*
Yasumoto, Eiichi; Hatoh, Kazuhito; and Gamou, Takaharu, 5,702,838, Cl. 429-40.000.
Hattori, Katsuyoshi, to Kabushiki Kaisha Kanpuri. Apparatus for and process of bookbinding. 5,702,219, Cl. 412-6.000.
Hattori, Yoshifumi: *See—*
Arashima, Teruo; Kimura, Makiko; Kashino, Toshio; Sugitani, Hiroshi; Hattori, Yoshifumi; Ikeda, Masami; Saito, Asao; Masuda, Kazuaki; Saito, Akio; and Orikasa, Tsuyoshi, 5,703,632, Cl. 347-47.000.

Hau, Gerhard; Wistuba, Lothar; and Hollmann, Josef, to Siemens Aktiengesellschaft. Closing device for initiating cooling for a core melt. 5,703,917, Cl. 376-280.000.
Haupt, Heinrich: *See—*
Gittinger, Andreas; Wulff, Claus; Haupt, Heinrich; and Idel, Karsten-Josef, 5,703,204, Cl. 528-486.000.
Haupt, Werner: *See—*
Paramonov, Vladimir A.; Tychinin, Anatolij I.; Moroz, Anatolij I.; Birger, Boris L.; Frommann, Klaus; Haupt, Werner; and Ottersbach, Walter, 5,702,528, Cl. 118-623.000.
Hauser, Kurt, to Behr GmbH & Co. Axial fan for an internal combustion engine. 5,701,854, Cl. 123-41.490.
Hawkes, Stanton G. Doorknob cover. 5,701,635, Cl. 16-114.00R.
Hawkins, David John Drake, to CSR Limited. Manhole cover frames. 5,702,200, Cl. 404-25.000.
Hawryszkow, Michael G., to Westinghouse Air Brake Company. Railway vehicle brake system. 5,701,975, Cl. 188-52.000.
Hay, Jennifer L.: *See—*
Wang, Xintao; and Hay, Jennifer L., 5,702,431, Cl. 607-61.000.
Hayafune, Hiroshi; and Kumakura, Atsushi, to Tsubakimoto Chain Co. Chain tensioning device. 5,702,318, Cl. 474-111.000.
Hayakashi, Bunji: *See—*
Imamura, Toshihide; Kadotani, Kanichi; Hayakashi, Bunji; Imaizumi, Hisaakira; Shakushi, Tetsuo; Matsumoto, Toshihiko; and Watanabe, Genichiro, 5,701,950, Cl. 165-222.000.
Hayakawa, Eiji: *See—*
Nakakura, Masashi; Ueno, Yuji; Hayakawa, Eiji; and Kuroda, Tokuyuki, 5,703,080, Cl. 514-253.000.
Hayakawa, Koji; Nakajima, Isao; and Utsumi, Yusuke, to NGK Insulators, Ltd. Lateral type molding apparatus for the production of composite insulators. 5,702,731, Cl. 425-125.000.
Hayakawa, Yasuhiko: *See—*
Hofmann, Gunter A.; Gilbert, Richard A.; Hayakawa, Yasuhiko; Heller, Richard; and Jaroszeski, Mark J., 5,702,359, Cl. 604-20.000.
Hayakawa, Yuuichi; Saitoh, Shinichi; Matsuzaki, Isao; and Kayama, Masayoshi, to NEC Corporation. Composite magnetic head. 5,703,739, Cl. 360-121.000.
Hayase, Shuzi; Nakano, Yoshihiko; and Kani, Rikako, to Kabushiki Kaisha Toshiba. Organic polysilane composition, colored material, method of manufacturing colored material and liquid crystal display. 5,702,776, Cl. 428-1.000.
Hayashi, Hideki; Mizuno, Sadao; Ito, Noboru; Urairi, Kenichiro; and Komma, Yoshiaki, to Matsushita Electric Industrial Co., Ltd. Optical head and optical data recording and reproducing apparatus having the same. 5,703,856, Cl. 369-54.000.
Hayashi, Hideki; and Teraguchi, Yuji, to Clarion co. Disk-changing device with reciprocating back-switching step cam plates. 5,703,866, Cl. 369-192.000.
Hayashi, Hideo: *See—*
Fujimura, Hiroyuki; Suzuki, Takayuki; Yamada, Norio; Ichiki, Yoshiyuki; Maezawa, Akihiko; and Hayashi, Hideo, 5,702,572, Cl. 204-157.150.
Hayashi, Kenji: *See—*
Koyama, Mikio; Hayashi, Kenji; and Kikuchi, Tomoe, 5,702,860, Cl. 430-137.000.
Hayashi, Kimiyoshi: *See—*
Ikeda, Yoshinori; Ichikawa, Hiroyuki; Kurita, Mitsuru; Hayashi, Kimiyoshi; Honma, Toshio; and Horie, Yoshiko, 5,703,694, Cl. 358-296.000.
Hayashi, Kuniharu: *See—*
Mizutani, Minoru; Hayashi, Kuniharu; and Aida, Koji, 5,702,189, Cl. 400-328.000.
Hayashi, Kunihiro: *See—*
Ohtomo, Fumio; Hayashi, Kunihiro; Kodaira, Jun-ichi; Nishizawa, Hiroyuki; and Yoshino, Kenichiro, 5,703,718, Cl. 359-494.000.
Hayes, Donald J.; and Cox, W. Royall, to Compaq Computer Corporation. Method of forming an orifice array for a high density ink jet printhead. 5,703,631, Cl. 347-47.000.
Hayes, Earl J.; Hutchinson, Timothy A.; Hein, David A.; Shen, Alexander; and Pike-Biegunski, Michael J., to Alcoa Fujikura Limited. Electronic vehicular junction box having reduced size and weight. 5,703,757, Cl. 361-752.000.
Hayes, Raymond Eugene: *See—*
Kuran, Christopher G.; Valley, Harold John; and Hayes, Raymond Eugene, 5,701,934, Cl. 137-625.460.
Hayes, Robert S., to HE Holdings, Inc. Infrared to visible light image conversion device. 5,703,363, Cl. 250-332.000.
Hayhurst, Peter: *See—*
Kennedy, Brian Steven; and Hayhurst, Peter, 5,701,730, Cl. 57-224.000.
Hayman, G. Thomas: *See—*
Leathers, Timothy D.; Hayman, G. Thomas; and Cote, Gregory L., 5,702,942, Cl. 435-252.900.
Hays III, William Witherspoon, to Ericsson Inc. RF printed circuit module and method of making same. 5,703,544, Cl. 333-185.000.
Hayworth, Gregory Farin: *See—*
Eckels, Phillip William; Sato, Kazuhiko; Woods, Daniel Christian; Ward, Granville Geer; Hayworth, Gregory Farin; and King, Christopher G., 5,701,744, Cl. 62-47.100.
Hazzard, Michael J.: *See—*
Wu, Gary C.; Pawar, Chandra S.; Leibowitz, Steven H.; Pullin, Edward J.; Hazzard, Michael J.; and Duggan, Joseph C., 5,704,052, Cl. 395-380.000.
HBM, Inc.: *See—*
Hansson, Thomas W.; and Hopkins, Randall K., 5,703,334, Cl. 177-201.000.
HE Holdings, Inc.: *See—*
Hayes, Robert S., 5,703,363, Cl. 250-332.000.
Headway Technologies, Inc.: *See—*
Guo, Yimin; Ju, Kochan; and Hsu, Yimin, 5,703,485, Cl. 324-235.000.
Heartport, Inc.: *See—*
Stevens, John H.; Sterman, Wesley D.; Gifford, Hanson S., III; and Machold, Timothy R., 5,702,368, Cl. 604-171.000.
Heath, John S.: *See—*
Berberich, James William; Berg, Lowell James; Boutaghou, Zine-Eddine; Heath, John S.; and Neubauer, Jerry Lee, 5,703,734, Cl. 360-97.020.
Heath, Richard W., to Tolco, Incorporated. Threaded bracket for hanger rod. 5,702,077, Cl. 248-59.000.
Hebert, Caroline Alice: *See—*
Doerschuk, Claire M.; Fong, Sherman; Hebert, Caroline Alice; Kim, Kyung Jin; and Leong, Steven R., 5,702,946, Cl. 435-320.100.
Heckerman, David E.; Breese, John S.; Horvitz, Eric; and Chickering, David Maxwell, to Microsoft Corporation. Collaborative filtering utilizing a belief network. 5,704,017, Cl. 395-61.000.
Heckerman, David E.; Geiger, Dan; and Chickering, David M., to Microsoft Corporation. Generating improved belief networks. 5,704,018, Cl. 395-75.000.
Hedberg, Erik Leigh: *See—*
Bertin, Claude Louis; Howell, Wayne John; Hedberg, Erik Leigh; Kalter, Howard Leo; and Kelley, Gordon Arthur, Jr., 5,702,984, Cl. 437-208.000.
Douse, David Elson; Ellis, Wayne Frederick; and Hedberg, Erik Leigh, 5,703,823, Cl. 365-222.000.
Heddle, Robert M.; Yerrace, Frank Dominic; and Dahl, Geoff, to Microsoft Corporation. Method and system for mixing audio streams in a computing system. 5,703,794, Cl. 364-514.00R.
Hedeen, Nils E. Bicycle carrier. 5,702,040, Cl. 224-511.000.
Heegard, Chris; King, Andrew J.; Lovely, Sydney; and Kolze, Thomas J., to General Instrument Corporation of Delaware. Synchronization and error detection in a packetized data stream. 5,703,887, Cl. 371-42.000.
Hegemier, Timothy Alan; and Binford, John Dudley, to Dana Corporation. Cylinder with hybrid bore surface. 5,701,861, Cl. 123-193.200.
Hegyi, Dennis J. Multi function light sensor for vehicle. 5,703,568, Cl. 340-602.000.
Heidelberg Harris SA: *See—*
Métrope, Jacques, 5,701,822, Cl. 101-477.000.
Heidelberger Druckmaschinen AG: *See—*
Métrope, Jacques, 5,701,822, Cl. 101-477.000.
Novick, Michael Alexander; and Belanger, Roger Robert, 5,702,100, Cl. 271-302.000.
Stephan, Günter, 5,701,819, Cl. 101-409.000.
Heidelberger Druckmaschinen Aktiengesellschaft: *See—*
Thünker, Norbert; and Junghans, Rudi, 5,701,817, Cl. 101-350.000.
Heidlas, Jürgen; and Cully, Jan, to SKW Trostberg Aktiengesellschaft. Process for the purification of carbohydrate derivatives with surface-active properties. 5,703,228, Cl. 536-127.000.
Heikal, Morgan, to P. A. Hilton Limited. Heat flow transducer. 5,702,185, Cl. 374-29.000.
Heil, Holger: *See—*
Gantioler, Josef-Matthias; Heil, Holger; and Tihanyi, Jenoe, 5,703,521, Cl. 327-512.000.
Heiman, Jerome R.: *See—*
Thomas, Brian J.; Slayton, Gerald D.; Heiman, Jerome R.; and Barnett, Rick, 5,702,841, Cl. 429-88.000.
Hein, David A.: *See—*
Hayes, Earl J.; Hutchinson, Timothy A.; Hein, David A.; Shen, Alexander; and Pike-Biegunski, Michael J., 5,703,757, Cl. 361-752.000.
Hein, Herbert: *See—*
Emmerich, Kurt; and Hein, Herbert, 5,703,559, Cl. 336-234.000.
Hein, Richard D.: *See—*
McLelland, Douglas M.; Wolfe, Paul T.; and Hein, Richard D., 5,702,094, Cl. 267-140.120.
Heinrich, Rudolf; Maier, Thomas; Kocur, Jean; and Schlicht, Rainer, to Hoechst Aktiengesellschaft. Formulations of crop protection agents. 5,703,010, Cl. 504-116.000.
Heintke, Hans-Eberhard; and Fleaser, Achim, to Braun Aktiengesellschaft. Epilating appliance. 5,702,403, Cl. 606-133.000.
Heinzmann, Richard Kurt: *See—*
Kamen, Dean L.; Ambrogi, Robert R.; Duggan, Robert J.; Heinzmann, Richard Kurt; Key, Brian R.; Skoskiewicz, Andrzej; and Kristal, Phyllis K., 5,701,965, Cl. 180-7.100.
Heiss, Reinhold, to Aktiengesellschaft, Siemens. Shielding for flat modules. 5,703,761, Cl. 361-800.000.
Hektner, Thomas R.: *See—*
Eutenever, Charles L.; Mattison, Richard C.; Adams, Daniel O.; Hektner, Thomas R.; and Keith, Peter T., 5,702,364, Cl. 604-96.000.
Helena Laboratories Corporation: *See—*
Guadagno, Philip A., 5,702,913, Cl. 435-28.000.

Hell, Erich; Kuhn, Helmut; and Hoernig, Mathias, to Siemens Aktiengesellschaft. X-ray tube with a low-temperature emitter. 5,703,924, Cl. 378-138.000.
Heller, Richard: *See*—
Hofmann, Gunter A.; Gilbert, Richard A.; Hayakawa, Yasuhiko; Heller, Richard; and Jaroszeski, Mark J., 5,702,359, Cl. 604-20.000.
Helmetsie, Eugene, to Hi-Speed Checkweigher Co., Inc. Clamping mechanism. 5,701,991, Cl. 198-836.100.
Helmsderfer, John A. Cover assembly having rapid installation features for covering undersink piping. 5,701,929, Cl. 137-375.000.
Hemker, Hendrick Coenraad; Wagenvoord, Robert Johan; and Kolde, Hans-Jurgen, to Dade International Inc. Method to determine the concentration of anticoagulants. 5,702,912, Cl. 435-13.000.
Henderson, Danny L.; and Powers, Dale R., to Corning Incorporated. Method for purifying polyalkylsiloxanes and the resulting products. 5,703,191, Cl. 528-31.000.
Hendriks, Marc: *See*—
Cahalan, Patrick T.; Verhoeven, Michel; Hendriks, Marc; and Cahalan, Linda, 5,702,818, Cl. 428-409.000.
Henein, Nabil, to ITT Automotive Europe GmbH. Assembly for manufacturing a piston from plastic material. 5,702,736, Cl. 425-556.000.
Henkel Corporation: *See*—
Hunsicker, Jeffrey C.; Verhoeven, John F.; and McCunn, F. Scott, 5,703,251, Cl. 549-410.000.
Hunt, Tracy K.; and Schwarzer, Joerg, 5,703,252, Cl. 549-413.000.
White, Robert Ashton; and Steinbrecher, Lester, 5,702,759, Cl. 427-142.000.
Henkin, Raphael: *See*—
Cherry, Isaac R.; Bachman, John A.; Tanaka, David T.; So, Hangyick; and Henkin, Raphael, 5,701,894, Cl. 128-630.000.
Hennessey, A. Kathleen; Lin, YouLing; Hastings, Howard V., III; Lovelace, Jerome R.; and Chang, Ning San, to Texas Instruments Incorporated; Electroglas, Inc.; and Texas Tech University. System and method for recognizing visual indicia. 5,703,969, Cl. 382-276.000.
Henry, Patrick; Lapresle, Philippe; and Missenard, Gilles, to Stryker Corporation. Assembly piece for an osteosynthesis device. 5,702,394, Cl. 606-61.000.
Hentschel, Klaus: *See*—
Künemund, Thomas; and Hentschel, Klaus, 5,704,010, Cl. 395-3.000.
Henze, Andree; and Calundann, Gordon, to Hoechst Aktiengesellschaft. Process for the preparation of nitrogen-containing polymers. 5,703,199, Cl. 528-329.100.
Heraeus Instruments GmbH: *See*—
Nagels, Hans-Otto; Schröder, Dieter; and Kopowski, Eckart, 5,702,945, Cl. 435-297.100.
Herard, James Daniel: *See*—
Brodsky, William Louis; Herard, James Daniel; Macek, Thomas George; Sharp, Timothy Lee; and Shovlowsky, George Joseph, 5,703,331, Cl. 174-254.000.
Heraud, Alain: *See*—
de Saint-Romain, Pierre; and Heraud, Alain, 5,702,511, Cl. 106-31.320.
Herbert, Manfred: *See*—
Wohlrab, Juergen; and Herbert, Manfred, 5,703,920, Cl. 378-4.000.
Herberts GmbH: *See*—
Kerlin, Klaus Gunter; and Hamacher, Peter, 5,702,581, Cl. 204-486.000.
Herbst, Richard Linsley: *See*—
Leong, Tony P.; North, Edward S.; and Herbst, Richard Linsley, 5,703,713, Cl. 359-352.000.
Herchen, Harald: *See*—
Shan, Hongching; Herchen, Harald; and Welch, Michael, 5,702,530, Cl. 118-723.0MP.
Herchenbach, Paul: *See*—
Adamek, Wolfgang; Kretschmer, Horst; Entrup, Hubert Grosse; Nienhaus, Clemens; Herchenbach, Paul; Sarfert, Andreas; Kämpf, Klaus; and Schott, Wilhelm, 5,702,306, Cl. 464-172.000.
Hercules Incorporated: *See*—
Suchanec, Richard Robert, 5,702,521, Cl. 106-713.000.
Thompson, Samuel Anthony, 5,702,682, Cl. 424-9.420.
Hermann, George D., to General Surgical Innovations, Inc. Balloon loaded dissecting instruments. 5,702,417, Cl. 606-194.000.
Hermann, Wolfgang; and Louvel, Jean-Paul, to Deutsche Thomson Brandt GmbH. Switched-mode power supply having standby operation. 5,703,764, Cl. 363-21.000.
Herold, Heiko; Wollenschläger, Axel; and von Schuckmann, Alfred, to Bayer Aktiengesellschaft. Nasal applicator. 5,702,362, Cl. 604-58.000.
Herpst, Robert; and Diaz, Ruben A., to Herpst, Robert. Hydraulic press assembly. 5,701,814, Cl. 100-269.150.
Herr, Hugh M.; and Gamow, Rustem Igor. Shoe and foot prosthesis with bending beam spring structures. 5,701,686, Cl. 36-27.000.
Herre, Jurgen; Seitzer, Dieter; Brandenburg, Karl-Heinz; and Eberlein, Ernst, to Fraunhofer-Gesellschaft zur Foerderung der angewandten Forschung e.V. Process for reducing data in the transmission and/or storage of digital signals from several interdependent channels. 5,703,999, Cl. 395-2.120.
Herring, Christopher M.: *See*—
Derrick, John E.; and Herring, Christopher M., 5,704,058, Cl. 395-495.000.
Herring, Richard L., to Sensormatic Electronics Corporation. Transformer coupled switching transmitter for electronic article surveillance system. 5,703,565, Cl. 340-572.000.
Herrmann, Fritz: *See*—
Horstmann, Michael; and Herrmann, Fritz, 5,702,721, Cl. 424-449.000.
Herrmann, Gebhard: *See*—
Back, Lothar; Herrmann, Gebhard; Nesper, Markus; and Weisshaupt, Dieter, 5,702,411, Cl. 606-157.000.
Herrmann, Wolfgang A.; Fischer, Jakob; Elison, Martina; and Köcher, Christian, to Hoechst Aktiengesellschaft. Process for preparing aromatic olefins. 5,703,269, Cl. 560-19.000.
Herron, Donn Michael: *See*—
Agrawal, Rakesh; Fidkowski, Zbigniew Tadeusz; and Herron, Donn Michael, 5,701,764, Cl. 62-646.000.
Herzig, Christian: *See*—
Dauth, Jochen; Herzig, Christian; Deubzer, Bernward; Schnitzer, Klaus; and Huettner, David, 5,703,190, Cl. 528-12.000.
Hester, John; and Schwartz, Krista S., to NCR Corporation. Accelerated replication of multiple computer displays. 5,704,042, Cl. 395-200.340.
Hete, Bernie F.; and Srock, James D., to Respironics, Inc. Oxygen mixing in a blower-based ventilator. 5,701,883, Cl. 128-204.260.
Hettich, Bernhard: *See*—
von Schnering, Hans-Georg; Becker, Winfried; Schwarz, Martin; Hettich, Bernhard; Hartweg, Martin; Walz, Leonhard; and Popp, Thomas, 5,703,021, Cl. 505-501.000.
Heuer, Lutz; Wachtler, Peter; Kugler, Martin; Schrage, Heinrich; and Sasse, Klaus, to Bayer Aktiengesellschaft. Thiazolylpyrazolinones and their use for protecting technical materials. 5,703,103, Cl. 514-365.000.
Heverly, Marilou. Portable refrigerater food container. 5,701,757, Cl. 62-457.200.
Hewlett-Packard Company: *See*—
Berry, Kyle R., 5,704,025, Cl. 395-131.000.
Blalock, Travis N.; Baumgartner, Richard A.; Hornak, Thomas; and Beard, David, 5,703,353, Cl. 250-214.00C.
Fischer, Steven M.; Nordman, Robert G.; and Werlich, Mark H., 5,703,360, Cl. 250-288.000.
Hofer, Gregory V., 5,703,848, Cl. 369-44.290.
Klammer, Peter J., 5,701,907, Cl. 128-696.000.
Lum, Paul; Chang, Carl; and Zawadzki, Jerry, 5,701,901, Cl. 128-662.060.
Santhanam, Vatsa, 5,704,053, Cl. 284-383.000.
Smith, Thomas G.; Winter, Kirt Alan; and Kurucz, Frank Anthony, 5,704,021, Cl. 395-109.000.
Hewlett, William E.: *See*—
Evans, Nigel; Hewlett, William E.; and Parker, Richard, 5,702,082, Cl. 248-230.100.
Heywang-Koebrunner, Sylvia, to Siemens Aktiengesellschaft. Stereotactic auxiliary attachment for a tomography apparatus for tomogram guided implementation of a biopsy. 5,702,405, Cl. 606-130.000.
Hi-Speed Checkweigher Co., Inc.: *See*—
Helmetsie, Eugene, 5,701,991, Cl. 198-836.100.
Hida, Yoshikazu: *See*—
Kawashima, Kazuki; Katogi, Sadaji; and Hida, Yoshikazu, 5,702,317, Cl. 474-110.000.
Hidesaka, Shinichi: *See*—
Ohno, Hayato; Nakao, Taku; Harada, Hisanobu; Hidesaka, Shinichi; Kohara, Hidekatsu; and Nakayama, Toshimasa, 5,702,862, Cl. 430-191.000.
Hieda, Katsuhiko: *See*—
Mitsui, Tadashi; and Hieda, Katsuhiko, 5,702,567, Cl. 156-644.100.
Higuchi, Hirofumi: *See*—
Abe, Mariko; Ebata, Shuji; Abe, Takafumi; and Higuchi, Hirofumi, 5,703,272, Cl. 560-231.000.
Higuchi, Hiroshi; and Yamagishi, Hisashi, to Bridgestone Sports Co., Ltd. Multi-piece solid golf ball. 5,702,311, Cl. 473-373.000.
Higuchi, Takanobu: *See*—
Iida, Tetsuya; Jinno, Satoshi; and Higuchi, Takanobu, 5,702,792, Cl. 428-64.100.
Higuchi, Yoshio, to Funai Electric Co., Ltd. Battery voltage controller for DC motor. 5,703,447, Cl. 318-139.000.
Higuma, Masahiko; Ikeda, Masami; Asai, Naohito; Abe, Tsutomu; Kashino, Toshio; Ohshima, Noriyoshi; Okazaki, Takeshi; Sugimoto, Hitoshi; and Tajima, Hiroki, to Canon Kabushiki Kaisha. Packing case and opening method therefor. 5,701,995, Cl. 206-205.000.
Hiismäki, Pekka; and Auterinen, Iiro, to RADTEK OY. Moderator material for neutrons and use of said material. 5,703,918, Cl. 376-458.000.
Hilfiker, William K.; and Taylor, Thomas P. Grid-locked block panel system. 5,702,208, Cl. 405-258.000.
Hill, Darrell G.: *See*—
Liu, William U.; and Hill, Darrell G., 5,702,958, Cl. 437-31.000.
Hill, Gerald A., to Walbro Corporation. In tank fuel pump filter. 5,702,237, Cl. 417-313.000.
Hill, John P., to Adaptec, Inc. Analog data acquisition system. 5,703,584, Cl. 341-141.000.
Hill Rom Company, Inc.: *See*—
Carruth, W. Layne, 5,702,536, Cl. 134-10.000.
Hillard, Donald H.: *See*—
Johnson, James W.; and Hillard, Donald H., 5,701,824, Cl. 104-112.000.
Hillerich, Thomas Anthony, Jr.: *See*—
Boone, Joseph T.; Hillerich, Thomas Anthony, Jr.; Grispart, Gerald Robert; and Ydoate, Edward, 5,701,989, Cl. 198-448.000.
Hillrichs, Eilhard; Kienberger, Manfred; and Sander, Ulrich, to Metallgesellschaft Aktiengesellschaft. Process of preparing alkali peroxide solutions. 5,702,585, Cl. 205-468.000.
Hilti Aktiengesellschaft: *See*—
Hasler, Roland; and Miescher, Stefan, 5,703,302, Cl. 73-865.800.

Hines, Letha M.: *See*—
Osborn, Thomas W., III; Sugahara, Kazuko; and Hines, Letha M., 5,702,382, Cl. 604-385.200.
Hinkle, Stephen C.; and Hull, Richard, to Microchip Technology Incorporated. Electromagnetic compatibility for integrated circuit pins and inernal nodes. 5,703,416, Cl. 307-89.000.
Hino, Ichiro; and Imazaki, Kazunori, to Sony Corporation. Portable telephone equipment for biasing a switching member to a normally neutral position. 5,703,947, Cl. 379-419.000.
Hino, Masayuki: *See*—
Matsunaga, Satoru; Hino, Masayuki; and Teramoto, Yosikiti, 5,702,824, Cl. 428-500.000.
Hinterseher, Josef. Process for producing dental prostheses. 5,702,650, Cl. 264-16.000.
Hinze, Lee R., to Delco Electronics Corporation. Fastenerless sealed electronic module. 5,703,754, Cl. 361-736.000.
Hirai, Masana: *See*—
Imaeda, Takao; and Hirai, Masana, 5,702,883, Cl. 435-4.000.
Hirai, Yoshikatsu: *See*—
Nakai, Satoru; Kaneta, Mayumi; Kikumoto, Yoshikazu; Hong, Yeong-Man; Kawai, Kazuyoshi; Takegata, Setsuko; Ishii, Kiyoshi; Yanagihara, Yasuo; and Hirai, Yoshikatsu, 5,702,698, Cl. 424-85.200.
Hirai, Yushirou: *See*—
Hashiuchi, Fumio; Hirai, Yushirou; and Iwasaki, Eiji, 5,702,758, Cl. 427-133.000.
Hiraiwa, Hiroyuki; Nakagawa, Kazuhiro; Jinbo, Hiroki; Takano, Jun; and Fujiwara, Seishi, to Nikon Corporation. Silica glass member for UV-lithography, method for silica glass production, and method for silica glass member production. 5,702,495, Cl. 65-17.100.
Hiraiwa, Hiroyuki: *See*—
Komine, Norio; Jinbo, Hiroki; Fujiwara, Seishi; and Hiraiwa, Hiroyuki, 5,703,712, Cl. 359-350.000.
Hirano, Hirofumi: *See*—
Kakizaki, Masaaki; Hirano, Hirofumi; and Bekki, Toshihiko, 5,702,191, Cl. 400-582.000.
Hirano, Isuke: *See*—
Nakamura, Takuya; Hirano, Isuke; Aoshima, Shinichiro; Takahashi, Hironori; and Urakami, Tsuneyuki, 5,703,491, Cl. 324-750.000.
Hirano, Yoshihiro: *See*—
Sakauchi, Kazuo; Hirano, Yoshihiro; and Uchikawa, Akira, 5,702,522, Cl. 117-2.000.
Hirata, Masakuni: *See*—
Inoue, Kiyoshi; and Hirata, Masakuni, 5,701,862, Cl. 123-196.00S.
Hirata, Masaru, to NEC Corporation. Frequency multiplier circuit. 5,703,509, Cl. 327-119.000.
Hirata, Shoichi: *See*—
Nakajima, Akihisa; Yabusaki, Masami; Hirata, Shoichi; Yamaguchi, Kenichi; Fujiwara, Shiokazu; Maruyama, Yasuo; Uchiyama, Yasuyuki; and Takemoto, Eriko, 5,703,941, Cl. 379-201.000.
Hirata, Toichi: *See*—
Watanabe, Hiroshi; Hirata, Toichi; Haga, Masakazu; Yamagata, Eiji; Fujishima, Kazuo; and Adachi, Hiroyuki, 5,701,691, Cl. 37-348.000.
Hirata, Yoshihiko: *See*—
Sagisaka, Yasuo; and Hirata, Yoshihiko, 5,701,866, Cl. 123-339.150.
Hiratani, Haruyuki; Nakada, Kazuhiko; Yamazaki, Toshio; and Ichinohe, Shoji, to Menicon Co., Ltd. Ocular lens material. 5,703,143, Cl. 523-107.000.
Hirayama, Masaki: *See*—
Ohmi, Tadahiro; and Hirayama, Masaki, 5,703,488, Cl. 324-464.000.
HiRel Connectors Inc.: *See*—
Baumann, Frederick B.B.; and Spears, Louis E., 5,702,263, Cl. 439-321.000.
Hiroki, Tomoyuki, to Canon Kabushiki Kaisha. Optical information recording/reproducing apparatus and method with function of adjusting reproducing power. 5,703,841, Cl. 369-13.000.
Hironaka, Kazuo: *See*—
Umeda, Hironori; Mashimo, Tohru; Hironaka, Kazuo; Nakahama, Tadamitsu; Yamane, Takakazu; Aizawa, Makoto; and Taniguchi, Yukifumi, 5,702,578, Cl. 204-486.000.
Hirota, Hisatoshi; and Ito, Naoyuki, to TGK Company, Ltd. Capacity control device for valiable-capacity compressor. 5,702,235, Cl. 417-222.200.
Hirota, Noriaki: *See*—
Yuasa, Yasuhito; Hirota, Noriaki; Toyoda, Akinori; and Tatematsu, Hideki, 5,702,858, Cl. 430-106.600.
Hirotsune, Akemi: *See*—
Miyauchi, Yasushi; Terao, Motoyasu; Hirotsune, Akemi; Minemura, Hiroyuki; and Miyamoto, Harukazu, 5,703,867, Cl. 369-275.300.
Hirukawa, Shigeru; Shiraishi, Naomasa; and Kameyama, Masaomi, to Nikon Corporation. Projection-exposing apparatus with deflecting grating member. 5,703,675, Cl. 355-53.000.
Hisada, Haruhiko: *See*—
Ohmae, Tadayuki; Hisada, Haruhiko; Hosoda, Kenichi; Yoshiya, Masahide; Komori, Yoshiyuki; Yamaguchi, Noboru; Fujiki, Tohru; and Yasuda, Noriyasu, 5,703,167, Cl. 525-207.000.
Hitachi Cable, Ltd.: *See*—
Imoto, Katsuyuki, 5,703,987, Cl. 385-126.000.
Hitachi Construction Machinery Co., Ltd.: *See*—
Watanabe, Hiroshi; Hirata, Toichi; Haga, Masakazu; Yamagata, Eiji; Fujishima, Kazuo; and Adachi, Hiroyuki, 5,701,691, Cl. 37-348.000.
Hitachi Electronics Engineering Co., Ltd.: *See*—
Kubota, Toshihiro, 5,702,224, Cl. 414-403.000.
Hitachi Koki Co., Ltd.: *See*—
Sagawa, Akemi; Sakai, Masahiko; Ebata, Michio; and Itoh, Ren, 5,703,145, Cl. 523-161.000.
Hitachi Ltd.: *See*—
Akiba, Takesada; and Kitsukawa, Goro, 5,703,825, Cl. 365-229.000.
Amano, Masahiko; Watanabe, Masahiro; Konishi, Hiroo; Tanifuji, Shinya; and Nakamura, Tomoharu, 5,703,791, Cl. 364-492.000.
Kaku, Nobuyuki; Ono, Seiji; Maehara, Yoshimi; and Inoue, Mikihisa, 5,702,062, Cl. 242-338.400.
Katohno, Noboru; Tsurumi, Yoshihisa; and Iwama, Chikara, 5,703,737, Cl. 360-109.000.
Kirino, Fumiyoshi; Toda, Tsuyoshi; Ide, Horishi; Sugiyama, Hisataka; Saito, Atsushi; Tsuchinaga, Hiroyuki; Maeda, Takeshi; Kugiya, Fumio; Kaku, Toshimitsu; Mita, Seiichi; Shigematsu, Kazuo; and Ouchi, Yasuhide, 5,703,855, Cl. 369-54.000.
Kiriyama, Norio; and Yokosuka, Hirobumi, 5,703,645, Cl. 348-388.000.
Miyauchi, Yasushi; Terao, Motoyasu; Hirotsune, Akemi; Minemura, Hiroyuki; and Miyamoto, Harukazu, 5,703,867, Cl. 369-275.300.
Saito, Atsushi; and Sugiyama, Hisataka, 5,703,846, Cl. 369-44.260.
Takahashi, Kazunori; Hamada, Nobuhiro; Takatoo, Masao; Nagai, Tohru; Suzuki, Toshiko; and Furukawa, Souichi, 5,703,778, Cl. 364-437.000.
Takase, Akihiko; and Tanabe, Shirou, 5,703,869, Cl. 370-229.000.
Tsuru, Yasutaka; Okamura, Takumi; Kimura, Shoji; Yamamoto, Yuji; Murata, Toshinori; Katsumata, Kenji; Akiyama, Moriyoshi; and Eda, Takanori, 5,703,658, Cl. 348-554.000.
Hitachi Maxell, Ltd: *See*—
Kaku, Nobuyuki; Ono, Seiji; Maehara, Yoshimi; and Inoue, Mikihisa, 5,702,062, Cl. 242-338.400.
Miyauchi, Yasushi; Terao, Motoyasu; Hirotsune, Akemi; Minemura, Hiroyuki; and Miyamoto, Harukazu, 5,703,867, Cl. 369-275.300.
Hitchen, Christopher: *See*—
Karur, Chandresekar R.; Vanden Berg, Ted A.; Jairazbhoy, Vivek A.; and Hitchen, Christopher, 5,703,290, Cl. 73-430.000.
Hixon, Leonard L., Jr.: *See*—
Rees, John Joseph M.; and Hixon, Leonard L., Jr., 5,701,729, Cl. 57-3.000.
HK Medical Technologies Incorporated: *See*—
Kulisz, Andre A.; and Migachyov, Valery, 5,701,916, Cl. 128-885.000.
HK Systems, Inc.: *See*—
Franklin, Joseph F.; and Reese, Owen N., II, 5,701,722, Cl. 53-399.000.
Hlivka, Linda M.; and Wai, George K., to Ashland Inc. Pitch control composition. 5,702,644, Cl. 252-356.000.
Ho, Kwok-Lun; and Harmer, Walter L. High performance abrasive articles containing abrasive grains and nonabrasive composite grains. 5,702,811, Cl. 428-323.000.
Hoang, Quy N.: *See*—
Boggs, Andrew Keith; Hoang, Quy N.; Jacobs, Joe; Mullen, John Mark; Purrington, Challis; and Weaver, Laura A., 5,703,872, Cl. 370-252.000.
Hode, Jean-Michel: *See*—
Solal, Marc; Ventura, Pascal; and Hode, Jean-Michel, 5,703,427, Cl. 310-313.00D.
Hodges, Steven C.: *See*—
Mazurek, Carol; Nelson, Charles L.; Hodges, Steven C.; and Scheffel, James W., 5,702,953, Cl. 436-69.000.
Hodson, Simon K.: *See*—
Andersen, Per Just; and Hodson, Simon K., 5,702,787, Cl. 428-36.400.
Hoechst Aktiengesellschaft: *See*—
Crass, Gerhard; and Gatter, Erich, 5,703,029, Cl. 510-242.000.
Escher, Claus; Harada, Takamasa; Illian, Gerhard; Röech, Norbert; and Wingen, Rainer, 5,702,639, Cl. 252-299.000.
Heinrich, Rudolf; Maier, Thomas; Kocur, Jean; and Schlicht, Rainer, 5,703,010, Cl. 504-116.000.
Henze, Andree; and Calundann, Gordon, 5,703,199, Cl. 528-329.100.
Herrmann, Wolfgang A.; Fischer, Jakob; Elison, Martina; and Köcher, Christian, 5,703,269, Cl. 560-19.000.
Klingler, Otmar; Zoller, Gerhard; Jablonka, Bernd; Just, Melitta; Breipohl, Gerhard; Knolle, Jochen; König, Wolfgang; and Stilz, Hans Ulrich, 5,703,050, Cl. 514-18.000.
Röech, Wolfgang; Sohn, Erich; Bauer, Klaus; and Bieringer, Hermann, 5,703,008, Cl. 504-106.000.
Wingen, Rainer; and Hornung, Barbara, 5,702,638, Cl. 252-299.620.
von Schnering, Hans-Georg; Becker, Winfried; Schwarz, Martin; Hettich, Bernhard; Hartweg, Martin; Walz, Leonhard; and Popp, Thomas, 5,703,021, Cl. 505-501.000.
Hoechst Celanese Corp: *See*—
Jester, Randy Douglas; Penoyer, John Arthur; Roth, Douglas Duane; Frank, Detlef; Onodera, Minoru; Tsudaka, Takeichi; Sato, Toshiaki; and Moritani, Tohei, 5,703,202, Cl. 528-481.000.
Hoechst Japan Limited: *See*—
Shudo, Koichi; Sugioka, Tatsuo; Inazu, Mizuho; Tanaka, Hideyuki; Inoue, Tsutomu; and Kitamura, Kazuyuki, 5,703,128, Cl. 514-563.000.
Hoechst Schering AgrEvo GmbH: *See*—
Sagenmüller, Alfons; Schubert, Hans-Herbert; Uzawa, Shigeru; and Saito, Kenichi, 5,703,132, Cl. 514-643.000.

Hoekman, Doneil J.; and Kelley, Paul E., to Teledyne Electronic Technologies. Method for generating filtered noise signal and braodband signal having reduced dynamic range for use in mass spectrometry. 5,703,358, Cl. 250-282.000.
Hoenig, Johannes Franz; and Stone, Kevin Thomas. Osteosynthesis plate. 5,702,396, Cl. 606-69.000.
Hoernig, Mathias: *See*—
  Hell, Erich; Kuhn, Helmut; and Hoernig, Mathias, 5,703,924, Cl. 378-136.000.
Hofer, Gregory V., to Hewlett-Packard Company. Off track detection system for ruggedized optical disk drive. 5,703,848, Cl. 369-44.290.
Hoff, Heinz, to Ems-Inventa AG. Partially crystalline block copolyester-polyamides. 5,703,177, Cl. 525-411.000.
Hoffmann, Erwin; Lüdke, Christian; and Skole, Jochen, to Bodenseewerk Perkin-Elmer GmbH. Temperature control method using empirically determined characteristics. 5,703,342, Cl. 219-497.000.
Hoffmann, Jürgen. Process for reinforcing slopes. 5,702,207, Cl. 405-158.000.
Hofmann, Gunter A.; Gilbert, Richard A.; Hayakawa, Yasuhiko; Heller, Richard; and Jaroszeski, Mark J., to Genetronics, Inc. Needle electrodes for mediated delivery of drugs and genes. 5,702,359, Cl. 604-20.000.
Hofmann, Peter: *See*—
  Kuebler, Markus; and Hofmann, Peter, 5,702,785, Cl. 428-35.200.
Hofmann Werkstatt-Technik GmbH: *See*—
  Rossteuscher, Gerhard, 5,703,291, Cl. 73-487.000.
Hogan, Edward J., to MasterCard International Inc. System and method for conducting cashless transactions. 5,704,046, Cl. 395-239.000.
Höganäs AB: *See*—
  Lindberg, Caroline; and Engdahl, Per, 5,703,304, Cl. 75-243.000.
Höger, Thomas: *See*—
  Steiner, Gerd; Munschauer, Rainer; Unger, Liliane; Teschendorf, Hans-Jürgen; and Höger, Thomas, 5,703,091, Cl. 514-300.000.
Hogsett, Gerald R., II: *See*—
  Schanel, Scott; and Hogsett, Gerald R., II, 5,704,028, Cl. 395-140.000.
Holbrook, Peter: *See*—
  Quan, Clifton; Holbrook, Peter; Batterton, Bill; Fitzgerald, Pat; Roper, Dan; and Takaki, Min, 5,703,599, Cl. 342-368.000.
Holland, Robert E.: *See*—
  Brown, Terry S.; and Holland, Robert E., 5,702,599, Cl. 210-248.000.
Hollars, Dennis R.: *See*—
  Cohen, Uri; and Hollars, Dennis R., 5,703,740, Cl. 360-126.000.
Hollmann, Josef: *See*—
  Hau, Gerhard; Wistuba, Lothar; and Hollmann, Josef, 5,703,917, Cl. 376-280.000.
Holmes, Brian M.: *See*—
  Bainbridge, Marlene Adele; and Holmes, Brian M., 5,702,357, Cl. 604-4.000.
Holmes-Farley, Stephen Randall: *See*—
  Mandeville, W. Harry, III; and Holmes-Farley, Stephen Randall, 5,702,696, Cl. 424-78.120.
  Mandeville, W. Harry, III; and Holmes-Farley, Stephen Randall, 5,703,188, Cl. 526-290.000.
Höltke, Hans-Joachim; Seibl, Rudolf; Schmitz, Gudrun; Schöler, Hans Robert; Kessler, Christoph; and Mattes, Ralf, to Boehringer Mannheim GmbH. Process for the detection of nucleic acids. 5,702,888, Cl. 435-6.000.
Holtrop, Joe W.: *See*—
  Carleton, Finis E.; and Holtrop, Joe W., 5,703,299, Cl. 73-863.830.
Holz, Bonita: *See*—
  Moradi, Mohammad A.; Rossman, Michael D.; Lafell, Larry; and Holz, Bonita, 5,703,796, Cl. 364-563.000.
Homma, Taira: *See*—
  Murofushi, Kanji; Homma, Taira; Nagura, Shigehiro; and Armentrout, Richard W., 5,702,927, Cl. 435-104.000.
Honda Giken Kogyo Kabushiki Kaisha: *See*—
  Aoki, Takeshi, 5,701,928, Cl. 137-312.000.
  Honda, Kensuke; Murakami, Hiroshi; and Watanabe, Kazunori, 5,703,466, Cl. 320-23.000.
  Kinoshita, Naoki; and Oozono, Kazuya, 5,703,465, Cl. 320-22.000.
  Kinoshita, Naoki, 5,703,469, Cl. 320-48.000.
  Kumagai, Yorinori; Kodama, Yoshihiro; Kojima, Yoichi; and Terao, Kiminobu, 5,701,976, Cl. 188-71.500.
  Matsuura, Tatsuo; and Inoue, Atsushi, 5,702,144, Cl. 296-37.130.
  Munakata, Hiroki; Nishimura, Yoichi; Kitagawa, Hiroshi; and Akazaki, Shusuke, 5,701,871, Cl. 123-491.000.
  Mutoh, Eiji; Asakura, Suguru; and Nagai, Akira, 5,703,414, Cl. 307-10.500.
  Nakajima, Takeaki; and Yamazaki, Kazumi, 5,702,125, Cl. 280-834.000.
  Nakano, Yasuhiko; and Ishibashi, Yoichi, 5,701,858, Cl. 123-41.100.
  Sunada, Satoru; and Tanizawa, Shoichi, 5,702,322, Cl. 477-120.000.
  Takahashi, Atsuhiko, 5,701,853, Cl. 123-41.330.
  Yamamoto, Yorihisa; Nishi, Yutaka; Nishimori, Takashi; Tokunaga, Hiroyuki; and Machino, Hideki, 5,703,775, Cl. 364-424.051.
Honda, Kensuke; Murakami, Hiroshi; and Watanabe, Kazunori, to Honda Giken Kogyo Kabushiki Kaisha. Charging control apparatus. 5,703,466, Cl. 320-23.000.
Honda, Nobuyasu: *See*—
  Nagai, Takashi; Honda, Nobuyasu; Iida, Tomohide; Akiyama, Toshiaki; Kuramashi, Koji; and Toda, Asao, 5,702,857, Cl. 430-101.000.
Honeywell Inc.: *See*—
  Kennedy, Dennis M., 5,703,490, Cl. 324-650.000.
Hong, Gary, to United Microelectronics Corp. Split gate memory cell with vertical floating gate. 5,703,387, Cl. 257-315.000.
Hong, Jin-Who: *See*—
  Kim, Sang-Keun; Kim, Seoung-Ho; Lee, Haeng-Woo; Choi, Cheol-Kyu; Kim, Jeong-Deuk; Hong, Jin-Who; Kim, Chang-Soo; and Whang, Kong-Hyun, 5,703,139, Cl. 522-42.000.
  Kim, Sang-Keun; Lee, Haeng-Woo; Choi, Cheol-Kyu; Kim, Jeong-Deuk; Hong, Jin-Who; Kim, Chang-Soo; and Whang, Kong-Hyun, 5,703,142, Cl. 522-90.000.
Hong, Sung Kol: *See*—
  Kim, Su Ung; Kim, Dong Yeon; Chung, Gi ju; Hong, Sung Kol; Park, Sung Jun; Nam, Sang Hoon; and Lee, Yong Suk, 5,703,097, Cl. 514-338.000.
Hong, Yeong-Man: *See*—
  Nakai, Satoru; Kaneta, Mayumi; Kikumoto, Yoshikazu; Hong, Yeong-Man; Kawai, Kazuyoshi; Takegata, Setsuko; Ishii, Kiyoshi; Yanagihara, Yasuo; and Hirai, Yoshikatsu, 5,702,698, Cl. 424-85.200.
Honma, Toshio: *See*—
  Ikeda, Yoshinori; Ichikawa, Hiroyuki; Kurita, Mitsuru; Hayashi, Kimiyoshi; Honma, Toshio; and Horie, Yoshiko, 5,703,694, Cl. 358-296.000.
Hooper, Michael Lynn: *See*—
  Dunn, William Frank; Maloney, John Michael; Hooper, Michael Lynn; and Maas, Wayne David, 5,703,680, Cl. 356-35.500.
Hoots, John E.: *See*—
  McCoy, William F.; and Hoots, John E., 5,702,684, Cl. 424-10.300.
Hopf, Christoph, to Sofamor S.N.C. Spine osteosynthesis instrumentation for an anterior approach. 5,702,395, Cl. 606-61.000.
Hopkins, Randall K.: *See*—
  Hansson, Thomas W.; and Hopkins, Randall K., 5,703,334, Cl. 177-201.000.
Hopkins, Russell Bolin: *See*—
  Little, Lewis Henry; Hopkins, Russell Bolin; and Matly, John Michael, 5,703,296, Cl. 73-756.000.
Hopp, Rudolf: *See*—
  Pelzer, Ralf; Surburg, Horst; and Hopp, Rudolf, 5,703,123, Cl. 514-512.000.
Hori, Masahiko, to Kabushiki Kaisha Toshiba. Resin-sealed type semiconductor device. 5,703,407, Cl. 257-783.000.
Hori, Roy Y.: *See*—
  Thongpreda, Nisra; Hori, Roy Y.; and Kyle, Richard F., 5,702,482, Cl. 623-23.000.
Horie, Yoshiko: *See*—
  Ikeda, Yoshinori; Ichikawa, Hiroyuki; Kurita, Mitsuru; Hayashi, Kimiyoshi; Honma, Toshio; and Horie, Yoshiko, 5,703,694, Cl. 358-296.000.
Horigome, Toshihiro; and Kobayashi, Seiji, to Sony Corporation. Recording medium as well as recording apparatus and reproduction apparatus for the same. 5,703,853, Cl. 369-48.000.
Horiguchi, Hiroyuki; and Nakayama, Yoshinobu, to Ricoh Company, Ltd.; Ricoh Elemex Corporation; and Ricoh Seiki Company, Ltd. Thermally-sensitive type flow meter having a high accuracy. 5,703,288, Cl. 73-204.260.
Horikoshi, Hiroyoshi: *See*—
  Yanagisawa, Hiroaki; Fujita, Takashi; Fujimoto, Koichi; Yoshioka, Takao; Wada, Kunio; Oguchi, Minoru; Fujiwara, Toshihiko; and Horikoshi, Hiroyoshi, 5,703,096, Cl. 514-326.000.
Horiuchi, Hiroshi; Momose, Yuichi; and Ushikoshi, Takeshi, to Ishikawajima-shibaura Machinery Co., Ltd. Decompressor for an internal combustion engine. 5,701,860, Cl. 123-182.100.
Horiuchi, Kuniyasu; Endo, Seiichiro; Moriyama, Keiji; and Yokota, Masatoshi, to Sumitomo Rubber Industries, Ltd. Solid golf ball. 5,702,312, Cl. 473-377.000.
Horiuchi, Michio; and Harayama, Yoichi, to Shiko Electric Industries Co., Ltd. Ceramic circuit board and manufacturing method thereof. 5,702,807, Cl. 428-210.000.
Horiuchi, Tamaki: *See*—
  Satou, Masaharu; Kasahara, Tamiyoshi; Murakami, Takuya; Kawagoe, Kenji; Uno, Takaaki; Aimoto, Hideo; and Horiuchi, Tamaki, 5,702,122, Cl. 280-691.000.
Horiuchi, Yoshiro, to Sony Corporation. Color selecting electrode mounting frame for CRT and process for production of same. 5,702,280, Cl. 445-23.000.
Horn, Thomas: *See*—
  Urdea, Michael S.; and Horn, Thomas, 5,702,893, Cl. 435-6.000.
  Urdea, Michael S.; and Horn, Thomas, 5,703,218, Cl. 536-23.100.
Hornak, Thomas: *See*—
  Blalock, Travis N.; Baumgartner, Richard A.; Hornak, Thomas; and Beard, David, 5,703,353, Cl. 250-214.00C.
Hornung, Barbara: *See*—
  Wingen, Rainer; and Hornung, Barbara, 5,702,638, Cl. 252-299.620.
Horsky, Thomas N.; Reynolds, William E.; and Cloutier, Richard M., to Eaton Corporation. Endcap for indirectly heated cathode of ion source. 5,703,372, Cl. 250-423.00R.
Horsley, Scott W.; and Platz, Winfried, to Stormtreat Systems, Inc. Stormwater treatment system/apparatus. 5,702,593, Cl. 210-122.000.
Horstmann, Michael; and Herrmann, Fritz, to LTS Lohmann Therapie-Systeme GmbH & Co. KG. Transdermal therapeutic system exhibiting an increased active substance flow and process for the production thereof. 5,702,721, Cl. 424-449.000.
Horton, Michael D.: *See*—

  Schillaci, Onofrio; and Horton, Michael D., 5,703,929, Cl. 379-21.000.
Horvitz, Eric: *See*—
  Heckerman, David E.; Breese, John S.; Horvitz, Eric; and Chickering, David Maxwell, 5,704,017, Cl. 395-61.000.
Hosoda, Kenichi: *See*—
  Ohmae, Tadayuki; Hisada, Haruhiko; Hosoda, Kenichi; Yoshiya, Masahide; Komori, Yoshiyuki; Yamaguchi, Noboru; Fujiki, Tohru; and Yasuda, Noriyasu, 5,703,167, Cl. 525-207.000.
Hosoi, Masahiro; Saito, Yasuhiko; Saeki, Yasuhiro; and Etchu, Masami, to Teijin Limited. Laminated polyester film for magnetic recording medium. 5,702,794, Cl. 428-65.300.
Hospal Industrie: *See*—
  Chevallet, Jacques; and Riquier, Jean-Claude, 5,702,597, Cl. 210-193.200.
Hotta, Mitsuyuki: *See*—
  Ichinose, Susumu; Nishizawa, Yoshinori; Ohuchi, Atsushi; Kidena, Hideshi; and Hotta, Mitsuyuki, 5,702,691, Cl. 424-70.100.
Hotten, Terrence Michael: *See*—
  Bunnell, Charles A.; Hotten, Terrence Michael; Larsen, Samuel D.; and Tupper, David Edward, 5,703,232, Cl. 540-557.000.
Hou, Daqing: *See*—
  Roberts, Jeffrey B.; and Hou, Daqing, 5,703,745, Cl. 361-89.000.
Houck, Andrew W.; and Gibbs, Stephen R., to Boeing Company, The. Variable slew selector switch system. 5,703,774, Cl. 364-424.060.
Houghten Pharmaceuticals, Inc.: *See*—
  Suto, Mark J.; Girten, Beverly E.; Houghten, Richard A.; Loullis, Costas C.; and Tuttle, Ronald R., 5,703,042, Cl. 514-8.000.
Houghten, Richard A.: *See*—
  Suto, Mark J.; Girten, Beverly E.; Houghten, Richard A.; Loullis, Costas C.; and Tuttle, Ronald R., 5,703,042, Cl. 514-8.000.
Hoult, Robert A., to Perkin-Elmer LTD. Carrier and its use in the preparation of samples for spectroscopy. 5,703,681, Cl. 356-36.000.
Houser, Guy M.: *See*—
  McConnell, Kenneth G.; and Houser, Guy M., 5,703,294, Cl. 73-579.000.
Housman, David E., to K.O. Technology, Inc. Inhibitors of alternative alleles of genes as a basis for cancer therapeutic agents. 5,702,890, Cl. 435-6.000.
Houston, Theodore W., to Texas Insturments Incorporated. Power reduction in a temperature compensating transistor circuit. 5,703,517, Cl. 327-312.000.
Hovey Industries, Ltd.: *See*—
  Paterick-Smith, Garril J.; and Gerwing, David H., 5,702,074, Cl. 246-428.000.
Hovorka, Istvan: *See*—
  Argenson, Claude; de Peretti, Ferdinand; and Hovorka, Istvan, 5,702,452, Cl. 623-17.000.
Howa Machinery, Ltd.: *See*—
  Noda, Mitsuo, 5,701,798, Cl. 92-88.000.
Howard, Harry R., Jr., to Pfizer Inc. Heteroarylamino and heteroarylsulfonamido substituted 3-benyzlaminomethyl piperidines and related compounds. 5,703,065, Cl. 514-183.000.
Howard, Henry Edward; and Bonaquist, Dante Patrick, to Praxair Technology, Inc. Cryogenic hybrid system for producing low purity oxygen and high purity nitrogen. 5,701,763, Cl. 62-644.000.
Howard Wright Limited: *See*—
  Wright, Howard Stanley, 5,703,925, Cl. 378-181.000.
Howell, Wayne John: *See*—
  Bertin, Claude Louis; Howell, Wayne John; Hedberg, Erik Leigh; Kalter, Howard Leo; and Kelley, Gordon Arthur, Jr., 5,702,984, Cl. 437-208.000.
Hoy, Marjorie A.; and Presnail, James K., to University of Florida; and University of California. Microinjection methods to transform arthropods with exogenous DNA. 5,702,932, Cl. 435-172.300.
Hrovat, Davorin D.: *See*—
  Tran, Minh N.; and Hrovat, Davorin D., 5,702,164, Cl. 303-139.000.
Hsieh, Ching-Chih: *See*—
  Ting, Tah-Kang Joseph; Hsieh, Ching-Chih; and Rong, Bor-Doou, 5,703,832, Cl. 365-233.000.
Hsieh, Chun-Kun, to Ming Wei Industrial Co., Ltd. Door lock system. 5,702,134, Cl. 292-92.000.
Hsieh, Yi Fong, to LifeGear, Inc. Dual exercise apparatus with resistance adjustment and interconnection arrangement for user movable elements. 5,702,332, Cl. 482-130.000.
Hsu, Bill Y. B.: *See*—
  Ming-Tsung, Liu; Hsu, Bill Y. B.; Chung, Hsien-Dar; and Wu, Der-Yuan, 5,703,408, Cl. 257-784.000.
Hsu, Jerry, to United Microelectronics Corporation. Apparatus for generating graphic coordinates for scan type graphic display. 5,704,027, Cl. 395-131.000.
Hsu, Jung-Hsien: *See*—
  Lee, Chung-Kuang; Hsu, Jung-Hsien; and Tseng, Pin-Nan, 5,702,982, Cl. 437-195.000.
Hsu, Shih Hsiung. Cleaner. 5,702,194, Cl. 401-136.000.
Hsu, Shun-Liang: *See*—
  Tsai, Chaochieh; Hsu, Shun-Liang; and Shue, Shaulin, 5,702,972, Cl. 437-56.000.
Hsu, Steve I.; Nussbaum, Howard S.; Posey, William P.; and Taylor, Stephen D., to Hughes Electronics. Digital frequency divider phase shifter. 5,703,514, Cl. 327-237.000.
Hsu, Wen-Chung. Sport cap. 5,701,610, Cl. 2-425.000.
Hsu, Yimin: *See*—
  Guo, Yimin; Ju, Kochan; and Hsu, Yimin, 5,703,485, Cl. 324-235.000.
HTM Sport S.p.A.: *See*—
  Pietrelli, Nino, 5,701,890, Cl. 128-205.240.
Huang, Chih-Sung. Table lamp. 5,702,180, Cl. 362-410.000.
Huang, Jammy Chin-Ming; and Liu, David Nan-Chou, to Industrial Technology Research Institute. Fabrication of two-part emitter for gated field emission device. 5,702,281, Cl. 445-50.000.
Huang, Jianzhong, to Owens-Corning Fiberglas Technology, Inc. Process for carbon-coating silicate glass fibers. 5,702,498, Cl. 65-453.000.
Huang, Ming-Chou. Electrical apparatus with a detachable power supply base. 5,703,751, Cl. 361-625.000.
Huang, Yuan-Chang: *See*—
  Ying, Shu-Lan; Huang, Yuan-Chang; Chen, Jue-Jye; and Mii, Yuh-Jier, 5,702,956, Cl. 437-8.000.
Hubbard, Tania: *See*—
  Armour, Duncan Robert; Evans, Brian; Middlemiss, David; Naylor, Alan; Pegg, Neil Anthony; Vinader, Maria Victoria; Giblin, Gerard Martin Paul; Hubbard, Tania; Hann, Michael Menteith; Lewell, Xiao-Qing; and Watson, Stephen Paul, 5,703,240, Cl. 546-210.000.
Hubbell Incorporated: *See*—
  Johnson, James W.; and Hillard, Donald H., 5,701,824, Cl. 104-112.000.
  Jorgensen, Robert W., 5,703,327, Cl. 174-53.000.
Huber, Michael T.; Cabell, David W.; Jezek, Robert J., Sr.; and Goulait, David J. K., to Procter & Gamble Company, The. Method for assembling a multi-piece absorbent article. 5,702,551, Cl. 156-73.100.
Huber, Roland, to Hansa Metallwerke AG. Shower head, particularly for a hand shower. 5,702,057, Cl. 239-288.300.
Huebner, Randall J. Phalangeal finger joint prosthesis and method. 5,702,472, Cl. 623-21.000.
Huettner, David: *See*—
  Dauth, Jochen; Herzig, Christian; Deubzer, Bernward; Schnitzer, Klaus; and Huettner, David, 5,703,190, Cl. 528-12.000.
Hughes Aicraft Company: *See*—
  Vaughn, Steven A.; and Verkade, James A., 5,703,531, Cl. 330-149.000.
Hughes Aircraft Company: *See*—
  Phillips, Peter E.; and Desai, Vikram D., 5,703,891, Cl. 372-38.000.
  Taylor, Christopher D., 5,702,649, Cl. 264-1.900.
  Wen, Cheng P.; Rolph, Randy K.; and Zielinski, Timothy T., 5,702,532, Cl. 118-730.000.
Hughes Electronics: *See*—
  Burnett, Robert W., 5,703,875, Cl. 370-381.000.
  Chen, William W.; and Harris, Norman H., 5,702,654, Cl. 264-82.000.
  Farwell, William D., 5,703,790, Cl. 364-492.000.
  Hsu, Steve I.; Nussbaum, Howard S.; Posey, William P.; and Taylor, Stephen D., 5,703,514, Cl. 327-237.000.
  Kay, Stanley E.; Kaul, Pradeep; Parr, Michael I.; Avis, Graham; Corrigan, John E., III; Wendling, Daniel; and Mehta, Ashok D., 5,703,881, Cl. 370-468.000.
  Klaras, Louis F.; and Cohn, David B., 5,703,691, Cl. 356-437.000.
  Lo, Chester K. C.; and Tanaka, Paul I., 5,703,538, Cl. 331-4.000.
  Quan, Clifton; Holbrook, Peter; Batterton, Bill; Fitzgerald, Pat; Roper, Dan; and Takaki, Min, 5,703,599, Cl. 342-368.000.
  Roth, Steve; and Kennedy, Thomas A., 5,703,590, Cl. 342-13.000.
  Swaminathan, Kumar; and Vemuganti, Murthy, 5,704,000, Cl. 395-2.160.
  Wong, Wilbur E.; Lusher, David M.; and Hwang, William B., 5,703,771, Cl. 363-134.000.
  Yin, Khin Swe; Yu, Kevin; and Gunther, John E., 5,702,805, Cl. 428-195.000.
Hughes, Frank J., to Vision-Ease Lens, Inc. Photochromic chromene derivatives. 5,702,645, Cl. 252-586.000.
Huh, Yeung H.: *See*—
  Choi, Young Tai; and Huh, Yeung H., 5,701,754, Cl. 62-244.000.
Hui, Joseph Wing-Tak: *See*—
  Marshall, Trevor; Hui, Joseph Wing-Tak; and Wong, Thomas, 5,701,981, Cl. 191-12.400.
Hujimaki, Kumiko, to Mesotes Co. Ltd. Testing device in a low-voltage, low-frequency beautifying apparatus for detecting lead cord discontinuities. 5,702,423, Cl. 607-2.000.
Hulinsky, Raymond: *See*—
  Nabity, Frederick Alan; Wright, Paul George; Hulinsky, Raymond; and Carson, Douglas Timothy, 5,701,646, Cl. 29-25.350.
Hull, Carmie A.: *See*—
  Sun, Xiao; and Hull, Carmie A., 5,703,885, Cl. 371-27.000.
Hull, Richard; and Yach, Randy L., to Microchip Technology Incorporated. Overcharge/discharge voltage regulator for EPROM memory array. 5,703,809, Cl. 365-185.250.
Hull, Richard: *See*—
  Hinkle, Stephen C.; and Hull, Richard, 5,703,416, Cl. 307-89.000.
Hull, Tommy Lee: *See*—
  Quenan, Gary O.; and Hull, Tommy Lee, 5,702,206, Cl. 405-227.000.
Hulscher, Mark E., to Boeing Company, The. Rotational arm-type contact feeding system. 5,702,030, Cl. 221-254.000.
Hulvey, Robert W.: *See*—
  Shreve, Gregory A.; Guzzino, Kim S.; and Hulvey, Robert W., 5,703,656, Cl. 348-549.000.
Humber, Jeffrey A., to IPS Corporation. Insulator for mounting pipe in metal wall stud. 5,702,076, Cl. 248-57.000.
Humburg, Michael, to J. Eberspächer GmbH & Co. Vehicle heater with fuel pump cooling. 5,702,055, Cl. 237-214.000.

Hummer, Jacques; Dive, Michel; Laurençon, Michel; and Clauze, Jacques, to Smith & Nephew Richards France. Trochlea implant for a femoro-patellar prosthesis. 5,702,459, Cl. 623-20.000.
Hundertmark, James M. Steering mechanism. 5,702,[illegible]75, Cl. 440-61.000.
Hunsicker, Jeffrey C.; Verhoeven, John F.; and McCunn, F. Scott, to Henkel Corporation. Method of producing a tocopherol product. 5,703,251, Cl. 549-410.000.
Hunt, Randy D. Portable tree holding device. 5,702,[illegible]86, Cl. 248-519.000.
Hunt, Tracy K.; and Schwarzer, Joerg, to Henkel Corporation. Recovery of Tocopherols. 5,703,252, Cl. 549-413.000.
Hunt-Wesson, Inc.: *See*—
Yang, Angel A.; Druz, Loren L.; and Berman, Terry, 5,702,745, Cl. 426-242.000.
Hunt, William C.; and Meyers, Torin T., to Ohmeda Inc. Extruded wobble plate optical alignment device. 5,703,683, Cl. 356-301.000.
Hunter Innovations: *See*—
Hansen, Louis J., Jr.; Maligad, Luciano J., Jr.; and Powell, Douglas H., 5,701,927, Cl. 137-271.000.
Hunter, Robert O., Jr.: *See*—
Smith, Adlai H.; Hunter, Robert O., Jr.; McArthur, Bruce; Blair, Steven; and Wilkinson, Jim, 5,702,662, Cl. 264-400.000.
Hurd, Frederick E., to Innovation Plus Limited. Lift jack for wheeled vehicle. 5,702,089, Cl. 254-422.000.
Hurite, John M., to Tachi-S Engineering, U.S.A., Inc. Adjustable armrest mechanism. 5,702,157, Cl. 297-411.380.
Hurlbut, Amy O.: *See*—
Sutterlin, Philip H.; Stewart, J. Marcus; and Hurlbut, Amy O., 5,703,766, Cl. 363-35.000.
Huron Tech Canada, Inc.: *See*—
Clifford, Arthur L.; Dong, Dennis F.; Mumby, Timothy A.; and Rogers, Derek J., 5,702,587, Cl. 205-760.000.
Hurst, Jerry C.; and Potteiger, Brian D., to Lucent Technologies Inc. Optical fiber spool and method of loading spool. 5,702,06[illegible], Cl. 242-601.000.
Hush, Glen; Seibert, Mike; Mailloux, Jeff; and Thomann, Mark R., to Micron Technology, Inc. Video random access memory chip configured to transfer data in response to an internal write signal. 5,703,[illegible]26, Cl. 365-230.050.
Hushbeck, Donald F.; Yuan, Yusheng; and Davison, Douglas W., to Halliburton Company. Downhole tool apparatus and method of limiting packer element extrusion. 5,701,959, Cl. 166-387.000.
Hutchinson: *See*—
Mahin, Daniel; and Blin, Philippe, 5,702,109, Cl. 277-34.000.
Hutchinson, Timothy A.: *See*—
Hayes, Earl J.; Hutchinson, Timothy A.; Hein, David A.; Shen, Alexander; and Pike-Biegunski, Michael J., 5,703,[illegible]57, Cl. 361-752.000.
Hutter, Louis N.; and Smith, Jeffrey P., to Texas Instruments Incorporated. Method for making an isolated vertical transistor. 5,702,959, Cl. 437-31.000.
Hutz, William V.: *See*—
Boehringer, Wilfred E.; Verhoeven, Teunes; and Hutz, William V., 5,701,801, Cl. 92-166.000.
Huwil-Werke GmbH: *See*—
Müller, Hans Friedrich, 5,702,167, Cl. 312-221.000.
Huyser, Richard F.: *See*—
Matthai, John T.; and Huyser, Richard F., 5,702,[illegible]15, Cl. 606-178.000.
Hwa Shin Musical Instrument Co., Ltd.: *See*—
Liao, Tsun-Chi, 5,703,306, Cl. 84-421.000.
Hwang, William B.: *See*—
Wong, Wilbur E.; Lusher, David M.; and Hwang, William B., 5,703,771, Cl. 363-134.000.
Hydra-Tech International Corporation: *See*—
Reesor, David Warren; and Reesor, David Roy Joseph, 5,701,649, Cl. 29-252.000.
Hyoda, Junkoh: *See*—
Fujiwara, Wataru; Hyoda, Junkoh; Yamazaki, Kenichi; and Kitamura, Noriko, 5,703,157, Cl. 524-822.000.
Hyun, Kwangsoo. Fire grate having fluctuational profile in circumferential direction thereof. 5,701,881, Cl. 126-163.00R.
Hyundai Electronics Industries Co., Ltd.: *See*—
Choi, Kyeong Keun, 5,702,970, Cl. 437-52.000.
Kim, Jeong Ho, 5,702,974, Cl. 437-60.000.
Kim, Jeoung Woo, 5,702,965, Cl. 47-43.000.
Kim, Myung Seon, 5,702,867, Cl. 430-291.000.
Lee, Seong Sam; and Kwon, Yong Don, 5,703,8[illegible]6, Cl. 371-37.100.
Ryu, Myung Sun, 5,703,812, Cl. 365-189.050.
Shin, Chan Soo; and Kim, Choon Hwan, 5,702,5[illegible]8, Cl. 156-644.100.
Hyundai Motor Company: *See*—
Song, Jae Myong, 5,702,121, Cl. 280-689.000.
Hyundai Motor Company, Ltd.: *See*—
Soung, Gwang-Geong, 5,703,776, Cl. 364-424.00[illegible].
I.P. Bardin Central Research Institute of Iron and Steel Industry: *See*—
Paramonov, Vladimir A.; Tychinin, Anatolij I.; Moroz, Anatolij I.; Birger, Boris L.; Frommann, Klaus; Haupt, Werner; and Ottersbach, Walter, 5,702,528, Cl. 118-623.000.
Iakovides, Panos, to Procter & Gamble Company, The. Thickened aqueous detergent compositions with improved cleaning performance. 5,703,036, Cl. 510-427.000.
Iandolo, John J.; and Crupper, Scott, to Kansas State University Research Foundation. Broad spectrum antibiotic peptide. 5,70[illegible],040, Cl. 514-2.000.
Iba, Yoichi: *See*—
Takahashi, Koichi; and Iba, Yoichi, 5,703,605, Cl. 345-8.000.
Ichihashi, Takao: *See*—
Matsumoto, Masashi; Saito, Yasushi; Ichihashi, Takao; and Yamada, Shuji, 5,703,888, Cl. 371-51.100.
Ichikawa, Hidehito: *See*—
Goto, Shinichi; Kobayashi, Masao; Kuzuya, Yasuhisa; and Ichikawa, Hidehito, 5,702,782, Cl. 428-31.000.
Ichikawa, Hiroyuki: *See*—
Ikeda, Yoshinori; Ichikawa, Hiroyuki; Kurita, Mitsuru; Hayashi, Kimiyoshi; Honma, Toshio; and Horie, Yoshiko, 5,703,694, Cl. 358-296.000.
Ichikawa, Shunji: *See*—
Suzuki, Fumio; Koike, Nobuaki; Shimada, Junichi; Nakamura, Joji; Shiozaki, Shizuo; Kitamura, Shigeto; Ichikawa, Shunji; Kase, Hiroshi; and Nonaka, Hiromi, 5,703,085, Cl. 514-263.000.
Ichiki, Yoshiyuki: *See*—
Fujimura, Hiroyuki; Suzuki, Takayuki; Yamada, Norio; Ichiki, Yoshiyuki; Maezawa, Akihiko; and Hayashi, Hideo, 5,702,572, Cl. 204-157.150.
Ichinohe, Shoji; Yamazaki, Toshio; and Yamamoto, Akira, to Shin-Etsu Chemical Co., Ltd. Modification of resins with isocyanatosiloxanes. 5,703,159, Cl. 525-54.300.
Ichinohe, Shoji: *See*—
Hiratani, Haruyuki; Nakada, Kazuhiko; Yamazaki, Toshio; and Ichinohe, Shoji, 5,703,143, Cl. 523-107.000.
Ichinose, Susumu; Nishizawa, Yoshinori; Ohuchi, Atsushi; Kideaa, Hideshi; and Hotta, Mitsuyuki, to Kao Corporation. Flavanonol derivatives and hair-nourishing, hair growing compositions containing the derivatives. 5,702,691, Cl. 424-70.100.
ICON Health & Fitness, Inc.: *See*—
Watterson, Scott R.; Dalebout, William T.; and Miller, Frank Troy, 5,702,325, Cl. 482-54.000.
ICOS Corporation: *See*—
Beavo, Joseph A.; Corbin, Jackie D.; Ferguson, Kenneth M.; Francis, Sharron H.; Kadlecek, Ann; Loughney, Kate; McAllister-Lucas, Linda M.; Sonnenburg, William K.; and Thomas, Melissa K., 5,702,936, Cl. 435-196.000.
Kilgannon, Patrick D.; and Gallatin, W. Michael, 5,702,917, Cl. 435-69.100.
Ida, Yuichi: *See*—
Kato, Hironori; Nakao, Masanori; and Ida, Yuichi, 5,702,260, Cl. 439-164.000.
Ide, Horishi: *See*—
Kirino, Fumiyoshi; Toda, Tsuyoshi; Ide, Horishi; Sugiyama, Hisataka; Saito, Atsushi; Tsuchinaga, Hiroyuki; Maeda, Takeshi; Kugiya, Fumio; Kaku, Toshimitsu; Mita, Seiichi; Shigematsu, Kazuo; and Ouchi, Yasuhide, 5,703,855, Cl. 369-54.000.
Idel, Karsten-Josef: *See*—
Gittinger, Andreas; Wulff, Claus; Haupt, Heinrich; and Idel, Karsten-Josef, 5,703,204, Cl. 528-486.000.
Idemitsu Kosan Co., Ltd.: *See*—
Nakano, Akikazu, 5,703,164, Cl. 525-133.000.
Idemitsu Petrochemical Co., Ltd.: *See*—
Goto, Shuichi; Tanaka, Kenichi; and Odaka, Hiroshi, 5,701,996, Cl. 206-287.000.
Ifkovits, Michael R.: *See*—
Gottlieb, Robert K.; Grossman, Richard A.; Ifkovits, Michael R.; and Ruess, Philip G., 5,702,098, Cl. 270-58.060.
Iguchi, Masayoshi: *See*—
Omura, Kazuhiko; Iguchi, Masayoshi; Yoshiyama, Masatoshi; and Nishikawa, Hiroshi, 5,703,996, Cl. 386-68.000.
Iguchi, Satoshi: *See*—
Takeshima, Shinichi; Tanaka, Toshiaki; and Iguchi, Satoshi, 5,702,675, Cl. 423-213.500.
Igura, Toshinori; and Fukuda, Masaru, to Yazaki Corporation. Waterproofness checking jig for a waterproof connector. 5,703,279, Cl. 73-40.000.
Igura, Toshinori; and Fukuda, Masaru, to Yazaki Corporation. Method and apparatus for checking waterproof connectors for waterproofness. 5,703,280, Cl. 73-40.000.
Ihara, Takeji: *See*—
Osada, Takayuki; Tsuda, Fumishiro; Saito, Norio; Ihara, Takeji; Wagatsuma, Yoshio; and Moriya, Hitoshi, 5,703,557, Cl. 336-92.000.
Iida, Eiichi: *See*—
Toyoshima, Takayuki; and Iida, Eiichi, 5,702,545, Cl. 152-209.00A.
Iida, Tetsuya; Jinno, Satoshi; and Higuchi, Takanobu, to Pioneer Electronic Corporation. Optical recording medium. 5,702,792, Cl. 428-64.100.
Iida, Tomohide: *See*—
Nagai, Takashi; Honda, Nobuyasu; Iida, Tomohide; Akiyama, Toshiaki; Kuramashi, Koji; and Toda, Asao, 5,702,857, Cl. 430-101.000.
Iida, Yoshihiro: *See*—
Yabe, Hisao; Iida, Yoshihiro; Suzuki, Akira; Ito, Hideo; Tashiro, Yoshio; Yamazaki, Minoru; Tamada, Osamu; Nakazawa, Masaaki; and Yamaya, Koji, 5,702,347, Cl. 600-121.000.
Iimura, Yukio: *See*—
Tarumoto, Norihiro; Miyashita, Hiroyuki; Iimura, Yukio; and Mikami, Koichi, 5,702,847, Cl. 430-5.000.
Iino, Koichi: *See*—
Uchida, Masaki; Naito, Takaki; Shirai, Hiroshi; Iino, Koichi; and Okazaki, Hiroyuki, 5,702,269, Cl. 439-496.000.
Iizuka, Akira, to Nippon Steel Corporation. Video signal encoder. 5,703,654, Cl. 348-446.000.
Iizuka, Kunihiko: *See*—

Miyamoto, Masayuki; Iizuka, Kunihiko; Fujio, Mitsuhiko; and Matsui, Hirofumi, 5,703,503, Cl. 327-58.000.
Ike, Tetsuji; Inoue, Takeshi; and Ozaki, Yoshihiro, to Yoshitomi Pharmaceutical Industries, Ltd. Phosphonite or phosphonate compounds and use thereof. 5,703,150, Cl. 524-125.000.
Ikeda, Hayato, to Kabushiki Kaisha Toyoda Jiboshokki Seisakusho. Reciprocating piston type compressor having a discharge chamber with a plurality of pulsation attenuating subchambers. 5,702,236, Cl. 417-269.000.
Ikeda, Hiroaki, to NEC Corporation. Serial access memory device including memory sections having different latencies. 5,703,822, Cl. 365-221.000.
Ikeda, Masami: *See*—
Arashima, Teruo; Kimura, Makiko; Kashino, Toshio; Sugitani, Hiroshi; Hattori, Yoshifumi; Ikeda, Masami; Saito, Asao; Masuda, Kazuaki; Saito, Akio; and Orikasa, Tsuyoshi, 5,703,632, Cl. 347-47.000.
Higuma, Masahiko; Ikeda, Masami; Asai, Naohito; Abe, Tsutomu; Kashino, Toshio; Ohshima, Noriyoshi; Okazaki, Takeshi; Sugimoto, Hitoshi; and Tajima, Hiroki, 5,701,995, Cl. 206-205.000.
Ikeda, Tetsufumi: *See*—
Matsumoto, Takayuki; Ikeda, Tetsufumi; and Kojima, Akiyoshi, 5,702,795, Cl. 428-66.600.
Ikeda, Yoshinori; Ichikawa, Hiroyuki; Kurita, Mitsuru; Hayashi, Kimiyoshi; Honma, Toshio; and Horie, Yoshiko, to Canon Kabushiki Kaisha. Image processing apparatus and method in which a discrimination standard is set and displayed. 5,703,694, Cl. 358-296.000.
Ikegami, Takaaki; Rokutanzono, Takashi; and Kurimoto, Eiji, to Ricoh Company, Ltd. Electrophotographic photoconductor containing a mixture of a phenol compound and an organic sulfur-containing compound. 5,702,855, Cl. 430-83.000.
Iketani, Masayuki; and Ohbayashi, Shigeki, to Mitsubishi Denki Kabushiki Kaisha. Power on reset circuit for generating reset signal at power on. 5,703,510, Cl. 327-143.000.
Ikeya, Akira, to Yamaha Corporation. Tone generating apparatus with FM sound source and PCM sound source. 5,703,307, Cl. 84-603.000.
Ikura, Kiyoshi: *See*—
Kawada, Naoki; Yamazaki, Noritsugu; Imoto, Takafumi; and Ikura, Kiyoshi, 5,702,928, Cl. 435-121.000.
Il-Yang Pharm. Co., Ltd.: *See*—
Kim, Su Ung; Kim, Dong Yeon; Chung, Gi ju; Hong, Sung Kol; Park, Sung Jun; Nam, Sang Hoon; and Lee, Yong Suk, 5,703,097, Cl. 514-338.000.
Ilford A.G.: *See*—
Fryberg, Mario; Göttel, Otto; and Stauner, Thomas, 5,702,866, Cl. 430-264.000.
Illian, Gerhard: *See*—
Escher, Claus; Harada, Takamasa; Illian, Gerhard; Rösch, Norbert; and Wingen, Rainer, 5,702,639, Cl. 252-299.000.
Imaeda, Takao; and Hirai, Masana, to Kabushiki Kaisha Toyota Chuo Kenkyusho. Methods for detection of mutagens using luminescence gene. 5,702,883, Cl. 435-4.000.
Image S.A.: *See*—
de Saint-Romain, Pierre; and Heraud, Alain, 5,702,511, Cl. 106-31.320.
Imai, Genji; Iwasawa, Naozumi; and Yamaoka, Tsuguo, to Kansai Paint Co., Ltd. Process for resist pattern formation using positive electrodeposition photoresist compositions. 5,702,872, Cl. 430-326.000.
Imai, Kiyoshi; Watanabe, Hideaki; Kinoshita, Hiromi; and Yokoyama, Dai, to Matsushita Electric Industrial Co., Ltd. Axial type electronic component inserting apparatus. 5,701,662, Cl. 29-741.000.
Imai, Shinjirou, to Nisshin Flour Milling Co., Ltd. Method for the extraction of glicentin or glicentin analogous substances. 5,702,922, Cl. 435-71.200.
Imaizumi, Hisaakira: *See*—
Imamura, Toshihide; Kadotani, Kanichi; Hayakashi, Bunji; Imaizumi, Hisaakira; Shakushi, Tetsuo; Matsumoto, Toshihiko; and Watanabe, Genichiro, 5,701,950, Cl. 165-222.000.
Imamura, Toshihide; Kadotani, Kanichi; Hayakashi, Bunji; Imaizumi, Hisaakira; Shakushi, Tetsuo; Matsumoto, Toshihiko; and Watanabe, Genichiro, to Komatsu Ltd. Water feed device for humidification and air conditioning apparatus incorporating the same. 5,701,950, Cl. 165-222.000.
Imanari, Hiroyuki; and Otobe, Hiroshi, to Kabushiki Kaisha Toshiba. Control device for a continuous hot-rolling mill. 5,701,774, Cl. 72-8.600.
Imazaki, Kazunori: *See*—
Hino, Ichiro; and Imazaki, Kazunori, 5,703,947, Cl. 379-419.000.
Imazu, Shirou: *See*—
Yamasaki, Kazuyuki; Kataoka, Masaki; Sakata, Kazuyuki; and Imazu, Shirou, 5,702,594, Cl. 210-151.000.
Yamasaki, Kazuyuki; Yokotani, Atsushi; and Imazu, Shirou, 5,702,604, Cl. 210-603.000.
Imhof, Gerald: *See*—
Wonka, Boris; Behrendt, Jürgen; and Imhof, Gerald, 5,701,681, Cl. 34-97.000.
Immtech International, Inc.: *See*—
Makhlouf, Samar; Pankow, Mark L.; Anderson, Byron E.; and Bean, Pamela, 5,702,904, Cl. 435-7.100.
Imoto, Katsuyuki, to Hitachi Cable, Ltd. Rare earth element-doped multiple-core optical fiber and optical systems using the same field of the invention. 5,703,987, Cl. 385-126.000.
Imoto, Takafumi: *See*—
Kawada, Naoki; Yamazaki, Noritsugu; Imoto, Takafumi; and Ikura, Kiyoshi, 5,702,928, Cl. 435-121.000.
Imperial Chemical Industries plc: *See*—
Gillis, Herbert Russell; Stanssens, Dirk; De Vos, Rik; Postema, Aaldrik Roelf; and Randall, David, 5,703,136, Cl. 521-128.000.
Implant Innovations, Inc.: *See*—
Rogers, Dan Paul; and Smith, Edward Freer, III, 5,702,252, Cl. 433-173.000.
Implex Corporation: *See*—
Averill, Robert G.; Cohen, Robert C.; and Zubok, Rafail, 5,702,487, Cl. 623-23.000.
Imra America, Inc.: *See*—
Farrier, Michael G.; Kamasz, Stacy R.; Ma, Fred S. F.; and Bendett, Mark P., 5,703,639, Cl. 348-241.000.
IMRA Europe SA: *See*—
Bonnefoy, Pierre, 5,703,834, Cl. 367-99.000.
Imran, Mir A.: *See*—
Powles, Trevor J.; and Imran, Mir A., 5,701,910, Cl. 128-764.000.
Ina Wälzlager Schaeffler KG: *See*—
Schmid, Michael, 5,702,314, Cl. 474-94.000.
Inaba, Hidehiro: *See*—
Ishida, Naruo; Saijyo, Yoshio; Arakawa, Shingo; Watanabe, Kimiaki; and Inaba, Hidehiro, 5,703,295, Cl. 73-593.000.
Inaba, Tsuneo: *See*—
Shiratake, Shinichiro; Takashima, Daisaburo; Tsuchida, Kenji; and Inaba, Tsuneo, 5,703,817, Cl. 365-200.000.
Inaba, Yutaka: *See*—
Mouri, Akihiro; Toyono, Tsutomu; Kaneko, Shuzo; Inaba, Yutaka; and Kanbe, Junichiro, 5,703,614, Cl. 345-97.000.
Inakoshi, Daisuke: *See*—
Matsuhashi, Kunihiko; Sodeyama, Hideo; and Inakoshi, Daisuke, 5,702,192, Cl. 400-613.000.
Inamoto, Tadayoshi: *See*—
Murakami, Keiichi; Inamoto, Tadayoshi; Komuro, Hirokazu; Mashio, Hideaki; and Suzuki, Toshio, 5,703,630, Cl. 347-45.000.
Inayoshi, Satoshi: *See*—
Yamaguchi, Hiroyuki; Naito, Masayuki; Inayoshi, Satoshi; Doi, Nobuyuki; Saida, Kazunori; and Sumiya, Yasuhiko, 5,701,949, Cl. 165-42.000.
Inazu, Mizubo: *See*—
Shudo, Koichi; Sugioka, Tatsuo; Inazu, Mizubo; Tanaka, Hideyuki; Inoue, Tsutomu; and Kitamura, Kazuyuki, 5,703,128, Cl. 514-563.000.
Incline Technologies Inc.: *See*—
Martin, John P.; Skewes, Susan M.; and Raddatz, Russell E., 5,702,992, Cl. 442-123.000.
Industrial Technology, Inc.: *See*—
Galloway, George G.; and Siglinger, Paul R., 5,703,928, Cl. 379-21.000.
Industrial Technology Research Institute: *See*—
Huang, Jammy Chin-Ming; and Liu, David Nan-Chou, 5,702,281, Cl. 445-50.000.
Li, Tze Fen; Pengwu, Chung-Mou; Chen, Cheng-Der; and Sun, Chung-Yu, 5,704,004, Cl. 395-2.520.
Tsui, Bing-Yue, 5,702,566, Cl. 156-643.100.
Ingersoll-Rand Company: *See*—
Warner, Donald R.; McCallops, John A.; and Estep, John M., 5,701,961, Cl. 173-15.000.
Innotech, Inc.: *See*—
Gupta, Amitava; Blum, Ronald D.; Iyer, Venkatramani S.; and Nagg, Paul J., 5,702,819, Cl. 428-412.000.
Innovation Plus Limited: *See*—
Hurd, Frederick E., 5,702,089, Cl. 254-422.000.
Innovative Construction Technologies Corporation: *See*—
Tremelling, Tim Cyril, 5,701,710, Cl. 52-426.000.
Inokuti, Yukio, to Kawasaki Steel Corporation. High magnetic density, low iron loss, grain oriented electromagnetic steel sheet and a method for making. 5,702,541, Cl. 148-308.000.
Inoue, Atsushi: *See*—
Matsuura, Tatsuo; and Inoue, Atsushi, 5,702,144, Cl. 296-37.130.
Inoue, Kiyoshi; and Hirata, Masakuni, to Nippon Oil Company Limited. Method and apparatus for replenishing the lubricating oil of an internal combustion engine. 5,701,862, Cl. 123-196.00S.
Inoue, Mikihisa: *See*—
Kaku, Nobuyuki; Ono, Seiji; Maehara, Yoshimi; and Inoue, Mikihisa, 5,702,062, Cl. 242-338.400.
Inoue, Takeshi: *See*—
Ike, Tetsuji; Inoue, Takeshi; and Ozaki, Yoshihiro, 5,703,150, Cl. 524-125.000.
Inoue, Tsutomu: *See*—
Shudo, Koichi; Sugioka, Tatsuo; Inazu, Mizubo; Tanaka, Hideyuki; Inoue, Tsutomu; and Kitamura, Kazuyuki, 5,703,128, Cl. 514-563.000.
Insert Enterprise Co., Ltd.: *See*—
Wang, Tsan-Chi, 5,702,261, Cl. 439-188.000.
Institut Francais du Petrole: *See*—
Prevost, Isabelle; and Rojey, Alexandre, 5,701,761, Cl. 62-613.000.
Institute of Occupational Safety and Health, Council of Labor Affairs, Executive Yuan: *See*—
Shih, Tung-Sheng; Yeh, Wen-Yu; Chen, Chih-Chieh; and Lai, Chane-Yu, 5,702,506, Cl. 95-287.000.
Instituto Analitico Tuscanese S.r.l.: *See*—
Pandolfo, Salvatore Mario, 5,702,600, Cl. 210-222.000.
Instrumentation Technology Associates, Inc.: *See*—
Alvarado, Ulises R., 5,702,182, Cl. 366-130.000.

Integrated Device Technology, Inc.: *See—*
Min, Sung-Ki, 5,703,497, Cl. 326-33.000.
Integument Technologies, Inc.: *See—*
Koloski, Timothy S.; and Vargo, Terrence G., 5,703,173, Cl. 525-326.200.
Intel Corporation: *See—*
Astle, Brian, 5,703,966, Cl. 382-236.000.
Sabin, Gregory D., 5,703,496, Cl. 326-27.000.
Severn, E. Thomas, 5,702,256, Cl. 439-71.000.
Shadan, Victor; and Nigam, Anurag, 5,703,803, Cl. 365-49.000.
Shipman, Mark S., 5,704,035, Cl. 395-183.180.
InterDigital Technology Corporation: *See—*
Schilling, Donald L., 5,703,874, Cl. 370-335.000.
Interface, Inc.: *See—*
Thompson, Andrew, 5,702,796, Cl. 428-95.000.
Intermec Corporation: *See—*
Jovanovich, Alan F.; Warren, Bruce G.; Charron, Duane G.; and Duke, Steven B., 5,703,950, Cl. 380-23.000.
International Business Machine Corp.: *See—*
Redpath, Sarah D., 5,704,050, Cl. 395-339.000.
International Business Machines Corporation: *See—*
Allen, Wade C.; Goodwin, Jeremy Philip; Nielson, Robert Louis; Reder, Paul Joseph; and Toltzman, Douglas, 5,704,041, Cl. 395-200.150.
Allison, Jeffery Daniel, 5,703,578, Cl. 341-22.000.
Badovinatz, Peter Richard; Chandra, Tushar Deepak; Kirby, Orvalle Theodore; and Pershing, John Arthur, Jr., 5,704,032, Cl. 395-182.020.
Berberich, James William; Berg, Lowell James; Boutaghou, Zine-Eddine; Heath, John S.; and Neubauer, Jerry Lee, 5,703,734, Cl. 360-97.020.
Bertin, Claude Louis; Howell, Wayne John; Hedberg, Erik Leigh; Kalter, Howard Leo; and Kelley, Gordon Arthur, Jr., 5,702,984, Cl. 437-208.000.
Bigus, Joseph Phillip, 5,704,012, Cl. 395-22.000.
Boggs, Andrew Keith; Hoang, Quy N.; Jacobs, Joe; Mullen, John Mark; Purrington, Challis; and Weaver, Laura A., 5,703,872, Cl. 370-252.000.
Brodsky, William Louis; Herard, James Daniel; Macek, Thomas George; Sharp, Timothy Lee; and Shovlowsky, George Joseph, 5,703,331, Cl. 174-254.000.
Canestaro, Michael James, 5,701,654, Cl. 29-434.000.
Cline, Troy Lee; Isensee, Scott Harlan; Poston, Ricky Lee; and Werner, Jon Harald, 5,704,009, Cl. 395-2.840.
Doune, David Elson; Ellis, Wayne Frederick; and Hedberg, Erik Leigh, 5,703,823, Cl. 365-222.000.
Dusault, Maurice, 5,703,878, Cl. 370-395.000.
Evans, Edward Kelley; and West, Roderick Michael Peters, 5,703,622, Cl. 345-154.000.
George, Jonel; Glassen, Steven Gardner; Krygowski, Matthew Anthony; Kim, Moon Ju; Preston, Allen Herman; and Stucki, David Emmett, 5,704,055, Cl. 395-402.000.
Gould, Scott Whitney; Furtek, Frederick Curtis; Keyser, Frank Ray, III; Worth, Brian A.; and Zittritsch, Terrance John, 5,703,498, Cl. 326-40.000.
Koyama, Seiji; Nozawa, Tohru; Terukina, Asao; and Suzuki, Yasusuke, 5,703,582, Cl. 341-120.000.
Lu, Huizong; and Taheri, Ali Reza, 5,703,684, Cl. 356-357.000.
McKean, Dennis Richard; and Renaldo, Alfred Floyd, 5,702,756, Cl. 427-127.000.
Murray, Thomas P., 5,703,769, Cl. 363-50.000.
Saenger, Katherine Lynn; and Kotecki, David Edward, 5,701,647, Cl. 29-25.420.
Sartwell, Alfred Leonard; and Thoma, Endre Philip, 5,703,495, Cl. 324-763.000.
Shin, Hyun Jong; and Xiao, Peter Hong, 5,703,532, Cl. 330-253.000.
Tsukamoto, Takeshi; Suzuki, Hiroshi; and Suzuki, Akira, 5,702,087, Cl. 248-638.000.
International Telepresence Corporation: *See—*
Greening, Anthony B.; and Mitchell, Thomas N., 5,701,912, Cl. 128-773.000.
International Visual Corp.: *See—*
Current, Wayne A., 5,701,695, Cl. 40-606.000.
InterVoice, Inc.: *See—*
Sattar, Sohail; and Polsky, Steven E., 5,703,940, Cl. 379-201.000.
Inui, Takanari: *See—*
Shimizu, Osamu; Harada, Kazuya; Wada, Shinichi; Fujimoto, Tetsuya; and Inui, Takanari, 5,702,190, Cl. 400-341.000.
Inui, Takashi: *See—*
Abe, Koichi; and Inui, Takashi, 5,703,499, Cl. 326-62.000.
Ionics, Incorporated: *See—*
Goldstein, Arthur L.; Papastavros, Theodore G.; and Richard, Emery J., 5,702,582, Cl. 204-632.000.
Iowa State University Research Foundation: *See—*
McConnell, Kenneth G.; and Houser, Guy M., 5,703,294, Cl. 73-579.000.
IPS Corporation: *See—*
Humber, Jeffrey A., 5,702,076, Cl. 248-57.000.
Iqbal, Mohamed: *See—*
Lewis, Michael E.; Kauer, James C.; Smith, Kevin R.; Callison, Kathleen V.; Baldino, Frank; Neff, Nicola; and Iqbal, Mohamed, 5,703,045, Cl. 514-12.000.
Iqbal, Zafar: *See—*
Cui, Changxing; Baughman, Ray H.; Iqbal, Zafar; Kazmar, Theodore R.; and Dahlstrom, David K., 5,702,629, Cl. 252-62.90R.
Irie, Tadashi: *See—*
Nishitani, Yasuhiro; Irie, Tadashi; and Nishino, Yutaka, 5,703,243, Cl. 548-541.000.
Iritani, Kunio, to Nippondenso Co., Ltd. Air conditioning apparatus. 5,701,753, Cl. 62-211.000.
Irrgang, Bernhard: *See—*
Birkhan, Horst; Fender, Michael; Irrgang, Bernhard; Löffert, Christiane; and Schüssler, Simone, 5,703,035, Cl. 510-423.000.
Irwin, Larry E.: *See—*
Funk, Michael R.; Irwin, Larry E.; and Foster, Michael D., 5,702,588, Cl. 205-695.000.
Isa, Satoshi, to NEC Corporation. Semiconductor memory device. 5,703,824, Cl. 365-225.700.
Isaka, Akihiko, to Sankyo Seiki Mfg. Co., Ltd. Music box. 5,703,305, Cl. 84-95.100.
Iscar Ltd.: *See—*
Boianjiu, Gideon, 5,702,210, Cl. 407-100.000.
Isco, Inc.: *See—*
Nabity, Frederick Alan; Wright, Paul George; Hulinsky, Raymond; and Carson, Douglas Timothy, 5,701,646, Cl. 29-25.350.
Isenberg, O. Marlene: *See—*
Hardy, Mary Anne; and Isenberg, O. Marlene, 5,701,956, Cl. 166-295.000.
Isensee, Scott Harlan: *See—*
Cline, Troy Lee; Isensee, Scott Harlan; Poston, Ricky Lee; and Werner, Jon Harald, 5,704,009, Cl. 395-2.840.
Ishibashi, Yoichi: *See—*
Nakano, Yasuhiko; and Ishibashi, Yoichi, 5,701,851, Cl. 123-41.100.
Ishida, Naruo; Saijyo, Yoshio; Arakawa, Shingo; Watanabe, Kimiaki; and Inaba, Hidehiro, to NKK Corporation; and Kabushiki Kaisha Fuji Ceramics. Vibration sensing method and apparatus therefor. 5,703,295, Cl. 73-593.000.
Ishiga, Hiroshi: *See—*
Fujii, Hideaki; Ishiga, Hiroshi; Harayama, Masatoshi; and Oka, Motohiro, 5,703,433, Cl. 313-484.000.
Ishigaki, Shinichi: *See—*
Osawa, Yukio; Shimamoto, Katsuhiko; Ishigaki, Shinichi; Araki, Hitoshi; Nakata, Yukio; and Fujimaru, Atsushi, 5,702,501, Cl. 75-255.000.
Ishiguro, Masaji: *See—*
Iwata, Hiromitsu; Nakatsuka, Takashi; Tanaka, Rie; and Ishiguro, Masaji, 5,703,068, Cl. 514-195.000.
Ishihara, Katsunori: *See—*
Mikata, Yuuichi; Ishihara, Katsunori; and Okumura, Katsuya, 5,702,529, Cl. 118-722.000.
Ishihara, Yoshio; Masusaki, Hiroshi; Wu, Shang-Qian; and Matsumoto, Koh, to Nippon Sanso Corporation. Infrared spectroscopic analysis method for gases and device employing the method therein. 5,703,365, Cl. 250-339.130.
Ishii, Kazuo: *See—*
Watari, Masao; Ishii, Kazuo; Kato, Yasuhiko; Ogawa, Hiroaki; Omote, Masanori; Watanabe, Kazuo; and Minamino, Katsuki, 5,704,013, Cl. 395-23.000.
Ishii, Kazuyoshi, to Canon Kabushiki Kaisha. Magnetic head for magnetooptical recording apparatus. 5,703,839, Cl. 369-13.000.
Ishii, Kiyoshi: *See—*
Nakai, Satoru; Kaneta, Mayumi; Kikumoto, Yoshikazu; Hong, Yeong-Man; Kawai, Kazuyoshi; Takegata, Setsuko; Ishii, Kiyoshi; Yanagihara, Yasuo; and Hirai, Yoshikatsu, 5,702,698, Cl. 424-85.200.
Ishii, Makoto: *See—*
Komatsuki, Masato; Ishii, Makoto; Adachi, Yukishige; Makino, Keiichi; and Miyazaki, Shinichi, 5,702,549, Cl. 152-548.000.
Ishii, Takahiro: *See—*
Fujita, Masayuki; and Ishii, Takahiro, 5,703,184, Cl. 526-220.000.
Ishii, Toru: *See—*
Mashimo, Kiyokazu; Ojima, Fumio; Ishii, Toru; and Nukada, Katsumi, 5,702,856, Cl. 430-96.000.
Ishikawa, Masazumi: *See—*
Yamamoto, Yuji; and Ishikawa, Masazumi, 5,703,701, Cl. 358-487.000.
Ishikawa, Terunobi: *See—*
Nakayama, Akinori; Ishikawa, Terunobi; Takagi, Hiroshi; and Sakabe, Yukio, 5,703,000, Cl. 501-152.000.
Ishikawajima-shibaura Machinery Co., Ltd.: *See—*
Horiuchi, Hiroshi; Momose, Yuichi; and Ushikoshi, Takeshi, 5,701,860, Cl. 123-182.100.
Ishiyama, Sadayuki: *See—*
Sugita, Yukio; Aihara, Kintaro; Ishiyama, Sadayuki; and Yamada, Jun, 5,702,798, Cl. 428-131.000.
Ishizaka, Tetsuo: *See—*
Komiyama, Manabu; Sato, Shunichi; Sonetsuji, Noboru; Ishizaka, Tetsuo; and Yokoi, Saeko, 5,703,893, Cl. 372-43.000.
Ishizaki, Kazuhisa: *See—*
Endo, Takayoshi; Ishizaki, Kazuhisa; Yamada, Satoshi; and Hamaguchi, Takeyuki, 5,702,264, Cl. 439-346.000.
Ishizuka, Hideki: *See—*
Takemoto, Norikazu; Ishizuka, Hideki; Konta, Takeshi; and Takeuchi, Kunihiro, 5,703,412, Cl. 307-10.100.
Isis Pharmaceuticals, Inc.: *See—*
Bennett, C. Frank; and Dean, Nicholas, 5,703,054, Cl. 514-44.000.
Iskikawajima-Harima Heavy Industries Company Limited: *See—*

Strezov, Lazar; Mahapatra, Rama Ballav; Sylva, Fred de; and Mukunthan, Kannappar, 5,701,948, Cl. 164-480.000.
Iskra, Michael J.; and Wislinski, Martin, to McNeil-PPC, Inc. Method of forming a paperboard tampon applicator having an outwardly rolled gripper end. 5,702,553, Cl. 156-203.000.
Isley, Reggald Emory: *See—*
Simmons, Daniel Cecil; Forsyth, Walter James; and Isley, Reggald Emory, 5,702,238, Cl. 417-380.000.
Isobe, Akira, to NEC Corporation. Wafer polishing method and wafer polishing apparatus. 5,702,291, Cl. 451-41.000.
Isogai, Takeyoshi: *See—*
Asai, Koichi; Isogai, Takeyoshi; Mizuno, Manabu; and Adachi, Jun, 5,701,821, Cl. 101-424.000.
Ista, Troy K.: *See—*
Tompkins, Thomas L.; Shirk, Ryan C.; Schroeer, Steven C.; Merry, Richard P.; Ista, Troy K.; and Bloom, Richard L., 5,702,494, Cl. 55-498.000.
Ito, Hideaki; and Tomida, Shigetoshi, to Kabushiki Kaisha Tokai-Rika-Denki-Seisakusho. Shift lever device housing. 5,701,838, Cl. 116-28.100.
Ito, Hideo: *See—*
Yabe, Hisao; Iida, Yoshihiro; Suzuki, Akira; Ito, Hideo; Tashiro, Yoshio; Yamazaki, Minoru; Tamada, Osamu; Nakazawa, Masaaki; and Yamaya, Koji, 5,702,347, Cl. 600-121.000.
Ito, Hirokazu, to Sumitomo Wiring Systems, Ltd. Locking construction of electric connection box. 5,702,021, Cl. 220-326.000.
Ito, Hiromi: *See—*
Fujiwara, Yuichi; Nakagawa, Chikao; Ito, Hiromi; and Kobayashi, Yoshinori, 5,701,816, Cl. 101-128.400.
Ito, Naoyuki: *See—*
Hirota, Hisatoshi; and Ito, Naoyuki, 5,702,235, Cl. 417-222.200.
Ito, Noboru: *See—*
Hayashi, Hideki; Mizuno, Sadao; Ito, Noboru; Urairi, Kenichiro; and Komma, Yoshiaki, 5,703,856, Cl. 369-54.000.
Ito, Sadao, to Aisin Seiki Kabushiki Kaisha. Power reclining device for a seat. 5,702,155, Cl. 297-362.110.
Itoh, Akihiro, to Makita Corporation. Portable rotary saw. 5,701,676, Cl. 30-388.000.
Itoh, Kenji; and Sato, Toru, to Bridgestone Corporation. Pneumatic tires having a tread of an oriented rubber. 5,702,546, Cl. 152-209.00R.
Itoh, Masashi; and Koga, Yasutaka, to Ricoh Company, Ltd. Portable electric apparatus using a pen member for inputting information. 5,703,626, Cl. 345-173.000.
Itoh, Noriie; Kunihara, Mineo; Kushida, Hiroshi; McWhorter, William W.; Nomura, Syunji; Ozawa, Kazunori; Taniguchi, Mikio; and Tsuzuki, Kazuo, to Pharmacia & Upjohn Company. Tropolone derivatives and pharmaceutical composition thereof for preventing and treating ischemic diseases. 5,703,071, Cl. 514-218.000.
Itoh, Ren: *See—*
Sagawa, Akemi; Sakai, Masahiko; Ebata, Michio; and Itoh, Ren, 5,703,145, Cl. 523-161.000.
Itoh, Shigeo: *See—*
Kishino, Takao; Yamaura, Tatsuo; Onodaka, Koji; and Itoh, Shigeo, 5,703,611, Cl. 345-74.000.
Itoh, Yuichi; Kobayashi, Kyoko; Uchiyama, Akira; and Takehara, Toru, to Mitsui Petrochemical Industries, Ltd. Olefin thermoplastic elastomer and laminate thereof. 5,702,827, Cl. 428-519.000.
Itoh, Yukio, to NEC Corporation. Semiconductor device having four power MOSFETs constituting H bridge circuit. 5,703,390, Cl. 257-337.000.
Itou, Takeo; and Matsuda, Hidemi, to Kabushiki Kaisha Toshiba. Display screen and method of manufacturing the same. 5,703,431, Cl. 313-461.000.
ITT Automotive Electrical Systems Inc.: *See—*
McCann, Roy A., 5,703,555, Cl. 335-272.000.
Mueller, Donald L.; and Miciano, Benjamin L., 5,704,038, Cl. 395-185.000.
ITT Automotive Europe GmbH: *See—*
Henein, Nabil, 5,702,736, Cl. 425-556.000.
Weiler, Rolf; and Schiel, Wolfgang, 5,701,978, Cl. 188-73.320.
ITT Corporation: *See—*
Bricaud, Hervé Guy; and Valcher, Fabrice, 5,703,346, Cl. 235-44.100.
Iverson, Paul R.: *See—*
Taylor, Phillip A.; Florczak, Jeffrey M.; Peterson, Mark A.; Iverson, Paul R.; Skorjanec, Joseph; and Lorentz, Robert D., 5,702,876, Cl. 430-496.000.
Ivoclar AG: *See—*
Rheinberger, Volker; Moszner, Norbert; Salz, Ulrich; and Voelkel, Thomas, 5,703,249, Cl. 549-337.000.
Ivy Hill Corporation: *See—*
O'Brien, Patrick J.; Thomas, Alvin; Rufo, George, Jr.; Durham, Larry; and Gelardi, Anthony L., 5,701,997, Cl. 206-308.100.
Iwagami, Tooru: *See—*
Majumdar, Gourab; Iwagami, Tooru; and Noda, Sukehisa, 5,703,399, Cl. 257-723.000.
Iwahashi, Naoto, to Sony Corporation. Method for processing speech signal using sub-converting functions and a weighting function to produce synthesized speech. 5,704,006, Cl. 395-2.680.
Iwai, Ryouji: *See—*
Kimura, Noboru; and Iwai, Ryouji, 5,702,764, Cl. 427-248.100.
Iwakiri, Hiroshi; Fujita, Masayuki; and Hasegawa, Takashi, to Kanegafuchi Kagaku Kogyo Kabushiki Kaisha. Curable composition containing an oxypropylene polymer and calcium carbonate which has been surface treated with a fatty acid. 5,703,146, Cl. 523-200.000.
Iwama, Chikara: *See—*
Katohno, Noboru; Tsurumi, Yoshihisa; and Iwama, Chikara, 5,703,737, Cl. 360-109.000.
Iwamida, Hitoshi, to Fujitsu Limited. Speech recognition apparatus and word dictionary therefor. 5,704,005, Cl. 395-2.630.
Iwanski, George J.: *See—*
Kilpela, Thomas S.; Iwanski, George J.; Songer, Matthew N.; and Songer, Robert J., 5,702,399, Cl. 606-72.000.
Iwasa, Kiyoaki; and Ohshima, Shigeo, to Kabushiki Kaisha Toshiba. Semiconductor integrated circuit. 5,703,381, Cl. 257-48.000.
Iwasaki, Eiji: *See—*
Hashiuchi, Fumio; Hirai, Yushirou; and Iwasaki, Eiji, 5,702,758, Cl. 427-133.000.
Iwasaki, Hitoshi; Ohsawa, Yuichi; Kondoh, Reiko; Hashimoto, Susumu; Sawabe, Atsuhito; Kamiguchi, Yuzo; and Sahashi, Masashi, to Kabushiki Kaisha Toshiba. Magnetoresistance effect element. 5,702,832, Cl. 428-611.000.
Iwasaki, Jun, to Sony Corporation. Frequency modulated signal demodulator circuit and communication terminal equipment. 5,703,527, Cl. 329-336.000.
Iwasaki, Tameo; Kondo, Kazuhiko; and Ohmizu, Hiroshi, to Tanabe Seiyaku Co., Ltd. Heterocyclic alkanamide. 5,703,234, Cl. 544-50.000.
Iwasawa, Naozumi: *See—*
Imai, Genji; Iwasawa, Naozumi; and Yamaoka, Tsuguo, 5,702,872, Cl. 430-326.000.
Iwata, Hiromitsu; Nakatsuka, Takashi; Tanaka, Rie; and Ishiguro, Masaji, to Suntory Limited. Penem compounds. 5,703,068, Cl. 514-195.000.
Iyer, Venkatramani S.: *See—*
Gupta, Amitava; Blum, Ronald D.; Iyer, Venkatramani S.; and Nagg, Paul J., 5,702,819, Cl. 428-412.000.
Izawa, Yosuke; Tani, Masahiro; Okumura, Maoji; Nio, Yutaka; and Sato, Toshichika, to Matsushita Electric Industrial Co., Ltd. Video signal compression apparatus for horizontal compression of a video signal. 5,703,653, Cl. 348-445.000.
Izumi, Jun; Yasutake, Akinori; Tsutaya, Hiroyuki; Harada, Takayuki; and Hamada, Kenichi, to Mitsubishi Jukogyo Kabushiki Kaisha. Method for collecting volatile organic substances. 5,702,505, Cl. 95-115.000.
Izumi, Michihiro: *See—*
Tsuchida, Shinji; Takashima, Shoichi; and Izumi, Michihiro, 5,703,936, Cl. 379-88.000.
Izumi, Shigeichi, to Fujitsu Limited. Optical part module reduced in size and printed board package having such an optical part module. 5,703,991, Cl. 385-135.000.
J. Eberspächer GmbH & Co.: *See—*
Humburg, Michael, 5,702,055, Cl. 237-214.000.
J.M. Voith GmbH: *See—*
Kustermann, Martin, 5,702,760, Cl. 427-172.000.
J. R. Simplot Co.: *See—*
Orr, Michael L., 5,702,768, Cl. 427-421.000.
Jablonka, Bernd: *See—*
Klingler, Otmar; Zoller, Gerhard; Jablonka, Bernd; Just, Melitta; Breipohl, Gerhard; Knolle, Jochen; König, Wolfgang; and Stilz, Hans Ulrich, 5,703,050, Cl. 514-18.000.
Jablonski, Paul L.; and Rodriguez, Charles, to Specialty Group Industries, Inc. Animal litter box. 5,701,845, Cl. 119-166.000.
Jachimowicz, Karen E.; Kelly, George R.; and Lebby, Michael S., to Motorola, Inc. Integrated electro-optic package for reflective spatial light modulators. 5,703,664, Cl. 349-58.000.
Jachimowicz, Karen E.: *See—*
Norman, Michael P.; and Jachimowicz, Karen E., 5,702,305, Cl. 463-42.000.
Jackowski, George: *See—*
Takahashi, Miyoko; and Jackowski, George, 5,702,905, Cl. 435-7.100.
Jackson, Kenneth S.; Persons, Charles D.; Krebs, Robert D.; Price, Gregory G.; and Bales, Joel P., to Zimmer, Inc. Orthopaedic retainer attachable to an elongate member. 5,702,388, Cl. 606-54.000.
Jacob, Savarimuthu M.: *See—*
Knipe, Richard E., Jr.; Jacob, Savarimuthu M.; and Mancini, Thomas, 5,701,922, Cl. 134-100.100.
Jacobi, Michael Joseph: *See—*
Raissyan, Anousheh; Wood, Kody Raymond; Jacobi, Michael Joseph; King, Linda S.; Seydel, Lee Chopek; Torbert, Michele Pauline; and Leonard, Robert Gary, 5,703,935, Cl. 379-88.000.
Jacobs, Joe: *See—*
Boggs, Andrew Keith; Hoang, Quy N.; Jacobs, Joe; Mullen, John Mark; Purrington, Challis; and Weaver, Laura A., 5,703,872, Cl. 370-252.000.
Jacobs, Richard L. Interpenetrating network compositions and structures. 5,702,991, Cl. 442-72.000.
Jacobs, William R., Jr.: *See—*
Sacchettini, James; Blanchard, John; and Jacobs, William R., Jr., 5,702,935, Cl. 435-193.000.
Jacobsen, Jack Steven: *See—*
Vitek, Michael Peter; and Jacobsen, Jack Steven, 5,703,209, Cl. 530-350.000.
Jacobsen, Stephen C.; and Davis, Clark C., to Sarcos, Inc. Magnetic eccentric motion motor. 5,703,422, Cl. 310-82.000.
Jacobson, Irina Cipora: *See—*
Xue, Chu-Biao; DeGrado, William F.; DeCicco, Carl Peter; and Jacobson, Irina Cipora, 5,703,092, Cl. 514-303.000.
Jacobsson, Magnus: *See—*

Albrektsson, Björn; Carlsson, Lars; Jacobsson, Magnus; Röstlund, Tord; and Wennberg, Stig, 5,702,473, Cl. 623-22.000.
Jacquet, René: *See*—
Lefebvre, Bruno; Jacquet, René; and Quentric, Jean-François, 5,703,551, Cl. 335-126.000.
Jahnke, Wolfgang, to Simonswerk GmbH. Adjustable door hinge. 5,701,636, Cl. 16-238.000.
Jairazbhoy, Vivek A.: *See*—
Karur, Chandresekar R.; Vanden Berg, Ted A.; Jairazbhoy, Vivek A.; and Hitchen, Christopher, 5,703,290, Cl. 73-430.000.
James, David C., to James Group, The. Method for data compression. 5,703,907, Cl. 375-240.000.
James Group, The: *See*—
James, David C., 5,703,907, Cl. 375-240.000.
Jam'n Fitness Corp.: *See*—
Koenig, Larry, 5,702,329, Cl. 482-97.000.
Jamois, Didier: *See*—
Jolivet, Yannick; Malot, Michel; and Jamois, Didier, 5,703,148, Cl. 524-62.000.
Jang, Dug Gyu, to Goldstar Co., Ltd. Braun tube for a projection television receiver. 5,702,016, Cl. 220-2.30A.
Jang, Hyun-Soon: *See*—
Park, Charoo; Jang, Hyun-Soon; Kim, Chull-Soo; Kim, Myung-Ho; Lee, Seung-Hun; Lee, Si-Yeol; Lee, Ho-Cheol; Kim, Tae-Jin; and Choi, Yun-Ho, 5,703,828, Cl. 365-230.030.
Jang, Sylin-Ming: *See*—
Yu, Chen-Hua Douglas; and Jang, Sylin-Ming, 5,702,980, Cl. 437-187.000.
Jang, Syun-Ming; Chen, Ying-Ho; and Yu, Chen-Hua, to Taiwan Semiconductor Manufacturing Company, Ltd. Shallow trench isolation method employing self-aligned and planarized trench fill dielectric layer. 5,702,977, Cl. 437-67.000.
Janoff, Andrew S.: *See*—
Mayhew, Eric; Ali, Shaukat; and Janoff, Andrew S., 5,703,117, Cl. 514-449.000.
Janssen Pharmaceutica, N.V.: *See*—
Van Lommen, Guy Rosalia Eugéne; De Bruyn, Marcel Frans Leopold; and Janssens, Walter Jacobus Joseph, 5,703,115, Cl. 514-456.000.
Janssens, Walter Jacobus Joseph: *See*—
Van Lommen, Guy Rosalia Eugéne; De Bruyn, Marcel Frans Leopold; and Janssens, Walter Jacobus Joseph, 5,703,115, Cl. 514-456.000.
Jantunen, Heikki, to Tamrock Oy. Arrangement for controlling the feed mechanism of a rock drill. 5,701,962, Cl. 175-24.000.
Japan Servo Co., Ltd.: *See*—
Sasaki, Naotaka; Sugaya, Kenju; and Nakahashi, Fumio, 5,703,635, Cl. 347-176.000.
Japan Steel Works, Ltd., The: *See*—
Yamada, Yosuke; Sano, Shigeaki; Yoshida, Toshiji; and Kagitani, Toshio, 5,702,664, Cl. 264-515.000.
Japat Ltd.: *See*—
Früh, Thomas; Pitterna, Thomas; Murata, Toshiki; Svensson, Lene D.; Yuumoto, Yoko; and Sakaki, Junichi, 5,703,106, Cl. 514-378.000.
Jaroszeski, Mark J.: *See*—
Hofmann, Gunter A.; Gilbert, Richard A.; Hayakawa, Yasuhiko; Heller, Richard; and Jaroszeski, Mark J., 5,702,359, Cl. 604-20.000.
Jarrold, Gregory S.; Chatterjee, Dilip K.; and Ghosh, Syamal K., to Eastman Kodak Company. Process of forming a ceramic article containing a core comprising zirconia and a shell comprising zirconium boride. 5,702,766, Cl. 427-376.100.
Jarvinen, Gordon D.: *See*—
Smith, Paul H.; Brainard, James R.; Jarvinen, Gordon D.; and Ryan, Robert R., 5,702,683, Cl. 424-9.361.
Jasper, Norman H., to United States of America, Navy. Pressure minesweeping vehicle. 5,701,839, Cl. 114-264.000.
Javery, Robert P.; Lau, Daniel T.; Wright, James B.; and Poleschuk, Leroy A., to United Technologies Automotive Systems, Inc. Method for making a multi-function switch stalk assembly. 5,701,660, Cl. 29-622.000.
Jayasuriya, Hiranthi; Lingham, Russell B.; Pelaez, Fernando; Sanchez, Manuel; Silverman, Keith C.; Singh, Sheo Bux; and Zink, Deborah L., to Merck & Co., Inc. Inhibitors of farnesyl-protein transferase. 5,703,067, Cl. 514-179.000.
Jean, Amigo. Heat dissipation device for an integrated circuit. 5,701,951, Cl. 165-121.000.
Jeffrey, Mark Timothy: *See*—
Proctor, Richard John; Jeffrey, Mark Timothy; and Maddern, Thomas Slade, 5,703,879, Cl. 370-398.000.
Jeng, Nanseng: *See*—
Mathews, Viju K.; Fazan, Pierre C.; and Jeng, Nanseng, 5,702,986, Cl. 438-163.000.
Jenkins, Stuart E.: *See*—
Schmidt, Karl M.; Jenkins, Stuart E.; and Edwards, Harry W., 5,701,687, Cl. 36-29.000.
Jensen, Donald A.: *See*—
Groves, Oliver J.; Jensen, Donald A.; Nelson, Thomas S.; and Thomas, Joel M., 5,701,651, Cl. 29-281.500.
Jensen, John V., to LSI Logic Corporation. Multi-level resolution lithography. 5,703,376, Cl. 250-492.220.
Jensen, Lars D.: *See*—
Brown, Kyle; Van Noy, Stephen J.; Woo, Yi-Ren; and Jensen, Lars D., 5,702,400, Cl. 606-107.000.
Jeong, Bong-kwon, to Samsung Display Devices Co., Ltd. Screen structure of a cathode-ray tube. 5,703,432, Cl. 313-461.000.
Jeong, Bong-uk: *See*—
Kim, Chang-seob; Son, Seok-bong, Kim, Sang-kyun; and Jeong, Bong-uk, 5,703,429, Cl. 313-346.00R.
Jester, Randy Douglas; Penoyer, John Arthur; Roth, Douglas Duane; Frank, Detlef; Onodera, Minoru; Tsudaka, Takeichi; Sato, Toshiaki; and Moritani, Tohei, to Hoechst Celanese Corp; and Kuraray Co. Ltd. Process for treating liquid crystal polymer film. 5,703,202, Cl. 528-481.000.
Jet Inc.: *See*—
MacLaren, David S., 5,702,079, Cl. 248-127.000.
Jewett, Don Lee: *See*—
Amir, Avner; Fletcher, Daniel John; and Jewett, Don Lee, 5,701,909, Cl. 128-731.000.
Jezek, Robert J., Sr.: *See*—
Huber, Michael T.; Cabell, David W.; Jezek, Robert J., Sr.; and Goulait, David J. K., 5,702,551, Cl. 156-73.100.
JH Corporation: *See*—
Kubota, Ken, 5,702,540, Cl. 148-223.000.
Jiang, Qingping: *See*—
Law, Say-Jong; Jiang, Qingping; Fischer, Walter; Unger, John T.; and Krodel, Elizabeth K., 5,702,887, Cl. 435-6.000.
Jimenez, Antonio M.: *See*—
Berger, Paul D.; and Jimenez, Antonio M., 5,703,015, Cl. 504-206.000.
Jin, Peiwen, to Tarkett AG. UV curable coatings. 5,703,141, Cl. 522-97.000.
Jinbo, Hiroki: *See*—
Hiraiwa, Hiroyuki; Nakagawa, Kazuhiro; Jinbo, Hiroki; Takano, Jun; and Fujiwara, Seishi, 5,702,495, Cl. 65-17.100.
Komine, Norio; Jinbo, Hiroki; Fujiwara, Seishi; and Hiraiwa, Hiroyuki, 5,703,712, Cl. 359-350.000.
Jinda, Akihito, to Sharp Kabushiki Kaisha. Circuit substrate including anodization control means. 5,703,744, Cl. 361-59.000.
Jinno, Satoshi: *See*—
Iida, Tetsuya; Jinno, Satoshi; and Higuchi, Takanobu, 5,702,792, Cl. 428-64.100.
Jiraki, Kalil M. Medical glove for facilitating endotracheal intubation and method of using same. 5,701,918, Cl. 128-897.000.
JJI Lighting Group, Inc.: *See*—
Engle, Joseph D., 5,702,176, Cl. 362-219.000.
Jo, Sung-O: *See*—
Shin, Hyun-Doo; Jo, Sung-O; and Nahm, Eon-Ju, 5,701,624, Cl. 8-159.000.
Jogwich, Martin: *See*—
Carlhoff, Christoph; Jogwich, Martin; Lorenzen, Claus-Jürgen; and Nahmias, Marco, 5,702,550, Cl. 156-64.000.
Johannsen, Olaf. Cable lead-in. 5,703,328, Cl. 174-65.00R.
John O. Butler Company: *See*—
Maekawa, Kiyoshi; and Calhoon, Christina M., 5,702,686, Cl. 424-49.000.
John, Trahan D.: *See*—
Larson, Carl O., Jr.; Smith, James S.; Chapman, John H.; Slimon, Scot A.; John, Trahan D.; Robert, J. Brozek; Franco, Alberto; McGarvey, John J.; Rosen, Marvin E.; and Pasque, Michael K., 5,702,430, Cl. 607-1.000.
Johns, Eric Mitchell: *See*—
Collier, Leslie Warren, IV; Yahiaoui, Ali; Johns, Eric Mitchell; and Durrance, Debra Hartley, 5,702,377, Cl. 604-361.000.
Johns Hopkins University, The: *See*—
Vogelstein, Bert; Kinzler, Kenneth W.; and Hamilton, Stanley, 5,702,886, Cl. 435-6.000.
Johns Hopkins Unviersity, The: *See*—
Kinzler, Kenneth W.; and Vogelstein, Bert, 5,702,903, Cl. 435-6.000.
Johnson & Johnson Clinical Diagnostics, Inc.: *See*—
Ekeze, Tobias E.; and Kerschner, JoAnne Hansen, 5,702,884, Cl. 435-5.000.
Johnson & Johnson Professional, Inc.: *See*—
Gabriel, Stefan M.; and Sheehan, David G., 5,702,467, Cl. 623-20.000.
Johnson & Johnson Vision Products, Inc.: *See*—
Martin, Wallace Anthony; van der Meulen, Wybren; Menezes, Edgar V.; Renkema, Kornelis; Phillips, Robert B.; Last, Victor; Wu, Jongliang; and Eshuis, Gerbrand, 5,702,735, Cl. 425-548.000.
Johnson, Bruce Graham: *See*—
Bushko, Dariusz Antoni; Avakian, Kevin Michael; Johnson, Bruce Graham; and Gerver, Michael Jonathan, 5,703,553, Cl. 335-215.000.
Johnson, Chris E.: *See*—
Lackey, Jennifer J.; Pothier, Albert J.; Carls, Thomas A.; Johnson, Chris E.; and Elliott, Scott, 5,702,464, Cl. 623-20.000.
Johnson, Claire K.: *See*—
Boyle, Ross W.; Dolphin, David; and Johnson, Claire K., 5,703,230, Cl. 540-145.000.
Johnson, Gary Carl: *See*—
Anderson, Michael John; Johnson, Gary Carl; Popovich, Mark Phillip; and Christensen, Jeffrey Eames, 5,702,775, Cl. 428-1.000.
Johnson, Gilbert C.; Radcliffe, Marc D.; Savu, Patricia M.; Snustad, Daniel C.; and Spawn, Terence D., to Minnesota Mining and Manufacturing Company. Liquid crystal compounds having a chiral fluorinated terminal portion. 5,702,637, Cl. 252-299.610.
Johnson, Hugh Griffith, to Fisher & Paykel Limited. Lint collector for clothes drier. 5,701,684, Cl. 34-595.000.
Johnson, James W.; and Hillard, Donald H., to Hubbell Incorporated. Wire rope trolley. 5,701,824, Cl. 104-112.000.

Johnson, Lonnie G.; and Applewhite, John, to Johnson Research & Development Company, Inc. Compressed air gun with single action pump. 5,701,879, Cl. 124-69.000.
Johnson Matthey Public Limited Company: *See*—
Frost, Jonathan C.; Gascoyne, John M.; Hards, Graham A.; Wilkinson, David P.; and Prater, Keith B., 5,702,839, Cl. 429-42.000.
Miller, Joseph; Pearson, Derek P. A.; and Pitcher, Philip G., 5,702,830, Cl. 428-611.000.
Johnson, Nick M.: *See*—
Ghaffaripour, Parviz; Kalb, Arthur J.; Johnson, Nick M.; and Ting, Sai L., 5,703,529, Cl. 330-51.000.
Johnson, Ralph J.: *See*—
Sidwell, Steven C.; English, George J.; Garrison, Robert L.; and Johnson, Ralph J., 5,702,179, Cl. 362-255.000.
Johnson Research & Development Company, Inc.: *See*—
Johnson, Lonnie G.; and Applewhite, John, 5,701,879, Cl. 124-69.000.
Johnson, Robert H., to Abbott Laboratories. Male luer connector assembly. 5,702,374, Cl. 604-283.000.
Johnson, Ronald E.: *See*—
Bocko, Peter L.; Eid, Bernard A.; Johnson, Ronald E.; Lock, William E.; Shoup, Robert D.; and Themont, Jean-Pierre, 5,701,815, Cl. 101-211.000.
Johnson, Scott: *See*—
Roemer, David J.; and Johnson, Scott, 5,702,211, Cl. 408-56.000.
Johnson, Todd W.; and Fabio, David G. Self-sealing liquid filter. 5,702,603, Cl. 210-493.100.
Johnson, William E.: *See*—
Giesler, Richard; Geissler, Ulrich C.; Stanford, Margaret E.; and Johnson, William E., 5,702,383, Cl. 604-409.000.
Johnston, Stephen A.; Barry, Michael A.; and Lai, Wayne C., to Board of Regents The University of Texas System. Expression library immunization. 5,703,057, Cl. 514-44.000.
Jolivet, Yannick; Malot, Michel; and Jamois, Didier, to Total Raffinage Distribution S.A. Asphalt-polymer compositions, process for making same and uses thereof. 5,703,148, Cl. 524-62.000.
Jolliff, Norman E.: *See*—
Eberle, Frederick P.; and Jolliff, Norman E., 5,701,738, Cl. 60-435.000.
Jones, Dennis Boyd, to Molex Incorporated. Electrical connector latching system. 5,702,266, Cl. 439-357.000.
Jones, Gary V.: *See*—
Sipos, Stefan; and Jones, Gary V., 5,702,747, Cl. 426-422.000.
Jones, Michael: *See*—
Adam, Dan R.; Kempner, Kenneth M.; Vivino, Mark A.; Tucker, Eben E.; and Jones, Michael, 5,701,898, Cl. 128-661.090.
Jones, Thomas Mark: *See*—
Wieczorek, Alfred B.; Jones, Thomas Mark; and Sprenger, Michael Kent, 5,703,479, Cl. 324-73.100.
Jones, Wayne H., to Spangler Candy Company. Container and lollipop combination. 5,702,742, Cl. 426-115.000.
Jonischus, Jürgen, to Firma Fedag. Vacuum cleaning device with a suction nozzle. 5,701,633, Cl. 15-387.000.
Jordan, Kurt: *See*—
Kreysler, William; Labesque, Serge; Jordan, Kurt; Luzaich, Mark; Colombo, David; Marcus, Edward J.; and Koosa, Richard, 5,701,706, Cl. 52-169.600.
Jørgensen, Birgitte Bojer: *See*—
Hastrup, Sven; Branner, Sven; Jørgensen, Birthe Ravn; Christensen, Tove; Jørgensen, Birgitte Bojer; Shuster, Jeffrey R.; Madden, Mark; Moyer, Donna L.; and Fuglsang, Claus, 5,702,934, Cl. 435-183.000.
Jørgensen, Birthe Ravn: *See*—
Hastrup, Sven; Branner, Sven; Jørgensen, Birthe Ravn; Christensen, Tove; Jørgensen, Birgitte Bojer; Shuster, Jeffrey R.; Madden, Mark; Moyer, Donna L.; and Fuglsang, Claus, 5,702,934, Cl. 435-183.000.
Jorgensen, Robert W., to Hubbell Incorporated. Electrical boxes. 5,703,327, Cl. 174-53.000.
Josephs, Harold. Safety guard for pedestrian-operated machines having rotatable blades. 5,703,450, Cl. 318-379.000.
Jost, Mark; and Dennison, Charles, to Micron Technology, Inc. Method of forming a bit line over capacitor array of memory cells and an array of bit line over capacitor array of memory cells. 5,702,990, Cl. 438-618.000.
Jostein, Erstad, to Framo Engineering AS. Fluid flow connector. 5,702,130, Cl. 285-96.000.
Joulia, Gérard, to L'Oreal. Make-up product. 5,702,713, Cl. 424-401.000.
Jovanovich, Alan F.; Warren, Bruce G.; Charron, Duane G.; and Duke, Steven B., to Intermec Corporation. Method and apparatus for controlling country specific frequency allocation. 5,703,950, Cl. 380-23.000.
Ju, Kochan: *See*—
Guo, Yimin; Ju, Kochan; and Hsu, Yimin, 5,703,485, Cl. 324-235.000.
Ju, Paul P.: *See*—
Chu, John B.; Ju, Paul P.; and Wang, Ynjiun P., 5,702,059, Cl. 235-462.000.
Judd, Kit. Ignition assembly adapter system. 5,701,875, Cl. 123-595.000.
Judge, Thomas M.: *See*—
Gammill, Ronald B.; Judge, Thomas M.; and Morris, Joel, 5,703,075, Cl. 514-233.500.
Judkins, Justin Boyd: *See*—
DiGiovanni, David John; Judkins, Justin Boyd; Pedrazzani, Janet Renee; Vengsarkar, Ashish Madhukar; and Walker, Kenneth Lee, 5,703,978, Cl. 385-37.000.
Jung, Hee Young; Lee, Bhum Cheol; and Park, Kwon Chul, to Electronics and Telecommunications Research Institute; and Korea Telecommunication Authority. Cyclic line coding apparatus for error detection and frame recovery. 5,703,882, Cl. 370-474.000.
Junge, Klaus, to AE Goetze GmbH. Multipart piston for an internal combustion engine. 5,701,802, Cl. 92-190.000.
Junge, Michael; and Reiffenrath, Volker, to Merck Patent Gesellschaft Mit Beschrankter Haftung. High-multiplexed supertwist liquid-crystal display. 5,702,640, Cl. 252-299.010.
Junghans, Klaus, to Schering Aktiengesellschaft. Process for the production of sulfuric acid semi-esters. 5,703,261, Cl. 558-38.000.
Junghans, Rudi: *See*—
Thünker, Norbert; and Junghans, Rudi, 5,701,817, Cl. 101-350.000.
Junior Products Inc.: *See*—
Olaiz, James, 5,702,039, Cl. 224-409.000.
Juple, Pierre; and Haesler, Heinz, to Geberit Technik AG. Roof water inlet. 5,702,596, Cl. 210-166.000.
Just, Melitta: *See*—
Klingler, Otmar; Zoller, Gerhard; Jablonka, Bernd; Just, Melitta; Breipohl, Gerhard; Knolle, Jochen; König, Wolfgang; and Stilz, Hans Ulrich, 5,703,050, Cl. 514-18.000.
K.E.R. Associates, Inc.: *See*—
Ridenour, Ken W., 5,702,718, Cl. 424-438.000.
K.O. Technology, Inc.: *See*—
Housman, David E., 5,702,890, Cl. 435-6.000.
Kabi Pharmacia Ophthalmics, Inc.: *See*—
Zhou, Stephen Q., 5,702,441, Cl. 623-6.000.
Kabushiki Kaisha Ace Denken: *See*—
Takemoto, Takatoshi; and Tsurumi, Masayuki, 5,702,303, Cl. 463-27.000.
Kabushiki Kaisha Fuji Ceramics: *See*—
Ishida, Narao; Saijyo, Yoshio; Arakawa, Shingo; Watanabe, Kimiaki; and Inaba, Hidehiro, 5,703,295, Cl. 73-593.000.
Kabushiki Kaisha Kanpuri: *See*—
Hattori, Katsuyoshi, 5,702,219, Cl. 412-6.000.
Kabushiki Kaisha Kenwood: *See*—
Sakamoto, Yoshio, 5,701,657, Cl. 29-594.000.
Kabushiki Kaisha Ohara: *See*—
Fu, Jie, 5,702,995, Cl. 501-10.000.
Kabushiki Kaisha TEC: *See*—
Suzuki, Masashi; and Sugiyama, Makoto, 5,703,348, Cl. 235-472.000.
Kabushiki Kaisha Tokai-Rika-Denki-Seisakusho: *See*—
Ito, Hideaki; and Tomida, Shigetoshi, 5,701,838, Cl. 116-28.100.
Kabushiki Kaisha Topcon: *See*—
Ohtomo, Fumio; Hayashi, Kunihiro; Kodaira, Jun-ichi; Nishizawa, Hiroyuki; and Yoshino, Kenichiro, 5,703,718, Cl. 359-494.000.
Kabushiki Kaisha Toshiba: *See*—
Fujita, Hidehiro; and Tachizaki, Hisashi, 5,703,921, Cl. 378-4.000.
Gunji, Shizuka, 5,704,040, Cl. 395-188.010.
Hayase, Shuzi; Nakano, Yoshihiko; and Kani, Rikako, 5,702,776, Cl. 428-1.000.
Hori, Masahiko, 5,703,407, Cl. 257-783.000.
Imanari, Hiroyuki; and Otobe, Hiroshi, 5,701,774, Cl. 72-8.600.
Itou, Takeo; and Matsuda, Hidemi, 5,703,431, Cl. 313-461.000.
Iwasa, Kiyoaki; and Ohshima, Shigeo, 5,703,381, Cl. 257-48.000.
Iwasaki, Hitoshi; Ohsawa, Yuichi; Kondoh, Reiko; Hashimoto, Susumu; Sawabe, Atsuhito; Kamiguchi, Yuzo; and Sahashi, Masashi, 5,702,832, Cl. 428-611.000.
Kaji, Naruhiko; Nakano, Yutaka; Nakata, Rempei; Harada, Minoru; Shinjo, Ryoichi; and Tsujimura, Manabu, 5,702,673, Cl. 422-186.070.
Kitamura, Tetsuya; and Mimura, Hideki, 5,703,997, Cl. 386-97.000.
Kusano, Takahiro, 5,703,523, Cl. 327-553.000.
Mikata, Yuuichi; Ishihara, Katsunori; and Okumura, Katsuya, 5,702,529, Cl. 118-722.000.
Mikata, Yuuichi, 5,702,531, Cl. 118-697.000.
Mitsui, Tadashi; and Hieda, Katsuhiko, 5,702,567, Cl. 156-644.100.
Nakayama, Kazuya, 5,703,383, Cl. 257-139.000.
Noda, Junichiro; and Tohyama, Daisuke, 5,702,966, Cl. 437-43.000.
Sano, Akihiro, 5,701,897, Cl. 128-661.090.
Senda, Shinya; and Haraguchi, Hiroshi, 5,703,685, Cl. 356-401.000.
Shimoda, Kenji; and Takeda, Hitoshi, 5,703,889, Cl. 371-55.000.
Shiratake, Shinichiro; Takashima, Daisaburo; Tsuchida, Kenji; and Inaba, Tsuneo, 5,703,817, Cl. 365-200.000.
Kabushiki Kaisha Toyoda Jiboshokki Seisakusho: *See*—
Ikeda, Hayato, 5,702,236, Cl. 417-269.000.
Kabushiki Kaisha Toyoda Jidoshokki Seisakusho: *See*—
Minoshima, Norimoto; and Odachi, Yasuharu, 5,703,461, Cl. 320-2.000.
Odachi, Yasuharu; and Tanaka, Katsufumi, 5,703,298, Cl. 73-862.333.
Kabushiki Kaisha Toyota Chuo Kenkyusho: *See*—
Imaeda, Takao; and Hirai, Masana, 5,702,883, Cl. 435-4.000.
Kachmarik, David J.; Soules, Thomas F.; Fillion, Raymond A.; Steinbrenner, Erwin G.; and Kuk, Donald W., to General Electric Company. Compact fluorescent lamp and ballast arrangement with inductor directly between lamp ends. 5,703,440, Cl. 315-56.000.
Kadlecek, Ann: *See*—
Beavo, Joseph A.; Corbin, Jackie D.; Ferguson, Kenneth M.; Francis, Sharron H.; Kadlecek, Ann; Loughney, Kate; McAllister-Lucas, Linda M.; Sonnenburg, William K.; and Thomas, Melissa K., 5,702,936, Cl. 435-196.000.
Kadlic, Thomas P.: *See*—

Malek, Mehrdad M.; Kadlic, Thomas P.; and Borsenik, Frank D., 5,702,104, Cl. 273-292.000.
Kadotani, Kanichi: *See—*
Imamura, Toshihide; Kadotani, Kanichi; Hayakashi, Bunji; Imaizumi, Hisaakira; Shakushi, Tetsuo; Matsumoto, Toshihiko; and Watanabe, Genichiro, 5,701,950, Cl. 165-222.000.
Kadowaki, Toshihiro: *See—*
Sakai, Masanori; Kadowaki, Toshihiro; Arakawa, Naoto; and Ohnishi, Tetsuya, 5,703,696, Cl. 358-404.000.
Kaegi, Werner; Stibal, Werner; Schaech, Gunther; Straub, Rainer; and Schmidt, Gerhard, to EMS-Inventa AG. Method for producing self-crimping polymer bi-component fibers. 5,701,644, Cl. 28-220.000.
Kageyama, Hidehei; Ueki, Tomiji; and Mitsuya, Yoshihide, to Kotobuki & Co.,Ltd. Side knock type mechanical pencil. 5,702,193, Cl. 401-65.000.
Kagitani, Toshio: *See—*
Yamada, Yosuke; Sano, Shigeaki; Yoshida, Toshiji; and Kagitani, Toshio, 5,702,664, Cl. 264-515.000.
Kahn, Andrew P.: *See—*
Gaffney, Anne M.; Kahn, Andrew P.; and Pitchai, Rangasamy, 5,703,254, Cl. 549-536.000.
Kaifu, Noriyuki: *See—*
Saika, Toshihiro; Mizutani, Hidemasa; Kaifu, Noriyuki; and Kameshima, Toshio, 5,703,666, Cl. 349-61.000.
Kaiser Aluminum & Chemical Corporation: *See—*
Kush, Donald C., 5,702,537, Cl. 134-15.000.
Kaiser, Helmut: *See—*
Schulmann, Winfried; Thimm, Franz; and Kaiser, Helmut, 5,702,523, Cl. 117-208.000.
Kaiser, Mark A., to Marshall Industries Composites, Inc. Reinforcing structural rebar and method of making the same. 5,702,816, Cl. 428-375.000.
Kaiser, Paul. Overlay for cap bill or visor. 5,701,607, Cl. 2-209.130.
Kaji, Kunihide, to Olympus Optical Co., Ltd. Ligating apparatus. 5,702,407, Cl. 606-139.000.
Kaji, Naruhiko; Nakano, Yutaka; Nakata, Rempei; Harada, Minoru; Shinjo, Ryoichi; and Tsujimura, Manabu, to Ebara Corporation; and Kabushiki Kaisha Toshiba. Ozone generating apparatus. 5,702,673, Cl. 422-186.070.
Kajiwara, Edward Makoto: *See—*
Nicholson, Myron Donald; Kajiwara, Edward Makoto; and DuCharme, Paul Edmund, Jr., 5,702,783, Cl. 428-34.800.
Kakizaki, Masaaki; Hirano, Hirofumi; and Bekki, Toshihiko, to Canon Kabushiki Kaisha. Sheet feeding force control in a multiple input path sheet feeding apparatus. 5,702,191, Cl. 400-582.000.
Kaku, Junichi; and Yamada, Masaichi, to Sanshin Kogyo Kabushiki Kaisha. Vertical engine. 5,701,872, Cl. 123-495.000.
Kaku, Nobuyuki; Ono, Seiji; Maehara, Yoshimi; and Inoue, Mikihisa, to Hitachi Maxell, Ltd; and Hitachi, Ltd. Tape cassette. 5,702,062, Cl. 242-338.400.
Kaku, Toshimitsu: *See—*
Kirino, Fumiyoshi; Toda, Tsuyoshi; Ide, Horishi; Sugiyama, Hisataka; Saito, Atsushi; Tsuchinaga, Hiroyuki; Maeda, Takeshi; Kugiya, Fumio; Kaku, Toshimitsu; Mita, Seiichi; Shigematsu, Kazuo; and Ouchi, Yasuhide, 5,703,855, Cl. 369-54.000.
Kakuta, Tatsuya: *See—*
Oishi, Kazumasa; Akasaka, Nobuhiro; Kakuta, Tatsuya; and Matsuda, Yasuo, 5,703,988, Cl. 385-128.000.
Kalamazoo Holdings, Inc.: *See—*
Guzinski, James A.; and Schulze, Mark H., 5,702,737, Cl. 426-33.000.
Kalapudas, Arja Marketta: *See—*
Karjalainen, Arto Johannes; Södervall, Maria-Liisa; Kalapudas, Arja Marketta; Pelkonen, Reino Olavi; Laine, Aire Maria; Lammintausta, Risto Arvo Sakari; and Salonen, Jarmo Sakari, 5,703,109, Cl. 514-383.000.
Kalb, Arthur J.: *See—*
Ghaffaripour, Parviz; Kalb, Arthur J.; Johnson, Nick M.; and Ting, Sai L., 5,703,529, Cl. 330-51.000.
Kalker, William J., Jr.: *See—*
Masters, William Cecil; and Kalker, William J., Jr., 5,701,715, Cl. 52-698.000.
Kallman, Kurt Albert: *See—*
Blanchard, Scott David; Kallman, Kurt Albert; and Bucher, William Alexander, 5,703,903, Cl. 375-232.000.
Kalter, Howard Leo: *See—*
Bertin, Claude Louis; Howell, Wayne John; Hedberg, Erik Leigh; Kalter, Howard Leo; and Kelley, Gordon Arthur, Jr., 5,702,984, Cl. 437-208.000.
Kalthoff, Timothy V.; Wang, Binan; and Wu, Miaochen, to Burr-Brown Corporation. Switched capacitor input sampling circuit and method for delta sigma modulator. 5,703,589, Cl. 341-172.000.
Kamada, Masashi: *See—*
Akiyama, Yuji; Morimura, Kazuhiko; Matsumoto, Masashi; Sugama, Sadayuki; Kamada, Masashi; and Ninomiya, Takayuki, 5,704,019, Cl. 395-101.000.
Kamasz, Stacy R.: *See—*
Farrier, Michael G.; Kamasz, Stacy R.; Ma, Fred S. F.; and Bendett, Mark P., 5,703,639, Cl. 348-241.000.
Kamata, Shigeto; and Sakai, Toshikazu, to Canon Kabushiki Kaisha. Moving magnet type multi-phase linear motor with vibration suppression and coil cooling means. 5,703,420, Cl. 310-54.000.
Kamen, Dean L.; Ambrogi, Robert R.; Duggan, Robert J.; Heinzmann, Richard Kurt; Key, Brian R.; Skoskiewicz, Andrzej; and Kristal, Phyllis K., to Deka Products Limited Partnership. Human transporter. 5,701,965, Cl. 180-7.100.
Kameshima, Toshio: *See—*
Saika, Toshihiro; Mizutani, Hidemasa; Kaifu, Noriyuki; and Kameshima, Toshio, 5,703,666, Cl. 349-61.000.
Kameyama, Fumio, to Brother Kogyo Kabushiki Kaisha. Tool magazine having grips capable of maintaining tool gripping force regardless of orientation of magazine disk. 5,702,336, Cl. 483-56.000.
Kameyama, Masaomi: *See—*
Hirukawa, Shigeru; Shiraishi, Naomasa; and Kameyama, Masaomi, 5,703,675, Cl. 355-53.000.
Kamiguchi, Yuzo: *See—*
Iwasaki, Hitoshi; Ohsawa, Yuichi; Kondoh, Reiko; Hashimoto, Susumu; Sawabe, Atsuhito; Kamiguchi, Yuzo; and Sahashi, Masashi, 5,702,832, Cl. 428-611.000.
Kamo, Hiroaki: *See—*
Yamaguchi, Tohru; and Kamo, Hiroaki, 5,703,325, Cl. 174-50.000.
Kämpf, Klaus: *See—*
Adamek, Wolfgang; Kretschmer, Horst; Eatrup, Hubert Grosse; Nienhaus, Clemens; Herchenbach, Paul; Sarfert, Andreas; Kämpf, Klaus; and Schott, Wilhelm, 5,702,306, Cl. 464-172.000.
Kamps, Richard Joseph; Behnke, Janica Sue; Chen, Fung-jou; and Radtke, Darnell Clarence, to Kimberly-Clark Worldwide, Inc. Soft high bulk tissue. 5,702,571, Cl. 162-117.000.
Kanbe, Junichiro: *See—*
Mouri, Akihiro; Toyono, Tsutomu; Kaneko, Shuzo; Inaba, Yutaka; and Kanbe, Junichiro, 5,703,614, Cl. 345-97.000.
Kandpal, Tara C.: *See—*
Dreiman, Nelik I.; and Kandpal, Tara C., 5,701,668, Cl. 29-888.020.
Kanebo, Ltd.: *See—*
Sugai, Ryuji; Murakami, Umeji; and Yamori, Yukio, 5,703,212, Cl. 530-360.000.
Kaneda, Kitahiro: *See—*
Ohta, Seiya; Kaneda, Kitahiro; Takei, Hirofumi; and Tanaka, Taeko, 5,703,638, Cl. 348-220.000.
Kanegafuchi Kagaku Kogyo Kabushiki Kaisha: *See—*
Iwakiri, Hiroshi; Fujita, Masayuki; and Hasegawa, Takashi, 5,703,146, Cl. 523-200.000.
Kanehara, Kenji: *See—*
Morishima, Shingo; Yamada, Jun; Kanehara, Kenji; and Yoshinaga, Tohru, 5,701,736, Cl. 60-297.000.
Kaneko, Katsumi: *See—*
Sato, Yuzo; Kaneko, Katsumi; and Saito, Yasushi, 5,703,530, Cl. 330-149.000.
Kaneko, Shuzo: *See—*
Mouri, Akihiro; Toyono, Tsutomu; Kaneko, Shuzo; Inaba, Yutaka; and Kanbe, Junichiro, 5,703,614, Cl. 345-97.000.
Kaneta, Mayumi: *See—*
Nakai, Satoru; Kaneta, Mayumi; Kikumoto, Yoshikazu; Hong, Yeong-Man; Kawai, Kazuyoshi; Takegata, Setsuko; Ishii, Kiyoshi; Yanagihara, Yasuo; and Hirai, Yoshikatsu, 5,702,698, Cl. 424-85.200.
Kang, Dae Soon, to LG Semicon Co., Ltd. Interconnection structure for attaching a semiconductor device to a substrate. 5,703,406, Cl. 257-778.000.
Kang, Sun-Woong: *See—*
Oh, Seung-Hun; Doh, Gyun-Hae; and Kang, Sun-Woong, 5,702,497, Cl. 65-412.000.
Kani, Rikako: *See—*
Hayase, Shuzi; Nakano, Yoshihiko; and Kani, Rikako, 5,702,776, Cl. 428-1.000.
Kanjo, Wajih; Smith, Eric; Demoise, Thomas J.; Girotti, Michael; McCabe, Thomas; Fessler, Charles B.; and Natschke, Scott, to Westinghouse Air Brake Company. Railway hand brake apparatus with visual condition indicator. 5,701,974, Cl. 188-1.11R.
Kanjo, Wajih, to Westinghouse Air Brake Company. Rotary drawbar assembly for a railway freight car. 5,702,012, Cl. 213-62.00R.
Kanna, Shigeo; and Uetake, Akihito, to Seikon Epson Corporation. Motor control apparatus. 5,703,768, Cl. 363-98.000.
Kanno, Syoichi: *See—*
Koseki, Toshinori; Maeda, Kunio; and Kanno, Syoichi, 5,702,810, Cl. 428-318.800.
Kansai Paint Co., Ltd.: *See—*
Imai, Genji; Iwasawa, Naozumi; and Yamaoka, Tsuguo, 5,702,872, Cl. 430-326.000.
Kansas State University Research Foundation: *See—*
Iandolo, John J.; and Crupper, Scott, 5,703,040, Cl. 514-2.000.
Kantner, Steven S.: *See—*
Yasis, Rafael M.; Uy, Rosa; Marcus, Barbara J.; and Kantner, Steven S., 5,702,753, Cl. 427-2.120.
Kanto Kagaku Kabushiki Kaisha: *See—*
Yamada, Nobuaki; Kozaki, Shuichi; Mizobe, Hoyo; Yoshida, Masahiko; and Suzuki, Kenji, 5,702,642, Cl. 252-299.660.
Kanzaki Kokyukoki Mfg. Co.: *See—*
Ohashi, Ryota; Okada, Hideaki; and Nagai, Toshio, 5,701,739, Cl. 60-453.000.
Kanzaki, Tomoyuki, to Fujitsu Limited. Method for compensating time in transmitting unit and transmitting system. 5,704,030, Cl. 395-182.100.
Kao Corporation: *See—*

Ichinose, Susumu; Nishizawa, Yoshinori; Ohuchi, Atsushi; Kidena, Hideshi; and Hotta, Mitsuyuki, 5,702,691, Cl. 424-70.100.
Yoshida, Satoshi; Yanagi, Hideki; Sakai, Kouichi; and Nawa, Masayoshi, 5,702,510, Cl. 106-31.600.
Yoshida, Wataru; Fukushima, Tetsuaki; Taniguchi, Hideki; and Abe, Hiroshi, 5,703,264, Cl. 558-316.000.
Karjalainen, Arto Johannes; Södervall, Maria-Liisa; Kalapudas, Arja Marketta; Pelkonen, Reino Olavi; Laine, Aire Maria; Lammintausta, Risto Arvo Sakari; and Salonen, Jarmo Sakari, to Oy, Orion-yhtymä . Selective aromatase inhibiting compounds. 5,703,109, Cl. 514-383.000.
Karunasiri, Tissa R.; Bell, David A.; and Ryan, Bruce M., to Amerigon, Inc. Radio frequency energy management system. 5,703,464, Cl. 320-19.000.
Karur, Chandresekar R.; Vanden Berg, Ted A.; Jairazbhoy, Vivek A.; and Hitchen, Christopher, to Ford Motor Company. Bobbin assembly for a vehicle instrument gauge. 5,703,290, Cl. 73-430.000.
Kasahara, Tamiyoshi: *See—*
Satou, Masaharu; Kasahara, Tamiyoshi; Murakami, Takuya; Kawagoe, Kenji; Uno, Takaaki; Aimoto, Hideo; and Horiuchi, Tamaki, 5,702,122, Cl. 280-691.000.
Kase, Hiroshi: *See—*
Suzuki, Fumio; Koike, Nobuaki; Shimada, Junichi; Nakamura, Joji; Shiozaki, Shizuo; Kitamura, Shigeto; Ichikawa, Shunji; Kase, Hiroshi; and Nonaka, Hiromi, 5,703,085, Cl. 514-263.000.
Kashino, Toshio: *See—*
Arashima, Teruo; Kimura, Makiko; Kashino, Toshio; Sugitani, Hiroshi; Hattori, Yoshifumi; Ikeda, Masami; Saito, Asao; Masuda, Kazuaki; Saito, Akio; and Orikasa, Tsuyoshi, 5,703,632, Cl. 347-47.000.
Higuma, Masahiko; Ikeda, Masami; Asai, Naohito; Abe, Tsutomu; Kashino, Toshio; Ohshima, Noriyoshi; Okazaki, Takeshi; Sugimoto, Hitoshi; and Tajima, Hiroki, 5,701,995, Cl. 206-205.000.
Kasper, Hermann K.: *See—*
Maxim, Rosemary S.; and Kasper, Hermann K., 5,702,128, Cl. 283-81.000.
Kataho, Takuo: *See—*
Ohtani, Yasuo; Kataho, Takuo; Satoh, Makoto; Tanaka, Tsutomu; Nose, Yoshimasa; Kobayashi, Kazuyoshi; Uchikawa, Tetsuhide; and Hamahata, Toshihiro, 5,703,901, Cl. 373-109.000.
Katakura, Kazuhiko: *See—*
Narita, Toshihiko; Nakamura, Hiroaki; Katakura, Kazuhiko; and Nakaya, Yoshihito, 5,703,671, Cl. 355-32.000.
Kataoka, Masaki: *See—*
Yamasaki, Kazuyuki; Kataoka, Masaki; Sakata, Kazuyuki; and Imazu, Shirou, 5,702,594, Cl. 210-151.000.
Kato, Hirokazu: *See—*
Tashiro, Masashi; and Kato, Hirokazu, 5,703,308, Cl. 84-609.000.
Kato, Hironori; Nakao, Masanori; and Ida, Yuichi, to Alps Electric Co., Ltd. Rotary connector. 5,702,260, Cl. 439-164.000.
Kato, Takeshi: *See—*
Naka, Takehiko; Nishikawa, Kohei; and Kato, Takeshi, 5,703,110, Cl. 514-396.000.
Kato, Toshiro, to L'Air Liquide, Societe Anonyme pour L'Etude et L'Exploitation des Procedes Georges Claude. Method for charging powdery heat insulator into a thermally insulated, double-shelled tank. 5,702,655, Cl. 264-85.000.
Kato, Yasuhiko: *See—*
Watari, Masao; Ishii, Kazuo; Kato, Yasuhiko; Ogawa, Hiroaki; Omote, Masanori; Watanabe, Kazuo; and Minamino, Katsuki, 5,704,013, Cl. 395-23.000.
Kato, Yoshikazu: *See—*
Kobayashi, Masakazu; and Kato, Yoshikazu, 5,703,868, Cl. 369-288.000.
Katogi, Sadaji: *See—*
Kawashima, Kazuki; Katogi, Sadaji; and Hida, Yoshikazu, 5,702,317, Cl. 474-110.000.
Katohno, Noboru; Tsurumi, Yoshihisa; and Iwama, Chikara, to Hitachi, Ltd. Magnetic recording reproduction apparatus with improved adjustment characteristics for audio-control head. 5,703,737, Cl. 360-109.000.
Katsumata, Kenji: *See—*
Tsuru, Yasutaka; Okamura, Takumi; Kimura, Shoji; Yamamoto, Yuji; Murata, Toshinori; Katsumata, Kenji; Akiyama, Moriyoshi; and Eda, Takanori, 5,703,658, Cl. 348-554.000.
Katsuyama, Yukio; and Yamakawa, Kengo, to Fujitsu Limited. Library apparatus with a plurality of cells for storing cartridges accommodating memory media therein and method for assembling library apparatus. 5,703,843, Cl. 369-34.000.
Kauer, James C.: *See—*
Lewis, Michael E.; Kauer, James C.; Smith, Kevin R.; Callison, Kathleen V.; Baldino, Frank; Neff, Nicola; and Iqbal, Mohamed, 5,703,045, Cl. 514-12.000.
Kaufman, Kenneth: *See—*
Chuang, Strong C.; Kaufman, Kenneth; and Schiesser, Robert H., 5,701,682, Cl. 34-115.000.
Kaul, Pradeep: *See—*
Kay, Stanley E.; Kaul, Pradeep; Parr, Michael I.; Avis, Graham; Corrigan, John E., III; Wendling, Daniel; and Mehta, Ashok D., 5,703,881, Cl. 370-468.000.
Kaup GmbH & Co. KG: *See—*
Kaup, Otmar, 5,701,800, Cl. 92-128.000.
Kaup, Otmar, to Kaup GmbH & Co. KG. Pressure medium drive with a cylinder and a plunger. 5,701,800, Cl. 92-128.000.
Kawabata, Masami: *See—*
Sato, Akihiko; Mizutani, Kenzo; Kawabata, Masami; and Sumiyoshi, Iwao, 5,702,846, Cl. 430-2.000.
Kawada, Naoki; Yamazaki, Noritsugu; Imoto, Takafumi; and Ikura, Kiyoshi, to Daicel Chemical Industries, Ltd. Process for producing optically active triazole compounds and method of racemizing optically active triazole compounds. 5,702,928, Cl. 435-121.000.
Kawagoe, Kenji: *See—*
Satou, Masaharu; Kasahara, Tamiyoshi; Murakami, Takuya; Kawagoe, Kenji; Uno, Takaaki; Aimoto, Hideo; and Horiuchi, Tamaki, 5,702,122, Cl. 280-691.000.
Kawaguchi, Akio, to Toyota Jidosha Kabushiki Kaisha. Method for regenerating a particulate collection filter and an exhaust emission control system with a particulate collection filter. 5,701,735, Cl. 60-274.000.
Kawaguchi, Kunio: *See—*
Kondo, Tetsujiro; Fujimori, Yasuhiro; Takahashi, Kenji; and Kawaguchi, Kunio, 5,703,652, Cl. 348-421.000.
Kawai, Kazuyoshi: *See—*
Nakai, Satoru; Kaneta, Mayumi; Kikumoto, Yoshikazu; Hong, Yeong-Man; Kawai, Kazuyoshi; Takegata, Setsuko; Ishii, Kiyoshi; Yanagihara, Yasuo; and Hirai, Yoshikatsu, 5,702,698, Cl. 424-85.200.
Kawai, Kenzou: *See—*
Funakoshi, Shinji; and Kawai, Kenzou, 5,703,196, Cl. 528-196.000.
Kawakami, Hideaki, to Komatsu Ltd.; and Komatsu Industries Corporation. Die protection apparatus for a hydraulic press. 5,701,811, Cl. 100-50.000.
Kawakami, Hiromichi; and Tani, Hiroji, to Murata Mfg. Co., Ltd. Insulation paste containing glass. 5,702,996, Cl. 501-14.000.
Kawakami, Soichiro; and Kobayashi, Naoya, to Canon Kabushiki Kaisha. Secondary battery using lithium. 5,702,845, Cl. 429-224.000.
Kawakami, Tatsuya, to Shimano, Inc. Shifting device for a bicycle. 5,701,786, Cl. 74-502.200.
Kawamoto, Seiichi, to Sony Corporation. Image sensor covered by a protective film and an organic film to decrease variations in spectral sensitivity. 5,703,355, Cl. 250-214.100.
Kawamoto, Shiro: *See—*
Kurihara, Katsumi; Kawamoto, Shiro; Nemazi, John E.; and Conger, William G., 5,701,855, Cl. 123-73.0AD.
Kawamura, Naoshi, to Koito Manufacturing Co., Ltd. Vehicular lamp having simplified structure and reduced condensation. 5,702,173, Cl. 362-80.000.
Kawano, Yuji: *See—*
Suzuki, Shigehisa; Fukami, Tatsuya; Fujii, Yoshio; Kawano, Yuji; and Maeda, Yoshinobu, 5,703,733, Cl. 360-77.010.
Kawasaki Kasei Chemicals Ltd.: *See—*
Numata, Shigeaki; and Shibuya, Souichi, 5,702,615, Cl. 210-759.000.
Kawasaki Steel Corporation: *See—*
Inokuti, Yukio, 5,702,541, Cl. 148-308.000.
Kawashima, Kazuki; Katogi, Sadaji; and Hida, Yoshikazu, to NTN Corporation. Autotensioner. 5,702,317, Cl. 474-110.000.
Kawasugi, Kazuhiro, to Casio Computer Co., Ltd. Display driving device. 5,703,616, Cl. 345-98.000.
Kay, Stanley E.; Kaul, Pradeep; Parr, Michael I.; Avis, Graham; Corrigan, John E., III; Wendling, Daniel; and Mehta, Ashok D., to Hughes Electronics. Multi-subscriber unit for radio communication system and method. 5,703,881, Cl. 370-468.000.
Kayama, Masayoshi: *See—*
Hayakawa, Yuuichi; Saitoh, Shinichi; Matsuzaki, Isao; and Kayama, Masayoshi, 5,703,739, Cl. 360-121.000.
Kayan, Helmut L.: *See—*
Kieturakis, Maciej J.; Mollenauer, Kenneth H.; Monfort, Michelle Y.; and Kayan, Helmut L., 5,702,416, Cl. 606-193.000.
Kazama, Tohio, to Alps Electric Co., Ltd. Magnetic head and magneto-optical recording device. 5,703,840, Cl. 369-13.000.
Kazmar, Theodore R.: *See—*
Cui, Changxing; Baughman, Ray H.; Iqbal, Zafar; Kazmar, Theodore R.; and Dahlstrom, David K., 5,702,629, Cl. 252-62.90R.
Kedem, Gershon: *See—*
Kellam, Mark D.; and Kedem, Gershon, 5,702,868, Cl. 430-312.000.
Keefe, Walter D., Jr.: *See—*
Philips, Nicholas A.; and Keefe, Walter D., Jr., 5,702,054, Cl. 229-110.000.
Keenan, Michael John: *See—*
Cusumano, Joseph Victor; Diana, William Daniel; Emert, Jacob; Gorda, Keith Raymond; Schlosberg, Richard H.; Young, David A.; Yezrielev, Albert I.; Eckstrom, William Bernard; Manry, Edris Eileen; and Keenan, Michael John, 5,703,256, Cl. 554-224.000.
Keepers, Curtis Brent: *See—*
Wannagot, Gary A.; Keepers, Curtis Brent; Goebel, Timothy R.; Cwiakala, James M., Jr.; and Connors, Clifford J., 5,703,354, Cl. 250-214.0VT.
Keilhau, Theo, to MAN Roland Druckmaschinen AG. Folder for selectively producing once or twice cross-folded products. 5,702,341, Cl. 493-426.000.
Keiper Recaro GmbH & Co.: *See—*
Schönenberg, Frank-Heinrich, 5,702,154, Cl. 297-257.000.
Keita, Gabriel; Renaudineau, Joel; and Yean, Leanirith, to Essilor International (Compagnie Generale d'Optique). Low yellow index polymer compositions, polymerizable compositions and lenses using said compositions. 5,702,825, Cl. 428-500.000.
Keitel, Todd: *See—*
Tham, Robert Q.; and Keitel, Todd, 5,701,888, Cl. 128-204.210.
Keith, Peter T.; and Euteneuer, Charles L., to SciMed Life Systems, Inc. Balloon catheter with distal guide wire lumen. 5,702,439, Cl. 604-96.000.

Keith, Peter T.: *See—*
Euteneuer, Charles L.; Mattison, Richard C.; Adams, Daniel O.; Hektner, Thomas R.; and Keith, Peter T., 5,702,364, Cl. 604-96.000.
Kell, Michael: *See—*
DeWitt, Sheila H. H.; Kell, Michael; Pavia, Michael R.; Kiely, John S.; Schroeder, Mel C.; Stankovic, Charles J.; and Ware, Steven, 5,702,672, Cl. 422-131.000.
Kellam, Mark D.; and Kedem, Gershon, to Astarix Inc. High resolution mask programmable via selected by low resolution photomasking. 5,702,868, Cl. 430-312.000.
Keller, Kathleen E.: *See—*
Lucas, Gary L.; Keller, Kathleen E.; Agatston, David; and Caplan, Drew, 5,703,938, Cl. 375-112.000.
Kelley, Gordon Arthur, Jr.: *See—*
Bertin, Claude Louis; Howell, Wayne John; Hedberg, Erik Leigh; Kalter, Howard Leo; and Kelley, Gordon Arthur, Jr., 5,702,984, Cl. 437-208.000.
Kelley, Paul E.: *See—*
Hoekman, Doneil J.; and Kelley, Paul E., 5,703,358, Cl. 250-282.000.
Kelly, George R.: *See—*
Jachimowicz, Karen E.; Kelly, George R.; and Lebby, Michael S., 5,703,664, Cl. 349-58.000.
Kelly, Hugh-Peter Granville, to Linear Drives Limited. Linear motor for extended travel. 5,703,417, Cl. 310-12.000.
Kelly, Joseph M.: *See—*
Afonso, Adriano; Kelly, Joseph M.; and Wolin, Ronald L., 5,703,090, Cl. 514-290.000.
Kemp, Bruce E.: *See—*
Martin, Thomas J.; Moseley, Jane M.; Kemp, Bruce E.; and Wettenhall, Richard E. H., 5,703,207, Cl. 530-324.000.
Kempner, Kenneth M.: *See—*
Adam, Dan R.; Kempner, Kenneth M.; Vivino, Mark A.; Tucker, Eben E.; and Jones, Michael, 5,701,898, Cl. 128-661.090.
Kennedy, Brian Steven; and Hayburst, Peter, to TBA Industrial Products Limited. Incandescent mantles. 5,701,730, Cl. 57-224.000.
Kennedy, Dennis M., to Honeywell Inc. Circuit and method for measuring current in an H-bridge drive network. 5,703,490, Cl. 324-650.000.
Kennedy, James Murrell: *See—*
Ford, James Arthur; Bertva, Don Lee; Kennedy, James Murrell; and Presdorf, Ronald Lynn, 5,701,940, Cl. 160-84.050.
Kennedy, Thomas A.: *See—*
Roth, Steve; and Kennedy, Thomas A., 5,703,590, Cl. 342-13.000.
Kennedy, Timothy J.; Stowell, Davin; and Bolden, Scott, to General Housewares Corp. Food grater. 5,702,061, Cl. 241-93.000.
Kerl Holzbau GmbH: *See—*
Thoss, Werner, 5,701,716, Cl. 52-713.000.
Kerlin, Klaus Gunter; and Hamacher, Peter, to Herberts GmbH. Simplified process for producing a corrosion-protecting, well adhering lacquer coating and the workpieces obtained thereby. 5,702,581, Cl. 204-486.000.
Kern, John J.; Stein, Richard L.; and Wildrick, J. Preston, to Survivair, Inc. Disposable face mask. 5,701,893, Cl. 128-206.240.
Kerr-McGee Chemical Corp.: *See—*
Sheargold, Stephen W.; and Andersen, Terrell N., 5,702,679, Cl. 423-599.000.
Kerr, Stuart, III: *See—*
Priou, Christian; and Kerr, Stuart, III, 5,703,137, Cl. 522-25.000.
Kerschner, JoAnne H.: *See—*
Cummins, Thomas J.; Atwood, Susan Melissa; Bergmeyer, Lynn; Findlay, John Bruce; Sutherland, John W.H.; and Kerschner, JoAnne H., 5,702,901, Cl. 435-6.000.
Kerschner, JoAnne Hansen: *See—*
Ekeze, Tobias E.; and Kerschner, JoAnne Hansen, 5,702,884, Cl. 435-5.000.
Keskitalo, Ilkka: *See—*
Ojanpera, Tero; and Keskitalo, Ilkka, 5,703,873, Cl. 370-332.000.
Kessler, Christoph: *See—*
Höltke, Hans-Joachim; Seibl, Rudolf; Schmitz, Gudrun; Schöler, Hans Robert; Kessler, Christoph; and Mattes, Ralf, 5,702,888, Cl. 435-6.000.
Kesterson, Russell R.: *See—*
Bryce, Nathan K.; and Kesterson, Russell R., 5,702,253, Cl. 434-236.000.
Ketels, Dieter, to Nordischer Maschinenbau Rud. Baader Gmbh & Co KG. Device for positioning fish. 5,702,295, Cl. 452-180.000.
Key, Brian R.: *See—*
Kamen, Dean L.; Ambrogi, Robert R.; Duggan, Robert J.; Heinzmann, Richard Kurt; Key, Brian R.; Skoskiewicz, Andrzej; and Kristal, Phyllis K., 5,701,965, Cl. 180-7.100.
Keyser, Frank Ray, III: *See—*
Gould, Scott Whitney; Furtek, Frederick Curtis; Keyser, Frank Ray, III; Worth, Brian A.; and Zittritsch, Terrance John, 5,703,498, Cl. 326-80.000.
Keyson, David V., to U.S. Philips Corporation. Cursor/pointer speed control based on directional relation to target objects. 5,703,620, Cl. 345-145.000.
Khalsa, Ek Ong Kar S. Box car lock. 5,701,768, Cl. 70-14.000.
Khan, Mujibun Nisa; and Zucker, Jane Elisa, to Lucent Technologies Inc. Single-mode waveguide structure for optoelectronic integrated circuits and method of making same. 5,703,989, Cl. 385-130.000.
Khouri Biomedical Research, Inc.: *See—*
Khouri, Roger K., 5,701,917, Cl. 128-897.000.
Khouri, Roger K., to Khouri Biomedical Research, Inc. Method and apparatus for promoting soft tissue enlargement and wound healing. 5,701,917, Cl. 128-897.000.
Kidena, Hideshi: *See—*
Ichinose, Susumu; Nishizawa, Yoshinori; Ohuchi, Atsushi; Kidena, Hideshi; and Hotta, Mitsuyuki, 5,702,691, Cl. 424-70.100.
Kidou, Hirokazu: *See—*
Tomozane, Shotaro; Kidou, Hirokazu; and Nakabayashi, Yukikazu, 5,702,496, Cl. 65-102.000.
Kieffer, Joseph W., to Wagner Spray Tech Corporation. Outlet fitting for a portable turbine. 5,702,131, Cl. 285-139.300.
Kiekert AG: *See—*
Funk, Bernhard; and Menz, Gerhard, 5,702,136, Cl. 292-336.300.
Kiely, John S.: *See—*
DeWitt, Sheila H. H.; Kell, Michael; Pavia, Michael R.; Kiely, John S.; Schroeder, Mel C.; Stankovic, Charles J.; and Ware, Steven, 5,702,672, Cl. 422-131.000.
Kiely, Philip: *See—*
Claisse, Paul; and Kiely, Philip, 5,703,892, Cl. 372-32.000.
Kienberger, Manfred: *See—*
Hillrichs, Eilhard; Kienberger, Manfred; and Sander, Ulrich, 5,702,585, Cl. 205-468.000.
Kiener, Andreas; Roduit, Jean-Paul; and Glöckler, Rainer, to Lonza, Ltd. Microbiological process for the preparation of heteroaromatic carboxylic acids using *Alcaligenes faecalis* . 5,702,930, Cl. 435-122.000.
Kiesele, Herbert; Chrzan, Rigobert; and Mett, Frank, to Drägerwerk Aktiengesellschaft. Electrochemical measuring cell. 5,702,576, Cl. 204-415.000.
Kieturakis, Maciej J.; Mollenauer, Kenneth H.; Monfort, Michelle Y.; and Kayan, Helmut L., to Genral Surgical Innovations, Inc. Apparatus for developing an anatomic space for laparoscopic hernia repair and patch for use therewith. 5,702,416, Cl. 606-193.000.
Kikuchi, Tomoe: *See—*
Koyama, Mikio; Hayashi, Kenji; and Kikuchi, Tomoe, 5,702,860, Cl. 430-137.000.
Kikumoto, Yoshikazu: *See—*
Nakai, Satoru; Kaneta, Mayumi; Kikumoto, Yoshikazu; Hong, Yeong-Man; Kawai, Kazuyoshi; Takegata, Setsuko; Ishii, Kiyoshi; Yanagihara, Yasuo; and Hirai, Yoshikatsu, 5,702,698, Cl. 424-85.200.
Kikuta, Hikaru; and Suzuki, Toshiro, to Aisan Kogyo Kabushiki Kaisha. Ignition coil for an internal combustion engine. 5,703,556, Cl. 336-83.000.
Kilburn, Robert. Light emitting bicycle pedal. 5,702,172, Cl. 362-72.000.
Kilgannon, Patrick D.; and Gallatin, W. Michael, to ICOS Corporation. Polynucleotides encoding human ICAM-4. 5,702,917, Cl. 435-69.100.
Kilgore, Marion D.; and Gano, John C., to Halliburton Energy Services, Inc. High temperature, high pressure retrievable packer. 5,701,954, Cl. 166-119.000.
Killeen, Joseph P.: *See—*
Mahone, William C.; Chandler, Bruce D.; Killeen, Joseph P.; and Garrett, David L., 5,702,205, Cl. 405-169.000.
Kilp, David Patrick: *See—*
Cannon, Nancy Mondrosch; Cannon, Gregory Lewis; and Kilp, David Patrick, 5,703,571, Cl. 340-825.440.
Kilpela, Thomas S.; Iwanski, George J.; Songer, Matthew N.; and Songer, Robert J., to Pioneer Laboratories, Inc. Surgical cable screw connector. 5,702,399, Cl. 606-72.000.
Kim, Chang-seob; Son, Seok-bong; Kim, Sang-kyun; and Jeong, Bong-uk, to Samsung Display Devices Co., Ltd. Directly heated cathode structure. 5,703,429, Cl. 313-346.00R.
Kim, Chang-Soo: *See—*
Kim, Sang-Keun; Kim, Seoung-Ho; Lee, Haeng-Woo; Choi, Cheol-Kyu; Kim, Jeong-Deuk; Hong, Jin-Who; Kim, Chang-Soo; and Whang, Kong-Hyun, 5,703,139, Cl. 522-42.000.
Kim, Sang-Keun; Lee, Haeng-Woo; Choi, Cheol-Kyu; Kim, Jeong-Deuk; Hong, Jin-Who; Kim, Chang-Soo; and Whang, Kong-Hyun, 5,703,142, Cl. 522-90.000.
Kim, Choon Hwan: *See—*
Shin, Chan Soo; and Kim, Choon Hwan, 5,702,568, Cl. 156-644.100.
Kim, Chull-Soo: *See—*
Park, Churoo; Jang, Hyun-Soon; Kim, Chull-Soo; Kim, Myung-Ho; Lee, Seung-Hun; Lee, Si-Yeol; Lee, Ho-Cheol; Kim, Tae-Jin; and Choi, Yun-Ho, 5,703,828, Cl. 365-230.030.
Kim, Dong Yeon: *See—*
Kim, Su Ung; Kim, Dong Yeon; Chung, Gi ju; Hong, Sung Kol; Park, Sung Jun; Nam, Sang Hoon; and Lee, Yong Suk, 5,703,097, Cl. 514-338.000.
Kim, Gyung-Yeol, to SamSung Electronics Co., Ltd. Method for interfacing electrical signals transmitted between an engine controller and a video controller. 5,704,023, Cl. 395-114.000.
Kim, Hyung Suk; and Shin, Kwang Young, to LG Electronics, Inc. Motion picture expert group (MPEG) video coder/decoder apparatus. 5,703,651, Cl. 348-416.000.
Kim, In-eung; and Choukh, Alexandre M., to Samsung Electro-Mechanics Co., Ltd. Magnetic head magneto-resistive element with c-shaped multi-layered structure. 5,703,738, Cl. 360-113.000.
Kim, Jeong Ho, to Hyundai Electronics Industries Co., Ltd. Method for fabricating capacitor of semiconductor device. 5,702,974, Cl. 437-60.000.
Kim, Jeong-Deuk: *See—*
Kim, Sang-Keun; Kim, Seoung-Ho; Lee, Haeng-Woo; Choi, Cheol-Kyu; Kim, Jeong-Deuk; Hong, Jin-Who; Kim, Chang-Soo; and Whang, Kong-Hyun, 5,703,139, Cl. 522-42.000.

Kim, Sang-Keun; Lee, Haeng-Woo; Choi, Cheol-Kyu; Kim, Jeong-Deuk; Hong, Jin-Who; Kim, Chang-Soo; and Whang, Kong-Hyun, 5,703,142, Cl. 522-90.000.
Kim, Jeoung Woo, to Hyundai Electronics Industries Co., Ltd. Flash memory cell and method of making the same. 5,702,965, Cl. 47-43.000.
Kim, Jong Hyun, to LG Electronics Inc. External memory control circuit for sound field processing digital signal processor. 5,703,956, Cl. 381-63.000.
Kim, Kyung Jin: *See—*
Doerschuk, Claire M.; Fong, Sherman; Hebert, Caroline Alice; Kim, Kyung Jin; and Leong, Steven R., 5,702,946, Cl. 435-320.100.
Kim, Moon Ju: *See—*
George, Jonel; Glassen, Steven Gardner; Krygowski, Matthew Anthony; Kim, Moon Ju; Preston, Allen Herman; and Stucki, David Emmett, 5,704,055, Cl. 395-402.000.
Kim, Myung Seon, to Hyundai Electronics Industries, Co., Ltd. Method for forming fine pattern in semiconductor device. 5,702,867, Cl. 430-291.000.
Kim, Myung-Ho: *See—*
Park, Churoo; Jang, Hyun-Soon; Kim, Chull-Soo; Kim, Myung-Ho; Lee, Seung-Hun; Lee, Si-Yeol; Lee, Ho-Cheol; Kim, Tae-Jin; and Choi, Yun-Ho, 5,703,828, Cl. 365-230.030.
Kim, Sang-Ho, to Daewoo Electronics, Co., Ltd. Apperatus for encoding/decoding a video signal. 5,703,647, Cl. 348-403.000.
Kim, Sang-Keun; Kim, Seoung-Ho; Lee, Haeng-Woo; Choi, Cheol-Kyu; Kim, Jeong-Deuk; Hong, Jin-Who; Kim, Chang-Soo; and Whang, Kong-Hyun, to HANWHA Chemical Corporation. Photo-curable resin composition and product coated therewith. 5,703,139, Cl. 522-42.000.
Kim, Sang-Keun; Lee, Haeng-Woo; Choi, Cheol-Kyu; Kim, Jeong-Deuk; Hong, Jin-Who; Kim, Chang-Soo; and Whang, Kong-Hyun, to Hanwha Chemical Corporation. Photo-curable prepolymer comprising quaternary ammonium salt and process for preparing thereof. 5,703,142, Cl. 522-90.000.
Kim, Sang-kyun: *See—*
Kim, Chang-seob; Son, Seok-bong; Kim, Sang-kyun; and Jeong, Bong-uk, 5,703,429, Cl. 313-346.00R.
Kim, Seoung-Ho: *See—*
Kim, Sang-Keun; Kim, Seoung-Ho; Lee, Haeng-Woo; Choi, Cheol-Kyu; Kim, Jeong-Deuk; Hong, Jin-Who; Kim, Chang-Soo; and Whang, Kong-Hyun, 5,703,139, Cl. 522-42.000.
Kim, Su Ung; Kim, Dong Yeon; Chung, Gi ju; Hong, Sung Kol; Park, Sung Jun; Nam, Sang Houn; and Lee, Yong Suk, to Il-Yang Pharm. Co., Ltd. 5-pyrrolyl-2-pyridylmethylsulfinyl benzimidazole derivatives. 5,703,097, Cl. 514-338.000.
Kim, Sung-Hyun, to SamSung Electronics Co., Ltd. Method for automatically receiving image data in facsimile system regardless of whether such facsimile system is operating in private line mode or public line mode. 5,703,699, Cl. 358-442.000.
Kim, Tae Yoon, to LG Electronics Inc. Automatic cooking controlling apparatus and method employing a narrow viewing angle of an infrared absorptive thermopile sensor. 5,702,626, Cl. 219-711.000.
Kim, Tae-Jin: *See—*
Park, Churoo; Jang, Hyun-Soon; Kim, Chull-Soo; Kim, Myung-Ho; Lee, Seung-Hun; Lee, Si-Yeol; Lee, Ho-Cheol; Kim, Tae-Jin; and Choi, Yun-Ho, 5,703,828, Cl. 365-230.030.
Kim, Yong-ho; Lee, Young-sik; and Chun, Hee, to Samsung Electronics Co., Ltd. Proportional solenoid valve control system. 5,703,750, Cl. 361-187.000.
Kim, Young Hwan, to Korea Telecommunication Authority. Operational transconductance amplifier with good linearity. 5,703,534, Cl. 330-277.000.
Kimberly-Clark Worldwide, Inc.: *See—*
Chuang, Strong C.; Kaufman, Kenneth; and Schiesser, Robert H., 5,701,682, Cl. 34-115.000.
Collier, Leslie Warren, IV; Yahiaoui, Ali; Johns, Eric Mitchell; and Durrance, Debra Hartley, 5,702,377, Cl. 604-361.000.
Glaug, Frank Steven; Brunner, Michael Scott; Cochrane, Faith Eileen; Durrance, Debra Hartley; Olson, Christopher Peter; Schleinz, Robert Joseph; and Thiessen, Richard Harry, 5,702,376, Cl. 604-361.000.
Kamps, Richard Joseph; Behnke, Janica Sue; Chen, Fung-jou; and Radtke, Darnell Clarence, 5,702,571, Cl. 162-117.000.
Shet, Ramakant Tukaram; and Wallajapet, Palani Raj R., 5,703,225, Cl. 536-39.000.
Kimmel, James S.: *See—*
Bar-Or, David; Kimmel, James S.; and Roth, Francis A., 5,702,351, Cl. 600-190.000.
Kimura, Hiromi: *See—*
Kubomura, Kenji; Kimura, Hiromi; and Shibata, Hirotaka, 5,702,993, Cl. 442-204.000.
Kimura, Makiko: *See—*
Arashima, Teruo; Kimura, Makiko; Kashino, Toshio; Sugitani, Hiroshi; Hattori, Yoshifumi; Ikeda, Masami; Saito, Asao; Masuda, Kazuaki; Saito, Akio; and Orikasa, Tsuyoshi, 5,703,632, Cl. 347-47.000.
Kimura, Noboru; and Iwai, Ryouji, to Shin-Etsu Chemical Co., Ltd. Method for the preparation of pyrolytic boron nitride-clad double-coated article. 5,702,764, Cl. 427-248.100.
Kimura, Shoji: *See—*
Tsuru, Yasutaka; Okamura, Takumi; Kimura, Shoji; Yamamoto, Yuji; Murata, Toshinori; Katsumata, Kenji; Akiyama, Moriyoshi; and Eda, Takanori, 5,703,658, Cl. 348-554.000.
Kimura, Shuichi; and Tsukagoshi, Tsuyoshi, to Olympus Optical Co., Ltd. Tools and method for manipulating organs in human body. 5,702,352, Cl. 600-201.000.
Kinetikos Medical Incorporated: *See—*
Menon, Jay, 5,702,470, Cl. 623-21.000.
Whipple, Terry L.; and Stone, Glyanis E., 5,702,469, Cl. 623-21.000.
King, Andrew J.: *See—*
Heegard, Chris; King, Andrew J.; Lovely, Sydney; and Kolze, Thomas J., 5,703,887, Cl. 371-42.000.
King, Christopher G.: *See—*
Eckels, Phillip William; Sato, Kazuhiko; Woods, Daniel Christian; Ward, Granville Geer; Hayworth, Gregory Farin; and King, Christopher G., 5,701,744, Cl. 62-47.100.
King, Douglas L.; Barclay, Alasdair G.; and Wellman, Rockie C. System and method of risk transfer and risk diversification including means to assure with assurance of timely payment and segregation of the interests of capital. 5,704,045, Cl. 395-235.000.
King, Gary William, to Medtronic, Inc. Neural stimulation techniques with feedback. 5,702,429, Cl. 607-46.000.
King Jim Co., Ltd.: *See—*
Matsuhashi, Kunihiko; Sodeyama, Hideo; and Inakoshi, Daisuke, 5,702,192, Cl. 400-613.000.
King, Linda S.: *See—*
Raissyan, Anousheh; Wood, Kody Raymond; Jacobi, Michael Joseph; King, Linda S.; Seydel, Lee Chopek; Torbert, Michele Pauline; and Leonard, Robert Gary, 5,703,935, Cl. 379-88.000.
King, Toby St. John. Daul-lumen catheter. 5,702,365, Cl. 604-105.000.
Kingston, David G. I.; Chaudhary, Ashok Gopal; Gharpure, Milind Moreshwar; Rimoldi, John Matthew; and Gunatilaka, A. A. Leslie, to Virginia Tech Intellectual Properties, Inc. 2-Debenzoyl-2-acyl taxol derivatives and methods for making same. 5,703,247, Cl. 548-962.000.
Kinoshita, Hiromi: *See—*
Imai, Kiyoshi; Watanabe, Hideaki; Kinoshita, Hiromi; and Yokoyama, Dai, 5,701,662, Cl. 29-741.000.
Kinoshita, Naoki; and Oozono, Kazuya, to Honda Giken Kogyo Kabushiki Kaisha. Method and apparatus for controlling the charging of a secondary battery using the primary differential of the battery voltage. 5,703,465, Cl. 320-22.000.
Kinoshita, Naoki, to Honda Giken Kogyo Kabushiki Kaisha. System for determining battery conditions. 5,703,469, Cl. 320-48.000.
Kinoshita, Yukihiro: *See—*
Matsuoka, Chikara; Watadani, Takeshi; Wakimoto, Kunihisa; and Kinoshita, Yukihiro, 5,702,159, Cl. 297-452.480.
Kinseki Limited: *See—*
Miyazaki, Shigeyuki; Yokokawa, Hiroshi; and Ninomiya, Yuichi, 5,703,637, Cl. 348-53.000.
Kinzler, Kenneth W.; and Vogelstein, Bert, to Johns Hopkins Unviersity, The. Method and cells for drug identification. 5,702,903, Cl. 435-6.000.
Kinzler, Kenneth W.: *See—*
Vogelstein, Bert; Kinzler, Kenneth W.; and Hamilton, Stanley, 5,702,886, Cl. 435-6.000.
Kipke, Cary A., to Minnesota Mining and Manufacturing Co. Compact dental impression tray for photocurable impression material. 5,702,250, Cl. 433-37.000.
Kirby, Orvalle Theodore: *See—*
Badovinatz, Peter Richard; Chandra, Tushar Deepak; Kirby, Orvalle Theodore; and Pershing, John Arthur, Jr., 5,704,032, Cl. 395-182.020.
Kirii, Kazunari, to Toyota Jidosha Kabushiki Kaisha. Press having gas cylinders of plastically deformable members for even distribution of blank-holding force on pressure member through cushion pins. 5,701,778, Cl. 72-351.000.
Kirino, Fumiyoshi; Toda, Tsuyoshi; Ide, Horishi; Sugiyama, Hisataka; Saito, Atsushi; Tsuchinaga, Hiroyuki; Maeda, Takeshi; Kugiya, Fumio; Kaku, Toshimitsu; Mita, Seiichi; Shigematsu, Kazuo; and Ouchi, Yasuhide, to Hitachi, Ltd. Optical disk apparatus and recording and reading method for an optical disk using the same. 5,703,855, Cl. 369-54.000.
Kiriyama, Norio; and Yokosuka, Hirobumi, to Hitachi, Ltd. Video signal transmitting apparatus. 5,703,645, Cl. 348-388.000.
Kirkpatrick, William R., to Rosemount Inc. Open sensor diagnostic system for temperature transmitter in a process control system. 5,703,575, Cl. 340-870.170.
Kirschner Medical Corporation: *See—*
Craig, Edward Vincent; Kyle, Richard Frank; and Straight, Christopher Bryan, 5,702,486, Cl. 623-23.000.
Kishi, Sohtaroh; Shiba, Yoshio; Miyake, Hidekazu; and Kuenzel, Wilhelm. Method of wet peeling for brewer's spent grain. 5,702,748, Cl. 426-478.000.
Kishino, Takao; Onodaka, Koji; Tanaka, Mitsuru; and Yamaguchi, Satoshi, to Futaba Denshi Kogyo K.K. Drive circuit for image display device. 5,703,610, Cl. 345-74.000.
Kishino, Takao; Yamaura, Tatsuo; Onodaka, Koji; and Itoh, Shigeo, to Futaba Denshi Kogyo K.K. Image display device and drive device therefor. 5,703,611, Cl. 345-74.000.
Kishore, Ganesh Murthy: *See—*
Klee, Harry John; and Kishore, Ganesh Murthy, 5,702,933, Cl. 435-172.300.
Kita, Yuichi: *See—*
Nakagawa, Koichi; Makino, Mitsuaki; and Kita, Yuichi, 5,703,270, Cl. 560-183.000.
Kitagawa, Hiroshi: *See—*
Munakata, Hiroki; Nishimura, Yoichi; Kitagawa, Hiroshi; and Akazaki, Shusuke, 5,701,871, Cl. 123-491.000.
Kitajima, Yasuo: *See—*

Umemoto, Toshio; Fukuda, Masami; Shimoda, Kenji; Kitajima, Yasuo; Kobayashi, Isamu; and Udou, Yurie, 5,703,837, Cl. 368-88.000.
Kitamura, Kazuyuki: *See—*
Shudo, Koichi; Sugioka, Tatsuo; Inazu, Mizuho; Tanaka, Hideyuki; Inoue, Tsutomu; and Kitamura, Kazuyuki, 5,703,128, Cl. 514-563.000.
Kitamura, Noriko: *See—*
Fujiwara, Wataru; Hyoda, Junkoh; Yamazaki, Kenichi; and Kitamura, Noriko, 5,703,157, Cl. 524-822.000.
Kitamura, Shigeto: *See—*
Suzuki, Fumio; Koike, Nobuaki; Shimada, Junichi; Nakamura, Joji; Shiozaki, Shizuo; Kitamura, Shigeto; Ichikawa, Shunji; Kase, Hiroshi; and Nonaka, Hiromi, 5,703,085, Cl. 514-263.000.
Kitamura, Tetsuya; and Mimura, Hideki, to Kabushiki Kaisha Toshiba. Data recording medium having reproduction timing information, and system for reproducing record data by using the reproduction timing information. 5,703,997, Cl. 386-97.000.
Kitch, Steven C.: *See—*
Burke, Dennis W.; Kumar, G. Kris; and Kitch, Steven C., 5,702,485, Cl. 623-23.000.
Kitsukawa, Goro: *See—*
Akiba, Takesada; and Kitsukawa, Goro, 5,703,825, Cl. 365-229.000.
Klammer, Peter J., to Hewlett-Packard Company. Electrocardiographic waveform monitoring method and system. 5,701,907, Cl. 128-696.000.
Klapheke, Christopher G.: *See—*
Schoen, Jerry W.; Dahlstrom, Norris A.; and Klapheke, Christopher G., 5,702,539, Cl. 148-111.000.
Klaras, Louis F.; and Cohn, David B., to Hughes Electronics. Integrated detector for laser remote sensors. 5,703,691, Cl. 356-437.000.
Klee, Harry John; and Kishore, Ganesh Murthy, to Monsanto Company. Control of fruit ripening and senescence in plants. 5,702,933, Cl. 435-172.300.
Kleijn, Willem Bastiaan; and Nahumi, Dror, to Lucent Technologies Inc. RCELP coder. 5,704,003, Cl. 395-2.290.
Klein, Jeffrey L.: *See—*
Maniar, Papu D.; Blumenthal, Roc; Klein, Jeffrey L.; and Wu, Wei, 5,702,981, Cl. 437-192.000.
Kleine, Ulrich: *See—*
Nebel, Gerhard; Georgakos, Georg; and Kleine, Ulrich, 5,703,533, Cl. 330-211.000.
Klemm, Per: *See—*
Molin, Søren; Andersson, Poul Kirketerp; Gerdes, Kenn Axo; and Klemm, Per, 5,702,916, Cl. 435-69.100.
Klever-Kart, Inc.: *See—*
Begum, Paul G.; and Young, Gordon W., 5,703,564, Cl. 340-539.000.
Klier, Eric M.: *See—*
Brown, Alexander M.; and Klier, Eric M., 5,702,342, Cl. 148-406.000.
Kline, Bruce C.: *See—*
Sandhu, Gurpreet S.; and Kline, Bruce C., 5,702,889, Cl. 435-6.000.
Kling, John Phillip, to Whitaker Corporation, The. Pi signal frequency filter method of manufacture. 5,701,665, Cl. 29-825.000.
Klingler, Otmar; Zoller, Gerhard; Jablonka, Bernd; Just, Melitta; Breipohl, Gerhard; Knolle, Jochen; König, Wolfgang; and Stilz, Hans Ulrich, to Hoechst Aktiengesellschaft. Urea derivatives, their preparation and use. 5,703,050, Cl. 514-18.000.
Klosel, Egon, to Besma Beschichtungsmassen GmbH. Moldable film for fastening to a base and shielding from radiation or for insulation of electrically conducting parts. 5,702,994, Cl. 442-229.000.
Klunder, Rento Willem; and Van Werven-Franssen, Gerda Hendrika Maria, to Cordis Corporation. Balloon catheter with balloon protection sheath. 5,702,410, Cl. 606-194.000.
Kneip, Michael; and Danisch, Peter, to BASF Aktiengesellschaft. Water repellent treatment of leather and skins with polysiloxanes functionalized with carboxyl groups in a comb-like manner. 5,702,490, Cl. 8-94.230.
Knipe, Richard E., Jr.; Jacob, Savarimuthu M.; and Mancini, Thomas, to Dalco Industries, Ltd. Water-based flushing for paints and other coatings. 5,701,922, Cl. 134-100.100.
Knoch, Lynnita K.; and Tam, Pak, to Motorola, Inc. Vertical IGFET configuration having low on-resistance and method. 5,703,389, Cl. 257-327.000.
Knoll Aktiengesellschaft: *See—*
Braña, Miguel Fernandez; Berlanga, José Maria Castellano; and Romerdahl, Cynthia, 5,703,089, Cl. 514-284.000.
Knolle, Jochen: *See—*
Klingler, Otmar; Zoller, Gerhard; Jablonka, Bernd; Just, Melitta; Breipohl, Gerhard; Knolle, Jochen; König, Wolfgang; and Stilz, Hans Ulrich, 5,703,050, Cl. 514-18.000.
Knuth, Mark: *See—*
Schnepf, H. Ernest; Stockhoff, Brian; and Knuth, Mark, 5,702,703, Cl. 424-93.461.
Ko, Jung-wan, to Samsung Elecrtronics Co., Ltd. Apparatus for encoding and decoding run length limited code data. 5,703,580, Cl. 341-59.000.
Kobayashi, Fumio: *See—*
Nozaki, Nobuharu; Mitsumoto, Shinji; Kubo, Kazumi; and Kobayashi, Fumio, 5,703,900, Cl. 372-107.000.
Kobayashi, Isamu: *See—*
Umemoto, Toshio; Fukuda, Masami; Shimoda, Kenji; Kitajima, Yasuo; Kobayashi, Isamu; and Udou, Yurie, 5,703,837, Cl. 368-88.000.
Kobayashi, Kazuyoshi: *See—*
Ohtani, Yasuo; Kataho, Takuo; Satoh, Makoto; Tanaka, Tsutomu; Nose, Yoshimasa; Kobayashi, Kazuyoshi; Uchikawa, Tetsuhide; and Hamahata, Toshihiro, 5,703,901, Cl. 373-109.000.
Kobayashi, Kyoko: *See—*
Itoh, Yuichi; Kobayashi, Kyoko; Uchiyama, Akira; and Takehara, Toru, 5,702,827, Cl. 428-519.000.
Kobayashi, Masakazu; and Kato, Yoshikazu, to Nippon Columbia Co., Ltd. Optical information recording medium having discernible obverse and reverse sides. 5,703,868, Cl. 369-286.000.
Kobayashi, Masao: *See—*
Goto, Shinichi; Kobayashi, Masao; Kuzuya, Yasuhisa; and Ichikawa, Hidehito, 5,702,782, Cl. 428-31.000.
Kobayashi, Naoya: *See—*
Kawakami, Soichiro; and Kobayashi, Naoya, 5,702,845, Cl. 429-224.000.
Kobayashi, Seiji: *See—*
Horigome, Toshihiro; and Kobayashi, Seiji, 5,703,853, Cl. 369-48.000.
Kobayashi, Takeya: *See—*
Akamatsu, Mikio; Seki, Kenji; Yamashita, Katsuhiro; Kobayashi, Takeya; and Taniguchi, Takashi, 5,701,762, Cl. 62-636.000.
Kobayashi, Yoshinori: *See—*
Fujiwara, Yuichi; Nakagawa, Chikao; Ito, Hiromi; and Kobayashi, Yoshinori, 5,701,816, Cl. 101-128.400.
Koch Enterprises, Inc.: *See—*
Lee, Adam T.; Wu, Kuang; and Burton, Larry, 5,702,647, Cl. 261-114.500.
Köcher, Christian: *See—*
Herrmann, Wolfgang A.; Fischer, Jakob; Elison, Martina; and Köcher, Christian, 5,703,269, Cl. 560-19.000.
Kock, Norbert Franz: *See—*
Steenblock, Roland Eugen; Kock, Norbert Franz; and Fiedler, Detlef Herbert, 5,703,161, Cl. 525-66.000.
Kocur, Jean: *See—*
Heinrich, Rudolf; Maier, Thomas; Kocur, Jean; and Schlicht, Rainer, 5,703,010, Cl. 504-116.000.
Koda, Koji: *See—*
Umeyama, Koichi; Ogasawara, Tadahiko; Yoshino, Kenji; Watanabe, Katsushi; and Koda, Koji, 5,702,384, Cl. 604-892.100.
Kodaira, Jun-ichi: *See—*
Ohtomo, Fumio; Hayashi, Kunihiro; Kodaira, Jun-ichi; Nishizawa, Hiroyuki; and Yoshino, Kenichiro, 5,703,718, Cl. 359-494.000.
Kodama, Yoshihiro: *See—*
Kumagai, Yorinori; Kodama, Yoshihiro; Kojima, Yoichi; and Terao, Kiminobu, 5,701,976, Cl. 188-71.500.
Koenig & Bauer-Albert Aktiengesellschaft: *See—*
Mohrmann, Hans Dierk, 5,701,818, Cl. 101-375.000.
Koenig, Larry, to Jam'n Fitness Corp. Exercise apparatus. 5,702,329, Cl. 482-97.000.
Koga, Yasutaka: *See—*
Itoh, Masashi; and Koga, Yasutaka, 5,703,626, Cl. 345-173.000.
Kögel, Wolfram: *See—*
Schweinzer, Jürgen; Fischer, Joachim; De Grave, Isidoor; and Kögel, Wolfram, 5,703,135, Cl. 521-60.000.
Kohara, Hidekatsu: *See—*
Niikura, Satoshi; Suzuki, Takako; Doi, Kousuke; Kohara, Hidekatsu; and Nakayama, Toshimasa, 5,702,861, Cl. 430-191.000.
Ohno, Hayato; Nakao, Taku; Harada, Hisanobu; Hidesaka, Shinichi; Kohara, Hidekatsu; and Nakayama, Toshimasa, 5,702,862, Cl. 430-191.000.
Köhler, Wolfgang; Kral, Rudolf; and Wittchow, Eberhard, to Siemens Aktiengesellschaft. Steam generator. 5,701,850, Cl. 122-235.230.
Kohn, Joel M. Undergarment apparatus and method for reducing menstrual cramping. 5,701,608, Cl. 2-406.000.
Köhn, Uwe, to Windmöller & Hölscher. Arrangement for separating flat stacked objects. 5,702,099, Cl. 271-101.000.
Kohno, Takaki, to NEC Corporation. Semiconductor memory device with precharge time improved. 5,703,820, Cl. 365-204.000.
Kohno, Yasushi; Minami, Masayoshi; and Minamiguchi, Riichi, to Yazaki Corporation. Method for storing gel-coated seeds. 5,701,700, Cl. 47-57.600.
Kohr, William J.: *See—*
Goeddel, David V.; Kohr, William J.; Pennica, Diane; and Vehar, Gordon A., 5,702,938, Cl. 435-226.000.
Koibuchi, Ken, to Toyota Jidosha Kabushiki Kaisha. Behavior control system of vehicle distinctive of oversteered and understeered conditions. 5,702,165, Cl. 303-146.000.
Koichi Shudo: *See—*
Shudo, Koichi; Sugioka, Tatsuo; Inazu, Mizuho; Tanaka, Hideyuki; Inoue, Tsutomu; and Kitamura, Kazuyuki, 5,703,128, Cl. 514-563.000.
Koike, Nobuaki: *See—*
Suzuki, Fumio; Koike, Nobuaki; Shimada, Junichi; Nakamura, Joji; Shiozaki, Shizuo; Kitamura, Shigeto; Ichikawa, Shunji; Kase, Hiroshi; and Nonaka, Hiromi, 5,703,085, Cl. 514-263.000.
Koike, Yoshikazu: *See—*
Nagate, Takashi; Uetake, Akihito; Koike, Yoshikazu; and Tabata, Kunio, 5,703,449, Cl. 318-254.000.
Koito Manufacturing Co., Ltd.: *See—*
Kawamura, Naoshi, 5,702,173, Cl. 362-80.000.
Kojima, Akiyoshi: *See—*

Matsumoto, Takayuki; Ikeda, Tetsufumi; and Kojima, Akiyoshi, 5,702,795, Cl. 428-66.600.
Kojima, Jitsunari, to Olympus Optical Co., Ltd. Microscope system for controlling optical elements in interlock with a variation in observation conditions. 5,703,714, Cl. 359-368.000.
Kojima, Terutada: *See—*
Tajima, Ikuo; Kojima, Terutada; Anezaki, Tomoaki; and Fukuoka, Minao, 5,701,832, Cl. 112-155.000.
Kojima, Yoichi: *See—*
Kumagai, Yorinori; Kodama, Yoshihiro; Kojima, Yoichi; and Terao, Kiminobu, 5,701,976, Cl. 188-71.500.
Kojima, Yoshihiro; Yamamoto, Hiroshi; Maruno, Susumu; and Shimeki, Yasuharu, to Matsushita Electric Industrial Co., Ltd. Character recognition apparatus that subdivides a character into subregions to obtain feature vectors. 5,703,963, Cl. 382-197.000.
Koka, George; and Reed, Randy. Lawn mower with line trimmer assembly. 5,701,728, Cl. 56-12.700.
Kolberg, Janice A.; and Urdea, Michael S., to Chiron Corporation. HAV probes for use in solution phase sandwich hybridization and assays for detecting the presence of HAV. 5,702,891, Cl. 435-6.000.
Kolde, Hans-Jurgen: *See—*
Hemker, Hendrick Coenraad; Wagenvoord, Robert Johan; and Kolde, Hans-Jurgen, 5,702,912, Cl. 435-13.000.
Koloski, Timothy S.; and Vargo, Terrence G., to Integument Technologies, Inc. Transition metallohalopolymers. 5,703,173, Cl. 525-326.200.
Kolthammer, Brian W.S.: *See—*
Rosen, Robert K.; and Kolthammer, Brian W.S., 5,703,257, Cl. 556-7.000.
Kolze, Thomas J.: *See—*
Heegard, Chris; King, Andrew J.; Lovely, Sydney; and Kolze, Thomas J., 5,703,887, Cl. 371-42.000.
Komaki, Toshihiro, to Pioneer Electronic Corporation. AC plasma display including proectective layer. 5,703,437, Cl. 313-587.000.
Komamura, Takeo. Frame. 5,701,697, Cl. 40-791.000.
Komasaka, Toshio: *See—*
Mikami, Ichizou; Komasaka, Toshio; Niimi, Masahiro; and Miyamoto, Takashi, 5,704,031, Cl. 395-182.020.
Komatsu Industries Corporation: *See—*
Kawakami, Hideaki, 5,701,811, Cl. 100-50.000.
Komatsu Ltd.: *See—*
Imamura, Toshihide; Kadotani, Kanichi; Hayakashi, Bunji; Imaizumi, Hisaakira; Shakushi, Tetsuo; Matsumoto, Toshihiko; and Watanabe, Genichiro, 5,701,950, Cl. 165-222.000.
Kawakami, Hideaki, 5,701,811, Cl. 100-50.000.
Mori, Akira; Hagiwara, Shigeki; and Tanaka, Hirokazu, 5,703,709, Cl. 359-196.000.
Takano, Toshiro; and Akashi, Mitsumasa, 5,701,796, Cl. 91-512.000.
Komatsuki, Masato; Ishii, Makoto; Adachi, Yukishige; Makino, Keiichi; and Miyazaki, Shinichi, to Sumitomo Rubber Industries, Ltd. Tire including tire fabric and ply including tire fabric. 5,702,549, Cl. 152-548.000.
Komazawa, Takashi: *See—*
Yoshida, Sumio; Komazawa, Takashi; Kurihara, Kazuhiko; and Yazawa, Hiroshi, 5,702,657, Cl. 264-112.000.
Komine, Norio; Jinbo, Hiroki; Fujiwara, Seishi; and Hiraiwa, Hiroyuki, to Nikon Corporation. Silica glass member for UV-lithography, method for silica glass production, and method for silica glass member production. 5,703,712, Cl. 359-350.000.
Komiyama, Manabu; Sato, Shunichi; Sonetsuji, Noboru; Ishizaka, Tetsuo; and Yokoi, Saeko, to Fujitsu Limited. Laser diode module. 5,703,893, Cl. 372-43.000.
Komma, Yoshiaki: *See—*
Hayashi, Hideki; Mizuno, Sadao; Ito, Noboru; Urairi, Kenichiro; and Komma, Yoshiaki, 5,703,856, Cl. 369-54.000.
Komori, Yoshiyuki: *See—*
Ohmae, Tadayuki; Hisada, Haruhiko; Hosoda, Kenichi; Yoshiya, Masahide; Komori, Yoshiyuki; Yamaguchi, Noboru; Fujiki, Tohru; and Yasuda, Noriyasu, 5,703,167, Cl. 525-207.000.
Komuro, Hirokazu: *See—*
Murakami, Keiichi; Inamoto, Tadayoshi; Komuro, Hirokazu; Mashio, Hideaki; and Suzuki, Toshio, 5,703,630, Cl. 347-45.000.
Kondo, Kazuhiko: *See—*
Iwasaki, Tameo; Kondo, Kazuhiko; and Ohmizu, Hiroshi, 5,703,234, Cl. 544-50.000.
Kondo, Masahito; and Marumoto, Kyoji, to Rohm Co., Ltd. RGB encoder for converting digital signals to analog signals and activating deactivating D/A converters according to a mode signal. 5,703,993, Cl. 386-35.000.
Kondo, Syunichi: *See—*
Kunita, Kazuto; and Kondo, Syunichi, 5,703,140, Cl. 522-57.000.
Kondo, Tetsujiro, to Sony Corporation. Digital video signal coding apparatus and method, and coded video signal decoding apparatus and method. 5,703,649, Cl. 348-408.000.
Kondo, Tetsujiro; Fujimori, Yasuhiro; Takahashi, Kenji; and Kawaguchi, Kunio, to Sony Corporation. Information signal encoding system and method for adaptively encoding an information signal. 5,703,652, Cl. 348-421.000.
Kondo, Tomoyuki: *See—*
Haseba, Yasuhiro; Miyazawa, Kazutoshi; Matsui, Shuichi; Kondo, Tomoyuki; Goto, Yasuyuki; Nakagawa, Etsuo; and Sawada, Shinichi, 5,702,641, Cl. 252-299.630.
Kondoh, Reiko: *See—*
Iwasaki, Hitoshi; Ohsawa, Yuichi; Kondoh, Reiko; Hashimoto, Susumu; Sawabe, Atsuhito; Kamiguchi, Yuzo; and Sahashi, Masashi, 5,702,832, Cl. 428-611.000.
Konica Corporation: *See—*
Koyama, Mikio; Hayashi, Kenji; and Kikuchi, Tomoe, 5,702,860, Cl. 430-137.000.
König, Klaus: *See—*
Wroblowsky, Heinz-Jürgen; and König, Klaus, 5,703,260, Cl. 558-8.000.
König, Wolfgang: *See—*
Klingler, Otmar; Zoller, Gerhard; Jablonka, Bernd; Just, Melitta; Breipohl, Gerhard; Knolle, Jochen; König, Wolfgang; and Stilz, Hans Ulrich, 5,703,050, Cl. 514-18.000.
Königstein, Volker: *See—*
Meixner, Hubert; Reuther, Wolfgang; and Königstein, Volker, 5,702,517, Cl. 106-316.000.
Koninklijke PTT Nederland N.V.: *See—*
Pedersen, Jørgen Werngreen, 5,703,977, Cl. 385-28.000.
Konishi, Hiroo: *See—*
Amano, Masahiko; Watanabe, Masahiro; Konishi, Hiroo; Tanifuji, Shinya; and Nakamura, Tomoharu, 5,703,791, Cl. 364-492.000.
Konishi, Masahiro: *See—*
Sugimoto, Makoto; Musasa, Mamoru; Tanabe, Hiroyuki; and Konishi, Masahiro, 5,702,998, Cl. 501-97.000.
Kono, Yoji: *See—*
Muchi, Tsuneo; Kono, Yoji; and Shimizu, Kano, 5,702,526, Cl. 118-213.000.
Konoshima, Makiko: *See—*
Nakagawa, Akira; Morimatsu, Eishi; Konoshima, Makiko; and Matsuda, Kiichi, 5,703,704, Cl. 359-9.000.
Konta, Takeshi: *See—*
Takemoto, Norikazu; Ishizuka, Hideki; Konta, Takeshi; and Takeuchi, Kunihiro, 5,703,412, Cl. 307-10.100.
Koo, Myung-Kwon: *See—*
Park, Myung-Hyun; Koo, Myung-Kwon; and Um, Min-Sik, 5,702,569, Cl. 156-662.100.
Koosa, Richard: *See—*
Kreysler, William; Labeaque, Serge; Jordan, Kurt; Luzaich, Mark; Colombo, David; Marcus, Edward J.; and Koosa, Richard, 5,701,706, Cl. 52-169.600.
Kopin Corporation: *See—*
Vu, Duy-Pach; Dingle, Brenda; and Cheong, Ngwe, 5,702,963, Cl. 437-41.0GS.
Kopowski, Eckart: *See—*
Nagels, Hans-Otto; Schröder, Dieter; and Kopowski, Eckart, 5,702,945, Cl. 435-297.100.
Korea Spicer Corp.: *See—*
Park, Dong-suk, 5,701,984, Cl. 192-53.350.
Korea Telecommunication Authority: *See—*
Jung, Hee Young; Lee, Bhum Cheol; and Park, Kwon Chul, 5,703,882, Cl. 370-474.000.
Kim, Young Hwan, 5,703,534, Cl. 330-277.000.
Korondi, Joseph, Jr., to Uarco Incorporated. Form with selectively spaced appliance labels. 5,702,127, Cl. 283-81.000.
Körtge, Randolf: *See—*
Nied-Menninger, Thomas; Körtge, Randolf; and Denfeld, Bernd, 5,702,242, Cl. 418-150.000.
Korth, Henry F.: *See—*
Lopresti, Daniel P.; Korth, Henry F.; Sandberg, Jonathan S.; and Lipton, Richard J., 5,703,972, Cl. 382-310.000.
Korzhenkov, Petr Nikolaevich; Pyait, Jury Leonidovich; Smagin, Alexandr Semenovich; and Epshtein, Alexandr Lvovich, to Tovarischestvo S Ogranichennoi Otvetstvennostju "Konkur". Multi-beam lens antenna. 5,703,603, Cl. 343-753.000.
Koseki, Toshinori; Maeda, Kunio; and Kanno, Syoichi, to Mitsubishi Chemical Corporation. Cushioning composite molded article and a process for production thereof. 5,702,810, Cl. 428-318.800.
Kosiec, Jeannie Han: *See—*
Gillig, Steven Frederick; and Kosiec, Jeannie Han, 5,703,539, Cl. 331-16.000.
Kotecki, David Edward: *See—*
Saenger, Katherine Lynn; and Kotecki, David Edward, 5,701,647, Cl. 29-25.420.
Kotobuki & Co.,Ltd.: *See—*
Kageyama, Hidehei; Ueki, Tomiji; and Mitsuya, Yoshihide, 5,702,193, Cl. 401-65.000.
Kovacic, Stephen J.: *See—*
MacElwee, Thomas; Kovacic, Stephen J.; and Ojha, Jugnu J., 5,703,980, Cl. 385-49.000.
Koveal, Russell John: *See—*
Vanderspurt, Thomas Henry; and Koveal, Russell John, 5,703,133, Cl. 518-707.000.
Kowalak, Albert D.: *See—*
Ma, Chaoying; and Kowalak, Albert D., 5,702,836, Cl. 429-13.000.
Koyama, Mikio; Hayashi, Kenji; and Kikuchi, Tomoe, to Konica Corporation. Method for producing non-spherical particle. 5,702,860, Cl. 430-137.000.
Koyama, Seiji; Nozawa, Tohru; Terukina, Asao; and Suzuki, Yasunobu, to International Business Machines Corporation. DAC with feedback control for current source bias during non-display period. 5,703,582, Cl. 341-120.000.
Koyanagi, Hideki: *See—*

Tahara, Katsumi; Koyanagi, Hideki; Yagasaki, Yoichi; and Fujinami, Yasushi, 5,703,859, Cl. 369-84.000.
Kozakai, Motokazu; Aoyama, Kunitoshi; and Sahashi, Masahiko, to NGK Insulators, Ltd. Composite insulator-packing container and a method for packing a composite insulator. 5,702,053, Cl. 229-87.020.
Kozaki, Shuichi: *See—*
Yamada, Nobuaki; Kozaki, Shuichi; Mizobe, Hoyu; Yoshida, Masahiko; and Suzuki, Kenji, 5,702,642, Cl. 252-299.660.
Kraft Foods, Inc.: *See—*
Sipos, Stefan; and Jones, Gary V., 5,702,747, Cl. 426-422.000.
Wells, Cindie M., 5,702,743, Cl. 426-129.000.
Kraft Foods Limited: *See—*
Phillips, Michael John, 5,702,738, Cl. 426-36.000.
Kraft, Robert E.; and Syed, Asif A., to General Electric Company. Actively controlled acoustic treatment panel. 5,702,230, Cl. 415-119.000.
Krager, Jon L.: *See—*
Hanson, Marvin L.; McCoy, Richard; and Krager, Jon L., 5,702,118, Cl. 280-491.300.
Kragle, Harry A.; Stumpff, Floyd E.; and Treacy, David R., Jr., to Corning Incorporated. Honeycomb extrusion die and materials. 5,702,659, Cl. 264-177.110.
Krajci, Edward: *See—*
Gershen, Bernard; Krajci, Edward; and Neiger, Benjamin, 5,703,458, Cl. 318-799.000.
Kral, Rudolf: *See—*
Köhler, Wolfgang; Kral, Rudolf; and Wittchow, Eberhard, 5,701,850, Cl. 122-235.230.
Krattenmacher, Rolf: *See—*
Ottow, Eckhard; Schwede, Wolfgang; Halfbrodt, Wolfgang; Fritzemeier, Karl-Heinrich; and Krattenmacher, Rolf, 5,703,066, Cl. 514-173.000.
Krebs, Robert D.: *See—*
Jackson, Kenneth S.; Persons, Charles D.; Krebs, Robert D.; Price, Gregory G.; and Bales, Joel P., 5,702,388, Cl. 606-54.000.
Kretschmer, Horst: *See—*
Adamek, Wolfgang; Kretschmer, Horst; Entrup, Hubert Grosse; Nienhaus, Clemens; Herchenbach, Paul; Sarfert, Andreas; Kämpf, Klaus; and Schott, Wilhelm, 5,702,306, Cl. 464-172.000.
Kreysler, William; Labesque, Serge; Jordan, Kurt; Luzaich, Mark; Colombo, David; Marcus, Edward J.; and Koosa, Richard. Underground service bay for vehicles and process for constructing same. 5,701,706, Cl. 52-169.600.
Krieg, Kenneth R.: *See—*
Mundt, Randall S.; and Krieg, Kenneth R., 5,702,533, Cl. 118-733.000.
Kriegler, Michael; and Perez, Carl, to Chiron Corporation. Antibody methods for the treatment of a hormone-mediated disease. 5,702,705, Cl. 424-145.100.
Kristal, Phyllis K.: *See—*
Kamen, Dean L.; Ambrogi, Robert R.; Duggan, Robert J.; Heinzmann, Richard Kurt; Key, Brian R.; Skoskiewicz, Andrzej; and Kristal, Phyllis K., 5,701,965, Cl. 180-7.100.
Krodel, Elizabeth K.: *See—*
Law, Say-Jong; Jiang, Qingping; Fischer, Walter; Unger, John T.; and Krodel, Elizabeth K., 5,702,887, Cl. 435-6.000.
Krol, William P., Jr.: *See—*
Cho, Chahee Peter; and Krol, William P., Jr., 5,702,273, Cl. 440-6.000.
Kroll, William B.; and Curran, Patrick D., to Sundstrand Corporation. Deployable vortex turbine for dissipating or extracting energy from a lift induced vortex emanating from an aircraft. 5,702,071, Cl. 244-199.000.
Kronenberg, Stanley; and Brucker, George J., to United States of America, Army. Method and apparatus for measuring angular differential dose of ionizing radiation. 5,703,370, Cl. 250-376.000.
Kropf, Philipp Rolf; and Geisser, Albert. Modular hip joint prosthesis. 5,702,480, Cl. 623-23.000.
Krug International: *See—*
Simmons, Scott C.; Pohl, John R.; Guess, Terrell M.; Rushing, Douglas A.; Caputo, Michael P., Jr.; and Billica, Roger D., 5,701,904, Cl. 128-670.000.
Krutak, James J.; Cushman, Michael R.; Coates, Clarence A.; Parham, William W.; Weaver, Max A.; and Patonay, Gabor, to Eastman Chemical Company. Method for tagging thermoplastic materials with near infrared fluorophores. 5,703,229, Cl. 540-140.000.
Krutt, Hans-Jürgen: *See—*
Gerhards, Bernhard; Krutt, Hans-Jürgen; and Thissen, Wilhelm, 5,703,284, Cl. 73-146.000.
Krygowski, Matthew Anthony: *See—*
George, Jonel; Glassen, Steven Gardner; Krygowski, Matthew Anthony; Kim, Moon Ju; Preston, Allen Herman; and Sachi, David Emmett, 5,704,055, Cl. 395-402.000.
Kubo, Kazumi: *See—*
Nozaki, Nobuharu; Mitsumoto, Shinji; Kubo, Kazumi; and Kobayashi, Fumio, 5,703,900, Cl. 372-107.000.
Kubo, Kimiyo: *See—*
Asano, Kaoru; and Kubo, Kimiyo, 5,703,959, Cl. 382-133.000.
Kubo, Masumi: *See—*
Fujioka, Kazuyoshi; Kubo, Masumi; and Takafuji, Yutaka, 5,703,663, Cl. 349-5.000.
Kubomura, Kenji; Kimura, Hiromi; and Shibata, Hirotaka, to Nippon Steel Corporation; and Sakase Adteck Co. Triaxial fabric composed of carbon fiber strands and method for production thereof. 5,702,993, Cl. 442-204.000.
Kubota, Hideyuki, to Tomoegawa Paper Co., Ltd. Electrophotographic toner and process for the production thereof. 5,702,859, Cl. 430-110.000.
Kubota, Ken, to JH Corporation. Vacuum carburizing method and device, and carburized products. 5,702,540, Cl. 148-223.000.
Kubota, Masayuki: *See—*
Esaki, Toshiro; and Kubota, Masayuki, 5,701,663, Cl. 29-783.000.
Kubota, Toshihiro, to Hitachi Electronics Engineering Co., Ltd. Gravitational IC package transfer mechanism. 5,702,224, Cl. 414-403.000.
Kuczynski, Anthony L.: *See—*
Merrill, Sonya; Ayer, Atul Devdatt; Chadha, Navjot; and Kuczynski, Anthony L., 5,702,725, Cl. 424-472.000.
Kuebler, Markus; and Hofmann, Peter, to Dr. Ing. h.c.F. Porsche AG. Elastic sealing foil. 5,702,785, Cl. 428-35.200.
Kuehn, Eberhard: *See—*
Sezi, Recai; Borndoerfer, Horst; Ahne, Hellmut; Birkle, Siegfried; Kuehn, Eberhard; Leuschner, Rainer; Rissel, Eva; and Sebald, Michael, 5,703,186, Cl. 526-272.000.
Kuenzel, Wilhelm: *See—*
Kishi, Sohtaroh; Shiba, Yoshio; Miyake, Hidekazu; and Kuenzel, Wilhelm, 5,702,748, Cl. 426-478.000.
Kuesell, Matthias; Duell, Andreas; Bender, Karl; and Borchert, Kay, to Robert Bosch GmbH. Pressure sensor for pressure detection in combustion chamber of internal combustion engine. 5,703,282, Cl. 73-115.000.
Kuga, Kaeko, to Rohm Co., Ltd. Signal processing circuit. 5,703,608, Cl. 345-99.000.
Kugai, Nasami: *See—*
Niki, Toru; Kugai, Nasami; and Nakatsuka, Tadanori, 5,703,962, Cl. 382-173.000.
Kugiya, Fumio: *See—*
Kirino, Fumiyoshi; Toda, Tsuyoshi; Ide, Horishi; Sugiyama, Hisataka; Saito, Atsushi; Tsuchinaga, Hiroyuki; Maeda, Takeshi; Kugiya, Fumio; Kaku, Toshimitsu; Mita, Seiichi; Shigematsu, Kazuo; and Ouchi, Yasuhide, 5,703,855, Cl. 369-54.000.
Kugler, Martin: *See—*
Heuer, Lutz; Wachtler, Peter; Kugler, Martin; Schrage, Heinrich; and Sasse, Klaus. 5,703,103, Cl. 514-365.000.
Kuhara, Shigeru; and Toyoshima, Hideo, to NEC Corporation. High-speed semiconductor memory system. 5,703,815, Cl. 365-194.000.
Kuhn, Helmut: *See—*
Hell, Erich; Kuhn, Helmut; and Hoernig, Mathias, 5,703,924, Cl. 378-136.000.
Kujawski, Rick A., to Bundy Corporation. Wire harness conduit and tube bundle. 5,703,330, Cl. 174-72.00A.
Kuk, Donald W.: *See—*
Kachmarik, David J.; Soules, Thomas F.; Fillion, Raymond A.; Steinbrenner, Erwin G.; and Kuk, Donald W., 5,703,440, Cl. 315-56.000.
Kukiatsakulchai, Kata: *See—*
Notohamiprodjo, Hubertus; and Kukiatsakulchai, Kata, 5,703,442, Cl. 315-307.000.
Kuk-Nagle, Karen T.: *See—*
Arts, Gene H.; Carr, Jan E.; Kuk-Nagle, Karen T.; Lontine, Michael D.; and Millberg, Brian A., 5,702,387, Cl. 606-45.000.
Kulisz, Andre A.; and Migachyov, Valery, to HK Medical Technologies Incorporated. Intraurethral bladder control device with retainer apparatus. 5,701,916, Cl. 128-885.000.
Kulite Semiconductor Products, Inc.: *See—*
Kurtz, Anthony D.; Bemis, Andrew V.; Nunn, Timothy A.; and Ned, Alexander A., 5,702,619, Cl. 216-2.000.
Kumagai, Eiji, to Sony Corporation. Optical disk reproducing apparatus having a cosine equalizer with boosted frequency characteristics. 5,703,852, Cl. 369-48.000.
Kumagai, Hiroki; and Fukazawa, Fumio, to Bridgestone Sports Co., Ltd. Method and apparatus for inspecting the outer appearance of a spherical article. 5,703,687, Cl. 356-426.000.
Kumagai, Ryo: *See—*
Arai, Youichi; O'Toole, Brendan; Saigo, Tsutomu; Shimoyama, Kenichi; Kumagai, Ryo; and Takada, Yoshihide, 5,703,486, Cl. 324-427.000.
Kumagai, Yorinori; Kodama, Yoshihiro; Kojima, Yoichi; and Terao, Kiminobu, to Honda Giken Kogyo Kabushiki Kaisha. Hydraulic brake for transmission. 5,701,976, Cl. 188-71.500.
Kumakura, Atsushi: *See—*
Hayafune, Hiroshi; and Kumakura, Atsushi, 5,702,318, Cl. 474-111.000.
Kumar, G. Kris: *See—*
Burke, Dennis W.; Kumar, G. Kris; and Kitch, Steven C., 5,702,485, Cl. 623-23.000.
Kumar, Nalin; and Xie, Chenggang, to Microelectronics & Computer Technology Corp. Diamond film flat field emission cathode. 5,703,435, Cl. 313-495.000.
Kumar, Rajagopalan A.: *See—*
Lowndes, Douglas H.; Pedraza, Anthony J.; DeSilva, Melvin J.; and Kumar, Rajagopalan A., 5,703,341, Cl. 219-121.660.
Kundrat, David M.; Smillie, Allan M.; and Sussman, Richard C., to Armco Inc. Method for direct use of chromite ore in the production of stainless steel. 5,702,502, Cl. 75-501.000.
Künemund, Thomas; and Hentschel, Klaus, to Siemens Aktiengesellschaft. Arrangement for rule decoding and evaluation for a high-resolution fuzzy inference processor. 5,704,010, Cl. 395-3.000.
Kunieda, Yoshinori: *See—*
Yamamoto, Yuuri; Takahashi, Kenichi; Ohnishi, Hiroshi; Kunieda, Yoshinori; and Matsubara, Naoki, 5,703,913, Cl. 375-354.000.
Kunihara, Mineo: *See—*

Itoh, Noriie; Kunihara, Mineo; Kushida, Hiroshi; McWhorter, William W.; Nomura, Syunji; Ozawa, Kazunori; Taniguchi, Mikio; and Tsuzuki, Kazuo, 5,703,071, Cl. 514-218.000.
Kunita, Kazuto; and Kondo, Syunichi, to Fuji Photo Film Co., Ltd. Photopolymerizable composition. 5,703,140, Cl. 522-57.000.
Kunka, Blair S.: *See—*
Vandenbergh, Peter A.; Walker, Shirley A.; and Kunka, Blair S., 5,702,923, Cl. 435-71.300.
Kunzmann, Brendan W.: *See—*
Schank, Richard L.; Renfer, Dale S.; Limburg, William W.; Kunzmann, Brendan W.; and Pai, Damodar M., 5,702,854, Cl. 430-59.000.
Kuo, Chin Song. Umbrella rod structure of multiple tubes. 5,702,198, Cl. 403-377.000.
Kuo, Chin-Chuan: *See—*
Liao, Ching-Wen; Kuo, Chin-Chuan; Peng, Chi-Kang; and Lin, Tsun-Ching, 5,702,624, Cl. 219-497.000.
Kupczik, Günter: *See—*
Friederich, Hans-Werner; and Kupczik, Günter, 5,702,132, Cl. 285-235.000.
Kurakake, Yasushi; and Mizuno, Shigehiko, to Yamaha Corporation. Automatic performance data processing system with judging CPU operation-capacity. 5,703,310, Cl. 84-609.000.
Kuramashi, Koji: *See—*
Nagai, Takashi; Honda, Nobuyasu; Iida, Tomohide; Akiyama, Toshiaki; Kuramashi, Koji; and Toda, Asao, 5,702,857, Cl. 430-101.000.
Kuran, Christopher G.; Valley, Harold John; and Hayes, Raymond Eugene, to V. A. Butler, Inc. Rotary diverter valve. 5,701,934, Cl. 137-625.460.
Kuraray Co. Ltd.: *See—*
Jester, Randy Douglas; Penoyer, John Arthur; Roth, Douglas Duane; Frank, Detlef; Onodera, Minoru; Tsudaka, Takeichi; Sato, Toshiaki; and Moritani, Tohei, 5,703,202, Cl. 528-481.000.
Kureha Kagaku Kogyo Kabushiki Kaisha: *See—*
Matsunaga, Satoru; Hino, Masayuki; and Teramoto, Yosikiti, 5,702,824, Cl. 428-500.000.
Kurihara, Katsumi; Kawamoto, Shiro; Nemazi, John E.; and Conger, William G., to Ryobi Limited. Cartridge fuel internal combustion engine. 5,701,855, Cl. 123-73.0AD.
Kurihara, Kazuhiko: *See—*
Yoshida, Sumio; Komazawa, Takashi; Kurihara, Kazuhiko; and Yazawa, Hiroshi, 5,702,657, Cl. 264-112.000.
Kurihara, Kenichi, to NEC Corporation. Plastic encapsulated semiconductor device having wing leads. 5,703,396, Cl. 257-692.000.
Kurimoto, Eiji: *See—*
Ikegami, Takaaki; Rokutanzono, Takashi; and Kurimoto, Eiji, 5,702,855, Cl. 430-83.000.
Kurita, Mitsuru: *See—*
Ikeda, Yoshinori; Ichikawa, Hiroyuki; Kurita, Mitsuru; Hayashi, Kimiyoshi; Honma, Toshio; and Horie, Yoshiko, 5,703,694, Cl. 358-296.000.
Kuroda, Hirokazu; and Ando, Ryo, to Sony Corporation. Disc recording/reproduction apparatus and method for resetting an address control circuit to maximize an address margin of the memory. 5,703,854, Cl. 369-50.000.
Kuroda, Tokuyuki: *See—*
Nakakura, Masashi; Ueno, Yuji; Hayakawa, Eiji; and Kuroda, Tokuyuki, 5,703,080, Cl. 514-253.000.
Kuroe, Shinichiro, to Advantest Corporation. Timing calibration circuit and method for test signals. 5,703,489, Cl. 324-601.000.
Kurtz, Anthony D.; Bemis, Andrew V.; Nunn, Timothy A.; and Ned, Alexander A., to Kulite Semiconductor Products, Inc. Method for fabricating a high pressure piezoresistive transducer. 5,702,619, Cl. 216-2.000.
Kurtz, Robert J.; and Fuller, William D., to Bioresearch, Inc. Flavone taste modifiers. 5,703,053, Cl. 514-27.000.
Kurucz, Frank Anthony: *See—*
Smith, Thomas G.; Winter, Kirt Alan; and Kurucz, Frank Anthony, 5,704,021, Cl. 395-109.000.
Kusano, Takahiro, to Kabushiki Kaisha Toshiba. Filter circuit. 5,703,523, Cl. 327-553.000.
Kush, Donald C., to Kaiser Aluminum & Chemical Corporation. Method for removing liquid edge bead. 5,702,537, Cl. 134-15.000.
Kushida, Hiroshi: *See—*
Itoh, Noriie; Kunihara, Mineo; Kushida, Hiroshi; McWhorter, William W.; Nomura, Syunji; Ozawa, Kazunori; Taniguchi, Mikio; and Tsuzuki, Kazuo, 5,703,071, Cl. 514-218.000.
Kustermann, Martin, to J.M. Voith GmbH. Process for coating running webs. 5,702,760, Cl. 427-172.000.
Kutchmarek, Darrell J.; and Stauffacher, James H., to Springs Window Fashions Division, Inc. Method for making a pleated expandable cellular product for window coverings. 5,702,552, Cl. 156-197.000.
Kuwahara, Yasuhiro; Yamashita, Haruo; and Fukushima, Tsumoru, to Matsushita Electric Industrial Co., Ltd. Method and apparatus for detecting interpolation line. 5,703,968, Cl. 382-269.000.
Kuzuya, Yasuhisa: *See—*
Goto, Shinichi; Kobayashi, Masao; Kuzuya, Yasuhisa; and Ichikawa, Hidehito, 5,702,782, Cl. 428-31.000.
Kverneland Klepp AS: *See—*
Skjaeveland, Magne; and Stangeland, Kjell-Egil, 5,701,960, Cl. 172-219.000.
Kwon, Joong-Yeol, to SamSung Electronics Co., Ltd. Horizontal deflection output circuit. 5,703,443, Cl. 315-370.000.
Kwon, Ki Jo, to Goldstar Electron Co., Ltd. Signal reception apparatus having automatic level selection function. 5,703,505, Cl. 327-75.000.
Kwon, Yong Don: *See—*
Lee, Seong Sam; and Kwon, Yong Don, 5,703,886, Cl. 371-37.100.
Kwong, Louis M. Debris isolating prosthetic hip joint. 5,702,483, Cl. 623-23.000.
Kyle, Richard F.: *See—*
Thongpreda, Nisra; Hori, Roy Y.; and Kyle, Richard F., 5,702,482, Cl. 623-23.000.
Kyle, Richard Frank: *See—*
Craig, Edward Vincent; Kyle, Richard Frank; and Straight, Christopher Bryan, 5,702,486, Cl. 623-23.000.
Kyowa Hakko Kogyo Co., Ltd.: *See—*
Nakakura, Masashi; Ueno, Yuji; Hayakawa, Eiji; and Kuroda, Tokuyuki, 5,703,080, Cl. 514-253.000.
Suzuki, Fumio; Koike, Nobuaki; Shimada, Junichi; Nakamura, Joji; Shiozaki, Shizuo; Kitamura, Shigeto; Ichikawa, Shunji; Kase, Hiroshi; and Nonaka, Hiromi, 5,703,085, Cl. 514-263.000.
LaBell, Larry: *See—*
Moradi, Mohammad A.; Rossman, Michael D.; LaBell, Larry; and Holz, Bonita, 5,703,796, Cl. 364-563.000.
Labesque, Serge: *See—*
Kreysler, William; Labesque, Serge; Jordan, Kurt; Luzaich, Mark; Colombo, David; Marcus, Edward J.; and Koosa, Richard, 5,701,706, Cl. 52-169.600.
Laboratories Goemar S.A.: *See—*
Yvin, Jean-Claude; and Coste, Christian, 5,703,009, Cl. 504-116.000.
Lackey, Jennifer J.; Pothier, Albert J.; Carls, Thomas A.; Johnson, Chris E.; and Elliott, Scott, to Smith & Nephew Inc. Modular trial tibial insert. 5,702,464, Cl. 623-20.000.
Lacour, Olivier: *See—*
Feral, Thierry; Fromont, Bernard; Stephan, Ronan; Sernit, Eric; and Lacour, Olivier, 5,703,425, Cl. 310-366.000.
LaFleur, Arthur E.; and LaFleur, Lee, to Custom Packaging Systems, Inc. Tools for inserting and removing liner outlet spouts. 5,701,650, Cl. 29-267.000.
LaFleur, Lee: *See—*
LaFleur, Arthur E.; and LaFleur, Lee, 5,701,650, Cl. 29-267.000.
Lafontaine, Daniel M., to Scimed Life Systems, Inc. Curved bristle atherectomy device and method. 5,702,413, Cl. 606-159.000.
Lagrange, Alain; Vandenbossche, Jean Jacques; Cotteret, Jean; and Audousset, Marie Pascale, to L'Oreal. 3-substituted para-aminophenols. 5,703,266, Cl. 558-408.000.
Lahtenkorva, Kimmo: *See—*
Ehret, Philippe; Guipouy, Philippe; and Lahtenkorva, Kimmo, 5,702,826, Cl. 428-515.000.
Lahue, Robert S.: *See—*
Modrich, Paul L.; Su, Shin-San; Au, Karin G.; Lahue, Robert S.; Cooper, Deani Lee; and Worth, Leroy, Jr., 5,702,894, Cl. 435-6.000.
Lai, Chane-Yu: *See—*
Shih, Tung-Sheng; Yeh, Wen-Yu; Chen, Chih-Chieh; and Lai, Chane-Yu, 5,702,506, Cl. 95-287.000.
Lai, Hu-Kong: *See—*
Chu, Edwin; and Lai, Hu-Kong, 5,703,402, Cl. 257-737.000.
Lai, Shiang-Hwey. Pneumatic cylinder of a pneumatic lever-lift chair, and its assembly process. 5,702,083, Cl. 248-404.000.
Lai, Wayne C.: *See—*
Johnston, Stephen A.; Barry, Michael A.; and Lai, Wayne C., 5,703,057, Cl. 514-44.000.
Laine, Aire Maria: *See—*
Karjalainen, Arto Johannes; Södervall, Maria-Liisa; Kalapudas, Arja Marketta; Pelkonen, Reino Olavi; Laine, Aire Maria; Lammintausta, Risto Arvo Sakari; and Salonen, Jarmo Sakari, 5,703,109, Cl. 514-383.000.
L'Air Liquide: *See—*
Cieutat, Denis; and Schmidt, Emmanuel, 5,702,678, Cl. 423-567.100.
L'Air Liquide, Societe Anonyme pour L'Etude et L'Exploitation des Procedes Georges Claude: *See—*
Kato, Toshiro, 5,702,655, Cl. 264-85.000.
Lam Research Corporation: *See—*
Mundt, Randall S.; and Krieg, Kenneth R., 5,702,533, Cl. 118-733.000.
Lambert, James F.: *See—*
Arfaei, Ahmad; and Lambert, James F., 5,703,174, Cl. 525-329.900.
Lamm, Joe; and Gilbert, Carl, to Tech-Source Inc. High-speed multiplexed digital-to -analog converter. 5,703,585, Cl. 341-141.000.
Lammintausta, Risto Arvo Sakari: *See—*
Karjalainen, Arto Johannes; Södervall, Maria-Liisa; Kalapudas, Arja Marketta; Pelkonen, Reino Olavi; Laine, Aire Maria; Lammintausta, Risto Arvo Sakari; and Salonen, Jarmo Sakari, 5,703,109, Cl. 514-383.000.
Lamprecht, Stefan: *See—*
Limacher, Urs; and Lamprecht, Stefan, 5,702,476, Cl. 623-22.000.
Land Resource Associates: *See—*
Davis, Richard L.; and Balch, Philip G., 5,701,705, Cl. 52-68.000.
Landauer, Thomas K.: *See—*
Corey, Douglas Arthur; Landauer, Thomas K.; and Wonsiewicz, Bud C., 5,703,655, Cl. 348-468.000.
Landes, Albert, to Mero-Raustuktur GmbH & Co. Dock device, particularly for maintaining and overhauling aircraft. 5,701,704, Cl. 52-64.000.
Landi, Curtis L.; and Wilson, Susan L., to Supracor Systems Corporation. Liner for overlaying a mattress. 5,701,621, Cl. 5-691.000.
Landon, Steve: *See—*

Brownmiller, Curtis; Bencheck, Mike; Tran, Minh; Branton, Robert; DeMoss, Mark; and Landon, Steve, 5,704,036, Cl. 395-183.190.
Lane, Brian W.: *See—*
Appleford, David E.; Lane, Brian W.; and Webb, Alan D., 5,701,614, Cl. 4-555.000.
Lane, David Philip: *See—*
Picksley, Steven Michael; and Lane, David Philip, 5,702,908, Cl. 435-7.800.
Lane, Miriam Weiss: *See—*
Lane, Ronald S.; and Lane, Miriam Weiss, 5,704,051, Cl. 395-357.000.
Lane, Ronald S.; and Lane, Miriam Weiss. Hierarchical menu bar system with dynamic graphics and text windows. 5,704,051, Cl. 395-357.000.
Langberg, Ehud, to Globespan Technologies, Inc. Impulse noise effect reduction. 5,703,904, Cl. 375-232.000.
Langberg, Ehud, to Globespan Technologies, Inc. Multi-channel timing recovery system. 5,703.905, Cl. 375-232.000.
Langen, Hans: *See—*
Odenwälder, Heinrich; Langen, Hans; Dahlhaus, Uwe; and Schütz, Heinz-Dieter, 5,702,877, Cl. 430-551.000.
Langen, Joseph W.: *See—*
Shipston, Adele C.; Langen, Joseph W.; and Mitchell, Nancy G., 5,702,771, Cl. 427-491.000.
Langstein, Gerhard; Bochmann, Manfred; and Dawson, David M., to Bayer AG. Process for the production of polyisoolefins by means of novel metallocene type initiator systems. 5,703,182, Cl. 526-185.000.
Laou, Philips: *See—*
Shih, Ishiang; Phong, Linh Ngo; Qiu, Cindy Xing; and Laou, Philips, 5,703,357, Cl. 250-226.000.
Laparra, Olivier F.: *See—*
Gabriel, Calvin T.; and Laparra, Olivier F., 5,702,978, Cl. 437-65.000.
Laplante, Alvin A. Mechanism to convert angular reciprocal movements into intermittent unidirectional rotary movement. 5,701,784, Cl. 74-126.000.
Lapresle, Philippe: *See—*
Henry, Patrick; Lapresle, Philippe; and Missenard, Gilles, 5,702,394, Cl. 600-61.000.
Larami Limited: *See—*
Watson, Daniel M., Jr.; Mednick, Melvin; and McKeon, Thomas M., 5,702,283, Cl. 446-397.000.
Larsen, Randi Bollerup. Drinking mug. 5,702,020, Cl. 220-709.000.
Larsen, Samuel D.: *See—*
Bunnell, Charles A.; Hotten, Terrence Michael; Larsen, Samuel D.; and Tupper, David Edward, 5,703,232, Cl. 540-557.000.
Larson, Carl O., Jr.; Smith, James S.; Chapman, John H.; Slimon, Scot A.; John, Trahan D.; Robert, J. Brozek; Franco, Alberto; McGarvey, John J.; Rosen, Marvin E.; and Pasque, Michael K., to Electric Boat Corporation. Surgically implantable power supply. 5,702,430, Cl. 607-1.000.
Larson, Richard I.; Selby, Stephen E.; and Enger, Michael P., to General Electric Company. Production method for obtaining pressable powder yielding high sinter density pellets without defects. 5,702,676, Cl. 423-261.000.
Larue, Ross Carson. Sewage sludge compost battery. 5,702,835, Cl. 429-2.000.
Laser Technology, Inc.: *See—*
Dunne, Jeremy G., 5,703,678, Cl. 356-5.050.
Lassalle, Martine: *See—*
Merle, Jean-Pierre; Lassalle, Martine; Bernoux, Franck; and Adda, Maurice, 5,703,643, Cl. 348-341.000.
Latex Foam Products, Inc.: *See—*
May, Jonathan J., 5,701,623, Cl. 5-739.000.
Latzgo, Philip F.: *See—*
Taylor, Kevin; Latzgo, Philip F.; and Lenihan, Timothy J., 5,702,433, Cl. 607-101.000.
Lau, Daniel T.: *See—*
Javery, Robert P.; Lau, Daniel T.; Wright, James B.; and Poleschuk, Leroy A., 5,701,660, Cl. 29-622.000.
Lau, Ronnie C.: *See—*
Crane, Patrick E.; and Lau, Ronnie C., 5,703,702, Cl. 359-1.000.
Laue, Bridget E.: *See—*
Roberts, Walden K.; Selitrennikoff, Claude P.; Laue, Bridget E.; and Potter, Sharon L., 5,703,044, Cl. 514-12.000.
Laurençon, Michel: *See—*
Hummer, Jacques; Dive, Michel; Laurençon, Michel; and Clauze, Jacques, 5,702,459, Cl. 623-20.000.
Lavielle, Gilbert; Muller, Olivier; Millan, Mark; and Audinot, Valérie, to Adir et Compagnie. Indole, indazole and benzisoxazole compounds. 5,703,070, Cl. 514-212.000.
LaViolette, William P.: *See—*
Yishay, Oded; LaViolette, William P.; and Bechonis, Daniel W., 5,704,039, Cl. 395-186.000.
Law, Say-Jong; Jiang, Qingping; Fischer, Walter; Unger, John T.; and Krodel, Elizabeth K., to Chiron Diagnostics Corporation. Long emission wavelength chemiluminescent compounds and their use in test assays. 5,702,887, Cl. 435-6.000.
Lawrence, Dale M.: *See—*
Saaski, Elric W.; and Lawrence, Dale M., 5,702,618, Cl. 216-2.000.
Lawson, David M. On-site automated closed loop petroleum based hydrocarbon fluid filtration and recycling system. 5,702,607, Cl. 210-663.000.
Lawson, James P.: *See—*
Walker, Jerry L.; Lawson, James P.; and Gill, Bennie C., 5,701,964, Cl. 175-4.600.
Lawson, John A.; Morrison, W. Andrew; and Savoie, Rob E., to Telesensory Corporation. Zoom lens and magnifier utilizing the same. 5,703,727, Cl. 359-802.000.
Lazides, Gus. Pet mobile. 5,701,843, Cl. 119-496.000.
Lazzara, Richard J.; and Beaty, Keith D. Dental implant fixture for anchorage in cortcal bone. 5,702,346, Cl. 433-173.000.
Le, Son Minh: *See—*
Finnicum, Douglas Scott; Finucane, Lawrence J.; Peters, Jack Duane; and Le, Son Minh, 5,702,524, Cl. 118-200.000.
Leach, Michael A. Block for polishing a wafer during menufacture of integrated circuits. 5,702,290, Cl. 451-41.000.
Leander, J. David: *See—*
Foreman, Mark M.; and Leander, J. David, 5,703,112, Cl. 514-411.000.
Lear Corporation: *See—*
Stewart, Robert A., 5,703,303, Cl. 73-866.400.
Lear Seating Corporation: *See—*
Fowler, Thomas J.; and Rus, Liviu, 5,702,145, Cl. 296-66.000.
Leathers, Timothy D.; Hayman, G. Thomas; and Cote, Gregory L., to United States of America, Agriculture. Microorganism strains that produce a high proportion of alternan to dextran. 5,702,942, Cl. 435-252.900.
Le Baut, Guillaume: *See—*
Durand, Ludovic; Babingui, Jean-Paul; Moulin, Claudie; Robert-Piessard, Sylvie; Le Baut, Guillaume; Scalbert, Elisabeth; Caignard, Daniel-Henri; and Renard, Pierre, 5,703,118, Cl. 514-456.000.
Lebby, Michael S.: *See—*
Jachimowicz, Karen E.; Kelly, George R.; and Lebby, Michael S., 5,703,664, Cl. 349-58.000.
Le Bec, Christine: *See—*
Wickstrom, Eric; and Le Bec, Christine, 5,703,223, Cl. 536-25.330.
Le Buzit, Gérard: *See—*
Foos, Jacques; Guy, Alain; Lemaire, Marc; Leclere, Bruno; Le Buzit, Gérard; and Doutreluingne, Pierre, 5,702,608, Cl. 210-668.000.
Lecerf, André: *See—*
Bernard, Patrick; Lecerf, André; Senyarich, Stéphane; and Audry, Claudette, 5,702,844, Cl. 429-223.000.
Leclere, Bruno: *See—*
Foos, Jacques; Guy, Alain; Lemaire, Marc; Leclere, Bruno; Le Buzit, Gérard; and Doutreluingne, Pierre, 5,702,608, Cl. 210-668.000.
LeCroy Corporation: *See—*
Gorbics, Mark S.; Roberts, Keith M.; and Sumner, Richard L., 5,703,838, Cl. 368-120.000.
Lee, Adam T.; Wu, Kuang; and Burton, Larry, to Koch Enterprises, Inc. Multiple downcomer high performance tray assembly. 5,702,647, Cl. 261-114.500.
Lee, Alan. Golf training device. 5,702,309, Cl. 473-235.000.
Lee, Bhum Cheol: *See—*
Jung, Hee Young; Lee, Bhum Cheol; and Park, Kwon Chul, 5,703,882, Cl. 370-474.000.
Lee, Byung H.; and Clothier, Michael F., to Pharmacia & Upjohn Company. Antiparasitic marcfortines and paraherquamides. 5,703,078, Cl. 514-250.000.
Lee, Byung-Il, to LG Semicon, Co., Ltd. Method for forming a semiconductor device having a floating gate. 5,702,964, Cl. 437-43.000.
Lee, Chi-Jung. Abdomen fitness equipment. 5,702,334, Cl. 482-140.000.
Lee, Chiu-Shan. Safety socket and plug arrangement. 5,702,259, Cl. 439-137.000.
Lee, Choon Sae: *See—*
Nalbandian, Vahakn; and Lee, Choon Sae, 5,703,601, Cl. 343-700.0MS.
Lee, Chul-woo; and Yoo, Jang-hoon, to Samsung Electronics Co., Ltd. Dual focus objective lens with two curvatures for focussing light on two different kinds of disks with different thicknesses. 5,703,862, Cl. 369-112.000.
Lee, Chung-Kuang; Hsu, Jung-Hsien; and Tseng, Pin-Nan, to Taiwan Semiconductor Manufacturing Company, Ltd. Method for making metal contacts and interconnections concurrently on semiconductor integrated circuits. 5,702,982, Cl. 437-195.000.
Lee, Doo Hee; and Yang, Tae Seok, to LG Electronics Inc. Index processor for digital VCR and method therefor. 5,703,994, Cl. 386-52.000.
Lee, Edmond Mun Hang. Process of laminating gold foil and gold foil card. 5,702,554, Cl. 156-219.000.
Lee, Haeng-Woo: *See—*
Kim, Sang-Keun; Kim, Seoung-Ho; Lee, Haeng-Woo; Choi, Cheol-Kyu; Kim, Jeong-Deuk; Hong, Jin-Who; Kim, Chang-Soo; and Whang, Kong-Hyun, 5,703,139, Cl. 522-42.000.
Kim, Sang-Keun; Lee, Haeng-Woo; Choi, Cheol-Kyu; Kim, Jeong-Deuk; Hong, Jin-Who; Kim, Chang-Soo; and Whang, Kong-Hyun, 5,703,142, Cl. 522-90.000.
Lee, Hee Yoon: *See—*
Aggarwal, Varinder Kumar; Abdel-Rahman, Hesham Nimer Hasan; and Lee, Hee Yoon, 5,703,246, Cl. 548-955.000.
Lee, Ho-Cheol: *See—*
Park, Churoo; Jang, Hyun-Soon; Kim, Chull-Soo; Kim, Myung-Ho; Lee, Seung-Hun; Lee, Si-Yeol; Lee, Ho-Cheol; Kim, Tae-Jin; and Choi, Yun-Ho, 5,703,828, Cl. 365-230.030.
Lee, Hsing-Chung: *See—*
Wei, Chengping; Shi, Song Q.; and Lee, Hsing-Chung, 5,703,394, Cl. 257-433.000.
Lee, James Michael, to Lockheed Martin Corporation. Information kiosks. 5,702,166, Cl. 312-107.000.
Lee, Jin-Hee: *See—*
Yoon, Hyung-Sup; Lee, Jin-Hee; Park, Chul-Sun; and Pyun, Kwang-Eui, 5,702,975, Cl. 437-61.000.

Lee, John Howard: *See—*
Rettker, James Palmer; Peterson, William Edward; Chandler, Philip Bonn; and Lee, John Howard, 5,702,802, Cl. 428-192.000.
Lee, Jong-Chan, to Samsung Electronics Co., Ltd. Cassette housing assembly of a tape recorder having a phase difference corrector. 5,702,064, Cl. 242-338.400.
Lee, Kang-yoon, to Samsung Electronics Co., Ltd. Buried bit line DRAM cells and fabricating methods therefor. 5,702,969, Cl. 437-52.000.
Lee, Kyu-Chan; and Sim, Jai-Hoon, to Samsung Electronics Co., Ltd. Reference voltage generator with fast start-up and low stand-by power. 5,703,475, Cl. 323-313.000.
Lee, Seong Sam; and Kwon, Yong Don, to Hyundai Electronics Industries Co., Ltd. Error detecting apparatus for packet exchange. 5,703,886, Cl. 371-37.100.
Lee, Seung-Hun: *See—*
Park, Churoo; Jang, Hyun-Soon; Kim, Chull-Soo; Kim, Myung-Ho; Lee, Seung-Hun; Lee, Si-Yeol; Lee, Ho-Cheol; Kim, Tae-Jin; and Choi, Yun-Ho, 5,703,828, Cl. 365-230.030.
Lee, Shih-Jen E.: *See—*
Dutton, Christopher J.; Gibson, Stephen P.; and Lee, Shih-Jen E., 5,702,924, Cl. 435-78.000.
Lee, Si-Yeol: *See—*
Park, Churoo; Jang, Hyun-Soon; Kim, Chull-Soo; Kim, Myung-Ho; Lee, Seung-Hun; Lee, Si-Yeol; Lee, Ho-Cheol; Kim, Tae-Jin; and Choi, Yun-Ho, 5,703,828, Cl. 365-230.030.
Lee, Tony J., to Schweitzer Engineering Laboratories, Inc. Two terminal active arc suppressor. 5,703,743, Cl. 361-6.000.
Lee, Won Ki, to Daewoo Heavy Industries Ltd. Power supply device for an electromotive railcar. 5,701,980, Cl. 191-4.000.
Lee, Yong Suk: *See—*
Kim, Su Ung; Kim, Dong Yeon; Chung, Gi ju; Hong, Sung Kol; Park, Sung Jun; Nam, Sang Hoon; and Lee, Yong Suk, 5,703,097, Cl. 514-338.000.
Lee, Young-sik: *See—*
Kim, Yong-ho; Lee, Young-sik; and Chun, Hee, 5,703,750, Cl. 361-187.000.
Leeker, Jerald W.: *See—*
Rodabaugh, Ronald D.; and Leeker, Jerald W., 5,702,534, Cl. 134-7.000.
Lefebvre, Bruno; Jacquet, René; and Quentric, Jean-François, to Valeo Equipements Electriquest Moteur. Starter contactor having an electronic control circuit, and a vehicle starter having such a contactor. 5,703,551, Cl. 335-126.000.
Legay, Thierry; Bonnet, Jean-Luc; and Geroux, Laurence, to ELA Medical S.A. Method and apparatus for controlling the change of an escape interval in an active implantable medical device. 5,702,424, Cl. 607-9.000.
Legrand, Annie Francoise Armande: *See—*
Tixier, Jean-Pierre; and Legrand, Annie Francoise Armande, 5,702,809, Cl. 428-216.000.
Le Grice, Stuart: *See—*
Bannwarth, Wilhelm; Caspers, Patrick; Le Grice, Stuart; and Mous, Jan, 5,702,918, Cl. 435-69.300.
Lehman, Gaye K.: *See—*
Eisele, John F.; Mikelsons, Valdis; Lehman, Gaye K.; Wang, Paul J.; and Brandt, Patricia J. A., 5,702,803, Cl. 428-195.000.
Lehrman, David, to Lehrman, David. Automatically collapsible support for an electrical cord for use with an ironing board. 5,702,075, Cl. 248-51.000.
Leibowitz, Steven H.: *See—*
Wu, Gary C.; Pawar, Chandra S.; Leibowitz, Steven H.; Pullin, Edward J.; Hazzard, Michael J.; and Duggan, Joseph C., 5,704,052, Cl. 395-380.000.
Leica Mikroskopie und Systeme GmbH: *See—*
Gaul, Norbert, 5,703,715, Cl. 359-392.000.
Leicht, Helmut Walter. Device for moving an object by means of thermal change in shape or volume. 5,702,051, Cl. 228-234.200.
Leland Stanford Junior University, The Board of Trustees of the: *See—*
Pierce, John R.; and Van Duyne, Scott A., 5,703,313, Cl. 84-622.000.
Leloup, Yves A.: *See—*
Levilly, Philippe; and Leloup, Yves A., 5,703,317, Cl. 89-37.030.
Lemaire, Marc: *See—*
Foos, Jacques; Guy, Alain; Lemaire, Marc; Leclere, Bruno; Le Buzit, Gérard; and Doutreluingne, Pierre, 5,702,608, Cl. 210-668.000.
Lemon, John; and Walthall, Kenneth. Magnetic filter. 5,702,598, Cl. 210-223.000.
Lenihan, Timothy J.: *See—*
Taylor, Kevin; Latzgo, Philip F.; and Lenihan, Timothy J., 5,702,433, Cl. 607-101.000.
Lenzi, Serge Claude, to Eurocopter France. Device for illuminating a set of equipment items which are mounted on a common support. 5,702,171, Cl. 362-29.000.
Leonard, Robert Gary: *See—*
Raissyan, Anousheh; Wood, Kody Raymond; Jacobi, Michael Joseph; King, Linda S.; Seydel, Lee Chopek; Torbert, Michele Pauline; and Leonard, Robert Gary, 5,703,935, Cl. 379-88.000.
Leone, Gino Luigi: *See—*
Sivilotti, Olivo Giuseppe; Leone, Gino Luigi; Sutherland, James Gordon; Thorburn, Herbert James; and Crosato, Bruno, 5,701,775, Cl. 72-201.000.
Leong, Steven R.: *See—*
Doerschuk, Claire M.; Fong, Sherman; Hebert, Caroline Alice; Kim, Kyung Jin; and Leong, Steven R., 5,702,946, Cl. 435-320.100.
Leong, Tony P.; North, Edward S.; and Herbst, Richard Linsley, to New Wave Research. Multi-wavelength variable attenuator and half wave plate. 5,703,713, Cl. 359-352.000.
Le Person, Henri; Minot, Christophe; and Palmier, Jean-François, to France Telecom. Light-controlled semiconductor heterostructure component for generating oscillation at microwave frequencies. 5,703,379, Cl. 257-21.000.
Leroux, Thierry, to Eldim. Device for colorimetric measurement of a display screen. 5,703,686, Cl. 356-418.000.
Lesieur, Daniel; Fourmaintraux, Eric; Depreux, Patrick; Delagrange, Philippe; Renard, Pierre; and Guardiola-Lemaitre, Béatrice, to Adir Et Compagnie. Method of treating disorders of the melatoninergic system and a certain benzofuran containing compound. 5,703,121, Cl. 514-469.000.
L'Etat Francais represente par le Delegue general pour l'Armement: *See—*
Paidassi, Serge; Ernoult, Jacques; Brun, Michel; Monge-Cadet, Pierre; Pauleau, Yves; and Farges, Guy, 5,702,829, Cl. 428-610.000.
Letkeman, Kim D.: *See—*
Pinard, Deborah L.; and Letkeman, Kim D., 5,703,942, Cl. 379-207.000.
Letts, L. Gordon: *See—*
Garvey, David S.; Letts, L. Gordon; Renfroe, H. Burt; and Tam, Sang William, 5,703,073, Cl. 514-226.500.
Leung, Chi Hung: *See—*
Pawlak, Andrzej Marian; and Leung, Chi Hung, 5,703,550, Cl. 335-78.000.
Leung, Wingyu; and Lin, Jeffrey J., to Monolithic System Technology, Inc. Method and structure for generating a boosted word line voltage and a back bias voltage for a memory array. 5,703,827, Cl. 365-230.060.
Leuschner, Rainer: *See—*
Sezi, Recai; Borndoerfer, Horst; Ahne, Hellmut; Birkle, Siegfried; Kuehn, Eberhard; Leuschner, Rainer; Rissel, Eva; and Sebald, Michael, 5,703,186, Cl. 526-272.000.
Levankovskii, Igor Anatolyevich; Grinevitskii, Yurii Alexandrovich; Shults, Victor Danilovich; and Alexandrov, Yurii Victorovich. Tool for crushing hard material. 5,702,160, Cl. 299-111.000.
Lever Brothers Company, Division of Conopco, Inc.: *See—*
Bae-Lee, Myongsuk; Falk, Nancy; and Vasudevan, Tirucherai Varahan, 5,703,032, Cl. 510-320.000.
Levilly, Philippe; and Leloup, Yves A. Portable equipment for immobilizing personal firearms. 5,703,317, Cl. 89-37.030.
Levin, Edward D.: *See—*
Rose, Jed E.; and Levin, Edward D., 5,703,101, Cl. 514-343.000.
Levine, Leon: *See—*
Cantor, Stephen E.; and Levine, Leon, 5,703,138, Cl. 522-29.000.
Leviton Manufacturing Co., Inc.: *See—*
Gershen, Bernard; Krajci, Edward; and Neiger, Benjamin, 5,703,458, Cl. 318-799.000.
Lewell, Xiao-Qing: *See—*
Armour, Duncan Robert; Evans, Brian; Middlemiss, David; Naylor, Alan; Pegg, Neil Anthony; Vinader, Maria Victoria; Giblin, Gerard Martin Paul; Hubbard, Tania; Hann, Michael Menteith; Lewell, Xiao-Qing; and Watson, Stephen Paul, 5,703,240, Cl. 546-210.000.
Lewellen, Guy: *See—*
Yu, Jimmy; and Lewellen, Guy, 5,703,597, Cl. 342-357.000.
Lewis, Alan G.: *See—*
Martin, Russel A.; Bruce, Richard H.; DaCosta, Victor M.; Fiske, Thomas G.; Lewis, Alan G.; Silverstein, Louis D.; Steemers, Hugo L.; Thompson, Malcolm J.; and Turner, William D., 5,703,621, Cl. 345-147.000.
Lewis, Eric A.; and Slater, Robert H., to General Electric Company. Double rabbet combustor mount. 5,701,733, Cl. 60-39.310.
Lewis, Michael E.; Kauer, James C.; Smith, Kevin R.; Callison, Kathleen V.; Baldino, Frank; Neff, Nicola; and Iqbal, Mohamed, to Cephalon, Inc. Treating disorders by application of insulin-like growth factors and analogs. 5,703,045, Cl. 514-12.000.
Lex, Joseph: *See—*
O'Dell, Robin D.; and Lex, Joseph, 5,702,806, Cl. 428-206.000.
Lexmark International, Inc.: *See—*
Bracken, Peter W.; Brener, Jeffery R.; DiGirolamo, Martin V.; Mullinix, Sam E., Jr.; Stafford, Donald W.; and Wallin, Peter E., 5,702,812, Cl. 428-323.000.
Ethington, Bryan Leslie; Gostomski, John Francis; Minnick, Jeffrey Alan; and Songer, Christopher Mark, 5,704,022, Cl. 395-115.000.
Leybold Aktiengesellschaft: *See—*
Schulmann, Winfried; Thimm, Franz; and Kaiser, Helmut, 5,702,523, Cl. 117-208.000.
Leybold Inficon, Inc.: *See—*
Wampler, Francis M., III, 5,703,359, Cl. 250-288.000.
LG Electronics Inc.: *See—*
Choi, Kyung-Hwan, 5,702,625, Cl. 219-702.000.
Kim, Hyung Suk; and Shin, Kwang Young, 5,703,651, Cl. 348-416.000.
Kim, Jong Hyun, 5,703,956, Cl. 381-63.000.
Kim, Tae Yoon, 5,702,626, Cl. 219-711.000.
Lee, Doo Hee; and Yang, Tae Seok, 5,703,994, Cl. 386-52.000.
Normile, James, 5,703,697, Cl. 358-433.000.
Otoguro, Yoshishige, 5,703,953, Cl. 381-12.000.
Shin, Woo-Sup, 5,703,668, Cl. 349-110.000.
Tark, Kyoung Sig; and Park, Sung Oun, 5,703,336, Cl. 181-179.000.
LG Semicon Co., Ltd.: *See—*
Kang, Dae Soon, 5,703,406, Cl. 257-778.000.
Lee, Byung-Il, 5,702,964, Cl. 437-43.000.
Park, Young Seung, 5,704,033, Cl. 395-183.060.

Lhenen, Fred: *See—*
McPherson, Roger W.; Shrive, Nigel G.; Damson, Erich; Frank, Cyril B.; Lhenen, Fred; and Schachar, Norman S., 5,701,913, Cl. 128-774.000.
Li, Hsiu-Lan: *See—*
Chien, Rong-Wu; and Li, Hsiu-Lan, 5,702,869, Cl. 430-313.000.
Li, Lehmann K., to Li Medical Technologies, Inc. Retractable fixation device. 5,702,215, Cl. 411-21.000.
Li Medical Technologies, Inc.: *See—*
Li, Lehmann K., 5,702,215, Cl. 411-21.000.
Li, Qun; Wang, Wei-Bo; Chu, Daniel T.; and Hasvold, Lisa Anne, to Abbott Laboratories. Process for preparation of chiral 3-amino-pyrrolidine and analogous bicyclic compounds. 5,703,244, Cl. 548-557.000.
Li, Tze Fen; Pengwu, Chung-Mou; Chen, Cheng-Der; and Sun, Chung-Yu, to Industrial Technology Research Institute. Apparatus and method for normalizing and categorizing linear prediction code vectors using Bayesian categorization technique. 5,704,004, Cl. 395-2.520.
Liang, Mong-Song, to Taiwan Semiconductor Manufacturing Company, Ltd. Blending integrated circuit technology. 5,702,988, Cl. 438-238.000.
Liang, Mong-Song: *See—*
Wang, Chen-Jong; and Liang, Mong-Song, 5,702,989, Cl. 438-397.000.
Liang, Shan-Kuai. Retractable laundry suspension rod. 5,702,010, Cl. 211-105.100.
Liao, Chi-chao. Shock absorbing device for a bicycle seat. 5,702,093, Cl. 267-132.000.
Liao, Ching-Wen; Kuo, Chin-Chuan; Peng, Chi-Kang; and Lin, Tsun-Ching, to Taiwan Semiconductors Manfuacturing Company, Ltd. Compete hot plate temperature control system for hot treatment. 5,702,624, Cl. 219-497.000.
Liao, Jih-Shun. Mop with a tape of rags taking up mechanism. 5,701,630, Cl. 15-228.000.
Liao, Tsun-Chi, to Hwa Shin Musical Instrument Co., Ltd. Device holder for drums. 5,703,306, Cl. 84-421.000.
Lichtenberg, Edward. Safety fluid collector. 5,702,346, Cl. 604-110.000.
Lichtman, Philip R.: *See—*
Short, Stephen P.; and Lichtman, Philip R., 5,701,560, Cl. 337-348.000.
Licile Salter Packard Children's Hospital at Stanford: *See—*
Wright-Ott, Christine; Wadsworth, John F.; and Harris, Gerald R., 5,701,968, Cl. 180-65.100.
Liebe, Robert James, Jr. Water-added evaporation process for making thin plastic lettering webs. 5,702,790, Cl. 428-46.000.
Liebermann, Benno E. Low temperature clamshell cooking and staging grill apparatus and pathogenic risk management process. 5,701,804, Cl. 99-336.000.
Liebke, William R.; Dawson, David R.; Fredette, Mark A.; and Goodstein, Mark B., to United Technologies Corporation. Method of removing excess overlay coating from within cooling holes of aluminide coated gas turbine engine components. 5,702,288, Cl. 451-36.000.
Lien, Tzung-Min; and Lien, Tzung-Shih, to Chen Yn Enterprise Co., Ltd. Christmas lamp socket. 5,702,268, Cl. 439-419.000.
Lien, Tzung-Shih: *See—*
Lien, Tzung-Min; and Lien, Tzung-Shih, 5,702,268, Cl. 439-419.000.
Liese, Hermann. Sound absorber. 5,703,338, Cl. 181-264.000.
Liethen, Christine M.: *See—*
Stecker, Philip P.; and Liethen, Christine M., 5,701,953, Cl. 166-75.130.
LifeGear, Inc.: *See—*
Hsieh, Yi Fong, 5,702,332, Cl. 482-130.000.
Light & Sound Design Ltd.: *See—*
Evans, Nigel; Hewlett, William E.; and Parker, Richard, 5,702,082, Cl. 248-230.100.
Light Sciences Limited Partnership: *See—*
Chen, James C.; and Wiscombe, Brent, 5,702,432, Cl. 607-88.000.
Lim, King W.: *See—*
Bluemel, Mark R.; Lim, King W.; and Bluemel, Frederick, 5,703,785, Cl. 364-479.140.
Limacher, Urs; and Lamprecht, Stefan, to Sulzer Medizinaltechnik AG; and Allo Pro AG. Artificial joint shell. 5,702,476, Cl. 623-22.000.
Limburg, William W.: *See—*
Schank, Richard L.; Renfer, Dale S.; Limburg, William W.; Kunzmann, Brendan W.; and Pai, Damodar M., 5,702,858, Cl. 430-59.000.
Lim-Wilby, Marguerita S. L.: *See—*
Semple, Joseph Edward; Ardecky, Robert John; Nutt, Ruth Foelsche; Ripka, William Charles; Rowley, David C.; Lim-Wilby, Marguerita S. L.; and Brunck, Terence Kevin, 5,703,208, Cl. 530-331.000.
Lin, Chih-I. Intervertebral fusion device. 5,702,391, Cl. 606-61.000.
Lin, Chih-I. Bone marrow cavity fixation device for treating a fractured bone. 5,702,481, Cl. 623-23.000.
Lin, Ching-Yuan. Orbital lamp. 5,702,177, Cl. 362-226.000.
Lin, Jeffrey J.: *See—*
Leung, Wingyu; and Lin, Jeffrey J., 5,703,827, Cl. 365-230.060.
Lin, Ko-Chung: *See—*
Talley, John J.; Getman, Daniel P.; Lin, Ko-Chung; DeCrescenzo, Gary A.; Rogier, Donald J., Jr.; and Freskos, John N., 5,703,076, Cl. 514-237.500.
Lin, Mao-Chao; and Wang, Jia-Yin, to Chen, Chung-Chin. Decoding method for trellis codes with large free distances. 5,703,911, Cl. 375-341.000.
Lin, Tsun-Ching: *See—*
Liao, Ching-Wen; Kuo, Chin-Chuan; Peng, Chi-Kang; and Lin, Tsun-Ching, 5,702,624, Cl. 219-497.000.
Lin, YouLing: *See—*
Hennessey, A. Kathleen; Lin, YouLing; Hastings, Howard V., III; Lovelace, Jerome R.; and Chang, Ning San, 5,703,969, Cl. 382-276.000.
Lin, Yu-Chu. Setting angle adjuster for the car headlamp. 5,701,783, Cl. 74-89.130.
Lindberg, Caroline; and Engdahl, Per, to Höganäs AB. Iron-based powder containing chromium, molybdenum and manganese. 5,703,304, Cl. 75-243.000.
Lindberg, J. Eric: *See—*
Phillips, Timothy A.; and Lindberg, J. Eric, 5,703,473, Cl. 323-282.000.
Lindemann, Gert: *See—*
Dietz, Hermann; Gruenwald, Werner; De La Prieta, Claudio; Lindemann, Gert; Eisele, Ulrich; and Schmiedel, Carmen, 5,702,580, Cl. 204-426.000.
Lindquist, Thomas R., to Convault, Inc. Container with secondary containment venting by form of construction. 5,702,026, Cl. 220-745.000.
Lindquist, Tommy, to Aktiebolaget Electrolux. Cooling arrangement for power components in a vacuum cleaner. 5,701,631, Cl. 15-327.100.
Linear Drives Limited: *See—*
Kelly, Hugh-Peter Granville, 5,703,417, Cl. 310-12.000.
Lingham, Russell B.: *See—*
Jayasuriya, Hiranthi; Lingham, Russell B.; Pelaez, Fernando; Sanchez, Manuel; Silverman, Keith C.; Singh, Sheo Bux; and Zink, Deborah L., 5,703,067, Cl. 514-179.000.
Linn, Horst: *See—*
Mallah, Mohamad; Linn, Horst; Saner, Niklaus; and Voirol, Peter, 5,703,343, Cl. 219-687.000.
Lion Apparel, Inc.: *See—*
Aldridge, Donald, 5,701,606, Cl. 2-81.000.
Liotta, Dennis C.: *See—*
Schinazi, Raymond F.; and Liotta, Dennis C., 5,703,058, Cl. 514-45.000.
Liou, Sam Foo. Paint roller device. 5,702,525, Cl. 118-200.000.
Liposome Company, Inc., The: *See—*
Mayhew, Eric; Ali, Shaukat; and Janoff, Andrew S., 5,703,117, Cl. 514-449.000.
Lippstreu, Stefan: *See—*
Vilsmeier, Stefan; Lippstreu, Stefan; and Bertram, Michael, 5,702,406, Cl. 606-130.000.
Lipton, Richard J.: *See—*
Lopresti, Daniel P.; Korth, Henry F.; Sandberg, Jonathan S.; and Lipton, Richard J., 5,703,972, Cl. 382-310.000.
Lisco, Inc.: *See—*
Stennett, Patrick G., 5,702,313, Cl. 473-546.000.
Litel Instruments, Inc.: *See—*
Smith, Adlai H.; Hunter, Robert O., Jr.; McArthur, Bruce; Blair, Steven; and Wilkinson, Jim, 5,702,662, Cl. 264-400.000.
Littke, Willis R.: *See—*
Carlson, William C.; Hartle, Jeffrey E.; Salatas, Kathy; Harris, Amy; and Littke, Willis R., 5,701,699, Cl. 47-57.600.
Little, Jack Ryan: *See—*
Buchhop, Thomas Robert; D'Alleva, Randall; Darnell, Ronald Keith; Little, Jack Ryan; and Pedersen, Curtis Thomas, 5,703,777, Cl. 364-431.062.
Little, Lewis Henry; Hopkins, Russell Bolin; and Matly, John Michael, to Delco Electronics Corp. Pressure sensor having reduced hysteresis and enhanced electrical performance at low pressures. 5,703,296, Cl. 73-756.000.
Little, Roger G.: *See—*
Ammons, William Steve; and Little, Roger G., 5,703,038, Cl. 514-2.000.
Littlewood, Barry: *See—*
Smith, Daniel; Willis, Bernard M.; Marschke, Kenneth P., Jr.; Littlewood, Barry; Schoen, Vulgens; Gucker, Carl; Nordmeyer, Michael; and Miklewicz, Thaddeus, 5,701,656, Cl. 29-558.000.
Litton Systems, Inc.: *See—*
Wannagot, Gary A.; Keepers, Curtis Brent; Goebel, Timothy R.; Cwiakala, James M., Jr.; and Connors, Clifford J., 5,703,354, Cl. 250-214.0VT.
Litwak, Philip: *See—*
Buck, Keith Evan; Farrar, David John; Harvey, Robert Joseph; Litwak, Philip; and Rueff, John Robert, 5,701,919, Cl. 128-898.000.
Liu, David Nan-Chou: *See—*
Huang, Jammy Chin-Ming; and Liu, David Nan-Chou, 5,702,281, Cl. 445-50.000.
Liu, Jack. Driving structure of the external rotary disk of the crystal ball. 5,701,785, Cl. 74-421.00R.
Liu, William U.; and Hill, Darrell G., to Texas Instruments Incorporated. Method for the fabrication of bipolar transistors. 5,702,958, Cl. 437-31.000.
Liu, Yi-Tsung: *See—*
Saksena, Anil K.; Girijavallabhan, Viyyoor M.; Lovey, Raymond G.; Pike, Russell E.; Wang, Haiyan; Liu, Yi-Tsung; Ganguly, Ashit K.; and Bennett, Frank, 5,703,079, Cl. 514-252.000.
Saksena, Anil K.; Girijavallabhan, Viyyoor M.; Lovey, Raymond G.; Pike, Russell E.; Wang, Haiyan; Liu, Yi-Tsung; Ganguly, Ashit K.; and Bennett, Frank, 5,703,236, Cl. 544-366.000.
Liu, Zih-Fang: *See—*
Martell, Charles R.; Cassidy, Michael J.; Ramsey, Anita K.; Liu, Zih-Fang; Ting, Chou Ling; and McKellar, H. Anderson, 5,703,781, Cl. 364-470.060.
Livernois Research & Development Company: *See—*
Giles, Lyle T., 5,701,781, Cl. 72-405.120.
Ljungberg, Björn, to Sandvik AB. Al_2O_3-coated cutting tool preferably for near net shape machining. 5,702,808, Cl. 428-216.000.

Llanos, Zenon R.; Provoost, Guido F.; Deering, William G.; and Debaene, Frans J., to Gulf Chemical & Metallurgical Corporation. Integrated process for the recovery of metals and fused alumina from spent catalysts. 5,702,500, Cl. 75-10.250.
Lo, Chester K. C.; and Tanaka, Paul I., to Hughes Electronics. Radar exciter local oscillator phase lock acquisition control circuit. 5,703,538, Cl. 331-4.000.
Localmed, Inc.: *See—*
Esch, Brady, 5,701,905, Cl. 128-673.000.
Locher, Hans. Apparatus for closing wrist straps. 5,701,640, Cl. 24-303.000.
Lock, Andreas: *See—*
Treutler, Christoph; Benz, Rolf; Muenzel, Horst; Schmidt, Steffen; Reihlen, Eckart; and Lock, Andreas, 5,703,287, Cl. 73-204.260.
Lock, William E.: *See—*
Bocko, Peter L.; Eid, Bernard A.; Johnson, Ronald E.; Lock, William E.; Shoup, Robert D.; and Themont, Jean-Pierre, 5,701,815, Cl. 101-211.000.
Lockheed Martin Corporation: *See—*
Lee, James Michael, 5,702,166, Cl. 312-107.000.
Lockheed Martin Energy Systems, Inc.: *See—*
Dees, H. Craig, 5,702,940, Cl. 435-252.100.
Lowndes, Douglas H.; Pedraza, Anthony J.; DeSilva, Melvin J.; and Kumar, Rajagopalan A., 5,703,341, Cl. 219-121.660.
Locus Incorporated: *See—*
Blandino, Thomas P., 5,703,542, Cl. 331-70.000.
Loeffler, Charles P. Male contraceptive. 5,701,914, Cl. 128-842.000.
Loehrke, John M., to DEC International, Inc. Beverage dispensing system with bottle identification rings. 5,702,032, Cl. 222-63.000.
Löffert, Christiane: *See—*
Birkhan, Horst; Fender, Michael; Irrgang, Bernhard; Löffert, Christiane; and Schüssler, Simone, 5,703,035, Cl. 510-423.000.
Loftus, James E.: *See—*
Pellegrin, Michael T.; Gavin, Patrick M.; Ault, Patrick L.; Loftus, James E.; Haines, Randall M.; and Morris, Virgil, 5,702,658, Cl. 264-172.140.
Loftus, John M.: *See—*
Farris, Mark S.; Harrison, Michael A.; Loftus, John M.; Taylor, Aaron K.; Mack, Christoph E.; and Collins, Ross P., 5,702,092, Cl. 267-64.150.
Logitech, Inc.: *See—*
Bidiville, Marc; Raeber, Eric; Arreguit, Javier; Buczek, Harthmuth; Van Shaik, Floris A.; Bauduin, François; and O'Keeffe, Denis, 5,703,356, Cl. 250-221.000.
Logtens, Gerardus M. C. J.; and Scheepens, Franciscus G. M., to Stork Contiweb B.V. Auxiliary transport device. 5,702,043, Cl. 226-92.000.
LoJack Corporation: *See—*
Duvall, William Robert, Jr., 5,704,008, Cl. 395-2.820.
Lombardo, Brian Scott: *See—*
Rosenberg, Ronald Owen; Singh, Ajaib; Maupin, Christopher James; and Lombardo, Brian Scott, 5,703,193, Cl. 528-44.000.
Lombardo, Massimo: *See—*
Collins, Mark L.; Blomquist, Cecile; Lombardo, Massimo; and Eldredge, John, 5,702,896, Cl. 435-6.000.
London, Eugene J., to Stein, Inc. Conveyor for processing equipment having gas flow compensation. 5,702,245, Cl. 432-14.000.
Long, Eugene; Schmidt, Jeff; and Lynch, Frank, to Ball Corporation. Portable hydrogen generator. 5,702,491, Cl. 48-197.00R.
Lontine, Michael D.: *See—*
Arts, Gene H.; Carr, Jan E.; Kuk-Nagle, Karen T.; Lontine, Michael D.; and Millberg, Brian A., 5,702,387, Cl. 606-45.000.
Lonza, Ltd.: *See—*
Kiener, Andreas; Roduit, Jean-Paul; and Glöckler, Rainer, 5,702,930, Cl. 435-122.000.
Lopresti, Daniel P.; Korth, Henry F.; Sandberg, Jonathan S.; and Lipton, Richard J., to Panasonic Technologies, Inc. Certifiable optical character recognition. 5,703,972, Cl. 382-310.000.
Loral Vought Systems Corporation: *See—*
Coggan, David A., 5,703,315, Cl. 89-1.140.
L'Oreal: *See—*
Afriat, Isabelle; and Gagnebien, Didier, 5,703,041, Cl. 514-2.000.
Dubief, Claude; and Cauwet, Danièle, 5,702,690, Cl. 424-70.100.
Galey, Jean Baptiste; and Dumats, Jacqueline, 5,703,095, Cl. 514-332.000.
Goncalves, Antonin, 5,702,017, Cl. 220-23.400.
Joulia, Gérard, 5,702,713, Cl. 424-401.000.
Lagrange, Alain; Vandenbosche, Jean Jacques; Cotteret, Jean; and Audousset, Marie Pascale, 5,703,266, Cl. 558-408.000.
Mondon-Rossignol, Sylvie; and Defossez, Béatrice, 5,702,689, Cl. 424-63.000.
Lorentz, Robert D.: *See—*
Taylor, Phillip A.; Florczak, Jeffrey M.; Peterson, Mark A.; Iverson, Paul R.; Skorjanec, Joseph; and Lorentz, Robert D., 5,702,876, Cl. 430-496.000.
Lorenzen, Claus-Jürgen: *See—*
Carlhoff, Christoph; Jogwich, Martin; Lorenzen, Claus-Jürgen; and Nahmias, Marco, 5,702,550, Cl. 156-64.000.
Lorriette, Patrick, to Massey-Ferguson SA. Wet clutch assembly. 5,701,986, Cl. 192-70.120.
Losi, Raymond, Jr.; and Tsai, Ming-Liang. Collapsible shelter. 5,701,923, Cl. 135-131.000.
Loughney, Kate: *See—*
Beavo, Joseph A.; Corbin, Jackie D.; Ferguson, Kenneth M.; Francis, Sharron H.; Kadlecek, Ann; Loughney, Kate; McAllister-Lucas, Linda M.; Sonnenburg, William K.; and Thomas, Melissa K., 5,702,936, Cl. 435-196.000.
Loullis, Costas C.: *See—*
Suto, Mark J.; Girten, Beverly E.; Houghten, Richard A.; Loullis, Costas C.; and Tuttle, Ronald R., 5,703,042, Cl. 514-8.000.
Louvel, Jean-Paul: *See—*
Hermann, Wolfgang; and Louvel, Jean-Paul, 5,703,764, Cl. 363-21.000.
Lovelace, Jerome R.: *See—*
Hennessey, A. Kathleen; Lin, YouLing; Hastings, Howard V., III; Lovelace, Jerome R.; and Chang, Ning San, 5,703,969, Cl. 382-276.000.
Lovely, Sydney: *See—*
Heegard, Chris; King, Andrew J.; Lovely, Sydney; and Kolze, Thomas J., 5,703,887, Cl. 371-42.000.
Lovey, Raymond G.: *See—*
Saksena, Anil K.; Girijavallabhan, Viyyoor M.; Lovey, Raymond G.; Pike, Russell E.; Wang, Haiyan; Liu, Yi-Tsung; Ganguly, Ashit K.; and Bennett, Frank, 5,703,079, Cl. 514-252.000.
Saksena, Anil K.; Girijavallabhan, Viyyoor M.; Lovey, Raymond G.; Pike, Russell E.; Wang, Haiyan; Liu, Yi-Tsung; Ganguly, Ashit K.; and Bennett, Frank, 5,703,236, Cl. 544-366.000.
Lovic, William R.: *See—*
Whitlow, Graham A.; Gungor, Mehmet N.; and Lovic, William R., 5,701,993, Cl. 200-264.000.
Lowell Engineering Corporation: *See—*
Boddy, Ian; Potts, Matthew D.; and Foote, Keith D., 5,703,731, Cl. 359-841.000.
Boddy, Ian; Potts, Matthew D.; Foote, Keith D.; and Ruse, James, 5,703,732, Cl. 359-841.000.
Lowndes, Douglas H.; Pedraza, Anthony J.; DeSilva, Melvin J.; and Kumar, Rajagopalan A., to Lockheed Martin Energy Systems, Inc. Method for adhesion of metal films to ceramics. 5,703,341, Cl. 219-121.660.
LSI Logic Corporation: *See—*
Clark, Iain R.; and Fiedler, Alan, 5,703,587, Cl. 341-144.000.
Jensen, John V., 5,703,376, Cl. 250-492.220.
Padmanabhan, Gobi R., 5,702,957, Cl. 437-24.000.
Shei, Darlene; and Cheng, Jiurong, 5,703,788, Cl. 364-488.000.
LTS Lohmann Therapie-Systeme GmbH & Co. KG: *See—*
Horstmann, Michael; and Hermann, Fritz, 5,702,721, Cl. 424-449.000.
Lu, Huizong; and Taheri, Ali Reza, to International Business Machines Corporation. Apparatus for optical differential measurement of glide height above a magnetic disk. 5,703,684, Cl. 356-357.000.
Lubrizol Corporation, The: *See—*
Floyd, Robert L., 5,703,022, Cl. 508-345.000.
Lucas, Gary L.; Keller, Kathleen E.; Agatston, David; and Caplan, Drew, to MCT Communications Corp. Method of optimizing access trunk configurations and system therefor. 5,703,938, Cl. 375-112.000.
Lucca, Frank J.; Sutula, Daniel P., Jr.; Dufrane, Ronald M.; and Gladden, Ernest L., to Ensign Bickford Company, The. Connector for blast initiation system. 5,703,320, Cl. 102-275.700.
Lucent Technologies Inc.: *See—*
Bergmann, Ernest Eisenhardt, 5,703,992, Cl. 385-139.000.
Bullock, Norma Kathryn; and Fent, Douglas G., 5,703,471, Cl. 320-51.000.
Bushnell, William Jackson, 5,703,939, Cl. 379-113.000.
Curtis, Kevin; and Wilson, William Larry, 5,703,705, Cl. 359-22.000.
DeBalko, George Andrew, 5,703,944, Cl. 379-399.000.
DiGiovanni, David John; Judkins, Justin Boyd; Pedrazzani, Janet Renee; Vengsarkar, Ashish Madhukar; and Walker, Kenneth Lee, 5,703,978, Cl. 385-37.000.
Filas, Robert William; and Marchman, Herschel Maclyn, 5,703,979, Cl. 385-43.000.
Hurst, Jerry C.; and Potteiger, Brian D., 5,702,066, Cl. 242-601.000.
Khan, Mujibun Nisa; and Zucker, Jane Elisa, 5,703,989, Cl. 385-130.000.
Kleijn, Willem Bastiaan; and Nahumi, Dror, 5,704,003, Cl. 395-2.290.
Matias, Yossi; and Sahinalp, Suleyman Cenk, 5,703,581, Cl. 341-67.000.
McAteer, Jeffrey Phillip, 5,703,957, Cl. 381-92.000.
Mettler, Stephen Clement; and White, Ian Arthur, 5,703,973, Cl. 385-14.000.
Otto, Mary Rita, 5,703,943, Cl. 379-265.000.
Robertson, Derek Guy; and Shute, Marcus W., 5,703,990, Cl. 385-135.000.
Suhir, Ephraim, 5,703,350, Cl. 235-492.000.
Vergnes, Alain; and Albert, Patrick, 5,703,915, Cl. 375-371.000.
Ludden, Christopher A.: *See—*
Callahan, Michael J., Jr.; and Ludden, Christopher A., 5,703,617, Cl. 345-90.000.
Ludington, Paul D.: *See—*
Bietry, Joseph R.; Estelle, Lee R.; and Ludington, Paul D., 5,703,721, Cl. 359-646.000.
Lüdke, Christian: *See—*
Hoffmann, Erwin; Lüdke, Christian; and Skole, Jochen, 5,703,342, Cl. 219-497.000.
Luedke, Thomas J.; Aagaard, Randy G.; Niemi, Carl A.; and Shea, Andrew J., to SICO Incorporated. Panel connector apparatus. 5,701,703, Cl. 52-36.500.
Lui, Eddie K.: *See—*
Allen, Ronald L.; Bishop-Jones, Brenda J.; Cykana, Michael J.; Lui, Eddie K.; and Sipe, Stanley Wayne, 5,703,783, Cl. 364-478.010.

Luisi, Domenic, to Rubinet Faucet Company, The. Backflow prevention device and vacuum breaker for kitchen plumbing. 5,701,926, Cl. 137-218.000.

Luk Fahrzeug-Hydraulik GmbH & Co.: *See—*

Nied-Menninger, Thomas; Körtge, Randolf; and Denfeld, Bernd, 5,702,242, Cl. 418-150.000.

Lum, Paul; Chang, Carl; and Zawadzki, Jerry, to Hewlett Packard Company. Ultrasonic probe with back and forth sweeping ultrasonic source. 5,701,901, Cl. 128-662.060.

Luman, David P.: *See—*

Goble, E. Marlowe; Luman, David P.; Chervitz, Alan; Story, C. Brad; and Gundlalpalli, Ramarao, 5,702,397, Cl. 606-72.000.

Lundstrom, Robert W.; McCumber, Roger D.; and Samuel, Benjamin H., to Datacard Corporation. Card affixing and form folding system. 5,701,727, Cl. 53-569.000.

Lunzman, Stephen V., to Caterpillar Inc. Hydraulic control system having a bypass valve. 5,701,933, Cl. 137-596.120.

Lusher, David M.: *See—*

Wong, Wilbur E.; Lusher, David M.; and Hwang, William B., 5,703,771, Cl. 363-134.000.

Lust, Victor: *See—*

Martin, Wallace Anthony; van der Meulen, Wybren; Menezes, Edgar V.; Renkema, Kornelis; Phillips, Robert B.; Lust, Victor; Wu, Jongliang; and Eshuis, Gerbrand, 5,702,735, Cl. 425-548.000.

Lutz, Daniel Reese: *See—*

Farkas, David Michael; and Lutz, Daniel Reese, 5,703,371, Cl. 250-390.020.

Lutz, Markus: *See—*

Zabler, Erich; Wolf, Joerg; and Lutz, Markus, 5,703,293, Cl. 73-504.020.

Lutz, Martin, to Mahle GmbH. Light-metal piston for internal combustion engines. 5,701,803, Cl. 92-208.000.

Luxembourg Patent Company, S.A.: *See—*

Bourscheid, Georges; and Muttesch, Jim, 5,701,932, Cl. 137-558.000.

Luzaich, Mark: *See—*

Kreysler, William; Labesque, Serge; Jordan, Kurt; Luzaich, Mark; Colombo, David; Marcus, Edward J.; and Koosa, Richard, 5,701,706, Cl. 52-169.600.

Lynch, Frank: *See—*

Long, Eugene; Schmidt, Jeff; and Lynch, Frank, 5,702,491, Cl. 46-197.00R.

Lynch, Marvin L.: *See—*

McClish, Michael A.; Lynch, Marvin L.; Selfe, Margaret A.; Steinl, Gregory; and Remboski, Donald J., Jr., 5,703,283, Cl. 73-116.000.

Lyon, James T.: *See—*

Conville, John J.; Chwalik, Robert; Desai, Shrikant V.; Turcotte, David E.; and Lyon, James T., 5,702,631, Cl. 252-76.000.

Lyons, Richard A. Lift for watercraft. 5,701,834, Cl. 114-48.000.

Lysy, Regis: *See—*

Erilli, Rita; Gallant, Chantal; and Lysy, Regis, 5,703,028, Cl. 510-236.000.

Ma, Chaoying; and Kowalak, Albert D., to University of Massachusetts. Electrocatalyst. 5,702,836, Cl. 429-13.000.

Ma, Fred S. F.: *See—*

Farrier, Michael G.; Kamasz, Stacy R.; Ma, Fred S. F.; and Bendett, Mark P., 5,703,639, Cl. 348-241.000.

Maarek, Jean-Michel I.: *See—*

Vari, Sandor G.; and Maarek, Jean-Michel I., 5,701,902, Cl. 128-664.000.

Maas, Wayne David: *See—*

Dunn, William Frank; Maloney, John Michael; Hooper, Michael Lynn; and Maas, Wayne David, 5,703,680, Cl. 356-35.500.

Maayeh, Elias Shukri, to Uniplast, Inc. Multi-temperature glue stick. 5,703,153, Cl. 524-499.000.

Mabilat, Claude; and Christen, Richard, to Bio Merieux. Nucleotide fragment of the 23S ribosomal RNA of mycobacteria, derived probes and primers, reagent and detection method. 5,703,217, Cl. 536-24.100.

Macek, Thomas George: *See—*

Brodsky, William Louis; Herard, James Daniel; Macek, Thomas George; Sharp, Timothy Lee; and Shovlowsky, George Joseph, 5,703,331, Cl. 174-254.000.

MacElwee, Thomas; Kovacic, Stephen J.; and Ojha, Jugnu J., to Northern Telecom. Method for low-loss insertion of an optical signal from an optical fibre to a waveguide integrated on to a semiconductor wafer. 5,703,980, Cl. 385-49.000.

Macheske, Robert L.: *See—*

McKibben, Kenneth D.; Gould, Alan P.; Wuepper, Thomas E.; Minor, Daniel D.; Salgat, Mark T.; Marthaler, David; Speaks, Jackie M.; Macheske, Robert L.; Good, David; Gillette, Richard A.; Bond, Philip L.; Coyle, Donald C.; Rentfrow, Darrell; Stiens, Thomas O.; and Stevens, Larry M., 5,701,945, Cl. 164-130.000.

Machida, Kenichi: *See—*

Shimizu, Hirokazu; and Machida, Kenichi, 5,703,285, Cl. 73-118.100.

Machida, Yukihumi, to Ryosei Electro-Circuit Systems, Ltd. Connecting terminal and method or manufacturing the same. 5,702,272, Cl. 439-843.000.

Machino, Hideki: *See—*

Yamamoto, Yorihisa; Nishi, Yutaka; Nishimori, Takashi; Tokunaga, Hiroyuki; and Machino, Hideki, 5,703,775, Cl. 364-424.051.

Machold, Timothy R.: *See—*

Stevens, John H.; Sterman, Wesley D.; Gifford, Hanson S., III; and Machold, Timothy R., 5,702,368, Cl. 604-171.000.

Macintosh, David: *See—*

Rogina, Peter R.; and Macintosh, David, 5,703,961, Cl. 382-154.000.

Mack, Christoph E.: *See—*

Farris, Mark S.; Harrison, Michael A.; Loftus, John M.; Taylor, Aaron K.; Mack, Christoph E.; and Collins, Ross P., 5,702,092, Cl. 267-64.150.

Macku, Charles G.; and Boyles, Alan W., to Cedarapids, Inc. Method for compensating differential compaction in an asphalt paving mat. 5,702,201, Cl. 404-75.000.

MacLaren, David S., to Jet Inc. Bat media support frame apparatus and method. 5,702,079, Cl. 248-127.000.

Macromed, Inc.: *See—*

Cha, Younsik; Choi, Young Kweon; and Bae, You Han, 5,702,717, Cl. 424-425.000.

Madamba, Shirley M.: *See—*

Pilot, John F.; Madamba, Shirley M.; and Mullen, Penny M., 5,702,864, Cl. 430-264.000.

Madden, James R., Jr. Trunk lid, bullet resistant apparatus. 5,703,316, Cl. 89-36.080.

Madden, Mark: *See—*

Hastrup, Sven; Branner, Sven; Jørgensen, Birthe Ravn; Christensen, Tove; Jørgensen, Birgitte Bojer; Shuster, Jeffrey R.; Madden, Mark; Moyer, Donna L.; and Fuglsang, Claus, 5,702,934, Cl. 435-183.000.

Maddern, Thomas Slade: *See—*

Proctor, Richard John; Jeffrey, Mark Timothy; and Maddern, Thomas Slade, 5,703,879, Cl. 370-398.000.

Maeda, Kunio: *See—*

Koseki, Toshinori; Maeda, Kunio; and Kanno, Syoichi, 5,702,810, Cl. 428-318.800.

Maeda, Takeshi: *See—*

Kirino, Fumiyoshi; Toda, Tsuyoshi; Ide, Horishi; Sugiyama, Hisataka; Saito, Atsushi; Tsuchinaga, Hiroyuki; Maeda, Takeshi; Kugiya, Fumio; Kaku, Toshimitsu; Mita, Seiichi; Shigematsu, Kazuo; and Ouchi, Yasuhide, 5,703,855, Cl. 369-54.000.

Maeda, Tomoharu: *See—*

Takahashi, Hiroyuki; Hamada, Makoto; Fujishima, Hiromichi; Naito, Masaaki; Sasaki, Kazuya; Tsuchiya, Jiro; and Maeda, Tomoharu, 5,702,123, Cl. 280-735.000.

Maeda, Yoshinobu: *See—*

Suzuki, Shigehisa; Fukami, Tatsuya; Fujii, Yoshio; Kawano, Yuji; and Maeda, Yoshinobu, 5,703,733, Cl. 360-77.010.

Maehara, Yoshimi: *See—*

Kaku, Nobuyuki; Ono, Seiji; Maehara, Yoshimi; and Inoue, Mikihisa, 5,702,062, Cl. 242-338.400.

Maekawa, Hirotoshi, to Mitsubishi Denki Kabushiki Kaisha. Control system for engine generator. 5,703,410, Cl. 290-40.00C.

Maekawa, Kiyoshi; and Calhoon, Christina M., to John O. Butler Company. Clear dentrifice gel for interdental brushes. 5,702,686, Cl. 424-49.000.

Maezawa, Akihiko: *See—*

Fujimura, Hiroyuki; Suzuki, Takayuki; Yamada, Norio; Ichiki, Yoshiyuki; Maezawa, Akihiko; and Hayashi, Hideo, 5,702,572, Cl. 204-157.150.

Magin, Ralph W.; and Sauer, Joe D., to Albemarle Corporation. Surfactant composition for use with glyphosate comprising dimethyl amine oxide, polyethoxylated alcohol, and pyridinium halide. 5,703,016, Cl. 504-206.000.

Magneti Marelli UK Limited: *See—*

Smith, Alan Keith; Monk, John Frederick; and Tolley, Robert Frank, 5,702,178, Cl. 362-294.000.

Magnetrol International, Inc.: *See—*

Mulrooney, Michael J., 5,703,289, Cl. 73-290.00V.

Magnotte, Mark M.: *See—*

Tarter, Fred B.; Greene, Jeffrey M.; De Fazio, Thomas J.; Peck, Jan; Wylie, L. Stephen; Magnotte, Mark M.; Hall, Del; and Tarter, Scott A., 5,704,044, Cl. 395-204.000.

Mahapatra, Rama Ballav: *See—*

Strezov, Lazar; Mahapatra, Rama Ballav; Sylva, Fred de; and Mukunthan, Kannappar, 5,701,948, Cl. 164-480.000.

Mahe, Guy: *See—*

Caudal, Pierre; Mahe, Guy; Baker, Georgia Anna; and Duis, James Joseph, 5,702,555, Cl. 156-247.000.

Mahin, Daniel; and Blin, Philippe, to Hutchinson. Expandable high-pressure flexible-tube device. 5,702,109, Cl. 277-34.000.

Mahle GmbH: *See—*

Lutz, Martin, 5,701,803, Cl. 92-208.000.

Mahone, William C.; Chandler, Bruce D.; Killeen, Joseph P.; and Garrett, David L., to Mobil Oil Corporation. Steel catenary riser system for marine platform. 5,702,205, Cl. 405-169.000.

Maier, Thomas: *See—*

Heinrich, Rudolf; Maier, Thomas; Kocur, Jean; and Schlicht, Rainer, 5,703,010, Cl. 504-116.000.

Maiers, Manfred: *See—*

Gollner, Wilhelm; and Maiers, Manfred, 5,703,345, Cl. 235-384.000.

Maignan, Jean: *See—*

Charpentier, Bruno; Vion, Michèle; Bernard, Bruno; and Maignan, Jean, 5,702,710, Cl. 424-401.000.

Mailloux, Jeff: *See—*

Hush, Glen; Seibert, Mike; Mailloux, Jeff; and Thomann, Mark R., 5,703,826, Cl. 365-230.050.

Main, William Eric, to Motorola, Inc. Current mirror circuit. 5,703,478, Cl. 323-315.000.

Majestic Products Company, The: *See—*

Champion, Mark R., 5,701,882, Cl. 126-523.000.

Majumdar, Gourab; Iwagami, Tooru; and Noda, Sukehisa, to Mitsubishi Denki Kabushiki Kaisha. Semiconductor power module. 5,703,399, Cl. 257-723.000.

Makhlouf, Samar; Pankow, Mark L.; Anderson, Byron E.; and Bean, Pamela, to Immtech International, Inc.; and Northwestern Univeristy. Immunoassay for identifying alcoholics and monitoring alcohol consumption. 5,702,904, Cl. 435-7.100.

Maki, Yasuhito: *See—*

Yasudà, Minoru; and Maki, Yasuhito, 5,703,386, Cl. 257-230.000.

Makimoto, Mitsuo: *See—*

Takahashi, Kazuaki; Hasegawa, Makoto; Makimoto, Mitsuo; and Fujimura, Munenori, 5,703,546, Cl. 333-204.000.

Makino, Keiichi: *See—*

Komatsuki, Masato; Ishii, Makoto; Adachi, Yukishige; Makino, Keiichi; and Miyazaki, Shinichi, 5,702,549, Cl. 152-548.000.

Makino, Mitsuaki: *See—*

Nakagawa, Koichi; Makino, Mitsuaki; and Kita, Yuichi, 5,703,270, Cl. 560-183.000.

Makita Corporation: *See—*

Itoh, Akihiro, 5,701,676, Cl. 30-388.000.

Makwana, Jitendra J.; Monteilh, Darryl F.; and Omon, Effiong A., to Motorola, Inc. Non-volatile memory cell and method of programming. 5,703,808, Cl. 365-185.270.

Malek, Mehrdad M.; Kadlic, Thomas P.; and Borsenik, Frank D., to Malek, Mehrdad M. Method and apparatus for playing mixture of Twenty-one and Baccarat using three, four or five player cards. 5,702,104, Cl. 273-292.000.

Malhotra, Shadi L., to Xerox Corporation. Recording sheets. 5,702,804, Cl. 428-195.000.

Maligad, Luciano J., Jr.: *See—*

Hansen, Louis J., Jr.; Maligad, Luciano J., Jr.; and Powell, Douglas H., 5,701,927, Cl. 137-271.000.

Malik, Aslam A.; and Archibald, Thomas G., to Aerojet-General Corporation. Fluorinated thermoset polyurethane elastomers prepared from polyether coprepolymers formed from mono-substitued fluorinated oxetane monomers and tetrahydrofuran. 5,703,194, Cl. 528-70.000.

Mallah, Mohamad; Linn, Horst; Saner, Niklaus; and Voirol, Peter, to Ciba Specialty Chemicals Corporation. Process and plant for the manufacture of solid castings from an essentially liquid reactive medium, and oven for heating an essentially liquid medium.. 5,703,343, Cl. 219-687.000.

Malley, Michael Timothy, to Eastman Kodak Company. Emulation of single line display with multi-line display driver. 5,703,609, Cl. 345-56.000.

Maloberti, Franco: *See—*

Rivoir, Roberto; Maloberti, Franco; and Torelli, Guido P., 5,703,588, Cl. 341-159.000.

Malofsky, Adam G.; Malofsky, Bernard M.; and Glassberg, Paul R., to Piccolino, LLC. Rollable child carrier structure. 5,702,120, Cl. 280-642.000.

Malofsky, Bernard M.: *See—*

Malofsky, Adam G.; Malofsky, Bernard M.; and Glassberg, Paul R., 5,702,120, Cl. 280-642.000.

Malone, Philip G.: *See—*

Bean, Dennis L.; Malone, Philip G.; Sykes, Melvin C.; Tom, Judy C.; and Walley, Donald M., 5,702,651, Cl. 264-34.000.

Malone, Robert Wallace: *See—*

Felgner, Philip L.; Wolff, Jon Asher; Rhodes, Gary H.; Malone, Robert Wallace; and Carson, Dennis A., 5,703,055, Cl. 514-44.000.

Maloney, John Michael: *See—*

Dunn, William Frank; Maloney, John Michael; Hooper, Michael Lynn; and Maas, Wayne David, 5,703,680, Cl. 356-35.500.

Malot, Michel: *See—*

Jolivet, Yannick; Malot, Michel; and Jamois, Didier, 5,703,148, Cl. 524-62.000.

Mammone, Richard J.; Farrell, Kevin; and Freeman, Brian, to Rutgers University. Fixed reference shift keying modulation for mobile radio telecommunications. 5,703,908, Cl. 375-278.000.

MAN Roland Druckmaschinen AG: *See—*

Keilhau, Theo, 5,702,341, Cl. 493-426.000.

Manchester Plastics, Inc.: *See—*

Sun, Andy Kwan-Leung; Chow, Bruce H. B.; and Panziera, Edoardo, 5,702,041, Cl. 224-539.000.

Mancini, Thomas: *See—*

Knipe, Richard E., Jr.; Jacob, Savarimuthu M.; and Mancini, Thomas, 5,701,922, Cl. 134-100.100.

Mandeville, W. Harry, III; and Holmes-Farley, Stephen Randall, to GelTex Pharmaceuticals. Iron-binding polymers for oral administration. 5,702,696, Cl. 424-78.120.

Mandeville, W. Harry, III; and Holmes-Farley, Stephen Randall, to GelTex Pharmaceuticals, Inc. Process for removing bile salts from a patient and compositions therefor. 5,703,188, Cl. 526-290.000.

Mando Machinery Corp.: *See—*

Cha, Hang-Byong, 5,701,794, Cl. 91-376.00R.

Maniar, Papu D.; Blumenthal, Roc; Klein, Jeffrey L.; and Wu, Wei. Method for forming a via in a semiconductor device. 5,702,981, Cl. 437-192.000.

Mankovitz, Roy J. Apparatus and methods for accessing information relating to radio and television programs. 5,703,795, Cl. 364-514.00R.

Mannesmann Aktiengesellschaft: *See—*

Paramonov, Vladimir A.; Tychinin, Anatolij I.; Moroz, Anatolij I.; Birger, Boris L.; Frommann, Klaus; Haupt, Werner; and Ottersbach, Walter, 5,702,528, Cl. 118-623.000.

Manning, Troy A.; Merritt, Todd; and Williams, Brett, to Micron Technology, Inc. DRAM having multiple column address strobe operation. 5,703,813, Cl. 365-189.050.

Manry, Edris Eileen: *See—*

Cusumano, Joseph Victor; Diana, William Daniel; Emert, Jacob; Gorda, Keith Raymond; Schlosberg, Richard H.; Young, David A.; Yezrielev, Albert I.; Eckstrom, William Bernard; Manry, Edris Eileen; and Keenan, Michael John, 5,703,256, Cl. 554-224.000.

Manser, Aloysius Hubertus; and Francois, Jacques, to Ciba Specialty Chemicals Corporation. Process for the production of an information carrier. 5,702,557, Cl. 156-275.700.

Mansvelt, Michael Joachim. Exercising device. 5,702,328, Cl. 482-96.000.

Marafino, Benedict J., Jr.: *See—*

Zimmerman, Robert; and Marafino, Benedict J., Jr., 5,702,697, Cl. 424-85.100.

Marchió , Fabio: *See—*

Merlo, Mauro; Cocetta, Franco; Marchió , Fabio; Grasso, Massimo; and Murari, Bruno, 5,703,476, Cl. 323-313.000.

Marchman, Herschel Maclyn: *See—*

Filas, Robert William; and Marchman, Herschel Maclyn, 5,703,979, Cl. 385-43.000.

Marchywka, Michael L.: *See—*

Pehrsson, Pehr E.; and Marchywka, Michael L., 5,702,586, Cl. 205-640.000.

Marcus, Barbara J.: *See—*

Yasis, Rafael M.; Uy, Rosa; Marcus, Barbara J.; and Kantner, Steven S., 5,702,753, Cl. 427-2.120.

Marcus, Edward J.: *See—*

Kreysler, William; Labesque, Serge; Jordan, Kurt; Luzaich, Mark; Colombo, David; Marcus, Edward J.; and Koosa, Richard, 5,701,706, Cl. 52-169.600.

Mardon, Jean-Paul; Sevenat, Jean; and Charquet, Daniel, to Framatome; and Compagnie Generale Des Matieres Nucléaires, both of. Zirconium-based alloy tube for a nuclear reactor fuel assembly and a process for producing such a tube. 5,702,544, Cl. 148-672.000.

Marik, Gregory C.: *See—*

Pothier, Albert; Marik, Gregory C.; and Givens, Derrick, 5,702,463, Cl. 623-20.000.

Marinco: *See—*

Deutsch, Peter K., 5,703,335, Cl. 181-150.000.

Mariplast S.p.A.: *See—*

Bottari, Marco, 5,702,063, Cl. 242-125.200.

Markisello, Frank. Dual function apparatus for opening and removing automotive side-bar ignition locks. 5,701,773, Cl. 70-465.000.

Markle, Dennis G.: *See—*

Resio, Donald T.; Briggs, Michael J.; Fowler, Jimmy E.; and Markle, Dennis G., 5,702,203, Cl. 405-26.000.

Marotta, Giulio; and Pasero, Eros, to Texas Instruments Incorporated. Voltage-current conversion circuit employing MOS transistor cells as synapses of neural network. 5,704,014, Cl. 395-24.000.

Marotta, Giulio: *See—*

Smayling, Michael C.; Santin, Giovanni; and Marotta, Giulio, 5,703,807, Cl. 365-185.030.

Marrian, Christie: *See—*

Peckerar, Martin C.; and Marrian, Christie, 5,703,373, Cl. 250-491.100.

Marschke, Kenneth P., Jr.: *See—*

Smith, Daniel; Willis, Bernard M.; Marschke, Kenneth P., Jr.; Littlewood, Barry; Schoen, Vulgens; Gucker, Carl; Nordmeyer, Michael; and Miklewicz, Thaddeus, 5,701,656, Cl. 29-558.000.

Marsh, Dennis R., to Owens-Illinois Labels Inc. Multiple bottle packages. 5,701,994, Cl. 206-203.000.

Marshall Industries Composites, Inc.: *See—*

Kaiser, Mark A., 5,702,816, Cl. 428-375.000.

Marshall, Janet Layne: *See—*

Caravajal, Gregory Stephen; and Marshall, Janet Layne, 5,703,027, Cl. 510-232.000.

Marshall, Trevor; Hui, Joseph Wing-Tak; and Wong, Thomas. Retractable power cord. 5,701,981, Cl. 191-12.400.

Martell, Charles R.; Cassidy, Michael J.; Ramsey, Anita K.; Liu, Zih-Fang; Ting, Chou Ling; and McKellar, H. Anderson, to Gerger Garment Technology, Inc. Automatic market making system and method. 5,703,781, Cl. 364-470.060.

Martensson, Nils Erik Vilhelm, to Nokia Mobile Phones Limited. Portable radio telephone with impulse movement or sound off-hook production and signalling. 5,703,931, Cl. 379-58.000.

Marthaler, David: *See—*

McKibben, Kenneth D.; Gould, Alan P.; Wuepper, Thomas E.; Minor, Daniel D.; Salgat, Mark T.; Marthaler, David; Speaks, Jackie M.; Macheske, Robert L.; Good, David; Gillette, Richard A.; Bond, Philip L.; Coyle, Donald C.; Rentfrow, Darrell; Stiens, Thomas O.; and Stevens, Larry M., 5,701,945, Cl. 164-130.000.

Martin, David Alan, to Becton, Dickinson and Company. Method for plasma processing. 5,702,770, Cl. 427-475.000.

Martin, Hans, to Behr GmbH & Co. Fluid friction clutch. 5,701,985, Cl. 192-58.681.

Martin, John P.; Skewes, Susan M.; and Raddatz, Russell E., to Incline Technologies Inc. Cleanser-impregnated cloths for cleansing the skin. 5,702,992, Cl. 442-123.000.

Martin Marietta Corporation: *See—*

Atashroo, M. Ali, 5,703,970, Cl. 382-278.000.

Martin, Phillip Charles; Shumate, Monroe W.; and Gregg, William Michael, to Schuller International, Inc. Extrudable microporous insulation. 5,703,147, Cl. 523-212.000.
Martin, Russel A.; Bruce, Richard H.; DaCosta, Victor M.; Fiske, Thomas G.; Lewis, Alan G.; Silverstein, Louis D.; Steemers, Hugo L.; Thompson, Malcolm J.; and Turner, William D., to Xerox Corporation. Universal display that presents all image types with high image fidelity. 5,703,621, Cl. 345-147.000.
Martin, Thomas J.; Moseley, Jane M.; Kemp, Bruce E.; and Wettenhall, Richard E. H., to University of Melbourne, The. Protein active in humoral hypercalcemia of malignancy-PTHrP. 5,703,207, Cl. 530-324.000.
Martin, Wallace Anthony; van der Meulen, Wybren; Menezes, Edgar V.; Renkema, Kornelis; Phillips, Robert B.; Lust, Victor; Wu, Jongliang; and Eshuis, Gerbrand, to Johnson & Johnson Vision Products, Inc. Molding arrangement to achieve short mold cycle time. 5,702,735, Cl. 425-548.000.
Martin, William John. Stealth virus nucleic acids and related methods. 5,703,221, Cl. 536-23.720.
Martinelli, Giuliano: *See*—
Endrös, Arthur; and Martinelli, Giuliano, 5,702,538, Cl. 136-258.000.
Martinelli, Paolo: *See*—
Perini, Umberto; Martinelli, Paolo; Golinelli, Elena; Musazzi, Sergio; Trespidi, Franco; and Pintus, Nice, 5,703,690, Cl. 356-436.000.
Martinez, Eulalia Puig. Installation for the preparation of bread dough portions. 5,701,806, Cl. 99-353.000.
Marubishi Oil Chemical Co., Ltd.: *See*—
Ohmae, Tadayuki; Hisada, Haruhiko; Hosoda, Kenichi; Yoshiya, Masahide; Komori, Yoshiyuki; Yamaguchi, Noboru; Fujiki, Tohru; and Yasuda, Noriyasu, 5,703,167, Cl. 525-207.000.
Marumoto, Kyoji: *See*—
Kondo, Masahito; and Marumoto, Kyoji, 5,703,993, Cl. 386-35.000.
Maruno, Susumu: *See*—
Kojima, Yoshihiro; Yamamoto, Hiroshi; Maruno, Susumu; and Shimeki, Yasuharu, 5,703,963, Cl. 382-197.000.
Maruoka, Kazuhisa; and Morota, Etsuko, to Sony Corporation. Video display in which a screen mode for different input signals is set based on stored information. 5,703,657, Cl. 348-554.000.
Maruyama, Kenya: *See*—
Mizutani, Kouichi; Tanaka, Takehiko; Maruyama, Kenya; Senda, Masanori; Takeuchi, Katsunao; and Sato, Toru, 5,701,867, Cl. 123-339.160.
Maruyama, Yasuo: *See*—
Nakajima, Akihisa; Yabusaki, Masami; Hirata, Shoichi; Yamaguchi, Kenichi; Fujiwara, Shiokazu; Maruyama, Yasuo; Uchiyama, Yasuyuki; and Takemoto, Eriko, 5,703,941, Cl. 379-201.000.
Maruyama, Yoichi, to Fuji Photo Film Co., Ltd. Silver halide photographic emulsion and photographic material using the same. 5,702,878, Cl. 430-567.000.
Mashimo, Kiyokazu; Ojima, Fumio; Ishii, Toru; and Nukada, Katsumi, to Fuji Xerox Co, Ltd. Method for making an image and a photosensitive body for liquid development. 5,702,856, Cl. 430-96.000.
Mashimo, Tohru: *See*—
Umeda, Hironori; Mashimo, Tohru; Hironaka, Kazuo; Nakahama, Tadamitsu; Yamane, Takakazu; Aizawa, Makoto; and Taniguchi, Yukifumi, 5,702,578, Cl. 204-486.000.
Mashio, Hideaki: *See*—
Murakami, Keiichi; Inamoto, Tadayoshi; Komuro, Hirokazu; Mashio, Hideaki; and Suzuki, Toshio, 5,703,630, Cl. 347-45.000.
Massachusetts Institute of Technology: *See*—
Menon, Murali M.; and Boudreau, Eric R., 5,703,964, Cl. 382-228.000.
Massaloux, Dominique, to France Telecom Etablissement autonome de droit public. Process and device for minimizing an error in a speech signal using a residue signal and a synthesized excitation signal. 5,704,002, Cl. 395-2.290.
Massey-Ferguson SA: *See*—
Lorriette, Patrick, 5,701,986, Cl. 192-70.120.
MasterCard International Inc.: *See*—
Hogan, Edward J., 5,704,046, Cl. 395-239.000.
Masters, William Cecil; and Kalker, William J., Jr., to Building Technologies, Inc. Tie connector for modular buildings. 5,701,715, Cl. 52-698.000.
Mastrodomenico, Giovanni: *See*—
Baroni, Andrea; Mastrodomenico, Giovanni; Taliercio, Michele; Capocelli, Piero; Carro, Luigi; and Varambally, Rajamohan, 5,703,821, Cl. 315-210.000.
Masuda, Kazuaki: *See*—
Arashima, Teruo; Kimura, Makiko; Kashino, Toshio; Sugitani, Hiroshi; Hattori, Yoshifumi; Ikeda, Masami; Saito, Asao; Masuda, Kazuaki; Saito, Akio; and Orikasa, Tsuyoshi, 5,703,632, Cl. 347-47.000.
Masunaga, Yoshifumi: *See*—
Miyagi, Takahiro; Takaya, Shigeru; and Masunaga, Yoshifumi, 5,703,864, Cl. 369-112.000.
Masusaki, Hiroshi: *See*—
Ishihara, Yoshio; Masusaki, Hiroshi; Wu, Shang-Qian; and Matsumoto, Koh, 5,703,365, Cl. 250-339.130.
Matcon Limited: *See*—
Semenenko, Ivan, 5,702,034, Cl. 222-143.000.
Materials Engineering And Development, Inc.: *See*—
Slemker, Tracy C., 5,702,489, Cl. 623-34.000.
Matharani, Michael A.: *See*—
Meli, Vincent A.; Matharani, Michael A.; Brzezinski, Ted A.; Shaft, David L.; and Urmanski, James L., 5,701,724, Cl. 53-451.000.
Mathews, Viju K.; Fazan, Pierre C.; and Jeng, Nanseng, to Micron Technology, Inc. Low-stress method of fabricating field-effect transistors having silicon nitride spacers on gate electrode edges. 5,702,986, Cl. 438-163.000.
Matias, Yossi; and Sahinalp, Suleyman Cenk, to Lucent Technologies Inc. Method and apparatus for data compression and decompression. 5,703,581, Cl. 341-67.000.
Matly, John Michael: *See*—
Little, Lewis Henry; Hopkins, Russell Bolin; and Matly, John Michael, 5,703,296, Cl. 73-756.000.
Matsubara, Naoki: *See*—
Yamamoto, Yuuri; Takahashi, Kenichi; Ohnishi, Hiroshi; Kunieda, Yoshinori; and Matsubara, Naoki, 5,703,913, Cl. 375-354.000.
Matsuda, Hidemi: *See*—
Itou, Takeo; and Matsuda, Hidemi, 5,703,431, Cl. 313-461.000.
Matsuda, Kiichi: *See*—
Nakagawa, Akira; Morimatsu, Eishi; Konoshima, Makiko; and Matsuda, Kiichi, 5,703,704, Cl. 359-9.000.
Matsuda, Osamu, to Sony Corporation. Integrated confocal optical pick-up head with a hologram and a polarizer mounted on each side of a transparent heat sink. 5,703,861, Cl. 369-110.000.
Matsuda, Yasuo: *See*—
Oishi, Kazumasa; Akasaka, Nobuhiro; Kakuta, Tatsuya; and Matsuda, Yasuo, 5,703,988, Cl. 385-128.000.
Matsuhashi, Kunihiko; Sodeyama, Hideo; and Inakoshi, Daisuke, to Seiko Epson Corporation; and King Jim Co., Ltd. Tape cartridges. 5,702,192, Cl. 400-613.000.
Matsui, Hirofumi: *See*—
Miyamoto, Masayuki; Iizuka, Kunihiko; Fujio, Mitsuhiko; and Matsui, Hirofumi, 5,703,503, Cl. 327-58.000.
Matsui, Shuichi: *See*—
Haseba, Yasuhiro; Miyazawa, Kazutoshi; Matsui, Shuichi; Kondo, Tomoyuki; Goto, Yasuyuki; Nakagawa, Etsuo; and Sawada, Shinichi, 5,702,641, Cl. 252-299.630.
Matsumiya, Masato: *See*—
Nishimura, Koichi; and Matsumiya, Masato, 5,703,814, Cl. 365-189.090.
Matsumoto, Gen: *See*—
Shigematsu, Yukifumi; and Matsumoto, Gen, 5,704,016, Cl. 395-27.000.
Matsumoto, Koh: *See*—
Ishihara, Yoshio; Masusaki, Hiroshi; Wu, Shang-Qian; and Matsumoto, Koh, 5,703,365, Cl. 250-339.130.
Matsumoto, Masashi; Saito, Yasushi; Ichihashi, Takao; and Yamada, Shuji, to Mita Industrial Co., Ltd. Method for checking a reloadable memory, memory checking device, and automatic data restoring device. 5,703,888, Cl. 371-51.100.
Matsumoto, Masashi: *See*—
Akiyama, Yuji; Morimura, Kazuhiko; Matsumoto, Masashi; Sugama, Sadayuki; Kamada, Masashi; and Ninomiya, Takayuki, 5,704,019, Cl. 395-101.000.
Matsumoto, Shimako: *See*—
Watanabe, Kazuyuki; Yanagihara, Hisayoshi; and Matsumoto, Shimako, 5,703,172, Cl. 525-323.000.
Matsumoto, Shogo; and Murata, Kiyohito, to Toyota Jidosha Kabushiki Kaisha. Clutch device. 5,701,983, Cl. 192-35.000.
Matsumoto, Takayuki; Matsumoto, Yasuomi; and Fujita, Hiroshi, to Sanden Corporation. Scroll-type fluid displacement apparatus having sealing means for central portions of the wraps. 5,702,241, Cl. 418-55.400.
Matsumoto, Takayuki; Ikeda, Tetsufumi; and Kojima, Akiyoshi, to Nippon Oil Co., Ltd. Spirally woven fabric, and prepreg and rotary body each using said spirally woven fabric therein. 5,702,795, Cl. 428-66.600.
Matsumoto, Toshihiko: *See*—
Imamura, Toshihide; Kadotani, Kanichi; Hayakashi, Bunji; Imaizumi, Hisaakira; Shakushi, Tetsuo; Matsumoto, Toshihiko; and Watanabe, Genichiro, 5,701,950, Cl. 165-222.000.
Matsumoto, Yasuomi: *See*—
Matsumoto, Takayuki; Matsumoto, Yasuomi; and Fujita, Hiroshi, 5,702,241, Cl. 418-55.400.
Matsumura, Yoshio; and Shimaji, Katsumi, to Dainippon Screen Mfg. Co., Ltd. Substrate processing apparatus. 5,701,627, Cl. 15-88.200.
Matsunaga, Hironari; Tsukumo, Kenichi; Wakisaka, Shinji; and Yamane, Akio, to Wakunaga Seiyaku Kabushiki Kaisha. Method and kit for detecting methicillin-resistant *Staphylococcus aureus* . 5,702,895, Cl. 435-6.000.
Matsunaga, Satoru; Hino, Masayuki; and Teramoto, Yosikiti, to Kureha Kagaku Kogyo Kabushiki Kaisha. Dielectrics for transfer sheet carrying member. 5,702,824, Cl. 428-500.000.
Matsuoka, Chikara; Watadani, Takeshi; Wakimoto, Kunihisa; and Kinoshita, Yukihiro. Cushion body structure of a car seat. 5,702,159, Cl. 297-452.480.
Matsushita Electric Industrial Co., Ltd.: *See*—
Hashimoto, Kazuhiko; Yoshiike, Nobuyuki; and Morinaka, Katsuya, 5,703,367, Cl. 250-342.000.
Hayashi, Hideki; Mizuno, Sadao; Ito, Noboru; Urairi, Kenichiro; and Komma, Yoshiaki, 5,703,856, Cl. 369-54.000.
Imai, Kiyoshi; Watanabe, Hideaki; Kinoshita, Hiromi; and Yokoyama, Dai, 5,701,662, Cl. 29-741.000.
Izawa, Yosuke; Tani, Masahiro; Okumura, Maoji; Nio, Yutaka; and Sato, Toshichika, 5,703,653, Cl. 348-445.000.
Kojima, Yoshihiro; Yamamoto, Hiroshi; Maruno, Susumu; and Shimeki, Yasuharu, 5,703,963, Cl. 382-197.000.
Kuwahara, Yasuhiro; Yamashita, Haruo; and Fukushima, Tsumoru, 5,703,968, Cl. 382-269.000.

Mori, Tsutomu; Fujimoto, Makoto; Goto, Yukie; and Egusa, Yo, 5,703,644, Cl. 348-363.000.
Ninomiya, Kazuki; Sumida, Keizo; Miyake, Jiro; and Nishiyama, Tamotsu, 5,703,800, Cl. 364-736.000.
Sakakima, Hiroshi; Satomi, Mitsuo; and Takeuchi, Hiroshi, 5,702,834, Cl. 428-692.000.
Takahashi, Kazuaki; Hasegawa, Makoto; Makimoto, Mitsuo; and Fujimura, Munenori, 5,703,546, Cl. 333-204.000.
Tsubata, Shintaro; and Nishiyama, Tamotsu, 5,703,802, Cl. 364-760.000.
Ueno, Makoto; Fujita, Katsutoshi; and Shimasaki, Tetsuo, 5,703,426, Cl. 310-258.000.
Yamamoto, Yuuri; Takahashi, Kenichi; Ohnishi, Hiroshi; Kunieda, Yoshinori; and Matsubara, Naoki, 5,703,913, Cl. 375-354.000.
Yasohara, Masahiro; Fujisaki, Yoshihiro; and Takada, Kazuyuki, 5,703,459, Cl. 318-808.000.
Yasumoto, Eiichi; Hatoh, Kazuhito; and Gamou, Takaharu, 5,702,838, Cl. 429-40.000.
Yuasa, Yasuhito; Hirota, Noriaki; Toyoda, Akinori; and Tatematsu, Hideki, 5,702,858, Cl. 430-106.600.
Matsuura, Masazumi, to Mitsubishi Denki Kabushiki Kaisha. Semiconductor device comprising an SiOF insulative film. 5,703,404, Cl. 257-758.000.
Matsuura, Tatsuo; and Inoue, Atsushi, to Honda Giken Kogyo Kabushiki Kaisha. Article storage structure for motor vehicle. 5,702,144, Cl. 296-37.130.
Matsuzaki, Isao: *See*—
Hayakawa, Yuuichi; Saitoh, Shinichi; Matsuzaki, Isao; and Kayama, Masayoshi, 5,703,739, Cl. 360-121.000.
Matteazzi, Paolo; and Basset, Diego. High-energy high-capacity oscillating ball mill. 5,702,060, Cl. 241-175.000.
Mattes, Ralf: *See*—
Höltke, Hans-Joachim; Seibl, Rudolf; Schmitz, Gudrun; Schöler, Hans Robert; Kessler, Christoph; and Mattes, Ralf, 5,702,888, Cl. 435-6.000.
Matthai, John T.; and Huyser, Richard F., to Stryker Corporation. Chuck and blade for powered medical handpiece. 5,702,415, Cl. 606-178.000.
Mattison, Richard C.: *See*—
Euteneuer, Charles L.; Mattison, Richard C.; Adams, Daniel O.; Hektner, Thomas R.; and Keith, Peter T., 5,702,364, Cl. 604-96.000.
Mattson, Ronald J.; and Catt, John D., to Bristol-Myers Squibb Company. Indanylpiperidines as melatonergic agents. 5,703,239, Cl. 546-205.000.
Mauchle, Felix, to Gema Volstatic AG. Powder feed device, especially for powder coating material. 5,702,209, Cl. 406-12.000.
Maudie, Theresa Ann: *See*—
Cripe, Jerry D.; Maudie, Theresa Ann; Reed, Charles L.; and Menchio, Michael P., 5,703,482, Cl. 324-158.100.
Maupin, Christopher James: *See*—
Rosenberg, Ronald Owen; Singh, Ajaib; Maupin, Christopher James; and Lombardo, Brian Scott, 5,703,193, Cl. 528-44.000.
Max Co., Ltd.: *See*—
Yoshie, Toru, 5,702,047, Cl. 227-131.000.
Max Rittenbaum, Inc.: *See*—
Rittenbaum, Jeffrey Alan, 5,702,195, Cl. 401-289.000.
Maxim, Rosemary S.; and Kasper, Hermann K., to Beekley Corporation. Radiographic marker system and method of making same. 5,702,128, Cl. 283-81.000.
Maxoptix Corporation: *See*—
Guo, Ann, 5,703,865, Cl. 369-116.000.
Maxtech Manufacturing Inc.: *See*—
Vasudeva, Kailash C., 5,701,935, Cl. 138-89.000.
May, John W.; Tombs, Thomas N.; and Tyagi, Dinesh, to Eastman Kodak Company. Multi-color method of toner transfer using non-marking toner and high pigment marking toner. 5,702,852, Cl. 430-47.000.
May, Jonathan J., to Latex Foam Products, Inc. Composite mattress and mattress topper having a latex foam core. 5,701,623, Cl. 5-739.000.
Mayer, Michael A.: *See*—
Damrau, Wayne A.; and Mayer, Michael A., 5,702,765, Cl. 427-356.000.
Mayhew, Eric; Ali, Shaukat; and Janoff, Andrew S., to Liposome Company, Inc., The. Hydrolysis-promoting hydrophobic taxane derivatives. 5,703,117, Cl. 514-449.000.
Maytal, Ben-Zion, to State Of Israel Ministry Of Defense, Rafael-Armaments. Fast changing heating-cooling device and method. 5,702,435, Cl. 607-104.000.
Mazanec, Terry J.; and Cable, Thomas L., to Standard Oil Company, The. Oxygen permeable mixed conductor membranes. 5,702,999, Cl. 501-152.000.
Mazda Motor Corporation: *See*—
Umeda, Hironori; Mashimo, Tohru; Hironaka, Kazuo; Nakahama, Tadamitsu; Yamane, Takakazu; Aizawa, Makoto; and Taniguchi, Yukifumi, 5,702,578, Cl. 204-486.000.
Mazurek, Carol; Nelson, Charles L.; Hodges, Steven C.; and Scheffel, James W., to Abbott Laboratories. Device for analysis of rapid agglutination of particles and method for using same. 5,702,953, Cl. 436-69.000.
McAllister-Lucas, Linda M.: *See*—
Beavo, Joseph A.; Corbin, Jackie D.; Ferguson, Kenneth M.; Francis, Sharron H.; Kadlecek, Ann; Loughney, Kate; McAllister-Lucas, Linda M.; Sonnenburg, William K.; and Thomas, Melissa K., 5,702,936, Cl. 435-196.000.
McAnalley, Bill H.; Carpenter, Robert H.; and McDaniel, Harley R., to Carrington Laboratories Inc. Uses of aloe products in the prevention and treatment of infections and infestations. 5,703,060, Cl. 514-54.000.
McArthur, Bruce: *See*—
Smith, Adlai H.; Hunter, Robert O., Jr.; McArthur, Bruce; Blair, Steven; and Wilkinson, Jim, 5,702,662, Cl. 264-400.000.
McAteer, Jeffrey Phillip, to Lucent Technologies Inc. Directional microphone assembly. 5,703,957, Cl. 381-92.000.
McCabe, Thomas: *See*—
Kanjo, Wajih; Smith, Eric; Demoise, Thomas J.; Girotti, Michael; McCabe, Thomas; Fessler, Charles B.; and Natschke, Scott, 5,701,974, Cl. 188-1.11R.
McCall, David: *See*—
Borseth, Donald; and McCall, David, 5,703,175, Cl. 525-340.000.
McCallops, John A.: *See*—
Warner, Donald R.; McCallops, John A.; and Estep, John M., 5,701,961, Cl. 173-15.000.
McCandliss, Robert. Coaxial ligamented hip prosthesis. 5,702,474, Cl. 623-22.000.
McCann, Roy A., to ITT Automotive Electrical Systems Inc. Rotary actuator. 5,703,555, Cl. 335-272.000.
McCarthy, Peter Andrew: *See*—
Deninno, Michael Paul; and McCarthy, Peter Andrew, 5,703,052, Cl. 514-26.000.
McClintock, Robert A., II. Applicator for applying a bleaching agent to teeth and method therefor. 5,702,251, Cl. 433-80.000.
McClish, Michael A.; Lynch, Marvin L.; Selfe, Margaret A.; Steinl, Gregory; and Remboski, Donald J., Jr., to Motorola Inc. Detrending engine positional data for rotating position encoders. 5,703,283, Cl. 73-116.000.
McClure, David C., to SGS-Thomson Microelectronics, Inc. Method and apparatus for test mode entry during power up. 5,703,512, Cl. 327-198.000.
McClure, Lawrence C.: *See*—
Ecker, Robert M.; McClure, Lawrence C.; and Wahlstrand, John D., 5,702,427, Cl. 607-28.000.
McCombie, Jay C.: *See*—
Thomas, Christopher P.; McCombie, Jay C.; Weber, Gregory T.; Ehlers, Jeffery C.; and Soltis, Dennis A., 5,701,865, Cl. 123-339.110.
McConnell, Kenneth G.; and Houser, Guy M., to Iowa State University Research Foundation. Method of evaluating the vibration characteristics of a sporting implement such as a golf club. 5,703,294, Cl. 73-579.000.
McCormick, Steve H.; and Pigott, William R., to United States of America, Energy. Continuous injection of an inert gas through a drill rig for drilling into potentially hazardous areas. 5,701,963, Cl. 175-215.000.
McCoy, Richard: *See*—
Hanson, Marvin L.; McCoy, Richard; and Krager, Jon L., 5,702,118, Cl. 280-491.500.
McCoy, William F.; and Hoots, John E., to Nalco Chemical Company. Method of use of compositions of biocides and fluorescent indicators to control microbial growth. 5,702,684, Cl. 424-10.300.
McCumber, Roger D.: *See*—
Lundstrom, Robert W.; McCumber, Roger D.; and Sannel, Benjamin H., 5,701,727, Cl. 53-569.000.
McCunn, F. Scott: *See*—
Hunsicker, Jeffrey C.; Verhoeven, John F.; and McCunn, F. Scott, 5,703,251, Cl. 549-410.000.
McCutchen, David, to Dodeca LLC. Immersive dodecaherdral video viewing system. 5,703,604, Cl. 345-8.000.
McDaniel, Harley R.: *See*—
McAnalley, Bill H.; Carpenter, Robert H.; and McDaniel, Harley R., 5,703,060, Cl. 514-54.000.
McDonald, Ian A.; Whitten, Jeffrey P.; and Cosford, Nicholas D., to SIBIA Neurosciences, Inc. Modulators of acetylcholine receptors. 5,703,100, Cl. 514-343.000.
McDonald, Steven: *See*—
Franchino, Anthony R.; and McDonald, Steven, 5,703,318, Cl. 89-37.070.
McDonnell Douglas Corporation: *See*—
Boehringer, Wilfred E.; Verhoeven, Teunes; and Hutz, William V., 5,701,801, Cl. 92-166.000.
DiChiara, Robert A., Jr.; and Butner, Steven C., 5,702,761, Cl. 427-181.000.
McElhenney, Jay J.: *See*—
Austin, Charles E.; Dafforn, Kenneth R.; and McElhenney, Jay J., 5,702,390, Cl. 606-48.000.
McEwen, Mark: *See*—
Fang, Yi; Carralero, Cesar; and McEwen, Mark, 5,703,909, Cl. 375-295.000.
McGarvey, John J.: *See*—
Larson, Carl O., Jr.; Smith, James S.; Chapman, John H.; Slimon, Scot A.; John, Trahan D.; Robert, J. Brozek; Franco, Alberto; McGarvey, John J.; Rosen, Marvin E.; and Pasque, Michael K., 5,702,430, Cl. 607-1.000.
McGee, David R.: *See*—
Berliner, David L; Erwin, Robert L.; and McGee, David R., 5,703,051, Cl. 514-21.000.
McGeorge, Gram: *See*—
Benore, Randolph C.; Gagliano, Joseph; Gibson, Shawn; Grosswiller, Leo J.; McGeorge, Gram; and Neidlinger, Donald, 5,701,828, Cl. 109-36.000.
McGill University: *See*—
Clokie, Cameron Malcolm Lang, 5,702,695, Cl. 424-78.080.
MCI Communications Corporation: *See*—
Brownmiller, Curtis; Bencheck, Mike; Tran, Minh; Branton, Robert; DeMoss, Mark; and Landon, Steve, 5,704,036, Cl. 395-183.190.

Raissyan, Anousheh; Wood, Kody Raymond; Jacobi, Michael Joseph; King, Linda S.; Seydel, Lee Chopek; Torbett, Michele Pauline; and Leonard, Robert Gary, 5,703,935, Cl. 379-88.000.
McKay, William F., to Danek Medical, Inc. Reinforced porous spinal implants. 5,702,449, Cl. 623-17.000.
McKean, Dennis Richard; and Renaldo, Alfred Floyd, to International Business Machines Corporation. Process for making a thin film magnetic head. 5,702,756, Cl. 427-127.000.
McKellar, H. Anderson: *See—*
Martell, Charles R.; Cassidy, Michael J.; Ramsey, Anita K.; Liu, Zih-Fang; Ting, Chou Ling; and McKellar, H. Anderson, 5,703,781, Cl. 364-470.060.
McKeon, Thomas M.: *See—*
Watson, Daniel M., Jr.; Mednick, Melvin; and McKeon, Thomas M., 5,702,283, Cl. 446-397.000.
McKibben, Kenneth D.; Gould, Alan P.; Wuepper, Thomas E.; Minor, Daniel D.; Salgat, Mark T.; Marthaler, David; Speaks, Jackie M.; Macheske, Robert L.; Good, David; Gillette, Richard A.; Bond, Philip L.; Coyle, Donald C.; Rentfrow, Darrell; Stiens, Thomas O.; and Stevens, Larry M., to CMI-Equipment & Engineering. Automated spin-casting system. 5,701,945, Cl. 164-130.000.
McLean, Iain Alan: *See—*
Ainsworth, Adam Kenneth; Glenville, Reginald Paul; and McLean, Iain Alan, 5,703,377, Cl. 250-559.450.
McLelland, Douglas M.; Wolfe, Paul T.; and Heim, Richard D., to BTR Antivibration Systems, Inc. Fluid damped bushing with encapsulated window metal. 5,702,094, Cl. 267-140.120.
McNeil, John R.; Naqvi, S. Sohail H.; and Wilson, Scott R., to Bio-Rad Laboratories, Inc. Lens scatterometer system employing source light beam scanning means. 5,703,692, Cl. 356-445.000.
McNeil-PPC, Inc.: *See—*
Cottenden, Alan M., 5,702,381, Cl. 604-385.100.
Iskra, Michael J.; and Wislinski, Martin, 5,702,553, Cl. 156-203.000.
McPherson, Roger W.; Shrive, Nigel G.; Damson, Erich; Frank, Cyril B.; Lhenen, Fred; and Schachar, Norman S., to University Technologies International Inc. Tissue softness probe. 5,701,913, Cl. 128-774.000.
McRuer, Robert N.: *See—*
Goodson, David B.; and McRuer, Robert N., 5,702,244, Cl. 431-2.000.
MCT Communications Corp.: *See—*
Lucas, Gary L.; Keller, Kathleen E.; Agatston, David; and Caplan, Drew, 5,703,938, Cl. 375-112.000.
McWhorter, William W.: *See—*
Itoh, Noriie; Kunihara, Mineo; Kushida, Hiroshi; McWhorter, William W.; Nomura, Syunji; Ozawa, Kazunori; Taniguchi, Mikio; and Tsuzuki, Kazuo, 5,703,071, Cl. 514-218.000.
Meadox Medicals, Inc.: *See—*
Zhong, Sheng-Ping, 5,702,754, Cl. 427-2.120.
Mechanical Technology Inc.: *See—*
Dorman, Richard A., 5,703,424, Cl. 310-90.500.
Meco Equipment Engineers B.V.: *See—*
Rischke, Jorg Werner; and van Sprang, Wilhelmus Gijsbertus Leonardus, 5,702,583, Cl. 205-82.000.
Medeiros, Fernando: *See—*
Russell, William E.; Hall, Barrie G.; and Medeiros, Fernando, 5,702,001, Cl. [illegible].
Medevelop AB: *See—*
Brånemark, Per-Ingvar, 5,702,443, Cl. 623-11.000.
Brånemark, Per-Ingvar, 5,702,445, Cl. 623-11.000.
MedicineLodge, Inc.: *See—*
Goble, E. Marlowe; Luman, David P.; Chervitz, Alan; Story, C. Brad; and Gundlapalli, Ramarao, 5,702,397, Cl. 606-72.000.
Mednick, Melvin: *See—*
Watson, Daniel M., Jr.; Mednick, Melvin; and McKeon, Thomas M., 5,702,283, Cl. 446-397.000.
Medtronic Inc.: *See—*
Baudino, Michael D., 5,702,437, Cl. 607-116.000.
Cahalan, Patrick T.; Verhoeven, Michel; Hendriks, Marc; and Cahalan, Linda, 5,702,818, Cl. 428-409.000.
Ecker, Robert M.; McClure, Lawrence C.; and Wahlstrand, John D., 5,702,427, Cl. 607-28.000.
King, Gary William, 5,702,429, Cl. 607-46.000.
Nelson, Timothy S., 5,702,372, Cl. 604-264.000.
Sasamine, Kazuo; and Rupp, Garry E., 5,701,911, Cl. 128-772.000.
Meeker, Delbert Brent, to United States of America, Navy. Infrared projector countermeasure system. 5,703,314, Cl. 89-1.110.
Meeks, Patti A.: *See—*
Stedman, Donald H.; and Meeks, Patti A., 5,702,954, Cl. 436-103.000.
Meester, David Jeffrey, to FMC Corporation. Two stage shaker. 5,702,301, Cl. 460-144.000.
Mehta, Ashok D.: *See—*
Kay, Stanley E.; Kaul, Pradeep; Parr, Michael E.; Avis, Graham; Corrigan, John E., III; Wendling, Daniel; and Mehta, Ashok D., 5,703,881, Cl. 370-468.000.
Mehta, Devendra V.: *See—*
Struthers, Ralph C.; and Mehta, Devendra V., 5,702,444, Cl. 623-11.000.
Mehuys, David G.: *See—*
Welch, David F.; Mehuys, David G.; and Scifres, Donald R., 5,703,897, Cl. 372-50.000.
Meier, Reinhold, to MTU Motoren- und Turbinen-Union Muenchen GmbH. Repair method for lengthening turbine blades. 5,701,669, Cl. 29-889.100.
Meixner, Hubert; Reuther, Wolfgang; and Königstein, Volker, to BASF Aktiengesellschaft. Additives for plastics, in particular for PVC. 5,702,517, Cl. 106-316.000.
Meli, Vincent A.; Matharani, Michael A.; Brzezinski, Ted A.; Shaft, David L.; and Urmanski, James L., to Schreiber Fodds, Inc. Method and apparatus for forming and hermetically sealing slices of food items. 5,701,724, Cl. 53-451.000.
Melkent, Tony: *See—*
Carls, Thomas A.; Melkent, Tony; Whiteside, Leo A.; and Vendrely, Tim, 5,702,460, Cl. 623-20.000.
Meltzer, Peter C.: *See—*
Sharpe, Richard J.; Arndt, Kenneth A.; Galli, Stephen J.; Meltzer, Peter C.; Razdan, Raj K.; and Sard, Howard P., 5,703,088, Cl. 514-278.000.
Memon, Zaffar Iqbal: *See—*
Birch, Stephen Michael; Gavrel, Gerard Michel; and Memon, Zaffar Iqbal, 5,701,667, Cl. 29-852.000.
Menchen, Steven Michael: *See—*
Grossman, Paul David; Fung, Steven; Menchen, Steven Michael; Woo, Sam Lee; and Winn-Deen, Emily Susan, 5,703,222, Cl. 536-24.300.
Menchio, Michael P.: *See—*
Cripe, Jerry D.; Maudie, Theresa Ann; Reed, Charles L.; and Menchio, Michael P., 5,703,482, Cl. 324-158.100.
Menezes, Edgar V.: *See—*
Martin, Wallace Anthony; van der Meulen, Wybren; Menezes, Edgar V.; Renkema, Kornelis; Phillips, Robert B.; Lust, Victor; Wu, Jongliang; and Eshuis, Gerbrand, 5,702,735, Cl. 425-548.000.
Mengshoel, Hans Chr.; and Rykken, Oddvin. Arrangement in structural elements, for example for use in furniture. 5,702,158, Cl. 297-445.100.
Menicon Co., Ltd.: *See—*
Hiratani, Haruyuki; Nakada, Kazuhiko; Yamazaki, Toshio; and Ichinohe, Shoji, 5,703,143, Cl. 523-107.000.
Menon, Jay, to Kinetikos Medical Incorporated. Prosthetic wrist implant and related method of implantation. 5,702,470, Cl. 623-21.000.
Menon, Murali M.; and Boudreau, Eric R., to Massachusetts Institute of Technology. Pattern recognition system with statistical classification. 5,703,964, Cl. 382-228.000.
Mentor Graphics Corporation: *See—*
Dhar, Sanjay, 5,703,798, Cl. 364-578.000.
Menz, Gerhard: *See—*
Funk, Bernhard; and Menz, Gerhard, 5,702,136, Cl. 292-336.300.
Meraldi, Jean-Paul; Ribiere, Joel; and Almon, Jean-Jacques, to Michelin Recherche et Technique, S.A. Article reinforced by aramid monofilament having a slightly structured skin. 5,702,547, Cl. 152-451.000.
Mercereau, Steven Frank. Extendable device for enclosing cutting surfaces of surgical instruments. 5,702,369, Cl. 604-192.000.
Merck & Co., Inc.: *See—*
Jayasuriya, Hiranthi; Lingham, Russell B.; Pelaez, Fernando; Sanchez, Manuel; Silverman, Keith C.; Singh, Sheo Bux; and Zink, Deborah L., 5,703,067, Cl. 514-179.000.
Morris, Sandra A.; Curotto, James E.; Bills, Gerald F.; Dreikorn, Sarah J.; Streicher, Stanley L.; Zink, Deborah L.; Thompson, John R.; Basilio, Angela; Pelaez, Fernando; Diez, Maria Teresa; and Vicente, Francisca, 5,702,929, Cl. 435-118.000.
deSolms, S. Jane; and Graham, Samuel L., 5,703,241, Cl. 548-314.700.
Merck Patent Gesellschaft Mit Beschrankter Haftung: *See—*
Junge, Michael; and Reiffenrath, Volker, 5,702,640, Cl. 252-299.010.
Merck Patent Gesellschaft mit ceschrankter Haftung: *See—*
Nitta, Katuhisa; Shau, Tan Ming; and Sugahara, Jun, 5,702,519, Cl. 106-442.000.
Vogt, Reiner; Bernhard, Klaus; and Pfaff, Gerhard, 5,702,518, Cl. 106-439.000.
Merkel, Ronald F. Pleating machine and method. 5,702,037, Cl. 223-30.000.
Merle, Jean-Pierre; Lassalle, Martine; Bernoux, Franck; and Adda, Maurice, to Aerospatiale Societe Nationale Industrielle. Sight-tracking viewing device. 5,703,643, Cl. 348-341.000.
Merlo, Mauro; Cocetta, Franco; Marchió , Fabio; Grasso, Massimo; and Murari, Bruno, to SGS-Thomson Microelectronics, S.r.l. Reference voltage generator, having a double slope temperature characteristic, for a voltage regulator of an automotive alternator. 5,703,476, Cl. 323-313.000.
Mermelstein, Lois D.; and Witte, Kendall C., to Dell USA, L.P. Computer system including protected graphics display control signal sequencing. 5,703,629, Cl. 345-213.000.
Mero-Raustuktur GmbH & Co.: *See—*
Landes, Albert, 5,701,704, Cl. 52-64.000.
Merrell Pharmaceuticals Inc.: *See—*
Salituro, Francesco G.; and Baron, Bruce M., 5,703,107, Cl. 514-381.000.
Merrill, Sonya; Ayer, Atul Devdatt; Chadha, Navjot; and Kuczynski, Anthony L., to Alza Corporation. Hydromorphone therapy. 5,702,725, Cl. 424-472.000.
Merritt, Carey M., to Niagara Mohawk Power Corporation. Water retrieval from aqueous mixture of organic phosphates. 5,702,609, Cl. 210-669.000.
Merritt, Todd: *See—*
Manning, Troy A.; Merritt, Todd; and Williams, Brett, 5,703,813, Cl. 365-189.050.
Merry, Richard P.: *See—*
Tompkins, Thomas L.; Shirk, Ryan C.; Schroeer, Steven C.; Merry, Richard P.; Ista, Troy K.; and Bloom, Richard L., 5,702,494, Cl. 55-498.000.
Mersali, Boumédienne: *See—*

Ghirardi, Frédéric; Mersali, Boumédienne; Bruno, Adrien; and Giraudet, Louis, 5,703,895, Cl. 372-50.000.
Meshberg, Emil; Miller, Philip; and Schultz, Robert, to Emson, Inc. Dispensing pump with priming feature. 5,702,031, Cl. 222-1.000.
Mesotes Co. Ltd.: *See—*
Hujimaki, Kumiko, 5,702,423, Cl. 607-2.000.
Mesters, Carolus Matthias Anna Maria: *See—*
Evans, Wayne E.; and Mesters, Carolus Matthias Anna Maria, 5,703,253, Cl. 549-536.000.
Meta Holding Corp.: *See—*
Chu, John B.; Ju, Paul P.; and Wang, Ynjiun P., 5,702,059, Cl. 235-462.000.
Metallgesellschaft Aktiengesellschaft: *See—*
Hillrichs, Eilhard; Kienberger, Manfred; and Sander, Ulrich, 5,702,585, Cl. 205-468.000.
Metanetics Corporation: *See—*
Meyerson, Robert F.; and Wang, Ynjiun P., 5,703,349, Cl. 235-472.000.
Metricom, Inc.: *See—*
Casebolt, Matthew Phillip, 5,703,602, Cl. 343-702.000.
Métrope, Jacques, to Heidelberger Druckmaschinen AG; and Heidelberg Harris SA. Device for changing printing forms or plates. 5,701,822, Cl. 101-477.000.
Mett, Frank: *See—*
Kiesele, Herbert; Chrzan, Rigobert; and Mett, Frank, 5,702,576, Cl. 204-415.000.
Mettler, Stephen Clement; and White, Ian Arthur, to Lucent Technologies Inc. Optical integrated circuit having passively aligned fibers and method using same. 5,703,973, Cl. 385-14.000.
Metzler, Michael Eugene; and Saller, Louis Richard, to Otologics LLC. Directionally-controllable mounting apparatus. 5,702,342, Cl. 600-25.000.
Meyer, Jacques, to SGS-Thomson Microelectronics S.A. Circuit for detecting the locked condition of PSK or QAM demodulators. 5,703,526, Cl. 329-304.000.
Meyers, Mark M., to Eastman Kodak Company. Autofocus module having a diffractively achromatized toroidal lens. 5,703,351, Cl. 250-201.200.
Meyers, Torin T.: *See—*
Hunt, William C.; and Meyers, Torin T., 5,703,683, Cl. 356-301.000.
Meyerson, Robert F.; and Wang, Ynjiun P., to Metanetics Corporation. Portable data collection device with two dimensional imaging assembly. 5,703,349, Cl. 235-472.000.
Michelin Recherche et Technique, S.A.: *See—*
Meraldi, Jean-Paul; Ribiere, Joel; and Almon, Jean-Jacques, 5,702,547, Cl. 152-451.000.
Michioka, Chikara: *See—*
Fukao, Tadashi; Chiba, Akira; and Michioka, Chikara, 5,703,423, Cl. 310-90.500.
Miciano, Benjamin L.: *See—*
Mueller, Donald L.; and Miciano, Benjamin L., 5,704,038, Cl. 395-185.080.
Micro Test, Inc.: *See—*
Racioppi, Stephen G.; and Brinker, James P., 5,702,944, Cl. 435-253.600.
Micro Therapeutics, Inc.: *See—*
Evans, Scott; Perl, John, II; and Greff, Richard, 5,702,361, Cl. 604-53.000.
Microchip Technology Incorporated: *See—*
Hinkle, Stephen C.; and Hull, Richard, 5,703,416, Cl. 307-89.000.
Hull, Richard; and Yach, Randy L., 5,703,809, Cl. 365-185.250.
MicroClock Incorporated: *See—*
Bland, Christopher J.; Gazda, Jan; and Olsen, Barry E., 5,703,537, Cl. 331-1.00A.
Gazda, Jan; Bal, Jagdeep; and Bland, Christopher J., 5,703,540, Cl. 331-16.000.
Microelectronics & Computer Technology Corp.: *See—*
Kumar, Nalin; and Xie, Chenggang, 5,703,435, Cl. 313-495.000.
Micrografx, Inc.: *See—*
Schanel, Scott; and Hogsett, Gerald R., II, 5,704,028, Cl. 395-140.000.
MicroModule Systems Inc.: *See—*
Mok, Sammy L., 5,703,753, Cl. 361-715.000.
Micron Technology, Inc.: *See—*
Brunelli, Thad; Garrison, Gina; and Van Buren, Wade, 5,702,292, Cl. 451-41.000.
Hush, Glen; Seibert, Mike; Mailloux, Jeff; and Thomann, Mark R., 5,703,826, Cl. 365-230.050.
Jost, Mark; and Dennison, Charles, 5,702,990, Cl. 438-618.000.
Manning, Troy A.; Merritt, Todd; and Williams, Brett, 5,703,813, Cl. 365-189.050.
Mathews, Viju K.; Fazan, Pierre C.; and Jeng, Nanseng, 5,702,986, Cl. 438-163.000.
Schuegraf, Klaus F.; and Ahmad, Aftab, 5,702,976, Cl. 437-67.000.
Vo, Huy Thanh, 5,703,500, Cl. 326-71.000.
Micronics Computers Inc.: *See—*
Zhu, Xiao Feng, 5,703,760, Cl. 361-785.000.
Micropump, Inc.: *See—*
Pieters, Ferdinandus A., 5,702,234, Cl. 417-53.000.
Mierosoft Corporation: *See—*
Heckerman, David E.; Breese, John S.; Horvitz, Eric; and Chickering, David Maxwell, 5,704,017, Cl. 395-61.000.
Heckerman, David E.; Geiger, Dan; and Chickering, David M., 5,704,018, Cl. 395-75.000.
Heddle, Robert M.; Yerrace, Frank Dominic; and Dahl, Geoff, 5,703,794, Cl. 364-514.00R.
Middlemiss, David: *See—*
Armour, Duncan Robert; Evans, Brian; Middlemiss, David; Naylor, Alan; Pegg, Neil Anthony; Vinader, Maria Victoria; Giblin, Gerard Martin Paul; Hubbard, Tania; Hann, Michael Menteith; Lewell, Xiao-Qing; and Watson, Stephen Paul, 5,703,240, Cl. 546-210.000.
Miescher, Stefan: *See—*
Hasler, Roland; and Miescher, Stefan, 5,703,302, Cl. 73-865.800.
Migachyov, Valery: *See—*
Kulisz, Andre A.; and Migachyov, Valery, 5,701,916, Cl. 128-885.000.
Mihayashi, Keiji; and Ryoke, Katsumi, to Fuji Photo Film Co., Ltd. Abrasive tape for magnetic information reading apparatus for photographic use, abrasive tape package, and a method for cleaning the apparatus. 5,702,800, Cl. 428-144.000.
Mii, Yuh-Jier: *See—*
Ying, Shu-Lan; Huang, Yuan-Chang; Chen, Jue-Jye; and Mii, Yuh-Jier, 5,702,956, Cl. 437-8.000.
Mikami, Ichizou; Komasaka, Toshio; Niimi, Masahiro; and Miyamoto, Takashi, to Fujitsu Limited. Method of performing self-diagnosing hardware, software and firmware at a client node in a client/server system. 5,704,031, Cl. 395-182.020.
Mikami, Koichi: *See—*
Tarumoto, Norihiro; Miyashita, Hiroyuki; Iimura, Yukio; and Mikami, Koichi, 5,702,847, Cl. 430-5.000.
Mikata, Youichi; Ishihara, Katsunori; and Okumura, Katsuya, to Kabushiki Kaisha Toshiba. Method of making doped semiconductor film having uniform impurity concentration on semiconductor substrate and apparatus for making the same. 5,702,529, Cl. 118-722.000.
Mikata, Yuuichi, to Kabushiki Kaisha Toshiba. Apparatus for forming a thin film. 5,702,531, Cl. 118-697.000.
Mikelsons, Valdis: *See—*
Eisele, John F.; Mikelsons, Valdis; Lehman, Gaye K.; Wang, Paul J.; and Brandt, Patricia J. A., 5,702,803, Cl. 428-195.000.
Mikl, Rudolf: *See—*
Polgar, Tibor; and Mikl, Rudolf, 5,703,554, Cl. 335-229.000.
Miklewicz, Thaddeus: *See—*
Smith, Daniel; Willis, Bernard M.; Marschke, Kenneth P., Jr.; Littlewood, Barry; Schoen, Vulgens; Gucker, Carl; Nordmeyer, Michael; and Miklewicz, Thaddeus, 5,701,656, Cl. 29-558.000.
Millan, Mark: *See—*
Lavielle, Gilbert; Muller, Olivier; Millan, Mark; and Audinot, Valérie, 5,703,070, Cl. 514-212.000.
Millberg, Brian A.: *See—*
Arts, Gene H.; Carr, Jan E.; Kuk-Nagle, Karen T.; Lontine, Michael D.; and Millberg, Brian A., 5,702,387, Cl. 606-45.000.
Millennium Pharmaceuticals, Inc.: *See—*
Tartaglia, Louis Anthony, 5,702,902, Cl. 435-6.000.
Miller, Christopher J.: *See—*
Miller, Judith A.; and Miller, Christopher J., 5,702,038, Cl. 224-409.000.
Miller, Frank Troy: *See—*
Watterson, Scott R.; Dalebout, William T.; and Miller, Frank Troy, 5,702,325, Cl. 482-54.000.
Miller, James R., to Precision Research & Development. Tucking device for wire weaving machines and method. 5,701,936, Cl. 140-24.000.
Miller, Joseph; Pearson, Derek P. A.; and Pitcher, Philip G., to Johnson Matthey Public Limited Company. Magneto-optical recording materials system. 5,702,830, Cl. 428-611.000.
Miller, Judith A.; and Miller, Christopher J. Organizer bag for strollers. 5,702,038, Cl. 224-409.000.
Miller, Nathan West: *See—*
Tayloe, Daniel Richard; Miller, Nathan West; and Frederick, Robert Thomas, 5,703,595, Cl. 342-175.000.
Miller, Philip: *See—*
Meshberg, Emil; Miller, Philip; and Schultz, Robert, 5,702,031, Cl. 222-1.000.
Miller, William J.; and Nolan, Daniel A., to Corning Incorporated. Interferometric switch. 5,703,975, Cl. 385-16.000.
Millhimes, Wayne Leroy, to Whitaker Corporation, The. Electrical connector and terminal therefor. 5,702,257, Cl. 439-79.000.
Milliken Research Corporation: *See—*
Parker, Norman Marion, IV, 5,701,846, Cl. 119-526.000.
Mills, James A.: *See—*
Williamson, Dan; Mills, James A.; and Ryan, John J., III, 5,701,957, Cl. 166-297.000.
Milosevic, Milan: *See—*
Sting, Donald W.; and Milosevic, Milan, 5,703,366, Cl. 250-341.200.
Mimura, Hideki: *See—*
Kitamura, Tetsuya; and Mimura, Hideki, 5,703,997, Cl. 386-97.000.
Min, Sung-Ki, to Integrated Device Technology, Inc. Current source responsive to supply voltage variations. 5,703,497, Cl. 326-33.000.
Minami, Masayoshi: *See—*
Kohno, Yasushi; Minami, Masayoshi; and Minamiguchi, Riichi, 5,701,700, Cl. 47-57.600.
Minamiguchi, Riichi: *See—*
Kohno, Yasushi; Minami, Masayoshi; and Minamiguchi, Riichi, 5,701,700, Cl. 47-57.600.
Minamino, Katsuki: *See—*
Watari, Masao; Ishii, Kazuo; Kato, Yasuhiko; Ogawa, Hiroaki; Omote, Masanori; Watanabe, Kazuo; and Minamino, Katsuki, 5,704,013, Cl. 395-23.000.

Minaskanian, Gevork: *See*—
Peck, James V.; Minaskanian, Gevork; and Sleev, Mark C., 5,703,104, Cl. 514-369.000.
Minato Company, Ltd.: *See*—
Ohama, Chiaki, 5,703,152, Cl. 524-435.000.
Minato, Tsuyoshi: *See*—
Sakakibara, Keisuke; Murasaki, Ryuichi; Daiyogo, Shinichi; and Minato, Tsuyoshi, 5,702,797, Cl. 428-100.000.
Minemura, Hiroyuki: *See*—
Miyauchi, Yasushi; Terao, Motoyasu; Hirotsune, Akemi; Minemura, Hiroyuki; and Miyamoto, Harukazu, 5,703,867, Cl. 369-275.300.
Ming Wei Industrial Co., Ltd.: *See*—
Hsieh, Chun-Kun, 5,702,134, Cl. 292-92.000.
Ming-Tsung, Liu; Hsu, Bill Y. B.; Chung, Hsien-Dar; and Wu, Der-Yuan, to United Microelectronics Corporation. Bonding pad structure and method thereof. 5,703,408, Cl. 257-784.000.
Minnesota Mining and Manufacturing Company: *See*—
Barcock, Richard A., 5,702,879, Cl. 430-569.000.
Effing, Jochem; Gruhlke, Eberhard; Godbey, Kristin; and Welsing, Wolfgang, 5,702,720, Cl. 424-448.000.
Eisele, John F.; Mikelsons, Valdis; Lehman, Gaye K.; Wang, Paul J.; and Brandt, Patricia J. A., 5,702,803, Cl. 428-195.000.
Hagen, Donald F.; Fung, Simon S.; and Hansen, Paul E., 5,702,610, Cl. 210-670.000.
Johnson, Gilbert C.; Radcliffe, Marc D.; Savu, Patricia M.; Snustad, Daniel C.; and Spawn, Terence D., 5,702,637, Cl. 252-299.610.
Kipke, Cary A., 5,702,250, Cl. 433-37.000.
Okuma, Kiyoshi; Saegusa, Koichiro; and Shiono, Ryozo, 5,702,556, Cl. 156-261.000.
Pellerite, Mark J.; Rich, Larry D.; and Sanders, James F., 5,702,509, Cl. 106-2.000.
Seaver, Albert E.; Scheel, Lyle N.; Erickson, Luther E.; and Danielson, Daniel R., 5,702,527, Cl. 118-410.000.
Taylor, Phillip A.; Florczak, Jeffrey M.; Peterson, Mark A.; Iverson, Paul R.; Skorjanec, Joseph; and Lorentz, Robert D., 5,702,876, Cl. 430-[illegible].
Tompkins, Thomas L.; Shirk, Ryan C.; Schroeck, Steven C.; Merry, Richard P.; Ista, Troy K.; and Bloom, Richard L., 5,702,494, Cl. [illegible].
Yasis, Rafael M.; Uy, Rosa; Marcus, Barbara J.; and Kantner, Steven S., 5,702,753, Cl. 427-2.120.
Minnick, Jeffrey Alan: *See*—
Ethington, Bryan Leslie; Gostomski, John Francis; Minnick, Jeffrey Alan; and Songer, Christopher Mark, 5,704,022, Cl. 395-115.000.
Minolta Co., Ltd.: *See*—
Morikawa, Takeshi, 5,703,693, Cl. 358-296.000.
Minor, Daniel D.: *See*—
McKibben, Kenneth D.; Gould, Alan P.; Wuepper, Thomas E.; Minor, Daniel D.; Salgat, Mark T.; Marthaler, David; Speaks, Jackie M.; Macheske, Robert L.; Good, David; Gillette, Richard A.; Bond, Philip L.; Coyle, Donald C.; Rentfrow, Darrell; Stiens, Thomas O.; and Stevens, Larry M., 5,701,945, Cl. 164-130.000.
Minoshima, Norimoto; and Odachi, Yasuharu, to Kabushiki Kaisha Toyoda Jidoshokki Seisakusho. Inductive coupler for electric vehicle charger. 5,703,461, Cl. 320-2.000.
Minot, Christophe: *See*—
Le Person, Henri; Minot, Christophe; and Palmier, Jean-François, 5,703,379, Cl. 257-21.000.
Minot, Mark: *See*—
Carlson, Gary D.; and Minot, Mark, 5,701,908, Cl. 128-713.000.
Miscio, Raymond. Device for filling a hole in an ice rink surface. 5,701,690, Cl. 37-219.000.
Misdom, Johannes A. C.: *See*—
Teuling, Dirk J. A.; and Misdom, Johannes A. C., 5,703,444, Cl. 315-371.000.
Mishra, Satchidanand, to Xerox Corporation. Detection of charge deficient spot susceptibility. 5,703,487, Cl. 324-456.000.
Miska, Richard A.; and Willcock, William T., to AT&T Corp. Personal mobile communication system with call bridging. 5,703,930, Cl. 379-57.000.
Miskewitz, Regina M., to Church & Dwight Co., Inc. Chewing gum product with plaque-inhibiting benefits. 5,702,687, Cl. 424-52.000.
Missenard, Gilles: *See*—
Henry, Patrick; Lapresle, Philippe; and Missenard, Gilles, 5,702,394, Cl. 606-61.000.
Mistopoulos, James E.: *See*—
Vaughan, Robert A.; Christian, Willard C.; Zimmer, John P.; and Mistopoulos, James E., 5,702,148, Cl. 296-146.900.
Mita Industrial Co., Ltd.: *See*—
Matsumoto, Masashi; Saito, Yasushi; Ichihashi, Takao; and Yamada, Shuji, 5,703,888, Cl. 371-51.100.
Nagai, Takashi; Honda, Nobuyasu; Iida, Tomohide; Akiyama, Toshiaki; Kuramashi, Koji; and Toda, Asao, 5,702,857, Cl. 430-101.000.
Mita, Seiichi: *See*—
Kirino, Fumiyoshi; Toda, Tsuyoshi; Ide, Horishi; Sugiyama, Hisataka; Saito, Atsushi; Tsuchinaga, Hiroyuki; Maeda, Takeshi; Kugiya, Fumio; Kaku, Toshimitsu; Mita, Seiichi; Shigematsu, Kazuo; and Ouchi, Yasuhide, 5,703,855, Cl. 369-54.000.
Mitani, Kiyoshi; and Wijaranakula, Witiwat, to SEH America, Inc. Method for forming epitaxial semiconductor wafer for CMOS integrated circuits. 5,702,973, Cl. 437-57.000.
Mitate, Takehito; and Nishijima, Motoaki, to Sharp Kabushiki Kaisha. Nonaqueous secondary battery. 5,702,843, Cl. 429-218.000.
Mitchell, John R., to Venture Innovations, Inc. Shaving cream dispensing razor. 5,701,674, Cl. 30-41.000.
Mitchell, Michael L.; Fite, Barry Alan; Saito, Akiya; and New, Anthony C., to Sony Corporation; and Digital Audio Disc Corporation. System for encoding a glass master to enable detection of a counterfeit optical CD-ROM. 5,703,858, Cl. 369-58.000.
Mitchell, Nancy G.: *See*—
Shipston, Adele C.; Langen, Joseph W.; and Mitchell, Nancy G., 5,702,771, Cl. 427-491.000.
Mitchell, Thomas N.: *See*—
Greening, Anthony B.; and Mitchell, Thomas N., 5,701,912, Cl. 128-773.000.
Mitel Corporation: *See*—
Pinard, Deborah L.; and Letkeman, Kim D., 5,703,942, Cl. 379-207.000.
Mitsubishi Chemical Corporation: *See*—
Koseki, Toshinori; Maeda, Kunio; and Kanno, Syoichi, 5,702,810, Cl. 428-318.800.
Mitsubishi Denki Kabushiki Kaisha: *See*—
Arima, Satoshi, 5,703,391, Cl. 257-382.000.
Arimoto, Kazutami; and Tsukude, Masaki, 5,703,522, Cl. 327-534.000.
Hashizume, Takeshi; and Sakashita, Kazuhiro, 5,703,513, Cl. 327-202.000.
Iketani, Masayuki; and Ohbayashi, Shigeki, 5,703,510, Cl. 327-143.000.
Maekawa, Hirotoshi, 5,703,410, Cl. 290-40.00C.
Majumdar, Gourab; Iwagami, Tooru; and Noda, Sukehisa, 5,703,399, Cl. 257-723.000.
Matsuura, Masazumi, 5,703,404, Cl. 257-758.000.
Morita, Shingo; Fukui, Wataru; and Wada, Shuichi, 5,701,876, Cl. 123-630.000.
Nakashima, Teruya, 5,703,541, Cl. 331-57.000.
Osawa, Tokuya, 5,703,818, Cl. 365-201.000.
Sakata, Hirofumi; and Nishioka, Tadashi, 5,702,849, Cl. 430-5.000.
Sawada, Seiji, 5,703,831, Cl. 365-233.000.
Suzuki, Shigehisa; Fukami, Tatsuya; Fujii, Yoshio; Kawano, Yuji; and Maeda, Yoshinobu, 5,703,733, Cl. 360-77.010.
Suzuki, Tomio; Mori, Shigeru; and Miyamoto, Takayuki, 5,703,829, Cl. 365-233.000.
Takanabe, Naoko; and Tanaka, Ichiro, 5,703,780, Cl. 364-449.300.
Yamaguchi, Yasuo, 5,703,393, Cl. 257-419.000.
Mitsubishi Electric Engineering Co., Ltd: *See*—
Nakashima, Teruya, 5,703,541, Cl. 331-57.000.
Mitsubishi Gas Chemical Company, Inc.: *See*—
Abe, Mariko; Ebata, Shuji; Abe, Takafumi; and Higuchi, Hirofumi, 5,703,272, Cl. 560-231.000.
Mitsubishi Jukogyo Kabushiki Kaisha: *See*—
Izumi, Jun; Yasutake, Akinori; Tsutaya, Hiroyuki; Harada, Takayuki; and Hamada, Kenichi, 5,702,505, Cl. 95-115.000.
Oono, Kiyoo, 5,702,050, Cl. 228-212.000.
Mitsubishi Pencil Co., Ltd.: *See*—
Yano, Masanao; Yadoiwa, Takeshi; and Yanase, Chie, 5,702,512, Cl. 106-31.750.
Mitsubishi Pencil Kabushiki Kaisha: *See*—
Ando, Yoichi, 5,702,863, Cl. 430-200.000.
Mitsui Petrochemical Industries, Ltd.: *See*—
Itoh, Yuichi; Kobayashi, Kyoko; Uchiyama, Akira; and Takehara, Toru, 5,702,827, Cl. 428-519.000.
Tashiro, Takashi; and Ueda, Takashi, 5,703,181, Cl. 526-140.000.
Tsutsui, Toshiyuki; Yoshitsugu, Ken; Takahashi, Mamoru; and Todo, Akira, 5,703,180, Cl. 526-119.000.
Mitsui, Tadashi; and Hieda, Katsuhiko, to Kabushiki Kaisha Toshiba. Plurality of photolithographic alignment marks with shape, size and spacing based on circuit pattern features. 5,702,567, Cl. 156-644.100.
Mitsumoto, Shinji: *See*—
Nozaki, Nobuharu; Mitsumoto, Shinji; Kubo, Kazumi; and Kobayashi, Fumio, 5,703,900, Cl. 372-107.000.
Mitsuya, Yoshihide: *See*—
Kageyama, Hidehei; Ueki, Tomiji; and Mitsuya, Yoshihide, 5,702,193, Cl. 401-65.000.
Miura, Kenji, to Fujitsu Limited. Data communication method for communicating data having different frame formats and format conversion unit used for such a data communication method. 5,703,880, Cl. 370-465.000.
Miwada, Kazuo, to NEC Corporation. Color linear image sensor having a reduced distance between photosensor arrays. 5,703,640, Cl. 348-272.000.
Miyagi, Takahiro; Takaya, Shigeru; and Masunaga, Yoshifumi, to Pioneer Electronic Corporation. Pickup device for otpical disk. 5,703,864, Cl. 369-112.000.
Miyake, Akio; Nakamura, Masahira; and Fukushi, Hideto, to Takeda Chemical Industries, Ltd. Quinolonecarboxylic acid derivatives, their production and use. 5,703,081, Cl. 514-254.000.
Miyake, Hidekazu: *See*—
Kishi, Sohtaroh; Shiba, Yoshio; Miyake, Hidekazu; and Kuenzel, Wilhelm, 5,702,748, Cl. 426-478.000.
Miyake, Jiro: *See*—
Ninomiya, Kazuki; Sumida, Keizo; Miyake, Jiro; and Nishiyama, Tamotsu, 5,703,800, Cl. 364-736.000.
Miyamoto, Harukazu: *See*—
Miyauchi, Yasushi; Terao, Motoyasu; Hirotsune, Akemi; Minemura, Hiroyuki; and Miyamoto, Harukazu, 5,703,867, Cl. 369-275.300.

Miyamoto, Masayuki; Iizuka, Kunihiko; Fujio, Mitsuhiko; and Matsui, Hirofumi, to Sharp Kabushiki Kaisha. Winner-take-all circuit. 5,703,503, Cl. 327-58.000.
Miyamoto, Shigeyuki, to NEC Corporation. Toxicity detecting biosensor system. 5,702,915, Cl. 435-32.000.
Miyamoto, Shuji: *See*—
Mori, Yasutomo; Orihara, Motoi; Hada, Kunihiko; and Miyamoto, Shuji, 5,703,006, Cl. 503-207.000.
Miyamoto, Takashi: *See*—
Mikami, Ichizou; Komasaka, Toshio; Niimi, Masahiro; and Miyamoto, Takashi, 5,704,031, Cl. 395-182.020.
Miyamoto, Takayuki: *See*—
Suzuki, Tomio; Mori, Shigeru; and Miyamoto, Takayuki, 5,703,829, Cl. 365-233.000.
Miyano, Hitoshi, to Fuji Photo Film, Co., Ltd.; and Fuji Photo Optical Co., Ltd. Objective lens system for endoscope. 5,703,724, Cl. 359-660.000.
Miyashita, Hiroichi: *See*—
Okamoto, Hideyuki; Miyashita, Hiroichi; and Nakayama, Ryoichi, 5,702,591, Cl. 209-167.000.
Miyashita, Hiroyuki: *See*—
Tarumoto, Norihiro; Miyashita, Hiroyuki; Iimura, Yukio; and Mikami, Koichi, 5,702,847, Cl. 430-5.000.
Miyashita, Yukio; and Nishiyama, Toshiro, to NEC Corporation. Informing device for a radio receiver. 5,703,572, Cl. 340-825.440.
Miyauchi, Yasushi; Terao, Motoyasu; Hirotsune, Akemi; Minemura, Hiroyuki; and Miyamoto, Harukazu, to Hitachi, Ltd.; and Hitachi Maxell, Ltd. Optical recording medium having a dummy area at leading and/or trailing positions of recording area. 5,703,867, Cl. 369-275.300.
Miyazaki, Hideto, to Ricoh Company, Ltd. Control device for a stepping motor included in an electronic apparatus. 5,703,455, Cl. 318-685.000.
Miyazaki, Shigeyuki; Yokokawa, Hiroshi; and Ninomiya, Yuichi, to Kinseki Limited; and Nippon Hoso Kyokai. Retina direct display device and television receiver using the same. 5,703,637, Cl. 348-53.000.
Miyazaki, Shinichi: *See*—
Komatsuki, Masato; Ishii, Makoto; Adachi, Yukishige; Makino, Keiichi; and Miyazaki, Shinichi, 5,702,549, Cl. 152-548.000.
Miyazawa, Kazutoshi: *See*—
Haseba, Yasuhiro; Miyazawa, Kazutoshi; Matsui, Shuichi; Kondo, Tomoyuki; Goto, Yasuyuki; Nakagawa, Etsuo; and Sawada, Shinichi, 5,702,641, Cl. 252-299.630.
Mizobe, Hoyo: *See*—
Yamada, Nobuaki; Kozaki, Shuichi; Mizobe, Hoyo; Yoshida, Masahiko; and Suzuki, Kenji, 5,702,642, Cl. 252-299.660.
Mizukami, Yuichi: *See*—
Takata, Asami; Numata, Shoko; Mizukami, Yuichi; Sekiyama, Yasushi; and Takahashi, Masato, 5,703,124, Cl. 514-514.000.
Mizuno, Manabu: *See*—
Asai, Koichi; Isogai, Takeyoshi; Mizuno, Manabu; and Adachi, Jun, 5,701,821, Cl. 101-424.000.
Mizuno, Sadao: *See*—
Hayashi, Hideki; Mizuno, Sadao; Ito, Noboru; Urairi, Kenichiro; and Komma, Yoshiaki, 5,703,856, Cl. 369-54.000.
Mizuno, Shigehiko: *See*—
Kurakake, Yasushi; and Mizuno, Shigehiko, 5,703,310, Cl. 84-609.000.
Mizutani, Hidemasa: *See*—
Saika, Toshihiro; Mizutani, Hidemasa; Kaifu, Noriyuki; and Kameshima, Toshio, 5,703,666, Cl. 349-61.000.
Mizutani, Kenzo: *See*—
Sato, Akihiko; Mizutani, Kenzo; Kawabata, Masami; and Sumiyoshi, Iwao, 5,702,846, Cl. 430-2.000.
Mizutani, Kouichi; Tanaka, Takehiko; Maruyama, Kenya; Senda, Masanori; Takeuchi, Katsunao; and Sato, Toru, to Toyota Jidoshi Kabushiki Kaisha. Apparatus for controlling the speed of an engine. 5,701,867, Cl. 123-339.160.
Mizutani, Minoru; Hayashi, Kuniharu; and Aida, Koji, to Oki Electric Industry Co., Ltd. Rack and pinion cleaning mechanism in a serial printer. 5,702,189, Cl. 400-328.000.
Mizutani, Natsuhiko, to Canon Kabushiki Kaisha. Gain-coupling distributed feedback semiconductor and method of producing the same. 5,703,899, Cl. 372-96.000.
Mizutani, Takashi, to Nippondenso Co., Ltd. Stepper motor with shortened axial length. 5,703,419, Cl. 310-49.00R.
Mnich, Thomas: *See*—
Takata, Hidekazu; Mnich, Thomas; and Novosel, David, 5,703,804, Cl. 365-145.000.
Mobil Oil Corporation: *See*—
Allen, Kenneth Paul, 5,703,833, Cl. 367-46.000.
Mahone, William C.; Chandler, Bruce D.; Killeen, Joseph P.; and Garrett, David L., 5,702,205, Cl. 405-169.000.
Moch, Rockie D.: *See*—
Reddersen, Brad R.; Shepard, Phillip W.; Moch, Rockie D.; and Williams, Jon Paul Charles, 5,703,347, Cl. 235-472.000.
Moddel, Garret Robin: *See*—
Pankove, Jacques Isaac; Moddel, Garret Robin; and Douglas, Kenneth, 5,703,896, Cl. 372-50.000.
Model & Instrument Development Corporation: *See*—
Wood, Christopher; Cairns, James G., Jr.; and Harris, Walter D., 5,702,488, Cl. 623-27.000.
Modern Polymers, Inc.: *See*—
Phillips, Stephen Allan, II; Myers, Jeffery Edward; and Elmore, Robert Bradley, 5,701,999, Cl. 206-320.000.
Modrich, Paul L.; Su, Shin-San; Au, Karin G.; Lahue, Robert S.; Cooper, Deani Lee; and Worth, Leroy, Jr., to Duke University. Methods of analysis and manipulating of DNA utilizing mismatch repair systems. 5,702,894, Cl. 435-6.000.
Mohn, Frank, to Framo Engineering AS. Sealing system. 5,701,797, Cl. [illegible].
Mohrbacher, Bernard, to Eventoff, Franklin N. Musical instrument system with note anticipation. 5,703,309, Cl. 84-609.000.
Mohrmann, Hans Dierk, to Koenig & Bauer-Albert Aktiengesellschaft. Printing press cylinder coupling method and apparatus. 5,701,818, Cl. 101-375.000.
Mok, Sammy L., to MicroModule Systems Inc. Mounting assembly for multiple chip module with more than one substrate and computer using same. 5,703,753, Cl. 361-715.000.
Molecular OptoElectronics Corporation: *See*—
Gordon, Janet L.; and Gascoyne, David G., 5,703,197, Cl. 528-201.000.
Molex Incorporated: *See*—
Jones, Dennis Boyd, 5,702,266, Cl. 439-357.000.
Molin, Renzo Dal: *See*—
Pons, Pascal; and Molin, Renzo Dal, 5,702,426, Cl. 607-27.000.
Molin, Søren; Andersson, Poul Kirketerp; Gerdes, Kenn Axo; and Klemm, Per, to GX Biosystems A/S. Biological Containment. 5,702,916, Cl. 435-69.100.
Mollenauer, Kenneth H.: *See*—
Kieturakis, Maciej J.; Mollenauer, Kenneth H.; Monfort, Michelle Y.; and Kayan, Helmut L., 5,702,416, Cl. 606-193.000.
Mölnlycke AB: *See*—
Widlund, Urban; and Hansson, Roy, 5,702,378, Cl. 604-373.000.
Moltzen, Ejner Knud: *See*—
Perregaard, Jens Kristian; Moltzen, Ejner Knud; Andersen, Kim; Pedersen, Henrik; Bøgesø, Klaus Peter; Pernet, Andre; Bopp, Barbara; Mulford, Darcy; and Sakamoto, Kiyoshi, 5,703,087, Cl. 514-278.000.
Molva, Engin: *See*—
Thony, Philippe; Rabarot, Marc; and Molva, Engin, 5,703,890, Cl. 372-12.000.
Momose, Yuichi: *See*—
Horiuchi, Hiroshi; Momose, Yuichi; and Ushikoshi, Takeshi, 5,701,860, Cl. 123-182.100.
Monarch Knitting Machinery Corporation: *See*—
Bell, Cecil Roland, 5,703,688, Cl. 356-430.000.
Mondon-Rossignol, Sylvie; and Defossez, Béatrice, to L'Oreal. Use of an organofluorine hydrocarbon compound as a binder for cosmetic powder compositions, and composition containing said compound. 5,702,689, Cl. 424-63.000.
Monfort, Michelle Y.: *See*—
Kieturakis, Maciej J.; Mollenauer, Kenneth H.; Monfort, Michelle Y.; and Kayan, Helmut L., 5,702,416, Cl. 606-193.000.
Monge-Cadet, Pierre: *See*—
Paidassi, Serge; Ernoult, Jacques; Brun, Michel; Monge-Cadet, Pierre; Pauleau, Yves; and Farges, Guy, 5,702,829, Cl. 428-610.000.
Monk, John Frederick: *See*—
Smith, Alan Keith; Monk, John Frederick; and Tolley, Robert Frank, 5,702,178, Cl. 362-294.000.
Monolithic System Technology, Inc.: *See*—
Leung, Wingyu; and Lin, Jeffrey J., 5,703,827, Cl. 365-230.060.
Monsanto Company: *See*—
Asrar, Jawed; and Bhombal, A. Hameed, 5,703,134, Cl. 521-48.000.
Berger, Paul D.; and Jimenez, Antonio M., 5,703,015, Cl. 504-206.000.
Bovy, Philippe R.; Rico, Joseph G.; Rogers, Thomas E.; Tjoeng, Foe S.; and Zablocki, Jeffery A., 5,703,125, Cl. 514-539.000.
Klee, Harry John; and Kishore, Ganesh Murthy, 5,702,933, Cl. 435-172.300.
Stern, Michael K.; Cheng, Brian K.; Ebner, Jerry R.; and Riley, Dennis P., 5,703,273, Cl. 562-16.000.
Talley, John J., 5,703,263, Cl. 558-170.000.
Montangero, Enrico: *See*—
Guzzini, Virgilio; Montangero, Enrico; and Onori, Roberto, 5,702,353, Cl. 601-2.000.
Monteilh, Darryl F.: *See*—
Makwana, Jitendra J.; Monteilh, Darryl F.; and Omon, Effiong A., 5,703,808, Cl. 365-185.270.
Montell North America Inc.: *See*—
Evain, Eric J., 5,702,815, Cl. 428-364.000.
Fezza, Richard J.; and Williams, Stephen D., 5,703,203, Cl. 528-[illegible].
Montgomery, Donald C. Positive seal fermentation lock for wine barrels. 5,702,018, Cl. 220-203.130.
Montross, S. Sam. Apparatus for making two twin/single mattresses usable as one mattress system. 5,701,620, Cl. 5-658.000.
Moon, Kyusum, to Samsung Electronics Co., Ltd. Method for manufacturing polysilicon thin film transistor. 5,702,960, Cl. 437-40.TFT.
Moore Company, The: *See*—
Russell, William E.; Hall, Barrie G.; and Medeiros, Fernando, 5,702,001, Cl. [illegible].
Moore, Michael A.; Griffin, David R.; and Dubose, Jeffery, to Hasbro, Inc. Toy gun having a trigger assembly for aiming and launching a projectile from a flexible appendage. 5,701,878, Cl. 124-67.000.
Moore, Robert P., to United Technologies Corporation. Cooled airfoils for a gas turbine engine. 5,702,232, Cl. 416-95.000.
Morad, Fred I., to Worldwide Integrated Resources, Inc. Mop holder with a quick release locking nut. 5,701,628, Cl. 15-150.000.

Moradi, Mohammad A.; Rossman, Michael D.; LaBell, Larry; and Holz, Bonita, to Ford Global Technologies, Inc. Driveline alignment apparatus and method. 5,703,796, Cl. 364-563.000.
Moran, Kristen G. Pivotal, spherically shaped, motion simulator-with shifting means for controlling its' center of gravity. 5,702,307, Cl. 472-47.000.
Morando, Jorge A. Heat treating, annealing and tunnel furnace rolls. 5,702,338, Cl. 492-30.000.
Moratalla, Jose. Ceramic desiccant device. 5,702,508, Cl. 96-118.000.
Morbieu, Bertrand, to Sextant Avionique. Transceiver head for longitudinal doppler speed indicator. 5,703,679, Cl. 356-28.500.
Moreau, Bertrand: *See—*
Audoin, Michel; Moreau, Bertrand; and Colineau, Joseph, 5,703,845, Cl. 359-44.410.
Moreau, Jean-Charles: *See—*
Rabbe, Louis-Marie; Boyd, Lawrence M.; Chevalier, Jean-Louis; and Moreau, Jean-Charles, 5,702,453, Cl. 623-17.000.
Morgan & White Ltd., PA Corp.: *See—*
White, Kenneth P.; and White, David B., 5,702,648, Cl. 261-142.000.
Mori, Akira; Hagiwara, Shigeki; and Tanaka, Hirokazu, to Komatsu Ltd. Method and device for color laser marking. 5,703,709, Cl. 359-196.000.
Mori, Shigeru: *See—*
Suzuki, Tomio; Mori, Shigeru; and Miyamoto, Takayuki, 5,703,829, Cl. 365-233.000.
Mori, Shinsuke, to Hamamatsu Photonics K.K. Positron emission computed tomography apparatus and image reconstruction method. 5,703,369, Cl. 250-363.030.
Mori, Tsutomu; Fujimoto, Makoto; Goto, Yukie; and Egusa, Yo, to Matsushita Electric Industrial Co., Ltd. Automatic exposure control apparatus. 5,703,644, Cl. 348-363.000.
Mori, Yasutomo; Orihara, Motoi; Hada, Kunihiko; and Miyamoto, Shuji, to Ricoh Company, Ltd. Thermosensitive recording medium. 5,703,006, Cl. 503-207.000.
Morikawa, Takeshi, to Minolta Co., Ltd. Digital copy machine allowing duplex copying in short time through novel recirculation timing. 5,703,693, Cl. 358-296.000.
Morimatsu, Eishi: *See—*
Nakagawa, Akira; Morimatsu, Eishi; Konoshima, Makiko; and Matsuda, Kiichi, 5,703,704, Cl. 359-9.000.
Morimura, Kazuhiko: *See—*
Akiyama, Yuji; Morimura, Kazuhiko; Matsumoto, Masashi; Sugama, Sadayuki; Kamada, Masashi; and Ninomiya, Takayuki, 5,704,019, Cl. 395-101.000.
Morinaka, Katsuya: *See—*
Hashimoto, Kazuhiko; Yoshiike, Nobuyuki; and Morinaka, Katsuya, 5,703,367, Cl. 250-342.000.
Morishima, Shingo; Yamada, Jun; Kanehara, Kenji; and Yoshinaga, Tohru, to Nippon Soken, Inc. Apparatus for purifying exhaust gas. 5,701,736, Cl. 60-297.000.
Morita, Minoru: *See—*
Watanabe, Toshiya; Noguchi, Masatoshi; Toyosawa, Takeshi; and Morita, Minoru, 5,702,188, Cl. 400-120.050.
Morita, Shingo; Fukui, Wataru; and Wada, Shuichi, to Mitsubishi Denki Kabushiki Kaisha. Misfire detecting apparatus for internal combustion engine. 5,701,876, Cl. 123-630.000.
Morita, Tetsuo, to Brother Kogyo Kabushiki Kaisha. Headgear holder for use with sewing machine. 5,701,831, Cl. 112-103.000.
Moritani, Masami: *See—*
Ohta, Tatsuya; and Moritani, Masami, 5,703,340, Cl. 219-121.480.
Moritani, Tohei: *See—*
Jester, Randy Douglas; Penoyer, John Arthur; Roth, Douglas Duane; Frank, Detlef; Onodera, Minoru; Tsudaka, Takeichi; Sato, Toshiaki; and Moritani, Tohei, 5,703,202, Cl. 528-481.000.
Moritz, Timothy C.: *See—*
Allott, Mark T.; Billimack, James J.; and Moritz, Timothy C., 5,702,660, Cl. 264-242.000.
Moriya, Hitoshi: *See—*
Osada, Takayuki; Tsuda, Fumishiro; Saito, Norio; Ihara, Takeji; Wagatsuma, Yoshio; and Moriya, Hitoshi, 5,703,557, Cl. 336-92.000.
Moriya, Yoshihito, to Toyota Jidosha Kabushiki Kaisha. Variable valve timing mechanism of engine. 5,701,858, Cl. 123-90.170.
Moriyama, Keiji: *See—*
Horiuchi, Kuniyasu; Endo, Seiichiro; Moriyama, Keiji; and Yokota, Masatoshi, 5,702,312, Cl. 473-377.000.
Morizumi, Masaaki, to Fuji Photo Optical Co., Ltd. Endoscope with acutely angled handle and associated focus adjustment mechanism. 5,702,349, Cl. 600-131.000.
Morohashi, Kenji: *See—*
Nakamura, Toyokazu; Hanagama, Yasuko; Tajiide, Tohru; and Morohashi, Kenji, 5,703,492, Cl. 324-751.000.
Moroney, Paul: *See—*
Nuber, Ray; Moroney, Paul; and Walker, G. Kent, 5,703,877, Cl. 370-395.000.
Morota, Etsuko: *See—*
Maruoka, Kazuhisa; and Morota, Etsuko, 5,703,657, Cl. 348-554.000.
Moroz, Anatolij I.: *See—*
Paramonov, Vladimir A.; Tychinin, Anatolij I.; Moroz, Anatolij I.; Birger, Boris L.; Frommann, Klaus; Haupt, Werner; and Ottersbach, Walter, 5,702,528, Cl. 118-623.000.
Morris, Jerry L. Self aligning tool for registering rotary printing plates and method of registering plates. 5,701,823, Cl. 101-486.000.
Morris, Joel: *See—*
Gammill, Ronald B.; Judge, Thomas M.; and Morris, Joel, 5,703,075, Cl. 514-233.500.
Morris, Sandra A.; Curotto, James E.; Bills, Gerald F.; Dreikorn, Sarah J.; Streicher, Stanley L.; Zink, Deborah L.; Thompson, John R.; Basilio, Angela; Pelaez, Fernando; Diez, Maria Teresa; and Vicente, Francisca, to Merck & Co., Inc. Antifungal agent. 5,702,929, Cl. 435-118.000.
Morris, Virgil: *See—*
Pellegrin, Michael T.; Gavin, Patrick M.; Ault, Patrick L.; Loftus, James E.; Haines, Randall M.; and Morris, Virgil, 5,702,658, Cl. 264-172.140.
Morrison, W. Andrew: *See—*
Lawson, John A.; Morrison, W. Andrew; and Savoie, Rob E., 5,703,727, Cl. 359-802.000.
Morser, Michael J.: *See—*
Andrews, William H.; Morser, Michael J.; and Vilander, Laura R., 5,702,931, Cl. 435-172.300.
Mosaid Technologies Incorporated: *See—*
Foss, Richard C., 5,703,508, Cl. 327-111.000.
Mosel Vitelic Inc.: *See—*
Wang, Chih-Hsien; Chen, Min-Liang; and Chang, Thomas, 5,703,388, Cl. 257-315.000.
Moseley, Jane M.: *See—*
Martin, Thomas J.; Moseley, Jane M.; Kemp, Bruce E.; and Wettenhall, Richard E. H., 5,703,207, Cl. 530-324.000.
Moss, Glenn A.; and Talaski, Edward J., to Walbro Corporation. Regenerative fuel pump. 5,702,229, Cl. 415-55.400.
Mossburg, William H., Jr. Catch basin guard. 5,702,595, Cl. 210-163.000.
Moszner, Norbert: *See—*
Rheinberger, Volker; Moszner, Norbert; Salz, Ulrich; and Voelkel, Thomas, 5,703,249, Cl. 549-337.000.
Motorola: *See—*
Chen, Eugene; and Tehrani, Saied N., 5,702,831, Cl. 428-611.000.
Chun, Christopher K. Y.; Shook, Stephen G.; and Ryan, Carl R., 5,703,504, Cl. 327-72.000.
Norman, Michael P.; and Jachimowicz, Karen E., 5,702,305, Cl. 463-42.000.
Shook, Stephen G.; Chun, Christopher K. Y.; and Schwartz, Daniel B., 5,703,506, Cl. 327-87.000.
Tehrani, Saied N.; Chen, Eugene; Durlam, Mark; and Zhu, Xiaodong T., 5,703,805, Cl. 365-173 000.
Wei, Chengping; Shi, Song Q.; and Lee, Hsing-Chung, 5,703,394, Cl. 257-433.000.
Motorola, Inc.: *See—*
Allen, Donald Eugene; Stringer, Steven Ray; Coyne, Richard Dale, deceased, 5,701,645, Cl. 29-25.350.
Anderson, Michael John; Johnson, Gary Carl; Popovich, Mark Phillip; and Christensen, Jeffrey Eames, 5,702,775, Cl. 428-1.000.
Baranowski, Robert; and Taylor, Matthew Whiting, 5,703,470, Cl. 320-49.000.
Blanchard, Scott David; Kallman, Kurt Albert; and Bucher, William Alexander, 5,703,903, Cl. 375-232.000.
Burrell, Dennis A.; Davis, James Talmage, II; and Flores, Mauricio, 5,703,600, Cl. 343-700.0MS.
Cannon, Nancy Mondrosch; Cannon, Gregory Lewis; and Kilp, David Patrick, 5,703,571, Cl. 340-825.440.
Circello, Joseph C., 5,704,034, Cl. 395-183.140.
Claisse, Paul; and Kiely, Philip, 5,703,892, Cl. 372-32.000.
Cripe, Jerry D.; Maudie, Theresa Ann; Reed, Charles L.; and Menchio, Michael P., 5,703,482, Cl. 324-158.100.
DeHaven, Robert Keith; and Wenzel, James F., 5,701,666, Cl. 29-831.000.
Fang, Yi; Carralero, Cesar; and McEwen, Mark, 5,703,909, Cl. 375-295.000.
Gillig, Steven Frederick; and Kosiec, Jeannie Han, 5,703,539, Cl. 331-16.000.
Gorday, Paul Edward; Gorday, Xuan-Khanh Tran; and Satyamurti, Sunil, 5,703,570, Cl. 340-825.440.
Jachimowicz, Karen E.; Kelly, George R.; and Lebby, Michael S., 5,703,664, Cl. 349-58.000.
Knoch, Lynnita K.; and Tam, Pak, 5,703,389, Cl. 257-327.000.
Main, William Eric, 5,703,478, Cl. 323-315.000.
Makwana, Jitendra J.; Monteilh, Darryl F.; and Omon, Effiong A., 5,703,808, Cl. 365-185.270.
McClish, Michael A.; Lynch, Marvin L.; Selfe, Margaret A.; Steinl, Gregory; and Remboski, Donald J., Jr., 5,703,283, Cl. 73-116.000.
Pan, ShaoWei; and Wang, Shay-Ping Thomas, 5,703,801, Cl. 364-748.500.
Patino, Joseph, 5,703,467, Cl. 320-106.000.
Sun, Xiao; and Hull, Carmie A., 5,703,885, Cl. 371-27.000.
Tayloe, Daniel Richard; Miller, Nathan West; and Frederick, Robert Thomas, 5,703,595, Cl. 342-175.000.
Weeks, Anthony R.; Norris, Mark D.; and Switzer, Steven A., 5,703,493, Cl. 324-755.000.
Wieczorek, Alfred B.; Jones, Thomas Mark; and Sprenger, Michael Kent, 5,703,479, Cl. 324-73.100.
Yishay, Oded; LaViolette, William P.; and Pechonis, Daniel W., 5,704,039, Cl. 395-186.000.
Zeber, Kenneth Arthur, 5,703,405, Cl. 257-777.000.
Moulin, Claudie: *See—*

Durand, Ludovic; Babingui, Jean-Paul; Moulin, Claudie; Robert-Piessard, Sylvie; Le Baut, Guillaume; Scalbert, Elisabeth; Caignard, Daniel-Henri; and Renard, Pierre, 5,703,118, Cl. 514-456.000.
Mouri, Akihiro; Toyono, Tsutomu; Kaneko, Shuzo; Inaba, Yutaka; and Kanbe, Junichiro, to Canon Kabushiki Kaisha. Driving method for ferroelectric optical modulation device. 5,703,614, Cl. 345-97.000.
Mous, Jan: *See—*
Bannwarth, Wilhelm; Caspers, Patrick; Le Grice, Stuart; and Mous, Jan, 5,702,918, Cl. 435-69.300.
Moyer, Donna L.: *See—*
Hastrup, Sven; Branner, Sven; Jørgensen, Birthe Ravn; Christensen, Tove; Jørgensen, Birgitte Bojer; Shuster, Jeffrey R.; Madden, Mark; Moyer, Donna L.; and Fuglsang, Claus, 5,702,934, Cl. 435-183.000.
MTL Modern Technologies Lizenz GmbH: *See—*
Fernandez-Kirchberger, Paul; and Seidl, Joachim, 5,702,789, Cl. 428-40.100.
MTU Motoren- und Turbinen-Union Muenchen GmbH: *See—*
Meier, Reinhold, 5,701,669, Cl. 29-889.100.
Muchi, Tsuneo; Kono, Yoji; and Shimizu, Kano, to Sony Corporation. Apparatus for use in producing cathode ray tube. 5,702,526, Cl. 118-213.000.
Mueller, Donald L.; and Miciano, Benjamin L., to ITT Automotive Electrical Systems, Inc. Power-on-reset and watchdog circuit and method. 5,704,038, Cl. 395-185.080.
Mueller, Markus, to Agfa-Gevaert AG. Zoom lens system for a photographic copier. 5,703,676, Cl. 355-56.000.
Muenzel, Horst: *See—*
Treutler, Christoph; Benz, Rolf; Muenzel, Horst; Schmidt, Steffen; Reihlen, Eckart; and Lock, Andreas, 5,703,287, Cl. 73-204.260.
Mukai, Toshio: *See—*
Shimokawa, Kenji; Dohnomae, Hitoshi; Mukai, Toshio; and Shimanoe, Kengo, 5,702,793, Cl. 428-64.300.
Mukainakano, Shinichi: *See—*
Sobue, Susumu; Yamauchi, Takeshi; and Mukainakano, Shinichi, 5,703,403, Cl. 257-751.000.
Mukoyama, Koichiro: *See—*
Hanada, Shinichi; and Mukoyama, Koichiro, 5,702,814, Cl. 428-364.000.
Mukunthan, Kannappar: *See—*
Strezov, Lazar; Mahapatra, Rama Ballav; Sylva, Fred de; and Mukunthan, Kannappar, 5,701,948, Cl. 164-480.000.
Mulford, Darcy: *See—*
Perregaard, Jens Kristian; Moltzen, Ejner Knud; Andersen, Kim; Pedersen, Henrik; Bøgesø, Klaus Peter; Pernet, Andre; Bopp, Barbara; Mulford, Darcy; and Sakamoto, Kiyoshi, 5,703,087, Cl. 514-278.000.
Mullen, John Mark: *See—*
Boggs, Andrew Keith; Hoang, Quy N.; Jacobs, Joe; Mullen, John Mark; Purrington, Challis; and Weaver, Laura A., 5,703,872, Cl. 370-252.000.
Mullen, Penny M.: *See—*
Pilot, John F.; Madamba, Shirley M.; and Mullen, Penny M., 5,702,864, Cl. 430-264.000.
Muller, Fernand: *See—*
Desgrandchamps, Francois; Eugene, Michel; Girrens, Nico; Muller, Fernand; and Spaniol, Sylvia, 5,701,746, Cl. 62-62.000.
Muller, George W.; Shire, Mary; and Stirling, David I., to Celgene Corporation. Immunotherapeutic imides/amides. 5,703,098, Cl. 514-339.000.
Müller, Hans Friedrich, to Huwil-Werke GmbH. Drawer locking means for drawers arranged one above the other. 5,702,167, Cl. 312-221.000.
Muller, Olivier: *See—*
Lavielle, Gilbert; Muller, Olivier; Millan, Mark; and Audinot, Valérie, 5,703,070, Cl. 514-212.000.
Mulligan, Shaun T.; Vandepas, Robert J.; Shuler, James F.; and Almasy, Lawrence, to WCM Industries, Inc. Sanitary yard hydrant. 5,701,925, Cl. 137-119.050.
Mulligan-Kehoe, Mary Jo, to United States of America, Health and Human Services. Phage-display of immunoglobulin heavy chain libraries. 5,702,892, Cl. 435-6.000.
Mullinix, Sam E., Jr.: *See—*
Bracken, Peter W.; Brener, Jeffery R.; DiGirolamo, Martin V.; Mullinix, Sam E., Jr.; Stafford, Donald W.; and Wallin, Peter E., 5,702,812, Cl. 428-323.000.
Mulrooney, Michael J., to Magnetrol International, Inc. Microwave transmitter housing. 5,703,289, Cl. 73-290.00V.
Mumby, Timothy A.: *See—*
Clifford, Arthur L.; Dong, Dennis F.; Mumby, Timothy A.; and Rogers, Derek J., 5,702,587, Cl. 205-760.000.
Munakata, Hiroki; Nishimura, Yoichi; Kitagawa, Hiroshi; and Akazaki, Shusuke, to Honda Giken Kogyo Kabushiki Kaisha. Fuel supply control system for internal combustion engines. 5,701,871, Cl. 123-491.000.
Mundt, Randall S.; and Krieg, Kenneth R., to Lam Research Corporation. Particulate free vacuum compatible pinch seal. 5,702,533, Cl. 118-733.000.
Munschauer, Rainer: *See—*
Steiner, Gerd; Munschauer, Rainer; Unger, Liliane; Teschendorf, Hans-Jürgen; and Höger, Thomas, 5,703,091, Cl. 514-300.000.
Murakami, Hiroshi: *See—*
Honda, Kensuke; Murakami, Hiroshi; and Watanabe, Kazunori, 5,703,466, Cl. 320-23.000.
Murakami, Keiichi; Inamoto, Tadayoshi; Komuro, Hirokazu; Mashio, Hideaki; and Suzuki, Toshio, to Canon Kabushiki Kaisha. Ink jet head manufacturing method using ion machining and ink jet head manufactured thereby. 5,703,630, Cl. 347-45.000.
Murakami, Masashige: *See—*
Asakura, Ryosuke; Nagaiwa, Hirohito; and Murakami, Masashige, 5,703,179, Cl. 526-59.000.
Murakami, Takuya: *See—*
Satou, Masaharu; Kasahara, Tamiyoshi; Murakami, Takuya; Kawagoe, Kenji; Uno, Takaaki; Aimoto, Hideo; and Horiuchi, Tamaki, 5,702,122, Cl. 280-691.000.
Murakami, Umeji: *See—*
Sugai, Ryuji; Murakami, Umeji; and Yamori, Yukio, 5,703,212, Cl. 530-360.000.
Muramatsu, Masayoshi; and Ozaki, Masaaki, to Nippondenso Co., Ltd. Liquid crystal device having resilient support members arranged at vertices of an isosceles triangle. 5,703,665, Cl. 349-60.000.
Murari, Bruno: *See—*
Merlo, Mauro; Cocetta, Franco; Marchió , Fabio; Grasso, Massimo; and Murari, Bruno, 5,703,476, Cl. 323-313.000.
Murasaki, Ryuichi: *See—*
Sakakibara, Keisuke; Murasaki, Ryuichi; Daijyogo, Shinichi; and Minato, Tsuyoshi, 5,702,797, Cl. 428-100.000.
Murase, Tutomu, to NEC Corporation. Congestion control method. 5,703,870, Cl. 370-232.000.
Murata, Kiyohito: *See—*
Matsumoto, Shogo; and Murata, Kiyohito, 5,701,983, Cl. 192-35.000.
Murata Manufacturing Co., Ltd.: *See—*
Nakayama, Akinori; Ishikawa, Terunobi; Takagi, Hiroshi; and Sakabe, Yukio, 5,703,000, Cl. 501-152.000.
Murata Mfg. Co., Ltd.: *See—*
Kawakami, Hiromichi; and Tani, Hiroji, 5,702,996, Cl. 501-14.000.
Murata, Oritoshi; and Okamoto, Masahiko, to Yamamoto Kogaku Co., Ltd. Composite molded article including a polarizer of polycarbonate. 5,702,813, Cl. 428-332.000.
Murata, Toshiki: *See—*
Früh, Thomas; Pitterna, Thomas; Murata, Toshiki; Svensson, Lene D.; Yuumoto, Yoko; and Sakaki, Junichi, 5,703,106, Cl. 514-378.000.
Murata, Toshinori: *See—*
Tsuru, Yasutaka; Okamura, Takumi; Kimura, Shoji; Yamamoto, Yuji; Murata, Toshinori; Katsumata, Kenji; Akiyama, Moriyoshi; and Eda, Takanori, 5,703,658, Cl. 348-554.000.
Murayama, Yuichiro; Satake, Masaki; Hashimoto, Hiroshi; and Okita, Tsutomu, to Fuji Photo Film Co., Ltd. Magnetic recording medium comprising ferromagnetic powder and a specified polyurethane resin. 5,702,821, Cl. 428-425.900.
Murofushi, Kanji; Homma, Taira; Nagura, Shigehiro; and Armentrout, Richard W., to Shin-Etsu Chemical Co., Ltd.; and Shin-Etsu Bio, Inc. Process for preparation of purified xanthan gum. 5,702,927, Cl. 435-104.000.
Murphy, Edward J. Container with waste removal device. 5,701,844, Cl. 119-166.000.
Murphy, James V.; Murphy, Michael J.; Fisher, Burton; and Taylor, Robert, to Advanced Interconnections Corporation. Ball grid array socket assembly. 5,702,255, Cl. 439-71.000.
Murphy, John R.: *See—*
Williams, Diane P.; and Murphy, John R., 5,703,039, Cl. 514-2.000.
Murphy, Kent: *See—*
Davis, Marvin B.; and Murphy, Kent, 5,703,857, Cl. 369-77.200.
Murphy, Michael J.: *See—*
Murphy, James V.; Murphy, Michael J.; Fisher, Burton; and Taylor, Robert, 5,702,255, Cl. 439-71.000.
Murphy, Robert J., Jr.; and Anderson, James G., to Fann Instrument Company. Pressurized fluid density balance. 5,703,278, Cl. 73-30.010.
Murray, Anne M.: *See—*
Cook, Nancy A.; and Murray, Anne M., 5,701,770, Cl. 70-63.000.
Murray, Thomas P., to International Business Machines Corporation. Power switch with inrush current control. 5,703,769, Cl. 363-50.000.
Musasa, Mamoru: *See—*
Sugimoto, Makoto; Musasa, Mamoru; Tanabe, Hiroyuki; and Konishi, Masahiro, 5,702,998, Cl. 501-97.000.
Musazzi, Sergio: *See—*
Perini, Umberto; Martinelli, Paolo; Golinelli, Elena; Musazzi, Sergio; Trespidi, Franco; and Pintus, Nice, 5,703,690, Cl. 356-436.000.
Mussell, Robert D., to Dow Chemical Company, The. Process for preparing a membrane/electrode assembly. 5,702,755, Cl. 427-115.000.
Muto, Yukiyoshi, to Brother Kogyo Kabushiki Kaisha. Embroidery data processing apparatus. 5,701,830, Cl. 112-102.500.
Mutoh, Eiji; Asakura, Suguru; and Nagai, Akira, to Honda Giken Kogyo Kabushiki Kaisha. Anti-theft apparatus which permits the engine to start prior to ID signal discrimination. 5,703,414, Cl. 307-10.500.
Muttesch, Jim: *See—*
Bourscheid, Georges; and Muttesch, Jim, 5,701,932, Cl. 137-558.000.
Mycogen Corporation: *See—*
Caulder, Jerry; Crowley, R. Hugh; Zorner, Paul S.; and Evans, Steven L., 5,703,011, Cl. 504-130.000.
Caulder, Jerry; Crowley, R. Hugh; Zorner, Paul S.; and Evans, Steven L., 5,703,012, Cl. 504-130.000.
Caulder, Jerry; Crowley, R. Hugh; Zorner, Paul S.; and Evans, Steven L., 5,703,013, Cl. 504-131.000.
Caulder, Jerry; Crowley, R. Hugh; Zorner, Paul S.; and Evans, Steven L., 5,703,014, Cl. 504-142.000.

Evans, Steven L.; Harvey, John; and Tsujino, Yasuko, 5,703,019, Cl. 504-320.000.
Schnepf, H. Ernest; Stockhoff, Brian; and Knuth, Mark, 5,702,703, Cl. 424-93.461.
Myers, Jeffery Edward: *See*—
Phillips, Stephen Allan, II; Myers, Jeffery Edward; and Elmore, Robert Bradley, 5,701,999, Cl. 206-320.000.
Myneni, Ganapati Rao, to Southeastern Univ. Research Assn. Ultra high vacuum pumping system and high sensitivity helium leak detector. 5,703,281, Cl. 73-40.700.
N.R. Development Limited: *See*—
Ghiraldi, Alberto, 5,701,756, Cl. 62-438.000.
Nabity, Frederick Alan; Wright, Paul George; Hulinsky, Raymond; and Carson, Douglas Timothy, to Isco, Inc. Method of making a sensor. 5,701,646, Cl. 29-25.350.
NACRE: *See*—
Father, Richard M.; and Ross, Bruce Douglas, 5,701,921, Cl. 132-309.000.
Nadler, Morton: *See*—
Asimopoulos, Nikos; Barry, Alexander Michael; and Nadler, Morton, 5,703,971, Cl. 382-282.000.
Nagai, Akira: *See*—
Mutoh, Eiji; Asakura, Suguru; and Nagai, Akira, 5,703,414, Cl. 307-10.500.
Nagai, Kazukiyo; Adachi, Chihaya; Tamoto, Nozomu; and Sakon, Yohta, to Ricoh Company, Ltd. Organic electroluminescent element. 5,702,833, Cl. 428-690.000.
Nagai, Takashi; Honda, Nobuyasu; Iida, Tomohide; Akiyama, Toshiaki; Kuramashi, Koji; and Toda, Asao, to Mita Industrial Co., Ltd. Method for impression development. 5,702,857, Cl. 430-101.000.
Nagai, Tohru: *See*—
Takahashi, Kazunori; Hamada, Nobuhiro; Takatoo, Masao; Nagai, Tohru; Suzuki, Toshiko; and Furukawa, Souichi, 5,703,778, Cl. 364-437.000.
Nagai, Toshio: *See*—
Ohashi, Ryota; Okada, Hideaki; and Nagai, Toshio, 5,701,739, Cl. 60-453.000.
Nagaiwa, Hirohito: *See*—
Asakura, Ryosuke; Nagaiwa, Hirohito; and Murakami, Masashige, 5,703,179, Cl. 526-59.000.
Nagano, Toshihiro; Sato, Yoshiaki; Nishimori, Jun; and Tachibana, Fusao, to Fuji Jukogyo Kabushiki Kaisha. Separate oiling type two cycle engine. 5,701,856, Cl. 123-73.0AD.
Nagata, Sadao: *See*—
Sugiura, Masahisa; Okada, Kazuhiro; and Nagata, Sadao, 5,702,749, Cl. 426-638.000.
Nagate, Takashi; Uetake, Akihito; Koike, Yoshikazu; and Tabata, Kunio, to Seiko Epson Corporation. Controller for brushless DC motor without position sensor. 5,703,449, Cl. 318-254.000.
Nagel, Thomas O.: *See*—
Thalenfeld, David R.; and Nagel, Thomas O., 5,702,008, Cl. 211-57.100.
Nagels, Hans-Otto; Schröder, Dieter; and Kopowski, Eckart, to Heraeus Instruments GmbH. Culture vessel for cell cultures on a carrier. 5,702,945, Cl. 435-297.100.
Nagg, Paul J.: *See*—
Gupta, Amitava; Blum, Ronald D.; Iyer, Venkatramani S.; and Nagg, Paul J., 5,702,819, Cl. 428-412.000.
Nagura, Shigehiro: *See*—
Murofushi, Kanji; Homma, Taira; Nagura, Shigehiro; and Armentrout, Richard W., 5,702,927, Cl. 435-104.000.
Nagy, Michael, to Silicon Graphics, Inc. DRAM for texture mapping. 5,703,810, Cl. 365-189.050.
Nahm, Eon-Ju: *See*—
Shin, Hyun-Doo; Jo, Sung-O; and Nahm, Eon-Ju, 5,701,624, Cl. 8-159.000.
Nahmias, Marco: *See*—
Carlhoff, Christoph; Jogwich, Martin; Lorenzen, Claus-Jürgen; and Nahmias, Marco, 5,702,550, Cl. 156-64.000.
Nahumi, Dror: *See*—
Kleijn, Willem Bastiaan; and Nahumi, Dror, 5,704,003, Cl. 395-2.290.
Nair, Haridasan K., to Clarion Pharmaceuticals Inc. N-het-substituted glycerophosphoethanolamines. 5,703,062, Cl. 514-77.000.
Naito, Masaaki: *See*—
Takahashi, Hiroyuki; Hamada, Makoto; Fujishima, Hiromichi; Naito, Masaaki; Sasaki, Kazuya; Tsuchiya, Jiro; and Maeda, Tomoharu, 5,702,123, Cl. 280-735.000.
Naito, Masayuki: *See*—
Yamaguchi, Hiroyuki; Naito, Masayuki; Inayoshi, Satoshi; Doi, Nobuyuki; Saida, Kazunori; and Sumiya, Yasuhiko, 5,701,949, Cl. 165-42.000.
Naito, Takaki: *See*—
Uchida, Masaki; Naito, Takaki; Shirai, Hiroshi; Iino, Koichi; and Okazaki, Hiroyuki, 5,702,269, Cl. 439-496.000.
Naka, Takehiko; Nishikawa, Kohei; and Kato, Takeshi, to Takeda Chemical Industries, Ltd. Benzimidazole derivatives, their production and use. 5,703,110, Cl. 514-396.000.
Nakabayashi, Yukikazu: *See*—
Tomozane, Shotaro; Kidou, Hirokazu; and Nakabayashi, Yukikazu, 5,702,496, Cl. 65-102.000.
Nakada, Kazuhiko: *See*—
Hiratani, Haruyuki; Nakada, Kazuhiko; Yamazaki, Toshio; and Ichinohe, Shoji, 5,703,143, Cl. 523-107.000.
Nakagawa, Akira; Morimatsu, Eishi; Konoshima, Makiko; and Matsuda, Kiichi, to Fujitsu Limited. Stereoscopic image information transmission system. 5,703,704, Cl. 359-9.000.
Nakagawa, Chikao: *See*—
Fujiwara, Yuichi; Nakagawa, Chikao; Ito, Hiromi; and Kobayashi, Yoshinori, 5,701,816, Cl. 101-128.400.
Nakagawa, Etsuo: *See*—
Haseba, Yasuhiro; Miyazawa, Kazutoshi; Matsui, Shuichi; Kondo, Tomoyuki; Goto, Yasuyuki; Nakagawa, Etsuo; and Sawada, Shinichi, 5,702,641, Cl. 252-299.630.
Nakagawa, Kazuhiro: *See*—
Hiraiwa, Hiroyuki; Nakagawa, Kazuhiro; Jinbo, Hiroki; Takano, Jun; and Fujiwara, Seishi, 5,702,495, Cl. 65-17.100.
Nakagawa, Koichi; Makino, Mitsuaki; and Kita, Yuichi, to Nippon Shokubai Co., Ltd. Method for preparing a vinyl compound having a hydroxy group. 5,703,270, Cl. 560-183.000.
Nakahama, Tadamitsu: *See*—
Umeda, Hironori; Mashimo, Tohru; Hironaka, Kazuo; Nakahama, Tadamitsu; Yamane, Takakazu; Aizawa, Makoto; and Taniguchi, Yukifumi, 5,702,578, Cl. 204-486.000.
Nakahara, Masanao: *See*—
Takeda, Morihiro; and Nakahara, Masanao, 5,703,729, Cl. 359-821.000.
Nakahashi, Fumio: *See*—
Sasaki, Naotaka; Sugaya, Kenju; and Nakahashi, Fumio, 5,703,635, Cl. 347-176.000.
Nakai, Gary T. Tofu making apparatus. 5,701,810, Cl. 99-495.000.
Nakai, Satoru; Kaneta, Mayumi; Kikumoto, Yoshikazu; Hong, Yeong-Man; Kawai, Kazuyoshi; Takegata, Setsuko; Ishii, Kiyoshi; Yanagihara, Yasuo; and Hirai, Yoshikatsu, to Otsuka Pharmaceutical Co., Ltd. Methods of use of IL-1α. 5,702,698, Cl. 424-85.200.
Nakajima, Akihisa; Yabusaki, Masami; Hirata, Shoichi; Yamaguchi, Kenichi; Fujiwara, Shiokazu; Maruyama, Yasuo; Uchiyama, Yasuyuki; and Takemoto, Eriko, to NTT Mobile Communications Network, Inc. Connection control method for personal communications. 5,703,941, Cl. 379-201.000.
Nakajima, Isao: *See*—
Hayakawa, Koji; Nakajima, Isao; and Utsumi, Yusuke, 5,702,731, Cl. 425-125.000.
Nakajima, Takeaki; and Yamazaki, Kazumi, to Honda Giken Kogyo Kabushiki Kaisha. Arrangement of disposition of canister in vehicle. 5,702,125, Cl. 280-834.000.
Nakakura, Masashi; Ueno, Yuji; Hayakawa, Eiji; and Kuroda, Tokuyuki, to Kyowa Hakko Kogyo Co., Ltd. Method for stabilizing duocarmycin derivatives. 5,703,080, Cl. 514-253.000.
Nakamichi Corporation: *See*—
Asano, Michihiro, 5,703,844, Cl. 369-36.000.
Nakamura, Hiroaki: *See*—
Narita, Toshihiko; Nakamura, Hiroaki; Katakura, Kazuhiko; and Nakaya, Yoshihito, 5,703,671, Cl. 355-32.000.
Nakamura, Joji: *See*—
Suzuki, Fumio; Koike, Nobuaki; Shimada, Junichi; Nakamura, Joji; Shiozaki, Shizuo; Kitamura, Shigeto; Ichikawa, Shunji; Kase, Hiroshi; and Nonaka, Hiromi, 5,703,085, Cl. 514-263.000.
Nakamura, Masahira: *See*—
Miyake, Akio; Nakamura, Masahira; and Fukushi, Hideto, 5,703,081, Cl. 514-254.000.
Nakamura, Seizo, to Oki Electric Industry Co., Ltd. Clock recovery circuit employing delay-and-difference circuit and pulse-sequence detection. 5,703,914, Cl. 375-355.000.
Nakamura, Takuya; Hirano, Isuke; Aoshima, Shinichiro; Takahashi, Hironori; and Urakami, Tsuneyuki, to Hamamatsu Photonics K.K. Voltage detection apparatus. 5,703,491, Cl. 324-750.000.
Nakamura, Tomoharu: *See*—
Amano, Masahiko; Watanabe, Masahiro; Konishi, Hiroo; Tanifuji, Shinya; and Nakamura, Tomoharu, 5,703,791, Cl. 364-492.000.
Nakamura, Toyokazu; Hanagama, Yasuko; Tsujide, Tohru; and Morohashi, Kenji, to NEC Corporation. System and method for fault analysis of semiconductor integrated circuit. 5,703,492, Cl. 324-751.000.
Nakano, Akikazu, to Idemitsu Kosan Co., Ltd. Styrene polymer composition. 5,703,164, Cl. 525-133.000.
Nakano, Yasuhiko; and Ishibashi, Yoichi, to Honda Giken Kogyo Kabushiki Kaisha. Cooling system for spark-ignition two-cycle engine. 5,701,851, Cl. 123-41.100.
Nakano, Yoshihiko: *See*—
Hayase, Shuzi; Nakano, Yoshihiko; and Kani, Rikako, 5,702,776, Cl. 428-1.000.
Nakano, Yutaka: *See*—
Kaji, Naruhiko; Nakano, Yutaka; Nakata, Rempei; Harada, Minoru; Shinjo, Ryoichi; and Tsujimura, Manabu, 5,702,673, Cl. 422-186.070.
Nakao, Masanori: *See*—
Kato, Hironori; Nakao, Masanori; and Ida, Yuichi, 5,702,260, Cl. 439-164.000.
Nakao, Takashi: *See*—
Doi, Masato; Narui, Hironobu; and Nakao, Takashi, 5,703,863, Cl. 369-112.000.
Nakao, Taku: *See*—
Ohno, Hayato; Nakao, Taku; Harada, Hisanobu; Hidesaka, Shinichi; Kohara, Hidekatsu; and Nakayama, Toshimasa, 5,702,862, Cl. 430-191.000.

Nakase, Ryoichi; Ozawa, Shigeyuki; Fujimoto, Hiroaki; and Suzuki, Takehisa, to Sanshin Kogyo Kabushiki Kaisha. Watercraft catalytic exhaust system. 5,702,276, Cl. 440-89.000.
Nakashima, Teruya, to Mitsubishi Denki Kabushiki Kaisha; and Mitsubishi Electric Engineering Co., Ltd. Ring oscillator with two inverters per unit inverter circuit. 5,703,541, Cl. 331-57.000.
Nakata, Rempei: *See*—
Kaji, Naruhiko; Nakano, Yutaka; Nakata, Rempei; Harada, Minoru; Shinjo, Ryoichi; and Tsujimura, Manabu, 5,702,673, Cl. 422-186.070.
Nakata, Yukio: *See*—
Osawa, Yukio; Shimamoto, Katsuhiko; Ishigaki, Shinichi; Araki, Hitoshi; Nakata, Yukio; and Fujimaru, Atsushi, 5,702,501, Cl. 75-255.000.
Nakatani, Kazushi; Takagi, Akira; and Yokoyama, Hajime, to Nippondenso Co., Ltd. Lockup control system for automatic transmission. 5,701,982, Cl. 192-3.300.
Nakatsuka, Tadanori: *See*—
Niki, Toru; Kugai, Nasami; and Nakatsuka, Tadanori, 5,703,962, Cl. 382-173.000.
Nakatsuka, Takashi: *See*—
Iwata, Hiromitsu; Nakatsuka, Takashi; Tanaka, Rie; and Ishiguro, Masaji, 5,703,068, Cl. 514-195.000.
Nakaya, Yoshihito: *See*—
Narita, Toshihiko; Nakamura, Hiroaki; Katakura, Kazuhiko; and Nakaya, Yoshihito, 5,703,671, Cl. 355-32.000.
Nakayama, Akinori; Ishikawa, Terunobi; Takagi, Hiroshi; and Sakabe, Yukio, to Murata Manufacturing Co., Ltd. Semiconductive ceramic composition and semiconductive ceramic device using the same. 5,703,000, Cl. 501-152.000.
Nakayama, Kazuya, to Kabushiki Kaisha Toshiba. Power semiconductor device. 5,703,383, Cl. 257-139.000.
Nakayama, Ryoichi: *See*—
Okamoto, Hideyuki; Miyashita, Hiroichi; and Nakayama, Ryoichi, 5,702,591, Cl. 209-167.000.
Nakayama, Toshimasa: *See*—
Niikura, Satoshi; Suzuki, Takako; Doi, Kousuke; Kohara, Hidekatsu; and Nakayama, Toshimasa, 5,702,861, Cl. 430-191.000.
Ohno, Hayato; Nakao, Taku; Harada, Hisanobu; Hidesaka, Shinichi; Kohara, Hidekatsu; and Nakayama, Toshimasa, 5,702,862, Cl. 430-191.000.
Nakayama, Yoshinobu: *See*—
Horiguchi, Hiroyuki; and Nakayama, Yoshinobu, 5,703,288, Cl. 73-204.260.
Nakazawa, Masaaki: *See*—
Yabe, Hisao; Iida, Yoshihiro; Suzuki, Akira; Ito, Hideo; Tashiro, Yoshio; Yamazaki, Minoru; Tamada, Osamu; Nakazawa, Masaaki; and Yamaya, Koji, 5,702,347, Cl. 600-121.000.
Nalbandian, Vahakn; and Lee, Choon Sae, to United States of America, Army. Double layer circularly polarized antenna with single feed. 5,703,601, Cl. 343-700.0MS.
Nalco Chemical Company: *See*—
McCoy, William F.; and Hoots, John E., 5,702,684, Cl. 424-10.300.
Sommese, Anthony G.; and Sivakumar, Ananthasubramanian, 5,702,613, Cl. 210-708.000.
Nam, Hyo-Yun; and Suh, Young-Ho, to Samsung Electronics Co., Ltd. Failed memory cell repair circuit of semiconductor memory. 5,703,816, Cl. 365-200.000.
Nam, Sang Hoon: *See*—
Kim, Su Ung; Kim, Dong Yeon; Chung, Gi ju; Hong, Sung Kol; Park, Sung Jun; Nam, Sang Hoon; and Lee, Yong Suk, 5,703,097, Cl. 514-338.000.
Namiki, Takefumi, to Fujitsu Limited. Wave analyzing apparatus and wave analyzing method. 5,703,787, Cl. 364-487.000.
Naoe, Toshiyuki: *See*—
Nonaka, Tsutomu; Naoe, Toshiyuki; Sato, Hirofumi; Nishimura, Toshihiko; and Suzuki, Naohisa, 5,703,579, Cl. 341-50.000.
Naqvi, S. Sohail H.: *See*—
McNeil, John R.; Naqvi, S. Sohail H.; and Wilson, Scott R., 5,703,692, Cl. 356-445.000.
Narita, Toshihiko; Nakamura, Hiroaki; Katakura, Kazuhiko; and Nakaya, Yoshihito, to Fuji Photo Film Co., Ltd. Shading correction method, photographic printer and index print production apparatus. 5,703,671, Cl. 355-32.000.
Narui, Hironobu: *See*—
Doi, Masato; Narui, Hironobu; and Nakao, Takashi, 5,703,863, Cl. 369-112.000.
Nash, Richard A.; and Storb, Rainer, to Fred Hutchinson Cancer Research Center. DNA encoding canine granulocyte macrophage colony stimulating factor. 5,702,919, Cl. 435-69.500.
National Banner Company, Inc.: *See*—
Gallemore, William E., II, 5,702,081, Cl. 248-218.400.
National Science Council: *See*—
Whang, Wha-Tzong, 5,702,636, Cl. 252-299.010.
National Semiconductor Corporation: *See*—
Ghaffaripour, Parviz; Kalb, Arthur J.; Johnson, Nick M.; and Ting, Sai L., 5,703,529, Cl. 330-51.000.
Smith, Gregory J., 5,703,463, Cl. 320-13.000.
National Starch and Chemical Investment Holding Corporation: *See*—
Schultz, Rose Ann; and Fenelli, Steven P., 5,703,195, Cl. 528-103.000.
Natschke, Scott: *See*—
Kanjo, Wajih; Smith, Eric; Demoise, Thomas J.; Girotti, Michael; McCabe, Thomas; Fessler, Charles B.; and Natschke, Scott, 5,701,974, Cl. 188-1.11R.
Naudet, Jacky Serge: *See*—
Charbonnel, Jean-Louis; Franchet, Michel; and Naudet, Jacky Serge, 5,702,217, Cl. 411-909.000.
Naumann, John O.: *See*—
Baltazar, Lawrence C.; and Naumann, John O., 5,702,294, Cl. 451-541.000.
Nawa, Masayoshi: *See*—
Yoshida, Satoshi; Yanagi, Hideki; Sakai, Kouichi; and Nawa, Masayoshi, 5,702,510, Cl. 106-31.600.
Naylor, Alan: *See*—
Armour, Duncan Robert; Evans, Brian; Middlemiss, David; Naylor, Alan; Pegg, Neil Anthony; Vinader, Maria Victoria; Giblin, Gerard Martin Paul; Hubbard, Tania; Hann, Michael Menteith; Lewell, Xiao-Qing; and Watson, Stephen Paul, 5,703,240, Cl. 546-210.000.
NCR Corporation: *See*—
Hester, John; and Schwartz, Krista S., 5,704,042, Cl. 395-200.340.
Nebel, Gerhard; Georgakos, Georg; and Kleine, Ulrich, to Siemens Aktiengesellschaft. BiCMOS operational amplifier for switch/capacitor circuits. 5,703,533, Cl. 330-253.000.
Nebuloni, Daniela; and Fassina, Andrea, to SGS-Thomson Microelectronics S.r.L. Audio amplifier turn-off control circuit. 5,703,528, Cl. 330-51.000.
NEC Corporation: *See*—
Endo, Kazuhiko, 5,702,773, Cl. 427-573.000.
Hamada, Satoshi, 5,703,711, Cl. 359-341.000.
Hara, Masanori, 5,703,958, Cl. 382-124.000.
Hayakawa, Yuuichi; Saitoh, Shinichi; Matsuzaki, Isao; and Kayama, Masayoshi, 5,703,739, Cl. 360-121.000.
Hirata, Masaru, 5,703,509, Cl. 327-119.000.
Ikeda, Hiroaki, 5,703,822, Cl. 365-221.000.
Isa, Satoshi, 5,703,824, Cl. 365-225.700.
Isobe, Akira, 5,702,291, Cl. 451-41.000.
Itoh, Yukio, 5,703,390, Cl. 257-337.000.
Kohno, Takaki, 5,703,820, Cl. 365-204.000.
Kuhara, Shigeru; and Toyoshima, Hideo, 5,703,815, Cl. 365-194.000.
Kurihara, Kenichi, 5,703,396, Cl. 257-692.000.
Miwada, Kazuo, 5,703,640, Cl. 348-272.000.
Miyamoto, Shigeyuki, 5,702,915, Cl. 435-32.000.
Miyashita, Yukio; and Nishiyama, Toshiro, 5,703,572, Cl. 340-825.440.
Murase, Tutomu, 5,703,870, Cl. 370-232.000.
Nakamura, Toyokazu; Hanagama, Yasuko; Tsujide, Tohru; and Morohashi, Kenji, 5,703,492, Cl. 324-751.000.
Ogura, Ichiro, 5,703,898, Cl. 372-96.000.
Ohnishi, Yoshitake; Fujita, Jun-Ichi; Arduini, Arturo; Casnati, Alessandro; Pochini, Andrea; and Ungaro, Rocco, 5,702,620, Cl. 216-49.000.
Ohno, Kazuki, 5,704,059, Cl. 395-515.000.
Ohta, Mutsumi, 5,703,799, Cl. 364-725.000.
Ozaki, Hideharu, 5,703,884, Cl. 371-22.300.
Sasaki, Tatsuya; and Takeuchi, Takeshi, 5,703,974, Cl. 385-14.000.
Takizawa, Teruo, 5,703,982, Cl. 385-78.000.
Tanaka, Kazuyoshi, 5,703,659, Cl. 348-576.000.
Wakahara, Ken, 5,702,562, Cl. 156-626.100.
Yamada, Hiromu; and Okabe, Seiji, 5,703,326, Cl. 174-50.520.
Yasuhiro, Takai, 5,703,830, Cl. 365-233.000.
Ned, Alexander A.: *See*—
Kurtz, Anthony D.; Bemis, Andrew V.; Nunn, Timothy A.; and Ned, Alexander A., 5,702,619, Cl. 216-2.000.
Neff, Nicola: *See*—
Lewis, Michael E.; Kauer, James C.; Smith, Kevin R.; Callison, Kathleen V.; Baldino, Frank; Neff, Nicola; and Iqbal, Mohamed, 5,703,045, Cl. 514-12.000.
Neidlinger, Donald: *See*—
Benore, Randolph C.; Gagliano, Joseph; Gibson, Shawn; Grosswiller, Leo J.; McGeorge, Gram; and Neidlinger, Donald, 5,701,828, Cl. 109-56.000.
Neiger, Benjamin: *See*—
Gershen, Bernard; Krajci, Edward; and Neiger, Benjamin, 5,703,458, Cl. 318-799.000.
Nellcor Puritan Bennett Incorporated: *See*—
Groenke, Allen W., 5,701,891, Cl. 128-205.290.
Nelson, Charles L.: *See*—
Mazurek, Carol; Nelson, Charles L.; Hodges, Steven C.; and Scheffel, James W., 5,702,953, Cl. 436-69.000.
Nelson, Thomas S.: *See*—
Groves, Oliver J.; Jensen, Donald A.; Nelson, Thomas S.; and Thomas, Joel M., 5,701,651, Cl. 29-281.500.
Nelson, Timothy S., to Medtronic, Inc. Lined infusion catheter. 5,702,372, Cl. 604-264.000.
Nemazi, John E.: *See*—
Kurihara, Katsumi; Kawamoto, Shiro; Nemazi, John E.; and Conger, William G., 5,701,855, Cl. 123-73.0AD.
Nemoto, Masaru. Method of fabricating article by using non-sand core and article produced thereby, and core structure. 5,702,628, Cl. 249-61.000.
NeoMagic Corporation: *See*—
Puar, Deepraj S.; and Ranganathan, Ravi, 5,703,806, Cl. 365-181.000.
Neri, Armando; and Turra, Mario, to G.D Societa' Per Azioni. Method and machine for producing wrappings for products. 5,701,725, Cl. 53-466.000.

Nerone, Louis R., to General Electric Company. Lamp power supply circuit with electronic feedback circuit for switch control. 5,703,439, Cl. 315-209.000.
Nesbitt, Gregory S.; and Shoemaker, Robert D., to Delavan Inc. Method and apparatus for purging of gas turbine injectors. 5,701,732, Cl. 60-39.060.
Nesper, Markus: *See*—
Back, Lothar; Herrmann, Gebhard; Nesper, Markus; and Weisshaupt, Dieter, 5,702,411, Cl. 606-157.000.
Nestec S.A.: *See*—
Reutimann, Ernest, 5,702,741, Cl. 426-92.000.
Neubauer, Jerry Lee: *See*—
Berberich, James William; Berg, Lowell James; Boutaghou, Zine-Eddine; Heath, John S.; and Neubauer, Jerry Lee, 5,703,734, Cl. 360-97.020.
Neukam, Helmut, to P.E.E.M. Förderanlagen Gesellschaft m.b.H. Loading device. 5,701,719, Cl. 53-247.000.
Neurogen Corporation: *See*—
Chen, Xi; and Yuan, Jun, 5,703,083, Cl. 514-255.000.
Chen, Xi; and Wasley, Jan William Francis, 5,703,237, Cl. 544-380.000.
Yuan, Jun; and Chen, Xi, 5,703,235, Cl. 544-363.000.
New, Anthony C.: *See*—
Mitchell, Michael L.; Fite, Barry Alan; Saito, Akiya; and New, Anthony C., 5,703,858, Cl. 369-58.000.
New Oji Paper Co., Ltd.: *See*—
Nishioka, Makoto; Yamane, Kazuo; Nishimura, Masaki; and Takahashi, Yoshiyuki, 5,702,850, Cl. 430-19.000.
New Venture Gear, Inc.: *See*—
Bakowski, Richard A.; and Eastman, Richard E., 5,702,321, Cl. 475-199.000.
New Wave Research: *See*—
Leong, Tony P.; North, Edward S.; and Herbst, Richard Linsley, 5,703,713, Cl. 359-352.000.
Newell, Arthur E. Trauma unit for vehicle. 5,702,142, Cl. 296-19.000.
Newkome, George R.; and Weis, Claus, to University of South Florida. Method of utilizing isocyanate linkage for forming multi-tier cascade polymers. 5,703,271, Cl. 560-190.000.
Newman, Virginia S.: *See*—
Berry, Joel L.; Ferrario, Carlos M.; Dean, Richard H.; and Newman, Virginia S., 5,702,419, Cl. 606-198.000.
NGK Insulators, Ltd.: *See*—
Hayakawa, Koji; Nakajima, Isao; and Utsumi, Yusuke, 5,702,731, Cl. 425-125.000.
Kozakai, Motokazu; Aoyama, Kunitoshi; and Sahasi, Masahiko, 5,702,053, Cl. 229-87.020.
NGK Spark Plug Co., Ltd.: *See*—
Sugimoto, Makoto; Musasa, Mamoru; Tanabe, Hiroyuki; and Konishi, Masahiro, 5,702,998, Cl. 501-97.000.
Nguyen, Chung T.: *See*—
O'Brien, Francis J., Jr.; Nguyen, Chung T.; and Hammel, Sherry E., 5,703,906, Cl. 375-316.000.
Nguyen, Hugh P. Multi-dot dither matrix generation. 5,703,695, Cl. 358-298.000.
Nguyen, Loi N.: *See*—
Chan, Tsiu C.; Bryant, Frank R.; and Nguyen, Loi N., 5,702,979, Cl. 437-187.000.
Nguyen, Long Thanh, to Valmont Industries, Inc. Line current filter for less than 10% total harmonic distortion. 5,703,438, Cl. 315-291.000.
Ni, Chong Yang. Multi-functional fabricating system for welding electrodes. 5,701,648, Cl. 29-33.00R.
Niagara Mohawk Power Corporation: *See*—
Merritt, Carey M., 5,702,609, Cl. 210-669.000.
Nichias Corporation: *See*—
Akamatsu, Mikio; Seki, Kenji; Yamashita, Katsuhiro; Kobayashi, Takeya; and Taniguchi, Takashi, 5,701,762, Cl. 62-636.000.
Nicholas, Patrick Samuel, Jr.: *See*—
Bikson, Benjamin; Giglia, Salvatore; Nicholas, Patrick Samuel, Jr.; and Ford, Cheryl Ann, 5,702,601, Cl. 210-321.790.
Nicholson, Myron Donald; Kajiwara, Edward Makoto; and DuCharme, Paul Edmund, Jr., to Viskase Corporation. Food casing of nonderivatized cellulose. 5,702,783, Cl. 428-34.800.
Nickel, Gary B.; and Berger, Bernhard, to Parrish & Heimbecker, Limited. Method for acylation of starch. 5,703,226, Cl. 536-107.000.
Nied-Menninger, Thomas; Körtge, Randolf; and Denfeld, Bernd, to Luk Fahrzeug-Hydraulik GmbH & Co. Vane pump. 5,702,242, Cl. 418-150.000.
Nielsen, Arne Bendix. Container having a child-proof, cup-shaped closure. 5,702,014, Cl. 215-217.000.
Nielsen, Robert Louis: *See*—
Allen, Wade C.; Goodwin, Jeremy Philip; Nielsen, Robert Louis; Reder, Paul Joseph; and Toltzman, Douglas, 5,704,041, Cl. 395-200.150.
Niemi, Carl A.: *See*—
Luedke, Thomas J.; Aagaard, Randy G.; Niemi, Carl A.; and Shea, Andrew J., 5,701,703, Cl. 52-36.500.
Nienhaus, Clemens: *See*—
Adamek, Wolfgang; Kretschmer, Horst; Entrup, Hubert Grosse; Nienhaus, Clemens; Herchenbach, Paul; Sarfert, Andreas; Kämpf, Klaus; and Schott, Wilhelm, 5,702,306, Cl. 464-172.000.
Nifco, Inc.: *See*—
Asami, Goro, 5,702,146, Cl. 296-96.210.
Nigam, Anurag: *See*—
Shadan, Victor; and Nigam, Anurag, 5,703,803, Cl. 365-49.000.
Niikura, Satoshi; Suzuki, Takako; Doi, Kousuke; Kohara, Hidekatsu; and Nakayama, Toshimasa, to Tokyo Ohka Kogyo Co., Ltd. Positive photoresist composition. 5,702,861, Cl. 430-191.000.
Niimi, Masahiro: *See*—
Mikami, Ichizou; Komasaka, Toshio; Niimi, Masahiro; and Miyamoto, Takashi, 5,704,031, Cl. 395-182.020.
Niki, Toru; Kugai, Nasami; and Nakatsuka, Tadanori, to Canon Kabushiki Kaisha. Image processing method and apparatus. 5,703,962, Cl. 382-173.000.
Nikkiso Co., Ltd.: *See*—
Fukao, Tadashi; Chiba, Akira; and Michioka, Chikara, 5,703,423, Cl. 310-90.500.
Nikolaychik, Leonid V.: *See*—
Nikolaychik, Victor V.; Burdick, Brent A.; and Nikolaychik, Leonid V., 5,702,715, Cl. 424-402.000.
Nikolaychik, Victor V.; Burdick, Brent A.; and Nikolaychik, Leonid V., to Drying Technology. Reinforced biological sealants. 5,702,715, Cl. 424-402.000.
Nikon Corporation: *See*—
Aoki, Masayuki, 5,703,725, Cl. 359-683.000.
Furuta, Akiko, 5,703,716, Cl. 359-431.000.
Hiraiwa, Hiroyuki; Nakagawa, Kazuhiro; Jinbo, Hiroki; Takano, Jun; and Fujiwara, Seishi, 5,702,495, Cl. 65-17.100.
Hirukawa, Shigeru; Shiraishi, Naomasa; and Kameyama, Masaomi, 5,703,675, Cl. 355-53.000.
Komine, Norio; Jinbo, Hiroki; Fujiwara, Seishi; and Hiraiwa, Hiroyuki, 5,703,712, Cl. 359-350.000.
Nilsen, Curt A., to Sandia Corporation. Method for transferring data from an unsecured computer to a secured computer. 5,703,562, Cl. 340-286.020.
Ninomiya, Kazuki; Sumida, Keizo; Miyake, Jiro; and Nishiyama, Tamotsu, to Matsushita Electric Industrial Co., Ltd. Signal processor. 5,703,800, Cl. 364-736.000.
Ninomiya, Takayuki: *See*—
Akiyama, Yuji; Morimura, Kazuhiko; Matsumoto, Masashi; Sugama, Sadayuki; Kamada, Masashi; and Ninomiya, Takayuki, 5,704,019, Cl. 395-101.000.
Ninomiya, Yuichi: *See*—
Miyazaki, Shigeyuki; Yokokawa, Hiroshi; and Ninomiya, Yuichi, 5,703,637, Cl. 348-53.000.
Nio, Yutaka: *See*—
Izawa, Yosuke; Tani, Masahiro; Okumura, Maoji; Nio, Yutaka; and Sato, Toshichika, 5,703,653, Cl. 348-445.000.
Nippon Columbia Co., Ltd.: *See*—
Kobayashi, Masakazu; and Kato, Yoshikazu, 5,703,868, Cl. 369-286.000.
Nippon Hoso Kyokai: *See*—
Miyazaki, Shigeyuki; Yokokawa, Hiroshi; and Ninomiya, Yuichi, 5,703,637, Cl. 348-53.000.
Nippon Kayaku Kabushiki Kaisha: *See*—
Yokoshima, Minoru; Ohkubo, Tetsuo; Sasahara, Kazunori; Sato, Yoneji; and Baba, Yoko, 5,702,820, Cl. 428-413.000.
Nippon Mining & Metals Co., Ltd.: *See*—
Hashiuchi, Fumio; Hirai, Yushirou; and Iwasaki, Eiji, 5,702,758, Cl. 427-133.000.
Nippon Oil Company Limited: *See*—
Inoue, Kiyoshi; and Hirata, Masakuni, 5,701,862, Cl. 123-196.00S.
Matsumoto, Takayuki; Ikeda, Tetsufumi; and Kojima, Akiyoshi, 5,702,795, Cl. 428-66.600.
Sasaki, Makoto; and Sato, Hisatake, 5,702,630, Cl. 252-62.520.
Yoshida, Sumio; Komazawa, Takashi; Kurihara, Kazuhiko; and Yazawa, Hiroshi, 5,702,657, Cl. 264-112.000.
Nippon Paint Co. Ltd.: *See*—
Sato, Akihiko; Mizutani, Kenzo; Kawabata, Masami; and Sumiyoshi, Iwao, 5,702,846, Cl. 430-2.000.
Nippon Petrochemicals Company, Limited: *See*—
Sugita, Yukio; Aihara, Kintaro; Ishiyama, Sadayuki; and Yamada, Jun, 5,702,798, Cl. 428-131.000.
Nippon Polytech Corp.: *See*—
Yokoshima, Minoru; Ohkubo, Tetsuo; Sasahara, Kazunori; Sato, Yoneji; and Baba, Yoko, 5,702,820, Cl. 428-413.000.
Nippon Sanso Corporation: *See*—
Ishihara, Yoshio; Masusaki, Hiroshi; Wu, Shang-Qian; and Matsumoto, Koh, 5,703,365, Cl. 250-339.130.
Nippon Shinyaku Co. Ltd.: *See*—
Ohgi, Tadaaki; and Yano, Junichi, 5,703,224, Cl. 536-29.200.
Nippon Shokubai Co., Ltd.: *See*—
Nakagawa, Koichi; Makino, Mitsuaki; and Kita, Yuichi, 5,703,270, Cl. 560-183.000.
Nippon Signal Co., Ltd., The: *See*—
Futsuhara, Koichi, 5,703,452, Cl. 318-558.000.
Nippon Soken, Inc.: *See*—
Morishima, Shingo; Yamada, Jun; Kanehara, Kenji; and Yoshinaga, Tohru, 5,701,736, Cl. 60-297.000.
Nippon Steel Corporation: *See*—
Iizuka, Akira, 5,703,654, Cl. 348-446.000.
Kubomura, Kenji; Kimura, Hiromi; and Shibata, Hirotaka, 5,702,993, Cl. 442-204.000.
Nonaka, Tsutomu; Naoe, Toshiyuki; Sato, Hirofumi; Nishimura, Toshihiko; and Suzuki, Naohisa, 5,703,579, Cl. 341-50.000.
Shimokawa, Kenji; Dohnomae, Hitoshi; Mukai, Toshio; and Shimanoe, Kengo, 5,702,793, Cl. 428-64.300.

Nippon Zeon Co., Ltd.: *See*—
Tsuji, Suguru; and Uchizono, Yuichi, 5,703,189, Cl. 526-338.000.
Nippondenso Co, Ltd.: *See*—
Yamaguchi, Hiroyuki; Naito, Masayuki; Inayoshi, Satoshi; Doi, Nobuyuki; Saida, Kazunori; and Sumiya, Yasuhiko, 5,701,949, Cl. 165-42.000.
Nippondenso Co., Ltd.: *See*—
Aoyama, Tooru; Tanaka, Shigeru; and Tanaka, Kouzi, 5,703,472, Cl. 322-28.000.
Iritani, Kunio, 5,701,753, Cl. 62-211.000.
Mizutani, Takashi, 5,703,419, Cl. 310-49.00R.
Muramatsu, Masayoshi; and Ozaki, Masaaki, 5,703,665, Cl. 349-60.000.
Nakatani, Kazushi; Takagi, Akira; and Yokoyama, Hajime, 5,701,982, Cl. 192-3.300.
Oda, Teruo, 5,703,932, Cl. 379-58.000.
Sobue, Susumu; Yamauchi, Takeshi; and Mukainakano, Shinichi, 5,703,403, Cl. 257-751.000.
Suzuki, Kazutaka; Yamanaka, Yasutoshi; and Sugimoto, Tatsuo, 5,701,852, Cl. 123-41.140.
Nipponsoken, Inc.: *See*—
Tsunokawa, Masaru; Ozaki, Yukikatsu; Onimaru, Sadahisa; and Suzuki, Takahisa, 5,701,752, Cl. 62-183.000.
Nishi, Yutaka: *See*—
Yamamoto, Yorihisa; Nishi, Yutaka; Nishimori, Takashi; Tokunaga, Hiroyuki; and Machino, Hideki, 5,703,775, Cl. 364-424.051.
Nishida, Akira: *See*—
Yokoi, Shinji; Nishida, Akira; Obata, Tokio; and Goka, Kouichi, 5,703,064, Cl. 514-80.000.
Nishijima, Motoaki: *See*—
Mitate, Takehito; and Nishijima, Motoaki, 5,702,843, Cl. 429-218.000.
Nishikawa, Hiroshi: *See*—
Omura, Kazuhiko; Iguchi, Masayoshi; Yoshiyama, Masatoshi; and Nishikawa, Hiroshi, 5,703,996, Cl. 386-68.000.
Nishikawa, Kohei: *See*—
Naka, Takehiko; Nishikawa, Kohei; and Kato, Takeshi, 5,703,110, Cl. 514-396.000.
Nishimori, Jun: *See*—
Nagano, Toshihiro; Sato, Yoshiaki; Nishimori, Jun; and Tachibana, Fusao, 5,701,856, Cl. 123-73.0AD.
Nishimori, Takashi: *See*—
Yamamoto, Yorihisa; Nishi, Yutaka; Nishimori, Takashi; Tokunaga, Hiroyuki; and Machino, Hideki, 5,703,775, Cl. 364-424.051.
Nishimura, Koichi; and Matsumiya, Masato, to Fujitsu Limited. Semiconductor memory device having dual boosting circuits to reduce energy required to supply boosting voltages. 5,703,814, Cl. 365-189.090.
Nishimura, Masaki: *See*—
Nishioka, Makoto; Yamane, Kazuo; Nishimura, Masaki; and Takahashi, Yoshiyuki, 5,702,850, Cl. 430-19.000.
Nishimura, Masayuki; Sogabe, Kiyoshi; Tanaka, Hiroyuki; and Arai, Shinji, to Gunze Limited. Polypropylene heat shrinkable film. 5,702,784, Cl. 428-34.900.
Nishimura, Toru, to Fuji Photo Film Co., Ltd. Film viewer for film having magnetic layer. 5,702,169, Cl. 353-25.000.
Nishimura, Toshihiko: *See*—
Nonaka, Tsutomu; Naoe, Toshiyuki; Sato, Hirofumi; Nishimura, Toshihiko; and Suzuki, Naohisa, 5,703,579, Cl. 341-50.000.
Nishimura, Yoichi: *See*—
Munakata, Hiroki; Nishimura, Yoichi; Kitagawa, Hiroshi; and Akazaki, Shusuke, 5,701,871, Cl. 123-491.000.
Nishino, Yutaka: *See*—
Nishitani, Yasuhiro; Irie, Tadashi; and Nishino, Yutaka, 5,703,243, Cl. 548-541.000.
Nishio, Tomonori, to Fuji Photo Film Co., Ltd. Image forming device and method having plural image projecting paths. 5,703,674, Cl. 355-46.000.
Nishioka, Makoto; Yamane, Kazuo; Nishimura, Masaki; and Takahashi, Yoshiyuki, to New Oji Paper Co., Ltd. Thermosensitive reversible color-developing and disappearing agent. 5,702,850, Cl. 430-19.000.
Nishioka, Tadashi: *See*—
Sakata, Hirofumi; and Nishioka, Tadashi, 5,702,849, Cl. 430-5.000.
Nishitani, Yasuhiro; Irie, Tadashi; and Nishino, Yutaka, to Shionogi Seiyaku Kabushiki Kaisha. Intermediates for pyrrolidylthiocarbapenem derivative. 5,703,243, Cl. 548-541.000.
Nishiyama, Kiyoharu, to Ricoh Company, Ltd. Image data store device. 5,703,628, Cl. 345-202.000.
Nishiyama, Tamotsu: *See*—
Ninomiya, Kazuki; Sumida, Keizo; Miyake, Jiro; and Nishiyama, Tamotsu, 5,703,800, Cl. 364-736.000.
Tsubata, Shintaro; and Nishiyama, Tamotsu, 5,703,802, Cl. 364-760.000.
Nishiyama, Toshiro: *See*—
Miyashita, Yukio; and Nishiyama, Toshiro, 5,703,572, Cl. 340-825.440.
Nishizawa, Hiroyuki: *See*—
Ohtomo, Fumio; Hayashi, Kunihiro; Kodaira, Jun-ichi; Nishizawa, Hiroyuki; and Yoshino, Kenichiro, 5,703,718, Cl. 359-494.000.
Nishizawa, Yoshinori: *See*—
Ichinose, Susumu; Nishizawa, Yoshinori; Ohuchi, Atsushi; Kidena, Hideshi; and Hotta, Mitsuyuki, 5,702,691, Cl. 424-70.100.
Nissan Motor Co., Ltd.: *See*—
Satou, Masaharu; Kasahara, Tamiyoshi; Murakami, Takuya; Kawagoe, Kenji; Uno, Takaaki; Aimoto, Hideo; and Horiuchi, Tamaki, 5,702,122, Cl. 280-691.000.
Nisshin Flour Milling Co., Ltd.: *See*—
Imai, Shinjirou, 5,702,922, Cl. 435-71.200.
Sugiura, Masahisa; Okada, Kazuhiro; and Nagata, Sadao, 5,702,749, Cl. 426-638.000.
Nissim, Ofer; and Goldblatt, Marc, to Ark Foundation, LLC. Support for balancing sculpture. 5,702,085, Cl. 248-475.100.
NitroMed, Inc.: *See*—
Garvey, David S.; Letts, L. Gordon; Renfroe, H. Burt; and Tam, Sang William, 5,703,073, Cl. 514-226.500.
Nitta, Katsuhisa; Shau, Tan Ming; and Sugahara, Jun, to Merck Patent Gesellschaft mit ceschrankter Haftung. Flaky aluminum oxide and pearlescent pigment, and production thereof. 5,702,519, Cl. 106-442.000.
NKK Corporation: *See*—
Ishida, Naruo; Saijyo, Yoshio; Arakawa, Shingo; Watanabe, Kimiaki; and Inaba, Hidehiro, 5,703,295, Cl. 73-593.000.
Noda, Hidenobu, to Sony Corporation. Tracking servo correction control circuit. 5,703,849, Cl. 369-44.290.
Noda, Junichiro; and Tohyama, Daisuke, to Kabushiki Kaisha Toshiba. Method of manufacturing a semiconductor memory device. 5,702,966, Cl. 437-43.000.
Noda, Mitsuo, to Howa Machinery, Ltd. Linear actuating device. 5,701,798, Cl. 92-88.000.
Noda, Sukehisa: *See*—
Majumdar, Gourab; Iwagami, Tooru; and Noda, Sukehisa, 5,703,399, Cl. 257-723.000.
Noguchi, Masatoshi: *See*—
Watanabe, Toshiya; Noguchi, Masatoshi; Toyozawa, Takeshi; and Morita, Minoru, 5,702,188, Cl. 400-120.050.
Nokia Mobile Phones Limited: *See*—
Martensson, Nils Erik Vilhelm, 5,703,931, Cl. 379-58.000.
Ojanpera, Tero; and Keskitalo, Ilkka, 5,703,873, Cl. 370-332.000.
Nokia Technology GmbH: *See*—
Geisenberger, Stefan, 5,703,337, Cl. 181-206.000.
Nokia Telecommunications Oy: *See*—
Ojanpera, Tero; and Keskitalo, Ilkka, 5,703,873, Cl. 370-332.000.
Särkkä, Veli-Matti, 5,703,548, Cl. 333-235.000.
Nolan, Daniel A.: *See*—
Miller, William J.; and Nolan, Daniel A., 5,703,975, Cl. 385-16.000.
Nomiyama, Takashi: *See*—
Fukunaga, Hideki; Yamaguchi, Shoji; and Nomiyama, Takashi, 5,703,860, Cl. 369-102.000.
Nomura, Syunji: *See*—
Itoh, Noriie; Kunihara, Mineo; Kushida, Hiroshi; McWhorter, William W.; Nomura, Syunji; Ozawa, Kazunori; Taniguchi, Mikio; and Tsuzuki, Kazuo, 5,703,071, Cl. 514-218.000.
Nonaka, Hiromi: *See*—
Suzuki, Fumio; Koike, Nobuaki; Shimada, Junichi; Nakamura, Joji; Shiozaki, Shizuo; Kitamura, Shigeto; Ichikawa, Shunji; Kase, Hiroshi; and Nonaka, Hiromi, 5,703,085, Cl. 514-263.000.
Nonaka, Tsutomu; Naoe, Toshiyuki; Sato, Hirofumi; Nishimura, Toshihiko; and Suzuki, Naohisa, to Nippon Steel Corporation. Decoder for compressed digital signals. 5,703,579, Cl. 341-50.000.
Nordica S.p.A.: *See*—
Gonella, Mario; and Caeran, Francesco, 5,702,113, Cl. 280-11.200.
Nordischer Maschinenbau Rud. Baader Gmbh & Co KG: *See*—
Ketels, Dieter, 5,702,295, Cl. 452-180.000.
Nordman, Robert G.: *See*—
Fischer, Steven M.; Nordman, Robert G.; and Werlich, Mark H., 5,703,360, Cl. 250-288.000.
Nordmeyer, Michael: *See*—
Smith, Daniel; Willis, Bernard M.; Marschke, Kenneth P., Jr.; Littlewood, Barry; Schoen, Vulgens; Gacker, Carl; Nordmeyer, Michael; and Miklewicz, Thaddeus, 5,701,656, Cl. 29-558.000.
Noritsu Koki Co., Ltd.: *See*—
Yamamoto, Yuji; and Ishikawa, Masazumi, 5,703,701, Cl. 358-487.000.
Norkus, James F.: *See*—
Pavur, Carol P.; Harper, Dennis; Bonnell, Steven W.; Norkus, James F.; Hartery, William F.; and Galloway, Lawrence W., 5,702,133, Cl. 292-80.000.
Norman, Michael P.; and Jachimowicz, Karen E., to Motorola. Electronic game system. 5,702,305, Cl. 463-42.000.
Normile, James, to LG Electronics, Inc. Method of lossy decoding of bitstream data. 5,703,697, Cl. 358-433.000.
Norris, Mark D.: *See*—
Weeks, Anthony R.; Norris, Mark D.; and Switzer, Steven A., 5,703,493, Cl. 324-755.000.
North, Edward S.: *See*—
Leong, Tony P.; North, Edward S.; and Herbst, Richard Linsley, 5,703,713, Cl. 359-352.000.
Northern Magnetics, Inc.: *See*—
Asaa, Shlomo, 5,703,418, Cl. 310-12.000.
Northern Telecom: *See*—
MacElwee, Thomas; Kovacic, Stephen J.; and Ojha, Jugnu J., 5,703,980, Cl. 385-49.000.
Northern Telecom Limited: *See*—
Cullen, Thomas John, 5,703,976, Cl. 385-28.000.
Northrop Grumman Corporation: *See*—
Campbell, Thomas A.; Schreiber, Heinz H.; and Yioves, Niki, 5,703,593, Cl. 342-96.000.
Northwestern Univeristy: *See*—

Makhlouf, Samar; Pankow, Mark L.; Anderson, Byron E.; and Bean, Pamela, 5,702,904, Cl. 435-7.100.

Nose, Yoshimasa: *See—*

Ohtani, Yasuo; Kataho, Takuo; Satoh, Makoto; Tanaka, Tsutomu; Nose, Yoshimasa; Kobayashi, Kazuyoshi; Uchikawa, Tetsuhide; and Hamahata, Toshihiro, 5,703,901, Cl. 373-109.000.

Notohamiprodjo, Hubertus; and Kukiatsakalchai, Kata, to Electronic Lighting Incorporated. Method and apparatus for interfacing a light dimming control with an automated control system. 5,703,442, Cl. 315-307.000.

Nouchi, Pascale: *See—*

Brehm, Claude; Boniort, Jean-Yves; Nouchi, Pascale; and Auge, Jacques, 5,703,986, Cl. 385-123.000.

Novak, John; and Stivison, Lloyd, to AGR International, Inc. Speed adjusting apparatus for containers. 5,701,990, Cl. 198-604.000.

Novak, Joseph R. Toy vehicle game and methods of playing the game. 5,702,107, Cl. 273-442.000.

Novartis Corporation: *See—*

Odink, Karel Gerrit; Clerc, Roger; Cerletti, Nico; Brüggen, Josef; Tarcsay, Lajos; Sorg, Clemens; and Wiesendanger, Walter, 5,702,920, Cl. 435-69.500.

Novartis Finance Corporation: *See—*

Roberts, Walden K.; Selitrennikoff, Claude P.; Lane, Bridget E.; and Potter, Sharon L., 5,703,044, Cl. 514-12.000.

Novick, Michael Alexander; and Belanger, Roger Robert, to Harris, Heidelberg; and Heidelberger Druckmaschinen AG. Mechanism for diverting signatures by the rotation of surfaces. 5,702,100, Cl. 271-302.000.

Novo Nordisk A/S: *See—*

Hastrup, Sven; Branner, Sven; Jørgensen, Birthe Ravn; Christensen, Tove; Jørgensen, Birgitte Bojer; Shuster, Jeffrey R.; Madden, Mark; Moyer, Donna L.; and Fuglsang, Claus, 5,702,934, Cl. 435-183.000.

Novo Nordisk Biotech, Inc.: *See—*

Hastrup, Sven; Branner, Sven; Jørgensen, Birthe Ravn; Christensen, Tove; Jørgensen, Birgitte Bojer; Shuster, Jeffrey R.; Madden, Mark; Moyer, Donna L.; and Fuglsang, Claus, 5,702,934, Cl. 435-183.000.

Novosel, David: *See—*

Takata, Hidekazu; Mnich, Thomas; and Novosel, David, 5,703,804, Cl. 365-143.000.

Nozaki, Nobuharu; Mitsumoto, Shinji; Kubo, Kazumi; and Kobayashi, Fumio, to Fuji Photo Film Co., Ltd.; and Fuji Photo Optical Co., Ltd. Laser-diode-pumped solid state laser and method of manufacturing the same. 5,703,900, Cl. 372-107.000.

Nozawa, Tohru: *See—*

Koyama, Seiji; Nozawa, Tohru; Terukina, Asao; and Suzuki, Yasusuke, 5,703,582, Cl. 341-120.000.

NSK, Ltd.: *See—*

Sakai, Kouichi; Oumi, Hayato; and Suzuki, Hiroshi, 5,702,315, Cl. 474-94.000.

Yamaguchi, Toshiaki; Takahashi, Nobumitsu; and Yamaguchi, Hiroki, 5,701,677, Cl. 33-1.00M.

NTN Corporation: *See—*

Kawashima, Kazuki; Katogi, Sadaji; and Hida, Yoshikazu, 5,702,317, Cl. 474-110.000.

NTT Mobile Communications Network, Inc.: *See—*

Nakajima, Akihisa; Yabusaki, Masami; Hirata, Shoichi; Yamaguchi, Kenichi; Fujiwara, Shiokazu; Maruyama, Yasuo; Uchiyama, Yasuyuki; and Takemoto, Eriko, 5,703,941, Cl. 379-201.000.

Nu-Tech & Engineering, Inc.: *See—*

Salmon, Michael E.; and Pankey, Brent W., 5,703,612, Cl. 345-75.000.

Nuber, Ray; Moroney, Paul; and Walker, G. Kent, to General Instrument Corporation of Delaware. Acquisition and error recovery of audio data carried in a packetized data stream. 5,703,877, Cl. 370-395.000.

Nucida, Gilberto: *See—*

Cavallotti, Claudio; Nucida, Gilberto; and Troglia, Claudio, 5,703,242, Cl. 548-473.000.

Cavallotti, Claudio; Nucida, Gilberto; and Troglia, Claudio, 5,703,245, Cl. 548-473.000.

Nukada, Katsumi: *See—*

Mashimo, Kiyokazu; Ojima, Fumio; Ishii, Toru; and Nukada, Katsumi, 5,702,856, Cl. 430-96.000.

Numata, Shigeaki; and Shibuya, Souichi, to Kawasaki Kasei Chemicals Ltd. Method for the treatment of waste water. 5,702,615, Cl. 210-759.000.

Numata, Shoko: *See—*

Takata, Asami; Numata, Shoko; Mizukami, Yuichi; Sekiyama, Yasushi; and Takahashi, Masato, 5,703,124, Cl. 514-514.000.

Numata, Yoshito; Asada, Hidehisa; Dohi, Keiji; Fukunaga, Takahiro; and Taniguchi, Yasushi, to Shionogi & Co., Ltd. Method of sandwich immunoassay for N-peptide. 5,702,910, Cl. 435-7.940.

Nunn, Timothy A.: *See—*

Kurtz, Anthony D.; Bemis, Andrew V.; Nunn, Timothy A.; and Ned, Alexander A., 5,702,619, Cl. 216-2.000.

Nusbaum, Steve R. Aileron/flap mixing mechanism. 5,702,072, Cl. 244-225.000.

Nussbaum, Howard S.: *See—*

Hsu, Steve I.; Nussbaum, Howard S.; Posey, William P.; and Taylor, Stephen D., 5,703,514, Cl. 327-237.000.

Nutt, Ruth Foelsche: *See—*

Semple, Joseph Edward; Ardecky, Robert John; Nutt, Ruth Foelsche; Ripka, William Charles; Rowley, David C.; Lim-Wilby, Marguerita S. L.; and Brunck, Terence Kevin, 5,703,208, Cl. 530-331.000.

Obata, Tokio: *See—*

Yokoi, Shinji; Nishida, Akira; Obata, Tokio; and Goka, Kouichi, 5,703,064, Cl. 514-80.000.

Oberlander, Michael. Method of meniscal repair. 5,702,462, Cl. 623-20.000.

O'Brien, Francis J., Jr.; Nguyen, Chung T.; and Hammel, Sherry E., to United States of America, Navy. System for assessing stochastic properties of signals representing three items of mutually orthogonal measurement information. 5,703,906, Cl. 375-316.000.

O'Brien, Patrick J.; Thomas, Alvin; Rufo, George, Jr.; Durham, Larry; and Gelardi, Anthony L., to Ivy Hill Corporation. Glueless storage package. 5,701,997, Cl. 206-308.100.

O'Brien, Timothy D., to Speciality Filaments, Inc. Hollow brush bristle with radiating spokes. 5,701,629, Cl. 15-207.200.

Ocean Power Technologies: *See—*

Smalser, Paul, 5,703,474, Cl. 323-299.000.

Ochiai, Shin-Ichiro, to Shimada Precision, Co., Ltd. Light guide plates and light guide plate assembly utilizing diffraction grating. 5,703,667, Cl. 349-65.000.

Ocken, Howard; Findlan, Shane J.; and Phillips, Michael K., to Electric Power Research Insitute, Inc. Cobalt-free hardfacing alloys with improved welding characteristics. 5,702,668, Cl. 420-57.000.

O'Connell, Kathleen M.: *See—*

Gronbeck, Dana A.; O'Connell, Kathleen M.; Burke, William Andrew; Gaudet, Michael N.; and Caporale, Stefan J., 5,702,611, Cl. 210-866.000.

O'Connor, Michael Joseph: *See—*

Whitson, Duane Eugene; O'Connor, Michael Joseph; and Stapert, Curtis Allen, 5,702,254, Cl. 439-57.000.

Oda, Teruo, to Nippondenso Co., Ltd. Cellular telephone with built-in battery and antenna. 5,703,932, Cl. 379-58.000.

Oda, Toshio: *See—*

Tamura, Hiroshi; Oda, Toshio; and Tanaka, Shigenori, 5,702,882, Cl. 435-4.000.

Oda, Tsuyoshi, to Sony Corporation. Picture encoding method, picture encoding apparatus and picture recording medium. 5,703,646, Cl. 348-401.000.

Odachi, Yasuharu; and Tanaka, Katsufumi, to Kabushiki Kaisha Toyoda Jidoshokki Seisakusho. Magnetostrictive torque sensing device. 5,703,298, Cl. 73-862.333.

Odachi, Yasuharu: *See—*

Minoshima, Norimoto; and Odachi, Yasuharu, 5,703,461, Cl. 320-2.000.

Odaka, Hiroshi: *See—*

Goto, Shuichi; Tanaka, Kenichi; and Odaka, Hiroshi, 5,701,996, Cl. 206-287.000.

O'Dell, Robin D.; and Lex, Joseph. Decorative laminate surface layer. 5,702,806, Cl. 428-206.000.

Odenwälder, Heinrich; Langen, Hans; Dahlhaus, Uwe; and Schütz, Heinz-Dieter, to Agfa-Gevaert AG. Color photographic silver halide material. 5,702,877, Cl. 430-551.000.

Odink, Karel Gerrit; Clerc, Roger; Cerletti, Nico; Brüggen, Josef; Tarcsay, Lajos; Sorg, Clemens; and Wiesendanger, Walter, to Novartis Corporation. DNAS encoding human macrophage migration inhibition factor related peptides. 5,702,920, Cl. 435-69.500.

O'Donnell, Boyd, to O'Donnell Family Investment Trust, The. Treatment of soil and plants with a composition containing *Bacillus laterosporus* . 5,702,701, Cl. 424-93.460.

O'Donnell Family Investment Trust, The: *See—*

O'Donnell, Boyd, 5,702,701, Cl. 424-93.460.

Offshack, Edward Robert; Painter, Jeffrey Donald; and Aquino, Melissa Dee, to Procter & Gamble Company, The. Bleach catalyst particles. 5,703,034, Cl. 510-376.000.

Ogasawara, Tadahiko: *See—*

Umeyama, Koichi; Ogasawara, Tadahiko; Yoshino, Kenji; Watanabe, Katsushi; and Koda, Koji, 5,702,384, Cl. 604-892.100.

Ogawa, Hiroaki: *See—*

Watari, Masao; Ishii, Kazuo; Kato, Yasuhiko; Ogawa, Hiroaki; Omote, Masanori; Watanabe, Kazuo; and Minamino, Katsuki, 5,704,013, Cl. 395-23.000.

Oguchi, Minoru: *See—*

Yanagisawa, Hiroaki; Fujita, Takashi; Fujimoto, Koichi; Yoshioka, Takao; Wada, Kunio; Oguchi, Minoru; Fujiwara, Toshihiko; and Horikoshi, Hiroyoshi, 5,703,096, Cl. 514-326.000.

Ogura, Ichiro, to NEC Corporation. Surface emission laser and method of manufacturing the same. 5,703,898, Cl. 372-96.000.

Ogura, Toshihiko: *See—*

Evans, Ronald M.; and Ogura, Toshihiko, 5,702,914, Cl. 435-29.000.

Oh, Seung-Hun; Doh, Gyun-Hae; and Kang, Sun-Woong, to SamSung Electronics Co., Ltd. Method of producing an optical fiber preform from a plurality of tubes having different thermal conductivities. 5,702,497, Cl. 65-412.000.

Ohama, Chiaki, to Minato Company, Ltd. Deodorizing composition and deodorizing resin composition containing iron (II) compound. 5,703,152, Cl. 524-435.000.

Ohashi, Ryota; Okada, Hideaki; and Nagai, Toshio, to Kanzaki Kokyukoki Mfg. Co. Axle drive unit. 5,701,739, Cl. 60-453.000.

Ohashi, Yoshiharu: *See—*

Takahashi, Shin; Ohashi, Yoshiharu; Ando, Yushi; and Okuyama, Toshio, 5,703,267, Cl. 558-451.000.

Ohbayashi, Shigeki: *See—*

Iketani, Masayuki; and Ohbayashi, Shigeki, 5,703,510, Cl. 327-143.000.

Ohgi, Tadaaki; and Yano, Junichi, to Nippon Shinyaku Co. Ltd. Antiviral c-nucleoside derivatives. 5,703,224, Cl. 536-29.200.

Ohkubo, Tetsuo: *See—*

Yokoshima, Minoru; Ohkubo, Tetsuo; Sasahara, Kazunori; Sato, Yoneji; and Baba, Yoko, 5,702,820, Cl. 428-413.000.

Ohmae, Tadayuki; Hisada, Haruhiko; Hosoda, Kenichi; Yoshiya, Masahide; Komori, Yoshiyuki; Yamaguchi, Noboru; Fujiki, Tohru; and Yasuda, Noriyasu, to Marubishi Oil Chemical Co., Ltd.; and Sumitomo Chemical Company, Limited. Modifier for resin and rubber. 5,703,167, Cl. 525-207.000.

Ohmeda Inc.: *See—*

Hunt, William C.; and Meyers, Torin T., 5,703,683, Cl. 356-301.000.

Tham, Robert Q.; and Keitel, Todd, 5,701,888, Cl. 128-204.210.

Ohmi, Tadahiro; and Hirayama, Masaki, to Ohmi, Tadahiro. Instrument for measuring plasma excited by high-frequency. 5,703,488, Cl. 324-464.000.

Ohmizu, Hiroshi: *See—*

Iwasaki, Tameo; Kondo, Kazuhiko; and Ohmizu, Hiroshi, 5,703,234, Cl. 544-50.000.

Ohmura, Taro, to Sony Corporation. Process for producing magnetic recording medium. 5,702,757, Cl. 427-131.000.

Ohnishi, Hiroshi: *See—*

Yamamoto, Yuuri; Takahashi, Kenichi; Ohnishi, Hiroshi; Kunieda, Yoshinori; and Matsubara, Naoki, 5,703,913, Cl. 375-354.000.

Ohnishi, Tetsuya: *See—*

Sakai, Masanori; Kadowaki, Toshihiro; Arakawa, Naoto; and Ohnishi, Tetsuya, 5,703,696, Cl. 358-404.000.

Ohnishi, Yoshitake; Fujita, Jun-Ichi; Arduini, Arturo; Casnati, Alessandro; Pochini, Andrea; and Ungaro, Rocco, to NEC Corporation. Ultrafine pattern forming method and ultrafine etching method using calixarene derivative as negative resist. 5,702,620, Cl. 216-49.000.

Ohno, Hayato; Nakao, Taku; Harada, Hisanobu; Hidesaka, Shinichi; Kohara, Hidekatsu; and Nakayama, Toshimasa, to Tokyo Ohka Kogyo Co., LTD. Positive photoresist coating solution comprising a mixed solvent of propylene glycol monopropyl ether and 2-heptanone. 5,702,862, Cl. 430-191.000.

Ohno, Kazuki, to NEC Corporation. Method of write to graphic memory where memory cells designated by plurality of addresses selected simultaneously for one row address are written. 5,704,059, Cl. 395-515.000.

Ohsawa, Yuichi: *See—*

Iwasaki, Hitoshi; Ohsawa, Yuichi; Kondoh, Reiko; Hashimoto, Susumu; Sawabe, Atsuhito; Kamiguchi, Yuzo; and Sahashi, Masashi, 5,702,832, Cl. 428-611.000.

Ohshima, Noriyoshi: *See—*

Higuma, Masahiko; Ikeda, Masami; Asai, Naohito; Abe, Tsutomu; Kashino, Toshio; Ohshima, Noriyoshi; Okazaki, Takeshi; Sugimoto, Hitoshi; and Tajima, Hiroki, 5,701,995, Cl. 206-205.000.

Ohshima, Shigeo: *See—*

Iwasa, Kiyoaki; and Ohshima, Shigeo, 5,703,381, Cl. 257-48.000.

Ohta, Mutsumi, to NEC Corporation. Lossless transform coding system for digital signals. 5,703,799, Cl. 364-725.000.

Ohta, Seiya; Kaneda, Kitahiro; Takei, Hirofumi; and Tanaka, Taeko, to Canon Kabushiki Kaisha. Image pickup apparatus for moving image photographing or for still image photographing. 5,703,638, Cl. 348-220.000.

Ohta, Shinichi, to Yamaha Corporation. Electronic musical apparatus for synthesizing vocal sounds using format sound synthesis techniques. 5,703,311, Cl. 84-622.000.

Ohta, Tatsuya; and Moritani, Masami, to Fuji Jukogyo Kabushiki Kaisha. Method and apparatus for forming a hole for using cooling air in hole forming process. 5,703,340, Cl. 219-121.480.

Ohtani, Yasuo; Kataho, Takuo; Satoh, Makoto; Tanaka, Tsutomu; Nose, Yoshimasa; Kobayashi, Kazuyoshi; Uchikawa, Tetsuhide; and Hamahata, Toshihiro, to TDK Corporation. Calcination furnace. 5,703,901, Cl. 373-109.000.

Ohtomo, Fumio; Hayashi, Kunihiro; Kodaira, Jun-ichi; Nishizawa, Hiroyuki; and Yoshino, Kenichiro, to Kabushiki Kaisha Topcon. Object reflector detecting apparatus. 5,703,718, Cl. 359-494.000.

Ohuchi, Atsushi: *See—*

Ichinose, Susumu; Nishizawa, Yoshinori; Ohuchi, Atsushi; Kidena, Hideshi; and Hotta, Mitsuyuki, 5,702,691, Cl. 424-70.100.

Oishi, Kazumasa; Akasaka, Nobuhiro; Kakuta, Tatsuya; and Matsuda, Yasuo, to Sumitomo Electric Industries, Ltd. Coated optical fiber and fabrication process therefor. 5,703,988, Cl. 385-128.000.

Ojanpera, Tero; and Keskitalo, Ilkka, to Nokia Telecommunications Oy; and Nokia Mobile Phones Ltd. Method and apparatus for synchronizing subscriber equipment with base stations in a CDMA radio network. 5,703,873, Cl. 370-332.000.

Ojha, Jugnu J.: *See—*

MacElwee, Thomas; Kovacic, Stephen J.; and Ojha, Jugnu J., 5,703,980, Cl. 385-49.000.

Ojima, Fumio: *See—*

Mashimo, Kiyokazu; Ojima, Fumio; Ishii, Toru; and Nukada, Katsumi, 5,702,856, Cl. 430-96.000.

Oka, Motohiro: *See—*

Fujii, Hideaki; Ishiga, Hiroshi; Harayama, Masatoshi; and Oka, Motohiro, 5,703,433, Cl. 313-484.000.

Okabe, Seiji: *See—*

Yamada, Hiromu; and Okabe, Seiji, 5,703,326, Cl. 174-50.520.

Okada, Hideaki: *See—*

Ohashi, Ryota; Okada, Hideaki; and Nagai, Toshio, 5,701,739, Cl. 60-453.000.

Okada, Kazuhiro: *See—*

Sugiura, Masahisa; Okada, Kazuhiro; and Nagata, Sadao, 5,702,749, Cl. 426-638.000.

Okamoto, Hideyuki; Miyashita, Hiroichi; and Nakayama, Ryoichi, to Sumitomo Metal Mining Co., Ltd. Flotation method for non-ferrous metal variable ores. 5,702,591, Cl. 209-167.000.

Okamoto, Masaaki, to Fujitsu Limited. Charge pump circuit, PLL circuit with charge pump circuit, and semiconductor integrated circuit with charge pump circuit. 5,703,511, Cl. 327-157.000.

Okamoto, Masahiko: *See—*

Murata, Oritoshi; and Okamoto, Masahiko, 5,702,813, Cl. 428-332.000.

Okamura, Takumi: *See—*

Tsuru, Yasutaka; Okamura, Takumi; Kimura, Shoji; Yamamoto, Yuji; Murata, Toshinori; Katsumata, Kenji; Akiyama, Moriyoshi; and Eda, Takanori, 5,703,658, Cl. 348-554.000.

Okazaki, Hiroyuki: *See—*

Uchida, Masaki; Naito, Takaki; Shirai, Hiroshi; Iino, Koichi; and Okazaki, Hiroyuki, 5,702,269, Cl. 439-496.000.

Okazaki, Takeshi: *See—*

Higuma, Masahiko; Ikeda, Masami; Asai, Naohito; Abe, Tsutomu; Kashino, Toshio; Ohshima, Noriyoshi; Okazaki, Takeshi; Sugimoto, Hitoshi; and Tajima, Hiroki, 5,701,995, Cl. 206-205.000.

O'Keeffe, Denis: *See—*

Bidiville, Marc; Raeber, Eric; Arreguit, Javier; Buczek, Harthmuth; Van Shaik, Floris A.; Bauduin, François; and O'Keeffe, Denis, 5,703,356, Cl. 250-221.000.

Oki Electric Industry Co., Ltd.: *See—*

Mizutani, Minoru; Hayashi, Kuniharu; and Aida, Koji, 5,702,189, Cl. 400-328.000.

Nakamura, Seizo, 5,703,914, Cl. 375-355.000.

Yamamoto, Syouhei, 5,703,518, Cl. 327-354.000.

Okita, Tsutomu: *See—*

Murayama, Yuichiro; Satake, Masaki; Hashimoto, Hiroshi; and Okita, Tsutomu, 5,702,821, Cl. 428-425.900.

Oko Electric Industry Co., Ltd.: *See—*

Takashima, Sumihiro, 5,703,516, Cl. 327-307.000.

Okonski, Frank, to Best Cutting Die Company. Waste repellent die structure. 5,701,789, Cl. 83-13.000.

Okuma, Kiyoshi; Saegusa, Koichiro; and Shiono, Ryozo, to Minnesota Mining and Manufacturing Company. Method and apparatus for producing a laminated viscoelastic product. 5,702,556, Cl. 156-261.000.

Okumura, Katsuya: *See—*

Mikata, Yuuichi; Ishihara, Katsunori; and Okumura, Katsuya, 5,702,529, Cl. 118-722.000.

Okumura, Maoji: *See—*

Izawa, Yosuke; Tani, Masahiro; Okumura, Maoji; Nio, Yutaka; and Sato, Toshichika, 5,703,653, Cl. 348-445.000.

Okuyama, Toshio: *See—*

Takahashi, Shin; Ohashi, Yoshiharu; Ando, Yushi; and Okuyama, Toshio, 5,703,267, Cl. 558-451.000.

Olaiz, James, to Junior Products Inc. Stroller suspended utility belt. 5,702,039, Cl. 224-409.000.

Olin Corporation: *See—*

Rothgery, Eugene F.; and Seefried, Carl G., Jr., 5,703,323, Cl. 149-[illegible]

Oliver, Joseph J.; Young, Christopher L.; and Bednar, Richard D., to Ransomes America Corporation. Retrofit hydraulic fluid leak detection system. 5,703,569, Cl. 340-605.000.

Oloff, Lawrence D.: *See—*

DeSpain, Julianne M.; Oloff, Lawrence D.; and Rogers, Theodore W., 5,702,354, Cl. 601-27.000.

Olsen, Barry E.: *See—*

Bland, Christopher J.; Gazda, Jan; and Olsen, Barry E., 5,703,537, Cl. 331-1.00A.

Olson, Christopher Peter: *See—*

Glaug, Frank Steven; Brunner, Michael Scott; Cochrane, Faith Eileen; Durrance, Debra Hartley; Olson, Christopher Peter; Schleinz, Robert Joseph; and Thiessen, Richard Harry, 5,702,376, Cl. 604-361.000.

Olympus Optical Co., Ltd.: *See—*

Aoki, Norihiko, 5,703,723, Cl. 359-654.000.

Kaji, Kunihide, 5,702,407, Cl. 606-139.000.

Kimura, Shuichi; and Tsukagoshi, Tsuyoshi, 5,702,352, Cl. 600-201.000.

Kojima, Jitsunari, 5,703,714, Cl. 359-368.000.

Takahashi, Koichi; and Iba, Yoichi, 5,703,605, Cl. 345-8.000.

Umeyama, Koichi; Ogasawara, Tadahiko; Yoshino, Kenji; Watanabe, Katsushi; and Koda, Koji, 5,702,384, Cl. 604-892.100.

Yabe, Hisao; Iida, Yoshihiro; Suzuki, Akira; Ito, Hideo; Tashiro, Yoshio; Yamazaki, Minoru; Tamada, Osamu; Nakazawa, Masaaki; and Yamaya, Koji, 5,702,347, Cl. 600-121.000.

Omar, Basil Arthur: *See—*

Ezra, David; Woodgate, Graham John; Harrold, Jonathan; and Omar, Basil Arthur, 5,703,717, Cl. 359-462.000.

Omon, Effiong A.: *See—*

Makwana, Jitendra J.; Monteilh, Darryl F.; and Omon, Effiong A., 5,703,808, Cl. 365-185.270.

Omote, Masanori: *See—*

Watari, Masao; Ishii, Kazuo; Kato, Yasuhiko; Ogawa, Hiroaki; Omote, Masanori; Watanabe, Kazuo; and Minamino, Katsuki, 5,704,013, Cl. 395-23.000.

Omura, Kazuhiko; Iguchi, Masayoshi; Yoshiyama, Masatoshi; and Nishikawa, Hiroshi, to Brother Kogyo Kabushiki Kaisha; and Xing Inc. Video reproduction device. 5,703,996, Cl. 386-68.000.

O'Neal, Alan D.; Stone, Michael D.; and Coles, Carl R., to Tuthill Corporation. Rotary positive displacement blower having a diverging outlet part. 5,702,240, Cl. 418-9.000.
Onimaru, Sadahisa: *See*—
Tsunokawa, Masaru; Ozaki, Yukikatsu; Onimaru, Sadahisa; and Suzuki, Takahisa, 5,701,752, Cl. 62-183.000.
Onizuka, Takahiro; and Saka, Yuuji, to Sumitomo Wiring Systems, Ltd. Electric junction box and electric current distribution system. 5,703,746, Cl. 361-106.000.
Ono Pharmaceutical Co., Ltd.: *See*—
Hamanaka, Nobuyuki; Takahashi, Kanji; and Tokumoto, Hidekado, 5,703,099, Cl. 514-340.000.
Ono, Seiji: *See*—
Kaku, Nobuyuki; Ono, Seiji; Maehara, Yoshimi; and Inoue, Mikihisa, 5,702,062, Cl. 242-338.400.
Ono, Shuji, to Fuji Photo Film Co., Ltd. Optical operation element, optical data processing circuit and photoelectric operation element. 5,704,015, Cl. 395-25.000.
Onodaka, Koji: *See*—
Kishino, Takao; Onodaka, Koji; Tanaka, Mitsuru; and Yamaguchi, Satoshi, 5,703,610, Cl. 345-74.000.
Kishino, Takao; Yamaura, Tatsuo; Onodaka, Koji; and Itoh, Shigeo, 5,703,611, Cl. 345-74.000.
Onodera, Minoru: *See*—
Jester, Randy Douglas; Penoyer, John Arthur; Roth, Douglas Duane; Frank, Detlef; Onodera, Minoru; Tsudaka, Takeichi; Sato, Toshiaki; and Moritani, Tohei, 5,703,202, Cl. 528-481.000.
Onofrio, Daniel. Fastener. 5,702,218, Cl. 411-552.000.
Onori, Roberto: *See*—
Guzzini, Virgilio; Montangero, Enrico; and Onori, Roberto, 5,702,353, Cl. 601-2.000.
Oono, Kiyoo, to Mitsubishi Jukogyo Kabushiki Kaisha. Method of brazing a honeycomb. 5,702,050, Cl. 228-212.000.
Oozono, Kazuya: *See*—
Kinoshita, Naoki; and Oozono, Kazuya, 5,703,465, Cl. 320-22.000.
OPE, Inc.: *See*—
Quenan, Gary O.; and Hull, Tommy Lee, 5,702,206, Cl. 405-227.000.
Opitz, Robert John; and Zawadzki, Silvia, to Eastman Kodak Company. Weakly alkaline ascorbic acid developing composition, processing kit and method using same. 5,702,875, Cl. 430-492.000.
Optex Co., Ltd.: *See*—
Tomooka, Hiroyuki; and Sugimoto, Tadashi, 5,703,368, Cl. 250-349.000.
Optonol Ltd: *See*—
Richter, Jacob; Pinchasik, Gregory; and Yaron, Ira, 5,702,414, Cl. 606-166.000.
Order, Stanley E. Ecological burial method and apparatus. 5,701,642, Cl. 27-4.000.
Oren, Jakob: *See*—
Gelmont, Mark; Bercovici, Joseph; and Oren, Jakob, 5,703,274, Cl. 562-475.000.
Orienta Yeast Co., Ltd.: *See*—
Tanaka, Toshio, 5,702,921, Cl. 435-69.600.
Orihara, Katsuhisa: *See*—
Fujimoto, Masahiro; and Orihara, Katsuhisa, 5,703,573, Cl. 340-825.540.
Orihara, Motoi: *See*—
Mori, Yasutomo; Orihara, Motoi; Hada, Kunihiko; and Miyamoto, Shuji, 5,703,006, Cl. 503-207.000.
Orikasa, Tsuyoshi: *See*—
Arashima, Teruo; Kimura, Makiko; Kashino, Toshio; Sugitani, Hiroshi; Hattori, Yoshifumi; Ikeda, Masami; Saito, Akio; Masuda, Kazuaki; Saito, Akio; and Orikasa, Tsuyoshi, 5,703,632, Cl. 347-47.000.
Orlando, Jacqueline. One cup post-convalescent brassiere. 5,702,285, Cl. 450-1.000.
Orr, Michael L., to J. R. Simplot Co. Method of use of a coating compound in vessels, and a coating compound for vessels. 5,702,768, Cl. 427-421.000.
Ortmann, Walter Joseph: *See*—
Richardson, Alan David; Early, Paul Timothy; Brown, Larry Thomas; Ortmann, Walter Joseph; and Bos, Edward Albert, 5,701,869, Cl. 123-497.000.
Osada, Takayuki; Tsuda, Fumishiro; Saito, Norio; Bara, Takeji; Wagatsuma, Yoshio; and Moriya, Hitoshi, to Tokin Corporation. Noise absorbing device. 5,703,557, Cl. 336-92.000.
Osakada, Takeya: *See*—
Yamamoto, Shuko; Osakada, Takeya; and Tsuge, Iwao, 5,703,561, Cl. 338-53.000.
Osawa, Tokuya, to Mitsubishi Denki Kabushiki Kaisha. Test circuit. 5,703,818, Cl. 365-201.000.
Osawa, Yukio; Shimamoto, Katsuhiko; Ishigaki, Shinichi; Araki, Hitoshi; Nakata, Yukio; and Fujimaru, Atsushi, to Aida Chemical Industries Co., Ltd. Clayish composition for molding shaped article of noble metal and method for production of sintered article of noble metal. 5,702,501, Cl. 75-255.000.
Osborn, Thomas W., III; Sugahara, Kazuko; and Hines, Letha M., to Procter & Gamble Company, The. Extensible absorbent articles. 5,702,382, Cl. 604-385.200.
Osman, Kerwin Craig: *See*—
Snider, Chris Ralph; and Osman, Kerwin Craig, 5,703,625, Cl. 345-168.000.
Osram Sylvania Inc.: *See*—
Reddy, Vaddi Butchi; and Reilly, Kenneth T., 5,702,643, Cl. 252-301.650.
Sidwell, Steven C.; English, George J.; Garrison, Robert L.; and Johnson, Ralph J., 5,702,179, Cl. 362-255.000.
Osteonics Corp.: *See*—
Capello, William N.; and Dong, Nicholas N. G., 5,702,477, Cl. 623-22.000.
Osteotech, Inc.: *See*—
Shimp, Lawrence A.; and Renkema, Peter J., 5,702,677, Cl. 423-308.000.
Otis Elevator Company: *See*—
Tracey, Michael J., 5,701,973, Cl. 187-316.000.
Otobe, Hiroshi: *See*—
Imanari, Hiroyuki; and Otobe, Hiroshi, 5,701,774, Cl. 72-8.600.
Otoguro, Yoshishige, to LG Electronics Inc. Monaural signal judgement circuit. 5,703,953, Cl. 381-12.000.
Otologics LLC.: *See*—
Metzler, Michael Eugene; and Saller, Louis Richard, 5,702,342, Cl. 600-25.000.
O'Toole, Brendan: *See*—
Arai, Youichi; O'Toole, Brendan; Saigo, Tsutomu; Shimoyama, Kenichi; Kumagai, Ryo; and Takada, Yoshihide, 5,703,486, Cl. 324-427.000.
Otsuka Pharmaceutical Co., Ltd.: *See*—
Nakai, Satoru; Kaneta, Mayumi; Kikumoto, Yoshikazu; Hong, Yeong-Man; Kawai, Kazuyoshi; Takegata, Setsuko; Ishii, Kiyoshi; Yanagihara, Yasuo; and Hirai, Yoshikatsu, 5,702,698, Cl. 424-85.200.
Ottersbach, Walter: *See*—
Paramonov, Vladimir A.; Tychinin, Anatolij I.; Moroz, Anatolij I.; Birger, Boris L.; Frommann, Klaus; Haupt, Werner; and Ottersbach, Walter, 5,702,528, Cl. 118-623.000.
Otto, Mary Rita, to Lucent Technologies, Inc. Completion of calls to a preferred agent in an automatic call distributor. 5,703,943, Cl. 379-265.000.
Ottow, Eckhard; Schwede, Wolfgang; Halfbrodt, Wolfgang; Fritzemeier, Karl-Heinrich; and Krattenmacher, Rolf, to Schering Aktiengesellschaft. Progestationally active 19,11-bridged 4-estrenes. 5,703,066, Cl. 514-173.000.
Ouchi, Yasuhide: *See*—
Kirino, Fumiyoshi; Toda, Tsuyoshi; Ide, Horishi; Sugiyama, Hisataka; Saito, Atsushi; Tsuchinaga, Hiroyuki; Maeda, Takeshi; Kugiya, Fumio; Kaku, Toshimitsu; Mita, Seiichi; Shigematsu, Kazuo; and Ouchi, Yasuhide, 5,703,855, Cl. 369-54.000.
Ouellet, Debra: *See*—
Ouellet, Gilles; and Ouellet, Debra, 5,702,009, Cl. 211-74.000.
Ouellet, Gilles; and Ouellet, Debra. Bottle holder. 5,702,009, Cl. 211-74.000.
Ouellette, David A., to United Technologies Corporation. Blade opening filler. 5,702,233, Cl. 416-245.00R.
Oumi, Hayato: *See*—
Sakai, Kouichi; Oumi, Hayato; and Suzuki, Hiroshi, 5,702,315, Cl. 474-94.000.
Owens-Corning Fiberglas Technology, Inc.: *See*—
Huang, Jianzhong, 5,702,498, Cl. 65-453.000.
Pellegrin, Michael T.; Gavin, Patrick M.; Ault, Patrick L.; Loftus, James E.; Haines, Randall M.; and Morris, Virgil, 5,702,658, Cl. 264-172.140.
Owens-Illinois Labels Inc.: *See*—
Marsh, Dennis R., 5,701,994, Cl. 206-203.000.
Owensby, Joseph E., to W. R. Grace & Co.-Conn. Simplified method of coding packages and coded packages produced by such method. 5,702,739, Cl. 426-87.000.
Owyang, Zachary E., to Eclipse Surgical Technologies, Inc. Optical fiber device and method for laser surgery procedures. 5,703,985, Cl. 385-117.000.
Oy, Orion-yhtymä : *See*—
Karjalainen, Arto Johannes; Söderyall, Maria-Liisa; Kalapudas, Arja Marketta; Pelkonen, Reino Olavi; Laine, Aire Maria; Lammintausta, Risto Arvo Sakari; and Salonen, Jarmo Sakari, 5,703,109, Cl. 514-383.000.
O'Young, Chi Lin; Shen, Yan-Fei; Dequzman, Roberto Nguyen; and Suib, Steven Lawrence, to Texaco Inc. Framework metal-substituted manganese oxide octahedral molecular sieve and process for its preparation. 5,702,674, Cl. 423-50.000.
Ozaki, Hideharu, to NEC Corporation. Scanning pass test circuit. 5,703,884, Cl. 371-22.300.
Ozaki, Masaaki: *See*—
Muramatsu, Masayoshi; and Ozaki, Masaaki, 5,703,665, Cl. 349-60.000.
Ozaki, Yoshihiro: *See*—
Ike, Tetsuji; Inoue, Takeshi; and Ozaki, Yoshihiro, 5,703,150, Cl. 524-125.000.
Ozaki, Yukikatsu: *See*—
Tsunokawa, Masaru; Ozaki, Yukikatsu; Onimaru, Sadahisa; and Suzuki, Takahisa, 5,701,752, Cl. 62-183.000.
Ozawa, Kazunori: *See*—
Itoh, Noriie; Kunihara, Mineo; Kushida, Hiroshi; McWhorter, William W.; Nomura, Syunji; Ozawa, Kazunori; Taniguchi, Mikio; and Tsuzuki, Kazuo, 5,703,071, Cl. 514-218.000.
Ozawa, Shigeyuki: *See*—
Nakase, Ryoichi; Ozawa, Shigeyuki; Fujimoto, Hiroaki; and Suzuki, Takehisa, 5,702,276, Cl. 440-89.000.
P. A. Hilton Limited: *See*—

Heikal, Morgan, 5,702,185, Cl. 374-29.000.
P.E.E.M. Förderanlagen Gesellschaft m.b.H.: *See*—
Neukam, Helmut, 5,701,719, Cl. 53-247.000.
PACCAR Inc.: *See*—
Shaw, Jeffery H., 5,702,078, Cl. 248-118.000.
Stephens, Donald L., 5,701,969, Cl. 180-300.000.
Pacesetter, Inc.: *See*—
Wickham, Peter John, 5,702,425, Cl. 607-9.000.
Padmanabhan, Gobi R., to LSI Logic Corporation. Method of making buried metallization structure. 5,702,957, Cl. 437-24.000.
Padovani, Roberto: *See*—
Ziv, Noam Abraham; and Padovani, Roberto, 5,703,902, Cl. 375-200.000.
Padula, Filippo D. Rotary press. 5,701,782, Cl. 72-452.400.
Page, Edward A.: *See*—
Sharkey, J. Brian; Doblar, Randy A.; Bothwell, Frank E.; Belt, Ronald A.; and Page, Edward A., 5,703,835, Cl. 367-124.000.
Pai, Damodar M.: *See*—
Schank, Richard L.; Renfer, Dale S.; Limburg, William W.; Kunzmann, Brendan W.; and Pai, Damodar M., 5,702,854, Cl. 430-59.000.
Paidassi, Serge; Ernoult, Jacques; Brun, Michel; Monge-Cadet, Pierre; Pauleau, Yves; and Farges, Guy, to Commissariat a l'Energie Atomique; Turbomeca; and L'Etat Francais represente par le Delegue general pour l'Armement. Multilayer material, anti-erosion and anti-abrasion coating incorporating said multilayer material. 5,702,829, Cl. 428-610.000.
Painter, Jeffrey Donald: *See*—
Offshack, Edward Robert; Painter, Jeffrey Donald; and Aquino, Melissa Dee, 5,703,034, Cl. 510-376.000.
Pajan, James L.: *See*—
Griffin, Michael F.; and Pajan, James L., 5,702,774, Cl. 427-598.000.
Pak, Kyoungsik. Composition, dosage unit, and method for treating stomach disorders. 5,703,127, Cl. 514-562.000.
Pakerisamy, Saragavani; and Tan, Wayne H., to Advanced Micro Devices, Inc. PLLC/LCC tube. 5,702,005, Cl. 206-718.000.
Pall Corporation: *See*—
Degen, Peter J.; and Foss, Warren M., 5,702,616, Cl. 210-767.000.
Palmero, Albert: *See*—
Sterling, Anthony P.; and Palmero, Albert, 5,702,420, Cl. 606-205.000.
Palmers, Bruce; and Thompson, Linda. Method of producing altar bread. 5,702,744, Cl. 426-242.000.
Palmier, Jean-François: *See*—
Le Person, Henri; Minot, Christophe; and Palmier, Jean-François, 5,703,379, Cl. 257-21.000.
Palumbo, Gino. Thermomechanical processing of metallic materials. 5,702,543, Cl. 148-592.000.
Pan, ShaoWei; and Wang, Shay-Ping Thomas, to Motorola, Inc. Logarithm/inverse-logarithm converter utilizing second-order term and method of using same. 5,703,801, Cl. 364-748.500.
Panasonic Technologies, Inc.: *See*—
Lopresti, Daniel P.; Korth, Henry F.; Sandberg, Jonathan S.; and Lipton, Richard J., 5,703,972, Cl. 382-310.000.
Pandolfo, Salvatore Mario, to Instituto Analitico Toscanese S.r.l. Variable resonance descaling decalcifier device connected to a forced sequential rephasing transformer. 5,702,600, Cl. 210-222.000.
Panescu, Dorin: *See*—
Stern, Roger A.; Panescu, Dorin; and Swanson, David K., 5,702,386, Cl. 606-34.000.
Pankey, Brent W.: *See*—
Salmon, Michael E.; and Pankey, Brent W., 5,703,612, Cl. 345-75.000.
Pankove, Jacques Isaac; Moddel, Garret Robin; and Douglas, Kenneth, to University of Colorado, The Regents of the. Silicon quantum dot laser. 5,703,896, Cl. 372-50.000.
Pankow, Mark L.: *See*—
Makhlouf, Samar; Pankow, Mark L.; Anderson, Byron E.; and Bean, Pamela, 5,702,904, Cl. 435-7.100.
Panziera, Edoardo: *See*—
Sun, Andy Kwan-Leung; Chow, Bruce H. B.; and Panziera, Edoardo, 5,702,041, Cl. 224-539.000.
Papageorge, Christopher: *See*—
Fondas, Evangelos; and Papageorge, Christopher, 5,701,884, Cl. 128-201.110.
Papastavros, Theodore G.: *See*—
Goldstein, Arthur L.; Papastavros, Theodore G.; and Richard, Emery J., 5,702,582, Cl. 204-632.000.
Papp, Gyula: *See*—
Eszenyi, Tibor; Sebők, Péter; Frank, László; Papp, Gyula; Timár, Tibor; and Bartik, Tamás, 5,703,113, Cl. 514-422.000.
Pappas, Michael J.; and Buechel, Frederick F., to Biomedical Engineering Trust I. Prosthesis fixturing device. 5,702,461, Cl. 623-20.000.
Pappas, Michael J.; and Buechel, Frederick F., to Biomedical Engineering Trust I. Rotational and translational bearing combination in biological joint replacement. 5,702,466, Cl. 623-20.000.
Pappas, Michael J.: *See*—
Buechel, Frederick F.; and Pappas, Michael J., 5,702,448, Cl. 623-16.000.
Paquette, Bernard Maurice: *See*—
Phelps, Jack LeRoy; and Paquette, Bernard Maurice, 5,701,748, Cl. 62-91.000.
Para-Chem Southern, Inc.: *See*—
Ungefug, Gary Allan; Wicker, Benjamin Marvin; Bible, James Richard; and Worley, Billy Thomas, Jr., 5,703,176, Cl. 525-369.000.
Parab, Prakash, to Bristol-Myers Squibb Company. Method for enhancing the rate of skin permeation of lactic acid through use of the L-enantiomer. 5,702,711, Cl. 424-401.000.
Paramonov, Vladimir A.; Tychinin, Anatolij I.; Moroz, Anatolij I.; Birger, Boris L.; Frommann, Klaus; Haupt, Werner; and Ottersbach, Walter, to Mannesmann Aktiengesellschaft; I.P. Bardin Central Research Institute of Iron and Steel Industry; and SKB MGD, Institute of Physics. Process for coating the surface of elongated materials. 5,702,528, Cl. 118-623.000.
Paraschac, Joseph F.: *See*—
Wales, Kenneth S.; Paraschac, Joseph F.; and Stefanchik, David, 5,702,408, Cl. 606-139.000.
Parham, William W.: *See*—
Krutak, James J.; Cushman, Michael R.; Coates, Clarence A.; Parham, William W.; Weaver, Max A.; and Patonay, Gabor, 5,703,229, Cl. 540-140.000.
Park, Chul-Sun: *See*—
Yoon, Hyung-Sup; Lee, Jin-Hee; Park, Chul-Sun; and Pyun, Kwang-Eui, 5,702,975, Cl. 437-61.000.
Park, Churoo; Jang, Hyun-Soon; Kim, Chull-Soo; Kim, Myung-Ho; Lee, Seung-Hun; Lee, Si-Yeol; Lee, Ho-Cheol; Kim, Tae-Jin; and Choi, Yun-Ho. Semiconductor memory. 5,703,828, Cl. 365-230.030.
Park, Dong-Gyun. Frying pan having cooking oil supply device. 5,701,807, Cl. 99-422.000.
Park, Dong-suk, to Korea Spicer Corp. Synchronizer for automobile transmission. 5,701,984, Cl. 192-53.350.
Park, Jae-Hong, to Samsung Electronics Co., Ltd. Methods of forming insulated gate bipolar transistors having built-in freewheeling diodes and transistors formed thereby. 5,702,961, Cl. 437-40.000.
Park, James S. Sunglasses including quick release lens retainer #5. 5,703,669, Cl. 351-86.000.
Park, John Y.; Peng, Lin; and Dziabo, Anthony J., to Allergan. Compositions and methods for disinfecting a contact lens and detecting the presence of an oxidative disinfectant. 5,703,024, Cl. 510-100.000.
Park, Kwon Chul: *See*—
Jung, Hee Young; Lee, Bhum Cheol; and Park, Kwon Chul, 5,703,882, Cl. 370-474.000.
Park, Myung-Hyun; Koo, Myung-Kwon; and Um, Min-Sik, to Daewoo Electronics, Co., Ltd. Method for manufacturing a thin film actuated mirror having a stable elastic member. 5,702,569, Cl. 156-662.100.
Park Plus Corporation: *See*—
Rosen, Arnold M., 5,702,222, Cl. 414-228.000.
Park, Sung Jun: *See*—
Kim, Su Ung; Kim, Dong Yeon; Chung, Gi ju; Hong, Sung Kol; Park, Sung Jun; Nam, Sang Hoon; and Lee, Yong Suk, 5,703,097, Cl. 514-338.000.
Park, Sung Oun: *See*—
Tark, Kyoung Sig; and Park, Sung Oun, 5,703,336, Cl. 181-179.000.
Park, Young Seung, to LG Semicon Co., LTD. Apparatus and method for testing a program memory for a one-chip microcomputer. 5,704,033, Cl. 395-183.000.
Parker, Norman Marion, IV, to Milliken Research Corporation. Knit cellular cattle mattress fabric. 5,701,846, Cl. 119-526.000.
Parker, Richard: *See*—
Evans, Nigel; Hewlett, William E.; and Parker, Richard, 5,702,082, Cl. 248-230.100.
Parr, Michael I.: *See*—
Kay, Stanley E.; Kaul, Pradeep; Parr, Michael I.; Avis, Graham; Corrigan, John E., III; Wendling, Daniel; and Mehta, Ashok D., 5,703,881, Cl. 370-468.000.
Parrish & Heimbecker, Limited: *See*—
Nickel, Gary B.; and Berger, Bernhard, 5,703,226, Cl. 536-107.000.
Pasero, Eros: *See*—
Marotta, Giulio; and Pasero, Eros, 5,704,014, Cl. 395-24.000.
Pasik, Gregory E.: *See*—
Wood, Robert J.; Pileski, Michael J.; and Pasik, Gregory E., 5,702,345, Cl. 600-109.000.
Pasque, Michael K.: *See*—
Larson, Carl O., Jr.; Smith, James S.; Chapman, John H.; Slimon, Scot A.; John, Trahan D.; Robert, J. Brozek; Franco, Alberto; McGarvey, John J.; Rosen, Marvin E.; and Pasque, Michael K., 5,702,430, Cl. 607-1.000.
Pasternak, Gerald S., to Dynaflair Corporation. Adjustable hanging support mechanism for folding panel assembly enclosure. 5,701,941, Cl. 160-199.000.
Paterick-Smith, Garril J.; and Gerwing, David H., to Hovey Industries, Ltd. Railway switch heating apparatus. 5,702,074, Cl. 246-428.000.
Patino, Joseph, to Motorola, Inc. Apparatus for expanding battery recognition in a battery charging system. 5,703,467, Cl. 320-106.000.
Patonay, Gabor: *See*—
Krutak, James J.; Cushman, Michael R.; Coates, Clarence A.; Parham, William W.; Weaver, Max A.; and Patonay, Gabor, 5,703,229, Cl. 540-140.000.
Patterson, Donald J.: *See*—
Fritz, Gregory G.; and Patterson, Donald J., 5,702,007, Cl. 211-17.000.
Pauleau, Yves: *See*—
Paidassi, Serge; Ernoult, Jacques; Brun, Michel; Monge-Cadet, Pierre; Pauleau, Yves; and Farges, Guy, 5,702,829, Cl. 428-610.000.
Pavia, Andre A.; Pucci, Bernard; Riess, Jean G.; and Zarif, Leila, to Alliance Pharmaceutical Corp. Amphiphilic fluorine derivatives with telomeric structures. 5,703,126, Cl. 514-562.000.
Pavia, Michael R.: *See*—

DeWitt, Sheila H. H.; Kell, Michael; Pavia, Michael R.; Kiely, John S.; Schroeder, Mel C.; Stankovic, Charles J.; and Ware, Steven, 5,702,672, Cl. 422-131.000.
Pavur, Carol P.; Harper, Dennis; Bonnell, Steven W.; Norkus, James F.; Hartery, William F.; and Galloway, Lawrence W., to Chrysler Corporation. Universal snap-in metal plug. 5,702,133, Cl. 292-80.000.
Pawar, Chandra S.: *See—*
Wu, Gary C.; Pawar, Chandra S.; Leibowitz, Steven H.; Pullin, Edward J.; Hazzard, Michael J.; and Duggan, Joseph C., 5,704,052, Cl. 195-380.000.
Pawlak, Andrzej Marian; and Leung, Chi Hung, to General Motors Corporation. Magnetic latching relay. 5,703,550, Cl. 335-78.000.
Peach, Walter J., Jr., to Zeftek, Inc. Gap closing device for closing side wall gaps in auto rack cars. 5,701,825, Cl. 105-355.000.
Peacock, Ivan P., to Renegade Action Sports, Inc. Harness carrier. 5,702,042, Cl. 224-662.000.
Pearson, Derek P. A.: *See—*
Miller, Joseph; Pearson, Derek P. A.; and Pitcher, Philip G., 5,702,830, Cl. 428-611.000.
Pearson, Thomas C., to United States of America, Agriculture. Machine vision apparatus and method for sorting objects. 5,703,784, Cl. 364-478.110.
Pechonis, Daniel W.: *See—*
Yishay, Oded; LaViolette, William P.; and Pechonis, Daniel W., 5,704,039, Cl. 395-186.000.
Peck, James V.; Minaskanian, Gevork; and Sleevi, Mark C., to Durham Pharmaceuticals LLC. Cyclic amides and derivatives thereof. 5,703,104, Cl. 514-369.000.
Peck, Jan: *See—*
Tarter, Fred B.; Greene, Jeffrey M.; De Fazio, Thomas J.; Peck, Jan; Wylie, L. Stephen; Magnotte, Mark M.; Hall, Del; and Tarter, Scott A., 5,704,044, Cl. 395-204.000.
Peckerar, Martin C.; and Marrian, Christie, to United States of America, Navy. Alignment fiducial for improving patterning placement accuracy in e-beam masks for x-ray lithography. 5,703,373, Cl. 250-491.100.
Pedersen, Curtis Thomas: *See—*
Buchhop, Thomas Robert; D'Alleva, Randall; Darnell, Ronald Keith; Little, Jack Ryan; and Pedersen, Curtis Thomas, 5,703,777, Cl. 364-431.062.
Pedersen, Henrik: *See—*
Perregaard, Jens Kristian; Moltzen, Ejner Knud; Andersen, Kim; Pedersen, Henrik; Bøgesø, Klaus Peter; Pernet, Andre; Bopp, Barbara; Mulford, Darcy; and Sakamoto, Kiyoshi, 5,703,087, Cl. 514-278.000.
Pedersen, Jørgen Wenngreen, to Koninklijke PTT Nederland N.V. Integrated optical mode converter. 5,703,977, Cl. 385-28.000.
Pedraza, Anthony J.: *See—*
Lowndes, Douglas H.; Pedraza, Anthony J.; DeSilva, Melvin J.; and Kumar, Rajagopalan A., 5,703,341, Cl. 219-121.660.
Pedrazzani, Janet Renee: *See—*
DiGiovanni, David John; Judkins, Justin Boyd; Pedrazzani, Janet Renee; Vengsarkar, Ashish Madhukar; and Walker, Kenneth Lee, 5,703,978, Cl. 385-37.000.
Pegg, Neil Anthony: *See—*
Armour, Duncan Robert; Evans, Brian; Middlemiss, David; Naylor, Alan; Pegg, Neil Anthony; Vinader, Maria Victoria; Giblin, Gerard Martin Paul; Hubbard, Tania; Hann, Michael Menteith; Lewell, Xiao-Qing; and Watson, Stephen Paul, 5,703,240, Cl. 546-210.000.
Pehrsson, Pehr E.; and Marchywka, Michael L., to United States of America, Navy. Polishing diamond surface. 5,702,586, Cl. 205-640.000.
Pelaez, Fernando: *See—*
Jayasuriya, Hiranthi; Lingham, Russell B.; Pelaez, Fernando; Sanchez, Manuel; Silverman, Keith C.; Singh, Sheo Bux; and Zink, Deborah L., 5,703,067, Cl. 514-179.000.
Morris, Sandra A.; Curotto, James E.; Bills, Gerald F.; Dreikorn, Sarah J.; Streicher, Stanley L.; Zink, Deborah L.; Thompson, John R.; Basilio, Angela; Pelaez, Fernando; Diez, Maria Teresa; and Vicente, Francisca, 5,702,929, Cl. 435-118.000.
Pelkonen, Reino Olavi: *See—*
Karjalainen, Arto Johannes; Södervall, Maria-Liisa; Kalapudas, Arja Marketta; Pelkonen, Reino Olavi; Laine, Aire Maria; Lammintausta, Risto Arvo Sakari; and Salonen, Jarmo Sakari, 5,703,109, Cl. 514-[illegible].
Pella Corporation: *See—*
Ver Meer, Jim, 5,701,780, Cl. 72-379.200.
Pellegrin, Michael T.; Gavin, Patrick M.; Ault, Patrick L.; Loftus, James E.; Haines, Randall M.; and Morris, Virgil, to Owens-Corning Fiberglas Technology, Inc. Bicomponent polymer fibers made by rotary process. 5,702,658, Cl. 264-172.140.
Pellerite, Mark J.; Rich, Larry D.; and Sanders, James F., to Minnesota Mining and Manufacturing Company. Masonry treatment composition. 5,702,509, Cl. 106-2.000.
Pelzer, Ralf; Surburg, Horst; and Hopp, Rudolf, to Haarmann & Reimer GmbH. Method for causing a physiological cooling effect to the skin or mucosa involving the application of carbonic acid esters. 5,703,123, Cl. 514-512.000.
Peng, Chi-Kang: *See—*
Liao, Ching-Wen; Kao, Chin-Chuan; Peng, Chi-Kang; and Lin, Tsun-Ching, 5,702,624, Cl. 219-497.000.
Peng, Lin: *See—*
Park, John Y.; Peng, Lin; and Dziabo, Anthony J., 5,703,024, Cl. 510-100.000.
Pengwu, Chung-Mou: *See—*
Li, Tze Fen; Pengwu, Chung-Mou; Chen, Cheng-Der; and Sun, Chung-Yu, 5,704,004, Cl. 395-2.520.
Pennica, Diane: *See—*
Goeddel, David V.; Kohr, William J.; Pennica, Diane; and Vehar, Gordon A., 5,702,938, Cl. 435-226.000.
Penoyer, John Arthur: *See—*
Jester, Randy Douglas; Penoyer, John Arthur; Roth, Douglas Duane; Frank, Detlef; Onodera, Minoru; Tsudaka, Takeichi; Sato, Toshiaki; and Moritani, Tohei, 5,703,202, Cl. 528-481.000.
People You Need, Inc.: *See—*
Atkinson, Charles Michael, 5,701,694, Cl. 40-493.000.
Perez, Carl: *See—*
Kriegler, Michael; and Perez, Carl, 5,702,705, Cl. 424-145.100.
Perez, Gerardo: *See—*
Pinto, Ivan; Perez, Gerardo; and Bowersox, Clarence W., Jr., 5,703,301, Cl. 73-864.630.
Perham, Christine M. Non-gripping hand/foot resistance producing aquatic exercise apparatus and method of use. 5,702,331, Cl. 482-111.000.
Perini, Umberto; Martinelli, Paolo; Golinelli, Elena; Musazzi, Sergio; Trespidi, Franco; and Pintus, Nice, to Enel S.p.A. Optical granulometer for measuring the concentration of particulate present in a fluid at low standard concentrations. 5,703,690, Cl. 356-436.000.
Perkin-Elmer Corporation, The: *See—*
Grossman, Paul David; Fung, Steven; Menchen, Steven Michael; Woo, Sam Lee; and Winn-Deen, Emily Susan, 5,703,222, Cl. 536-24.300.
Perkin-Elmer LTD: *See—*
Hoult, Robert A., 5,703,681, Cl. 356-36.000.
Perkins, Christopher Mark; and Scheper, William Michael, to Procter & Gamble Company, The. Bleach compositions comprising cobalt catalysts. 5,703,030, Cl. 510-311.000.
Perl, John, II: *See—*
Evans, Scott; Perl, John, II; and Greff, Richard, 5,702,361, Cl. 604-53.000.
Pernet, Andre: *See—*
Perregaard, Jens Kristian; Moltzen, Ejner Knud; Andersen, Kim; Pedersen, Henrik; Bøgesø, Klaus Peter; Pernet, Andre; Bopp, Barbara; Mulford, Darcy; and Sakamoto, Kiyoshi, 5,703,087, Cl. 514-278.000.
Perregaard, Jens Kristian; Moltzen, Ejner Knud; Andersen, Kim; Pedersen, Henrik; Bøgesø, Klaus Peter; Pernet, Andre; Bopp, Barbara; Mulford, Darcy; and Sakamoto, Kiyoshi, to H. Lundbeck A/S. Phenyl indole compounds. 5,703,087, Cl. 514-278.000.
Perrier, Philippe: *See—*
Dieudonne, Marc; and Perrier, Philippe, 5,703,707, Cl. 359-128.000.
Perrin, Etienne; and Dony, Dominique, to Draftex Industries Limited. Gas spring. 5,702,091, Cl. 267-64.120.
Perry, Eric J.; and Frey, Thomas J. Baseball bat covers. 5,701,998, Cl. 206-315.100.
Pershing, John Arthur, Jr.: *See—*
Badovinatz, Peter Richard; Chandra, Tushar Deepak; Kirby, Orvalle Theodore; and Pershing, John Arthur, Jr., 5,704,032, Cl. 395-182.020.
Persons, Charles D.: *See—*
Jackson, Kenneth S.; Persons, Charles D.; Krebs, Robert D.; Price, Gregory G.; and Bales, Joel P., 5,702,388, Cl. 606-54.000.
Peter, Frederick H., Jr.; Bell, Eric; and Feldsein, Thomas M., to AKSYS, Ltd. Method of priming dialyzer. 5,702,606, Cl. 210-646.000.
Petercsak, Douglas W., to Teleflex, Incorporated. Turnbuckle-type adjustable link. 5,702,196, Cl. 403-46.000.
Peters, Jack Duane: *See—*
Finnicum, Douglas Scott; Finucane, Lawrence J.; Peters, Jack Duane; and Le, Son Minh, 5,702,524, Cl. 118-200.000.
Peters, John Antony, to Sulzer Innotec AG. Method for coating a substrate with a sliding abrasion-resistant layer utilizing graphite lubricant particles. 5,702,769, Cl. 427-451.000.
Peters, Matthias, to U.S. Philips Corporation. Circuit arrangement for amplitude-dependent attenuation of a television signal. 5,703,535, Cl. 330-278.000.
Petersen, Uwe; Ruther, Michael; Schenke, Thomas; Bremm, Klaus Dieter; and Endermann, Rainer, to Bayer Aktiengesellschaft. Quinolone- and naphthyridonecarboxylic acid derivatives. 5,703,094, Cl. 514-312.000.
Peterson, Mark A.: *See—*
Taylor, Phillip A.; Florczak, Jeffrey M.; Peterson, Mark A.; Iverson, Paul R.; Skorjanec, Joseph; and Lorentz, Robert D., 5,702,876, Cl. 430-496.000.
Peterson, William Edward: *See—*
Rettker, James Palmer; Peterson, William Edward; Chandler, Philip Bonn; and Lee, John Howard, 5,702,802, Cl. 428-192.000.
Peterson, William R.; and Stauffer, Craig M., to Complex Fluid Systems, Inc. Non-Aminic photoresist adhesion promoters for microelectronic applications. 5,702,767, Cl. 427-407.100.
Petrich, Loren I.: *See—*
Fu, Chi-Yung; and Petrich, Loren I., 5,703,965, Cl. 382-232.000.
Petrie, James E.: *See—*
Phillips, Trevor J.; and Petrie, James E., 5,701,931, Cl. 137-533.290.
Petrillo, Gino A. Electrical charge control apparatus and method for photovoltaic energy conversion systems. 5,703,468, Cl. 320-39.000.
Petroleum Geo-Services AS: *See—*
Børseth, Knut, 5,701,835, Cl. 114-56.000.
Petticrew, Richard W., to TBC Ventures, Inc. Method for molding dental restorations and related apparatus. 5,702,514, Cl. 106-35.000.
Petty, Randall Hughes: *See—*

Tsang, Chih-Hao Mark; Petty, Randall Hughes; Clausen, Glenn Allen; and Schrader, Charles Henry, 5,702,589, Cl. 208-67.000.
Peusens, Herbert: *See—*
Düllberg, Gerald; Peusens, Herbert; and Armbruster, Veit, 5,703,545, Cl. 333-202.000.
Pews, R. Garth: *See—*
Shankar, Ravi B.; Romer, Duane R.; and Pews, R. Garth, 5,703,102, Cl. 514-362.000.
Shankar, Ravi B.; Romer, Duane R.; and Pews, R. Garth, 5,703,114, Cl. 514-441.000.
Pezza, Mariner J., to Pezza, Mariner J. Triple-action, adjustable, rebound device. 5,701,685, Cl. 36-7.800.
Pfaff, Gerhard: *See—*
Vogt, Reiner; Bernhard, Klaus; and Pfaff, Gerhard, 5,702,518, Cl. 106-439.000.
Pfaifer, Patrick, to Groupe Lepine. Assembly device for elongate components of osteosynthesis, especially spinal, equipment. 5,702,393, Cl. 606-61.000.
Pfizer Inc.: *See—*
Cameron, Kimberly O.; Dasilva-Jardine, Paul A.; and Rosati, Robert L., 5,703,108, Cl. 514-382.000.
Deninno, Michael Paul; and McCarthy, Peter Andrew, 5,703,052, Cl. 514-26.000.
Dutton, Christopher J.; Gibson, Stephen P.; and Lee, Shih-Jen E., 5,702,924, Cl. 435-78.000.
Howard, Harry R., Jr., 5,703,065, Cl. 514-183.000.
Pharmacia & Upjohn Aktiebolag: *See—*
Bourboulou, Yves; Boucheteil, Micheline; Philippon, Céline; and Tronchet, Jean, 5,701,937, Cl. 141-244.000.
Pharmacia & Upjohn Company: *See—*
Gammill, Ronald B.; Judge, Thomas M.; and Morris, Joel, 5,703,075, Cl. 514-233.500.
Itoh, Noriie; Kunihara, Mineo; Kushida, Hiroshi; McWhorter, William W.; Nomura, Syunji; Ozawa, Kazunori; Taniguchi, Mikio; and Tsuzuki, Kazuo, 5,703,071, Cl. 514-218.000.
Lee, Byung H.; and Clothier, Michael F., 5,703,078, Cl. 514-250.000.
Pharmacy Fund, Inc., The: *See—*
Tarter, Fred B.; Greene, Jeffrey M.; De Fazio, Thomas J.; Peck, Jan; Wylie, L. Stephen; Magnotte, Mark M.; Hall, Del; and Tarter, Scott A., 5,704,044, Cl. 395-204.000.
Phelps, Jack LeRoy; and Paquette, Bernard Maurice. Evaporative cooler for air conditioning condensing unit. 5,701,748, Cl. 62-91.000.
Philippon, Céline: *See—*
Bourboulou, Yves; Boucheteil, Micheline; Philippon, Céline; and Tronchet, Jean, 5,701,937, Cl. 141-244.000.
Philips, Nicholas A.; and Keefe, Walter D., Jr., to Weyerhaeuser Company. Single piece food package. 5,702,054, Cl. 229-110.000.
Phillip, Bradley L.: *See—*
Shepodd, Timothy J.; and Phillip, Bradley L., 5,703,378, Cl. 252-182.120.
Phillips, Bradley R. Panel clamping and assembly rack. 5,702,561, Cl. 156-580.000.
Phillips, Michael John, to Kraft Foods Limited. Surface-ripened cheese product. 5,702,738, Cl. 426-36.000.
Phillips, Michael K.: *See—*
Ocken, Howard; Findlan, Shane J.; and Phillips, Michael K., 5,702,668, Cl. 420-57.000.
Phillips, Peter E.; and Desai, Vikram D., to Hughes Aircraft Company. Pulse forming network assembly. 5,703,891, Cl. 372-38.000.
Phillips, Robert B.: *See—*
Martin, Wallace Anthony; van der Meulen, Wybren; Menezes, Edgar V.; Renkema, Kornelis; Phillips, Robert B.; Lust, Victor; Wu, Jongliang; and Eshuis, Gerbrand, 5,702,735, Cl. 425-548.000.
Phillips, Stephen Allan, II; Myers, Jeffery Edward; and Elmore, Robert Bradley, to Modern Polymers, Inc. Product for protectively packaging appliances for storage and shipment. 5,701,999, Cl. 206-320.000.
Phillips, Timothy A.; and Lindberg, J. Eric, to Cherry Semiconductor Corporation. Programmable PWM output voltage independent of supply. 5,703,473, Cl. 323-282.000.
Phillips, Trevor J.; and Petrie, James E. Water relief valve for a drainage system. 5,701,931, Cl. 137-533.290.
Phoenix Aktiengesellschaft: *See—*
Friederich, Hans-Werner; and Kupczik, Günter, 5,702,132, Cl. 285-235.000.
Phong, Linh Ngo: *See—*
Shih, Ishiang; Phong, Linh Ngo; Qiu, Cindy Xing; and Laou, Philips, 5,703,357, Cl. 250-226.000.
Phusanti, Lawan: *See—*
Gogate, Uday S.; Agharkar, Shreeram N.; and Phusanti, Lawan, 5,703,111, Cl. 514-410.000.
Piccolino, LLC: *See—*
Malofsky, Adam G.; Malofsky, Bernard M.; and Glassberg, Paul R., 5,702,120, Cl. 280-642.000.
Pickle, David. Tire dolly. 5,702,226, Cl. 414-426.000.
Picksley, Steven Michael; and Lane, David Philip, to University of Dundee. Interruption of binding of MDM2 and p53 protein and therapeutic application thereof. 5,702,908, Cl. 435-7.800.
Picower Institute for Medical Research, The: *See—*
Bukrinsky, Michael I.; Cerami, Anthony; and Ulrich, Peter, 5,703,086, Cl. 514-275.000.
Pienkowski, David A., to University of Kentucky Research Foundation, The. Implant having reduced generation of wear particulates. 5,702,456, Cl. 623-18.000.
Pierburg AG: *See—*
Sari, Osman; and Blank, Helmut, 5,701,874, Cl. 123-571.000.
Pierce, John R.; and Van Duyne, Scott A., to Leland Stanford Junior University, The Board of Trustees of the. Passive nonlinear filter for digital musical sound synthesizer and method. 5,703,313, Cl. 84-622.000.
Pieters, Ferdinandus A., to Micropump, Inc. Fluid pump with bearing set having lubrication path. 5,702,234, Cl. 417-53.000.
Pietrelli, Nino, to HTM Sport S.p.A. Regulator provided with a movable deflector. 5,701,890, Cl. 128-205.240.
Pifco Limited: *See—*
Sharples, James Henry, 5,702,623, Cl. 219-436.000.
Pigott, William R.: *See—*
McCormick, Steve H.; and Pigott, William R., 5,701,963, Cl. 175-215.000.
Pike, Russell E.: *See—*
Saksena, Anil K.; Girijavallabhan, Viyyoor M.; Lovey, Raymond G.; Pike, Russell E.; Wang, Haiyan; Liu, Yi-Tsung; Ganguly, Ashit K.; and Bennett, Frank, 5,703,079, Cl. 514-252.000.
Saksena, Anil K.; Girijavallabhan, Viyyoor M.; Lovey, Raymond G.; Pike, Russell E.; Wang, Haiyan; Liu, Yi-Tsung; Ganguly, Ashit K.; and Bennett, Frank, 5,703,236, Cl. 544-366.000.
Pike-Biegunski, Michael J.: *See—*
Hayes, Earl J.; Hutchinson, Timothy A.; Hein, David A.; Shen, Alexander; and Pike-Biegunski, Michael J., 5,703,757, Cl. 361-752.000.
Pileski, Michael J.: *See—*
Wood, Robert J.; Pileski, Michael J.; and Pasik, Gregory E., 5,702,345, Cl. 600-109.000.
Piller, Oswald. Device for the production of pretzels. 5,702,732, Cl. 425-145.000.
Pilot, John F.; Madamba, Shirley M.; and Mullen, Penny M., to Sun Chemical Corporation. Reduced scratch sensitization in nucleated photographic film. 5,702,864, Cl. 430-264.000.
Pinard, Deborah L.; and Letkeman, Kim D., to Mitel Corporation. Portable telephone user profiles using central computer. 5,703,942, Cl. 379-207.000.
Pinchasik, Gregory: *See—*
Richter, Jacob; Pinchasik, Gregory; and Yaron, Ira, 5,702,414, Cl. 606-160.000.
Pinnacle Brands, Inc.: *See—*
Anderson, Victor G., 5,704,061, Cl. 396-330.000.
Pinto, Akiva: *See—*
Pinto, Michal; and Pinto, Akiva, 5,701,939, Cl. 160-84.010.
Pinto, Ivan; Perez, Gerardo; and Bowersox, Clarence W., Jr., to Accutrol Company, Inc. Unit dose bulk material sampling apparatus with controlled pressure applicator. 5,703,301, Cl. 73-864.630.
Pinto, Michal; and Pinto, Akiva. Sun blocking shade device. 5,701,939, Cl. 160-84.010.
Pintus, Nice: *See—*
Perini, Umberto; Martinelli, Paolo; Golinelli, Elena; Musazzi, Sergio; Trespidi, Franco; and Pintus, Nice, 5,703,690, Cl. 356-436.000.
Pioneer Electronic Corporation: *See—*
Iida, Tetsuya; Jinno, Satoshi; and Higuchi, Takanobu, 5,702,792, Cl. 428-64.100.
Komaki, Toshihiro, 5,703,437, Cl. 313-587.000.
Miyagi, Takahiro; Takaya, Shigeru; and Masunaga, Yoshifumi, 5,703,864, Cl. 369-112.000.
Pioneer Hi-Bred Int'l, Inc.: *See—*
Rao, Aragula Gururaj, 5,703,049, Cl. 514-12.000.
Pioneer Laboratories, Inc.: *See—*
Kilpela, Thomas S.; Iwanski, George J.; Songer, Matthew N.; and Songer, Robert J., 5,702,399, Cl. 606-72.000.
Pirelli Coordinamento Pneumatici S.p.A.: *See—*
Carlhoff, Christoph; Jogwich, Martin; Lorenzen, Claus-Jürgen; and Nahmias, Marco, 5,702,550, Cl. 156-64.000.
Pitchai, Rangasamy: *See—*
Gaffney, Anne M.; Kahn, Andrew P.; and Pitchai, Rangasamy, 5,703,254, Cl. 549-536.000.
Pitcher, Philip G.: *See—*
Miller, Joseph; Pearson, Derek P. A.; and Pitcher, Philip G., 5,702,830, Cl. 428-611.000.
Pitney Bowes Inc.: *See—*
Gottlieb, Robert K.; Grossman, Richard A.; Ifkovits, Michael R.; and Ruess, Philip G., 5,702,098, Cl. 270-58.060.
Pitterna, Thomas: *See—*
Früh, Thomas; Pitterna, Thomas; Murata, Toshiki; Svensson, Lene D.; Yuumoto, Yoko; and Sakaki, Junichi, 5,703,106, Cl. 514-378.000.
Planells Almerich, Francisco. System for charging the battery of watches without opening the lid. 5,703,460, Cl. 320-2.000.
Plasphalt Project Ltd. Co.: *See—*
Fishback, Gary M.; Egan, Dennis M.; and Stelmar, Hilary, 5,702,199, Cl. 404-17.000.
Platz, Winfried: *See—*
Horsley, Scott W.; and Platz, Winfried, 5,702,593, Cl. 210-122.000.
Pliska, Lee. Tail bone cushion. 5,702,153, Cl. 297-256.160.
Pochini, Andrea: *See—*
Ohnishi, Yoshitake; Fujita, Jun-Ichi; Arduini, Arturo; Casnati, Alessandro; Pochini, Andrea; and Ungaro, Rocco, 5,702,620, Cl. 216-49.000.
Pohl, John R.: *See—*

Simmons, Scott C.; Pohl, John R.; Guess, Terrell M.; Rushing, Douglas A.; Caputo, Michael P., Jr.; and Billica, Roger D., 5,701,904, Cl. 128-670.000.
Polacek, Richard; and Popovich, Dan, to Excellon Automation Company. Retractable registration pin apparatus. 5,702,213, Cl. 409-218.000.
Poleschuk, Leroy A.: *See—*
 Javery, Robert P.; Lau, Daniel T.; Wright, James B.; and Poleschuk, Leroy A., 5,701,660, Cl. 29-622.000.
Polgar, Tibor; and Mikl, Rudolf, to EH-Schrack Components Aktiengesellschaft. Bistable switching arrangement. 5,703,554, Cl. 335-229.000.
Polsky, Steven E.: *See—*
 Sattar, Sohail; and Polsky, Steven E., 5,703,940, Cl. 379-201.000.
Polymer Latex GmbH & Co. KG: *See—*
 Sauer, Thomas, 5,703,156, Cl. 524-802.000.
Polymer Processing Research Institute Ltd.: *See—*
 Yoshida, Sumio; Komazawa, Takashi; Kurihara, Kazuhiko; and Yazawa, Hiroshi, 5,702,657, Cl. 264-112.000.
Pond, Dennis C., to Caterpillar Inc. Method and apparatus for heat treating a bushing. 5,702,667, Cl. 266-249.000.
Pons, Pascal; and Molin, Renzo Dal, to ELA Medical S.A. Automatic adjustment of electrical signal parameters. 5,702,426, Cl. 607-27.000.
Pool, L. Frank. Patient care utility cart. 5,702,115, Cl. 280-47.350.
Pope, Kevin; and Hartmann, Paul R., to Applied Digital Access. Facilities data link handler in a performance monitoring and test system. 5,703,871, Cl. 370-248.000.
Popov, Alexander; and Barath, Peter, to Cedars-Sinai Medical Center. Method and devices for performing vascular anastomosis. 5,702,412, Cl. 606-159.000.
Popovich, Dan: *See—*
 Polacek, Richard; and Popovich, Dan, 5,702,213, Cl. 409-218.000.
Popovich, Mark Phillip: *See—*
 Anderson, Michael John; Johnson, Gary Carl; Popovich, Mark Phillip; and Christensen, Jeffrey Eames, 5,702,775, Cl. 428-1.000.
Popp, Thomas: *See—*
 von Schnering, Hans-Georg; Becker, Winfried; Schwarz, Martin; Hettich, Bernhard; Hartweg, Martin; Walz, Leonhard; and Popp, Thomas, 5,703,021, Cl. 505-501.000.
Porter, Thomas R., to University of Nebraska, The Board of Regents of the. Perfluorobutane ultrasound contrast agent and methods for its manufacture and use. 5,701,899, Cl. 428-662.020.
Portney, Valdemar, to Allergan. Multifocal ophthalmic lens for dim-lighting conditions. 5,702,440, Cl. 623-5.000.
Posey, William P.: *See—*
 Hsu, Steve I.; Nussbaum, Howard S.; Posey, William P.; and Taylor, Stephen D., 5,703,514, Cl. 327-237.000.
Poss, Michael A.: *See—*
 Felsenstein, Kevin; Smith, David W.; Poss, Michael A.; Chaturvedula, Prasad; and Sloan, Charles P., 5,703,129, Cl. 514-613.000.
Postema, Aaldrik Roelf: *See—*
 Gillis, Herbert Russell; Stanssens, Dirk; De Vos, Rik; Postema, Aaldrik Roelf; and Randall, David, 5,703,136, Cl. 521-128.000.
Poston, Ricky Lee: *See—*
 Cline, Troy Lee; Isensee, Scott Harlan; Poston, Ricky Lee; and Werner, Jon Harald, 5,704,009, Cl. 395-2.840.
Pothier, Albert; Marik, Gregory C.; and Givens, Derrick, to Smith & Nephew Inc. Tibial prosthesis with polymeric liner and liner insertion/removal instrument. 5,702,463, Cl. 623-20.000.
Pothier, Albert J.: *See—*
 Lackey, Jennifer J.; Pothier, Albert J.; Carls, Thomas A.; Johnson, Chris E.; and Elliott, Scott, 5,702,464, Cl. 623-20.000.
Potteiger, Brian D.: *See—*
 Hurst, Jerry C.; and Potteiger, Brian D., 5,702,[illegible], Cl. 242-601.000.
Potter, Michael D., to Advanced Vision Technologies Inc. Laminar composite lateral field-emission cathode. 5,703,380, Cl. 257-10.000.
Potter, Sharon L.: *See—*
 Roberts, Walden K.; Selitrennikoff, Claude P.; Laue, Bridget E.; and Potter, Sharon L., 5,703,044, Cl. 514-12.000.
Potts, Matthew D.: *See—*
 Boddy, Ian; Potts, Matthew D.; and Foote, Keith D., 5,703,731, Cl. 359-841.000.
 Boddy, Ian; Potts, Matthew D.; Foote, Keith D.; and Ruse, James, 5,703,732, Cl. 359-841.000.
Poulton, Craig K. Electronic exercise enhancer. 5,702,323, Cl. 482-8.000.
Powell, Douglas H.: *See—*
 Hansen, Louis J., Jr.; Maligad, Luciano J., Jr.; and Powell, Douglas H., 5,701,927, Cl. 137-271.000.
Powell, Ronald Allan, to Varian Associates, Inc. Optical spectrometer. 5,703,689, Cl. 356-432.000.
Power, Patricia L.; and Rakhit, Sumanas, to Allelix Biopharmaceuticals. Bicyclic nonane and decane compounds having dopamine receptor affinity. 5,703,072, Cl. 514-211.000.
Power Tool Holders Incorporated: *See—*
 Carter, E. Russell, 5,701,779, Cl. 72-356.000.
Powers, Dale R.: *See—*
 Henderson, Danny L.; and Powers, Dale R., 5,703,191, Cl. 528-31.000.
Powles, Trevor J.; and Imran, Mir A., to Advanced Cytometric Inc. Aspiration needle apparatus incorporating its own vacuum and method and adapter for use therewith. 5,701,910, Cl. 128-764.000.
Poxleitner, Martin: *See—*
 Vry, Uwe; Sager, Ottmar; Strähle, Fritz; and Poxleitner, Martin, 5,702,350, Cl. 600-166.000.
PPG Industries, Inc.: *See—*
 Swarup, Shanti; and Sadvary, Richard J., 5,703,155, Cl. 524-558.000.
Pragnacharyulu, Palle V. P.: *See—*
 Abushanab, Elie; and Pragnacharyulu, Palle V. P., 5,703,084, Cl. 514-261.000.
Prasad, Romeo. Safety control system responsive to carbon monoxide smoke and the like. 5,703,749, Cl. 361-170.000.
Prater, Keith B.: *See—*
 Frost, Jonathan C.; Gascoyne, John M.; Hards, Graham A.; Wilkinson, David P.; and Prater, Keith B., 5,702,839, Cl. 429-42.000.
Praxair S.T. Technology, Inc.: *See—*
 Foster, John; Taylor, Alan; and Chatterley, Martin Patrick, 5,702,574, Cl. 204-224.00R.
Praxair Technology, Inc.: *See—*
 Cheng, Alan Tat Yan; and DeVack, Donald Leonard, 5,701,745, Cl. 62-51.100.
 Howard, Henry Edward; and Bonaquist, Dante Patrick, 5,701,763, Cl. 62-644.000.
 Schaub, Herbert Raymond; and Smolarek, James, 5,702,504, Cl. 95-101.000.
Praxiar Technology, Inc.: *See—*
 Bikson, Benjamin; Giglia, Salvatore; Nicholas, Patrick Samuel, Jr.; and Ford, Cheryl Ann, 5,702,601, Cl. 210-321.790.
Precision Research & Development: *See—*
 Miller, James R., 5,701,936, Cl. 140-24.000.
Precision System Science Co., Ltd.: *See—*
 Tajima, Hideji, 5,702,950, Cl. 436-49.000.
Precision Valve Corporation: *See—*
 Ferrara, Daniel A., Jr., 5,702,036, Cl. 222-402.130.
PRECITEX GmbH: *See—*
 Schubert, Peter; and Adamiak, Hubert, 5,702,622, Cl. 219-121.750.
Preis, Josef, to Siemens Aktiengesellschaft. Flyback converter having a regulated output voltage. 5,703,765, Cl. 363-21.000.
Preiss, Shoshana. Disposable sanitary articles. 5,702,379, Cl. 604-385.100.
Premiski, Vladimir: *See—*
 Brassai, Zoltan; Schneider, Bjoern; and Premiski, Vladimir, 5,702,320, Cl. 475-159.000.
Presdorf, Ronald Lynn: *See—*
 Ford, James Arthur; Bertva, Don Lee; Kennedy, James Murrell; and Presdorf, Ronald Lynn, 5,701,940, Cl. 160-84.050.
Presnail, James K.: *See—*
 Hoy, Marjorie A.; and Presnail, James K., 5,702,932, Cl. 435-172.300.
Pressler, John E., to Dana Corporation. Live spindle four wheel drive motor vehicle wheel end assembly. 5,702,162, Cl. 301-105.100.
Preston, Allen Herman: *See—*
 George, Jonel; Glassen, Steven Gardner; Krygowski, Matthew Anthony; Kim, Moon Ju; Preston, Allen Herman; and Stucki, David Emmett, 5,704,055, Cl. 395-402.000.
Prevost, Isabelle; and Rojey, Alexandre, to Institut Francais du Petrole. Method and installation for the liquefaction of natural gas. 5,701,761, Cl. 62-613.000.
Price, Arnold James. Particular removal assembly and method. 5,702,617, Cl. 210-803.000.
Price, Gregory G.: *See—*
 Jackson, Kenneth S.; Persons, Charles D.; Krebs, Robert D.; Price, Gregory G.; and Bales, Joel P., 5,702,388, Cl. 606-54.000.
Price, John Cairl: *See—*
 Biggs, Kenneth L.; and Price, John Cairl, 5,702,049, Cl. 228-105.000.
Priou, Christian; and Kerr, Stuart, III, to Rhone-Poulenc Chimie. Initiators for the cationic crosslinking of polymers containing organofunctional groups, 5,703,137, Cl. 522-25.000.
Procter & Gamble Company, The: *See—*
 Caravajal, Gregory Stephen; and Marshall, Janet Layne, 5,703,027, Cl. 510-232.000.
 Doumen, Achille Jules Edmond; Goovaerts, Luc; and Vega, Jose Luis, 5,703,037, Cl. 510-444.000.
 Fitzgerald, Jamesina Anne, 5,702,729, Cl. 424-653.000.
 Huber, Michael T.; Cabell, David W.; Jezek, Robert J., Sr.; and Goulait, David J. K., 5,702,551, Cl. 156-73.100.
 Iakovides, Panos, 5,703,036, Cl. 510-427.000.
 Offshack, Edward Robert; Painter, Jeffrey Donald; and Aquino, Melissa Dee, 5,703,034, Cl. 510-376.000.
 Osborn, Thomas W., III; Sugahara, Kazuko; and Hines, Letha M., 5,702,382, Cl. 604-385.200.
 Perkins, Christopher Mark; and Scheper, William Michael, 5,703,030, Cl. 510-311.000.
 Randall, Jared Lynn; and Godlewski, Jane Ellen, 5,703,231, Cl. 540-200.000.
 Setser, Drew Douglas; and Deckner, George Endel, 5,703,026, Cl. 510-152.000.
 Sherry, Alan Edward; Connor, Daniel Stedman; Stidham, Robert Emerson; and Vinson, Phillip Kyle, 5,703,033, Cl. 510-237.000.
 Trani, Marina; and Ricci, Carlo, 5,702,635, Cl. 252-186.270.
 Trani, Marina; Trigiante, Guiseppe; and Frasier, Ellie Marie, 5,703,031, Cl. 510-312.000.
 Zyngier, Alexandre; Wiegand, Benjamin Carl; Figueroa, Alejandro; and Brunsman, Michael August, 5,703,025, Cl. 510-147.000.
Proctor, Richard John; Jeffrey, Mark Timothy; and Maddern, Thomas Slade, to GPT Limited. ATM switching arrangement. 5,703,879, Cl. 370-398.000.
Proett, Mark A.; Chin, Wilson C.; and Chen, Chih C., to Halliburton Energy Services, Inc. Method of formation testing. 5,703,286, Cl. 73-152.050.

Profile Systems, LLC: *See—*
 Conkright, Gary W., 5,703,786, Cl. 364-479.140.
Prota, Giuseppe: *See—*
 Wenke, Gottfried; and Prota, Giuseppe, 5,702,712, Cl. 424-401.000.
Provencher, Daniel B.; Stokoe, Philip T.; and Gailus, Mark W., to Teradyne, Inc. Electrical connector assembled from wafers. 5,702,258, Cl. 439-79.000.
Provoost, Guido F.: *See—*
 Llanos, Zenon R.; Provoost, Guido F.; Deering, William G.; and Debaene, Frans J., 5,702,500, Cl. 75-10.250.
Prutchi, David; and Simmons, Roy, III, to Sulzer Intermedics Inc. Subcutaneous electrical data port. 5,701,895, Cl. 128-630.000.
Psihoules, Anthony: *See—*
 Hardy, Eugene E.; and Psihoules, Anthony, 5,702,692, Cl. 424-70.100.
Puar, Deepraj S.; and Ranganathan, Ravi, to NeoMagic Corporation. Graphics controller integrated circuit without memory interface. 5,703,806, Cl. 365-181.000.
Pucci, Bernard: *See—*
 Pavia, Andre A.; Pucci, Bernard; Riess, Jean G.; and Zarif, Leila, 5,703,126, Cl. 514-562.000.
Puckett, Wallace E.; Zollinger, Mark L.; and Corral, Fernando Del, to Buckman Laboratories International Inc. Method for the detoxification of mustard gas sulfur-containing quaternary ammonium ionene polymers and their use as microbicides. 5,703,131, Cl. 514-642.000.
Pugia, Michael, to Bayer Corporation. Ascorbate resistant detection of hydrogen peroxide. 5,702,955, Cl. 436-135.000.
Pullin, Edward J.: *See—*
 Wu, Gary C.; Pawar, Chandra S.; Leibowitz, Steven H.; Pullin, Edward J.; Hazzard, Michael J.; and Duggan, Joseph C., 5,704,052, Cl. 395-380.000.
Punzenberger, Manfred, to Siemens Aktiengesellschaft. Current driver circuit with transverse current regulation. 5,703,477, Cl. 323-313.000.
Purrington, Challis: *See—*
 Boggs, Andrew Keith; Hoang, Quy N.; Jacobs, Joe; Mullen, John Mark; Purrington, Challis; and Weaver, Laura A., 5,703,872, Cl. 370-252.000.
Pyait, Jury Leonidovich: *See—*
 Korzhenkov, Petr Nikolaevich; Pyait, Jury Leonidovich; Smagin, Alexandr Semenovich; and Epshtein, Alexandr Lvovich, 5,703,603, Cl. 343-753.000.
Pyun, Kwang-Eui: *See—*
 Yoon, Hyung-Sup; Lee, Jin-Hee; Park, Chul-Sun; and Pyun, Kwang-Eui, 5,702,975, Cl. 437-61.000.
QEL Inc.: *See—*
 Bardash, Michael J., 5,703,923, Cl. 378-87.000.
Qian, Changgeng: *See—*
 Cai, Xiong; Fura, Aberra; and Qian, Changgeng, 5,703,093, Cl. 514-312.000.
Qiu, Cindy Xing: *See—*
 Shih, Ishiang; Phong, Linh Ngo; Qiu, Cindy Xing; and Laou, Philips, 5,703,357, Cl. 250-226.000.
QO Chemicals, Inc.: *See—*
 Akerberg, Denis W., 5,703,144, Cl. 523-144.000.
Quach, Frank: *See—*
 Brown, Gregory S.; Quach, Frank; and Silva, Jose, 5,702,262, Cl. 439-188.000.
QUALCOMM Incorporated: *See—*
 Gardner, William R., 5,704,001, Cl. 395-2.280.
 Ziv, Noam Abraham; and Padovani, Roberto, 5,703,902, Cl. 375-200.000.
Quan, Clifton; Holbrook, Peter; Batterton, Bill; Fitzgerald, Pat; Roper, Dan; and Takaki, Min, to Hughes Electronics. Injection molded offset slabline RF feedthrough for active array aperture interconnect. 5,703,599, Cl. 342-368.000.
Quenan, Gary O.; and Hull, Tommy Lee, to OPE, Inc. Offshore support structure method and apparatus. 5,702,206, Cl. 405-227.000.
Quentric, Jean-François: *See—*
 Lefebvre, Bruno; Jacquet, René; and Quentric, Jean-François, 5,703,551, Cl. 335-126.000.
Quest International Flavors & Food Ingredients Company, a division of Indopco, Inc.: *See—*
 Vandenbergh, Peter A.; Walker, Shirley A.; and Kunka, Blair S., 5,702,923, Cl. 435-71.300.
Quittenbaum, Jens: *See—*
 Reuter, Dieter; and Quittenbaum, Jens, 5,702,150, Cl. 296-180.100.
Qureshi, Qadeer A.: *See—*
 Bailey, Joseph A.; and Qureshi, Qadeer A., 5,703,919, Cl. 377-16.000.
Raak, Keijo, to Ahlstrom Machinery Corporation. Apparatus for recovering heat in a spent liquor recovery boiler. 5,701,829, Cl. 110-238.000.
Rabarot, Marc: *See—*
 Thony, Philippe; Rabarot, Marc; and Molva, Engin, 5,703,890, Cl. 372-12.000.
Rabbe, Louis-Marie; Boyd, Lawrence M.; Chevalier, Jean-Louis; and Moreau, Jean-Charles, to Sofamor Danek Group. Adjustable vertebral body replacement. 5,702,453, Cl. 623-17.000.
Rabinovich, Michael Boris: *See—*
 Tabarovsky, Leonty Abraham; and Rabinovich, Michael Boris, 5,703,773, Cl. 364-422.000.
Racal Radar Defence Systems Limited: *See—*
 Watts, Simon, 5,703,592, Cl. 342-93.000.
Racine, Lloyd G.: *See—*
 Siebelink, Robert John, Jr.; and Racine, Lloyd G., 5,702,779, Cl. 428-14.000.
Racioppi, Stephen G.; and Brinker, James P., to Micro Test, Inc. Microbial transport media. 5,702,944, Cl. 435-253.600.
Radcliffe, Marc D.: *See—*
 Johnson, Gilbert C.; Radcliffe, Marc D.; Savu, Patricia M.; Sunstad, Daniel C.; and Spawn, Terence D., 5,702,637, Cl. 252-299.610.
Raddatz, Russell E.: *See—*
 Martin, John P.; Skewes, Susan M.; and Raddatz, Russell E., 5,702,992, Cl. 442-123.000.
Rademacher, Wilhelm: *See—*
 Baumann, Ernst; Rheinheimer, Joachim; Vogelbacher, Uwe Josef; Bratz, Matthias; Theobald, Hans; Gerber, Matthias; Westphalen, Karl-Otto; Walter, Helmut; and Rademacher, Wilhelm, 5,703,017, Cl. 504-227.000.
Radja, Thomas S. Carrier for hockey articles and equipment. 5,702,140, Cl. 294-146.000.
Radosevich, Roseann: *See—*
 Beckman, Ralph A.; Schwartz, Stephen A.; Radosevich, Roseann; and Trammell, Michele P., 5,702,282, Cl. 446-267.000.
RADTEK OY: *See—*
 Hiismäki, Pekka; and Auterinen, Iiro, 5,703,918, Cl. 376-458.000.
Radtke, Darnell Clarence: *See—*
 Kamps, Richard Joseph; Behnke, Janica Sue; Chen, Fung-jou; and Radtke, Darnell Clarence, 5,702,571, Cl. 162-117.000.
Rae, Kit: *See—*
 Hall, David K.; and Rae, Kit, 5,701,675, Cl. 30-123.000.
Raeber, Eric: *See—*
 Bidiville, Marc; Raeber, Eric; Arreguit, Javier; Buczek, Harthmuth; Van Shaik, Floris A.; Bauduin, François; and O'Keeffe, Denis, 5,703,356, Cl. 250-221.000.
Raissyan, Anousheh; Wood, Kody Raymond; Jacobi, Michael Joseph; King, Linda S.; Seydel, Lee Chopek; Torbert, Michele Pauline; and Leonard, Robert Gary, to MCI Communications Corporation. Automated telephone operator services. 5,703,935, Cl. 379-88.000.
Rajagopalan, Murali; and Harris, Kevin, to Acushnet Company. Golf ball compositions based on blends of olefinic ionomers and metallocene catalyzed polymers. 5,703,166, Cl. 525-196.000.
Rakhit, Sumanas: *See—*
 Power, Patricia L.; and Rakhit, Sumanas, 5,703,072, Cl. 514-211.000.
Ramsey, Anita K.: *See—*
 Martell, Charles R.; Cassidy, Michael J.; Ramsey, Anita K.; Liu, Zih-Fang; Ting, Chou Ling; and McKellar, H. Anderson, 5,703,781, Cl. 364-470.060.
Randall, David: *See—*
 Gillis, Herbert Russell; Stanssens, Dirk; De Vos, Rik; Postema, Aaldrik Roelf; and Randall, David, 5,703,136, Cl. 521-128.000.
Randall, Jared Lynn; and Godlewski, Jane Ellen, to Procter & Gamble Company, The. Process for making antimicrobial compounds. 5,703,231, Cl. 540-200.000.
Ranganathan, Ravi: *See—*
 Puar, Deepraj S.; and Ranganathan, Ravi, 5,703,806, Cl. 365-181.000.
Ransomes America Corporation: *See—*
 Oliver, Joseph J.; Young, Christopher L.; and Bednar, Richard D., 5,703,569, Cl. 340-605.000.
Rao, Aragula Gururaj, to Pioneer Hi-Bred Int'l, Inc. High methionine derivatives of α-hordothionin for pathogen-control. 5,703,049, Cl. 514-12.000.
Rapp, Werner; and Schmidt, Peter, to Euchner & Co. Safety switch. 5,703,339, Cl. 200-17.00R.
Rappaport, Catherine: *See—*
 Trujillo, Edward M.; and Rappaport, Catherine, 5,702,949, Cl. 435-402.000.
Rasimus, Seppo; and Tolvanen, Heikki, to Saimatec Engineering Oy. Discharge apparatus having orbitally moving discharge ring. 5,702,183, Cl. 366-195.000.
Rattner, Manfred, to Siemens Aktiengesellschaft. Therapy apparatus with a radiation source. 5,703,922, Cl. 378-65.000.
Raut, Lionel: *See—*
 Buffet, Jean Claude; and Raut, Lionel, 5,703,552, Cl. 335-205.000.
Ravenscroft, Adrian C., to Boston Scientific Corporation. Stent delivery system. 5,702,418, Cl. 606-198.000.
Ray, Robert W. Zone demand controlled dual heat pump system and controller therefor. 5,701,750, Cl. 62-160.000.
Rayburn, Gary L.; Riffle, Rob G.; Walburn, Frederick J.; and Williams, Benjamin G., to W. L. Gore & Associates, Inc. Device and method for reinforcing surgical staples. 5,702,409, Cl. 606-151.000.
Razdan, Raj K.: *See—*
 Sharpe, Richard J.; Arndt, Kenneth A.; Galli, Stephen J.; Meltzer, Peter C.; Razdan, Raj K.; and Sard, Howard P., 5,703,088, Cl. 514-278.000.
Rchid, Abazid Amin. Protective member for metal scaffold knots or joints. 5,701,971, Cl. 182-179.000.
Rector, James L.; and Tobergte, Edward H., to Ed Tobergte Associates, Inc. Protective pad construction. 5,701,611, Cl. 2-455.000.
Reddersen, Brad R.; Shepard, Phillip W.; Moch, Rockie D.; and Williams, Jon Paul Charles, to Spectra-Physics Scanning Systems, Inc. Multiple-interface selection system for computer peripherals. 5,703,347, Cl. 235-472.000.
Reddy, Vaddi Butchi; and Reilly, Kenneth T., to Osram Sylvania Inc. ZnS:Cu electroluminescent phosphor and method of making same. 5,702,643, Cl. 252-301.650.
Reder, Paul Joseph: *See—*

Allen, Wade C.; Goodwin, Jeremy Philip; Nielsen, Robert Louis; Reder, Paul Joseph; and Toltzman, Douglas, 5,704,041, Cl. 395-200.150.
Redlich, George Harvey; Willingham, Gary Lewis; and Chapman, John Steven, to Rohm and Haas Company. Stable, solid form antimicrobial compositions comprising 3-isothiazolones. 5,703,105, Cl. 514-372.000.
Redpath, Sarah D., to International Business Machine Corp. Snap control for relocating elements of a graphical user interface. 5,704,050, Cl. 395-339.000.
Reed, Charles L.: *See*—
Cripe, Jerry D.; Maudie, Theresa Ann; Reed, Charles L.; and Menchio, Michael P., 5,703,482, Cl. 324-158.100.
Reed, John C.; and Sato, Takaaki, to Burnham Institute, The. Interaction of proteins involved in a cell death pathway. 5,702,897, Cl. 435-6.000.
Reed, Randy: *See*—
Koka, George; and Reed, Randy, 5,701,728, Cl. 56-12.700.
Rees, John Joseph M.; and Hixon, Leonard L., Jr., to Dixie Yarns, Inc. System for forming elastomeric core/staple fiber wrap yarn using a spinning machine. 5,701,729, Cl. 57-3.000.
Reese, Owen N., II: *See*—
Franklin, Joseph F.; and Reese, Owen N., II, 5,701,722, Cl. 53-399.000.
Reese Products, Inc.: *See*—
Hanson, Marvin L.; McCoy, Richard; and Krager, Jon L., 5,702,118, Cl. 280-491.500.
Reesor, David Roy Joseph: *See*—
Reesor, David Warren; and Reesor, David Roy Joseph, 5,701,649, Cl. 29-252.000.
Reesor, David Warren; and Reesor, David Roy Joseph, to Hydra-Tech International Corporation. Coupled draft key puller. 5,701,649, Cl. 29-252.000.
Refranco Corp.: *See*—
Tylko, Jozef K., 5,702,621, Cl. 219-121.590.
Regents Of The University Of Michigan, The: *See*—
Yamada, Tadataka; and Gantz, Ira, 5,703,220, Cl. 536-23.500.
Reichelt, Helmut: *See*—
Schefczik, Ernst; Grüttner-Merten, Sabine; Saling, Peter; Sens, Rüdiger; and Reichelt, Helmut, 5,703,238, Cl. 546-119.000.
Reid, Alister Peter; and Sumner, Christopher, to Reilor Limited. Pet door. 5,701,702, Cl. 49-169.000.
Reifenhauser GmbH & Co. Maschinenfabrik: *See*—
Reifenhäuser, Hans; and Baumeister, Michael, 5,702,730, Cl. 425-72.200.
Reifenhäuser, Hans; and Baumeister, Michael, to Reifenhauser GmbH & Co. Maschinenfabrik. Apparatus for making a continuous thermoplastic fleece. 5,702,730, Cl. 425-72.200.
Reiffenrath, Volker: *See*—
Junge, Michael; and Reiffenrath, Volker, 5,702,640, Cl. 252-299.010.
Reihlen, Eckart: *See*—
Treutler, Christoph; Benz, Rolf; Muenzel, Horst; Schmidt, Steffen; Reihlen, Eckart; and Lock, Andreas, 5,703,287, Cl. 73-204.260.
Reilly, Kenneth T.: *See*—
Reddy, Vaddi Butchi; and Reilly, Kenneth T., 5,702,643, Cl. 252-301.650.
Reilor Limited: *See*—
Reid, Alister Peter; and Sumner, Christopher, 5,701,702, Cl. 49-169.000.
Remboski, Donald J., Jr.: *See*—
McClish, Michael A.; Lynch, Marvin L.; Self, Margaret A.; Steinl, Gregory; and Remboski, Donald J., Jr., 5,703,283, Cl. 73-116.000.
Renaldo, Alfred Floyd: *See*—
McKean, Dennis Richard; and Renaldo, Alfred Floyd, 5,702,756, Cl. 427-127.000.
Renard, Pierre: *See*—
Durand, Ludovic; Babingui, Jean-Paul; Moulin, Claudie; Robert-Piessard, Sylvie; Le Baut, Guillaume; Scalbert, Elisabeth; Caignard, Daniel-Henri; and Renard, Pierre, 5,703,118, Cl. 514-456.000.
Lesieur, Daniel; Fourmaintraux, Eric; Depreux, Patrick; Delagrange, Philippe; Renard, Pierre; and Guardiola-Lemaitre, Béatrice, 5,703,121, Cl. 514-469.000.
Renaudineau, Joel: *See*—
Keita, Gabriel; Renaudineau, Joel; and Yean, Lannirith, 5,702,825, Cl. 428-500.000.
Renegade Action Sports, Inc.: *See*—
Peacock, Ivan P., 5,702,042, Cl. 224-662.000.
Renfer, Dale S.: *See*—
Schank, Richard L.; Renfer, Dale S.; Limburg, William W.; Kunzmann, Brendan W.; and Pai, Damodar M., 5,702,854, Cl. 430-59.000.
Renfrew, Andrew Hunter Morris; and Shawcross, Andrew Paul, to Zeneca Limited. Water-soluble dyes which are polymerizable containing molecules which contain a nucleophilic group and an electrophilic group. 5,703,215, Cl. 534-642.000.
Renfroe, H. Burt: *See*—
Garvey, David S.; Letts, L. Gordon; Renfroe, H. Burt; and Tam, Sang William, 5,703,073, Cl. 514-226.500.
Renkema, Kornelis: *See*—
Martin, Wallace Anthony; van der Meulen, Wybren; Menezes, Edgar V.; Renkema, Kornelis; Phillips, Robert B.; Lust, Victor; Wu, Jongliang; and Eshuis, Gerbrand, 5,702,735, Cl. 425-548.000.
Renkema, Peter J.: *See*—
Shimp, Lawrence A.; and Renkema, Peter J., 5,702,677, Cl. 423-308.000.
Renkiewicz, Richard Raymond: *See*—
Baragi, Vijaykumar; Boschelli, Diane Harris; Connor, David Thomas; and Renkiewicz, Richard Raymond, 5,703,119, Cl. 514-459.000.
Renn, Sandra; and Stotz, Wolf Gunter, to Voith Sulzer Papiermaschinen GmbH. Roll arrangement. 5,702,337, Cl. 492-7.000.
Renteria, William, to Versatex Inc. Walking assistance device. 5,702,326, Cl. 482-68.000.
Rentfrow, Darrell: *See*—
McKibben, Kenneth D.; Gould, Alan P.; Wuepper, Thomas E.; Minor, Daniel D.; Salgat, Mark T.; Marthaler, David; Speaks, Jackie M.; Macheske, Robert L.; Good, David; Gillette, Richard A.; Bond, Philip L.; Coyle, Donald C.; Rentfrow, Darrell; Stiens, Thomas O.; and Stevens, Larry M., 5,701,945, Cl. 164-130.000.
Repice, Ronald M.; Repice, Ronald M., II; and Clupper, Harold E., to Repice, Ronald M.; and Repice, II, Ronald M. Portable adjustable traction appliance to treat carpal tunnel syndrome and other problems of the wrist. 5,702,355, Cl. 602-21.000.
Repice, Ronald M., II: *See*—
Repice, Ronald M.; Repice, Ronald M., II; and Clupper, Harold E., 5,702,355, Cl. 602-21.000.
Research International, Inc.: *See*—
Saaski, Elric W.; and Lawrence, Dale M., 5,702,618, Cl. 216-2.000.
Resio, Donald T.; Briggs, Michael J.; Fowler, Jimmy E.; and Markle, Dennis G., to United States of America, Army. Floating "V" shaped breakwater. 5,702,203, Cl. 405-26.000.
Respironics, Inc.: *See*—
Hete, Bernie F.; and Srock, James D., 5,701,883, Cl. 128-204.260.
Rettker, James Palmer; Peterson, William Edward; Chandler, Philip Bonn; and Lee, John Howard, to Avery Dennison Corporation. Permanent xerographic toner-receptive index divider. 5,702,802, Cl. 428-192.000.
Reuser, Leonardus Theodorus Maria: *See*—
Van Den Mosselaar, Franciscus Laurentius Maria Theresia; Termaten, Gerrit Johannus; and Reuser, Leonardus Theodorus Maria, 5,701,812, Cl. 100-91.000.
Reuter, Dieter; and Quittenbaum, Jens, to Dr. Ing. h.c.F. Porsche AG. Wind deflecting device for a convertible. 5,702,150, Cl. 296-180.100.
Reuther, Wolfgang: *See*—
Meixner, Hubert; Reuther, Wolfgang; and Königstein, Volker, 5,702,517, Cl. 106-316.000.
Reutimann, Ernest, to Nestec S.A. Granular particulate food composition and method of making. 5,702,741, Cl. 426-92.000.
Reynolds, William E.: *See*—
Horsky, Thomas N.; Reynolds, William E.; and Cloutier, Richard M., 5,703,372, Cl. 250-423.00R.
Rheinberger, Volker; Moszner, Norbert; Salz, Ulrich; and Voelkel, Thomas, to Ivoclar AG. Bicycloaliphatic 2-methylene-1,3-dioxepanes. 5,703,249, Cl. 549-337.000.
Rheinheimer, Joachim: *See*—
Baumann, Ernst; Rheinheimer, Joachim; Vogelbacher, Uwe Josef; Bratz, Matthias; Theobald, Hans; Gerber, Matthias; Westphalen, Karl-Otto; Walter, Helmut; and Rademacher, Wilhelm, 5,703,017, Cl. 504-227.000.
RHI Joint Venture: *See*—
Gerlach, C. Richard, 5,702,243, Cl. 418-132.000.
Rhodes, Gary H.: *See*—
Felgner, Philip L.; Wolff, Jon Asher; Rhodes, Gary H.; Malone, Robert Wallace; and Carson, Dennis A., 5,703,055, Cl. 514-44.000.
Rhone-Poulenc Chimie: *See*—
Priou, Christian; and Kerr, Stuart, III, 5,703,137, Cl. 522-25.000.
Riaziat, Majid L.: *See*—
Eckstein, James N.; Riaziat, Majid L.; and Virshup, Gary F., 5,703,706, Cl. 359-125.000.
Ribiere, Joel: *See*—
Meraldi, Jean-Paul; Ribiere, Joel; and Almon, Jean-Jacques, 5,702,547, Cl. 152-451.000.
Ricci, Carlo: *See*—
Trani, Marina; and Ricci, Carlo, 5,702,635, Cl. 252-186.270.
Ricciardi, Michael A.; and Griffiths, Anthony C. M., to Crain Industries, Inc. Controlled cooling of porous materials. 5,702,652, Cl. 264-37.000.
Rich, Larry D.: *See*—
Pellerite, Mark J.; Rich, Larry D.; and Sanders, James F., 5,702,509, Cl. 106-2.000.
Richard, Emery J.: *See*—
Goldstein, Arthur L.; Papastavros, Theodore G.; and Richard, Emery J., 5,702,582, Cl. 204-632.000.
Richardson, Alan David; Early, Paul Timothy; Brown, Larry Thomas; Ortmann, Walter Joseph; and Bos, Edward Albert, to Ford Motor Company. Fuel delivery system. 5,701,869, Cl. 123-497.000.
Richardson, Cedric D. Swimming pool cover assembly. 5,701,613, Cl. 4-502.000.
Richter, Jacob; Pinchasik, Gregory; and Yaron, Ira, to Optonol Ltd. Method of implanting an intraocular implant. 5,702,414, Cl. 606-166.000.
Rico, Joseph G.: *See*—
Bovy, Philippe R.; Rico, Joseph G.; Rogers, Thomas E.; Tjoeng, Foe S.; and Zablocki, Jeffery A., 5,703,125, Cl. 514-539.000.
Ricoh Company, Ltd.: *See*—
Hanyu, Yoshiaki; and Shimomae, Mutsuo, 5,704,020, Cl. 395-102.000.
Horiguchi, Hiroyuki; and Nakayama, Yoshinobu, 5,703,288, Cl. 73-204.260.
Ikegami, Takaaki; Rokutanzono, Takashi; and Kurimoto, Eiji, 5,702,855, Cl. 430-83.000.
Itoh, Masashi; and Koga, Yasutaka, 5,703,626, Cl. 345-173.000.

Miyazaki, Hideto, 5,703,455, Cl. 318-685.000.
Mori, Yasutomo; Orihara, Motoi; Hada, Kunihiko; and Miyamoto, Shuji, 5,703,006, Cl. 503-207.000.
Nagai, Kazukiyo; Adachi, Chihaya; Tamoto, Nozomu; and Sakon, Yohta, 5,702,833, Cl. 428-690.000.
Nishiyama, Kiyoharu, 5,703,628, Cl. 345-202.000.
Taguchi, Kazushige, 5,703,454, Cl. 318-685.000.
Torii, Masafumi; Furuya, Hiromi; Shimada, Masaru; and Tsutsui, Kyoji, 5,703,005, Cl. 503-201.000.
Ricoh Elemex Corporation: *See*—
Horiguchi, Hiroyuki; and Nakayama, Yoshinobu, 5,703,288, Cl. 73-204.260.
Ricoh Seiki Company, Ltd.: *See*—
Horiguchi, Hiroyuki; and Nakayama, Yoshinobu, 5,703,288, Cl. 73-204.260.
Ridenour, Ken W., to K.E.R. Associates, Inc. Method for applying metal-amino acid complexes as supplements to feed. 5,702,718, Cl. 424-438.000.
Rieger, Ulrich: *See*—
Feierlein, Johannes; and Rieger, Ulrich, 5,703,321, Cl. 102-427.000.
Riess, Jean G.: *See*—
Pavia, Andre A.; Pucci, Bernard; Riess, Jean G.; and Zarif, Leila, 5,703,126, Cl. 514-562.000.
Rietdyk, Jacob: *See*—
Fisher, Steven C.; Adams, Theodore C.; Stangeland, Maynard L.; Rietdyk, Jacob; and Winans, Paul R., 5,701,670, Cl. 29-890.010.
Riffle, Rob G.: *See*—
Rayburn, Gary L.; Riffle, Rob G.; Walburn, Frederick J.; and Williams, Benjamin G., 5,702,409, Cl. 606-151.000.
Riley, Dennis P.: *See*—
Stern, Michael K.; Cheng, Brian K.; Ebner, Jerry R.; and Riley, Dennis P., 5,703,273, Cl. 562-16.000.
Riley, Richard E., to Spectrol Electronics Corporation. Thick-film circuit element. 5,702,653, Cl. 264-61.000.
Rimoldi, John Matthew: *See*—
Kingston, David G. I.; Chaudhary, Ashok Gopal; Gharpure, Milind Moreshwar; Rimoldi, John Matthew; and Gunatilaka, A. A. Leslie, 5,703,247, Cl. 548-962.000.
Rinker, Jeffrey Earle: *See*—
Wachtendorf, Paul Trigg; Godbole, Sanjay Parushottam; and Rinker, Jeffrey Earle, 5,703,268, Cl. 558-466.000.
Ripka, William Charles: *See*—
Semple, Joseph Edward; Ardecky, Robert John; Nutt, Ruth Foelsche; Ripka, William Charles; Rowley, David C.; Lim-Wilby, Marguerita S. L.; and Brunck, Terence Kevin, 5,703,208, Cl. 530-331.000.
Riquier, Jean-Claude: *See*—
Chevallet, Jacques; and Riquier, Jean-Claude, 5,702,597, Cl. 210-195.200.
Rischke, Jorg Werner; and van Sprang, Wilhelmus Gijsbertus Leonardus, to Meco Equipment Engineers B.V. Method for selectively electroplating apertured metal or metallized products. 5,702,583, Cl. 205-82.000.
Riso, Frank E. Ice blocking cup lid. 5,702,024, Cl. 220-704.000.
Rissel, Eva: *See*—
Sezi, Recai; Borndoerfer, Horst; Ahne, Hellmut; Birkle, Siegfried; Kuehn, Eberhard; Leuschner, Rainer; Rissel, Eva; and Sebald, Michael, 5,703,186, Cl. 526-272.000.
Rite-Hite Corporation: *See*—
Hahn, Norbert; and Bender, Brian, 5,702,223, Cl. 414-401.000.
Rittenbaum, Jeffrey Alan, to Max Rittenbaum, Inc. Washing brush. 5,702,195, Cl. 401-289.000.
Rivoir, Roberto; Maloberti, Franco; and Torelli, Guido P., to Atmel Corporation. Digital to analog converter with dual resistor string. 5,703,588, Cl. 341-159.000.
Rizkalla, Nabil, to Scientific Design Company, Inc. Promoted silver catalyst. 5,703,001, Cl. 502-347.000.
Roberge, Paul. Winch handle. 5,702,088, Cl. 254-266.000.
Robert Bosch GmbH: *See*—
Dietz, Hermann; Gruenwald, Werner; De La Prieta, Claudio; Lindemann, Gert; Eisele, Ulrich; and Schmiedel, Carmen, 5,702,580, Cl. 204-426.000.
Dobler, Karl-Otto, 5,702,174, Cl. 362-80.000.
Kuesell, Matthias; Duell, Andreas; Bender, Karl; and Borchert, Kay, 5,703,282, Cl. 73-115.000.
Stumpe, Werner, 5,702,163, Cl. 303-9.620.
Treutler, Christoph; Benz, Rolf; Muenzel, Horst; Schmidt, Steffen; Reihlen, Eckart; and Lock, Andreas, 5,703,287, Cl. 73-204.260.
Zabler, Erich; Wolf, Joerg; and Lutz, Markus, 5,703,293, Cl. 73-504.020.
Robert, J. Brozek: *See*—
Larson, Carl O., Jr.; Smith, James S.; Chapman, John H.; Slimon, Scot A.; John, Trahan D.; Robert, J. Brozek; Franco, Alberto; McGarvey, John J.; Rosen, Marvin E.; and Pasque, Michael K., 5,702,430, Cl. 607-1.000.
Robert-Piessard, Sylvie: *See*—
Durand, Ludovic; Babingui, Jean-Paul; Moulin, Claudie; Robert-Piessard, Sylvie; Le Baut, Guillaume; Scalbert, Elisabeth; Caignard, Daniel-Henri; and Renard, Pierre, 5,703,118, Cl. 514-456.000.
Roberts, Jeffrey B.; and Hou, Daqing, to Schweitzer Engineering Laboratories, Inc. System for detection of transients from a coupling capacitor voltage transformer used in a protective relay. 5,703,745, Cl. 361-89.000.
Roberts, Keith M.: *See*—
Gorbics, Mark S.; Roberts, Keith M.; and Sumner, Richard L., 5,703,838, Cl. 368-120.000.
Roberts, Walden K.; Selitrennikoff, Claude P.; Lane, Bridget E.; and Potter, Sharon L., to Novartis Finance Corporation. Synergistic antifungal protein and compositions containing same. 5,703,044, Cl. 514-12.000.
Robertson, Derek Guy; and Shute, Marcus W., to Lucent Technologies Inc. Apparatus for housing a linearized optical fiber amplifier. 5,703,990, Cl. 385-135.000.
Robichaud, Ronald T., to Greif Bros. Corporation. Process for preparing thermoplastic polyolefin resin articles of reduced hydrocarbon permeability. 5,702,786, Cl. 428-35.700.
Robinson, Roger N., to Vistek Electronics Ltd. Method of and device for estimating motion in a video signal. 5,703,650, Cl. 348-413.000.
Roche Diagnostic Systems, Inc.: *See*—
Bannwarth, Wilhelm; Caspers, Patrick; Le Grice, Stuart; and Mous, Jan, 5,702,918, Cl. 435-69.300.
Roche Vitamins Inc.: *See*—
Veits, Joachim, 5,702,579, Cl. 204-522.000.
Rockefeller University, The: *See*—
Bucala, Richard J., 5,702,704, Cl. 424-137.100.
Rodabaugh, Ronald D.; and Loeker, Jerald W., to Armco Inc. Hydrogen peroxide pickling of stainless steel. 5,702,534, Cl. 134-7.000.
Rodriguez, Charles: *See*—
Jablonski, Paul L.; and Rodriguez, Charles, 5,701,845, Cl. 119-166.000.
Roduit, Jean-Paul: *See*—
Kiener, Andreas; Roduit, Jean-Paul; and Glöckler, Rainer, 5,702,930, Cl. 435-122.000.
Roemer, David J.; and Johnson, Scott. Cutting tool coolant device. 5,702,211, Cl. 408-56.000.
Rogers, Dan Paul; and Smith, Edward Freer, III, to Implant Innovations, Inc. Thermally stabilized casting core. 5,702,252, Cl. 433-173.000.
Rogers, Derek J.: *See*—
Clifford, Arthur L.; Dong, Dennis F.; Mumby, Timothy A.; and Rogers, Derek J., 5,702,587, Cl. 205-760.000.
Rogers, Jeffrey E. D.: *See*—
Brown, Gene W.; and Rogers, Jeffrey E. D., 5,702,602, Cl. 210-342.000.
Rogers, Theodore W.: *See*—
DeSpain, Julianne M.; Oloff, Lawrence D.; and Rogers, Theodore W., 5,702,354, Cl. 601-27.000.
Rogers, Thomas E.: *See*—
Bovy, Philippe R.; Rico, Joseph G.; Rogers, Thomas E.; Tjoeng, Foe S.; and Zablocki, Jeffery A., 5,703,125, Cl. 514-539.000.
Rogier, Donald J., Jr.: *See*—
Talley, John J.; Getman, Daniel P.; Lin, Ko-Chung; DeCrescenzo, Gary A.; Rogier, Donald J., Jr.; and Freskos, John N., 5,703,076, Cl. 514-237.500.
Rogina, Peter R.; and Macintosh, David, to WorldScape L.L.C. Image transformation and synthesis methods. 5,703,961, Cl. 382-154.000.
Rohm and Haas Company: *See*—
Redlich, George Harvey; Willingham, Gary Lewis; and Chapman, John Steven, 5,703,105, Cl. 514-372.000.
Rohm Co., Ltd.: *See*—
Amano, Toshio, 5,701,659, Cl. 29-671.000.
Kondo, Masahito; and Marumoto, Kyoji, 5,703,993, Cl. 386-35.000.
Kuga, Kaeko, 5,703,608, Cl. 345-99.000.
Tanaka, Toshimasa, 5,703,415, Cl. 307-66.000.
Yamamichi, Yoshifumi, 5,703,451, Cl. 318-492.000.
Rojey, Alexandre: *See*—
Prevost, Isabelle; and Rojey, Alexandre, 5,701,761, Cl. 62-613.000.
Rokey Corporation: *See*—
Rokita, Stephen R.; and Davis, John J., 5,702,046, Cl. 227-110.000.
Rokita, Stephen R.; and Davis, John J., to Rokey Corporation. Staple gun having a rotating lower housing. 5,702,046, Cl. 227-110.000.
Rokutanzono, Takashi: *See*—
Ikegami, Takaaki; Rokutanzono, Takashi; and Kurimoto, Eiji, 5,702,855, Cl. 430-83.000.
Rolph, Randy K.: *See*—
Wen, Cheng P.; Rolph, Randy K.; and Zielinski, Timothy T., 5,702,532, Cl. 118-730.000.
Romer, Duane R.: *See*—
Shankar, Ravi B.; Romer, Duane R.; and Pews, R. Garth, 5,703,102, Cl. 514-362.000.
Shankar, Ravi B.; Romer, Duane R.; and Pews, R. Garth, 5,703,114, Cl. 514-441.000.
Romerdahl, Cynthia: *See*—
Braña, Miguel Fernandez; Berlanga, José Maria Castellano; and Romerdahl, Cynthia, 5,703,089, Cl. 514-284.000.
Rommel, Jeffrey S.; Traxler, James T.; and Boettcher, Richard R. Process for the selective trihalogenation of ketones useful as intermediates in the synthesis of thiophenes. 5,703,248, Cl. 549-62.000.
Rommel, Reiner; and Stangler, Ulf, to Adolf Hottinger Maschinenbau GmbH. Apparatus for shooting foundry cores or molds. 5,701,946, Cl. 164-201.000.
Rong, Bor-Doou: *See*—
Ting, Tah-Kang Joseph; Hsieh, Ching-Chih; and Rong, Bor-Doou, 5,703,832, Cl. 365-233.000.
Roos, Filip; and Schwall, Ralph, to Genentech, Inc.. Protection against liver damage by HGF. 5,703,048, Cl. 514-12.000.
Roper, Dan: *See*—
Quan, Clifton; Holbrook, Peter; Batterton, Bill; Fitzgerald, Pat; Roper, Dan; and Takaki, Min, 5,703,599, Cl. 342-368.000.
Roquette Freres: *See*—

Dehennau, Claude; Depireux, Thierry; Fleche, Guy; Gosset, Serge; and Videau, Didier, 5,703,160, Cl. 525-54.240.
Rosati, Robert L.: *See—*
Cameron, Kimberly O.; Dasilva-Jardine, Paul A.; and Rosati, Robert L., 5,703,108, Cl. 514-382.000.
Rösch, Norbert; and Wegener, Peter. Silane couplers containing cyclic structural elements as alignment films. 5,702,777, Cl. 428-1.000.
Rösch, Norbert: *See—*
Escher, Claus; Harada, Takamasa; Illian, Gerhard; Rösch, Norbert; and Wingen, Rainer, 5,702,639, Cl. 252-299.000.
Rösch, Wolfgang; Sohn, Erich; Bauer, Klaus; and Bieringer, Hermann, to Hoechst Aktiengesellschaft. Pyrazolines for protecting crop plants against herbicides. 5,703,008, Cl. 504-106.000.
Rose, Jed E.; and Levin, Edward D., to Schaap, Robert J. Agonist-antagonist combination to reduce the use of nicotine and other drugs. 5,703,101, Cl. 514-343.000.
Rosemount Inc.: *See—*
Kirkpatrick, William R., 5,703,575, Cl. 340-870.170.
Rosen, Arnold M., to Park Plus Corporation. Electrically driven car lift apparatus for home use. 5,702,222, Cl. 414-228.000.
Rosen, Marvin E.: *See—*
Larson, Carl O., Jr.; Smith, James S.; Chapman, John H.; Slimon, Scot A.; John, Trahan D.; Robert, J. Brozek; Franco, Alberto; McGarvey, John J.; Rosen, Marvin E.; and Pasque, Michael K., 5,702,430, Cl. 607-1.000.
Rosen, Robert K.; and Kolthammer, Brian W.S., to Dow Chemical Company, The. Synthesis of cyclopentadienyl metal coordination complexes from metal hydrocarbyloxides. 5,703,257, Cl. 556-7.000.
Rosen, Sholom S., to Citibank, N.A. Method for establishing secure communications among processing devices. 5,703,949, Cl. 380-21.000.
Rosenberg, Ronald Owen; Singh, Ajaib; Maupin, Christopher James; and Lombardo, Brian Scott, to Uniroyal Chemical Company, Inc. Removal of unreacted diisocyanate monomer from polyurethane prepolymers. 5,703,193, Cl. 528-44.000.
Rosenquist, Terry L. Load-bearing scaffold for beds and the like. 5,701,616, Cl. 5-8.000.
Rosenthal, Arnon, to Genentech, Inc. Antibodies to neurotrophic factor-4 (NT-4). 5,702,906, Cl. 435-7.100.
Rosenthal, Robert D., to Futrex, Inc. Method and apparatus for near-infrared quantitative analysis. 5,703,364, Cl. 250-339.120.
Ross, Bruce Douglas: *See—*
Father, Richard M.; and Ross, Bruce Douglas, 5,701,921, Cl. 132-309.000.
Rossman, Michael D.: *See—*
Moradi, Mohammad A.; Rossman, Michael D.; LaBell, Larry; and Holz, Bonita, 5,703,796, Cl. 364-563.000.
Rossteuscher, Gerhard, to Hofmann Werkstatt-Technik GmbH. Power clamping system for mounting/securing of automotive wheel assemblies onto wheel balancing machines. 5,703,291, Cl. 73-487.000.
Röstlund, Tord: *See—*
Albrektsson, Björn; Carlsson, Lars; Jacobsson, Magnus; Röstlund, Tord; and Wennberg, Stig, 5,702,473, Cl. 623-22.000.
Roth, Douglas Duane: *See—*
Jester, Randy Douglas; Penoyer, John Arthur; Roth, Douglas Duane; Frank, Detlef; Onodera, Minoru; Tsudaka, Takeichi; Sato, Toshiaki; and Moritani, Tohei, 5,703,202, Cl. 528-481.000.
Roth, Francis A.: *See—*
Bar-Or, David; Kimmel, James S.; and Roth, Francis A., 5,702,351, Cl. 600-190.000.
Roth, Steve; and Kennedy, Thomas A., to Hughes Electronics. Detecting active emitters using scan rate correlation of tracking receiver and radar data. 5,703,590, Cl. 342-13.000.
Rothgery, Eugene F.; and Seefried, Carl G., Jr., to Olin Corporation. Pyridine and pyridone stabilizers for hydroxylammonium nitrate and hydroxylamine-containing compositions. 5,703,323, Cl. 149-88.000.
Rotzinger, Bruno; Schmutz, Thomas; Brunner, Martin; and Stauffer, Werner, to Ciba Specialty Chemicals Corporation. Process for the preparation of stabilized olefin polymers. 5,703,149, Cl. 524-116.000.
Roulinson, Daniel A.: *See—*
Branik, David P.; Roulinson, Daniel A.; and Umin, Gerald L., 5,701,737, Cl. 60-299.000.
Roux, Christian: *See—*
Geyer, Freddy; Vezain, Gérard; and Roux, Christian, 5,702,069, Cl. 244-161.000.
Rovera, Giovanni: *See—*
Santoli, Daniela; Rovera, Giovanni; and Cesano, Alessandra, 5,702,702, Cl. 424-93.710.
Rowley, David C.: *See—*
Semple, Joseph Edward; Ardecky, Robert John; Nutt, Ruth Foelsche; Ripka, William Charles; Rowley, David C.; Lim-Wilby, Marguerita S. L.; and Brunck, Terence Kevin, 5,703,208, Cl. 530-331.000.
Rubinet Faucet Company, The: *See—*
Luisi, Domenic, 5,701,926, Cl. 137-218.000.
Rudigier, Jürgen: *See—*
Grundei, Hans; Rudigier, Jürgen; and Weber, Christian, 5,702,471, Cl. 623-21.000.
Rueff, John Robert: *See—*
Buck, Keith Evan; Farrar, David John; Harvey, Robert Joseph; Litwak, Philip; and Rueff, John Robert, 5,701,919, Cl. 128-898.000.
Ruess, Philip G.: *See—*
Gottlieb, Robert K.; Grossman, Richard A.; Ifkovits, Michael R.; and Ruess, Philip G., 5,702,098, Cl. 270-58.060.
Rufo, George, Jr.: *See—*
O'Brien, Patrick J.; Thomas, Alvin; Rufo, George, Jr.; Durham, Larry; and Gelardi, Anthony L., 5,701,997, Cl. 206-308.100.
Rupe, Danny L., to Alpine Engineered Products, Inc. Method of assembling a box spring frame. 5,701,653, Cl. 29-432.000.
Rupp, Garry E.: *See—*
Sasamine, Kazuo; and Rupp, Garry E., 5,701,911, Cl. 128-772.000.
Ruptured and Crippled Maintaining The Hospital for Special Surgery, New York Society for The: *See—*
Burstein, Albert H.; and Bartel, Donald L., 5,702,458, Cl. 623-20.000.
Rus, Liviu: *See—*
Fowler, Thomas J.; and Rus, Liviu, 5,702,145, Cl. 296-66.000.
Ruse, James: *See—*
Boddy, Ian; Potts, Matthew D.; Foote, Keith D.; and Ruse, James, 5,703,732, Cl. 359-841.000.
Rushing, Douglas A.: *See—*
Simmons, Scott C.; Pohl, John R.; Guess, Terrell M.; Rushing, Douglas A.; Caputo, Michael P., Jr.; and Billica, Roger D., 5,701,904, Cl. 128-670.000.
Russell, Douglas R. Handheld gaming ball display device. 5,702,101, Cl. 273-144.00B.
Russell, Robert L. Modular valve assembly. 5,701,930, Cl. 137-454.500.
Russell, Timothy M., to Frye Electronics, Inc. Method and apparatus for testing acoustical devices, including hearing aids and the like. 5,703,797, Cl. 364-576.000.
Russell, William E.; Hall, Barrie G.; and Medeiros, Fernando, to Moore Company, The. Container and method for relaxing snags during dispensement of strip material. 5,702,001, Cl. 206-388.000.
Rustad, Andre M.; and Davison, Paul O., to Baxter International Inc. Breathing circuit heating element retainer. 5,701,887, Cl. 128-204.170.
Rutgers University: *See—*
Mammone, Richard J.; Farrell, Kevin; and Freeman, Brian, 5,703,908, Cl. 375-278.000.
Ruther, Michael: *See—*
Petersen, Uwe; Ruther, Michael; Schenke, Thomas; Bremm, Klaus Dieter; and Endermann, Rainer, 5,703,094, Cl. 514-312.000.
Ryan, Bruce M.: *See—*
Karunasiri, Tissa R.; Bell, David A.; and Ryan, Bruce M., 5,703,464, Cl. 320-19.000.
Ryan, Carl R.: *See—*
Chun, Christopher K. Y.; Shook, Stephen G.; and Ryan, Carl R., 5,703,504, Cl. 327-72.000.
Ryan, John J., III: *See—*
Williamson, Dan; Mills, James A.; and Ryan, John J., III, 5,701,957, Cl. 166-297.000.
Ryan, Robert R.: *See—*
Smith, Paul H.; Brainard, James R.; Jarvinen, Gordon D.; and Ryan, Robert R., 5,702,683, Cl. 424-9.361.
Ryatt, Sadie. Treatment non-rebreather assembly and method for delivering oxygen and medication. 5,701,886, Cl. 128-203.120.
Rykken, Oddvin: *See—*
Mengshoel, Hans Chr.; and Rykken, Oddvin, 5,702,158, Cl. 297-445.100.
Ryobi Limited: *See—*
Kurihara, Katsumi; Kawamoto, Shiro; Nemazi, John E.; and Conger, William G., 5,701,855, Cl. 123-73.0AD.
Ryoden Semiconductor System Engineering Corporation: *See—*
Sakata, Hirofumi; and Nishioka, Tadashi, 5,702,849, Cl. 430-5.000.
Ryoke, Katsumi: *See—*
Mihayashi, Keiji; and Ryoke, Katsumi, 5,702,800, Cl. 428-144.000.
Ryosei Electro-Circuit Systems, Ltd.: *See—*
Machida, Yukihumi, 5,702,272, Cl. 439-843.000.
Ryu, Myung Sun, to Hyundai Electronics Industries Co., Ltd. Multi-bit data output buffer for semiconductor memory device. 5,703,812, Cl. 365-189.090.
Sa, Yong-Jae, to Daewoo Electronics Co., Ltd. Steam pressure rice cooker with an auxiliary steam pressure exhausting device. 5,701,805, Cl. 99-331.000.
Saaski, Elric W.; and Lawrence, Dale M., to Research International, Inc. Methods for manufacturing a flow switch. 5,702,618, Cl. 216-2.000.
Saba, Hayato: *See—*
Yamamoto, Keisaku; Wakatsuki, Kizuku; and Saba, Hayato, 5,703,151, Cl. 524-262.000.
Sabatini, Massimo: *See—*
Wierzbicki, Michel; Sauveur, Frédéric; Boussard, Marie-Francoise; Bonnet, Jacqueline; and Sabatini, Massimo, 5,703,074, Cl. 514-231.500.
Sabin, Gregory D., to Intel Corporation. Method and apparatus for limiting the slew rate of output drivers by selectively programming the threshold voltage of flash cells connected thereto. 5,703,496, Cl. 326-27.000.
Sacchettini, James; Blanchard, John; and Jacobs, William R., Jr., to Albert Einstein College of Medicine of Yeshiva University, a Division of Yeshiva University. Method and compounds for inhibiting lipid biosynthesis of bacteria and plants. 5,702,935, Cl. 435-193.000.
Sadler, John: *See—*
Webster, Craig; and Sadler, John, 5,701,632, Cl. 15-330.000.
Sadvary, Richard J.: *See—*
Swarup, Shanti; and Sadvary, Richard J., 5,703,155, Cl. 524-558.000.
Saegusa, Koichiro: *See—*

Okuma, Kiyoshi; Saegusa, Koichiro; and Shiono, Ryozo, 5,702,556, Cl. 156-261.000.
Saeki, Yasuhiro: *See—*
Hosoi, Masahiro; Saito, Yasuhiko; Saeki, Yasuhiro; and Etchu, Masami, 5,702,794, Cl. 428-65.300.
Saenger, Katherine Lynn; and Kotecki, David Edward, to International Business Machines Corporation. Method for making an isolated sidewall capacitor having a compound plate electrode. 5,701,647, Cl. 29-25.420.
SAFT: *See—*
Bernard, Patrick; Lecerf, André; Senyarich, Stéphane; and Audry, Claudette, 5,702,844, Cl. 429-223.000.
Sagawa, Akemi; Sakai, Masahiko; Ebata, Michio; and Itoh, Ren, to Hitachi Koki Co., Ltd. Hot melt type ink composition for ink jet. 5,703,145, Cl. 523-161.000.
Sagenmüller, Alfons; Schubert, Hans-Herbert; Uzawa, Shigeru; and Saito, Kenichi, to Hoechst Schering AgrEvo GmbH. Synergistic combinations of ammonium salts. 5,703,132, Cl. 514-643.000.
Sager, Ottmar: *See—*
Vry, Uwe; Sager, Ottmar; Strähle, Fritz; and Poxleitner, Martin, 5,702,350, Cl. 600-166.000.
Saggar, Rahul. Expandable prosthesis for spinal fusion. 5,702,455, Cl. 623-17.000.
Sagisaka, Yasuo; and Hirata, Yoshihiko, to Denso Corporation. Malfunction diagnosis device for engine speed controller. 5,701,866, Cl. 123-339.150.
Sahashi, Masashi: *See—*
Iwasaki, Hitoshi; Ohsawa, Yuichi; Kondoh, Reiko; Hashimoto, Susumu; Sawabe, Atsuhito; Kamiguchi, Yuzo; and Sahashi, Masashi, 5,702,832, Cl. 428-611.000.
Sahasi, Masahiko: *See—*
Kozakai, Motokazu; Aoyama, Kunitoshi; and Sahasi, Masahiko, 5,702,053, Cl. 229-87.020.
Sahinalp, Suleyman Cenk: *See—*
Matias, Yossi; and Sahinalp, Suleyman Cenk, 5,703,581, Cl. 341-67.000.
Saida, Kazunori: *See—*
Yamaguchi, Hiroyuki; Naito, Masayuki; Inayoshi, Satoshi; Doi, Nobuyuki; Saida, Kazunori; and Sumiya, Yasuhiko, 5,701,949, Cl. 165-42.000.
Saigo, Tsutomu: *See—*
Arai, Youichi; O'Toole, Brendan; Saigo, Tsutomu; Shimoyama, Kenichi; Kumagai, Ryo; and Takada, Yoshihide, 5,703,486, Cl. 324-427.000.
Saijyo, Yoshio: *See—*
Ishida, Naruo; Saijyo, Yoshio; Arakawa, Shingo; Watanabe, Kimiaki; and Inaba, Hidehiro, 5,703,295, Cl. 73-593.000.
Saika, Toshihiro; Mizutani, Hidemasa; Kaifu, Noriyuki; and Kameshima, Toshio, to Canon Kabushiki Kaisha. Electroluminescent device for illuminating a liquid crystal display. 5,703,666, Cl. 349-61.000.
Saimatec Engineering Oy: *See—*
Rasimus, Seppo; and Tolvanen, Heikki, 5,702,183, Cl. 366-195.000.
Saint-Gobain/Norton Industrial Ceramics Corp.: *See—*
Dynan, Stephen; Shindle, Jack; and Vayda, John, 5,702,997, Cl. 501-88.000.
Saito, Akio: *See—*
Arashima, Teruo; Kimura, Makiko; Kashino, Toshio; Sugitani, Hiroshi; Hattori, Yoshifumi; Ikeda, Masami; Saito, Asao; Masuda, Kazuaki; Saito, Akio; and Orikasa, Tsuyoshi, 5,703,632, Cl. 347-47.000.
Saito, Akiya: *See—*
Mitchell, Michael L.; Fite, Barry Alan; Saito, Akiya; and New, Anthony C., 5,703,858, Cl. 369-58.000.
Saito, Asao: *See—*
Arashima, Teruo; Kimura, Makiko; Kashino, Toshio; Sugitani, Hiroshi; Hattori, Yoshifumi; Ikeda, Masami; Saito, Asao; Masuda, Kazuaki; Saito, Akio; and Orikasa, Tsuyoshi, 5,703,632, Cl. 347-47.000.
Saito, Atsushi; and Sugiyama, Hisataka, to Hitachi, Ltd. Optical disk tracking control method, optical disk device, and optical disk with increased recording density. 5,703,846, Cl. 369-44.260.
Saito, Atsushi: *See—*
Kirino, Fumiyoshi; Toda, Tsuyoshi; Ide, Horishi; Sugiyama, Hisataka; Saito, Atsushi; Tsuchinaga, Hiroyuki; Maeda, Takeshi; Kugiya, Fumio; Kaku, Toshimitsu; Mita, Seiichi; Shigematsu, Kazuo; and Ouchi, Yasuhide, 5,703,855, Cl. 369-54.000.
Saito, Hirokazu; and Tada, Sugihiko, to Fuji Photo Film Co., Ltd. Method of producing a silver halide photographic emulsion, apparatus for the same, method of measuring a silver or halogen ion concentration and an apparatus for the same. 5,702,851, Cl. 430-30.000.
Saito, Hiroshi, to Amada Metrecs Company, Limited. Upper tool for a press. 5,701,790, Cl. 83-140.000.
Saito, Kenichi: *See—*
Sagenmüller, Alfons; Schubert, Hans-Herbert; Uzawa, Shigeru; and Saito, Kenichi, 5,703,132, Cl. 514-643.000.
Saito, Norio: *See—*
Osada, Takayuki; Tsuda, Fumishiro; Saito, Norio; Ihara, Takeji; Wagatsuma, Yoshio; and Moriya, Hitoshi, 5,703,557, Cl. 336-92.000.
Saito, Yasuhiko: *See—*
Hosoi, Masahiro; Saito, Yasuhiko; Saeki, Yasuhiro; and Etchu, Masami, 5,702,794, Cl. 428-65.300.
Saito, Yasushi: *See—*
Matsumoto, Masashi; Saito, Yasushi; Ichihashi, Takao; and Yamada, Shuji, 5,703,888, Cl. 371-51.100.
Sato, Yuzo; Kaneko, Katsumi; and Saito, Yasushi, 5,703,530, Cl. 330-149.000.
Saitoh, Shinichi: *See—*
Hayakawa, Yuuichi; Saitoh, Shinichi; Matsuzaki, Isao; and Kayama, Masayoshi, 5,703,739, Cl. 360-121.000.
Saj, Chester Frank: *See—*
Steigerwald, Robert Louis; Saj, Chester Frank; and Stevanovic, Ljubisa Dragoljub, 5,703,441, Cl. 315-307.000.
Saka, Yuuji: *See—*
Onizuka, Takahiro; and Saka, Yuuji, 5,703,746, Cl. 361-106.000.
Sakabe, Yukio: *See—*
Nakayama, Akinori; Ishikawa, Terunobi; Takagi, Hiroshi; and Sakabe, Yukio, 5,703,000, Cl. 501-152.000.
Sakai, Kouichi; Oumi, Hayato; and Suzuki, Hiroshi, to NSK, Ltd. Autotensioner. 5,702,315, Cl. 474-94.000.
Sakai, Kouichi: *See—*
Yoshida, Satoshi; Yanagi, Hideki; Sakai, Kouichi; and Nawa, Masayoshi, 5,702,510, Cl. 106-31.600.
Sakai, Masahiko: *See—*
Sagawa, Akemi; Sakai, Masahiko; Ebata, Michio; and Itoh, Ren, 5,703,145, Cl. 523-161.000.
Sakai, Masanori; Kadowaki, Toshihiro; Arakawa, Naoto; and Ohnishi, Tetsuya, to Canon Kabushiki Kaisha. Image memory apparatus. 5,703,696, Cl. 358-404.000.
Sakai, Toshikazu: *See—*
Kamata, Shigeto; and Sakai, Toshikazu, 5,703,420, Cl. 310-54.000.
Sakaki, Junichi: *See—*
Frûh, Thomas; Pitterna, Thomas; Murata, Toshiki; Svensson, Lene D.; Yuumoto, Yoko; and Sakaki, Junichi, 5,703,106, Cl. 514-378.000.
Sakakibara, Keisuke; Murasaki, Ryuichi; Daijyogo, Shinichi; and Minato, Tsuyoshi, to YKK Corporation. Molded surface fastener and method for manufacturing the same. 5,702,797, Cl. 428-100.000.
Sakakima, Hiroshi; Satomi, Mitsuo; and Takeuchi, Hiroshi, to Matsushita Electric Industrial Co., Ltd. Magneto-resistance effect element. 5,702,834, Cl. 428-692.000.
Sakamoto, Kiyoshi: *See—*
Perregaard, Jens Kristian; Moltzen, Ejner Knud; Andersen, Kim; Pedersen, Henrik; Bøgesø, Klaus Peter; Pernet, Andre; Bopp, Barbara; Mulford, Darcy; and Sakamoto, Kiyoshi, 5,703,087, Cl. 514-278.000.
Sakamoto, Yoshio, to Kabushiki Kaisha Kenwood. Method of manufacturing a repulsion magnetic circuit type loudspeaker. 5,701,657, Cl. 29-594.000.
Sakase Adteck Co.: *See—*
Kubomura, Kenji; Kimura, Hiromi; and Shibata, Hirotaka, 5,702,993, Cl. 442-204.000.
Sakashita, Kazuhiro: *See—*
Hashizume, Takeshi; and Sakashita, Kazuhiro, 5,703,513, Cl. 327-202.000.
Sakata, Hirofumi; and Nishioka, Tadashi, to Mitsubishi Denki Kabushiki Kaisha; and Ryoden Semiconductor System Engineering Corporation. Mask for transferring a pattern for use in a semiconductor device and method of manufacturing the same. 5,702,849, Cl. 430-5.000.
Sakata, Kazuyuki: *See—*
Yamasaki, Kazuyuki; Kataoka, Masaki; Sakata, Kazuyuki; and Imazu, Shirou, 5,702,594, Cl. 210-151.000.
Sakauchi, Kazuo; Hirano, Yoshihiro; and Uchikawa, Akira, to SEH America, Inc. Method of operating a growing hall containing puller cells. 5,702,522, Cl. 117-2.000.
Sakoda, Hideharu: *See—*
Sono, Michio; Tsuji, Kazuto; Sakoda, Hideharu; Suzuki, Yoshimi; and Sakuma, Masao, 5,703,398, Cl. 257-706.000.
Sakon, Yohta: *See—*
Nagai, Kazukiyo; Adachi, Chihaya; Tamoto, Nozomu; and Sakon, Yohta, 5,702,833, Cl. 428-690.000.
Saksena, Anil K.; Girijavallabhan, Viyyoor M.; Lovey, Raymond G.; Pike, Russell E.; Wang, Haiyan; Liu, Yi-Tsung; Ganguly, Ashit K.; and Bennett, Frank, to Schering Corporation. Tetrahydrofuran antifungals. 5,703,079, Cl. 514-252.000.
Saksena, Anil K.; Girijavallabhan, Viyyoor M.; Lovey, Raymond G.; Pike, Russell E.; Wang, Haiyan; Liu, Yi-Tsung; Ganguly, Ashit K.; and Bennett, Frank, to Schering Corporation. Tetrahydrofuran antifungals. 5,703,236, Cl. 544-366.000.
Sakuma, Masao: *See—*
Sono, Michio; Tsuji, Kazuto; Sakoda, Hideharu; Suzuki, Yoshimi; and Sakuma, Masao, 5,703,398, Cl. 257-706.000.
Salatas, Kathy: *See—*
Carlson, William C.; Hartle, Jeffrey E.; Salatas, Kathy; Harris, Amy; and Littke, Willis R., 5,701,699, Cl. 47-57.600.
Salgat, Mark T.: *See—*
McKibben, Kenneth D.; Gould, Alan P.; Wuepper, Thomas E.; Minor, Daniel D.; Salgat, Mark T.; Marthaler, David; Speaks, Jackie M.; Macheske, Robert L.; Good, David; Gillette, Richard A.; Bond, Philip L.; Coyle, Donald C.; Rentfrow, Darrell; Stiens, Thomas O.; and Stevens, Larry M., 5,701,945, Cl. 164-130.000.
Saling, Peter: *See—*
Schefczik, Ernst; Grüttner-Merten, Sabine; Saling, Peter; Sens, Rüdiger; and Reichelt, Helmut, 5,703,238, Cl. 546-119.000.
Salituro, Francesco G.; and Baron, Bruce M., to Merrell Pharmaceuticals Inc. 3-aminoindolyl derivatives. 5,703,107, Cl. 514-381.000.
Salk Institute for Biological Studies, The: *See—*
Evans, Ronald M.; and Ogura, Toshihiko, 5,702,914, Cl. 435-29.000.
Saller, Louis Richard: *See—*
Metzler, Michael Eugene; and Saller, Louis Richard, 5,702,342, Cl. 600-25.000.

Salley, Sybil. Game board having mechanical characters. 5,702,103, Cl. 273-243.000.
Salmon, Michael E.; and Pankey, Brent W., to Nu-Tech & Engineering, Inc. Illuminated pointer for an analog gauge and related method of use and manufacture. 5,703,612, Cl. 345-75.000.
Salomon S.A.: *See—*
Challande, Christian; Desarmaux, Pierre; and Thomas, Pascal, 5,702,119, Cl. 280-625.000.
Salonen, Jarmo Sakari: *See—*
Karjalainen, Arto Johannes; Södervall, Maria-Liisa; Kalapudas, Arja Marketta; Pelkonen, Reino Olavi; Laine, Aire Maria; Lammintausta, Risto Arvo Sakari; and Salonen, Jarmo Sakari, 5,703,109, Cl. 514-383.000.
Saltzman, Jeremy, to Dictahone Corporation. Voice dictation consulting system and method. 5,703,937, Cl. 379-88.000.
Salugsugan, Isidore; and Schonauer, Diana M., to Advanced Micro Devices, Inc. Reduced chemical-mechanical polishing particulate contamination. 5,702,563, Cl. 156-636.100.
Salz, Ulrich: *See—*
Rheinberger, Volker; Moszner, Norbert; Salz, Ulrich; and Voelkel, Thomas, 5,703,249, Cl. 549-337.000.
Sames S.A.: *See—*
Burtin, Jean Pierre; Dobrowolski, Flavien; and Thome, Caryl, 5,703,770, Cl. 363-61.000.
Samson, Gene, to Target Therapeutics, Inc. Composite super-elastic alloy braid reinforced catheter. 5,702,373, Cl. 604-282.000.
Samsung Display Devices Co., Ltd.: *See—*
Choi, Sung-lim; and An, Kwang-jin, 5,702,871, Cl. 430-314.000.
Jeong, Bong-kwon, 5,703,432, Cl. 313-461.000.
Kim, Chang-seob; Son, Seok-bong; Kim, Sang-kyun; and Jeong, Bong-uk, 5,703,429, Cl. 313-346.00R.
Samsung Elecrtronics Co., Ltd.: *See—*
Ko, Jung-wan, 5,703,580, Cl. 341-59.000.
Samsung Electro-Mechanics Co., Ltd.: *See—*
Kim, In-eung; and Choukh, Alexandre M., 5,703,738, Cl. 360-113.000.
Woo, Suk Ha, 5,703,752, Cl. 361-704.000.
Samsung Electronics Co., Ltd.: *See—*
An, Jong Tae, 5,703,453, Cl. 318-625.000.
Kim, Gyung-Yeol, 5,704,023, Cl. 395-114.000.
Kim, Sung-Hyun, 5,703,699, Cl. 358-442.000.
Kim, Yong-ho; Lee, Young-sik; and Chun, Hee, 5,703,750, Cl. 361-187.000.
Kwon, Joong-Yeol, 5,703,443, Cl. 315-370.000.
Lee, Chul-woo; and Yoo, Jang-hoon, 5,703,862, Cl. 369-112.000.
Lee, Jong-Chan, 5,702,064, Cl. 242-338.400.
Lee, Kang-yoon, 5,702,969, Cl. 437-52.000.
Lee, Kyu-Chan; and Sim, Jai-Hoon, 5,703,475, Cl. 323-313.000.
Moon, Kyusun, 5,702,960, Cl. 437-40.TFT.
Nam, Hyo-Yun; and Suh, Young-Ho, 5,703,816, Cl. 365-200.000.
Oh, Seung-Hun; Doh, Gyun-Hae; and Kang, Sun-Woong, 5,702,497, Cl. 65-412.000.
Park, Jae-Hong, 5,702,961, Cl. 437-40.000.
Shin, Hyun-Doo; Jo, Sung-O; and Nahm, Eon-Ju, 5,701,624, Cl. 8-139.000.
Yomoda, Kenju, 5,703,730, Cl. 359-824.000.
Yoon, Hyung-su, 5,703,662, Cl. 348-728.000.
Samsung Electronocs Co., Ltd.: *See—*
Yoo, Seung-Moon; and Yoo, Jei-Hwon, 5,703,811, Cl. 365-189.050.
Sanberg, Paul R.; Cameron, Don F.; and Borlongan, Cesario V., to University of South Florida. Sertoli cells as neurorecovery inducing cells for Parkinson's disease. 5,702,700, Cl. 424-93.100.
Sanchez, Manuel: *See—*
Jayasuriya, Hiranthi; Lingham, Russell B.; Pelaez, Fernando; Sanchez, Manuel; Silverman, Keith C.; Singh, Sheo Bux; and Zink, Deborah L., 5,703,067, Cl. 514-179.000.
Sandberg, Jonathan S.: *See—*
Lopresti, Daniel P.; Korth, Henry F.; Sandberg, Jonathan S.; and Lipton, Richard J., 5,703,972, Cl. 382-310.000.
Sanden Corporation: *See—*
Matsumoto, Takayuki; Matsumoto, Yasuomi; and Fujita, Hiroshi, 5,702,241, Cl. 418-55.400.
Sander, Ulrich: *See—*
Hillrichs, Eilhard; Kienberger, Manfred; and Sander, Ulrich, 5,702,585, Cl. 205-468.000.
Sanders, James F.: *See—*
Pellerite, Mark J.; Rich, Larry D.; and Sanders, James F., 5,702,509, Cl. 106-2.000.
Sandhu, Gurpreet S.; and Kline, Bruce C., to Chiron Diagnostics Corporation. Nucleic acid probes for the detection and identification of fungi. 5,702,889, Cl. 435-6.000.
Sandia Corporation: *See—*
Drumheller, Douglas S., 5,703,836, Cl. 367-165.000.
Nilsen, Curt A., 5,703,562, Cl. 340-286.020.
Shepodd, Timothy J.; and Phillip, Bradley L., 5,703,378, Cl. 252-182.120.
Sando, Mutsuo: *See—*
Towata, Atsuya; and Sando, Mutsuo, 5,703,002, Cl. 502-350.000.
Sandvik AB: *See—*
Ljungberg, Björn, 5,702,808, Cl. 428-216.000.
Sandvik Sorting Systems, Inc.: *See—*
Boone, Joseph T.; Hillerich, Thomas Anthony, Jr.; Grispart, Gerald Robert; and Ydoate, Edward, 5,701,989, Cl. 198-448.000.
Saner, Niklaus: *See—*
Mallah, Mohamad; Linn, Horst; Saner, Niklaus; and Voirol, Peter, 5,703,343, Cl. 219-687.000.
Sankyo Company, Limited: *See—*
Yanagisawa, Hiroaki; Fujita, Takashi; Fujimoto, Koichi; Yoshioka, Takao; Wada, Kunio; Oguchi, Minoru; Fujiwara, Toshihiko; and Horikoshi, Hiroyoshi, 5,703,096, Cl. 514-326.000.
Yokoi, Shinji; Nishida, Akira; Obata, Tokio; and Goka, Kouichi, 5,703,064, Cl. 514-80.000.
Sankyo Seiki Mfg. Co., Ltd.: *See—*
Isaka, Akihiko, 5,703,305, Cl. 84-95.100.
Sannel, Benjamin H.: *See—*
Lundstrom, Robert W.; McCumber, Roger D.; and Sannel, Benjamin H., 5,701,727, Cl. 53-569.000.
Sano, Akihiro, to Kabushiki Kaisha Toshiba. Ultrasonic diagnosis apparatus and image displaying system. 5,701,897, Cl. 128-661.090.
Sano, Hiroshi; and Adachi, Rensuke, to Asahi Kogaku Kogyo Kabushiki Kaisha. Fluoroscopic apparatus. 5,701,903, Cl. 128-665.000.
Sano, Kunio, to Tokyo Electron Limited. Probing test apparatus. 5,703,494, Cl. 324-761.000.
Sano, Shigeaki: *See—*
Yamada, Yosuke; Sano, Shigeaki; Yoshida, Toshiji; and Kagitani, Toshio, 5,702,664, Cl. 264-515.000.
Sanshin Kogyo Kabushiki Kaisha: *See—*
Kaku, Junichi; and Yamada, Masaichi, 5,701,872, Cl. 123-495.000.
Nakase, Ryoichi; Ozawa, Shigeyuki; Fujimoto, Hiroaki; and Suzuki, Takehisa, 5,702,276, Cl. 440-89.000.
Sant, David M.: *See—*
De Monbrun, Michael A.; De Monbrun, Dianne L.; Sant, Jammie; and Sant, David M., 5,702,330, Cl. 482-105.000.
Sant, Jammie: *See—*
De Monbrun, Michael A.; De Monbrun, Dianne L.; Sant, Jammie; and Sant, David M., 5,702,330, Cl. 482-105.000.
Santhanam, Vatsa, to Hewlett-Packard Company. Efficient explicit data prefetching analysis and code generation in a low-level optimizer for inserting prefetch instructions into loops of applications. 5,704,053, Cl. 284-383.000.
Santin, Giovanni: *See—*
Smayling, Michael C.; Santin, Giovanni; and Marotta, Giulio, 5,703,807, Cl. 365-185.030.
Santoli, Daniela; Rovera, Giovanni; and Cesano, Alessandra, to Wistar Institute of Anatomy and Biology, The. Modified cytotoxic tall cell line and compositions and methods for manufacture and use thereof as therapeutic reagents for cancer. 5,702,702, Cl. 424-93.710.
Sanyo Chemical Industries, Ltd.: *See—*
Hatanaka, Katsuyuki, 5,702,605, Cl. 210-632.000.
Sanyo Electric Co., Ltd.: *See—*
Baba, Yoshitaka; Tadokoro, Motoo; and Yamawaki, Akifumi, 5,702,762, Cl. 427-212.000.
Watanabe, Tohru, 5,703,641, Cl. 348-274.000.
Sarcos, Inc.: *See—*
Jacobsen, Stephen C.; and Davis, Clark C., 5,703,422, Cl. 310-82.000.
Sard, Howard P.: *See—*
Sharpe, Richard J.; Arndt, Kenneth A.; Galli, Stephen J.; Meltzer, Peter C.; Razdan, Raj K.; and Sard, Howard P., 5,703,088, Cl. 514-278.000.
Sarfert, Andreas: *See—*
Adamek, Wolfgang; Kretschmer, Horst; Entrup, Hubert Grosse; Nienhaus, Clemens; Herchenbach, Paul; Sarfert, Andreas; Kämpf, Klaus; and Schott, Wilhelm, 5,702,306, Cl. 464-172.000.
Sari, Osman; and Blank, Helmut, to Pierburg AG. Balanced valve control member for exhaust gas recycling. 5,701,874, Cl. 123-571.000.
Särkkä, Veli-Matti, to Nokia Telecommunications Oy. Dielectric resonator having adjustment plates movable with respect to resonator disc and each other. 5,703,548, Cl. 333-235.000.
Sartore, Richard G., to United States of America, Army. Circuit scanning device and method. 5,703,361, Cl. 250-310.000.
Sartwell, Alfred Leonard; and Thoma, Endre Philip, to International Business Machines Corporation. Data output impedance control. 5,703,495, Cl. 324-763.000.
Sarver, David; D'Alessio, Keith; and D'Alessio, Raymond A., to United States Surgical Corporation; and Biomet, Inc. Process for making polymeric articles. 5,702,656, Cl. 264-102.000.
Sasahara, Kazunori: *See—*
Yokoshima, Minoru; Ohkubo, Tetsuo; Sasahara, Kazunori; Sato, Yoneji; and Baba, Yoko, 5,702,820, Cl. 428-413.000.
Sasaki, Hiroto: *See—*
Adachi, Mitsuru; Sasaki, Hiroto; and Sato, Satoru, 5,701,942, Cl. 164-71.100.
Sasaki, Kazuya: *See—*
Takahashi, Hiroyuki; Hamada, Makoto; Fujishima, Hiromichi; Naito, Masaaki; Sasaki, Kazuya; Tsuchiya, Jiro; and Maeda, Tomoharu, 5,702,123, Cl. 280-735.000.
Sasaki, Makoto; and Sato, Hisatake, to Nippon Oil Company, Ltd. Fluid having both magnetic and electrorheological characteristics. 5,702,630, Cl. 252-62.520.
Sasaki, Naotaka; Sugaya, Kenju; and Nakahashi, Fumio, to Japan Servo Co., Ltd. Thermal transfer color recording device. 5,703,635, Cl. 347-176.000.

Sasaki, Tatsuya; and Takeuchi, Takeshi, to NEC Corporation. Semiconductor photonic integrated circuit and fabrication process therefor. 5,703,974, Cl. 385-14.000.
Sasamine, Kazuo; and Rupp, Garry E., to Medtronic, Inc. Guide wire extension docking system. 5,701,911, Cl. 128-772.000.
Sasib S.p.A.: *See—*
Spada, Valter, 5,701,718, Cl. 53-201.000.
Sasse, Klaus: *See—*
Heuer, Lutz; Wachtler, Peter; Kugler, Martin; Schrage, Heinrich; and Sasse, Klaus, 5,703,103, Cl. 514-365.000.
Satake, Masaki: *See—*
Murayama, Yuichiro; Satake, Masaki; Hashimoto, Hiroshi; and Okita, Tsutomu, 5,702,821, Cl. 428-425.900.
SatCon Technology, Corp.: *See—*
Bushko, Dariusz Antoni; Avakian, Kevin Michael; Johnson, Bruce Graham; and Gerver, Michael Jonathan, 5,703,553, Cl. 335-215.000.
Satelec S.A.: *See—*
Dieras, Francis; and Billard, Jean-Luc, 5,702,360, Cl. 604-22.000.
Sato, Akihiko; Mizutani, Kenzo; Kawabata, Masami; and Sumiyoshi, Iwao, to Nippon Paint Co. Ltd. Photosensitive composition for volume hologram recording. 5,702,846, Cl. 430-2.000.
Sato, Hirofumi: *See—*
Nonaka, Tsutomu; Naoe, Toshiyuki; Sato, Hirofumi; Nishimura, Toshihiko; and Suzuki, Naohisa, 5,703,579, Cl. 341-50.000.
Sato, Hisatake: *See—*
Sasaki, Makoto; and Sato, Hisatake, 5,702,630, Cl. 252-62.520.
Sato, Kazuhiko: *See—*
Eckels, Phillip William; Sato, Kazuhiko; Woods, Daniel Christian; Ward, Granville Geer; Hayworth, Gregory Farin; and King, Christopher G., 5,701,744, Cl. 62-47.100.
Sato, Satoru: *See—*
Adachi, Mitsuru; Sasaki, Hiroto; and Sato, Satoru, 5,701,942, Cl. 164-71.100.
Sato, Shunichi: *See—*
Komiyama, Manabu; Sato, Shunichi; Sonetsuji, Noboru; Ishizaka, Tetsuo; and Yokoi, Saeko, 5,703,893, Cl. 372-43.000.
Sato, Takaaki: *See—*
Reed, John C.; and Sato, Takaaki, 5,702,897, Cl. 435-6.000.
Sato, Toru: *See—*
Itoh, Kenji; and Sato, Toru, 5,702,546, Cl. 152-209.00R.
Mizutani, Kouichi; Tanaka, Takehiko; Maruyama, Kenya; Senda, Masanori; Takeuchi, Katsunao; and Sato, Toru, 5,701,867, Cl. 123-339.160.
Sato, Toshiaki: *See—*
Jester, Randy Douglas; Penoyer, John Arthur; Roth, Douglas Duane; Frank, Detlef; Onodera, Minoru; Tsudaka, Takeichi; Sato, Toshiaki; and Moritani, Tohei, 5,703,202, Cl. 528-481.000.
Sato, Toshichika: *See—*
Izawa, Yosuke; Tani, Masahiro; Okamura, Maoji; Nio, Yutaka; and Sato, Toshichika, 5,703,653, Cl. 348-445.000.
Sato, Yoneji: *See—*
Yokoshima, Minoru; Ohkubo, Tetsuo; Sasahara, Kazunori; Sato, Yoneji; and Baba, Yoko, 5,702,820, Cl. 428-413.000.
Sato, Yoshiaki: *See—*
Nagano, Toshihiro; Sato, Yoshiaki; Nishimori, Jun; and Tachibana, Fusao, 5,701,856, Cl. 123-73.0AD.
Sato, Yoshitoshi: *See—*
Endo, Mitsuyoshi; Asai, Hironori; Yano, Keiichi; and Sato, Yoshitoshi, 5,703,397, Cl. 257-701.000.
Sato, Yuzo; Kaneko, Katsumi; and Saito, Yasushi, to Yagi Antenna Co., Ltd. Radio frequency amplifier having improved CTB and cross modulation characteristics. 5,703,530, Cl. 330-149.000.
Satoh, Makoto: *See—*
Ohtani, Yasuo; Kataho, Takuo; Satoh, Makoto; Tanaka, Tsutomu; Nose, Yoshimasa; Kobayashi, Kazuyoshi; Uchikawa, Tetsuhide; and Hamahata, Toshihiro, 5,703,901, Cl. 373-109.000.
Satomi, Mitsuo: *See—*
Sakakima, Hiroshi; Satomi, Mitsuo; and Takeuchi, Hiroshi, 5,702,834, Cl. 428-692.000.
Satou, Masaharu; Kasahara, Tamiyoshi; Murakami, Takuya; Kawagoe, Kenji; Uno, Takaaki; Aimoto, Hideo; and Horiuchi, Tamaki, to Nissan Motor Co., Ltd. Rear suspension of vehicle. 5,702,122, Cl. 280-691.000.
Sattar, Sohail; and Polsky, Steven E., to InterVoice, Inc. Method and apparatus for delivering calling services. 5,703,940, Cl. 379-201.000.
Satyamurti, Sunil: *See—*
Gorday, Paul Edward; Gorday, Xuan-Khanh Tran; and Satyamurti, Sunil, 5,703,570, Cl. 340-825.440.
Sauer Inc.: *See—*
Gollner, Wilhelm; and Maiers, Manfred, 5,703,345, Cl. 235-384.000.
Sauer, Joe D.: *See—*
Magin, Ralph W.; and Sauer, Joe D., 5,703,016, Cl. 504-206.000.
Sauer, Thomas, to Polymer Latex GmbH & Co. KG. Dispersible powder binders. 5,703,156, Cl. 524-802.000.
Sauveur, Frédéric: *See—*
Wierzbicki, Michel; Sauveur, Frédéric; Boussard, Marie-Francoise; Bonnet, Jacqueline; and Sabatini, Massimo, 5,703,074, Cl. 514-231.500.
Savoie, Rob E.: *See—*
Lawson, John A.; Morrison, W. Andrew; and Savoie, Rob E., 5,703,727, Cl. 359-892.000.
Savu, Patricia M.: *See—*
Johnson, Gilbert C.; Radcliffe, Marc D.; Savu, Patricia M.; Saustad, Daniel C.; and Spawn, Terence D., 5,702,637, Cl. 252-299.610.
Sawabe, Atsuhito: *See—*
Iwasaki, Hitoshi; Ohsawa, Yuichi; Kondoh, Reiko; Hashimoto, Susumu; Sawabe, Atsuhito; Kamiguchi, Yuzo; and Sahashi, Masashi, 5,702,832, Cl. 428-611.000.
Sawada, Seiji, to Mitsubishi Denki Kabushiki Kaisha. Synchronous semiconductor memory device having internal circuitry enabled only when commands are applied in normal sequence. 5,703,831, Cl. 365-233.000.
Sawada, Shinichi: *See—*
Haseba, Yasuhiro; Miyazawa, Kazutoshi; Matsui, Shuichi; Kondo, Tomoyuki; Goto, Yasuyuki; Nakagawa, Etsuo; and Sawada, Shinichi, 5,702,641, Cl. 252-299.630.
Saynad Corporation: *See—*
Brands, George B., 5,703,165, Cl. 525-189.000.
Scalbert, Elisabeth: *See—*
Durand, Ludovic; Babingui, Jean-Paul; Moulin, Claudie; Robert-Piessard, Sylvie; Le Baut, Guillaume; Scalbert, Elisabeth; Caignard, Daniel-Henri; and Renard, Pierre, 5,703,118, Cl. 514-456.000.
Schaap, Robert J.: *See—*
Rose, Jed E.; and Levin, Edward D., 5,703,101, Cl. 514-343.000.
Schachar, Norman S.: *See—*
McPherson, Roger W.; Shrive, Nigel G.; Damson, Erich; Frank, Cyril B.; Lhenea, Fred; and Schachar, Norman S., 5,701,913, Cl. 128-774.000.
Schadel, Richard J., to Atlantic Automotive Components, Inc. Method of top-coating a veneered substrate. 5,702,558, Cl. 156-323.000.
Schaech, Gunther: *See—*
Kaegi, Werner; Stibal, Werner; Schaech, Gunther; Straub, Rainer; and Schmidt, Gerhard, 5,701,644, Cl. 28-220.000.
Schanel, Scott; and Hogsett, Gerald R., II, to Micrografx, Inc. Graphics systems and method having data fields and shape placement control. 5,704,028, Cl. 395-140.000.
Schank, Richard L.; Renfer, Dale S.; Limburg, William W.; Kunzmann, Brendan W.; and Pai, Damodar M., to Xerox Corporation. Compositions and photoreceptor overcoatings containing a dihydroxy arylamine and a crosslinked polyamide. 5,702,854, Cl. 430-59.000.
Schaub, Herbert Raymond; and Smolarek, James, to Praxair Technology, Inc. Vacuum pressure swing adsorption process. 5,702,504, Cl. 95-101.000.
Schawalder, Peter. Shaft component for a joint endoprosthesis. 5,702,479, Cl. 623-23.000.
Scheel, Lyle N.: *See—*
Seaver, Albert E.; Scheel, Lyle N.; Erickson, Luther E.; and Danielson, Daniel R., 5,702,527, Cl. 118-410.000.
Scheepens, Franciscus G. M.: *See—*
Logtens, Gerardus M. C. J.; and Scheepens, Franciscus G. M., 5,702,043, Cl. 226-92.000.
Schefczik, Ernst; Grüttner-Merten, Sabine; Saling, Peter; Sens, Rüdiger; and Reichelt, Helmut, to BASF Aktiengesellschaft. Preparation of pyridine dyes. 5,703,238, Cl. 546-119.000.
Scheffel, James W.: *See—*
Mazurek, Carol; Nelson, Charles L.; Hodges, Steven C.; and Scheffel, James W., 5,702,953, Cl. 436-69.000.
Schemberger, Herman: *See—*
Wilhelm, John J.; and Schemberger, Herman, 5,703,916, Cl. 376-260.000.
Schenck, Robert C.; and Agrawal, C. Mauli, to Board of Regents, The University of Texas System. Bone prosthesis. 5,702,446, Cl. 623-16.000.
Schenke, Thomas: *See—*
Petersen, Uwe; Ruther, Michael; Schenke, Thomas; Bremm, Klaus Dieter; and Endermann, Rainer, 5,703,094, Cl. 514-312.000.
Scheper, William Michael: *See—*
Perkins, Christopher Mark; and Scheper, William Michael, 5,703,030, Cl. 510-311.000.
Schering Aktiengesellschaft: *See—*
Junghans, Klaus, 5,703,261, Cl. 558-38.000.
Ottow, Eckhard; Schwede, Wolfgang; Halfbrodt, Wolfgang; Fritzemeier, Karl-Heinrich; and Krattenmacher, Rolf, 5,703,066, Cl. 514-173.000.
Schering Corporation: *See—*
Afonso, Adriano; Kelly, Joseph M.; and Wolin, Ronald L., 5,703,090, Cl. 514-290.000.
Saksena, Anil K.; Girijavallabhan, Viyyoor M.; Lovey, Raymond G.; Pike, Russell E.; Wang, Haiyan; Liu, Yi-Tsung; Ganguly, Ashit K.; and Bennett, Frank, 5,703,079, Cl. 514-252.000.
Saksena, Anil K.; Girijavallabhan, Viyyoor M.; Lovey, Raymond G.; Pike, Russell E.; Wang, Haiyan; Liu, Yi-Tsung; Ganguly, Ashit K.; and Bennett, Frank, 5,703,236, Cl. 544-366.000.
Schering-Plough HealthCare Products, Inc.: *See—*
Chamness, Thomas W., 5,702,694, Cl. 424-78.030.
Schick, Jean-François, to Goro S. A. Belt connector. 5,701,638, Cl. 24-33.00P.
Schiel, Wolfgang: *See—*
Weiler, Rolf; and Schiel, Wolfgang, 5,701,978, Cl. 188-73.320.
Schiesser, Robert H.: *See—*
Chuang, Strong C.; Kaufman, Kenneth; and Schiesser, Robert H., 5,701,682, Cl. 34-115.000.
Schillaci, Onofrio; and Horton, Michael D., to Harris Corporation. Wireless-wireline communication selection mechanism resident in craftsperson's portable test and communications device. 5,703,929, Cl. 379-21.000.
Schilling, Donald L., to InterDigital Technology Corporation. Broadband CDMA overlay system and method. 5,703,874, Cl. 370-335.000.
Schimpf, James E.: *See—*

Gardner, Cynthia M.; Stone, Robert E.; Duffy, John D.; Allen, William E.; and Schimpf, James E., 5,701,793, Cl. 91-361.000.
Schinazi, Raymond F.; and Liotta, Dennis C., to Emory University. Compositions containing 5-fluoro-2',3'-didehydro-2',3'-dideoxycytidine or a mono-, di-, or triphosphate thereof and a second antiviral agent. 5,703,058, Cl. 514-45.000.
Schleinz, Robert Joseph: *See—*
Glaug, Frank Steven; Brunner, Michael Scott; Cochrane, Faith Eileen; Durrance, Debra Hartley; Olson, Christopher Peter; Schleinz, Robert Joseph; and Thiessen, Richard Harry, 5,702,376, Cl. 604-361.000.
Schleiter, Burkhard, to Svedala Strassenfertiger GmbH. Laying beam for a road finisher. 5,702,202, Cl. 404-118.000.
Schlicht, Rainer: *See—*
Heinrich, Rudolf; Maier, Thomas; Kocur, Jean; and Schlicht, Rainer, 5,703,010, Cl. 504-116.000.
Schlosberg, Richard H.: *See—*
Cusumano, Joseph Victor; Diana, William Daniel; Emert, Jacob; Gorda, Keith Raymond; Schlosberg, Richard H.; Young, David A.; Yezrielev, Albert I.; Eckstrom, William Bernard; Manry, Edris Eileen; and Keenan, Michael John, 5,703,256, Cl. 554-224.000.
Schlumberger Technology Corporation: *See—*
Flores, Aaron G., 5,701,751, Cl. 62-169.000.
Schmid, Michael, to Ina Wälzlager Schaeffler KG. Device for damping spring vibrations. 5,702,314, Cl. 474-94.000.
Schmidt, Emmanuel: *See—*
Cieutat, Denis; and Schmidt, Emmanuel, 5,702,678, Cl. 423-567.100.
Schmidt, Gerhard: *See—*
Kaegi, Werner; Stibal, Werner; Schaech, Gunther; Straub, Rainer; and Schmidt, Gerhard, 5,701,644, Cl. 28-220.000.
Schmidt, Jeff: *See—*
Long, Eugene; Schmidt, Jeff; and Lynch, Frank, 5,702,491, Cl. 48-197.00R.
Schmidt, Karl M.; Jenkins, Stuart E.; and Edwards, Harry W., to Energaire Corporation. Thrust producing sole and heel structure with interior and exterior fluid filled pockets. 5,701,687, Cl. 36-29.000.
Schmidt, Peter: *See—*
Rapp, Werner; and Schmidt, Peter, 5,703,339, Cl. 200-17.00R.
Schmidt, Steffen: *See—*
Treutler, Christoph; Benz, Rolf; Muenzel, Horst; Schmidt, Steffen; Reihlen, Eckart; and Lock, Andreas, 5,703,287, Cl. 73-204.260.
Schmiedel, Carmen: *See—*
Dietz, Hermann; Gruenwald, Werner; De La Prieta, Claudio; Lindemann, Gert; Eisele, Ulrich; and Schmiedel, Carmen, 5,702,580, Cl. 204-426.000.
Schmitz, Gudrun: *See—*
Höltke, Hans-Joachim; Seibl, Rudolf; Schmitz, Gudrun; Schöler, Hans Robert; Kessler, Christoph; and Mattes, Ralf, 5,702,888, Cl. 435-6.000.
Schmutz, Thomas: *See—*
Rotzinger, Bruno; Schmutz, Thomas; Brunner, Martin; and Stauffer, Werner, 5,703,149, Cl. 524-116.000.
Schneeberger, Stefan, to Siemens Aktiengesellschaft. ATM communication system wherein upstream switching element stops the transmission of message for a predetermined period of time upon backpressure signal. 5,704,047, Cl. 395-200.650.
Schneider, Bjoern: *See—*
Brassai, Zoltan; Schneider, Bjoern; and Premiski, Vladimir, 5,702,320, Cl. 475-159.000.
Schneider, Michel: *See—*
Tournier, Hervé; Schneider, Michel; and Guillot, Christian, 5,702,722, Cl. 424-450.000.
Schneider, Wolfgang, to Eidgenoessische Technische Hochschule Laboratorium Fuer Verbrennungsmotoren Und Verbrennungstechnik. Control device for a filling-ratio adjusting pump. 5,701,873, Cl. 123-516.000.
Schneidt, Bernhard. Closure device for closing a vascular opening, such as patent ductus arteriosus. 5,702,421, Cl. 606-213.000.
Schnepf, H. Ernest; Stockhoff, Brian; and Knuth, Mark, to Mycogen Corporation. *Bacillus thuringiensis* toxin enhancer. 5,702,703, Cl. 424-93.461.
Schnitzer, Klaus: *See—*
Dauth, Jochen; Herzig, Christian; Deubzer, Bernward; Schnitzer, Klaus; and Huettner, David, 5,703,190, Cl. 528-12.000.
Schoeller-Plast S.A.: *See—*
Umiker, Hans, 5,702,022, Cl. 220-509.000.
Schoen, Jerry W.; Dahlstrom, Norris A.; and Klapheke, Christopher G., to Armco Inc. Method for producing silicon-chromium grain orieted electrical steel. 5,702,539, Cl. 148-111.000.
Schoen, Vulgens: *See—*
Smith, Daniel; Willis, Bernard M.; Marschke, Kenneth P., Jr.; Littlewood, Barry; Schoen, Vulgens; Gucker, Carl; Nordmeyer, Michael; and Miklewicz, Thaddeus, 5,701,656, Cl. 29-558.000.
Schöler, Hans Robert: *See—*
Höltke, Hans-Joachim; Seibl, Rudolf; Schmitz, Gudrun; Schöler, Hans Robert; Kessler, Christoph; and Mattes, Ralf, 5,702,888, Cl. 435-6.000.
Schonauer, Diana M.: *See—*
Salugsugan, Isidore; and Schonauer, Diana M., 5,702,563, Cl. 156-636.100.
Schönenberg, Frank-Heinrich, to Keiper Recaro GmbH & Co. Airline passenger seats. 5,702,154, Cl. 297-257.000.
Schoof, William H., to Chemical Lime Company. Kiln lining and method. 5,702,247, Cl. 432-103.000.
Schott, Wilhelm: *See—*
Adamek, Wolfgang; Kretschmer, Horst; Entrup, Hubert Grosse; Nienhaus, Clemens; Herchenbach, Paul; Sarfert, Andreas; Kämpf, Klaus; and Schott, Wilhelm, 5,702,306, Cl. 464-172.000.
Schrader, Charles Henry: *See—*
Tsang, Chih-Hao Mark; Petty, Randall Hughes; Clausen, Glenn Allen; and Schrader, Charles Henry, 5,702,589, Cl. 208-67.000.
Schrage, Heinrich: *See—*
Heuer, Lutz; Wachtler, Peter; Kugler, Martin; Schrage, Heinrich; and Sasse, Klaus, 5,703,103, Cl. 514-365.000.
Schreiber Fodds, Inc.: *See—*
Meli, Vincent A.; Matharani, Michael A.; Brzezinski, Ted A.; Shaft, David L.; and Urmanski, James L., 5,701,724, Cl. 53-451.000.
Schreiber, Heinz H.: *See—*
Campbell, Thomas A.; Schreiber, Heinz H.; and Yioves, Niki, 5,703,593, Cl. 342-96.000.
Schriks, Cornelis G.: *See—*
van de Water, Peter W. M.; Groenhuis, Roelf A. J.; and Schriks, Cornelis G., 5,703,401, Cl. 257-727.000.
Schröder, Dieter: *See—*
Nagels, Hans-Otto; Schröder, Dieter; and Kopowski, Eckart, 5,702,945, Cl. 435-297.100.
Schroeder, Mel C.: *See—*
DeWitt, Sheila H. H.; Kell, Michael; Pavia, Michael R.; Kiely, John S.; Schroeder, Mel C.; Stankovic, Charles J.; and Ware, Steven, 5,702,672, Cl. 422-131.000.
Schroeer, Steven C.: *See—*
Tompkins, Thomas L.; Shirk, Ryan C.; Schroeer, Steven C.; Merry, Richard P.; Ista, Troy K.; and Bloom, Richard L., 5,702,494, Cl. 55-498.000.
Schubert, Hans-Herbert: *See—*
Sagenmüller, Alfons; Schubert, Hans-Herbert; Uzawa, Shigeru; and Saito, Kenichi, 5,703,132, Cl. 514-643.000.
Schubert, Peter; and Adamiak, Hubert, to PRECITEX GmbH. Terminal head for processing a workpiece by means of a laser beam. 5,702,622, Cl. 219-121.750.
Schuegraf, Klaus F.; and Ahmad, Aftab, to Micron Technology, Inc. Shallow trench isolation using low dielectric constant insulator. 5,702,976, Cl. 437-67.000.
Schuller International, Inc.: *See—*
Martin, Phillip Charles; Shumate, Monroe W.; and Gregg, William Michael, 5,703,147, Cl. 523-212.000.
Schulmann, Winfried; Thimm, Franz; and Kaiser, Helmut, to Leybold Aktiengesellschaft. Rotating head for crystal pulling systems. 5,702,523, Cl. 117-208.000.
Schultz, Robert: *See—*
Meshberg, Emil; Miller, Philip; and Schultz, Robert, 5,702,031, Cl. 222-1.000.
Schultz, Rose Ann; and Fenelli, Steven P., to National Starch and Chemical Investment Holding Corporation. Polyglycidylphenyl ethers of alkylene or alkyleneoxy chains for use in microelectronics adhesives. 5,703,195, Cl. 528-103.000.
Schulz, Anthony A.; and Buddrus, David J., to Enviroderm Pharmaceuticals, Inc. Skin allergen and irritant barrier lotion. 5,702,709, Cl. 424-401.000.
Schulze, Eckehart; and Bytow, Peter, to Trumpf GmbH & Co. Workpiece processing machine with retractable clamping device. 5,701,791, Cl. 83-277.000.
Schulze, Mark H.: *See—*
Guzinski, James A.; and Schulze, Mark H., 5,702,737, Cl. 426-33.000.
Schuman, Bruce M.; and Ting, Edmund Y., to Flow International Corporation. Method and apparatus for pressure processing a pumpable food substance. 5,701,808, Cl. 99-453.000.
Schüssler, Simone: *See—*
Birkhan, Horst; Fender, Michael; Irrgang, Bernhard; Löffert, Christiane; and Schüssler, Simone, 5,703,035, Cl. 510-423.000.
Schütz, Heinz-Dieter: *See—*
Odenwälder, Heinrich; Langen, Hans; Dahlhaus, Uwe; and Schütz, Heinz-Dieter, 5,702,877, Cl. 430-551.000.
Schwall, Ralph: *See—*
Roos, Filip; and Schwall, Ralph, 5,703,048, Cl. 514-12.000.
Schwartz, Daniel B.: *See—*
Shook, Stephen G.; Chun, Christopher K. Y.; and Schwartz, Daniel B., 5,703,506, Cl. 327-87.000.
Schwartz, Krista S.: *See—*
Hester, John; and Schwartz, Krista S., 5,704,042, Cl. 395-200.340.
Schwartz, Stephen A.: *See—*
Beckman, Ralph A.; Schwartz, Stephen A.; Radosevich, Roseann; and Trammell, Michele P., 5,702,282, Cl. 446-267.000.
Schwarz, Martin: *See—*
von Schnering, Hans-Georg; Becker, Winfried; Schwarz, Martin; Hettich, Bernhard; Hartweg, Martin; Walz, Leonhard; and Popp, Thomas, 5,703,021, Cl. 505-501.000.
Schwarz, Ray P., to Synthecon, Inc. Gas permeable bioreactor and method of use. 5,702,941, Cl. 435-243.000.
Schwarzer, Joerg: *See—*
Hunt, Tracy K.; and Schwarzer, Joerg, 5,703,252, Cl. 549-413.000.
Schwede, Wolfgang: *See—*
Ottow, Eckhard; Schwede, Wolfgang; Halfbrodt, Wolfgang; Fritzemeier, Karl-Heinrich; and Krattenmacher, Rolf, 5,703,066, Cl. 514-173.000.

Schweinzer, Jürgen; Fischer, Joachim; De Grave, Isidoor; and Kögel, Wolfram, to BASF Aktiengesellschaft. Production of expanded polyolefin beads. 5,703,135, Cl. 521-60.000.
Schweitzer Engineering Laboratories, Inc.: *See—*
Lee, Tony J., 5,703,743, Cl. 361-6.000.
Roberts, Jeffrey B.; and Hou, Daqing, 5,703,745, Cl. 361-89.000.
Schweitzer-Mauduit International, Inc.: *See—*
Caudal, Pierre; Mahe, Guy; Baker, Georgia Anna; and Duis, James Joseph, 5,702,555, Cl. 156-247.000.
Scientific Design Company, Inc.: *See—*
Rizkalla, Nabil, 5,703,001, Cl. 502-347.000.
Scifres, Donald R.: *See—*
Welch, David F.; Mehuys, David G.; and Scifres, Donald R., 5,703,897, Cl. 372-50.000.
SciMed Life Systems, Inc.: *See—*
Keith, Peter T.; and Euteneuer, Charles L., 5,702,439, Cl. 604-96.000.
Lafontaine, Daniel M., 5,702,413, Cl. 606-159.000.
Scrimp Systems, LLC: *See—*
Seemann, William, 5,702,663, Cl. 264-510.000.
SDL, Inc.: *See—*
Welch, David F.; Mehuys, David G.; and Scifres, Donald R., 5,703,897, Cl. 372-50.000.
Seabulk Systems Inc.: *See—*
Sridhar, Sidney, 5,702,221, Cl. 414-142.300.
Seaver, Albert E.; Scheel, Lyle N.; Erickson, Luther E.; and Danielson, Daniel R., to Minnesota Mining and Manufacturing Company. Restricted flow die. 5,702,527, Cl. 118-410.000.
Sebald, Michael: *See—*
Sezi, Recai; Borndoerfer, Horst; Ahne, Hellmut; Birkle, Siegfried; Kuehn, Eberhard; Leuschner, Rainer; Rissel, Eva; and Sebald, Michael, 5,703,186, Cl. 526-272.000.
Sebők, Péter: *See—*
Eszenyi, Tibor; Sebők, Péter; Frank, László; Papp, Gyula; Timár, Tibor; and Bartik, Tamás, 5,703,113, Cl. 514-422.000.
Sodepro: *See—*
Arnaud, Jean-Claude; and Costa Pereira, Pedro, 5,702,548, Cl. 152-547.000.
Sedy, Josef, to Durametallic Corporation. Face seal with angled grooves and shallow annular groove. 5,702,110, Cl. 277-96.100.
Seefried, Carl G., Jr.: *See—*
Rothgery, Eugene F.; and Seefried, Carl G., Jr., 5,703,323, Cl. 149-88.000.
Seemann, William, to Scrimp Systems, LLC. Vacuum bag for forming fiber reinforced composite articles and method for using same. 5,702,663, Cl. 264-510.000.
Seering, Christine L.; and Seering, Mona E. Prenatal cradle. 5,702,286, Cl. 450-155.000.
Seering, Mona E.: *See—*
Seering, Christine L.; and Seering, Mona E., 5,702,286, Cl. 450-155.000.
Segall, Judith M.: *See—*
Segall, Paul E.; Sternberg, Hal; Waitz, Harold D.; and Segall, Judith M., 5,702,880, Cl. 435-1.200.
Segall, Paul E.; Sternberg, Hal; Waitz, Harold D.; and Segall, Judith M., to BioTime, Inc. Blood substitute comprising 0-5 mM K^+. 5,702,880, Cl. 435-1.200.
SEH America, Inc.: *See—*
Mitani, Kiyoshi; and Wijaranakula, Witiwat, 5,702,973, Cl. 437-57.000.
Sakauchi, Kazuo; Hirano, Yoshihiro; and Uchikawa, Akira, 5,702,522, Cl. 117-2.000.
Seibert, Mike: *See—*
Hush, Glen; Seibert, Mike; Mailloux, Jeff; and Thomann, Mark R., 5,703,826, Cl. 365-230.050.
Seibl, Rudolf: *See—*
Höltke, Hans-Joachim; Seibl, Rudolf; Schmitz, Gudrun; Schöler, Hans Robert; Kessler, Christoph; and Mattes, Ralf, 5,702,888, Cl. 435-6.000.
Seidel, Peter: *See—*
Zell, Karl; and Seidel, Peter, 5,703,762, Cl. 361-816.000.
Seidl, Joachim: *See—*
Fernandez-Kirchberger, Paul; and Seidl, Joachim, 5,702,789, Cl. 428-40.100.
Seikagaku Kogyo Kabushiki Kaisha (Seikagaku Corporation): *See—*
Tamura, Hiroshi; Oda, Toshio; and Tanaka, Shigenori, 5,702,882, Cl. 435-4.000.
Seiko Epson Corporation: *See—*
Matsuhashi, Kunihiko; Sodeyama, Hideo; and Inakoshi, Daisuke, 5,702,192, Cl. 400-613.000.
Nagate, Takashi; Uetake, Akihito; Koike, Yoshikazu; and Tabata, Kunio, 5,703,449, Cl. 318-254.000.
Seiko Seiki Co., Inc.: *See—*
Fukao, Tadashi; Chiba, Akira; and Michioka, Chikara, 5,703,423, Cl. 310-90.500.
Seikon Epson Corporation: *See—*
Kanna, Shigeo; and Uetake, Akihito, 5,703,768, Cl. 363-98.000.
Seitzer, Dieter: *See—*
Herre, Jurgen; Seitzer, Dieter; Brandenburg, Karl-Heinz; and Eberlein, Ernst, 5,703,999, Cl. 395-2.120.
Seki, Kenji: *See—*
Akamatsu, Mikio; Seki, Kenji; Yamashita, Katsuhiro; Kobayashi, Takeya; and Taniguchi, Takashi, 5,701,762, Cl. 62-636.000.
Sekiyama, Yasushi: *See—*
Takata, Asami; Numata, Shoko; Mizukami, Yuichi; Sekiyama, Yasushi; and Takahashi, Masato, 5,703,124, Cl. 514-514.000.
Selby, Stephen E.: *See—*
Larson, Richard I.; Selby, Stephen E.; and Enger, Michael P., 5,702,676, Cl. 423-261.000.
Selfe, Margaret A.: *See—*
McClish, Michael A.; Lynch, Marvin L.; Selfe, Margaret A.; Steinl, Gregory; and Remboski, Donald J., Jr., 5,703,283, Cl. 73-116.000.
Selig Sealing Products, Inc.: *See—*
Giles, Joseph M.; Bennington, William; and Brucker, Steven, 5,702,015, Cl. 215-232.000.
Selitrennikoff, Claude P.: *See—*
Roberts, Walden K.; Selitrennikoff, Claude P.; Lane, Bridget E.; and Potter, Sharon L., 5,703,044, Cl. 514-12.000.
Semenenko, Ivan, to Matcon Limited. Material handling apparatus having nestable pallets. 5,702,034, Cl. 222-143.000.
Semple, Joseph Edward; Ardecky, Robert John; Nutt, Ruth Foelsche; Ripka, William Charles; Rowley, David C.; Lim-Wilby, Marguerita S. L.; and Brunck, Terence Kevin, to Corvas International, Inc. 3-amino-2-oxo-1-piperidineacetic derivatives as enzyme inhibitors. 5,703,208, Cl. 530-331.000.
Semtech, Inc.: *See—*
Funk, Michael R.; Irwin, Larry E.; and Foster, Michael D., 5,702,588, Cl. 205-695.000.
Senda, Masanori: *See—*
Mizutani, Kouichi; Tanaka, Takehiko; Maruyama, Kenya; Senda, Masanori; Takeuchi, Katsunao; and Sato, Toru, 5,701,867, Cl. 123-339.160.
Senda, Shinya; and Haraguchi, Hiroshi, to Kabushiki Kaisha Toshiba. Alignment method. 5,703,685, Cl. 356-401.000.
Sens, Rüdiger: *See—*
Schefczik, Ernst; Grüttner-Merten, Sabine; Saling, Peter; Sens, Rüdiger; and Reichelt, Helmut, 5,703,238, Cl. 546-119.000.
Sensormatic Electronics Corporation: *See—*
Herring, Richard L., 5,703,565, Cl. 340-572.000.
Sentech Medical Systems, Inc.: *See—*
Biggie, John; and Biggie, Lydia B., 5,701,622, Cl. 5-713.000.
Senyarich, Stéphane: *See—*
Bernard, Patrick; Lecerf, André; Senyarich, Stéphane; and Audry, Claudette, 5,702,844, Cl. 429-223.000.
Sernit, Eric: *See—*
Feral, Thierry; Fromont, Bernard; Stephan, Ronan; Sernit, Eric; and Lacour, Olivier, 5,703,425, Cl. 310-366.000.
Setser, Drew Douglas; and Deckner, George Endel, to Procter & Gamble Company, The. Skin cleansing bar soap compositions comprising particles of absorbent gellant materials. 5,703,026, Cl. 510-152.000.
Sevenat, Jean: *See—*
Mardon, Jean-Paul; Sevenat, Jean; and Charquet, Daniel, 5,702,544, Cl. 148-672.000.
Severn, E. Thomas, to Intel Corporation. Land grid array socket for use with integrated circuit modules of different sizes including modules which are larger than the socket. 5,702,256, Cl. 439-71.000.
Severson, Mark Hamilton; and Squier, Steven Eric, to Sundstrand Corporation. Cooling of aircraft electronic heat loads. 5,701,755, Cl. 62-402.000.
Sextant Avionique: *See—*
Morbieu, Bertrand, 5,703,679, Cl. 356-28.500.
Seydel, Lee Chopek: *See—*
Raissyan, Anousheh; Wood, Kody Raymond; Jacobi, Michael Joseph; King, Linda S.; Seydel, Lee Chopek; Torbert, Michele Pauline; and Leonard, Robert Gary, 5,703,935, Cl. 379-88.000.
Sezi, Recai; Borndoerfer, Horst; Ahne, Hellmut; Birkle, Siegfried; Kuehn, Eberhard; Leuschner, Rainer; Rissel, Eva; and Sebald, Michael, to Siemens Aktiengesellschaft. Mixed polymers. 5,703,186, Cl. 526-272.000.
SGS-Thomson Microelectronics, Inc.: *See—*
Chan, Tsiu C.; Bryant, Frank R.; and Nguyen, Loi N., 5,702,979, Cl. 437-187.000.
McClure, David C., 5,703,512, Cl. 327-198.000.
SGS-Thomson Microelectronics S.A.: *See—*
Meyer, Jacques, 5,703,526, Cl. 329-304.000.
SGS-Thomson Microelectronics S.r.l.: *See—*
Baroni, Andrea; Mastrodomenico, Giovanni; Taliercio, Michele; Capocelli, Piero; Carro, Luigi; and Varambally, Rajamohan, 5,703,821, Cl. 315-210.000.
Merlo, Mauro; Cocetta, Franco; Marchió , Fabio; Grasso, Massimo; and Murari, Bruno, 5,703,476, Cl. 323-313.000.
Nebuloni, Daniela; and Fassina, Andrea, 5,703,528, Cl. 330-51.000.
Shadan, Victor; and Nigam, Anurag, to Intel Corporation. Dynamically controlled, cross-stacked CAM cell. 5,703,803, Cl. 365-49.000.
Shaffer, Benjamin. Intra-articular measuring device. 5,702,401, Cl. 606-102.000.
Shaffer, Timothy Daniel, to Exxon Chemical Patents Inc. Carbocationic catalysts and process for using said catalysts. 5,703,183, Cl. 526-189.000.
Shaft, David L.: *See—*
Meli, Vincent A.; Matharani, Michael A.; Brzezinski, Ted A.; Shaft, David L.; and Urmanski, James L., 5,701,724, Cl. 53-451.000.
Shakushi, Tetsuo: *See—*
Imamura, Toshihide; Kadotani, Kanichi; Hayakashi, Bunji; Imaizumi, Hisaakira; Shakushi, Tetsuo; Matsumoto, Toshihiko; and Watanabe, Genichiro, 5,701,950, Cl. 165-222.000.

Shan, Hongching; Herchen, Harald; and Welch, Michael, to Applied Materials, Inc. Distributed microwave plasma reactor for semiconductor processing. 5,702,530, Cl. 118-723.0MP.
Shankar, Ravi B.; Romer, Duane R.; and Pews, R. Garth, to Dow Chemical Company, The. 1,2,5-thiadiazolo-1,3-dithiole-2-one (or thione) as antimicrobial and marine antifouling agents. 5,703,102, Cl. 514-362.000.
Shankar, Ravi B.; Romer, Duane R.; and Pews, R. Garth, to Dow Chemical Company, The. Use of 4,5-dicyano-1-3-dithiole-2-one (or thione) as antimicrobial and marine antifouling agents. 5,703,118, Cl. 514-441.000.
Sharkey, J. Brian; Doblar, Randy A.; Bothwell, Frank E.; Belt, Ronald A.; and Page, Edward A., to Alliant Techsystems Inc. System for effective control of urban environment security. 5,703,835, Cl. 367-124.000.
Sharp Kabushiki K.K.: *See*—
Takata, Hidekazu; Mnich, Thomas; and Novosel, David, 5,703,804, Cl. 365-145.000.
Sharp Kabushiki Kaisha: *See*—
Ezra, David; Woodgate, Graham John; Harrold, Jonathan; and Omar, Basil Arthur, 5,703,717, Cl. 359-462.000.
Fujioka, Kazuyoshi; Kubo, Masumi; and Takafuji, Yutaka, 5,703,663, Cl. 349-5.000.
Jinda, Akihito, 5,703,744, Cl. 361-59.000.
Mitate, Takehito; and Nishijima, Motoaki, 5,702,843, Cl. 429-218.000.
Miyamoto, Masayuki; Iizuka, Kunihiko; Fujio, Mitsuhiko; and Matsui, Hirofumi, 5,703,503, Cl. 327-58.000.
Yamada, Nobuaki; Kozaki, Shuichi; Mizobe, Hoyo; Yoshida, Masahiko; and Suzuki, Kenji, 5,702,642, Cl. 252-299.660.
Yamasaki, Kazuyuki; Kataoka, Masaki; Sakata, Kazuyuki; and Imazu, Shirou, 5,702,594, Cl. 210-151.000.
Yamasaki, Kazuyuki; Yokotani, Atsushi; and Imazu, Shirou, 5,702,604, Cl. 210-603.000.
Sharp, Timothy Lee: *See*—
Brodsky, William Louis; Herard, James Daniel; Macek, Thomas George; Sharp, Timothy Lee; and Shovlowsky, George Joseph, 5,703,331, Cl. 174-254.000.
Sharpe, Richard J.; Arndt, Kenneth A.; Galli, Stephen J.; Meltzer, Peter C.; Razdan, Raj K.; and Sard, Howard P., to Beth Israel Deaconess Medical Center, Inc. Topical application of spiperone or derivatives thereof for treatment of pathological conditions associated with immune responses. 5,703,088, Cl. 514-278.000.
Sharples, James Henry, to Pifco Limited. Heating apparatus. 5,702,623, Cl. 219-436.000.
Shau, Tan Ming: *See*—
Nitta, Katuhisa; Shau, Tan Ming; and Sugahara, Jun, 5,702,519, Cl. 106-442.000.
Shaw, Donald. Convertible rocker. 5,702,152, Cl. 297-133.000.
Shaw, Jeffery H., to PACCAR Inc. Hand stabilizing identification member for an instrument panel. 5,702,078, Cl. 248-118.000.
Shawcross, Andrew Paul: *See*—
Renfrew, Andrew Hunter Morris; and Shawcross, Andrew Paul, 5,703,215, Cl. 534-642.000.
Shea, Andrew J.: *See*—
Luedke, Thomas J.; Aagaard, Randy G.; Niemi, Carl A.; and Shea, Andrew J., 5,701,703, Cl. 52-36.500.
Sheargold, Stephen W.; and Andersen, Terrell N., to Kerr-McGee Chemical Corp. Method of preparing Li_{1+x}-$Mn_{2-x}O_4$ for use as secondary battery. 5,702,679, Cl. 423-599.000.
Sheehan, David G.: *See*—
Gabriel, Stefan M.; and Sheehan, David G., 5,702,467, Cl. 623-20.000.
Shehada, Ramez E.; and Grundfest, Warren S., to Cedars-Sinai Medical Center. Ultrasonic transducer orientation sensing and display apparatus and method. 5,701,900, Cl. 128-662.030.
Shei, Darlene; and Cheng, Jiurong, to LSI Logic Corporation. Configuration management and automated test system ASIC design software. 5,703,788, Cl. 364-488.000.
Shell Oil Company: *See*—
Evans, Wayne E.; and Mesters, Carolus Matthias Anna Maria, 5,703,253, Cl. 549-536.000.
Shen, Alexander: *See*—
Hayes, Earl J.; Hutchinson, Timothy A.; Hein, David A.; Shen, Alexander; and Pike-Biegunski, Michael J., 5,703,757, Cl. 361-752.000.
Shen, Lewis, to Advanced Micro Devices, Inc. Method of etching conductive lines without undercutting. 5,702,564, Cl. 156-643.100.
Shen, Yan-Fei: *See*—
O'Young, Chi Lin; Shen, Yan-Fei; Dequzman, Roberto Nguyen; and Suib, Steven Lawrence, 5,702,674, Cl. 423-50.000.
Shepard, Phillip W.: *See*—
Reddersen, Brad R.; Shepard, Phillip W.; Moch, Rockie D.; and Williams, Jon Paul Charles, 5,703,347, Cl. 235-472.000.
Shepodd, Timothy J.; and Phillip, Bradley L., to Sandia Corporation. Materials for the scavanging of hydrogen at high temperatures. 5,703,378, Cl. 252-182.120.
Sherry, Alan Edward; Connor, Daniel Stedman; Stidham, Robert Emerson; and Vinson, Phillip Kyle, to Procter & Gamble Company, The. Low sudsing, low streaking and filming hard surface cleaners. 5,703,033, Cl. 510-237.000.
Sherry, Barbara: *See*—
Wolpe, Stephen D.; Cerami, Anthony; and Sherry, Barbara, 5,703,206, Cl. 530-324.000.
Shet, Ramakant Tukaram; and Wallajapet, Palani Raj R., to Kimberly-Clark Worldwide; Inc. Sulfonated cellulose having improved absorbent properties. 5,703,225, Cl. 536-59.000.
Shi, Song Q.: *See*—
Wei, Chengping; Shi, Song Q.; and Lee, Hsing-Chung, 5,703,394, Cl. 257-433.000.
Shiba, Yoshio: *See*—
Kishi, Sohtaroh; Shiba, Yoshio; Miyake, Hidekazu; and Kuenzel, Wilhelm, 5,702,748, Cl. 426-478.000.
Shibata, Hirotaka: *See*—
Kubomura, Kenji; Kimura, Hiromi; and Shibata, Hirotaka, 5,702,993, Cl. 442-204.000.
Shibuya, Souichi: *See*—
Numata, Shigeaki; and Shibuya, Souichi, 5,702,615, Cl. 210-759.000.
Shields, Anne Marie: *See*—
Foo, Chek-Peng; Yeh, Huahn-Fern; Wright, Timothy Chester; and Shields, Anne Marie, 5,702,124, Cl. 280-735.000.
Shigematsu, Kazuo: *See*—
Kirino, Fumiyoshi; Toda, Tsuyoshi; Ide, Horishi; Sugiyama, Hisataka; Saito, Atsushi; Tsuchinaga, Hiroyuki; Maeda, Takeshi; Kugiya, Fumio; Kaku, Toshimitsu; Mita, Seiichi; Shigematsu, Kazuo; and Ouchi, Yasuhide, 5,703,855, Cl. 369-54.000.
Shigematsu, Yukifumi; and Matsumoto, Gen, to Agency of Industrial Science & Technology, Ministry of International Trade & Industry. Temporal learning neural network. 5,704,016, Cl. 395-27.000.
Shih, Ishiang; Phong, Linh Ngo; Qiu, Cindy Xing; and Laou, Philips. Methods for wavelength discrimination of monochromatic light beams. 5,703,357, Cl. 250-226.000.
Shih, Tung-Sheng; Yeh, Wen-Yu; Chen, Chih-Chieh; and Lai, Chane-Yu, to Institute of Occupational Safety and Health, Council of Labor Affairs, Executive Yuan. Method and device for aerosol size-selective sampling. 5,702,506, Cl. 95-287.000.
Shikakura, Akihiro, to Canon Kabushiki Kaisha. Coding apparatus. 5,703,648, Cl. 348-405.000.
Shiko Electric Industries Co., Ltd.: *See*—
Horiuchi, Michio; and Harayama, Yoichi, 5,702,807, Cl. 428-210.000.
Shima Seiki Manufacturing, Ltd.: *See*—
Takahashi, Nobuyasu, 5,701,766, Cl. 66-70.000.
Shimada, Junichi: *See*—
Suzuki, Fumio; Koike, Nobuaki; Shimada, Junichi; Nakamura, Joji; Shiozaki, Shizuo; Kitamura, Shigeto; Ichikawa, Shunji; Kase, Hiroshi; and Nonaka, Hiromi, 5,703,085, Cl. 514-263.000.
Shimada, Masaru: *See*—
Torii, Masafumi; Furuya, Hiromi; Shimada, Masaru; and Tsutsui, Kyoji, 5,703,005, Cl. 503-201.000.
Shimada Precision, Co., Ltd.: *See*—
Ochiai, Shin-Ichiro, 5,703,667, Cl. 349-65.000.
Shimaji, Katsumi: *See*—
Matsumura, Yoshio; and Shimaji, Katsumi, 5,701,627, Cl. 15-88.200.
Shimamoto, Katsuhiko: *See*—
Osawa, Yukio; Shimamoto, Katsuhiko; Ishigaki, Shinichi; Araki, Hitoshi; Nakata, Yukio; and Fujimaru, Atsushi, 5,702,501, Cl. 75-255.000.
Shimano, Inc.: *See*—
Kawakami, Tatsuya, 5,701,786, Cl. 74-502.200.
Shimanoe, Kengo: *See*—
Shimokawa, Kenji; Dohnomae, Hitoshi; Mukai, Toshio; and Shimanoe, Kengo, 5,702,793, Cl. 428-64.300.
Shimasaki, Tetsuo: *See*—
Ueno, Makoto; Fujita, Katsutoshi; and Shimasaki, Tetsuo, 5,703,426, Cl. 310-258.000.
Shimazaki, Mitsuo, to Tachi-S Co., Ltd. Arrangement for anchoring a guard net in automobile. 5,702,143, Cl. 296-24.100.
Shimeki, Yasuharu: *See*—
Kojima, Yoshihiro; Yamamoto, Hiroshi; Maruno, Susumu; and Shimeki, Yasuharu, 5,703,963, Cl. 382-197.000.
Shimizu, Hirokazu; and Machida, Kenichi, to Unisia Jecs Corporation. Diagnosis apparatus and method for an exhaust gas recirculation unit of an internal combustion engine. 5,703,285, Cl. 73-118.100.
Shimizu, Kano: *See*—
Muchi, Tsuneo; Kono, Yoji; and Shimizu, Kano, 5,702,526, Cl. 118-213.000.
Shimizu, Kazuhiro: *See*—
Toyama, Akira; and Shimizu, Kazuhiro, 5,703,515, Cl. 327-294.000.
Shimizu, Osamu; Harada, Kazuya; Wada, Shinichi; Fujimoto, Tetsuya; and Inui, Takanari, to Fujitsu Limited. Dot-matrix line printer. 5,702,190, Cl. 400-341.000.
Shimoda, Kenji; and Takeda, Hitoshi, to Kabushiki Kaisha Toshiba. High efficiency coding signal processing apparatus with error propagation influence reduction. 5,703,889, Cl. 371-55.000.
Shimoda, Kenji: *See*—
Umemoto, Toshio; Fukuda, Masami; Shimoda, Kenji; Kitajima, Yasuo; Kobayashi, Isamu; and Udou, Yurie, 5,703,837, Cl. 368-88.000.
Shimokawa, Kenji; Dohnomae, Hitoshi; Mukai, Toshio; and Shimanoe, Kengo, to Nippon Steel Corporation. Magneto-optical recording medium, disk and method of manufacturing the same. 5,702,793, Cl. 428-64.300.
Shimomae, Mutsuo: *See*—
Hanyu, Yoshiaki; and Shimomae, Mutsuo, 5,704,020, Cl. 395-102.000.
Shimoya, Masahiro: *See*—
Torigoe, Eiichi; and Shimoya, Masahiro, 5,701,760, Cl. 62-524.000.
Shimoyama, Kenichi: *See*—
Arai, Youichi; O'Toole, Brendan; Saigo, Tsutomu; Shimoyama, Kenichi; Kumagai, Ryo; and Takada, Yoshihide, 5,703,486, Cl. 324-427.000.

Shimp, Lawrence A.; and Reakema, Peter J., to Osteotech, Inc. Spherical hydroxyapatite particles and process for the production thereof. 5,702,677, Cl. 423-308.000.
Shin, Chan Soo; and Kim, Choon Hwan, to Hyundai Electronics Industries Co., Ltd. Method of forming a via hole of a semiconductor device with spin-on-glass film sealed by an oxide film. 5,702,568, Cl. 156-644.100.
Shin-Etsu Bio, Inc.: *See*—
Murofushi, Kanji; Homma, Taira; Nagura, Shigehiro; and Armentrout, Richard W., 5,702,927, Cl. 435-104.000.
Shin-Etsu Chemical Co., Ltd.: *See*—
Ichinohe, Shoji; Yamazaki, Toshio; and Yamamoto, Akira, 5,703,159, Cl. 525-54.300.
Kimura, Noboru; and Iwai, Ryouji, 5,702,764, Cl. 427-248.100.
Murofushi, Kanji; Homma, Taira; Nagura, Shigehiro; and Armentrout, Richard W., 5,702,927, Cl. 435-104.000.
Shin, Hyun Jong; and Xiao, Peter Hong, to International Business Machines Corporation. Fully differential self-biased signal receiver. 5,703,532, Cl. 330-253.000.
Shin, Hyun-Doo; Jo, Sung-O; and Nahm, Bon-Ju, to Samsung Electronics Co., Ltd. Method of operating a clothes washer in cold weather. 5,701,624, Cl. 8-159.000.
Shin, Jun-Chul, to Daewoo Electronics Co., Ltd. Apparatus for damping a door of refrigerator being open and/or closed. 5,702,168, Cl. 312-405.000.
Shin, Kwang Young: *See*—
Kim, Hyung Suk; and Shin, Kwang Young, 5,703,651, Cl. 348-416.000.
Shin, Woo-Sup, to LG Electronics Inc. Liquid crystal display device and method of forming the same. 5,703,668, Cl. 349-110.000.
Shindle, Jack: *See*—
Dynan, Stephen; Shindle, Jack; and Vayda, John, 5,702,997, Cl. 501-88.000.
Shinih Enterprise Co., Ltd.: *See*—
Chien, Jung-Fu, 5,702,801, Cl. 428-181.000.
Shinjo, Ryoichi: *See*—
Kaji, Naruhiko; Nakano, Yutaka; Nakata, Rempei; Harada, Minoru; Shinjo, Ryoichi; and Tsujimura, Manabu, 5,702,673, Cl. 422-186.070.
Shinohara, Kenji, to Sony Corporation. Method for manufacturing a semiconductor device with a metallic interconnection layer. 5,702,983, Cl. 437-195.000.
Shiono, Ryozo: *See*—
Okuma, Kiyoshi; Saegusa, Koichiro; and Shiono, Ryozo, 5,702,556, Cl. 156-261.000.
Shionogi & Co., Ltd.: *See*—
Numata, Yoshito; Asada, Hidehisa; Dohi, Keiji; Fukunaga, Takahiro; and Taniguchi, Yasushi, 5,702,910, Cl. 435-7.940.
Shionogi Seiyaku Kabushiki Kaisha: *See*—
Nishitani, Yasuhiro; Irie, Tadashi; and Nishino, Yutaka, 5,703,243, Cl. 548-541.000.
Shiozaki, Shizuo: *See*—
Suzuki, Fumio; Koike, Nobuaki; Shimada, Junichi; Nakamura, Joji; Shiozaki, Shizuo; Kitamura, Shigeto; Ichikawa, Shunji; Kase, Hiroshi; and Nonaka, Hiromi, 5,703,085, Cl. 514-263.000.
Shipley Company, L.L.C.: *See*—
Gronbeck, Dana A.; O'Connell, Kathleen M.; Burke, William Andrew; Gaudet, Michael N.; and Caporale, Stefan J., 5,702,611, Cl. 210-686.000.
Shipman, Mark S., to Intel Corporation. Computer method/apparatus for performing a basic input/output system (BIOS) power on test (POST) that uses three data patterns and variable granularity. 5,704,035, Cl. 395-183.180.
Shipston, Adele C.; Langen, Joseph W.; and Mitchell, Nancy G. Activated adhesive system. 5,702,771, Cl. 427-491.000.
Shirai, Hiroshi: *See*—
Uchida, Masaki; Naito, Takaki; Shirai, Hiroshi; Iino, Koichi; and Okazaki, Hiroyuki, 5,702,269, Cl. 439-496.000.
Shiraishi, Naomasa: *See*—
Hirukawa, Shigeru; Shiraishi, Naomasa; and Kameyama, Masaomi, 5,703,675, Cl. 355-53.000.
Shiratake, Shinichiro; Takashima, Daisaburo; Tsuchida, Kenji; and Inaba, Tsuneo, to Kabushiki Kaisha Toshiba. Semiconductor memory device. 5,703,817, Cl. 365-200.000.
Shire, Mary: *See*—
Muller, George W.; Shire, Mary; and Stirling, David I., 5,703,098, Cl. 514-339.000.
Shirk, Ryan C.: *See*—
Tompkins, Thomas L.; Shirk, Ryan C.; Schroeer, Steven C.; Merry, Richard P.; Ista, Troy K.; and Bloom, Richard L., 5,702,494, Cl. 55-498.000.
Shirodera, Tatsumi, to YKK Corporation. Parts feeder. 5,702,028, Cl. 221-166.000.
Shoemaker, Robert D.: *See*—
Nesbitt, Gregory S.; and Shoemaker, Robert D., 5,701,732, Cl. 60-39.000.
Shook, Stephen G.; Chun, Christopher K. Y.; and Schwartz, Daniel B., to Motorola. Signal processing method. 5,703,506, Cl. 327-87.000.
Shook, Stephen G.: *See*—
Chun, Christopher K. Y.; Shook, Stephen G.; and Ryan, Carl R., 5,703,504, Cl. 327-72.000.
Short, Stephen P.; and Lichtman, Philip R., to Elmwood Sensors, Inc. Thermostat with one-piece reset mechanism and contact assembly. 5,703,560, Cl. 337-348.000.
Shoup, Robert D.: *See*—
Bocko, Peter L.; Eid, Bernard A.; Johnson, Ronald E.; Lock, William E.; Shoup, Robert D.; and Themont, Jean-Pierre, 5,701,815, Cl. 101-211.000.
Shovlowsky, George Joseph: *See*—
Brodsky, William Louis; Herard, James Daniel; Macek, Thomas George; Sharp, Timothy Lee; and Shovlowsky, George Joseph, 5,703,331, Cl. 174-254.000.
Showa Denko K.K.: *See*—
Watanabe, Kazuyuki; Yanagihara, Hisayoshi; and Matsumoto, Shimako, 5,703,172, Cl. 525-323.000.
Shreve, Gregory A.; Guzzino, Kim S.; and Hulvey, Robert W., to TRW Inc. Digital phase error detector for locking to color subcarrier of video signals. 5,703,656, Cl. 348-549.000.
Shrive, Nigel G.: *See*—
McPherson, Roger W.; Shrive, Nigel G.; Damson, Erich; Frank, Cyril B.; Lhenen, Fred; and Schachar, Norman S., 5,701,913, Cl. 128-774.000.
Shroder, Terry A.: *See*—
Hartman, Daniel A.; Bright, Timothy L.; and Shroder, Terry A., 5,702,734, Cl. 425-534.000.
Shudo, Koichi; Sugioka, Tatsuo; Inazu, Mizuho; Tanaka, Hideyuki; Inoue, Tsutomu; and Kitamura, Kazuyuki, to Hoechst Japan Limited; and Koichi Shudo. Anti-osteopathic composition. 5,703,128, Cl. 514-563.000.
Shue, Shaulin: *See*—
Tsai, Chaochieh; Hsu, Shun-Liang; and Shue, Shaulin, 5,702,972, Cl. 437-56.000.
Shuler, James F.: *See*—
Mulligan, Shaun T.; Vandepas, Robert J.; Shuler, James F.; and Almasy, Lawrence, 5,701,925, Cl. 137-119.050.
Shults, Victor Danilovich: *See*—
Levankovskii, Igor Anatolyevich; Grinevitskii, Yurii Alexandrovich; Shults, Victor Danilovich; and Alexandrov, Yurii Victorovich, 5,702,160, Cl. 299-111.000.
Shumate, Monroe W.: *See*—
Martin, Phillip Charles; Shumate, Monroe W.; and Gregg, William Michael, 5,703,147, Cl. 523-212.000.
Shuster, Jeffrey R.: *See*—
Hastrup, Sven; Branner, Sven; Jørgensen, Birthe Ravn; Christensen, Tove; Jørgensen, Birgitte Bojer; Shuster, Jeffrey R.; Madden, Mark; Moyer, Donna L.; and Fuglsang, Claus, 5,702,934, Cl. 435-183.000.
Shute, Marcus W.: *See*—
Robertson, Derek Guy; and Shute, Marcus W., 5,703,990, Cl. 385-131.000.
SIBIA Neurosciences, Inc.: *See*—
McDonald, Ian A.; Whitten, Jeffrey P.; and Cosford, Nicholas D., 5,703,100, Cl. 514-343.000.
Sibley, James E.: *See*—
Cemenska, Richard A.; Coleman, Gerald N.; and Sibley, James E., 5,701,863, Cl. 123-198.00D.
SICO Incorporated: *See*—
Luedke, Thomas J.; Aagaard, Randy G.; Niemi, Carl A.; and Shea, Andrew J., 5,701,703, Cl. 52-36.500.
Sidwell, Steven C.; English, George J.; Garrison, Robert L.; and Johnson, Ralph J., to Osram Sylvania, Inc. Discharge lamp having light-transmissive conductive coating for RF containment and heating. 5,702,179, Cl. 362-255.000.
Siebelink, Robert John, Jr.; and Racine, Lloyd G., to Webasto Sunroofs Inc. Plastic panel assembly for use in a vehicle. 5,702,779, Cl. 428-14.000.
Siebert, Harry, to Siemens Aktiengesellschaft. Device for switching among clock signals allocated to a plurality of users. 5,703,507, Cl. 327-99.000.
Siemens Akiengesellschaft: *See*—
Wohlrab, Juergen; and Herbert, Manfred, 5,703,920, Cl. 378-4.000.
Siemens Aktiengesellschaft: *See*—
Bauer, Rudolf, 5,703,297, Cl. 73-756.000.
Bischof, Norbert, 5,703,926, Cl. 378-200.000.
Brunner, Heinrich, 5,703,384, Cl. 257-139.000.
Das, Chandan; Gaubatz, Ulrich; and Gottwald, Erich, 5,703,708, Cl. 359-140.000.
Fleck, Rod; and Boening, Werner, 5,704,048, Cl. 395-306.000.
Gantioler, Josef-Matthias; Heil, Holger; and Tihanyi, Jenoe, 5,703,521, Cl. 327-512.000.
Hau, Gerhard; Wistuba, Lothar; and Hollmann, Josef, 5,703,917, Cl. 376-280.000.
Hell, Erich; Kuhn, Helmut; and Hoernig, Mathias, 5,703,924, Cl. 378-136.000.
Heywang-Koebrunner, Sylvia, 5,702,405, Cl. 606-130.000.
Köhler, Wolfgang; Kral, Rudolf; and Wittchow, Eberhard, 5,701,850, Cl. 122-235.230.
Künemund, Thomas; and Hentschel, Klaus, 5,704,010, Cl. 395-3.000.
Nebel, Gerhard; Georgakos, Georg; and Kleine, Ulrich, 5,703,533, Cl. 330-253.000.
Preis, Josef, 5,703,765, Cl. 363-21.000.
Punzenberger, Manfred, 5,703,477, Cl. 323-313.000.
Rattner, Manfred, 5,703,922, Cl. 378-65.000.
Schneeberger, Stefan, 5,704,047, Cl. 395-200.650.
Sezi, Recai; Borndoerfer, Horst; Ahne, Hellmut; Birkle, Siegfried; Kuehn, Eberhard; Leuschner, Rainer; Rissel, Eva; and Sebald, Michael, 5,703,186, Cl. 526-272.000.
Siebert, Harry, 5,703,507, Cl. 327-99.000.
Zwack, Eduard, 5,703,480, Cl. 324-76.820.
Siemens Solar GmbH: *See*—
Endrös, Arthur; and Martinelli, Giuliano, 5,702,538, Cl. 136-258.000.

Siglinger, Paul R.: *See—*
Galloway, George G.; and Siglinger, Paul R., 5,703,928, Cl. 379-21.000.
Silicon Graphics, Inc.: *See—*
Nagy, Michael, 5,703,810, Cl. 365-189.050.
Voorhies, Douglas; and Foran, James, 5,704,028, Cl. 395-126.000.
Silva, Jose: *See—*
Brown, Gregory S.; Quach, Frank; and Silva, Jose, 5,702,262, Cl. 439-188.000.
Silver, Daniel J. Adjustable truss. 5,701,713, Cl. 52-645.000.
Silverman, Keith C.: *See—*
Jayasuriya, Hiranthi; Lingham, Russell B.; Pelaez, Fernando; Sanchez, Manuel; Silverman, Keith C.; Singh, Sheo Bux; and Zink, Deborah L., 5,703,067, Cl. 514-179.000.
Silverstein, Fred E., to University of Washington. Safe endoscopic accessory. 5,702,344, Cl. 600-104.000.
Silverstein, Louis D.: *See—*
Martin, Russel A.; Bruce, Richard H.; DaCosta, Victor M.; Fiske, Thomas G.; Lewis, Alan G.; Silverstein, Louis D.; Steemers, Hugo L.; Thompson, Malcolm J.; and Turner, William D., 5,703,621, Cl. 345-147.000.
Sim Associates: *See—*
Timmenga, Hubert J., 5,702,499, Cl. 71-9.000.
Sim, Jai-Hoon: *See—*
Lee, Kyu-Chan; and Sim, Jai-Hoon, 5,703,475, Cl. 323-313.000.
Siman, Walid. Scrub cleaning machine. 5,701,625, Cl. 15-21.100.
Simmonds Precision Products Inc.: *See—*
Spillman, William B., Jr.; and Durkee, Scott B., 5,703,576, Cl. 340-870.310.
Simmons, Daniel Cecil; Forsyth, Walter James; and Isley, Reggald Emory, to Simmons, Daniel Cecil; and Forsyth, Walter James. Direct drive gas compressor with vented distance piece. 5,702,238, Cl. 417-380.000.
Simmons, Donald L., to Draxis Health Inc. Gypsum removal composition and method of removing gypsum from skin. 5,702,693, Cl. 424-78.030.
Simmons, Roy, III: *See—*
Prutchi, David; and Simmons, Roy, III, 5,701,895, Cl. 128-630.000.
Simmons, Scott C.; Pohl, John R.; Guess, Terrell M.; Rushing, Douglas A.; Caputo, Michael P., Jr.; and Billica, Roger D., to Krug International. Telemedicine instrumentation pack. 5,701,904, Cl. 128-670.000.
Simoncelli, Eero; and Farid, Hany, to University of Pennsylvania, The Trustees of the. Single lens range imaging method and apparatus. 5,703,677, Cl. 356-4.040.
Simonds, Gary L., to Bear Archery, Inc. Archery bow with improved adjustable grip. 5,701,880, Cl. 124-88.000.
Simons, Michael John, to Eastman Kodak Company. Method of forming photographic relief images. 5,702,865, Cl. 430-264.000.
Simonswerk GmbH: *See—*
Jahnke, Wolfgang, 5,701,636, Cl. 16-238.000.
Simpson, Bret A. Hay recompression and netting machine. 5,701,723, Cl. 53-435.000.
Singh, Ajaib: *See—*
Rosenberg, Ronald Owen; Singh, Ajaib; Maupin, Christopher James; and Lombardo, Brian Scott, 5,703,193, Cl. 528-44.000.
Singh, Sheo Bux: *See—*
Jayasuriya, Hiranthi; Lingham, Russell B.; Pelaez, Fernando; Sanchez, Manuel; Silverman, Keith C.; Singh, Sheo Bux; and Zink, Deborah L., 5,703,067, Cl. 514-179.000.
Sipe, Stanley Wayne: *See—*
Allen, Ronald L.; Bishop-Jones, Brenda J.; Cykana, Michael J.; Lui, Eddie K.; and Sipe, Stanley Wayne, 5,703,781, Cl. 364-478.010.
Sipos, Stefan; and Jones, Gary V., to Kraft Foods, Inc. Process for decaffeinating aqueous caffeine-containing extracts. 5,702,747, Cl. 426-422.000.
Siriwardane, Ranjani V., to United States Department of Energy. Durable regenerable sorbent pellets for removal of hydrogen sulfide from coal gas. 5,703,003, Cl. 502-400.000.
Sivakumar, Ananthasubramanian: *See—*
Sommese, Anthony G.; and Sivakumar, Ananthasubramanian, 5,702,613, Cl. 210-708.000.
Sivilotti, Olivo Giuseppe; Leone, Gino Luigi; Sutherland, James Gordon; Thorburn, Herbert James; and Crosato, Bruno, to Alcan International Limited. Process and apparatus for applying and removing liquid coolant to control temperature of continuously moving metal strip. 5,701,775, Cl. 72-201.000.
Sjostedt, Robbie J.: *See—*
Grote, Philip B.; and Sjostedt, Robbie J., 5,702,151, Cl. 296-187.000.
SKB MGD, Institute of Physics: *See—*
Paramonov, Vladimir A.; Tychinin, Anatolij I.; Moroz, Anatolij I.; Birger, Boris L.; Frommann, Klaus; Haupt, Werner; and Ottersbach, Walter, 5,702,528, Cl. 118-623.000.
Skelly, Jon M.; and Wilski, Lawrence F., to Ford Motor Company. Method for identifying and protecting an activated plastic surface. 5,702,772, Cl. 427-536.000.
Skewes, Susan M.: *See—*
Martin, John P.; Skewes, Susan M.; and Raddatz, Russell E., 5,702,992, Cl. 442-123.000.
Skinner, Larkin P. Apparatus for the manufacture of a laminated web from recycled corrugated cardboard. 5,702,560, Cl. 156-512.000.
Skinner, Philip: *See—*
Colclough, Terence; Skinner, Philip; Woollins, John Derek; and Wood, Paul Thomas, 5,703,262, Cl. 558-112.000.
Skjaeveland, Magne; and Stangeland, Kjell-Egil, to Kverneland Klepp AS. Reversible Plough. 5,701,960, Cl. 172-219.000.
Skole, Jochen: *See—*
Hoffmann, Erwin; Lüdke, Christian; and Skole, Jochen, 5,703,342, Cl. 219-497.000.
Skorjanec, Joseph: *See—*
Taylor, Phillip A.; Florczak, Jeffrey M.; Peterson, Mark A.; Iverson, Paul R.; Skorjanec, Joseph; and Lorentz, Robert D., 5,702,876, Cl. 430-496.000.
Skoskiewicz, Andrzej: *See—*
Kamen, Dean L.; Ambrogi, Robert R.; Duggan, Robert J.; Heinzmann, Richard Kurt; Key, Brian R.; Skoskiewicz, Andrzej; and Kristal, Phyllis K., 5,701,965, Cl. 180-7.100.
Skubitz, Amy P. N.; and Furcht, Leo T., to University of Minnesota, Regents of the. Laminin a chain polypeptides from the amino terminal golbular domain. 5,703,205, Cl. 530-324.000.
SKW Trostberg Aktiengesellschaft: *See—*
Heidlas, Jürgen; and Cully, Jan, 5,703,228, Cl. 536-127.000.
Slater, Robert H.: *See—*
Lewis, Eric A.; and Slater, Robert H., 5,701,733, Cl. 60-39.310.
Slayton, Gerald D.: *See—*
Thomas, Brian J.; Slayton, Gerald D.; Heiman, Jerome R.; and Barnett, Rick, 5,702,841, Cl. 429-88.000.
Sleevi, Mark C.: *See—*
Peck, James V.; Minaskanian, Gevork; and Sleevi, Mark C., 5,703,104, Cl. 514-369.000.
Slemker, Tracy C., to Materials Engineering And Development, Inc. Valve assembly for a prosthetic limb. 5,702,489, Cl. 623-34.000.
Slimon, Scot A.: *See—*
Larson, Carl O., Jr.; Smith, James S.; Chapman, John H.; Slimon, Scot A.; John, Trahan D.; Robert, J. Brozek; Franco, Alberto; McGarvey, John J.; Rosen, Marvin E.; and Pasque, Michael K., 5,702,430, Cl. 607-1.000.
Sloan, Charles P.: *See—*
Felsenstein, Kevin; Smith, David W.; Poss, Michael A.; Chaturvedula, Prasad; and Sloan, Charles P., 5,703,129, Cl. 514-613.000.
Sloan-Kettering Institute for Cancer Research: *See—*
Blasberg, Ronald G.; and Tjuvajev, Juri, 5,703,056, Cl. 514-44.000.
Smagin, Alexandr Semenovich: *See—*
Korzhenkov, Petr Nikolaevich; Pyait, Jury Leonidovich; Smagin, Alexandr Semenovich; and Epshtein, Alexandr Lvovich, 5,703,603, Cl. 343-753.000.
Smalser, Paul, to Ocean Power Technologies. Power transfer of piezoelectric generated energy. 5,703,474, Cl. 323-299.000.
Smayling, Michael C.; Santin, Giovanni; and Marotta, Giulio, to Texas Instruments Incorporated. EEPROM with enhanced reliability by selectable V_{pp} for write and erase. 5,703,807, Cl. 365-185.030.
Smeets, Patrick E. G., to U.S. Philips Corporation. Power supply apparatus with improved efficiency. 5,703,763, Cl. 363-20.000.
Smiley, Gregory B., to Bonar Packaging, Inc. Method for making a heavy duty bag having an easy opening spout. 5,702,339, Cl. 493-196.000.
Smillie, Allan M.: *See—*
Kundrat, David M.; Smillie, Allan M.; and Sussman, Richard C., 5,702,502, Cl. 75-501.000.
Smith, Adlai H.; Hunter, Robert O., Jr.; McArthur, Bruce; Blair, Steven; and Wilkinson, Jim, to Litel Instruments, Inc. Process for ablating high density vias in flexible substrate. 5,702,662, Cl. 264-400.000.
Smith, Alan Keith; Monk, John Frederick; and Tolley, Robert Frank, to Magneti Marelli UK Limited. Lamp assembly comprising a ventilation passage. 5,702,178, Cl. 362-294.000.
Smith & Nephew, Inc.: *See—*
Carls, Thomas A.; Melkent, Tony; Whiteside, Leo A.; and Vendrely, Tim, 5,702,460, Cl. 623-20.000.
Lackey, Jennifer J.; Pothier, Albert J.; Carls, Thomas A.; Johnson, Chris E.; and Elliott, Scott, 5,702,464, Cl. 623-20.000.
Pothier, Albert; Marik, Gregory C.; and Givens, Derrick, 5,702,463, Cl. 623-20.000.
Smith & Nephew Richards France: *See—*
Hummer, Jacques; Dive, Michel; Laurençon, Michel; and Clauze, Jacques, 5,702,459, Cl. 623-20.000.
Smith & Nephew Richards, Inc.: *See—*
Taylor, Harold S.; and Taylor, J. Charles, 5,702,389, Cl. 606-54.000.
Smith, Brenton L., to Brenton Engineering Co. Packaging apparatus for non-round containers. 5,701,726, Cl. 53-544.000.
Smith, Clifford; and Fuller, Carl, to Amersham International PLC. Nucleoside analogue method. 5,702,925, Cl. 435-91.100.
Smith, Clifford Wayne: *See—*
Brocious, George Dale; Smith, Clifford Wayne; and Snyder, Wayne Carl, 5,701,693, Cl. 37-381.000.
Smith, Daniel; Willis, Bernard M.; Marschke, Kenneth P., Jr.; Littlewood, Barry; Schoen, Vulgens; Gucker, Carl; Nordmeyer, Michael; and Miklewicz, Thaddeus, to Ethicon, Inc. Process for manufacturing taper point surgical needles. 5,701,656, Cl. 29-558.000.
Smith, David W.: *See—*
Felsenstein, Kevin; Smith, David W.; Poss, Michael A.; Chaturvedula, Prasad; and Sloan, Charles P., 5,703,129, Cl. 514-613.000.
Smith, Edward Freer, III: *See—*
Rogers, Dan Paul; and Smith, Edward Freer, III, 5,702,252, Cl. 433-173.000.
Smith, Eric: *See—*

Kanjo, Wajih; Smith, Eric; Demoise, Thomas J.; Girotti, Michael; McCabe, Thomas; Fessler, Charles B.; and Natschke, Scott, 5,701,974, Cl. 188-1.11R.
Smith, Gregory C.; and Boysel, Robert M., to Texas Instruments Incorporated. Support post architecture for micromechanical devices. 5,703,728, Cl. 359-871.000.
Smith, Gregory J., to National Semiconductor Corporation. Methods and apparatus for protecting battery cells from overcharge. 5,703,463, Cl. 320-13.000.
Smith, Henry Roy. Sealing apparatus. 5,702,111, Cl. 277-228.000.
Smith, James S.: *See—*
Larson, Carl O., Jr.; Smith, James S.; Chapman, John H.; Slimon, Scot A.; John, Trahan D.; Robert, J. Brozek; Franco, Alberto; McGarvey, John J.; Rosen, Marvin E.; and Pasque, Michael K., 5,702,430, Cl. 607-1.000.
Smith, James W.; and Tran, Hoc Nghia, to Thor Technology Corporation. Process of producing sodium hydroxide from sodium sulphate in a pulp mill. 5,702,570, Cl. 162-30.100.
Smith, Jeffrey P.: *See—*
Hutter, Louis N.; and Smith, Jeffrey P., 5,702,959, Cl. 437-31.000.
Smith, John Michael. Pet door for screen applications. 5,701,813, Cl. 160-180.000.
Smith, Kevin R.: *See—*
Lewis, Michael E.; Kauer, James C.; Smith, Kevin R.; Callison, Kathleen V.; Baldino, Frank; Neff, Nicola; and Iqbal, Mohamed, 5,703,045, Cl. 514-12.000.
Smith, Paul H.; Brainard, James R.; Jarvinen, Gordon D.; and Ryan, Robert R., to United States of America, Energy. Nuclear magnetic resonance contrast agents. 5,702,683, Cl. 424-9.361.
Smith, Philip J. Hands free cordless phone caddy. 5,703,945, Cl. 379-428.000.
Smith, Thomas G.; Winter, Kirt Alan; and Kuracz, Frank Anthony, to Hewlett-Packard Company. Adaptive color rendering by an inkjet printer based on object type. 5,704,021, Cl. 395-109.000.
Smolarek, James: *See—*
Schaub, Herbert Raymond; and Smolarek, James, 5,702,504, Cl. 95-101.000.
Snider, Chris Ralph; and Osman, Kerwin Craig, to Delco Electronics Corporation. Illuminated push button display. 5,703,625, Cl. 345-168.000.
Snoeren, Rudolph M.; and Vugts, Coenraad A.A.M., to U.S. Philips Corporation. Imaging device with anti-condensation provision. 5,703,352, Cl. 250-208.100.
Snustad, Daniel C.: *See—*
Johnson, Gilbert C.; Radcliffe, Marc D.; Savu, Patricia M.; Snustad, Daniel C.; and Spawn, Terence D., 5,702,637, Cl. 252-299.610.
Snyder, Thomas D.; and Wakefield, I. Nelson, to Ericsson Inc. Electronic device casing including living spring button and method. 5,703,758, Cl. 361-752.000.
Snyder, Wayne Carl: *See—*
Brocious, George Dale; Smith, Clifford Wayne; and Snyder, Wayne Carl, 5,701,693, Cl. 37-381.000.
So, Hangyick: *See—*
Cherry, Isaac R.; Bachman, John A.; Tanaka, David T.; So, Hangyick; and Henkin, Raphael, 5,701,894, Cl. 128-630.000.
Soares, Marcelo Bento: *See—*
Bonaldo, Maria DeFatima; and Soares, Marcelo Bento, 5,702,898, Cl. 435-6.000.
Sobue, Susumu; Yamauchi, Takeshi; and Mukainakano, Shinichi, to Nippondenso Co., Ltd. Electrode for semiconductor device and method for producing the same. 5,703,403, Cl. 257-751.000.
Societe Civile Chenier: *See—*
Cormouls-Houles, Jacky, 5,702,751, Cl. 426-629.000.
Societe de Developpment de L'Industrie Agro-Alimentaire et de la Pepiniere Europeenne - Sodiape: *See—*
Darbonne, Luc, 5,702,750, Cl. 426-615.000.
Societe Nationale d'Etude et de Construction de Moteurs d'Aviation "Snecma": *See—*
Charbonnel, Jean-Louis; Franchet, Michel; and Naudet, Jacky Serge, 5,702,217, Cl. 411-909.000.
Södervall, Maria-Liisa: *See—*
Karjalainen, Arto Johannes; Södervall, Maria-Liisa; Kalapudas, Arja Marketta; Pelkonen, Reino Olavi; Laine, Aire Maria; Lammintausta, Risto Arvo Sakari; and Salonen, Jarmo Sakari, 5,703,109, Cl. 514-383.000.
Sodeyama, Hideo: *See—*
Matsuhashi, Kunihiko; Sodeyama, Hideo; and Inakoshi, Daisuke, 5,702,192, Cl. 400-613.000.
Soest, Jon F., to U.S. Natural Resources, Inc. Lumber defect scanning including multi-dimensional pattern recognition. 5,703,960, Cl. 382-141.000.
Sofamor Danek Group: *See—*
Rabbe, Louis-Marie; Boyd, Lawrence M.; Chevalier, Jean-Louis; and Moreau, Jean-Charles, 5,702,453, Cl. 623-17.000.
Sofamor S.N.C.: *See—*
Argenson, Claude; de Peretti, Ferdinand; and Hovorka, Istvan, 5,702,452, Cl. 623-17.000.
Hopf, Christoph, 5,702,395, Cl. 606-61.000.
Sogabe, Kiyoshi: *See—*
Nishimura, Masayuki; Sogabe, Kiyoshi; Tanaka, Hiroyuki; and Arai, Shinji, 5,702,784, Cl. 428-34.900.
Sohn, Erich: *See—*
Rösch, Wolfgang; Sohn, Erich; Bauer, Klaus; and Bieringer, Hermann, 5,703,008, Cl. 504-106.000.
Solal, Marc; Ventura, Pascal; and Hode, Jean-Michel, to Thomson-CSF. Surface-wave distributed acoustic reflection transducer and filter including such a transducer. 5,703,427, Cl. 310-313.00D.
Soltis, Dennis A.: *See—*
Thomas, Christopher P.; McCombie, Jay C.; Weber, Gregory T.; Ehlers, Jeffery C.; and Soltis, Dennis A., 5,701,865, Cl. 123-339.110.
Solvay S.A.: *See—*
Dehennau, Claude; Depireux, Thierry; Fleche, Guy; Gosset, Serge; and Videau, Didier, 5,703,160, Cl. 525-54.240.
Sommerauer, Alois: *See—*
Adler, Klaus; Gubisch, Erwin; and Sommerauer, Alois, 5,702,828, Cl. 428-540.000.
Sommese, Anthony G.; and Sivakumar, Ananthasubramanian, to Nalco Chemical Company. Polymers containing vinylamine/vinylformamide as demulsifiers in oily wastewaters. 5,702,613, Cl. 210-708.000.
Son, Seok-bong: *See—*
Kim, Chang-seob; Son, Seok-bong; Kim, Sang-kyun; and Jeong, Bong-uk, 5,703,429, Cl. 313-346.00R.
Sonderegger, Marcel, to United States Surgical Corporation. Method and apparatus for needle-suture attachment. 5,701,664, Cl. 29-822.000.
Sonetsuji, Noboru: *See—*
Komiyama, Manabu; Sato, Shunichi; Sonetsuji, Noboru; Ishizaka, Tetsuo; and Yokoi, Saeko, 5,703,893, Cl. 372-43.000.
Song, Jae Myong, to Hyundai Motor Company. Structure for connecting a stablizer bar and lower control arm to each other. 5,702,121, Cl. 280-689.000.
Songer, Christopher Mark: *See—*
Ethington, Bryan Leslie; Gostomski, John Francis; Minnick, Jeffrey Alan; and Songer, Christopher Mark, 5,704,022, Cl. 395-115.000.
Songer, Matthew N.: *See—*
Kilpela, Thomas S.; Iwanski, George J.; Songer, Matthew N.; and Songer, Robert J., 5,702,399, Cl. 606-72.000.
Songer, Robert J.: *See—*
Kilpela, Thomas S.; Iwanski, George J.; Songer, Matthew N.; and Songer, Robert J., 5,702,399, Cl. 606-72.000.
Sonnenburg, William K.: *See—*
Beavo, Joseph A.; Corbin, Jackie D.; Ferguson, Kenneth M.; Francis, Sharron H.; Kadlecek, Ann; Loughney, Kate; McAllister-Lucas, Linda M.; Sonnenburg, William K.; and Thomas, Melissa K., 5,702,936, Cl. 435-196.000.
Sono, Michio; Tsuji, Kazuto; Sakoda, Hideharu; Suzuki, Yoshimi; and Sakuma, Masao, to Fujitsu Limited. Semiconductor integrated circuit device and method of producing the semiconductor integrated circuit device. 5,703,398, Cl. 257-706.000.
Sony Chemicals Corp.: *See—*
Fujimoto, Masahiro; and Orihara, Katsuhisa, 5,703,573, Cl. 340-825.540.
Sony Corporation: *See—*
Ando, Ryo, 5,703,851, Cl. 369-47.000.
Doi, Masato; Narui, Hironobu; and Nakao, Takashi, 5,703,863, Cl. 369-112.000.
Hino, Ichiro; and Imazaki, Kazunori, 5,703,947, Cl. 379-419.000.
Horigome, Toshihiro; and Kobayashi, Seiji, 5,703,853, Cl. 369-48.000.
Horiuchi, Yoshiro, 5,702,280, Cl. 445-23.000.
Iwahashi, Naoto, 5,704,006, Cl. 395-2.680.
Iwasaki, Jun, 5,703,527, Cl. 329-336.000.
Kawamoto, Seiichi, 5,703,355, Cl. 250-214.100.
Kondo, Tetsujiro, 5,703,649, Cl. 348-408.000.
Kondo, Tetsujiro; Fujimori, Yasuhiro; Takahashi, Kenji; and Kawaguchi, Kunio, 5,703,652, Cl. 348-421.000.
Kumagai, Eiji, 5,703,852, Cl. 369-48.000.
Kuroda, Hirokazu; and Ando, Ryo, 5,703,854, Cl. 369-50.000.
Maruoka, Kazuhisa; and Morota, Etsuko, 5,703,657, Cl. 348-554.000.
Matsuda, Osamu, 5,703,861, Cl. 369-110.000.
Mitchell, Michael L.; Fite, Barry Alan; Saito, Akiya; and New, Anthony C., 5,703,858, Cl. 369-58.000.
Muchi, Tsuneo; Kono, Yoji; and Shimizu, Kano, 5,702,526, Cl. 118-213.000.
Noda, Hidenobu, 5,703,849, Cl. 369-44.290.
Oda, Tsuyoshi, 5,703,646, Cl. 348-401.000.
Ohmura, Taro, 5,702,757, Cl. 427-131.000.
Shinohara, Kenji, 5,702,983, Cl. 437-195.000.
Tahara, Katsumi; Koyanagi, Hideki; Yagasaki, Yoichi; and Fujinami, Yasushi, 5,703,859, Cl. 369-84.000.
Watari, Masao; Ishii, Kazuo; Kato, Yasuhiko; Ogawa, Hiroaki; Omote, Masanori; Watanabe, Kazuo; and Minamino, Katsuki, 5,704,013, Cl. 395-23.000.
Yasuda, Minoru; and Maki, Yasuhito, 5,703,386, Cl. 257-230.000.
Sorg, Clemens: *See—*
Odink, Karel Gerrit; Clerc, Roger; Cerletti, Nico; Brüggen, Josef; Tarcsay, Lajos; Sorg, Clemens; and Wiesendanger, Walter, 5,702,920, Cl. 435-69.500.
Sorin Biomedical Inc.: *See—*
Witherspoon, Leland; Buckberg, Gerald D.; and Akopian, Paul, 5,702,358, Cl. 604-4.000.
Sorkin, Felix L. Bonded slab post-tension system. 5,701,707, Cl. 52-223.130.
Soules, Thomas F.: *See—*
Kachmarik, David J.; Soules, Thomas F.; Fillion, Raymond A.; Steinbrenner, Erwin G.; and Kuk, Donald W., 5,703,440, Cl. 315-56.000.

Soung, Gwang-Geong, to Hyundai Motor Company, Ltd. Method and device for measuring slope of driving road. 5,703,776, Cl. 364-424.094.
Southeastern Univ. Research Assn.: *See—*
Myneni, Ganapati Rao, 5,703,281, Cl. 73-40.700.
Southpac Trust International, Inc.: *See—*
Weder, Donald E., 5,701,720, Cl. 53-397.000.
Weder, Donald E.; and Corbett, Sue, 5,701,721, Cl. 53-397.000.
Spada, Valter, to Sasib S.p.A. Processing machine, particularly a packing machine for cigarettes or similar. 5,701,718, Cl. 53-201.000.
Spangler Candy Company: *See—*
Jones, Wayne H., 5,702,742, Cl. 426-115.000.
Spangler, John M., to Caterpillar Inc. Method of using water soluble foamed starch for reclaiming paint over-spray particles. 5,702,516, Cl. 106-287.330.
Spaniol, Sylvia: *See—*
Desgrandchamps, Francois; Eugene, Michel; Gitrens, Nico; Muller, Fernand; and Spaniol, Sylvia, 5,701,746, Cl. 62-62.000.
Spawn, Terence D.: *See—*
Johnson, Gilbert C.; Radcliffe, Marc D.; Savu, Patricia M.; Snustad, Daniel C.; and Spawn, Terence D., 5,702,637, Cl. 252-299.610.
Speaks, Jackie M.: *See—*
McKibben, Kenneth D.; Gould, Alan P.; Wuepper, Thomas E.; Minor, Daniel D.; Salgat, Mark T.; Marthaler, David; Speaks, Jackie M.; Macheske, Robert L.; Good, David; Gillette, Richard A.; Bond, Philip L.; Coyle, Donald C.; Rentfrow, Darrell; Stiens, Thomas O.; and Stevens, Larry M., 5,701,945, Cl. 164-130.000.
Spears, Louis E.: *See—*
Baumann, Frederick B.B.; and Spears, Louis E., 5,702,263, Cl. 439-331.000.
Speciality Filaments, Inc.: *See—*
O'Brien, Timothy D., 5,701,629, Cl. 15-207.200.
Specialty Group Industries, Inc.: *See—*
Jablonski, Paul L.; and Rodriguez, Charles, 5,701,845, Cl. 119-166.000.
Spectra-Physics Scanning Systems, Inc.: *See—*
Reddersen, Brad R.; Shepard, Phillip W.; Moch, Rockie D.; and Williams, Jon Paul Charles, 5,703,347, Cl. 235-472.000.
Spectral Diagnostics: *See—*
Takahashi, Miyoko; and Jackowski, George, 5,702,905, Cl. 435-7.100.
Spectrol Electronics Corporation: *See—*
Riley, Richard E., 5,702,653, Cl. 264-61.000.
Spence, Christopher A., to Advanced Micro Devices, Inc. Mask for optical lithography using phase shift masking and integrated circuit produced therefrom. 5,702,848, Cl. 430-5.000.
Spillman, William B., Jr.; and Durkee, Scott R., to Simmonds Precision Products Inc. Embeddable DC power supply for smart structure sensors. 5,703,576, Cl. 340-870.310.
Spouring, Otto: *See—*
Hankinson, Robert J.; and Spouring, Otto, 5,703,640, Cl. 348-638.000.
Sprenger, Michael Kent: *See—*
Wieczorek, Alfred B.; Jones, Thomas Mark; and Sprenger, Michael Kent, 5,703,479, Cl. 324-73.100.
Springer, Bonnie L. Bath toy storage unit. 5,702,003, Cl. 206-457.000.
Springs Window Fashions Division, Inc.: *See—*
Kutchmarek, Darrell J.; and Stauffacher, James H., 5,702,552, Cl. 156-197.000.
Spyrus, Inc.: *See—*
Dolphin, Janet L., 5,703,951, Cl. 380-25.000.
Squier, Steven Eric: *See—*
Severson, Mark Hamilton; and Squier, Steven Eric, 5,701,755, Cl. 62-402.000.
Sridhar, Sidney, to Seabulk Systems Inc. Materials handling system. 5,702,221, Cl. 414-142.300.
Srinivasan, Sanjay, to Ethyl Corporation. Lubricants with enhanced low temperature properties. 5,703,023, Cl. 508-468.000.
Srock, James D.: *See—*
Hete, Bernie F.; and Srock, James D., 5,701,883, Cl. 128-204.260.
Stacey, Eric J., to Electric Power Research Institute, Inc. Apparatus and method to prevent saturation of interphase transformers. 5,703,767, Cl. 363-40.000.
Stadelmann, Peter Werner: *See—*
Brem, Ernst; Ulrich, Roland; and Stadelmann, Peter Werner, 5,701,731, Cl. 60-39.020.
Stafford, Donald W.: *See—*
Bracken, Peter W.; Brener, Jeffery R.; DiGirolamo, Martin V.; Mullinix, Sam E., Jr.; Stafford, Donald W.; and Wallin, Peter E., 5,702,812, Cl. 428-323.000.
Stahl, Peter Heinrich; and Gamboni, Claudio, to Ciba-Geigy Corporation. Process for the preparation of an oral solid dosage form containing diclofenac. 5,702,724, Cl. 424-465.000.
Staktek Corporation: *See—*
Burns, Carmen D., 5,702,985, Cl. 437-217.000.
Stammler, Sonja: *See—*
Dunn, Youlu; Dochniak, Michael J.; and Stammler, Sonja, 5,703,158, Cl. 524-840.000.
Standard Oil Company, The: *See—*
Mazanec, Terry J.; and Cable, Thomas L., 5,702,999, Cl. 501-152.000.
Wachtendorf, Paul Trigg; Godbole, Sanjay Parushottam; and Rinker, Jeffrey Earle, 5,703,268, Cl. 558-466.000.
Standard Products Company, The: *See—*
Vaughan, Robert A.; Christian, Willard C.; Zimmer, John P.; and Mistopoulos, James E., 5,702,148, Cl. 296-146.900.
Stanford, Margaret E.: *See—*
Giesler, Richard; Geissler, Ulrich C.; Stanford, Margaret E.; and Johnson, William E., 5,702,383, Cl. 604-409.000.
Stangeland, Kjell-Egil: *See—*
Skjaeveland, Magne; and Stangeland, Kjell-Egil, 5,701,960, Cl. 172-219.000.
Stangeland, Maynard L.: *See—*
Fisher, Steven C.; Adams, Theodore C.; Stangeland, Maynard L.; Rietdyk, Jacob; and Winans, Paul R., 5,701,670, Cl. 29-890.010.
Stangler, Ulf: *See—*
Rommel, Reiner; and Stangler, Ulf, 5,701,946, Cl. 164-201.000.
Stankovic, Charles J.: *See—*
DeWitt, Sheila H. H.; Kell, Michael; Pavia, Michael R.; Kiely, John S.; Schroeder, Mel C.; Stankovic, Charles J.; and Ware, Steven, 5,702,672, Cl. 422-131.000.
Stanssens, Dirk: *See—*
Gillis, Herbert Russell; Stanssens, Dirk; De Vos, Rik; Postema, Aaldrik Roelf; and Randall, David, 5,703,136, Cl. 521-128.000.
Stapert, Curtis Allen: *See—*
Whitson, Duane Eugene; O'Connor, Michael Joseph; and Stapert, Curtis Allen, 5,702,254, Cl. 439-57.000.
State Of Israel Ministry Of Defense, Rafael-Armaments: *See—*
Maytal, Ben-Zion, 5,702,435, Cl. 607-104.000.
Stauffacher, James H.: *See—*
Kutchmarek, Darrell J.; and Stauffacher, James H., 5,702,552, Cl. 156-197.000.
Stauffer, Craig M.: *See—*
Peterson, William R.; and Stauffer, Craig M., 5,702,767, Cl. 427-407.100.
Stauffer, Werner: *See—*
Rotzinger, Bruno; Schmutz, Thomas; Brunner, Martin; and Stauffer, Werner, 5,703,149, Cl. 524-116.000.
Stauner, Thomas: *See—*
Fryberg, Mario; Göttel, Otto; and Stauner, Thomas, 5,702,866, Cl. 430-264.000.
Stebe, Robert F.: *See—*
Badour, Leonard C.; Stebe, Robert F.; and Haller, John L., 5,702,065, Cl. 242-342.000.
Stecker, Philip P.; and Liethen, Christine M., to CH2M Hill, Inc. Well head for environmental extraction wells. 5,701,953, Cl. 166-75.130.
Stedman, Donald H.; and Meeks, Patti A., to Colorado Seminary. Method to detect phosphorus. 5,702,954, Cl. 436-103.000.
Steemers, Hugo L.: *See—*
Martin, Russel A.; Bruce, Richard H.; DaCosta, Victor M.; Fiske, Thomas G.; Lewis, Alan G.; Silverstein, Louis D.; Steemers, Hugo L.; Thompson, Malcolm J.; and Turner, William D., 5,703,621, Cl. 345-147.000.
Steenblock, Roland Eugen; Kock, Norbert Franz; and Fiedler, Detlef Herbert, to Elf Atochem Deutschland GmbH. Polymer mixture and films prepared therefrom. 5,703,161, Cl. 525-66.000.
Stefanchik, David: *See—*
Wales, Kenneth S.; Paraschac, Joseph F.; and Stefanchik, David, 5,702,408, Cl. 606-139.000.
Steigerwald, Robert Louis; Saj, Chester Frank; and Stevanovic, Ljubisa Dragoljub, to General Electric Company. Multi-function filament-heater power supply for an electronic ballast for long-life dimmerable lamps. 5,703,441, Cl. 315-307.000.
Stein, Inc.: *See—*
London, Eugene J., 5,702,245, Cl. 432-14.000.
Stein, Richard L.: *See—*
Kern, John J.; Stein, Richard L.; and Wildrick, J. Preston, 5,701,893, Cl. 128-206.240.
Steinbrecher, Lester: *See—*
White, Robert Ashton; and Steinbrecher, Lester, 5,702,759, Cl. 427-142.000.
Steinbrenner, Erwin G.: *See—*
Kachmarik, David J.; Soules, Thomas F.; Fillion, Raymond A.; Steinbrenner, Erwin G.; and Kuk, Donald W., 5,703,440, Cl. 315-56.000.
Steiner, Gerd; Munschauer, Rainer; Unger, Liliane; Teschendorf, Hans-Jürgen; and Höger, Thomas, to BASF Aktiengesellschaft. N-substituted azabicycloalkane derivatives, their preparation and use. 5,703,091, Cl. 514-300.000.
Steinke, Gerhard: *See—*
Fels, Peter; Wüstenhagen, Ulf; and Steinke, Gerhard, 5,703,955, Cl. 381-18.000.
Steinl, Gregory: *See—*
McClish, Michael A.; Lynch, Marvin L.; Selfe, Margaret A.; Steinl, Gregory; and Remboski, Donald J., Jr., 5,703,283, Cl. 73-116.000.
Steinman, Joseph Richard, to Whitaker Corporation, The. Ultra low profile board-mounted modular jack. 5,702,271, Cl. 439-676.000.
Stelmar, Hilary: *See—*
Fishback, Gary M.; Egan, Dennis M.; and Stelmar, Hilary, 5,702,199, Cl. 404-17.000.
Stennett, Patrick G., to Lisco, Inc. Game racket with primary and secondary yokes. 5,702,313, Cl. 473-546.000.
Stephan, Günter, to Heidelberger Druckmaschinen AG. Sheet transfer drum. 5,701,819, Cl. 101-409.000.
Stephan, Ronan: *See—*
Feral, Thierry; Fromont, Bernard; Stephan, Ronan; Sernit, Eric; and Lacour, Olivier, 5,703,425, Cl. 310-366.000.

Stephens, Donald L., to PACCAR Inc. Frame beaming reduction assembly. 5,701,969, Cl. 180-300.000.
Sterling, Anthony P.; and Palmero, Albert, to Anthony R. Sterling and Tri-tech, Inc. Motorized suction punch forceps. 5,702,420, Cl. 606-205.000.
Sterman, Wesley D.: *See—*
Stevens, John H.; Sterman, Wesley D.; Gifford, Hanson S., III; and Machold, Timothy R., 5,702,368, Cl. 604-171.000.
Stern, Michael K.; Cheng, Brian K.; Ebner, Jerry R.; and Riley, Dennis P., to Monsanto Company. Process for preparing N-phosphonomethylamino carboxylic acids. 5,703,273, Cl. 562-16.000.
Stern, Roger A.; Panescu, Dorin; and Swanson, David K., to EP Technologies, Inc. Non-linear control systems and methods for heating and ablating body tissue. 5,702,386, Cl. 606-34.000.
Sternberg, Hal: *See—*
Segall, Paul E.; Sternberg, Hal; Waitz, Harold D.; and Segall, Judith M., 5,702,880, Cl. 435-1.200.
Stevanovic, Ljubisa Dragoljub: *See—*
Steigerwald, Robert Louis; Saj, Chester Frank; and Stevanovic, Ljubisa Dragoljub, 5,703,441, Cl. 315-307.000.
Stevens, Eric G., to Eastman Kodak Company. Self-aligned LOD antiblooming structure for solid-state imagers. 5,702,971, Cl. 437-53.000.
Stevens, Eric Gordon, to Eastman Kodak Company. Full depletion mode clocking of solid-state image sensors for improved MTF performance. 5,703,642, Cl. 348-317.000.
Stevens, John H.; Sterman, Wesley D.; Gifford, Hanson S., III; and Machold, Timothy R., to Heartport, Inc. System for cardiac procedures. 5,702,368, Cl. 604-171.000.
Stevens, Larry M.: *See—*
McKibben, Kenneth D.; Gould, Alan P.; Wuepper, Thomas E.; Minor, Daniel D.; Salgat, Mark T.; Marthaler, David; Speaks, Jackie M.; Macheske, Robert L.; Good, David; Gillette, Richard A.; Bond, Philip L.; Coyle, Donald C.; Rentfrow, Darrell; Stiens, Thomas O.; and Stevens, Larry M., 5,701,945, Cl. 164-130.000.
Stewart, J. Marcus: *See—*
Sutterlin, Philip H.; Stewart, J. Marcus; and Hurlbut, Amy O., 5,703,766, Cl. 363-35.000.
Stewart, Robert A., to Lear Corporation. Method and system for wear testing a seat by simulating human seating activity and robotic human body simulator for use therein. 5,703,303, Cl. 73-866.400.
Stibal, Werner: *See—*
Kaegi, Werner; Stibal, Werner; Schaech, Gunther; Straub, Rainer; and Schmidt, Gerhard, 5,701,644, Cl. 28-220.000.
Stickel, Ernst, to Bosch-Siemens Hausgeraete GmbH. Water-conducting household appliance. 5,701,952, Cl. 165-168.000.
Stidham, Robert Emerson: *See—*
Sherry, Alan Edward; Connor, Daniel Stedman; Stidham, Robert Emerson; and Vinson, Phillip Kyle, 5,703,033, Cl. 510-237.000.
Stiens, Thomas O.: *See—*
McKibben, Kenneth D.; Gould, Alan P.; Wuepper, Thomas E.; Minor, Daniel D.; Salgat, Mark T.; Marthaler, David; Speaks, Jackie M.; Macheske, Robert L.; Good, David; Gillette, Richard A.; Bond, Philip L.; Coyle, Donald C.; Rentfrow, Darrell; Stiens, Thomas O.; and Stevens, Larry M., 5,701,945, Cl. 164-130.000.
Stiles, James Alexander Robert: *See—*
Wu, Xingwei; Stiles, James Alexander Robert; Foo, Ken Kok; and Bailey, Phillip, 5,702,565, Cl. 156-643.100.
Stilz, Hans Ulrich: *See—*
Klingler, Otmar; Zoller, Gerhard; Jablonka, Bernd; Just, Melitta; Breipohl, Gerhard; Knolle, Jochen; König, Wolfgang; and Stilz, Hans Ulrich, 5,703,050, Cl. 514-18.000.
Sting, Donald W.; and Milosevic, Milan, to ASI Applied Systems, L.L.C. Optical sensing with crystal assembly sensing tip. 5,703,366, Cl. 250-341.200.
Stirling, David I.: *See—*
Muller, George W.; Shire, Mary; and Stirling, David I., 5,703,098, Cl. 514-339.000.
Stivison, Lloyd: *See—*
Novak, John; and Stivison, Lloyd, 5,701,990, Cl. 198-604.000.
Stockhoff, Brian: *See—*
Schnepf, H. Ernest; Stockhoff, Brian; and Knuth, Mark, 5,702,703, Cl. 424-93.461.
Stokoe, Philip T.: *See—*
Provencher, Daniel B.; Stokoe, Philip T.; and Gailus, Mark W., 5,702,258, Cl. 439-79.000.
Stoll, Alfred; Gulitz, Wolfgang; Tessari, Hans; and Eckhardt, Reiner, to Bodenseewerk Gerätetechnik GmbH. Seeker head particularly for automatic target tracking. 5,702,068, Cl. 244-3.160.
Stone, Glynnis E.: *See—*
Whipple, Terry L.; and Stone, Glynnis E., 5,702,469, Cl. 623-21.000.
Stone, Kevin R. Anterior cruciate ligament repair method. 5,702,422, Cl. 606-232.000.
Stone, Kevin Thomas: *See—*
Hoenig, Johannes Franz; and Stone, Kevin Thomas, 5,702,396, Cl. 606-69.000.
Stone, Michael D.: *See—*
O'Neal, Alan D.; Stone, Michael D.; and Coles, Carl R., 5,702,240, Cl. 418-9.000.
Stone, Robert E.: *See—*
Gardner, Cynthia M.; Stone, Robert E.; Duffy, John D.; Allen, William E.; and Schimpf, James E., 5,701,793, Cl. 91-361.000.
Stoney, Arthur: *See—*
Anderson, John Neil; and Stoney, Arthur, 5,702,297, Cl. 454-213.000.
Storb, Rainer: *See—*
Nash, Richard A.; and Storb, Rainer, 5,702,919, Cl. 435-69.500.
Stork Contiweb B.V.: *See—*
Logtens, Gerardus M. C. J.; and Scheepens, Franciscus G. M., 5,702,043, Cl. 226-92.000.
Stormtreat Systems, Inc.: *See—*
Horsley, Scott W.; and Platz, Winfried, 5,702,593, Cl. 210-122.000.
Story, C. Brad: *See—*
Goble, E. Marlowe; Luman, David P.; Chervitz, Alan; Story, C. Brad; and Gundlalpalli, Ramarao, 5,702,397, Cl. 606-72.000.
Stotz, Wolf Gunter: *See—*
Renn, Sandra; and Stotz, Wolf Gunter, 5,702,337, Cl. 492-7.000.
Stoughton Composites, Inc.: *See—*
Grote, Philip B.; and Sjostedt, Robbie J., 5,702,151, Cl. 296-187.000.
Stowell, Davin: *See—*
Kennedy, Timothy J.; Stowell, Davin; and Bolden, Scott, 5,702,061, Cl. 241-93.000.
Stracker, Elaine C.: *See—*
Gaeta, Federico C. A.; Galan, Adam Antoni; and Stracker, Elaine C., 5,703,116, Cl. 514-443.000.
Strähle, Fritz: *See—*
Vry, Uwe; Sager, Ottmar; Strähle, Fritz; and Poxleitner, Martin, 5,702,350, Cl. 600-166.000.
Straight, Christopher Bryan: *See—*
Craig, Edward Vincent; Kyle, Richard Frank; and Straight, Christopher Bryan, 5,702,486, Cl. 623-23.000.
Straub, Rainer: *See—*
Kaegi, Werner; Stibal, Werner; Schaech, Gunther; Straub, Rainer; and Schmidt, Gerhard, 5,701,644, Cl. 28-220.000.
Streicher, Stanley L.: *See—*
Morris, Sandra A.; Curotto, James E.; Bills, Gerald F.; Dreikorn, Sarah J.; Streicher, Stanley L.; Zink, Deborah L.; Thompson, John R.; Basilio, Angela; Pelaez, Fernando; Diez, Maria Teresa; and Vicente, Francisca, 5,702,929, Cl. 435-118.000.
Strezov, Lazar; Mahapatra, Rama Ballav; Sylva, Fred de; and Mukunthan, Kannappar, to Ishikawajima-Harima Heavy Industries Company Limited; and BHP Steel (JLA) Pty Ltd. Casting steel strip. 5,701,948, Cl. 164-480.000.
Stringer, Steven Ray: *See—*
Allen, Donald Eugene; Stringer, Steven Ray; Coyne, Richard Dale, deceased, 5,701,645, Cl. 29-25.350.
Stroud, Ernest T.: *See—*
Crook, David T.; and Stroud, Ernest T., 5,703,519, Cl. 327-387.000.
Struglinski, Mark Joseph; VerStrate, Gary William; and Fetters, Lewis J., to Exxon Chemical Patents Inc. Viscosity modifier polybutadiene polymers. 5,703,171, Cl. 525-314.000.
Struthers, Mehta and Maxwell: *See—*
Struthers, Ralph C.; and Mehta, Devendra V., 5,702,444, Cl. 623-11.000.
Struthers, Ralph C.; and Mehta, Devendra V., to Struthers, Mehta and Maxwell. Implantable artificial endocrine pancreas. 5,702,444, Cl. 623-11.000.
Stryker Corporation: *See—*
Henry, Patrick; Lapresle, Philippe; and Missenard, Gilles, 5,702,394, Cl. 606-61.000.
Matthai, John T.; and Huyser, Richard F., 5,702,415, Cl. 606-178.000.
Stucki, David Emmett: *See—*
George, Jonel; Glassen, Steven Gardner; Krygowski, Matthew Anthony; Kim, Moon Ju; Preston, Allen Herman; and Stucki, David Emmett, 5,704,055, Cl. 395-402.000.
Stumpe, Werner, to Robert Bosch GmbH. Method and apparatus for controlling a brake system of a vehicle. 5,702,163, Cl. 303-9.620.
Stumpff, Floyd E.: *See—*
Kragle, Harry A.; Stumpff, Floyd E.; and Treacy, David R., Jr., 5,702,659, Cl. 264-177.110.
Stutzman, Barbara A.: *See—*
Zajaczkowski, Michael J.; and Stutzman, Barbara A., 5,703,169, Cl. 525-309.000.
Zajaczkowski, Michael J.; and Stutzman, Barbara A., 5,703,170, Cl. 525-309.000.
Su, Shin-San: *See—*
Modrich, Paul L.; Su, Shin-San; Au, Karin G.; Lahue, Robert S.; Cooper, Deani Lee; and Worth, Leroy, Jr., 5,702,894, Cl. 435-6.000.
Suchanec, Richard Robert, to Hercules Incorporated. Air-entrained concrete with lignin-containing air-entraining agent. 5,702,521, Cl. 106-713.000.
Suchowski, Bernard; and Carroll, George, to Hartz Mountain Corporation, The. Device including buckle means for release of a pet collar. 5,701,849, Cl. 119-865.000.
Sugahara, Hirohide: *See—*
Fujita, Ryuji; and Sugahara, Hirohide, 5,704,056, Cl. 395-445.000.
Sugahara, Jun: *See—*
Nitta, Katuhisa; Shau, Tan Ming; and Sugahara, Jun, 5,702,519, Cl. 106-442.000.
Sugahara, Kazuko: *See—*
Osborn, Thomas W., III; Sugahara, Kazuko; and Hines, Letha M., 5,702,382, Cl. 604-385.200.
Sugai, Ryuji; Murakami, Umeji; and Yamori, Yukio, to Kanebo, Ltd. Preventive for circulatory diseases. 5,703,212, Cl. 530-360.000.
Sugama, Sadayuki: *See—*

Fujioka, Kazuyoshi; Kubo, Masumi; and Takafuji, Yutaka, 5,703,663, Cl. 349-5.000.
Takagi, Akira: *See—*
Nakatani, Kazushi; Takagi, Akira; and Yokoyama, Hajime, 5,701,982, Cl. 192-3.300.
Takagi, Genjiro, to Tachi-S Co., Ltd. Reclining device. 5,702,156, Cl. 297-367.000.
Takagi, Hiroshi: *See—*
Nakayama, Akinori; Ishikawa, Terunobi; Takagi, Hiroshi; and Sakabe, Yukio, 5,703,000, Cl. 501-152.000.
Takahashi, Atsuhiko, to Honda Giken Kogyo Kabushiki Kaisha. Oil cooling structure for a vehicle. 5,701,853, Cl. 123-41.330.
Takahashi, Hironori: *See—*
Nakamura, Takuya; Hirano, Isuke; Aoshima, Shinichiro; Takahashi, Hironori; and Urakami, Tsuneyuki, 5,703,491, Cl. 324-750.000.
Takahashi, Hiroshi: *See—*
Wands, Jack R.; and Takahashi, Hiroshi, 5,701,213, Cl. 530-388.850.
Takahashi, Hiroyuki; Hamada, Makoto; Fujishima, Hiromichi; Naito, Masaaki; Sasaki, Kazuya; Tsuchiya, Jiro; and Maeda, Tomoharu, to Toyota Jidosha Kabushiki Kaisha. Air bag apparatus for passenger seat. 5,702,123, Cl. 280-735.000.
Takahashi, Kanji: *See—*
Hamanaka, Nobuyuki; Takahashi, Kanji; and Tokumoto, Hidekado, 5,703,099, Cl. 514-340.000.
Takahashi, Kazuaki; Hasegawa, Makoto; Makimoto, Mitsuo; and Fujimura, Munenori, to Matsushita Electric Industrial Co., Ltd. Strip line filter having dual mode loop resonators. 5,703,546, Cl. 333-204.000.
Takahashi, Kazunori; Hamada, Nobuhiro; Takatoo, Masao; Nagai, Tohru; Suzuki, Toshiko; and Furukawa, Souichi, to Hitachi, Ltd. Traffic control method for relieving vehicle congestion on parallel roads. 5,703,778, Cl. 364-437.000.
Takahashi, Kenichi: *See—*
Yamamoto, Yuuri; Takahashi, Kenichi; Ohnishi, Hiroshi; Kunieda, Yoshinori; and Matsubara, Naoki, 5,703,913, Cl. 375-354.000.
Takahashi, Kenji: *See—*
Kondo, Tetsujiro; Fujimori, Yasuhiro; Takahashi, Kenji; and Kawaguchi, Kunio, 5,703,652, Cl. 348-421.000.
Takahashi, Koichi; and Iba, Yoichi, to Olympus Optical Co., Ltd. Image display apparatus. 5,703,605, Cl. 345-8.000.
Takahashi, Makoto; and Hasebe, Kiyoshi, to Yamaha Corporation. Electronic musical instrument and signal processor having a tonal effect imparting function. 5,703,312, Cl. 84-626.000.
Takahashi, Mamoru: *See—*
Tsutsui, Toshiyuki; Yoshitsugu, Ken; Takahashi, Mamoru; and Todo, Akira, 5,703,180, Cl. 526-119.000.
Takahashi, Masato: *See—*
Takata, Asami; Numata, Shoko; Mizukami, Yuichi; Sekiyama, Yasushi; and Takahashi, Masato, 5,703,124, Cl. 514-514.000.
Takahashi, Miyoko; and Jackowski, George, to Spectral Diagnostics. Monoclonal antibody to human ventricular myosin light chains. 5,702,905, Cl. 435-7.100.
Takahashi, Nobumitsu: *See—*
Yamaguchi, Toshiaki; Takahashi, Nobumitsu; and Yamaguchi, Hiroki, 5,701,677, Cl. 33-1.00M.
Takahashi, Nobuyasu, to Shima Seiki Manufacturing, Ltd. Method for broadening a tubular knitted fabric by a flat knitting machine, a knit design apparatus and a memory therefor, and knitted tubular fabric. 5,701,766, Cl. 66-70.000.
Takahashi, Shin; Ohashi, Yoshiharu; Ando, Yushi; and Okuyama, Toshio, to Toagosei Co., Ltd. Process for producing 2-cyanoacrylic acid. 5,703,267, Cl. 558-451.000.
Takahashi, Yoshiyuki: *See—*
Nishioka, Makoto; Yamane, Kazuo; Nishimura, Masaki; and Takahashi, Yoshiyuki, 5,702,850, Cl. 430-19.000.
Takaki, Min: *See—*
Quan, Clifton; Holbrook, Peter; Batterton, Bill; Fitzgerald, Pat; Roper, Dan; and Takaki, Min, 5,703,599, Cl. 342-368.000.
Takanabe, Naoko; and Tanaka, Ichiro, to Mitsubishi Denki Kabushiki Kaisha. Navigation system. 5,703,780, Cl. 364-449.300.
Takano, Jun: *See—*
Hiraiwa, Hiroyuki; Nakagawa, Kazuhiro; Jinbo, Hiroki; Takano, Jun; and Fujiwara, Seishi, 5,702,495, Cl. 65-17.100.
Takano, Toshiro; and Akashi, Mitsumasa, to Komatsu Ltd. Hydraulic apparatus for traveling. 5,701,796, Cl. 91-512.000.
Takaoka, Makoto, to Canon Kabushiki Kaisha. Color image transmitting method. 5,703,967, Cl. 382-239.000.
Takase, Akihiko; and Tanabe, Shirou, to Hitachi Ltd. Method and apparatus of multiplexing digital signal. 5,703,869, Cl. 370-229.000.
Takashima, Daisaburo: *See—*
Shiratake, Shinichiro; Takashima, Daisaburo; Tsuchida, Kenji; and Inaba, Tsuneo, 5,703,817, Cl. 365-200.000.
Takashima, Shoichi: *See—*
Tsuchida, Shinji; Takashima, Shoichi; and Izumi, Michihiro, 5,703,936, Cl. 379-88.000.
Takashima, Sumihiro, to Oko Electric Industry Co., Ltd. Offset cancel circuit and offset cancel system using the same. 5,703,516, Cl. 327-307.000.
Takata, Asami; Numata, Shoko; Mizukami, Yuichi; Sekiyama, Yasushi; and Takahashi, Masato, to Green Cross Corporation, The. Composition containing allyl isothiocyanate and its use. 5,703,124, Cl. 514-514.000.
Takata, Hidekazu; Mnich, Thomas; and Novosel, David, to Sharp Kabushiki K.K. Semiconductor memory device. 5,703,804, Cl. 365-145.000.
Takatoo, Masao: *See—*
Takahashi, Kazunori; Hamada, Nobuhiro; Takatoo, Masao; Nagai, Tohru; Suzuki, Toshiko; and Furukawa, Souichi, 5,703,778, Cl. 364-437.000.
Takaya, Shigeru: *See—*
Miyagi, Takahiro; Takaya, Shigeru; and Masunaga, Yoshifumi, 5,703,864, Cl. 369-112.000.
Takeda Chemical Industries, Ltd.: *See—*
Miyake, Akio; Nakamura, Masahira; and Fukushi, Hideto, 5,703,081, Cl. 514-254.000.
Naka, Takehiko; Nishikawa, Kohei; and Kato, Takeshi, 5,703,110, Cl. 514-396.000.
Takeda, Hitoshi: *See—*
Shimoda, Kenji; and Takeda, Hitoshi, 5,703,889, Cl. 371-55.000.
Takeda, Morihiro; and Nakahara, Masanao, to Dainippon Screen Mfg. Co., Ltd. Image inputting apparatus. 5,703,729, Cl. 359-821.000.
Takegata, Setsuko: *See—*
Nakai, Satoru; Kaneta, Mayumi; Kikumoto, Yoshikazu; Hong, Yeong-Man; Kawai, Kazuyoshi; Takegata, Setsuko; Ishii, Kiyoshi; Yanagihara, Yasuo; and Hirai, Yoshikatsu, 5,702,698, Cl. 424-85.200.
Takehara, Toru: *See—*
Itoh, Yuichi; Kobayashi, Kyoko; Uchiyama, Akira; and Takehara, Toru, 5,702,827, Cl. 428-519.000.
Takei, Hirofumi: *See—*
Ohta, Seiya; Kaneda, Kitahiro; Takei, Hirofumi; and Tanaka, Taeko, 5,703,638, Cl. 348-220.000.
Takemoto, Eriko: *See—*
Nakajima, Akihisa; Yabusaki, Masami; Hirata, Shoichi; Yamaguchi, Kenichi; Fujiwara, Shiokazu; Maruyama, Yasuo; Uchiyama, Yasuyuki; and Takemoto, Eriko, 5,703,941, Cl. 379-201.000.
Takemoto, Norikazu; Ishizuka, Hideki; Konta, Takeshi; and Takeuchi, Kunihiro, to Airbag Systems Co., Ltd. Energy reservoir protection apparatus in vehicle occupant protection system. 5,703,412, Cl. 307-10.100.
Takemoto, Takatoshi; and Tsurumi, Masayuki, to Kabushiki Kaisha Ace Denken. Game machine having a playing display screen. 5,702,303, Cl. 463-27.000.
Takeshima, Shinichi; Tanaka, Toshiaki; and Iguchi, Satoshi, to Toyota Jidosha Kabushiki Kaisha. Catalyst for purifying exhaust gases and process for producing the same. 5,702,675, Cl. 423-213.500.
Takeuchi, Hiroshi: *See—*
Sakakima, Hiroshi; Satomi, Mitsuo; and Takeuchi, Hiroshi, 5,702,834, Cl. 428-692.000.
Takeuchi, Katsunao: *See—*
Mizutani, Kouichi; Tanaka, Takehiko; Maruyama, Kenya; Senda, Masanori; Takeuchi, Katsunao; and Sato, Toru, 5,701,867, Cl. 123-339.160.
Takeuchi, Kunihiro: *See—*
Takemoto, Norikazu; Ishizuka, Hideki; Konta, Takeshi; and Takeuchi, Kunihiro, 5,703,412, Cl. 307-10.100.
Takeuchi, Takeshi: *See—*
Sasaki, Tatsuya; and Takeuchi, Takeshi, 5,703,974, Cl. 385-14.000.
Takizawa, Teruo, to NEC Corporation. Receptacle-type light module and light connector coupling apparatus. 5,703,982, Cl. 385-78.000.
Talaski, Edward J.: *See—*
Moss, Glenn A.; and Talaski, Edward J., 5,702,229, Cl. 415-55.400.
Taliercio, Michele: *See—*
Baroni, Andrea; Mastrodomenico, Giovanni; Taliercio, Michele; Capocelli, Piero; Carro, Luigi; and Varambally, Rajamohan, 5,703,821, Cl. 315-210.000.
Talley, John J.; Getman, Daniel P.; Lin, Ko-Chung; DeCrescenzo, Gary A.; Rogier, Donald J., Jr.; and Freskos, John N., to G. D. Searle & Co. Retroviral protease inhibitors. 5,703,076, Cl. 514-237.500.
Talley, John J., to Monsanto Company. Process for making chiral alpha-amino phosphonates and selected novel chiral alpha-amino phosphonates. 5,703,263, Cl. 558-170.000.
Tam, Pak: *See—*
Knoch, Lynnita K.; and Tam, Pak, 5,703,389, Cl. 257-327.000.
Tam, Sang William: *See—*
Garvey, David S.; Letts, L. Gordon; Renfroe, H. Burt; and Tam, Sang William, 5,703,073, Cl. 514-226.500.
Tamada, Osamu: *See—*
Yabe, Hisao; Iida, Yoshihiro; Suzuki, Akira; Ito, Hideo; Tashiro, Yoshio; Yamazaki, Minoru; Tamada, Osamu; Nakazawa, Masaaki; and Yamaya, Koji, 5,702,347, Cl. 600-121.000.
Tamai, Tadamoto; and Yamamoto, Toshitaka, to Sumitomo Heavy Industries, Ltd. Robotic arm supporting an object by interactive mechanism. 5,702,228, Cl. 414-744.500.
Tamoto, Nozomu: *See—*
Nagai, Kazukiyo; Adachi, Chihaya; Tamoto, Nozomu; and Sakon, Yohta, 5,702,833, Cl. 428-690.000.
Tamrock Oy: *See—*
Jantunen, Heikki, 5,701,962, Cl. 175-24.000.
Tamura, Hiroshi; Oda, Toshio; and Tanaka, Shigenori, to Seikagaku Kogyo Kabushiki Kaisha (Seikagaku Corporation). Reagent for endotoxin-specific assay. 5,702,882, Cl. 435-4.000.
Tan, Wayne H.: *See—*
Pakerisamy, Saragavani; and Tan, Wayne H., 5,702,005, Cl. 206-718.000.
Tanabe, Hiroyuki: *See—*
Sugimoto, Makoto; Musasa, Mamoru; Tanabe, Hiroyuki; and Konishi, Masahiro, 5,702,998, Cl. 501-97.000.
Tanabe Seiyaku Co., Ltd.: *See—*

Iwasaki, Tameo; Kondo, Kazuhiko; and Ohmizu, Hiroshi, 5,703,234, Cl. 544-50.000.
Tanabe, Shirou: *See—*
Takase, Akihiko; and Tanabe, Shirou, 5,703,869, Cl. 370-229.000.
Tanaka, David T.: *See—*
Cherry, Isaac R.; Bachman, John A.; Tanaka, David T.; So, Hangyick; and Henkin, Raphael, 5,701,894, Cl. 128-630.000.
Tanaka Denshi Kogyo Kabushiki Kaisha: *See—*
Hanada, Shinichi; and Mukoyama, Koichiro, 5,702,814, Cl. 428-364.000.
Tanaka, Hideyuki: *See—*
Shudo, Koichi; Sugioka, Tatsuo; Inazu, Mizuho; Tanaka, Hideyuki; Inoue, Tsutomu; and Kitamura, Kazuyuki, 5,703,128, Cl. 514-563.000.
Tanaka, Hirokazu: *See—*
Mori, Akira; Hagiwara, Shigeki; and Tanaka, Hirokazu, 5,703,709, Cl. 359-196.000.
Tanaka, Hiroyuki: *See—*
Nishimura, Masayuki; Sogabe, Kiyoshi; Tanaka, Hiroyuki; and Arai, Shinji, 5,702,784, Cl. 428-34.900.
Tanaka, Ichiro: *See—*
Takanabe, Naoko; and Tanaka, Ichiro, 5,703,780, Cl. 364-449.300.
Tanaka, Katsufumi: *See—*
Odachi, Yasuharu; and Tanaka, Katsufumi, 5,703,298, Cl. 73-862.333.
Tanaka, Kazuyoshi, to NEC Corporation. Method of reducing and magnifying picture size of a video composite signal. 5,703,659, Cl. 348-576.000.
Tanaka, Kenichi: *See—*
Goto, Shuichi; Tanaka, Kenichi; and Odaka, Hiroshi, 5,701,996, Cl. 206-287.000.
Tanaka, Kouzi: *See—*
Aoyama, Tooru; Tanaka, Shigeru; and Tanaka, Kouzi, 5,703,472, Cl. 322-28.000.
Tanaka, Mitsuru: *See—*
Kishino, Takao; Onodaka, Koji; Tanaka, Mitsuru; and Yamaguchi, Satoshi, 5,703,610, Cl. 345-74.000.
Tanaka, Paul I.: *See—*
Lo, Chester K. C.; and Tanaka, Paul I., 5,703,538, Cl. 331-4.000.
Tanaka, Rie: *See—*
Iwata, Hiromitsu; Nakatsuka, Takashi; Tanaka, Rie; and Ishiguro, Masaji, 5,703,068, Cl. 514-195.000.
Tanaka, Shigenori: *See—*
Tamura, Hiroshi; Oda, Toshio; and Tanaka, Shigenori, 5,702,882, Cl. 435-4.000.
Tanaka, Shigeru: *See—*
Aoyama, Tooru; Tanaka, Shigeru; and Tanaka, Kouzi, 5,703,472, Cl. 322-28.000.
Tanaka, Taeko: *See—*
Ohta, Seiya; Kaneda, Kitahiro; Takei, Hirofumi; and Tanaka, Taeko, 5,703,638, Cl. 348-220.000.
Tanaka, Takehiko: *See—*
Mizutani, Kouichi; Tanaka, Takehiko; Maruyama, Kenya; Senda, Masanori; Takeuchi, Katsunao; and Sato, Toru, 5,701,867, Cl. 123-339.160.
Tanaka, Toshiaki: *See—*
Takeshima, Shinichi; Tanaka, Toshiaki; and Iguchi, Satoshi, 5,702,675, Cl. 423-213.500.
Tanaka, Toshimasa, to Rohm Co., Ltd. Power supply circuit. 5,703,415, Cl. 307-66.000.
Tanaka, Toshio, to Orienta Yeast Co., Ltd. Expression of biologically active human C-reactive protein in *escherichia coli*. 5,702,921, Cl. 435-69.600.
Tanaka, Tsutomu: *See—*
Ohtani, Yasuo; Kataho, Takuo; Satoh, Makoto; Tanaka, Tsutomu; Nose, Yoshimasa; Kobayashi, Kazuyoshi; Uchikawa, Tetsuhide; and Hamahata, Toshihiro, 5,703,901, Cl. 373-109.000.
Tani, Hiroji: *See—*
Kawakami, Hiromichi; and Tani, Hiroji, 5,702,996, Cl. 501-14.000.
Tani, Masahiro: *See—*
Izawa, Yosuke; Tani, Masahiro; Okumura, Maoji; Nio, Yutaka; and Sato, Toshichika, 5,703,653, Cl. 348-445.000.
Tanifuji, Shinya: *See—*
Amano, Masahiko; Watanabe, Masahiro; Konishi, Hiroo; Tanifuji, Shinya; and Nakamura, Tomoharu, 5,703,791, Cl. 364-492.000.
Tanigawa, Hiroyasu; and Tanigawa, Kazunaga. Energy transformation method and its system for piston reciprocating cycle. 5,701,864, Cl. 123-290.000.
Tanigawa, Kazunaga: *See—*
Tanigawa, Hiroyasu; and Tanigawa, Kazunaga, 5,701,864, Cl. 123-290.000.
Taniguchi, Hideki: *See—*
Yoshida, Wataru; Fukushima, Tetsuaki; Taniguchi, Hideki; and Abe, Hiroshi, 5,703,264, Cl. 558-316.000.
Taniguchi, Mikio: *See—*
Itoh, Noriie; Kunihara, Mineo; Kushida, Hiroshi; McWhorter, William W.; Nomura, Syunji; Ozawa, Kazunori; Taniguchi, Mikio; and Tsuzuki, Kazuo, 5,703,071, Cl. 514-218.000.
Taniguchi, Takashi: *See—*
Akamatsu, Mikio; Seki, Kenji; Yamashita, Katsuhiro; Kobayashi, Takeya; and Taniguchi, Takashi, 5,701,762, Cl. 62-636.000.
Taniguchi, Yasushi: *See—*
Numata, Yoshito; Asada, Hidehisa; Dohi, Keiji; Fukunaga, Takahiro; and Taniguchi, Yasushi, 5,702,910, Cl. 435-7.940.
Taniguchi, Yukifumi: *See—*
Umeda, Hironori; Mashimo, Tohru; Hironaka, Kazuo; Nakahama, Tadamitsu; Yamane, Takakazu; Aizawa, Makoto; and Taniguchi, Yukifumi, 5,702,578, Cl. 204-486.000.
Tanizawa, Shoichi: *See—*
Sunada, Satoru; and Tanizawa, Shoichi, 5,702,322, Cl. 477-120.000.
Taraba, Emil M.; and Taraba, Jeffrey M. Structural foam core panels with built-in header. 5,701,708, Cl. 52-309.900.
Taraba, Jeffrey M.: *See—*
Taraba, Emil M.; and Taraba, Jeffrey M., 5,701,708, Cl. 52-309.900.
Tarabishy, Sam. Tension screw. 5,702,398, Cl. 606-72.000.
Tarcsay, Lajos: *See—*
Odink, Karel Gerrit; Clerc, Roger; Cerletti, Nico; Brüggen, Josef; Tarcsay, Lajos; Sorg, Clemens; and Wiesendanger, Walter, 5,702,920, Cl. 435-69.500.
Target Therapeutics, Inc.: *See—*
Samson, Gene, 5,702,373, Cl. 604-282.000.
Tark, Kyoung Sig; and Park, Sung Oun, to LG Electronics Inc. Exhaust noise suppressing apparatus for hermetic compressor. 5,703,336, Cl. 181-179.000.
Tarkett AG: *See—*
Jin, Peiwen, 5,703,141, Cl. 522-97.000.
Tartaglia, Louis Anthony, to Millennium Pharmaceuticals, Inc. Methods for the diagnosis of body weight disorders including obesity. 5,702,902, Cl. 435-6.000.
Tarter, Fred B.; Greene, Jeffrey M.; De Fazio, Thomas J.; Peck, Jan; Wylie, L. Stephen; Magnotte, Mark M.; Hall, Del; and Tarter, Scott A., to Pharmacy Fund, Inc., The. Computerized healthcare accounts receivable purchasing, collections, securitization and management system. 5,704,044, Cl. 395-204.000.
Tarter, Scott A.: *See—*
Tarter, Fred B.; Greene, Jeffrey M.; De Fazio, Thomas J.; Peck, Jan; Wylie, L. Stephen; Magnotte, Mark M.; Hall, Del; and Tarter, Scott A., 5,704,044, Cl. 395-204.000.
Tarumoto, Norihiro; Miyashita, Hiroyuki; Iimura, Yukio; and Mikami, Koichi, to Dai Nippon Printing Co., Ltd. Phase shift photomask, phase shift photomask blank, and process for fabricating them. 5,702,847, Cl. 430-5.000.
Tas, Adrianus Wilhelmus. Apparatus for conveying vulnerable articles in the article holders. 5,703,332, Cl. 177-52.000.
Tashiro, Masashi; and Kato, Hirokazu, to Yamaha Corporation. Karaoke apparatus responsive to oral request of entry songs. 5,703,308, Cl. 84-609.000.
Tashiro, Takashi; and Ueda, Takashi, to Mitsui Petrochemical Industries, Ltd. Catalyst olefin polymerization and process for olefin polymerization using the same. 5,703,181, Cl. 526-140.000.
Tashiro, Yoshio: *See—*
Yabe, Hisao; Iida, Yoshihiro; Suzuki, Akira; Ito, Hideo; Tashiro, Yoshio; Yamazaki, Minoru; Tamada, Osamu; Nakazawa, Masaaki; and Yamaya, Koji, 5,702,347, Cl. 600-121.000.
Tatematsu, Hideki: *See—*
Yuasa, Yasuhito; Hirota, Noriaki; Toyoda, Akinori; and Tatematsu, Hideki, 5,702,858, Cl. 430-106.600.
Tayloe, Daniel Richard; Miller, Nathan West; and Frederick, Robert Thomas, to Motorola, Inc. Method and apparatus for erratic doppler frequency shift compensation. 5,703,595, Cl. 342-175.000.
Taylor, Aaron K.: *See—*
Farris, Mark S.; Harrison, Michael A.; Loftus, John M.; Taylor, Aaron K.; Mack, Christoph E.; and Collins, Ross P., 5,702,092, Cl. 267-64.150.
Taylor, Alan: *See—*
Foster, John; Taylor, Alan; and Chatterley, Martin Patrick, 5,702,574, Cl. 204-224.000.
Taylor, Brenda M.: *See—*
Taylor, Joseph; and Taylor, Brenda M., 5,701,920, Cl. 132-212.000.
Taylor, Christopher D., to Hughes Aircraft Company. Process and apparatus for producing contoured molded mirrors with improved optical properties. 5,702,649, Cl. 264-1.900.
Taylor, Clive Roland. Current limited cross-coupled oscillators. 5,703,543, Cl. 331-116.0FE.
Taylor, Harold S.; and Taylor, J. Charles, to Smith & Nephew Richards, Inc. Orthopaedic fixation device. 5,702,389, Cl. 606-54.000.
Taylor, J. Charles: *See—*
Taylor, Harold S.; and Taylor, J. Charles, 5,702,389, Cl. 606-54.000.
Taylor, Jeffrey Robert. Fluid treatment method. 5,702,614, Cl. 210-738.000.
Taylor, Joseph; and Taylor, Brenda M. Debraiding tool. 5,701,920, Cl. 132-212.000.
Taylor, Kevin; Latzgo, Philip F.; and Lenihan, Timothy J., to Arrow International Investment Corp. Kink-resistant steerable catheter assembly for microwave ablation. 5,702,433, Cl. 607-101.000.
Taylor, Matthew Whiting: *See—*
Baranowski, Robert; and Taylor, Matthew Whiting, 5,703,470, Cl. 320-49.000.
Taylor, Phillip A.; Florczak, Jeffrey M.; Peterson, Mark A.; Iverson, Paul R.; Skorjanec, Joseph; and Lorentz, Robert D., to Minnesota Mining and Manufacturing Company. Photographic film base and color photographic material comprising a binderless magnetic layer. 5,702,876, Cl. 430-496.000.
Taylor, Richard, to Telstra Corporation Limited. Method and apparatus for generating a cipher stream. 5,703,952, Cl. 380-44.000.
Taylor, Robert. Collagen finings and preparation thereof. 5,703,211, Cl. 530-336.000.

Taylor, Robert: *See*—
Murphy, James V.; Murphy, Michael J.; Fisher, Burton; and Taylor, Robert, 5,702,255, Cl. 439-71.000.
Taylor, Stephen D.: *See*—
Hsu, Steve I.; Nussbaum, Howard S.; Posey, William P.; and Taylor, Stephen D., 5,703,514, Cl. 327-237.000.
Taylor, Thomas P.: *See*—
Hilfiker, William K.; and Taylor, Thomas P., 5,702,208, Cl. 405-258.000.
TBA Industrial Products Limited: *See*—
Kennedy, Brian Steven; and Hayhurst, Peter, 5,701,730, Cl. 57-224.000.
TDK Corporation: *See*—
Ohtani, Yasuo; Kataho, Takuo; Satoh, Makoto; Tanaka, Tsutomu; Nose, Yoshimasa; Kobayashi, Kazuyoshi; Uchikawa, Tetsuhide; and Hamahata, Toshihiro, 5,703,901, Cl. 373-109.000.
TEC Ventures, Inc.: *See*—
Petticrew, Richard W., 5,702,514, Cl. 106-35.000.
Tech-Source Inc.: *See*—
Lamm, Joe; and Gilbert, Carl, 5,703,585, Cl. 341-141.000.
Tecumseh Products Company: *See*—
Dreiman, Nelik I.; and Kandpal, Tara C., 5,701,668, Cl. 29-888.020.
Eberle, Frederick P.; and Jolliff, Norman E., 5,701,738, Cl. 60-435.000.
Tee-Lok Corporation: *See*—
Williams, Thomas H., 5,702,095, Cl. 269-37.000.
Tehrani, Saied N.; Chen, Eugene; Durlam, Mark; and Zhu, Xiaodong T., to Motorola. Method for detecting information stored in a MRAM cell having two magnetic layers in different thicknesses. 5,703,805, Cl. 365-173.000.
Tehrani, Saied N.: *See*—
Chen, Eugene; and Tehrani, Saied N., 5,702,831, Cl. 428-611.000.
Teijin Limited: *See*—
Hosoi, Masahiro; Saito, Yasuhiko; Saeki, Yasuhiro; and Etchu, Masami, 5,702,794, Cl. 428-65.300.
Teledyne Electronic Technologies: *See*—
Hoekman, Doneil J.; and Kelley, Paul E., 5,703,358, Cl. 250-282.000.
Teleflex, Incorporated: *See*—
Petercsak, Douglas W., 5,702,196, Cl. 403-46.000.
Telefonaktiebolaget LM Ericsson (publ.): *See*—
Ghisler, Walter, 5,703,933, Cl. 379-58.000.
Telesensory Corporation: *See*—
Lawson, John A.; Morrison, W. Andrew; and Savoie, Rob E., 5,703,727, Cl. 359-802.000.
Telstra Corporation Limited: *See*—
Taylor, Richard, 5,703,952, Cl. 380-44.000.
Tempo Research Corporation: *See*—
Wissman, Charles H., 5,703,481, Cl. 324-127.000.
Teradyne, Inc.: *See*—
Provencher, Daniel B.; Stokoe, Philip T.; and Gailus, Mark W., 5,702,258, Cl. 439-79.000.
Teraguchi, Yuji: *See*—
Hayashi, Hideki; and Teraguchi, Yuji, 5,703,866, Cl. 369-192.000.
Teramoto, Yosikiti: *See*—
Matsunaga, Satoru; Hino, Masayuki; and Teramoto, Yosikiti, 5,702,824, Cl. 428-500.000.
Terao, Kiminobu: *See*—
Kumagai, Yorinori; Kodama, Yoshihiro; Kojima, Yoichi; and Terao, Kiminobu, 5,701,976, Cl. 188-71.500.
Terao, Motoyasu: *See*—
Miyauchi, Yasushi; Terao, Motoyasu; Hirotsune, Akemi; Minemura, Hiroyuki; and Miyamoto, Harukazu, 5,703,867, Cl. 369-275.300.
Terasaki, Ryuichi: *See*—
Terui, Yoshinori; and Terasaki, Ryuichi, 5,702,822, Cl. 428-446.000.
Terasawa, Yoshio. Fabrication process for a static induction transistor. 5,702,962, Cl. 437-40.000.
Terashita, Takaaki, to Fuji Photo Film Co., Ltd. Method of making a photographic print. 5,703,672, Cl. 355-38.000.
Termaten, Gerrit Johannus: *See*—
Van Den Mosselaar, Franciscus Laurentius Maria Theresia; Termaten, Gerrit Johannus; and Reuser, Leonardus Theodorus Maria, 5,701,812, Cl. 100-91.000.
Terui, Yoshinori; and Terasaki, Ryuichi, to Denki Kagaku Kogyo Kabushiki Kaisha. Method for producing single crystal, and needle-like single crystal. 5,702,822, Cl. 428-446.000.
Terukina, Asao: *See*—
Koyama, Seiji; Nozawa, Tohru; Terukina, Asao; and Suzuki, Yasusuke, 5,703,582, Cl. 341-120.000.
Teschendorf, Hans-Jürgen: *See*—
Steiner, Gerd; Munschauer, Rainer; Unger, Liliane; Teschendorf, Hans-Jürgen; and Höger, Thomas, 5,703,091, Cl. 514-300.000.
Tessari, Hans: *See*—
Stoll, Alfred; Gulitz, Wolfgang; Tessari, Hans; and Eckhardt, Reiner, 5,702,068, Cl. 244-3.160.
Tetra Laval Convenience Food GmbH & Co. KG: *See*—
Christmann, Norbert Ernst; and Fries, Gerhard, 5,702,044, Cl. 226-173.000.
Teuco Guzzini S.r.l.: *See*—
Guzzini, Virgilio; Montangero, Enrico; and Ossori, Roberto, 5,702,353, Cl. 601-2.000.
Teuling, Dirk J. A.; and Misdom, Johannes A. C., to U.S. Philips Corporation. Switching device for S correction capacitors. 5,703,444, Cl. 315-371.000.
Texaco Inc.: *See*—
O'Young, Chi Lin; Shen, Yan-Fei; Dequzman, Roberto Nguyen; and Suib, Steven Lawrence, 5,702,674, Cl. 423-30.000.
Texas Instruments Incorporated: *See*—
Abe, Koichi; and Inui, Takashi, 5,703,499, Cl. 326-62.000.
Hennessey, A. Kathleen; Lin, YouLing; Hastings, Howard V., III; Lovelace, Jerome R.; and Chang, Ning San, 5,703,969, Cl. 382-276.000.
Hutter, Louis N.; and Smith, Jeffrey P., 5,702,959, Cl. 437-31.000.
Liu, William U.; and Hill, Darrell G., 5,702,958, Cl. 437-31.000.
Marotta, Giulio; and Pasero, Eros, 5,704,014, Cl. 395-24.000.
Smayling, Michael C.; Santin, Giovanni; and Marotta, Giulio, 5,703,807, Cl. 365-185.030.
Smith, Gregory C.; and Boysel, Robert M., 5,703,728, Cl. 359-871.000.
Winterer, Albert, 5,703,525, Cl. 329-300.000.
Texas Insturments Incorporated: *See*—
Houston, Theodore W., 5,703,517, Cl. 327-312.000.
Texas Tech University: *See*—
Hennessey, A. Kathleen; Lin, YouLing; Hastings, Howard V., III; Lovelace, Jerome R.; and Chang, Ning San, 5,703,969, Cl. 382-276.000.
TGK Company, Ltd.: *See*—
Hirota, Hisatoshi; and Ito, Naoyuki, 5,702,235, Cl. 417-222.200.
Thalenfeld, David R.; and Nagel, Thomas O., to Trion Industries Inc. Merchandise display hook with positioning support for pivoting label holder. 5,702,008, Cl. 211-57.100.
Tham, Robert Q.; and Keitel, Todd, to Ohmeda Inc. Automatic air wash for anesthesia system. 5,701,888, Cl. 128-204.210.
Themont, Jean-Pierre: *See*—
Bocko, Peter L.; Eid, Bernard A.; Johnson, Ronald E.; Lock, William E.; Shoup, Robert D.; and Themont, Jean-Pierre, 5,701,815, Cl. 101-211.000.
Theobald, Hans: *See*—
Baumann, Ernst; Rheinheimer, Joachim; Vogelbacher, Uwe Josef; Bratz, Matthias; Theobald, Hans; Gerber, Matthias; Westphalen, Karl-Otto; Walter, Helmut; and Rademacher, Wilhelm, 5,703,017, Cl. 504-227.000.
Thermal Energy Systems, Incorporated: *See*—
Goodson, David B.; and McRuer, Robert N., 5,702,244, Cl. 431-2.000.
Thiessen, Jeffrey S.; Enga, John M.; and Gonzalez, Hector F., to Geneva Group of Companies, Inc. Universal cassette cartridge. 5,703,742, Cl. 360-132.000.
Thiessen, Richard Harry: *See*—
Glaug, Frank Steven; Brunner, Michael Scott; Cochrane, Faith Eileen; Durrance, Debra Hartley; Olson, Christopher Peter; Schleinz, Robert Joseph; and Thiessen, Richard Harry, 5,702,376, Cl. 604-361.000.
Thimm, Franz: *See*—
Schulmann, Winfried; Thimm, Franz; and Kaiser, Helmut, 5,702,523, Cl. 117-208.000.
Thissen, Wilhelm: *See*—
Gerhards, Bernhard; Krutt, Hans-Jürgen; and Thissen, Wilhelm, 5,703,284, Cl. 73-146.000.
Thoma, Endre Philip: *See*—
Sartwell, Alfred Leonard; and Thoma, Endre Philip, 5,703,495, Cl. 324-763.000.
Thomann, Mark R.: *See*—
Hush, Glen; Seibert, Mike; Mailloux, Jeff; and Thomann, Mark R., 5,703,826, Cl. 365-230.050.
Thomas, Alvin: *See*—
O'Brien, Patrick J.; Thomas, Alvin; Rufo, George, Jr.; Durham, Larry; and Gelardi, Anthony L., 5,701,997, Cl. 206-308.100.
Thomas, Brian J.; Slayton, Gerald D.; Heiman, Jerome R.; and Barnett, Rick, to Globe-Union Inc. Electrolyte venting system with tubular splash guards. 5,702,841, Cl. 429-88.000.
Thomas, Christopher P.; McCombie, Jay C.; Weber, Gregory T.; Ehlers, Jeffery C.; and Soltis, Dennis A., to Chrysler Corporation. Method of adjusting idle spark for an individual cylinder of an internal combustion engine. 5,701,865, Cl. 123-339.110.
Thomas Jefferson University: *See*—
Wickstrom, Eric; and Le Bec, Christine, 5,703,223, Cl. 536-25.330.
Thomas, Joel M.: *See*—
Groves, Oliver J.; Jensen, Donald A.; Nelson, Thomas S.; and Thomas, Joel M., 5,701,651, Cl. 29-281.500.
Thomas, Melissa K.: *See*—
Beavo, Joseph A.; Corbin, Jackie D.; Ferguson, Kenneth M.; Francis, Sharron H.; Kadlecek, Ann; Loughney, Kate; McAllister-Lucas, Linda M.; Sonnenburg, William K.; and Thomas, Melissa K., 5,702,936, Cl. 435-196.000.
Thomas, Pascal: *See*—
Challande, Christian; Desarmaux, Pierre; and Thomas, Pascal, 5,702,119, Cl. 280-625.000.
Thome, Caryl: *See*—
Burtin, Jean Pierre; Dobrowolski, Flavien; and Thome, Caryl, 5,703,770, Cl. 363-61.000.
Thompson, Andrew, to Interface, Inc. Modified multiphase bitumen composition and floor covering. 5,702,796, Cl. 428-95.000.
Thompson, John R.: *See*—
Morris, Sandra A.; Curotto, James E.; Bills, Gerald F.; Dreikorn, Sarah J.; Streicher, Stanley L.; Zink, Deborah L.; Thompson, John R.; Basilio, Angela; Pelaez, Fernando; Diez, Maria Teresa; and Vicente, Francisca, 5,702,929, Cl. 435-118.000.
Thompson, Linda: *See*—
Palmers, Bruce; and Thompson, Linda, 5,702,744, Cl. 426-242.000.
Thompson, Malcolm J.: *See*—

Martin, Russel A.; Bruce, Richard H.; DaCosta, Victor M.; Fiske, Thomas G.; Lewis, Alan G.; Silverstein, Louis D.; Steemers, Hugo L.; Thompson, Malcolm J.; and Turner, William D., 5,703,621, Cl. 345-147.000.
Thompson, Mark E.: *See*—
Forrest, Stephen R.; Thompson, Mark E.; Burrows, Paul E.; Bulovic, Vladimir; and Gu, Gong, 5,703,436, Cl. 313-506.000.
Thompson, Samuel Anthony, to Hercules Incorporated. Methods for preparing radiopaque medical devices. 5,702,682, Cl. 424-9.420.
Thompson, Stuart A.; and Blaser, Martin J., to Vanderbilt University. Nucleic acid encoding *helicobacter pylori* enolase. 5,703,219, Cl. 536-23.200.
Thomson Consumer Electronics, Inc.: *See*—
Wilber, James Albert, 5,703,445, Cl. 315-387.000.
Thomson-CSF: *See*—
Audoin, Michel; Moreau, Bertrand; and Colineau, Joseph, 5,703,845, Cl. 369-44.410.
Feral, Thierry; Fromont, Bernard; Stephan, Ronan; Sernit, Eric; and Lacour, Olivier, 5,703,425, Cl. 310-366.000.
Solal, Marc; Ventura, Pascal; and Hode, Jean-Michel, 5,703,427, Cl. 310-313.00D.
Thongpreda, Nisra; Hori, Roy Y.; and Kyle, Richard F., to Zimmer, Inc. Implant fixation stem. 5,702,482, Cl. 623-23.000.
Thony, Philippe; Rabarot, Marc; and Molva, Engin, to Commissariat a l'Energie Atomique. Microlaser cavity, a solid state pulsed microlaser with active Q-switching by a micromodulator and method forming same. 5,703,890, Cl. 372-12.000.
Thor Technology Corporation: *See*—
Smith, James W.; and Tran, Hoc Nghia, 5,702,570, Cl. 162-30.100.
Thoratec Laboratories Corporation: *See*—
Buck, Keith Evan; Farrar, David John; Harvey, Robert Joseph; Litwak, Philip; and Rueff, John Robert, 5,701,919, Cl. 128-898.000.
Thorburn, Herbert James: *See*—
Sivilotti, Olivo Giuseppe; Leone, Gino Luigi; Sutherland, James Gordon; Thorburn, Herbert James; and Crosato, Bruno, 5,701,775, Cl. 72-201.000.
Thoss, Werner, to Kerl Holzbau GmbH. Timber connecting system and timber connecting element. 5,701,716, Cl. 52-713.000.
Thünker, Norbert; and Junghans, Rudi, to Heidelberger Druckmaschinen Aktiengesellschaft. Apparatus for adjusting the movement of a roller in a printing press. 5,701,817, Cl. 101-350.000.
Tidman, Derek A., to General Dynamics Land Systems Inc. Cartridge having high pressure light gas. 5,703,322, Cl. 102-440.000.
Tihanyi, Jenoe: *See*—
Gantioler, Josef-Matthias; Heil, Holger; and Tihanyi, Jenoe, 5,703,521, Cl. 327-512.000.
Tiller, Norman Andrew; and Grundel, Louis George. Scented rock and method for making the same. 5,702,780, Cl. 428-15.000.
Timár, Tibor: *See*—
Eszenyi, Tibor; Sebök, Péter; Frank, László; Papp, Gyula; Timár, Tibor; and Bartik, Tamás, 5,703,113, Cl. 514-422.000.
Timmenga, Hubert J., to Sim Associates. Waste conversion by liquid thermophilic aerobic digestion. 5,702,499, Cl. 71-9.000.
Timmers, Francis J., to Dow Chemical Company, The. Pseudo-random copolymers formed by use of constrained geometry addition polymerization catalysts. 5,703,187, Cl. 526-282.000.
Ting, Chou Ling: *See*—
Martell, Charles R.; Cassidy, Michael J.; Ramsey, Anita K.; Liu, Zih-Fang; Ting, Chou Ling; and McKellar, H. Anderson, 5,703,781, Cl. 364-470.060.
Ting, Edmund Y.: *See*—
Schuman, Bruce M.; and Ting, Edmund Y., 5,701,808, Cl. 99-453.000.
Ting, Sai L.: *See*—
Ghaffaripour, Parviz; Kalb, Arthur J.; Johnson, Nick M.; and Ting, Sai L., 5,703,529, Cl. 330-51.000.
Ting, Tah-Kang Joseph; Hsieh, Ching-Chih; and Rong, Bor-Doou, to Etron Technology, Inc. t_{RAS} protection circuit. 5,703,832, Cl. 365-233.000.
Tippey, Keith Edward; and Axelgaard, Jens, to Axelgaard Manufacturing Company, Ltd. Electrical stimulation for treatment of incontinence and other neuro-muscular disorders. 5,702,428, Cl. 607-41.000.
Tipton, Arthur J.: *See*—
Dunn, Richard L.; and Tipton, Arthur J., 5,702,716, Cl. 424-422.000.
Titon Hardware Limited: *See*—
Anderson, John Neil; and Stoney, Arthur, 5,702,297, Cl. 454-213.000.
Tixier, Jean-Pierre; and Legrand, Annie Francoise Armande, to Eastman Kodak Company. Composition for an antistatic layer and a film comprising this layer. 5,702,809, Cl. 428-216.000.
Tjoeng, Foe S.: *See*—
Bovy, Philippe R.; Rico, Joseph G.; Rogers, Thomas E.; Tjoeng, Foe S.; and Zablocki, Jeffery A., 5,703,125, Cl. 514-539.000.
Tjuvajev, Juri: *See*—
Blasberg, Ronald G.; and Tjuvajev, Juri, 5,703,056, Cl. 514-44.000.
TNT Tools, Inc.: *See*—
Garcia, Glenn M.; and Diller, Robert E., 5,701,680, Cl. 33-526.000.
Toa Medical Electronics Co., Ltd.: *See*—
Asano, Kaoru; and Kubo, Kimiyo, 5,703,959, Cl. 382-133.000.
Toagosei Co., Ltd.: *See*—
Takahashi, Shin; Ohashi, Yoshiharu; Ando, Yushi; and Okuyama, Toshio, 5,703,267, Cl. 558-451.000.
Tobergte, Edward H.: *See*—
Rector, James L.; and Tobergte, Edward H., 5,701,611, Cl. 2-455.000.
Toda, Asao: *See*—
Nagai, Takashi; Honda, Nobuyasu; Iida, Tomohide; Akiyama, Toshiaki; Kuramashi, Koji; and Toda, Asao, 5,702,857, Cl. 430-101.000.
Toda, Tsuyoshi: *See*—
Kirino, Fumiyoshi; Toda, Tsuyoshi; Ide, Horishi; Sugiyama, Hisataka; Saito, Atsushi; Tsuchinaga, Hiroyuki; Maeda, Takeshi; Kugiya, Fumio; Kaku, Toshimitsu; Mita, Seiichi; Shigematsu, Kazuo; and Ouchi, Yasuhide, 5,703,855, Cl. 369-54.000.
Todd, Michael G.: *See*—
Goenka, Lakhi N.; Todd, Michael G.; and Glovatsky, Andrew Z., 5,702,584, Cl. 205-158.000.
Todo, Akira: *See*—
Tsutsui, Toshiyuki; Yoshitsugu, Ken; Takahashi, Mamoru; and Todo, Akira, 5,703,180, Cl. 526-119.000.
Todokoro, Masatoshi, to Agatsuma Co., Ltd. Game board. 5,702,108, Cl. 273-447.000.
Tognazzini, Bruce, to Sun Microsystems, Inc. Aircraft N-number control system. 5,703,591, Cl. 342-30.000.
Toho Chemical Engineering and Construction Co., Ltd.: *See*—
Akamatsu, Mikio; Seki, Kenji; Yamashita, Katsuhiro; Kobayashi, Takeya; and Taniguchi, Takashi, 5,701,762, Cl. 62-636.000.
Tohyama, Daisuke: *See*—
Noda, Junichiro; and Tohyama, Daisuke, 5,702,966, Cl. 437-43.000.
Tokai Industrial Sewing Machine Co., Ltd.: *See*—
Tajima, Ikuo; Kojima, Terutada; Anesaki, Tomoaki; and Fukuoka, Minao, 5,701,832, Cl. 112-155.000.
Tokin Corporation: *See*—
Osada, Takayuki; Tsuda, Fumishiro; Saito, Norio; Ihara, Takeji; Wagatsuma, Yoshio; and Moriya, Hitoshi, 5,703,557, Cl. 336-92.000.
Tokuda, Kanji, to Fuji Photo Film Co., Ltd. Method of and apparatus for inputting photographic information, camera, and method of and apparatus for printing photographic information. 5,703,673, Cl. 355-40.000.
Tokumoto, Hidekado: *See*—
Hamanaka, Nobuyuki; Takahashi, Kanji; and Tokumoto, Hidekado, 5,703,099, Cl. 514-340.000.
Tokunaga, Hiroyuki: *See*—
Yamamoto, Yorihisa; Nishi, Yutaka; Nishimori, Takashi; Tokunaga, Hiroyuki; and Machino, Hideki, 5,703,775, Cl. 364-424.051.
Tokyo Electron Limited: *See*—
Sano, Kunio, 5,703,494, Cl. 324-761.000.
Tokyo Ohka Kogyo Co., Ltd.: *See*—
Niikura, Satoshi; Suzuki, Takako; Doi, Kousuke; Kohara, Hidekatsu; and Nakayama, Toshimasa, 5,702,861, Cl. 430-191.000.
Ohno, Hayato; Nakao, Taku; Harada, Hisanobu; Hidesaka, Shinichi; Kohara, Hidekatsu; and Nakayama, Toshimasa, 5,702,862, Cl. 430-191.000.
Tolco, Incorporated: *See*—
Heath, Richard W., 5,702,077, Cl. 248-59.000.
Tolley, Robert Frank: *See*—
Smith, Alan Keith; Monk, John Frederick; and Tolley, Robert Frank, 5,702,178, Cl. 362-294.000.
Toltzman, Douglas: *See*—
Allen, Wade C.; Goodwin, Jeremy Philip; Nielsen, Robert Louis; Reder, Paul Joseph; and Toltzman, Douglas, 5,704,041, Cl. 395-200.150.
Tolvanen, Heikki: *See*—
Rasimus, Seppo; and Tolvanen, Heikki, 5,702,183, Cl. 366-195.000.
Tom, Judy C.: *See*—
Bean, Dennis L.; Malone, Philip G.; Sykes, Melvin C.; Tom, Judy C.; and Walley, Donald M., 5,702,651, Cl. 264-34.000.
Tomazic, Gerd, to Elin Energieanwendung Gesellschaft M.B.H. Process for charging and discharging zinc/bromine batteries. 5,702,842, Cl. 429-105.000.
Tombs, Thomas N.: *See*—
May, John W.; Tombs, Thomas N.; and Tyagi, Dinesh, 5,702,852, Cl. 430-47.000.
Tomida, Shigetoshi: *See*—
Ito, Hideaki; and Tomida, Shigetoshi, 5,701,838, Cl. 116-28.100.
Tomisawa, Naoki, to Unisia Jecs Corporation. Method and apparatus for controlling the ignition timing of an internal combustion engine. 5,701,868, Cl. 123-424.000.
Tomoegawa Paper Co., Ltd.: *See*—
Kubota, Hideyuki, 5,702,859, Cl. 430-110.000.
Tomooka, Hiroyuki; and Sugimoto, Tadashi, to Optex Co., Ltd. Passive-type infrared sensor system for detecting human body. 5,703,368, Cl. 250-349.000.
Tomozane, Shotaro; Kidou, Hirokazu; and Nakabayashi, Yukikazu, to Suntec Corporation. Shaped glass sheet and a process for the preparation thereof. 5,702,496, Cl. 65-102.000.
Tompkins, Thomas L.; Shirk, Ryan C.; Schroeer, Steven C.; Merry, Richard P.; Ista, Troy K.; and Bloom, Richard L., to Minnesota Mining and Manufacturing Company. Airbag filter assembly and method of assembly thereof. 5,702,494, Cl. 55-498.000.
Tonegawa, Nobuyuki, to Canon Kabushiki Kaisha. Information recording/reproducing apparatus for executing system control and servo control by single CPU. 5,703,842, Cl. 369-32.000.
Toray Industries, Inc.: *See*—
Asakura, Ryosuke; Nagaiwa, Hirohito; and Murakami, Masashige, 5,703,179, Cl. 526-59.000.
Torbert, Michele Pauline: *See*—
Raissyan, Anousheh; Wood, Kody Raymond; Jacobi, Michael Joseph; King, Linda S.; Seydel, Lee Chopek; Torbert, Michele Pauline; and Leonard, Robert Gary, 5,703,935, Cl. 379-88.000.

Torelli, Guido P.: *See*—
Rivoir, Roberto; Maloberti, Franco; and Torelli, Guido P., 5,703,588, Cl. 341-159.000.
Torigoe, Eiichi; and Shimoya, Masahiro, to Denso Corporation. Refrigerant evaporator, improved for uniform temperature of air blown out therefrom. 5,701,760, Cl. 62-524.000.
Torii, Masafumi; Furuya, Hiromi; Shimada, Masaru; and Tsutsui, Kyoji, to Ricoh Company, Ltd. Thermosensitive coloring composition and reversible thermosensitive recording medium using same. 5,703,005, Cl. 503-201.000.
Tornier, Alain, to Tornier SA. Acetabular implant intended in particular for the iliac joint socket. 5,702,478, Cl. 623-22.000.
Tornier S.A.: *See*—
Walch, Gilles; and Boileau, Pascal, 5,702,447, Cl. 623-16.000.
Tornier SA: *See*—
Tornier, Alain, 5,702,478, Cl. 623-22.000.
Walch, Gilles; and Boileau, Pascal, 5,702,457, Cl. 623-19.000.
Torrisi, Angelo M.; and Urbano, Roland, to Torrisi, Angelo M. Safety ring for double open-ended sample holder cell for spectroscopic analysis. 5,703,927, Cl. 378-208.000.
Total Raffinage Distribution S.A.: *See*—
Jolivet, Yannick; Malot, Michel; and Jamois, Didier, 5,703,148, Cl. 124-62.000.
Tournier, Hervé; Schneider, Michel; and Guillot, Christian, to Bracco Research S.A. Liposomes with enhanced entrapment capacity, method and use. 5,702,722, Cl. 424-450.000.
Tovarischestvo S Ogranichennoi Otvetstvennostju "Konkur": *See*—
Korzhenkov, Petr Nikolaevich; Pyait, Jury Leonidovich; Smagin, Alexandr Semenovich; and Epshtein, Alexandr Lvovich, 5,703,603, Cl. 343-753.000.
Towata, Atsuya; and Sando, Mutsuo, to Agency of Industrial Science & Technology, Ministry of International Trade & Industry. Photocatalyst particles containing ferromagnetic metal particles and method for synthesis thereof. 5,703,002, Cl. 502-350.000.
Toyama, Akira; and Shimizu, Kazuhiro, to Yokogawa Electric Corporation. Timing generator for testing IC. 5,703,515, Cl. 327-294.000.
Toyoda, Akinori: *See*—
Yuasa, Yasuhito; Hirota, Noriaki; Toyoda, Akinori; and Tatematsu, Hideki, 5,702,858, Cl. 430-106.600.
Toyoda Gosei Co., Ltd.: *See*—
Goto, Shinichi; Kobayashi, Masao; Kuzuya, Yasuhisa; and Ichikawa, Hidehito, 5,702,782, Cl. 428-31.000.
Toyono, Tsutomu: *See*—
Mouri, Akihiro; Toyono, Tsutomu; Kaneko, Shuzo; Inaba, Yutaka; and Kanbe, Junichiro, 5,703,614, Cl. 345-97.000.
Toyosawa, Takeshi: *See*—
Watanabe, Toshiya; Noguchi, Masatoshi; Toyosawa, Takeshi; and Morita, Minoru, 5,702,188, Cl. 400-120.050.
Toyoshima, Hideo: *See*—
Kuhara, Shigeru; and Toyoshima, Hideo, 5,703,815, Cl. 365-194.000.
Toyoshima, Takayuki; and Iida, Eiichi, to Yokohama Rubber Co., Ltd., The. Pneumatic radial tire having asymmetric tread pattern. 5,702,545, Cl. 152-209.00A.
Toyota Jidosha Kabushiki Kaisha: *See*—
Aoki, Keiichiro, 5,701,877, Cl. 123-697.000.
Kawaguchi, Akio, 5,701,735, Cl. 60-274.000.
Kirii, Kazunari, 5,701,778, Cl. 72-351.000.
Koibuchi, Ken, 5,702,165, Cl. 303-146.000.
Matsumoto, Shogo; and Murata, Kiyohito, 5,701,983, Cl. 192-35.000.
Moriya, Yoshihito, 5,701,858, Cl. 123-90.170.
Takahashi, Hiroyuki; Hamada, Makoto; Fujishima, Hiromichi; Naito, Masaaki; Sasaki, Kazuya; Tsuchiya, Jiro; and Maeda, Tomoharu, 5,702,123, Cl. 280-735.000.
Takeshima, Shinichi; Tanaka, Toshiaki; and Iguchi, Satoshi, 5,702,675, Cl. 423-213.500.
Yamanaka, Naoki; and Tsuge, Kazutoshi, 5,701,777, Cl. 72-350.000.
Toyota Jidoshi Kabushiki Kaisha: *See*—
Mizutani, Kouichi; Tanaka, Takehiko; Maruyama, Kenya; Senda, Masanori; Takeuchi, Katsunao; and Sato, Toru, 5,701,867, Cl. 123-339.160.
Tozawa, Masashi. Adjustable animal leash provided with plural branch leash members. 5,701,848, Cl. 119-797.000.
Tracey, Michael J., to Otis Elevator Company. Linear belt door operator. 5,701,973, Cl. 187-316.000.
Trammell, Michele P.: *See*—
Beckman, Ralph A.; Schwartz, Stephen A.; Radojevich, Roseann; and Trammell, Michele P., 5,702,282, Cl. 446-267.000.
Tran, Hoc Nghia: *See*—
Smith, James W.; and Tran, Hoc Nghia, 5,702,570, Cl. 162-30.100.
Tran, Minh: *See*—
Brownmiller, Curtis; Bencheck, Mike; Tran, Minh; Branton, Robert; DeMoss, Mark; and Landon, Steve, 5,704,036, Cl. 395-183.190.
Tran, Minh N.; and Hrovat, Davorin D., to Ford Global Technologies, Inc. Traction control through cross-axes oscillation control. 5,702,164, Cl. 303-139.000.
Trani, Marina; and Ricci, Carlo, to Procter & Gamble Company, The. Granular laundry bleaching composition. 5,702,635, Cl. 252-186.270.
Trani, Marina; Trigiante, Guiseppe; and Frasier, Ellie Marie, to Procter & Gamble Company. Granular bleaching compositions. 5,703,031, Cl. 510-312.000.
TransCom Corporation: *See*—
Bella, James; and Clark, William G., 5,703,411, Cl. 307-10.100.
Traxler, James T.: *See*—
Rommel, Jeffrey S.; Traxler, James T.; and Boettcher, Richard R., 5,703,248, Cl. 549-62.000.
Treacy, David R., Jr.: *See*—
Kragle, Harry A.; Stumpff, Floyd E.; and Treacy, David R., Jr., 5,702,659, Cl. 264-177.110.
Treharne, William David, to Ford Global Technologies, Inc. Method for operating a vehicle security system including code comparison after starting which counts start attempts. 5,703,413, Cl. 307-10.500.
Tremelling, Tim Cyril, to Innovative Construction Technologies Corporation. Self-supporting concrete form module. 5,701,710, Cl. 52-426.000.
Trespidi, Franco: *See*—
Perini, Umberto; Martinelli, Paolo; Golinelli, Elena; Musazzi, Sergio; Trespidi, Franco; and Pintus, Nice, 5,703,690, Cl. 356-436.000.
Treutler, Christoph; Benz, Rolf; Muenzel, Horst; Schmidt, Steffen; Reihlen, Eckart; and Lock, Andreas, to Robert Bosch GmbH. Measuring element for a flow sensor. 5,703,287, Cl. 73-204.260.
Trigiante, Guiseppe: *See*—
Trani, Marina; Trigiante, Guiseppe; and Frasier, Ellie Marie, 5,703,031, Cl. 510-312.000.
Trimberger, Stephen M., to Xilinx, Inc. Multi-chip electrically reconfigurable module with predominantly extra-package inter-chip connections. 5,703,759, Cl. 361-777.000.
Trion Industries Inc.: *See*—
Thalenfeld, David R.; and Nagel, Thomas O., 5,702,008, Cl. 211-57.100.
Tristrata Technology, Inc.: *See*—
Yu, Ruey J.; and Van Scott, Eugene J., 5,702,688, Cl. 424-59.000.
Troglia, Claudio: *See*—
Cavallotti, Claudio; Nucida, Gilberto; and Troglia, Claudio, 5,703,242, Cl. 548-473.000.
Cavallotti, Claudio; Nucida, Gilberto; and Troglia, Claudio, 5,703,245, Cl. 548-473.000.
Trompeter Electronics, Inc.: *See*—
Brown, Gregory S.; Quach, Frank; and Silva, Jose, 5,702,262, Cl. 439-188.000.
Tronchet, Jean: *See*—
Bourboulou, Yves; Boucheteil, Micheline; Philippon, Céline; and Tronchet, Jean, 5,701,937, Cl. 141-244.000.
Trujillo, Edward M.; and Rappaport, Catherine, to University of Utah Research Foundation. Culture method for multilayer growth of anchorage-dependent cells. 5,702,949, Cl. 435-402.000.
Trumpf GmbH & Co.: *See*—
Schulze, Eckehart; and Bytow, Peter, 5,701,791, Cl. 83-277.000.
Trustees of Columbia University in The City of New York, The: *See*—
Bonaldo, Maria DeFatima; and Soares, Marcelo Bento, 5,702,898, Cl. 435-6.000.
Trustees Of Princeton University, The: *See*—
Forrest, Stephen R.; Thompson, Mark E.; Burrows, Paul E.; Bulovic, Vladimir; and Gu, Gong, 5,703,436, Cl. 313-506.000.
TRW Inc.: *See*—
Foo, Chek-Peng; Yeh, Huahn-Fern; Wright, Timothy Chester; and Shields, Anne Marie, 5,702,124, Cl. 280-735.000.
Shreve, Gregory A.; Guzzino, Kim S.; and Hulvey, Robert W., 5,703,656, Cl. 348-549.000.
Tsai, Chaochieh; Hsu, Shun-Liang; and Shue, Shaulin, to Taiwan Semiconductor Manufacturing Company Ltd. Method of fabricating MOSFET devices. 5,702,972, Cl. 437-56.000.
Tsai, Ming-Liang: *See*—
Losi, Raymond, Jr.; and Tsai, Ming-Liang, 5,701,923, Cl. 135-131.000.
Tsang, Chih-Hao Mark; Petty, Randall Hughes; Clausen, Glenn Allen; and Schrader, Charles Henry, to ABB Lummus Global Inc. Process for converting olefinic hydrocarbons using spent FCC catalyst. 5,702,589, Cl. 208-67.000.
Tsao, Chien-Hua. Slender tubular container with opening and closing means. 5,702,035, Cl. 222-187.000.
Tschirner, Wolfgang. Roll for the pressure treatment of cloth webs. 5,702,045, Cl. 226-191.000.
Tseka, Thomas C.: *See*—
Fritz, James E.; Tseka, Thomas C.; and Sutula, Daniel P., Jr., 5,703,319, Cl. 102-275.700.
Tseng, Horng-Huei, to Vanguard International Semiconductor Corporation. Method of fabricating a deep submicron MOSFET device using a recessed, narrow polysilicon gate structure. 5,702,967, Cl. 437-45.000.
Tseng, Pin-Nan: *See*—
Lee, Chung-Kuang; Hsu, Jung-Hsien; and Tseng, Pin-Nan, 5,702,982, Cl. 437-195.000.
Tse Tang, Man-Wing, to UOP. Composite gas separation membranes and making thereof. 5,702,503, Cl. 95-45.000.
Tsubakimoto Chain Co.: *See*—
Hayafune, Hiroshi; and Kumakura, Atsushi, 5,702,318, Cl. 474-111.000.
Tsubata, Shintaro; and Nishiyama, Tamotru, to Matsushita Electric Industrial Co., Ltd. Method and apparatus for automatically designing logic circuit, and multiplier. 5,703,802, Cl. 364-760.000.
Tsuchida, Kenji: *See*—
Shiratake, Shinichiro; Takashima, Daisaburo; Tsuchida, Kenji; and Inaba, Tsuneo, 5,703,817, Cl. 365-200.000.
Tsuchida, Shinji; Takashima, Shoichi; and Izumi, Michihiro, to Canon Kabushiki Kaisha. Communication apparatus receiving information from portable information medium. 5,703,936, Cl. 379-88.000.
Tsuchinaga, Hiroyuki: *See*—

Kirino, Fumiyoshi; Toda, Tsuyoshi; Ide, Horishi; Sugiyama, Hisataka; Saito, Atsushi; Tsuchinaga, Hiroyuki; Maeda, Takeshi; Kugiya, Fumio; Kaku, Toshimitsu; Mita, Seiichi; Shigematsu, Kazuo; and Ouchi, Yasuhide, 5,703,855, Cl. 369-54.000.
Tsuchiya, Jiro: *See*—
Takahashi, Hiroyuki; Hamada, Makoto; Fujishima, Hiromichi; Naito, Masaaki; Sasaki, Kazuya; Tsuchiya, Jiro; and Maeda, Tomoharu, 5,702,123, Cl. 280-735.000.
Tsuda, Fumishiro: *See*—
Osada, Takayuki; Tsuda, Fumishiro; Saito, Norio; Ihara, Takeji; Wagatsuma, Yoshio; and Moriya, Hitoshi, 5,703,557, Cl. 336-92.000.
Tsuda, Shin: *See*—
Yoshida, Takehiro; and Tsuda, Shin, 5,703,698, Cl. 358-435.000.
Tsudaka, Takeichi: *See*—
Jester, Randy Douglas; Penoyer, John Arthur; Roth, Douglas Duane; Frank, Detlef; Onodera, Minoru; Tsudaka, Takeichi; Sato, Toshiaki; and Moritani, Tohei, 5,703,202, Cl. 528-481.000.
Tsuge, Kazutoshi: *See*—
Yamanaka, Naoki; and Tsuge, Kazutoshi, 5,701,777, Cl. 72-350.000.
Tsugi, Iwao: *See*—
Yamamoto, Shuko; Osakada, Takeya; and Tsugi, Iwao, 5,703,561, Cl. 138-33.000.
Tsui, Bing-Yue, to Industrial Technology Research Institute. Conductive photoresist to mitigate antenna effect. 5,702,566, Cl. 156-643.100.
Tsui, I-Hua. Apparatus for removing a vacuum bag of a ship stern. 5,701,836, Cl. 114-67.00A.
Tsuji, Kazuto: *See*—
Sono, Michio; Tsuji, Kazuto; Sakoda, Hideharu; Suzuki, Yoshimi; and Sakuma, Masao, 5,703,398, Cl. 257-706.000.
Tsuji, Suguru; and Uchizono, Yuichi, to Nippon Zeon Co., Ltd. Unsaturated nitrile-conjugated diene copolymer, process for producing same and vulcanizable rubber composition. 5,703,189, Cl. 526-338.000.
Tsujide, Tohru: *See*—
Nakamura, Toyokazu; Hanagama, Yasuko; Tsujide, Tohru; and Morohashi, Kenji, 5,703,492, Cl. 324-751.000.
Tsujimura, Manabu: *See*—
Kaji, Naruhiko; Nakano, Yutaka; Nakata, Rempei; Harada, Minoru; Shinjo, Ryoichi; and Tsujimura, Manabu, 5,702,673, Cl. 422-186.070.
Tsujino, Yasuko: *See*—
Evans, Steven L.; Harvey, John; and Tsujino, Yasuko, 5,703,019, Cl. 504-320.000.
Tsukada, Kazuo, to Alpha Corporation. Coin-operated locker. 5,701,988, Cl. 194-241.000.
Tsukagoshi, Tsuyoshi: *See*—
Kimura, Shuichi; and Tsukagoshi, Tsuyoshi, 5,702,352, Cl. 600-201.000.
Tsukamoto, Takeshi; Suzuki, Hiroshi; and Suzuki, Akira, to International Business Machines Corporation. Aseismic support structure. 5,702,087, Cl. 248-638.000.
Tsukude, Masaki: *See*—
Arimoto, Kazutami; and Tsukude, Masaki, 5,703,522, Cl. 327-534.000.
Tsukumo, Kenichi: *See*—
Matsunaga, Hironari; Tsukumo, Kenichi; Wakisaka, Shinji; and Yamane, Akio, 5,702,895, Cl. 435-6.000.
Tsunokawa, Masaru; Ozaki, Yukikatsu; Onimaru, Sadahisa; and Suzuki, Takahisa, to Denso Corporation; and Nipponsoken, Inc. Vehicular air temperature control system having excellent windshield defogging characteristics. 5,701,752, Cl. 62-183.000.
Tsuru, Yasutaka; Okamura, Takumi; Kimura, Shoji; Yamamoto, Yuji; Murata, Toshinori; Katsumata, Kenji; Akiyama, Moriyoshi; and Eda, Takanori, to Hitachi, Ltd. Video decoder/converter with a programmable logic device which is programmed based on the encoding format. 5,703,658, Cl. 348-554.000.
Tsurumi, Masayuki: *See*—
Takemoto, Takatoshi; and Tsurumi, Masayuki, 5,702,303, Cl. 463-37.000.
Tsurumi, Yoshihisa: *See*—
Katohno, Noboru; Tsurumi, Yoshihisa; and Iwama, Chikara, 5,703,737, Cl. 360-109.000.
Tsutaya, Hiroyuki: *See*—
Izumi, Jun; Yasutake, Akinori; Tsutaya, Hiroyuki; Harada, Takayuki; and Hamada, Kenichi, 5,702,505, Cl. 95-115.000.
Tsutsui, Kyoji: *See*—
Torii, Masafumi; Furuya, Hiromi; Shimada, Masaru; and Tsutsui, Kyoji, 5,703,005, Cl. 503-201.000.
Tsutsui, Toshiyuki; Yoshitsugu, Ken; Takahashi, Mamoru; and Todo, Akira, to Mitsui Petrochemical Industries, Ltd. Catalyst for olefin polymerization, process for olefin polymerization using the same, ethylene/α-olefin copolymer, graft modified ethylene/α-olefin copolymer, and ethylene copolymer composition. 5,703,180, Cl. 526-119.000.
Tsuzuki, Kazuo: *See*—
Itoh, Noriie; Kunihara, Mineo; Kushida, Hiroshi; McWhorter, William W.; Nomura, Syunji; Ozawa, Kazunori; Taniguchi, Mikio; and Tsuzuki, Kazuo, 5,703,071, Cl. 514-218.000.
Tucholski, Hans Juergen, to Analog Devices, Inc. Digital-to-analog converter having programmable transfer function errors and method of programming same. 5,703,586, Cl. 341-144.000.
Tucker, Eben E.: *See*—
Adam, Dan R.; Kempner, Kenneth M.; Vivino, Mark A.; Tucker, Eben E.; and Jones, Michael, 5,701,898, Cl. 128-661.090.
Tupper, David Edward: *See*—
Bunnell, Charles A.; Hotten, Terrence Michael; Larsen, Samuel D.; and Tupper, David Edward, 5,703,232, Cl. 540-557.000.
Turbomeca: *See*—
Paidassi, Serge; Ernoult, Jacques; Brun, Michel; Monge-Cadet, Pierre; Pauleau, Yves; and Farges, Guy, 5,702,829, Cl. 428-610.000.
Turcotte, David E.: *See*—
Conville, John J.; Chwalik, Robert; Desai, Shrikant V.; Turcotte, David E.; and Lyon, James T., 5,702,631, Cl. 252-76.000.
Turner, William D.: *See*—
Martin, Russel A.; Bruce, Richard H.; DuCosta, Victor M.; Fiske, Thomas G.; Lewis, Alan G.; Silverstein, Louis D.; Steemers, Hugo L.; Thompson, Malcolm J.; and Turner, William D., 5,703,621, Cl. 345-147.000.
Turra, Mario: *See*—
Neri, Armando; and Turra, Mario, 5,701,725, Cl. 53-466.000.
Tuthill Corporation: *See*—
O'Neal, Alan D.; Stone, Michael D.; and Coles, Carl R., 5,702,240, Cl. 418-9.000.
Tuttle, Ronald R.: *See*—
Suto, Mark J.; Girten, Beverly E.; Houghten, Richard A.; Loullis, Costas C.; and Tuttle, Ronald R., 5,703,042, Cl. 514-8.000.
Tveter, Torger. Device for a buoy-based wave power apparatus. 5,701,740, Cl. 60-505.000.
Twigt, Freddy; and Van Der Linde, Robert, to DSM N.V. Radiation curable binder composition for powder paint formulations. 5,703,198, Cl. 528-303.000.
Twist, Peter Jeffery, to Eastman Kodak Company. Redox amplification solutions containing metal ion sequestering agents. 5,702,873, Cl. 430-373.000.
Tyagi, Dinesh: *See*—
May, John W.; Tombs, Thomas N.; and Tyagi, Dinesh, 5,702,852, Cl. 430-47.000.
Tychinin, Anatolij I.: *See*—
Paramonov, Vladimir A.; Tychinin, Anatolij I.; Moroz, Anatolij I.; Birger, Boris L.; Frommann, Klaus; Haupt, Werner; and Ottersbach, Walter, 5,702,528, Cl. 118-623.000.
Tylko, Jozef K., to Refranco Corp. Method for the treatment of comminuted matter by electrical discharge. 5,702,621, Cl. 219-121.590.
U C B S.A.: *See*—
Cossement, Eric; Bodson, Guy; and Gobert, Jean, 5,703,082, Cl. 514-255.000.
U S West Technologies, Inc.: *See*—
Corey, Douglas Arthur; Landauer, Thomas K.; and Wonsiewicz, Bud C., 5,703,655, Cl. 348-468.000.
Uarco Incorporated: *See*—
Korondi, Joseph, Jr., 5,702,127, Cl. 283-81.000.
Ube Industries, Ltd.: *See*—
Adachi, Mitsuru; Sasaki, Hiroto; and Sato, Satoru, 5,701,942, Cl. 164-71.100.
Yokoi, Shinji; Nishida, Akira; Obata, Tokio; and Goka, Kouichi, 5,703,064, Cl. 514-80.000.
Uchida, Masaki; Naito, Takaki; Shirai, Hiroshi; Iino, Koichi; and Okazaki, Hiroyuki. Electrical connector. 5,702,269, Cl. 439-496.000.
Uchikawa, Akira: *See*—
Sakauchi, Kazuo; Hirano, Yoshihiro; and Uchikawa, Akira, 5,702,522, Cl. 117-2.000.
Uchikawa, Tetsuhide: *See*—
Ohtani, Yasuo; Kataho, Takuo; Satoh, Makoto; Tanaka, Tsutomu; Nose, Yoshimasa; Kobayashi, Kazuyoshi; Uchikawa, Tetsuhide; and Hamahata, Toshihiro, 5,703,901, Cl. 373-109.000.
Uchiyama, Akira: *See*—
Itoh, Yuichi; Kobayashi, Kyoko; Uchiyama, Akira; and Takehara, Toru, 5,702,827, Cl. 428-519.000.
Uchiyama, Yasuyuki: *See*—
Nakajima, Akihisa; Yabusaki, Masami; Hirata, Shoichi; Yamaguchi, Kenichi; Fujiwara, Shiokazu; Maruyama, Yasuo; Uchiyama, Yasuyuki; and Takemoto, Eriko, 5,703,941, Cl. 379-201.000.
Uchizono, Yuichi: *See*—
Tsuji, Suguru; and Uchizono, Yuichi, 5,703,189, Cl. 526-338.000.
Udou, Yurie: *See*—
Umemoto, Toshio; Fukuda, Masami; Shimoda, Kenji; Kitajima, Yasuo; Kobayashi, Isamu; and Udou, Yurie, 5,703,837, Cl. 368-88.000.
Ueda, Takashi: *See*—
Tashiro, Takashi; and Ueda, Takashi, 5,703,181, Cl. 526-140.000.
Ueki, Tomiji: *See*—
Kageyama, Hidehei; Ueki, Tomiji; and Mitsuya, Yoshihide, 5,702,193, Cl. 401-65.000.
Uemura, Kazuhiro; and Yamashita, Koji, to Sumitomo Wiring Systems, Ltd. Grommet. 5,701,634, Cl. 16-2.100.
Ueno, Makoto; Fujita, Katsutoshi; and Shimasaki, Tetsuo, to Matsushita Electric Industrial Co., Ltd. Field system assembly of commutator motor, commutator motor having field system assembly, and method for manufacturing field system assembly. 5,703,426, Cl. 310-258.000.
Ueno, Yuji: *See*—
Nakakura, Masashi; Ueno, Yuji; Hayakawa, Eiji; and Kuroda, Tokuyuki, 5,703,080, Cl. 514-253.000.
Uetake, Akihito: *See*—
Kanna, Shigeo; and Uetake, Akihito, 5,703,768, Cl. 363-98.000.
Nagate, Takashi; Uetake, Akihito; Koike, Yoshikazu; and Tabata, Kunio, 5,703,449, Cl. 318-254.000.
Ullman, Johan. Stretcher. 5,701,619, Cl. 5-625.000.

Ullmann, Roland; and Faulstich, Helmut, to Braun Aktiengesellschaft. Dry shaving apparatus with pivotally mounted long-hair trimmer. 5,701,673, Cl. 30-34.100.
Ulrich, Peter: *See—*
Bukrinsky, Michael L; Cerami, Anthony; and Ulrich, Peter, 5,703,086, Cl. 514-275.000.
Ulrich, Roland: *See—*
Brem, Ernst; Ulrich, Roland; and Stadelmann, Peter Werner, 5,701,731, Cl. 60-39.020.
Um, Min-Sik: *See—*
Park, Myung-Hyun; Koo, Myung-Kwon; and Um, Min-Sik, 5,702,569, Cl. 156-662.100.
Umeda, Hironori; Mashimo, Tohru; Hironaka, Kazuo; Nakahama, Tadamitsu; Yamane, Takakazu; Aizawa, Makoto; and Taniguchi, Yukifumi, to Mazda Motor Corporation. Method of applying a surface coating. 5,702,578, Cl. 204-486.000.
Umemoto, Toshio; Fukuda, Masami; Shimoda, Kenji; Kitajima, Yasuo; Kobayashi, Isamu; and Udou, Yurie, to Citizen Watch Co., Ltd. Watch with light transmitting type display plate. 5,703,837, Cl. 368-88.000.
Umeyama, Koichi; Ogasawara, Tadahiko; Yoshino, Kenji; Watanabe, Katsushi; and Koda, Koji, to Olympus Optical Co., Ltd. Apparatus for gene therapy. 5,702,384, Cl. 604-892.100.
Umiker, Hans, to Schoeller-Plast S.A. Bottle crate. 5,702,022, Cl. 220-509.000.
Umin, Gerald L.: *See—*
Branik, David P.; Roulinson, Daniel A.; and Umin, Gerald L., 5,701,737, Cl. 60-299.000.
Ungaro, Rocco: *See—*
Ohnishi, Yoshitake; Fujita, Jun-Ichi; Arduini, Arturo; Casnati, Alessandro; Pochini, Andrea; and Ungaro, Rocco, 5,702,620, Cl. 216-49.000.
Ungefug, Gary Allan; Wicker, Benjamin Marvin; Bible, James Richard; and Worley, Billy Thomas, Jr., to Para-Chem Southern, Inc. Polyacrylate thickener and method for making same. 5,703,176, Cl. 525-369.000.
Unger, John T.: *See—*
Law, Say-Jong; Jiang, Qingping; Fischer, Walter; Unger, John T.; and Krodel, Elizabeth K., 5,702,887, Cl. 435-6.000.
Unger, Liliane: *See—*
Steiner, Gerd; Munschauer, Rainer; Unger, Liliane; Teschendorf, Hans-Jürgen; and Höger, Thomas, 5,703,091, Cl. 514-300.000.
Uniplast, Inc.: *See—*
Maayeh, Elias Shukri, 5,703,153, Cl. 524-499.000.
Uniroyal Chemical Company, Inc.: *See—*
Rosenberg, Ronald Owen; Singh, Ajaib; Maupin, Christopher James; and Lombardo, Brian Scott, 5,703,193, Cl. 524-44.000.
Uniroyal Englebert Reifen GmbH: *See—*
Gerhards, Bernhard; Krutt, Hans-Jürgen; and Thissen, Wilhelm, 5,703,284, Cl. 73-146.000.
Unisia Jecs Corporation: *See—*
Hara, Seinosuke, 5,701,857, Cl. 123-90.160.
Shimizu, Hirokazu; and Machida, Kenichi, 5,703,285, Cl. 73-118.100.
Tomisawa, Naoki, 5,701,868, Cl. 123-424.000.
Unisys Corporation: *See—*
Wu, Gary C.; Pawar, Chandra S.; Leibowitz, Steven H.; Pullin, Edward J.; Hazzard, Michael J.; and Duggan, Joseph C., 5,704,052, Cl. 395-180.000.
United Cutlery Corporation: *See—*
Hall, David K.; and Rae, Kit, 5,701,675, Cl. 30-123.000.
United Kingdom of Great Britain and Northern Ireland, The Secretary of State for Scotland in Her Britannic Majesty's Government of the: *See—*
Ellis, Anthony E., 5,702,708, Cl. 424-261.100.
United Microelectronics Corporation: *See—*
Chen, Jone-Jane, 5,703,883, Cl. 370-501.000.
Hong, Gary, 5,703,387, Cl. 257-315.000.
Hsu, Jerry, 5,704,027, Cl. 395-133.000.
Ming-Tsung, Liu; Hsu, Bill Y. B.; Chung, Hsien-Dar; and Wu, Der-Yuan, 5,703,408, Cl. 257-784.000.
United States Department of Energy: *See—*
Dokos, James A., 5,702,335, Cl. 483-1.000.
Siriwardane, Ranjani V., 5,703,003, Cl. 502-400.000.
U.S. Natural Resources, Inc.: *See—*
Soest, Jon F., 5,703,960, Cl. 382-141.000.
United States of America
Agriculture: *See—*
Leathers, Timothy D.; Hayman, G. Thomas; and Cote, Gregory L., 5,702,942, Cl. 435-252.900.
Pearson, Thomas C., 5,703,784, Cl. 364-478.110.
Air Force: *See—*
Durkin, Edward B., 5,703,421, Cl. 310-61.000.
Army: *See—*
Flanigan, Dennis F., 5,703,276, Cl. 73-1.020.
Franchino, Anthony R.; and McDonald, Steven, 5,703,318, Cl. 89-37.070.
Kronenberg, Stanley; and Brucker, George J., 5,703,370, Cl. 250-376.000.
Nalbandian, Vahakn; and Lee, Choon Sae, 5,703,601, Cl. 343-700.0MS.
Resio, Donald T.; Briggs, Michael J.; Fowler, Jimmy E.; and Markle, Dennis G., 5,702,203, Cl. 405-26.000.
Sartore, Richard G., 5,703,361, Cl. 250-310.000.
Energy: *See—*
Barth, Clyde H.; and Cramer, Charles E., 5,702,293, Cl. 451-364.000.
McCormick, Steve H.; and Pigott, William R., 5,701,963, Cl. 175-215.000.
Smith, Paul H.; Brainard, James R.; Jarvinen, Gordon D.; and Ryan, Robert R., 5,702,683, Cl. 424-9.361.
Health and Human Services: *See—*
Adam, Dan R.; Kempner, Kenneth M.; Vivino, Mark A.; Tucker, Eben E.; and Jones, Michael, 5,701,898, Cl. 128-661.090.
Mulligan-Kehoe, Mary Jo, 5,702,892, Cl. 435-6.000.
Yang, Stringner S., 5,702,907, Cl. 435-7.100.
Navy: *See—*
Anderson, Kenneth D., 5,703,594, Cl. 342-123.000.
Cho, Chahee Peter; and Krol, William P., Jr., 5,702,273, Cl. 440-6.000.
Cho, Kichul, 5,704,057, Cl. 395-481.000.
Jasper, Norman H., 5,701,839, Cl. 114-264.000.
Meeker, Delbert Brent, 5,703,314, Cl. 89-1.110.
O'Brien, Francis J., Jr.; Nguyen, Chung T.; and Hammel, Sherry E., 5,703,906, Cl. 375-316.000.
Peckerar, Martin C.; and Marrian, Christie, 5,703,373, Cl. 250-491.100.
Pehrsson, Pehr E.; and Marchywka, Michael L., 5,702,586, Cl. 205-640.000.
U.S. Philips Corporation: *See—*
Borgis, Livio, 5,703,428, Cl. 313-318.100.
Dekker, Martijn J., 5,703,430, Cl. 313-409.000.
Geelhoed, Frans E. N., 5,702,117, Cl. 280-160.000.
Harrison, Guy N. P.; and Van Hest, Wilhelmus J. J., 5,702,002, Cl. 206-418.000.
Keyson, David V., 5,703,620, Cl. 345-145.000.
Peters, Matthias, 5,703,535, Cl. 330-278.000.
Smeets, Patrick E. G., 5,703,763, Cl. 363-20.000.
Snoeren, Rudolph M.; and Vugts, Coenraad A.A.M., 5,703,352, Cl. 250-208.100.
Teuling, Dirk J. A.; and Misdom, Johannes A. C., 5,703,444, Cl. 315-371.000.
Valster, Adriaan; De Poorter, Johannes A.; and Acket, Gerard A., 5,703,894, Cl. 372-46.000.
van de Water, Peter W. M.; Groenhuis, Roelf A. J.; and Schriks, Cornelis G., 5,703,401, Cl. 257-727.000.
United States Surgical Corporation: *See—*
Sarver, David; D'Alessio, Keith; and D'Alessio, Raymond A., 5,702,656, Cl. 264-102.000.
Sonderegger, Marcel, 5,701,664, Cl. 29-822.000.
United Technologies Automotive Systems, Inc.: *See—*
Javery, Robert P.; Lam, Daniel T.; Wright, James B.; and Poleschuk, Leroy A., 5,701,660, Cl. 29-622.000.
United Technologies Corporation: *See—*
Liebke, William R.; Dawson, David R.; Fredette, Mark A.; and Goodstein, Mark B., 5,702,288, Cl. 451-36.000.
Moore, Robert P., 5,702,232, Cl. 416-95.000.
Ouellette, David A., 5,702,233, Cl. 416-245.00R.
University Hospital, The: *See—*
Williams, Diane P.; and Murphy, John R., 5,703,039, Cl. 514-2.000.
University of British Columbia: *See—*
Boyle, Ross W.; Dolphin, David; and Johnson, Claire K., 5,703,230, Cl. 540-145.000.
University of California: *See—*
Hoy, Marjorie A.; and Presnail, James K., 5,702,932, Cl. 435-172.300.
University of California, The Regents of the: *See—*
Fu, Chi-Yung; and Petrich, Loren I., 5,703,965, Cl. 382-232.000.
University of Colorado, The Regents of the: *See—*
Pankove, Jacques Isaac; Moddel, Garret Robin; and Douglas, Kenneth, 5,703,896, Cl. 372-50.000.
University of Dundee: *See—*
Picksley, Steven Michael; and Lane, David Philip, 5,702,908, Cl. 435-7.800.
University of Florida: *See—*
Hoy, Marjorie A.; and Presnail, James K., 5,702,932, Cl. 435-172.300.
University of Kentucky Research Foundation, The: *See—*
Pienkowski, David A., 5,702,456, Cl. 623-18.000.
Wang, Xiang-Huai, 5,702,612, Cl. 210-703.000.
University of Massachusetts: *See—*
Ma, Chaoying; and Kowalak, Albert D., 5,702,836, Cl. 429-13.000.
University of Melbourne, The: *See—*
Martin, Thomas J.; Moseley, Jane M.; Kemp, Bruce E.; and Wettenhall, Richard E. H., 5,703,207, Cl. 530-324.000.
University of Minnesota, Regents of the: *See—*
Skubitz, Amy P. N.; and Furcht, Leo T., 5,703,205, Cl. 530-324.000.
University of Nebraska, The Board of Regents of the: *See—*
Porter, Thomas R., 5,701,899, Cl. 428-662.020.
University of Pennsylvania, The Trustees of the: *See—*
Greene, Mark I.; and Davis, James G., 5,702,948, Cl. 435-348.000.
Simoncelli, Eero; and Farid, Hany, 5,703,677, Cl. 356-4.040.
University of South Florida: *See—*
Newkome, George R.; and Weis, Claus, 5,703,271, Cl. 560-190.000.
Sanberg, Paul R.; Cameron, Don F.; and Borlongan, Cesario V., 5,702,700, Cl. 424-93.100.
University of Utah Research Foundation: *See—*
Trujillo, Edward M.; and Rappaport, Catherine, 5,702,949, Cl. 435-402.000.

University of Washington: *See—*
Silverstein, Fred E., 5,702,344, Cl. 600-104.000.
University of Washington, Board of Regents of the: *See—*
Beavo, Joseph A.; Corbin, Jackie D.; Ferguson, Kenneth M.; Francis, Sharron H.; Kadlecek, Ann; Loughney, Kate; McAllister-Lucas, Linda M.; Sonnenburg, William K.; and Thomas, Melissa K., 5,702,936, Cl. 435-196.000.
University Technologies International Inc.: *See—*
McPherson, Roger W.; Shrive, Nigel G.; Damson, Erich; Frank, Cyril B.; Lhenen, Fred; and Schachar, Norman S., 5,701,913, Cl. 128-774.000.
Uno, Takaaki: *See—*
Satou, Masaharu; Kasahara, Tamiyoshi; Murakami, Takuya; Kawagoe, Kenji; Uno, Takaaki; Aimoto, Hideo; and Horiuchi, Tamaki, 5,702,122, Cl. 280-691.000.
UOP: *See—*
Tae Tang, Man-Wing, 5,702,503, Cl. 95-45.000.
Urabe, Toshinaga. Pallet assembly. 5,701,827, Cl. 108-56.100.
Urairi, Kenichiro: *See—*
Hayashi, Hideki; Mizuno, Sadao; Ito, Noboru; Urairi, Kenichiro; and Komma, Yoshiaki, 5,703,856, Cl. 369-54.000.
Urakami, Tsuneyuki: *See—*
Nakamura, Takuya; Hirano, Isuke; Aoshima, Shinichiro; Takahashi, Hironori; and Urakami, Tsuneyuki, 5,703,491, Cl. 324-750.000.
Urbano, Roland: *See—*
Torrisi, Angelo M.; and Urbano, Roland, 5,703,927, Cl. 378-208.000.
Urben, Peter George, to Courtaulds Fibres (Holdings) Limited. Stabilised solutions of polysaccharide. 5,702,515, Cl. 106-200.200.
Urdea, Michael S.; and Horn, Thomas, to Chiron Corporation. Hydrophobic nucleic acid probe. 5,702,893, Cl. 435-6.000.
Urdea, Michael S.; and Horn, Thomas, to Chiron Corporation. Oligonucleotides containing hydroxyl-protecting groups orthogonally removable by reduction. 5,703,218, Cl. 536-23.100.
Urdea, Michael S.: *See—*
Kolberg, Janice A.; and Urdea, Michael S., 5,702,891, Cl. 435-6.000.
Uresil Corporation: *See—*
Goldberg, Robert, 5,702,468, Cl. 623-21.000.
Urmanski, James L.: *See—*
Meli, Vincent A.; Matharani, Michael A.; Brzezinski, Ted A.; Shaft, David L.; and Urmanski, James L., 5,701,724, Cl. 53-451.000.
USA Digital Radio Partners, L.P.: *See—*
Dapper, Mark J.; Carlin, Barry W.; and Geile, Michael J., 5,703,954, Cl. 381-15.000.
Usami, Yoshihisa, to Fuji Photo Film Co., Ltd. Method for driving matrix type flat panel display device. 5,703,615, Cl. 345-97.000.
Ushikoshi, Takeshi: *See—*
Horiuchi, Hiroshi; Momose, Yuichi; and Ushikoshi, Takeshi, 5,701,860, Cl. 123-182.100.
Utsumi, Yusuke: *See—*
Hayakawa, Koji; Nakajima, Isao; and Utsumi, Yusuke, 5,702,731, Cl. 425-125.000.
Uy, Rosa: *See—*
Yasis, Rafael M.; Uy, Rosa; Marcus, Barbara J.; and Kantner, Steven S., 5,702,753, Cl. 427-2.120.
Uzawa, Shigeru: *See—*
Sagenmüller, Alfons; Schubert, Hans-Herbert; Uzawa, Shigeru; and Saito, Kenichi, 5,703,132, Cl. 514-643.000.
V. A. Butler, Inc.: *See—*
Kuran, Christopher G.; Valley, Harold John; and Hayes, Raymond Eugene, 5,701,934, Cl. 137-625.460.
Vacuumschmelze GmbH: *See—*
Emmerich, Kurt; and Hein, Herbert, 5,703,559, Cl. 336-234.000.
Valcher, Fabrice: *See—*
Bricaud, Hervé Guy; and Valcher, Fabrice, 5,703,346, Cl. 235-44.100.
Valdunes: *See—*
Broucke, Jacques; and DeMilly, Francois, 5,702,141, Cl. 295-7.000.
Valeo Equipements Electriquest Moteur: *See—*
Lefebvre, Bruno; Jacquet, René; and Quentric, Jean-François, 5,703,551, Cl. 335-126.000.
Valley, Harold John: *See—*
Kuran, Christopher G.; Valley, Harold John; and Hayes, Raymond Eugene, 5,701,934, Cl. 137-625.460.
Valleylab Inc: *See—*
Arts, Gene H.; Carr, Jan E.; Kuk-Nagle, Karen T.; Lontine, Michael D.; and Millberg, Brian A., 5,702,387, Cl. 606-45.000.
Valmet Corporation: *See—*
Allonen, Harri, 5,703,574, Cl. 340-870.070.
Valmont Industries, Inc.: *See—*
Nguyen, Long Thanh, 5,703,438, Cl. 315-291.000.
Valster, Adriaan; De Poorter, Johannes A.; and Acket, Gerard A., to U.S. Philips Corporation. Radiation-emitting semiconductor diode and method of manufacturing such a diode. 5,703,894, Cl. 372-46.000.
Valyi, Emery I. Process for heat treating thermoplastic containers. 5,702,665, Cl. 264-521.000.
Van Buren, Wade: *See—*
Brunelli, Thad; Garrison, Gina; and Van Buren, Wade, 5,702,292, Cl. 451-41.000.
Vanden Berg, Ted A.: *See—*
Karur, Chandresekar R.; Vanden Berg, Ted A.; Jairazbhoy, Vivek A.; and Hitchen, Christopher, 5,703,290, Cl. 73-430.000.
Vandenbergh, Peter A.; Walker, Shirley A.; and Kunka, Blair S., to Quest International Flavors & Food Ingredients Company, a division of Indopco, Inc. Method of making a lactococcal bacteriocin. 5,702,923, Cl. 435-71.300.
Vandenbosche, Jean Jacques: *See—*
Lagrange, Alain; Vandenbosche, Jean Jacques; Cotteret, Jean; and Audousset, Marie Pascale, 5,703,266, Cl. 558-408.000.
van den Brink, Hans Gerard. Optical system for mutually positioning a pad carrying member and a multileaded component. 5,701,661, Cl. 29-721.000.
Van Den Mosselaar, Franciscus Laurentius Maria Theresia; Termaten, Gerrit Johannes; and Reuser, Leonardus Theodorus Maria, to Car Recycling Systems "CRS" B.V. Device for scrapping cars. 5,701,812, Cl. 100-91.000.
Vandepas, Robert J.: *See—*
Mulligan, Shaun T.; Vandepas, Robert J.; Shuler, James F.; and Almasy, Lawrence, 5,701,925, Cl. 137-119.050.
Vanderbilt University: *See—*
Beavo, Joseph A.; Corbin, Jackie D.; Ferguson, Kenneth M.; Francis, Sharron H.; Kadlecek, Ann; Loughney, Kate; McAllister-Lucas, Linda M.; Sonnenburg, William K.; and Thomas, Melissa K., 5,702,936, Cl. 435-196.000.
Thompson, Stuart A.; and Blaser, Martin J., 5,703,219, Cl. 536-23.200.
Van Der Linde, Robert: *See—*
Twigt, Freddy; and Van Der Linde, Robert, 5,703,198, Cl. 528-303.000.
van der Meulen, Wybren: *See—*
Martin, Wallace Anthony; van der Meulen, Wybren; Menezes, Edgar V.; Renkema, Kornelis; Phillips, Robert B.; Lust, Victor; Wu, Jongliang; and Eshuis, Gerbrand, 5,702,735, Cl. 425-548.000.
Vanderspurt, Thomas Henry; and Koveal, Russell John, to Exxon Research and Engineering Company. Isoalcohol synthesis. 5,703,133, Cl. 518-707.000.
van de Water, Peter W. M.; Groenhuis, Roelf A. J.; and Schriks, Cornelis G., to U.S. Philips Corporation. Miniature semiconductor device for surface mounting. 5,703,401, Cl. 257-727.000.
Van Duyne, Scott A.: *See—*
Pierce, John R.; and Van Duyne, Scott A., 5,703,313, Cl. 84-622.000.
Vanguard International Semiconductor Corporation: *See—*
Chen, Chung-Zen, 5,702,968, Cl. 437-52.000.
Chien, Rong-Wu; and Li, Hsiu-Lan, 5,702,869, Cl. 430-313.000.
Tseng, Horng-Huei, 5,702,967, Cl. 437-45.000.
Van Hest, Wilhelmus J. J.: *See—*
Harrison, Guy N. P.; and Van Hest, Wilhelmus J. J., 5,702,002, Cl. 206-418.000.
van Kruistum, Timothy. Portable image viewer. 5,703,624, Cl. 345-169.000.
Van Lommen, Guy Rosalia Eugéne; De Bruyn, Marcel Frans Leopold; and Janssens, Walter Jacobus Joseph, to Janssen Pharmaceutica, N.V. [(benzodioxan, benzofuran or benzopyran) alkylamino] alkyl substituted guanidines. 5,703,115, Cl. 514-456.000.
Van Noy, Stephen J.: *See—*
Brown, Kyle; Van Noy, Stephen J.; Woo, Yi-Ren; and Jensen, Lars D., 5,702,400, Cl. 606-107.000.
Van Scott, Eugene J.: *See—*
Yu, Ruey J.; and Van Scott, Eugene J., 5,702,688, Cl. 424-59.000.
Van Shaik, Floris A.: *See—*
Bidiville, Marc; Raeber, Eric; Arreguit, Javier; Buczek, Harthmuth; Van Shaik, Floris A.; Bauduin, François; and O'Keeffe, Denis, 5,703,356, Cl. 250-221.000.
van Sprang, Wilhelmus Gijsbertus Leonardus: *See—*
Rischke, Jorg Werner; and van Sprang, Wilhelmus Gijsbertus Leonardus, 5,702,583, Cl. 205-82.000.
Van Werven-Franssen, Gerda Hendrika Maria: *See—*
Klunder, Rento Willem; and Van Werven-Franssen, Gerda Hendrika Maria, 5,702,410, Cl. 606-194.000.
Varambally, Rajamohan: *See—*
Baroni, Andrea; Mastrodomenico, Giovanni; Taliercio, Michele; Capocelli, Piero; Carro, Luigi; and Varambally, Rajamohan, 5,703,821, Cl. 315-210.000.
Vargo, Terrence G.: *See—*
Koloski, Timothy S.; and Vargo, Terrence G., 5,703,173, Cl. 525-326.200.
Vari, Sandor G.; and Maarek, Jean-Michel I., to Cedars-Sinai Medical Center. Spectroscopic burn injury evaluation apparatus and method. 5,701,902, Cl. [illegible]
Varian Associates, Inc.: *See—*
Biberger, Maximilian; and Conci, Dennis, 5,702,573, Cl. 204-192.120.
Eckstein, James N.; Riaziat, Majid L.; and Virshup, Gary F., 5,703,706, Cl. 359-125.000.
Powell, Ronald Allan, 5,703,689, Cl. 356-432.000.
Vasudeva, Kailash C., to Maxtech Manufacturing Inc. Protective plug for use in welding of threaded bosses. 5,701,935, Cl. 138-89.000.
Vasudevan, Tirucherai Varahan: *See—*
Bae-Lee, Myongsuk; Falk, Nancy; and Vasudevan, Tirucherai Varahan, 5,703,032, Cl. 510-320.000.
Vaughan, Robert A.; Christian, Willard C.; Zimmer, John P.; and Mistopoulos, James E., to Standard Products Company, The. Exterior decorative surround molding module. 5,702,148, Cl. 296-146.900.
Vaughn, Steven A.; and Verkade, James A., to Hughes Aicraft Company. Predistortion linearizer and method employing uniplanar Magic T hybrids. 5,703,531, Cl. 330-149.000.
Vayda, John: *See—*
Dynan, Stephen; Shindle, Jack; and Vayda, John, 5,702,997, Cl. 501-[illegible]

Vega, Jose Luis: *See*—
Doumen, Achille Jules Edmond; Gooyaerts, Luc; and Vega, Jose Luis, 5,703,037, Cl. 510-444.000.
Vehar, Gordon A.: *See*—
Goeddel, David V.; Kohr, William J.; Pennica, Diane; and Vehar, Gordon A., 5,702,938, Cl. 435-226.000.
Veits, Joachim, to Roche Vitamins Inc. Process for making ascorbic acid. 5,702,579, Cl. 204-522.000.
Velocidata, Inc.: *See*—
Cohen, Uri; and Hollars, Dennis R., 5,703,740, Cl. 360-126.000.
Vemuganti, Murthy: *See*—
Swaminathan, Kumar; and Vemuganti, Murthy, 5,704,000, Cl. 395-2.160.
Vendrely, Tim: *See*—
Carls, Thomas A.; Melkent, Tony; Whiteside, Leo A.; and Vendrely, Tim, 5,702,460, Cl. 623-20.000.
Venetec International, Inc.: *See*—
Bierman, Steven F., 5,702,371, Cl. 604-180.000.
Vengsarkar, Ashish Madhukar: *See*—
DiGiovanni, David John; Judkins, Justin Boyd; Pedrazzani, Janet Renee; Vengsarkar, Ashish Madhukar; and Walker, Kenneth Lee, 5,703,978, Cl. 385-37.000.
Ventura, Pascal: *See*—
Solal, Marc; Ventura, Pascal; and Hode, Jean Michel, 5,703,427, Cl. 310-313.00D.
Venture Innovations, Inc.: *See*—
Mitchell, John R., 5,701,674, Cl. 30-41.000.
Vergnes, Alain; and Albert, Patrick, to Lucent Technologies Inc. Transmission system and multiplexing/demultiplexing equipment involving a justifiable bit stream. 5,703,915, Cl. 375-371.000.
Verhoeven, John F.: *See*—
Hunsicker, Jeffrey C.; Verhoeven, John F.; and McCunn, F. Scott, 5,703,251, Cl. 549-410.000.
Verhoeven, Michel: *See*—
Cahalan, Patrick T.; Verhoeven, Michel; Hendriks, Marc; and Cahalan, Linda, 5,702,818, Cl. 428-409.000.
Verhoeven, Teunes: *See*—
Boehringer, Wilfred E.; Verhoeven, Teunes; and Hutz, William V., 5,701,801, Cl. 92-166.000.
Verkade, James A.: *See*—
Vaughn, Steven A.; and Verkade, James A., 5,703,531, Cl. 330-149.000.
Ver Meer, Jim, to Pella Corporation. Installation fin for windows and doors. 5,701,780, Cl. 72-379.200.
Versatex Inc.: *See*—
Renteria, William, 5,702,326, Cl. 482-68.000.
VerStrate, Gary William: *See*—
Struglinski, Mark Joseph; VerStrate, Gary William; and Fetters, Lewis J., 5,703,171, Cl. 525-314.000.
Vezain, Gérard: *See*—
Geyer, Freddy; Vezain, Gérard; and Roux, Christian, 5,702,069, Cl. 244-161.000.
Vical Incorporated: *See*—
Felgner, Philip L.; Wolff, Jon Asher; Rhodes, Gary H.; Malone, Robert Wallace; and Carson, Dennis A., 5,703,055, Cl. 514-44.000.
Vicente, Francisca: *See*—
Morris, Sandra A.; Curotto, James E.; Bills, Gerald F.; Dreikorn, Sarah J.; Streicher, Stanley L.; Zink, Deborah L.; Thompson, John R.; Basilio, Angela; Pelaez, Fernando; Diez, Maria Teresa; and Vicente, Francisca, 5,702,929, Cl. 435-118.000.
Videau, Didier: *See*—
Dehennau, Claude; Depireux, Thierry; Fleche, Guy; Gosset, Serge; and Videau, Didier, 5,703,160, Cl. 525-54.240.
Vilander, Laura R.: *See*—
Andrews, William H.; Morser, Michael J.; and Vilander, Laura R., 5,702,931, Cl. 435-172.300.
Vilsmeier, Stefan; Lippstreu, Stefan; and Bertram, Michael, to BrainLAB Med. Computersysteme GmbB. Device for noninvasive stereotactic immobilization in reproducible position. 5,702,406, Cl. 606-130.000.
Vinader, Maria Victoria: *See*—
Armour, Duncan Robert; Evans, Brian; Middlemiss, David; Naylor, Alan; Pegg, Neil Anthony; Vinader, Maria Victoria; Giblin, Gerard Martin Paul; Hubbard, Tania; Hann, Michael Menteith; Lewell, Xiao-Qing; and Watson, Stephen Paul, 5,703,240, Cl. 546-210.000.
Vinson, Phillip Kyle: *See*—
Sherry, Alan Edward; Connor, Daniel Stedman; Stidham, Robert Emerson; and Vinson, Phillip Kyle, 5,703,033, Cl. 510-237.000.
Vinylex Corporation: *See*—
Edgman, Thomas J., 5,702,090, Cl. 256-19.000.
Vion, Michèle: *See*—
Charpentier, Bruno; Vion, Michèle; Bernard, Bruno; and Maignan, Jean, 5,702,710, Cl. 424-401.000.
Viral Technologies, Inc.: *See*—
Goldstein, Allan L.; and Wang, Su Sun, 5,702,707, Cl. 424-208.100.
Virginia Tech Intellectual Properties, Inc.: *See*—
Kingston, David G. I.; Chaudhary, Ashok Gopal; Gharpure, Milind Moreshwar; Rimoldi, John Matthew; and Gunatilaka, A. A. Leslie, 5,703,247, Cl. 548-962.000.
Virshup, Gary F.: *See*—
Eckstein, James N.; Riaziat, Majid L.; and Virshup, Gary F., 5,703,706, Cl. 359-125.000.
Visa International Service Association: *See*—
Bezy, E. William; and Chenevich, William, 5,703,344, Cl. 235-379.000.
Vision-Ease Lens, Inc.: *See*—
Hughes, Frank J., 5,702,645, Cl. 252-586.000.
Vision-Sciences, Inc.: *See*—
Harhen, E. Paul, 5,702,348, Cl. 600-124.000.
Viskase Corporation: *See*—
Nicholson, Myron Donald; Kajiwara, Edward Makoto; and DuCharme, Paul Edmund, Jr., 5,702,783, Cl. 428-34.800.
Vistek Electronics Ltd.: *See*—
Robinson, Roger N., 5,703,650, Cl. 348-413.000.
Vitek, Michael Peter; and Jacobsen, Jack Steven, to American Cyanamid Company. Amyloid precursor proteins and method of using same to assess agents which down-regulate formation of β-amyloid peptide. 5,703,209, Cl. 530-350.000.
Vivino, Mark A.: *See*—
Adam, Dan R.; Kempner, Kenneth M.; Vivino, Mark A.; Tucker, Eben E.; and Jones, Michael, 5,701,898, Cl. 128-661.090.
VLSI Technology, Inc.: *See*—
Brugge, Hunter Barham, 5,702,870, Cl. 430-314.000.
Gabriel, Calvin T.; and Laparra, Olivier F., 5,702,978, Cl. 437-65.000.
VMI Epe Holland B.V.: *See*—
Gutknecht, Heinz, 5,701,717, Cl. 53-117.000.
Vo, Huy Thanh, to Micron Technology, Inc. Threshold voltage scalable buffer with reference level. 5,703,500, Cl. 326-71.000.
Voelkel, Thomas: *See*—
Rheinberger, Volker; Moszner, Norbert; Salz, Ulrich; and Voelkel, Thomas, 5,703,249, Cl. 549-337.000.
Vogelbacher, Uwe Josef: *See*—
Baumann, Ernst; Rheinheimer, Joachim; Vogelbacher, Uwe Josef; Bratz, Matthias; Theobald, Hans; Gerber, Matthias; Westphalen, Karl-Otto; Walter, Helmut; and Rademacher, Wilhelm, 5,703,017, Cl. 504-227.000.
Vogelstein, Bert; Kinzler, Kenneth W.; and Hamilton, Stanley, to Johns Hopkins University, The. Chromosome I8Q loss and prognosis in colorectal cancer. 5,702,886, Cl. 435-6.000.
Vogelstein, Bert: *See*—
Kinzler, Kenneth W.; and Vogelstein, Bert, 5,702,903, Cl. 435-6.000.
Vogt, Reiner; Bernhard, Klaus; and Pfaff, Gerhard, to Merck Patent Gesellschaft mit ceschrankter Haftung. Gold pigments. 5,702,518, Cl. 106-439.000.
Voich, Jan Harriet. Bag that may be converted into a folding back rest for the beach or park. 5,701,979, Cl. 190-8.000.
Voirol, Peter: *See*—
Mallah, Mohamad; Linn, Horst; Saner, Niklaus; and Voirol, Peter, 5,703,343, Cl. 219-687.000.
Voith Sulzer Papiermaschinen GmbH: *See*—
Renn, Sandra; and Stotz, Wolf Gunter, 5,702,337, Cl. 492-7.000.
Voldman, Steven Howard; and Bakeman, Paul Evans, Jr. Multichip semiconductor structures with interchip electrostatic discharge protection, and fabrication methods therefore. 5,703,747, Cl. 361-111.000.
von der Lippe, Paul: *See*—
Brown, David; von der Lippe, Paul; and von der Lippe, Susan, 5,702,799, Cl. 428-143.000.
von der Lippe, Susan: *See*—
Brown, David; von der Lippe, Paul; and von der Lippe, Susan, 5,702,799, Cl. 428-143.000.
von Schnering, Hans-Georg; Becker, Winfried; Schwarz, Martin; Hettich, Bernhard; Hartweg, Martin; Walz, Leonhard; and Popp, Thomas, to Hoechst Aktiengesellschaft. Process for making high temperature Bi-Sr-Ca-Cu oxide superconductor. 5,703,021, Cl. 505-501.000.
von Schuckmann, Alfred: *See*—
Herold, Heiko; Wollenschläger, Axel; and von Schuckmann, Alfred, 5,702,362, Cl. 604-58.000.
Voorhees, Marc: *See*—
Forrestal, Lloyd; Voorhees, Marc; Chen, Yung-Ming; and Edrich, Richard A., 5,702,823, Cl. 458-450.000.
Voorhies, Douglas; and Foran, James, to Silicon Graphics, Inc. Method and an apparatus for generating reflection vectors which can be unnormalized and for using these reflection vectors to index locations on an environment map. 5,704,024, Cl. 395-126.000.
Vrevich, Theodore Shane. ESTOP—emergency stopping device for motorized uncaged vehicles. 5,701,977, Cl. 188-72.900.
Vry, Uwe; Sager, Ottmar; Strähle, Fritz; and Poxleitner, Martin, to Carl-Zeiss-Stiftung. Adapter for connecting a stereoscopic endoscope to electronic documentation devices. 5,702,350, Cl. 600-166.000.
Vu, Duy-Pach; Dingle, Brenda; and Cheong, Ngwe, to Kopin Corporation. Method of forming high density electronic circuit modules. 5,702,963, Cl. 437-41.0GS.
Vugts, Coenraad A.A.M.: *See*—
Snoeren, Rudolph M.; and Vugts, Coenraad A.A.M., 5,703,352, Cl. 250-208.100.
W. L. Gore & Associates, Inc.: *See*—
Rayburn, Gary L.; Riffle, Rob G.; Walburn, Frederick J.; and Williams, Benjamin G., 5,702,409, Cl. 606-151.000.
W. R. Grace & Co.-Conn.: *See*—
Arfaei, Ahmad; and Lambert, James F., 5,703,174, Cl. 525-329.900.
Owensby, Joseph E., 5,702,739, Cl. 426-87.000.
Wachtel, Jeffrey I.; and D'Andrade, Bruce M., to Wachtel, Jeffrey I. Complex action nail clipper. 5,701,672, Cl. 30-28.000.

Wachtendorf, Paul Trigg; Godbole, Sanjay Parushottam; and Rinker, Jeffrey Earle, to Standard Oil Company, The. Acrylonitrile recovery process. 5,703,268, Cl. 558-466.000.
Wachtler, Peter: *See*—
Heuer, Lutz; Wachtler, Peter; Kugler, Martin; Schrage, Heinrich; and Sasse, Klaus, 5,703,103, Cl. 514-365.000.
Wacker-Chemie GmbH: *See*—
Adler, Klaus; Gubisch, Erwin; and Sommerauer, Alois, 5,702,828, Cl. 428-540.000.
Dauth, Jochen; Herzig, Christian; Deubzer, Bernward; Schnitzer, Klaus; and Huettner, David, 5,703,190, Cl. 528-12.000.
Wada, Kunio: *See*—
Yanagisawa, Hiroaki; Fujita, Takashi; Fujimoto, Koichi; Yoshioka, Takao; Wada, Kunio; Oguchi, Minoru; Fujiwara, Toshihiko; and Horikoshi, Hiroyoshi, 5,703,096, Cl. 514-326.000.
Wada, Shinichi: *See*—
Shimizu, Osamu; Harada, Kazuya; Wada, Shinichi; Fujimoto, Tetsuya; and Inui, Takanari, 5,702,190, Cl. 400-341.000.
Wada, Shuichi: *See*—
Morita, Shingo; Fukui, Wataru; and Wada, Shuichi, 5,701,876, Cl. 123-630.000.
Wada, Takeo, to Cirrus Logic, Inc. Data retrieval system and method within a constant angular velocity CD-ROM. 5,703,850, Cl. 369-47.000.
Wadsworth, John F.: *See*—
Wright-Ott, Christine; Wadsworth, John F.; and Harris, Gerald R., 5,701,968, Cl. 180-65.100.
Wagatsuma, Yoshio: *See*—
Osada, Takayuki; Tsuda, Fumishiro; Saito, Norio; Ihara, Takeji; Wagatsuma, Yoshio; and Moriya, Hitoshi, 5,703,557, Cl. 336-92.000.
Wagenvoord, Robert Johan: *See*—
Hemker, Hendrick Coenraad; Wagenvoord, Robert Johan; and Kolde, Hans-Jurgen, 5,702,912, Cl. 435-13.000.
Wagner, John Lee. High performance swim fin. 5,702,277, Cl. 441-64.000.
Wagner Spray Tech Corporation: *See*—
Kieffer, Joseph W., 5,702,131, Cl. 285-139.300.
Wahlstrand, John D.: *See*—
Ecker, Robert M.; McClure, Lawrence C.; and Wahlstrand, John D., 5,702,427, Cl. 607-28.000.
Wai, George K.: *See*—
Hlivka, Linda M.; and Wai, George K., 5,702,644, Cl. 252-356.000.
Waibel, Hermann: *See*—
Birgmeir, Klaus; and Waibel, Hermann, 5,703,700, Cl. 358-487.000.
Waid, James D., to E-Systems, Inc. Apparatus and method using relative GPS positioning for aircraft precision approach and landing. 5,702,070, Cl. 244-183.000.
Waitz, Harold D.: *See*—
Segall, Paul E.; Sternberg, Hal; Waitz, Harold D.; and Segall, Judith M., 5,702,880, Cl. 435-1.200.
Wakahara, Ken, to NEC Corporation. Dry etching apparatus and method. 5,702,562, Cl. 156-626.100.
Wakatsuki, Kizuku: *See*—
Yamamoto, Keisaku; Wakatsuki, Kizuku; and Saba, Hayato, 5,703,151, Cl. 524-262.000.
Wake Forest University: *See*—
Berry, Joel L.; Ferrario, Carlos M.; Dean, Richard H.; and Newman, Virginia S., 5,702,419, Cl. 606-198.000.
Wakefield, I. Nelson: *See*—
Snyder, Thomas D.; and Wakefield, I. Nelson, 5,703,758, Cl. 361-752.000.
Wakimoto, Kunihisa: *See*—
Matsuoka, Chikara; Watadani, Takeshi; Wakimoto, Kunihisa; and Kinoshita, Yukihiro, 5,702,159, Cl. 297-452.480.
Wakisaka, Shinji: *See*—
Matsunaga, Hironari; Tsukumo, Kenichi; Wakisaka, Shinji; and Yamane, Akio, 5,702,895, Cl. 435-6.000.
Wakunaga Seiyaku Kabushiki Kaisha: *See*—
Matsunaga, Hironari; Tsukumo, Kenichi; Wakisaka, Shinji; and Yamane, Akio, 5,702,895, Cl. 435-6.000.
Walbro Corporation: *See*—
Hill, Gerald A., 5,702,237, Cl. 417-313.000.
Moss, Glenn A.; and Talaski, Edward J., 5,702,229, Cl. 415-55.400.
Walburn, Frederick J.: *See*—
Rayburn, Gary L.; Riffle, Rob G.; Walburn, Frederick J.; and Williams, Benjamin G., 5,702,409, Cl. 606-151.000.
Walch, Gilles; and Boileau, Pascal, to Tornier S.A. Device for the attachment of a glenoid prosthesis of the shoulder blade. 5,702,447, Cl. 623-16.000.
Walch, Gilles; and Boileau, Pascal, to Tornier SA. Humeral prosthesis incorporating a sphere. 5,702,457, Cl. 623-19.000.
Waldron, David W.; and Waldron, Richard J. Method of safely stretching and strengthening the lumbar spine and lumbar muscles. 5,702,333, Cl. 482-131.000.
Waldron, Richard J.: *See*—
Waldron, David W.; and Waldron, Richard J., 5,702,333, Cl. 482-131.000.
Wales, Kenneth S.; Paraschac, Joseph F.; and Stefanchik, David, to Ethicon Endo-Surgery, Inc. Articulating surgical instrument. 5,702,408, Cl. 606-139.000.
Walker, George Terrance: *See*—
Fraiser, Melinda S.; and Walker, George Terrance, 5,702,926, Cl. 435-91.200.
Walker, G. Kent: *See*—
Nuber, Ray; Moroney, Paul; and Walker, G. Kent, 5,703,877, Cl. 370-395.000.
Walker, Jerry L.; Lawson, James P.; and Gill, Bennie C., to Halliburton Energy Services, Inc. Perforating charge carrier assembly and method. 5,701,964, Cl. 175-4.600.
Walker, Kenneth Lee: *See*—
DiGiovanni, David John; Judkins, Justin Boyd; Pedrazzani, Janet Renee; Vengsarkar, Ashish Madhukar; and Walker, Kenneth Lee, 5,703,978, Cl. 385-37.000.
Walker, Robert: *See*—
Beausang, James; and Walker, Robert, 5,703,789, Cl. 364-489.000.
Walker, Rosemary. Sanitary napkin. 5,702,380, Cl. 604-385.100.
Walker, Shirley A.: *See*—
Vandenbergh, Peter A.; Walker, Shirley A.; and Kunka, Blair S., 5,702,923, Cl. 435-71.300.
Wallajapet, Palani Raj R.: *See*—
Shet, Ramakant Tukaram; and Wallajapet, Palani Raj R., 5,703,225, Cl. 536-59.000.
Walley, Donald M.: *See*—
Bean, Dennis L.; Malone, Philip G.; Sykes, Melvin C.; Tom, Judy C.; and Walley, Donald M., 5,702,651, Cl. 264-34.000.
Wallin, Peter E.: *See*—
Bracken, Peter W.; Brener, Jeffery R.; DiGirolamo, Martin V.; Mullinix, Sam E., Jr.; Stafford, Donald W.; and Wallin, Peter E., 5,702,812, Cl. 428-323.000.
Walter, Helmut: *See*—
Baumann, Ernst; Rheinheimer, Joachim; Vogelbacher, Uwe Josef; Bratz, Matthias; Theobald, Hans; Gerber, Matthias; Westphalen, Karl-Otto; Walter, Helmut; and Rademacher, Wilhelm, 5,703,017, Cl. 504-227.000.
Walthall, Kenneth: *See*—
Lemon, John; and Walthall, Kenneth, 5,702,598, Cl. 210-223.000.
Walz, Leonhard: *See*—
von Schnering, Hans-Georg; Becker, Winfried; Schwarz, Martin; Hettich, Bernhard; Hartweg, Martin; Walz, Leonhard; and Popp, Thomas, 5,703,021, Cl. 505-501.000.
Wampler, Francis M., III, to Leybold Inficon, Inc. Composite membrane and support assembly. 5,703,359, Cl. 250-288.000.
Wan, Shijie J., to Eastman Kodak Company. Method and apparatus for determining a gamut boundary and a gamut descriptor. 5,704,026, Cl. 395-131.000.
Wanbaugh, Linn: *See*—
Dobbs, Douglas B.; and Wanbaugh, Linn, 5,702,058, Cl. 239-343.000.
Wands, Jack R.; and Takahashi, Hiroshi, to General Hospital Corporation, The. Monoclonal antibodies which recognize an adenocarcinoma cell antigen. 5,703,213, Cl. 530-388.850.
Wang, Binan: *See*—
Kalthoff, Timothy V.; Wang, Binan; and Wu, Miaochen, 5,703,589, Cl. 341-172.000.
Wang, Chen-Jong; and Liang, Mong-Song, to Taiwan Semiconductor Manufacturing Company Ltd. Method for fabricating a tub structured stacked capacitor for a DRAM cell having a central column. 5,702,989, Cl. 438-397.000.
Wang, Chih-Hsien; Chen, Min-Liang; and Chang, Thomas, to Mosel Vitelic Inc. Double-poly monos flash EEPROM cell. 5,703,388, Cl. 257-315.000.
Wang, Haiyan: *See*—
Saksena, Anil K.; Girijavallabhan, Viyyoor M.; Lovey, Raymond G.; Pike, Russell E.; Wang, Haiyan; Liu, Yi-Tsung; Ganguly, Ashit K.; and Bennett, Frank, 5,703,079, Cl. 514-252.000.
Saksena, Anil K.; Girijavallabhan, Viyyoor M.; Lovey, Raymond G.; Pike, Russell E.; Wang, Haiyan; Liu, Yi-Tsung; Ganguly, Ashit K.; and Bennett, Frank, 5,703,236, Cl. 544-366.000.
Wang, Jen-Hu. Space-time tracker. 5,701,678, Cl. 33-268.000.
Wang, Jia-Yin: *See*—
Lin, Mao-Chao; and Wang, Jia-Yin, 5,703,911, Cl. 375-341.000.
Wang, Kenneth. Multishaft combination lock. 5,701,772, Cl. 70-284.000.
Wang, Paul J.: *See*—
Eisele, John F.; Mikelsons, Valdis; Lehman, Gaye K.; Wang, Paul J.; and Brandt, Patricia J. A., 5,702,803, Cl. 428-195.000.
Wang, Shay-Ping Thomas: *See*—
Pan, ShaoWei; and Wang, Shay-Ping Thomas, 5,703,801, Cl. 364-748.500.
Wang, Shou-Ting, to Yih Change Enterprise Co., Ltd. Automatic air cleaner. 5,702,507, Cl. 96-55.000.
Wang, Su Sun: *See*—
Goldstein, Allan L.; and Wang, Su Sun, 5,702,707, Cl. 424-208.100.
Wang, Tsan-Chi, to Insert Enterprise Co., Ltd. Auto-termination network cable connector. 5,702,261, Cl. 439-188.000.
Wang, Wei-Bo: *See*—
Li, Qun; Wang, Wei-Bo; Chu, Daniel T.; and Hasvold, Lisa Anne, 5,703,244, Cl. 548-557.000.
Wang, Xiang-Huai, to University of Kentucky Research Foundation. Method and apparatus for flotation separation. 5,702,612, Cl. 210-703.000.
Wang, Xintao; and Hay, Jennifer L., to Sulzer Intermedics Inc. Enhanced transcutaneous recharging system for battery powered implantable medical device. 5,702,431, Cl. 607-61.000.
Wang, Ynjiun P.: *See*—
Chu, John B.; Ju, Paul P.; and Wang, Ynjiun P., 5,702,059, Cl. 235-462.000.

Meyerson, Robert F.; and Wang, Ynjiun P., 5,703,349, Cl. 235-472.000.
Wang, Zhigong; and Berroth, Manfred, to Fraunhofer-Gesellschaft Zur Forderung der Angewandten Forschung e.V. Clock-recovery device having cascaded resonance amplifiers. 5,703,912, Cl. 375-354.000.
Wannagot, Gary A.; Keepers, Curtis Brent; Goebel, Timothy R.; Cwiakala, James M., Jr.; and Connors, Clifford J., to Litton Systems, Inc. Binocular night vision device and method of making and using the device. 5,703,354, Cl. 250-214.0VT.
Ward, Granville Geer: *See—*
Eckels, Phillip William; Sato, Kazuhiko; Woods, Daniel Christian; Ward, Granville Geer; Hayworth, Gregory Farin; and King, Christopher G., 5,701,744, Cl. 62-47.100.
Ward, Paul A., to Charles Stark Draper Laboratory, Inc., The. Sensor having an off-frequency drive scheme and a sense bias generator utilizing tuned circuits. 5,703,292, Cl. 73-504.020.
Ware, Steven: *See—*
DeWitt, Sheila H. H.; Kell, Michael; Pavia, Michael R.; Kiely, John S.; Schroeder, Mel C.; Stankovic, Charles J.; and Ware, Steven, 5,702,672, Cl. 422-131.000.
Warner, Donald R.; McCallops, John A.; and Estep, John M., to Ingersoll-Rand Company. Electronic push to start nutrunner. 5,701,961, Cl. 173-15.000.
Warner-Lambert Company: *See—*
Baragi, Vijaykumar; Boschelli, Diane Harris; Connor, David Thomas; and Renkiewicz, Richard Raymond, 5,703,119, Cl. 514-459.000.
Connor, David Thomas; and Gracheck, Stephen Joseph, 5,703,069, Cl. 514-211.000.
DeWitt, Sheila H. H.; Kell, Michael; Pavia, Michael R.; Kiely, John S.; Schroeder, Mel C.; Stankovic, Charles J.; and Ware, Steven, 5,702,672, Cl. 422-131.000.
Warren, Bruce G.: *See—*
Jovanovich, Alan F.; Warren, Bruce G.; Charron, Duane G.; and Duke, Steven B., 5,703,950, Cl. 380-23.000.
Washington Research Foundation: *See—*
Eyre, David R., 5,702,909, Cl. 435-7.900.
Washington University: *See—*
Atkinson, John P., 5,703,046, Cl. 514-12.000.
Wasitis, William A.: *See—*
Davis, James A.; Wasitis, William A.; and Barham, William F., 5,703,154, Cl. 524-525.000.
Wasley, Jan William Francis: *See—*
Chen, Xi; and Wasley, Jan William Francis, 5,703,237, Cl. 544-380.000.
Watadani, Takeshi: *See—*
Matsuoka, Chikara; Watadani, Takeshi; Wakimoto, Kunihisa; and Kinoshita, Yukihiro, 5,702,159, Cl. 297-452.480.
Watanabe, Genichiro: *See—*
Imamura, Toshihide; Kadotani, Kanichi; Hayakashi, Bunji; Imaizumi, Hisaakira; Shakushi, Tetsuo; Matsumoto, Toshihiko; and Watanabe, Genichiro, 5,701,950, Cl. 165-222.000.
Watanabe, Hideaki: *See—*
Imai, Kiyoshi; Watanabe, Hideaki; Kinoshita, Hiromi; and Yokoyama, Dai, 5,701,662, Cl. 29-741.000.
Watanabe, Hiroshi; Hirata, Toichi; Haga, Masakazu; Yamagata, Eiji; Fujishima, Kazuo; and Adachi, Hiroyuki, to Hitachi Construction Machinery Co., Ltd. Region limiting excavation control system for construction machine. 5,701,691, Cl. 37-348.000.
Watanabe, Katsushi: *See—*
Umeyama, Koichi; Ogasawara, Tadahiko; Yoshino, Kenji; Watanabe, Katsushi; and Koda, Koji, 5,702,384, Cl. 604-892.100.
Watanabe, Kazunori: *See—*
Honda, Kensuke; Murakami, Hiroshi; and Watanabe, Kazunori, 5,703,466, Cl. 320-23.000.
Watanabe, Kazuo: *See—*
Watari, Masao; Ishii, Kazuo; Kato, Yasuhiko; Ogawa, Hiroaki; Omote, Masanori; Watanabe, Kazuo; and Minamino, Katsuki, 5,704,013, Cl. 395-23.000.
Watanabe, Kazuyuki; Yanagihara, Hisayoshi; and Matsumoto, Shimako, to Showa Denko K.K. Propylene block copolymer and process for producing the same. 5,703,172, Cl. 525-323.000.
Watanabe, Kimiaki: *See—*
Ishida, Naruo; Saijyo, Yoshio; Arakawa, Shingo; Watanabe, Kimiaki; and Inaba, Hidehiro, 5,703,295, Cl. 73-593.000.
Watanabe, Masahiro: *See—*
Amano, Masahiko; Watanabe, Masahiro; Konishi, Hiroo; Tanifuji, Shinya; and Nakamura, Tomoharu, 5,703,791, Cl. 364-492.000.
Watanabe, Tohru, to Sanyo Electric Co., Ltd. Solid-state color image pickup device for reproducing a color image. 5,703,641, Cl. 348-274.000.
Watanabe, Toshiya; Noguchi, Masatoshi; Toyosawa, Takeshi; and Morita, Minoru, to Graphtec Corporation. Thermal head and head drive circuit therefor. 5,702,188, Cl. 400-120.050.
Watari, Masao; Ishii, Kazuo; Kato, Yasuhiko; Ogawa, Hiroaki; Omote, Masanori; Watanabe, Kazuo; and Minamino, Katsuki, to Sony Corporation. Map determination method and apparatus. 5,704,013, Cl. 395-23.000.
Watson, Daniel M., Jr.; Mednick, Melvin; and McKeon, Thomas M., to Larami Limited. Real sounds toy engine. 5,702,283, Cl. 446-397.000.
Watson, Stephen Paul: *See—*
Armour, Duncan Robert; Evans, Brian; Middlemiss, David; Naylor, Alan; Pegg, Neil Anthony; Vinader, Maria Victoria; Giblin, Gerard Martin Paul; Hubbard, Tania; Hann, Michael Menteith; Lewell, Xiao-Qing; and Watson, Stephen Paul, 5,703,240, Cl. 546-210.000.
Watterson, Scott R.; Dalebout, William T.; and Miller, Frank Troy, to ICON Health & Fitness, Inc. Cabinet treadmill with handle. 5,702,325, Cl. 482-54.000.
Watts, Simon, to Racal Radar Defence Systems Limited. Method and apparatus for estimating the detection range of a radar. 5,703,592, Cl. 342-93.000.
WCM Industries, Inc.: *See—*
Mulligan, Shaun T.; Vandepas, Robert J.; Shuler, James F.; and Almasy, Lawrence, 5,701,925, Cl. 137-119.050.
Weaver, Jon Neal. Anti-shoplifting security system. 5,703,566, Cl. 340-572.000.
Weaver, Laura A.: *See—*
Boggs, Andrew Keith; Hoang, Quy N.; Jacobs, Joe; Mullen, John Mark; Purrington, Challis; and Weaver, Laura A., 5,703,872, Cl. 370-252.000.
Weaver, Max A.: *See—*
Krutak, James J.; Cushman, Michael R.; Coates, Clarence A.; Parham, William W.; Weaver, Max A.; and Patonay, Gabor, 5,703,229, Cl. 540-140.000.
Webasto Sunroofs Inc: *See—*
Siebelink, Robert John, Jr.; and Racine, Lloyd G., 5,702,779, Cl. 428-14.000.
Webb, Alan D.: *See—*
Appleford, David E.; Lane, Brian W.; and Webb, Alan D., 5,701,614, Cl. 4-555.000.
Weber, Christian: *See—*
Grundei, Hans; Rudigier, Jürgen; and Weber, Christian, 5,702,471, Cl. 623-21.000.
Weber, Gregory T.: *See—*
Thomas, Christopher P.; McCombie, Jay C.; Weber, Gregory T.; Ehlers, Jeffery C.; and Soltis, Dennis A., 5,701,865, Cl. 123-339.110.
Webster, Craig; and Sadler, John, to Black & Decker Inc. Debris blowing apparatus. 5,701,632, Cl. 15-330.000.
Weder, Donald E., to Southpac Trust International, Inc. Optical effect material and methods. 5,701,720, Cl. 53-397.000.
Weder, Donald E.; and Corbett, Sue, to Southpac Trust International, Inc. Shipping carton and method for shipping floral groupings. 5,701,721, Cl. 53-397.000.
Weeks, Anthony R.; Norris, Mark D.; and Switzer, Steven A., to Motorola, Inc. Wafer holder for semiconductor applications. 5,703,493, Cl. 324-755.000.
Weete, John D.; and Griffith, George L., to Emulsion Technology, Inc. Process for obtaining highly purified phosphatidylcholine. 5,703,255, Cl. 554-83.000.
Wegener, Peter: *See—*
Rösch, Norbert; and Wegener, Peter, 5,702,777, Cl. 428-1.000.
Wegner, Bruce, to Wray-Tech Instruments, Inc. Surface mount torque load-cell. 5,703,333, Cl. 177-139.000.
Wei, Chengping; Shi, Song Q.; and Lee, Hsing-Chung, to Motorola. Integrated electro-optical package. 5,703,394, Cl. 257-433.000.
Weigand, Michael; Ganss, Werner; and Grehn, Martin, to FAG OEM und Handel AG. Guide ring for roller bearing. 5,702,187, Cl. 384-551.000.
Weiler, Rolf; and Schiel, Wolfgang, to ITT Automotive Europe GmbH. Set of brake pads for floating-caliper disc brake. 5,701,978, Cl. 188-73.320.
Weis, Claus: *See—*
Newkome, George R.; and Weis, Claus, 5,703,271, Cl. 560-190.000.
Weisshaupt, Dieter: *See—*
Back, Lothar; Herrmann, Gebhard; Nesper, Markus; and Weisshaupt, Dieter, 5,702,411, Cl. 606-157.000.
Welch Allyn, Inc.: *See—*
Wood, Robert J.; Pileski, Michael J.; and Pasik, Gregory E., 5,702,345, Cl. 600-109.000.
Welch, David F.; Mehuys, David G.; and Scifres, Donald R., to SDL, Inc. Semiconductor laser with integral spatial mode filter. 5,703,897, Cl. 372-50.000.
Welch, Michael: *See—*
Shan, Hongching; Herchen, Harald; and Welch, Michael, 5,702,530, Cl. 118-723.0MP.
Wellman, Rockie C.: *See—*
King, Douglas L.; Barclay, Alasdair G.; and Wellman, Rockie C., 5,704,045, Cl. 395-235.000.
Wells, Cindie M., to Kraft Foods, Inc. Rigid reclosable bacon package. 5,702,743, Cl. 426-129.000.
Welsing, Wolfgang: *See—*
Effing, Jochem; Grublke, Eberhard; Godbey, Kristin; and Welsing, Wolfgang, 5,702,720, Cl. 424-448.000.
Wen, Cheng P.; Rolph, Randy K.; and Zielinski, Timothy T., to Hughes Aircraft Company. MOCVD reactor system for indium antimonide epitaxial material. 5,702,532, Cl. 118-730.000.
Wendel, Lawrence D.: *See—*
Wendel, Patricia A.; and Wendel, Lawrence D., 5,702,324, Cl. 482-46.000.
Wendel, Patricia A.; and Wendel, Lawrence D. Wrist extensor exercise device. 5,702,324, Cl. 482-46.000.
Wendling, Daniel: *See—*
Kay, Stanley E.; Kaul, Pradeep; Parr, Michael I.; Avis, Graham; Corrigan, John E., III; Wendling, Daniel; and Mehta, Ashok D., 5,703,881, Cl. 370-468.000.
Weng, Chuan, to General Signal Corporation. Non-CFC refrigerant mixture. 5,702,632, Cl. 252-67.000.

Wenke, Gottfried; and Prota, Giuseppe, to Clairol, Incorporated. Melanoquaternary compounds and their use as hair dyes and for skin treatment. 5,702,712, Cl. 424-401.000.
Wennberg, Stig: *See—*
Albrektsson, Björn; Carlsson, Lars; Jacobsson, Magnus; Röstlund, Tord; and Wennberg, Stig, 5,702,473, Cl. 623-22.000.
Wenzel, James F.: *See—*
DeHaven, Robert Keith; and Wenzel, James F., 5,701,666, Cl. 29-831.000.
Werlich, Mark H.: *See—*
Fischer, Steven M.; Nordman, Robert G.; and Werlich, Mark H., 5,703,360, Cl. 250-288.000.
Werner, Jon Harald: *See—*
Cline, Troy Lee; Isensee, Scott Harlan; Poston, Ricky Lee; and Werner, Jon Harald, 5,704,009, Cl. 395-2.840.
Wescon Products Company: *See—*
Barnard, Michael A., 5,701,967, Cl. 180-19.300.
Wesp, Horst; and Dallhammer, Peter, to Carl Walther GmbH. Trigger mechanism for firearms. 5,701,698, Cl. 42-69.020.
West Bond Inc.: *See—*
Biggs, Kenneth L.; and Price, John Cairl, 5,702,049, Cl. 228-105.000.
West, Roderick Michael Peters: *See—*
Evans, Edward Kelley; and West, Roderick Michael Peters, 5,703,622, Cl. 345-154.000.
Westaim Technologies, Inc.: *See—*
Wu, Xingwei; Stiles, James Alexander Robert; Foo, Ken Kok; and Bailey, Phillip, 5,702,565, Cl. 156-643.100.
Western Atlas International, Inc.: *See—*
Beard, David R., 5,703,772, Cl. 364-422.000.
Tabarovsky, Leonty Abraham; and Rabinovich, Michael Boris, 5,703,773, Cl. 364-422.000.
Western Filter Corporation: *See—*
Suri, Kanwar; and Akian, Z. Paul, 5,702,592, Cl. 210-90.000.
Westinghouse Air Brake Company: *See—*
Griffin, Michael F.; and Pajan, James L., 5,702,774, Cl. 427-598.000.
Hawryszkow, Michael G., 5,701,975, Cl. 188-52.000.
Kanjo, Wajih; Smith, Eric; Demoise, Thomas J.; Girotti, Michael; McCabe, Thomas; Fessler, Charles B.; and Natschke, Scott, 5,701,974, Cl. 188-1.11R.
Kanjo, Wajih, 5,702,012, Cl. 213-62.00R.
Westinghouse Electric Corporation: *See—*
Hackstie, Louis F.; and Clayton, Peter J., 5,702,186, Cl. 384-117.000.
Wilhelm, John J.; and Schemberger, Herman, 5,703,916, Cl. 376-260.000.
Westphalen, Karl-Otto: *See—*
Baumann, Ernst; Rheinheimer, Joachim; Vogelbacher, Uwe Josef; Bratz, Matthias; Theobald, Hans; Gerber, Matthias; Westphalen, Karl-Otto; Walter, Helmut; and Rademacher, Wilhelm, 5,703,017, Cl. 504-227.000.
Wettenhall, Richard E. H.: *See—*
Martin, Thomas J.; Moseley, Jane M.; Kemp, Bruce E.; and Wettenhall, Richard E. H., 5,703,207, Cl. 530-324.000.
Weyerhaeuser Company: *See—*
Carlson, William C.; Hartle, Jeffrey E.; Salatas, Kathy; Harris, Amy; and Littke, Willis R., 5,701,699, Cl. 47-57.600.
Philips, Nicholas A.; and Keefe, Walter D., Jr., 5,702,054, Cl. 229-110.000.
Whalen, Robert G., to Chek-Med Systems, Inc. Diagnostic test composition. 5,702,911, Cl. 435-12.000.
Whang, Kong-Hyun: *See—*
Kim, Sang-Keun; Kim, Seoung-Ho; Lee, Haeng-Woo; Choi, Cheol-Kyu; Kim, Jeong-Deuk; Hong, Jin-Who; Kim, Chang-Soo; and Whang, Kong-Hyun, 5,703,139, Cl. 522-42.000.
Kim, Sang-Keun; Lee, Haeng-Woo; Choi, Cheol-Kyu; Kim, Jeong-Deuk; Hong, Jin-Who; Kim, Chang-Soo; and Whang, Kong-Hyun, 5,703,142, Cl. 522-90.000.
Whang, Wha-Tzong, to National Science Council. Gel-glass dispersed liquid crystals. 5,702,636, Cl. 252-299.010.
Wheeler, Larry A.: *See—*
Burke, James A.; Garst, Michael E.; and Wheeler, Larry A., 5,703,077, Cl. 514-249.000.
Whipple, Terry L.; and Stone, Glynnis E., to Kinetikos Medical, Inc. Thumb joint prosthesis and related method of implantation. 5,702,469, Cl. 623-21.000.
Whitaker Corporation, The: *See—*
Kling, John Phillip, 5,701,665, Cl. 29-825.000.
Millhimes, Wayne Leroy, 5,702,257, Cl. 439-79.000.
Steinman, Joseph Richard, 5,702,271, Cl. 439-676.000.
White, David B.: *See—*
White, Kenneth P.; and White, David B., 5,702,648, Cl. 261-142.000.
White, Ian Arthur: *See—*
Mettler, Stephen Clement; and White, Ian Arthur, 5,703,973, Cl. 385-14.000.
White, Kenneth P.; and White, David B., to Morgan & White Ltd., PA Corp. Self-contained room air humidifier. 5,702,648, Cl. 261-142.000.
White, Robert Ashton; and Steinbrecher, Lester, to Henkel Corporation. Applicator for flowable materials. 5,702,759, Cl. 427-142.000.
White, Robert D. Flotatation device propelled by human-powered ski machine. 5,702,274, Cl. 440-21.000.
White, Stanley A., to Boeing North American, Inc. Demodulating integrator/demultiplexer. 5,703,596, Cl. 342-194.000.
Whiteside, Leo A.: *See—*
Carls, Thomas A.; Melkent, Tony; Whiteside, Leo A.; and Vendrely, Tim, 5,702,460, Cl. 623-20.000.
Whitlow, Graham A.; Gungor, Mehmet N.; and Lovic, William R., to Eaton Corporation. Porosity-free electrical contact material, pressure cast method and apparatus. 5,701,993, Cl. 200-264.000.
Whitson, Duane Eugene; O'Connor, Michael Joseph; and Stapert, Curtis Allen, to Delco Electronics Corporation. Combination receptacle for interchangeable lamps in circuit boards. 5,702,254, Cl. 439-57.000.
Whitten, Jeffrey P.: *See—*
McDonald, Ian A.; Whitten, Jeffrey P.; and Cosford, Nicholas D., 5,703,100, Cl. 514-343.000.
Whittier, John R.; Cordoba, Sylvestre; and Diamond, Bruce H., to Symbiosis Corporation. Combination end cap and clip for biopsy forceps instrument. 5,702,080, Cl. 248-205.500.
Whittles, Franklyn Brian, to C J Wildbird Foods Ltd. Bird feeder. 5,701,842, Cl. 119-52.200.
Wicker, Benjamin Marvin: *See—*
Ungefug, Gary Allan; Wicker, Benjamin Marvin; Bible, James Richard; and Worley, Billy Thomas, Jr., 5,703,176, Cl. 525-369.000.
Wickham, Peter John, to Pacesetter, Inc. Apparatus and method of noise classification in an implantable cardiac device. 5,702,425, Cl. 607-9.000.
Wickstrom, Eric; and Le Bec, Christine, to Thomas Jefferson University. Solid phase synthesis of oligonucleotides with stereospecific substituted phosphonate linkages by pentavalent grignard coupling. 5,703,223, Cl. 536-25.330.
Widdison, Leon: *See—*
Hansen, Reinhard; Widdison, Leon; and Wurm, Wolfgang, 5,701,689, Cl. 36-115.000.
Widlund, Urban; and Hansson, Roy, to Mölnlycke AB. Resilient material and disposable, absorbent article comprising such a material. 5,702,378, Cl. 604-373.000.
Wiebenson, David: *See—*
Acres, John F.; Ginsburg, Alec; and Wiebenson, David, 5,702,304, Cl. 463-29.000.
Wieczorek, Alfred B.; Jones, Thomas Mark; and Sprenger, Michael Kent, to Motorola, Inc. Method and apparatus for fault isolation by a communication system tester. 5,703,479, Cl. 324-73.100.
Wiegand, Benjamin Carl: *See—*
Zyngier, Alexandre; Wiegand, Benjamin Carl; Figueroa, Alejandro; and Brunsman, Michael August, 5,703,025, Cl. 510-147.000.
Wierzbicki, Michel; Sauveur, Frédéric; Boussard, Marie-Francoise; Bonnet, Jacqueline; and Sabatini, Massimo, to Adir Et Compagnie. Thiophene compounds. 5,703,074, Cl. 514-231.500.
Wiesendanger, Walter: *See—*
Odink, Karel Gerrit; Clerc, Roger; Cerletti, Nico; Brüggen, Josef; Tarcsay, Lajos; Sorg, Clemens; and Wiesendanger, Walter, 5,702,920, Cl. 435-69.500.
Wiik, Rolf. Process of converting food waste to re-hydratable edible food. 5,702,746, Cl. 426-248.000.
Wijaranakula, Witiwat: *See—*
Mitani, Kiyoshi; and Wijaranakula, Witiwat, 5,702,973, Cl. 437-57.000.
Wilber, James Albert, to Thomson Consumer Electronics, Inc. Sawtooth generator with disturbance signal rejection for a deflection apparatus. 5,703,445, Cl. 315-387.000.
Wild, Stephen. Edible greeting card. 5,702,740, Cl. 426-87.000.
Wildrick, J. Preston: *See—*
Kern, John J.; Stein, Richard L.; and Wildrick, J. Preston, 5,701,893, Cl. 128-206.240.
Wilhelm, Donald M., to California Pellet Mill Company. Counter flow cooler. 5,701,683, Cl. 34-394.000.
Wilhelm, John J.; and Schemberger, Herman, to Westinghouse Electric Corporation. Apparatus and method for loosening a stuck reactor vessel stud. 5,703,916, Cl. 376-260.000.
Wilkinson, David P.: *See—*
Frost, Jonathan C.; Gascoyne, John M.; Hards, Graham A.; Wilkinson, David P.; and Prater, Keith B., 5,702,839, Cl. 429-42.000.
Wilkinson, Jim: *See—*
Smith, Adlai H.; Hunter, Robert O., Jr.; McArthur, Bruce; Blair, Steven; and Wilkinson, Jim, 5,702,662, Cl. 264-400.000.
Willbanks, George M. Method and system for producing a personalized video recording. 5,703,995, Cl. 386-52.000.
Willcock, William T.: *See—*
Miska, Richard A.; and Willcock, William T., 5,703,930, Cl. 379-57.000.
Williams, Benjamin G.: *See—*
Rayburn, Gary L.; Riffle, Rob G.; Walburn, Frederick J.; and Williams, Benjamin G., 5,702,409, Cl. 606-151.000.
Williams, Brett: *See—*
Manning, Troy A.; Merritt, Todd; and Williams, Brett, 5,703,813, Cl. 365-189.050.
Williams, Diane P.; and Murphy, John R., to University Hospital, The. Chimeric toxins. 5,703,039, Cl. 514-2.000.
Williams, Jon Paul Charles: *See—*
Reddersen, Brad R.; Shepard, Phillip W.; Moch, Rockie D.; and Williams, Jon Paul Charles, 5,703,347, Cl. 235-472.000.
Williams, Stephen D.: *See—*
Fezza, Richard J.; and Williams, Stephen D., 5,703,203, Cl. 528-483.000.
Williams, Thomas H., to Tee-Lok Corporation. Truss table with integrated positioning stops. 5,702,095, Cl. 269-37.000.

Williamson, Dan; Mills, James A.; and Ryan, John J., III, to Halliburton Company. Well perforator isolation apparatus and method. 5,701,957, Cl. 166-297.000.
Willingham, Gary Lewis: *See—*
Redlich, George Harvey; Willingham, Gary Lewis; and Chapman, John Steven, 5,703,105, Cl. 514-372.000.
Willingham, Suzan E. Stool extractor. 5,702,404, Cl. 606-122.000.
Willis, Bernard M.: *See—*
Smith, Daniel; Willis, Bernard M.; Marschke, Kenneth P., Jr.; Littlewood, Barry; Schoen, Vulgens; Gucker, Carl; Nordmeyer, Michael; and Miklewicz, Thaddeus, 5,701,656, Cl. 29-558.000.
Wilski, Lawrence F.: *See—*
Skelly, Jon M.; and Wilski, Lawrence F., 5,702,772, Cl. 427-536.000.
Wilson, John C.; and Alexandrovich, Peter S., to Eastman Kodak Company. Monofunctional n—(2—cyanoethenyl)sulfonamides. 5,703,265, Cl. 558-390.000.
Wilson, Robert; Beesley, Laurence Robert; and Flanagan, Robert H., to Gillette Company, The. Razor blade manufacture. 5,701,788, Cl. 76-104.100.
Wilson, Ronald E., to AGCO Corporation. Combine lock door over center closure apparatus. 5,702,300, Cl. 460-106.000.
Wilson, Scott R.: *See—*
McNeil, John R.; Naqvi, S. Sohail H.; and Wilson, Scott R., 5,703,692, Cl. 356-445.000.
Wilson Sporting Goods Co.: *See—*
Wozny, Thomas A., 5,702,310, Cl. 473-308.000.
Wilson, Steven E., to Board Of Regents, The University of Texas System. Methods and treatments for corneal healing with growth factors. 5,703,047, Cl. 514-12.000.
Wilson, Susan L.: *See—*
Landi, Curtis L.; and Wilson, Susan L., 5,701,621, Cl. 5-691.000.
Wilson, Thomas W., III, to Family Health International. Prophylactic device and production of same. 5,701,915, Cl. 128-842.000.
Wilson, Tom C.: *See—*
Haramoto, Cary; and Wilson, Tom C., 5,701,758, Cl. 62-503.000.
Wilson, William Larry: *See—*
Curtis, Kevin; and Wilson, William Larry, 5,703,705, Cl. 359-22.000.
Winans, Paul R.: *See—*
Fisher, Steven C.; Adams, Theodore C.; Stangeland, Maynard L.; Rietdyk, Jacob; and Winans, Paul R., 5,701,67[illegible], Cl. 29-890.010.
Windmöller & Hölscher: *See—*
Köhn, Uwe, 5,702,099, Cl. 271-101.000.
Wingen, Rainer; and Hornung, Barbara, to Hoechst Aktiengesellschaft. Phenanthridine derivatives, and their use in liquid crystalline mixtures. 5,702,638, Cl. 252-299.620.
Wingen, Rainer: *See—*
Escher, Claus; Harada, Takamasa; Illian, Gerhard; Rösch, Norbert; and Wingen, Rainer, 5,702,639, Cl. 252-299.000.
Winn-Deen, Emily Susan: *See—*
Grossman, Paul David; Fung, Steven; Menchen, Steven Michael; Woo, Sam Lee; and Winn-Deen, Emily Susan, 5,703,222, Cl. 536-24.300.
Winter, Kirt Alan: *See—*
Smith, Thomas G.; Winter, Kirt Alan; and Kurucz, Frank Anthony, 5,704,021, Cl. 395-109.000.
Winterer, Albert, to Texas Instruments Incorporated. Low cost system for FSK demodulation. 5,703,525, Cl. 329-300.000.
Wiscombe, Brent: *See—*
Chen, James C.; and Wiscombe, Brent, 5,702,432, Cl. 607-88.000.
Wisconsin Alumni Research Foundation: *See—*
Felgner, Philip L.; Wolff, Jon Asher; Rhodes, Gary H.; Malone, Robert Wallace; and Carson, Dennis A., 5,703,055, Cl. 514-44.000.
Wise, Adrian P.; and Birch, Nicholas, to Discovision Associates. Video decompression. 5,703,793, Cl. 364-514.00R.
Wisehart, John C.: *See—*
Bieberdorf, John W.; Wisehart, John C.; and Draper, Greg W., 5,703,484, Cl. 324-207.220.
Wislinski, Martin: *See—*
Iskra, Michael J.; and Wislinski, Martin, 5,702,55[illegible], Cl. 156-203.000.
Wissman, Charles H., to Tempo Research Corporation. Apparatus for detecting digital carrier signals on telephone cables. 5,703,481, Cl. 324-127.000.
Wistar Institute of Anatomy and Biology, The: *See—*
Santoli, Daniela; Rovera, Giovanni; and Cesano, Alessandra, 5,702,702, Cl. 424-93.710.
Wistuba, Lothar: *See—*
Hau, Gerhard; Wistuba, Lothar; and Hollmann, Josef, 5,703,917, Cl. 376-280.000.
Witco Surfactants GmbH: *See—*
Birkhan, Horst; Fender, Michael; Irrgang, Bernhard; Löffert, Christiane; and Schüssler, Simone, 5,703,035, Cl. 510-423.000.
Witherspoon, Leland; Buckberg, Gerald D.; and Akopian, Paul, to Sorin Biomedical Inc. Cardioplegia delivery apparatus and method of use. 5,702,358, Cl. 604-4.000.
Wittchow, Eberhard: *See—*
Köhler, Wolfgang; Kral, Rudolf; and Wittchow, Eberhard, 5,701,850, Cl. 122-235.230.
Witte, Kendall C.: *See—*
Mermelstein, Lois D.; and Witte, Kendall C., 5,703,629, Cl. 345-213.000.
Wohlrab, Juergen; and Herbert, Manfred, to Siemens Akiengesellschaft. Computed tomography apparatus with image production using fourier reconstruction. 5,703,920, Cl. 378-4.000.
Wojnarowski, Robert John; and Gorczyca, Thomas Bert, to General Electric Company. Fabrication and structures of two-sided molded circuit modules with flexible interconnect layers. 5,703,400, Cl. 257-723.000.
Wolf, Joerg: *See—*
Zabler, Erich; Wolf, Joerg; and Lutz, Markus, 5,703,293, Cl. 73-504.020.
Wolfe, Paul T.: *See—*
McLelland, Douglas M.; Wolfe, Paul T.; and Hein, Richard D., 5,702,094, Cl. 267-140.120.
Wolff, Jon Asher: *See—*
Felgner, Philip L.; Wolff, Jon Asher; Rhodes, Gary H.; Malone, Robert Wallace; and Carson, Dennis A., 5,703,055, Cl. 514-44.000.
Wolin, Ronald L.: *See—*
Afonso, Adriano; Kelly, Joseph M.; and Wolin, Ronald L., 5,703,090, Cl. 514-290.000.
Wollenschläger, Axel: *See—*
Herold, Heiko; Wollenschläger, Axel; and von Schuckmann, Alfred, 5,702,362, Cl. 604-58.000.
Wolpe, Stephen D.; Cerami, Anthony; and Sherry, Barbara. Macrophage inflammatory protein 2 (MIP-2). 5,703,206, Cl. 530-324.000.
Wong, Thomas: *See—*
Marshall, Trevor; Hui, Joseph Wing-Tak; and Wong, Thomas, 5,701,981, Cl. 191-12.400.
Wong, Wilbur E.; Lusher, David M.; and Hwang, William B., to Hughes Electronics. VHF inverter with self regulation for any load. 5,703,771, Cl. 363-134.000.
Wonka, Boris; Behrendt, Jürgen; and Imhof, Gerald, to Braun Aktiengesellschaft. Hand-held hair dryer. 5,701,681, Cl. 34-97.000.
Wonsiewicz, Bud C.: *See—*
Corey, Douglas Arthur; Landauer, Thomas K.; and Wonsiewicz, Bud C., 5,703,655, Cl. 348-468.000.
Woo, Sam Lee: *See—*
Grossman, Paul David; Fung, Steven; Menchen, Steven Michael; Woo, Sam Lee; and Winn-Deen, Emily Susan, 5,703,222, Cl. 536-24.300.
Woo, Suk Ha, to Samsung Electro-Mechanics Co., Ltd. Heat dissipating apparatus for a semiconductor device for use in a motor drive. 5,703,752, Cl. 361-704.000.
Woo, Yi-Ren: *See—*
Brown, Kyle; Van Noy, Stephen J.; Woo, Yi-Ren; and Jensen, Lars D., 5,702,400, Cl. 606-107.000.
Wood, Christopher; Cairns, James G., Jr.; and Harris, Walter D., to Model & Instrument Development Corporation. Prosthetic pylon having an enclosed compressible volume of fluid to support a patient's weight. 5,702,488, Cl. 623-27.000.
Wood, Daniel P., to Acme Electric Corporation. Combined terminal block mount and lamination stack keeper. 5,703,558, Cl. 336-192.000.
Wood, Kody Raymond: *See—*
Raissyan, Anousheh; Wood, Kody Raymond; Jacobi, Michael Joseph; King, Linda S.; Seydel, Lee Chopek; Torbert, Michele Pauline; and Leonard, Robert Gary, 5,703,935, Cl. 379-88.000.
Wood, Paul Thomas: *See—*
Colclough, Terence; Skinner, Philip; Woollins, John Derek; and Wood, Paul Thomas, 5,703,262, Cl. 558-112.000.
Wood, Robert J.; Pileski, Michael J.; and Pasik, Gregory E., to Welch Allyn, Inc. Video laparoscope with sealed video processor module and illumination unit. 5,702,345, Cl. 600-109.000.
Woodall, Weldon, to Groundwater Control, Inc. Containment wall installation process and apparatus. 5,701,692, Cl. 37-353.000.
Woodgate, Graham John: *See—*
Ezra, David; Woodgate, Graham John; Harrold, Jonathan; and Omar, Basil Arthur, 5,703,717, Cl. 359-462.000.
Woods, Daniel C.: *See—*
Eckels, Phillip William; and Woods, Daniel C., 5,701,742, Cl. 62-6.000.
Woods, Daniel Christian: *See—*
Eckels, Phillip William; Sato, Kazuhiko; Woods, Daniel Christian; Ward, Granville Geer; Hayworth, Gregory Farin; and King, Christopher G., 5,701,744, Cl. 62-47.100.
Woody, George R.; and Downer, Scott D., to Delco Electronics Corp. Inductive coupler assembly having its primary winding formed in a printed wiring board. 5,703,462, Cl. 320-2.000.
Woollins, John Derek: *See—*
Colclough, Terence; Skinner, Philip; Woollins, John Derek; and Wood, Paul Thomas, 5,703,262, Cl. 558-112.000.
WorldScape L.L.C.: *See—*
Rogina, Peter R.; and Macintosh, David, 5,703,961, Cl. 382-154.000.
Worldwide Integrated Resources, Inc.: *See—*
Morad, Fred I., 5,701,628, Cl. 15-150.000.
Worley, Billy Thomas, Jr.: *See—*
Ungefug, Gary Allan; Wicker, Benjamin Marvin; Bible, James Richard; and Worley, Billy Thomas, Jr., 5,703,176, Cl. 525-369.000.
Worth, Brian A.: *See—*
Gould, Scott Whitney; Furtek, Frederick Curtis; Keyser, Frank Ray, III; Worth, Brian A.; and Zittritsch, Terrance John, 5,703,498, Cl. 326-40.000.
Worth, Leroy, Jr.: *See—*
Modrich, Paul L.; Su, Shin-San; Au, Karin G.; Lahue, Robert S.; Cooper, Deani Lee; and Worth, Leroy, Jr., 5,702,894, Cl. 435-6.000.
Wozney, John M.: *See—*
Celeste, Anthony J.; and Wozney, John M., 5,703,043, Cl. 514-12.000.
Wozny, Thomas A., to Wilson Sporting Goods Co. Golf club with adjustable male hosel and ferrule. 5,702,310, Cl. 473-308.000.
Wray-Tech Instruments, Inc.: *See—*

Wegner, Bruce, 5,703,333, Cl. 177-139.000.
Wright, Ernest H. Pug mill water flow control system. 5,702,181, Cl. 166-40.000.
Wright, Gerald V., Jr., to Wright Strategies, Inc. System and method for completing an electronic form. 5,704,029, Cl. 395-149.000.
Wright, Howard Stanley, to Howard Wright Limited. X-ray cassette support apparatus. 5,703,925, Cl. 378-181.000.
Wright, James B.: *See—*
Javery, Robert P.; Lau, Daniel T.; Wright, James B.; and Poleschuk, Leroy A., 5,701,660, Cl. 29-622.000.
Wright, Paul George: *See—*
Nabity, Frederick Alan; Wright, Paul George; Hulinsky, Raymond; and Carson, Douglas Timothy, 5,701,646, Cl. 29-25.350.
Wright Strategies, Inc.: *See—*
Wright, Gerald V., Jr., 5,704,029, Cl. 395-149.000.
Wright, Timothy Chester: *See—*
Foo, Chek-Peng; Yeh, Huahn-Fern; Wright, Timothy Chester; and Shields, Anne Marie, 5,702,124, Cl. 280-735.000.
Wright-Ott, Christine; Wadsworth, John F.; and Harris, Gerald R., to Licile Salter Packard Children's Hospital at Stanford. Transitional power mobility aid for physically challenged children. 5,701,968, Cl. 180-65.100.
Wrobel, Andrew; and Badour, Leonard C., to Gigatek Memory Systems. Belt-driven tape cartridge with tape vibration damping pin. 5,703,741, Cl. 360-132.000.
Wroblowsky, Heinz-Jürgen; and König, Klaus, to Bayer Aktiengesellschaft. Process for the preparation of alkoxytriazolinones. 5,703,260, Cl. 558-8.000.
Wu, Der-Yuan: *See—*
Ming-Tsung, Liu; Hsu, Bill Y. B.; Chung, Hsien-Dar; and Wu, Der-Yuan, 5,703,408, Cl. 257-784.000.
Wu, Gary C.; Pawar, Chandra S.; Leibowitz, Steven H.; Pullin, Edward J.; Hazzard, Michael J.; and Duggan, Joseph C., to Unisys Corporation. Bit processing unit for performing complex logical operations within a single clock cycle. 5,704,052, Cl. 395-380.000.
Wu, I-Wei: *See—*
Hack, Michael G.; and Wu, I-Wei, 5,703,382, Cl. 257-72.000.
Wu, Jongliang: *See—*
Martin, Wallace Anthony; van der Meulen, Wybren; Menezes, Edgar V.; Renkema, Kornelis; Phillips, Robert B.; Lust, Victor; Wu, Jongliang; and Eshuis, Gerbrand, 5,702,735, Cl. 425-548.000.
Wu, Kuang: *See—*
Lee, Adam T.; Wu, Kuang; and Burton, Larry, 5,702,647, Cl. 261-114.500.
Wu, Miaochen: *See—*
Kalthoff, Timothy V.; Wang, Binan; and Wu, Miaochen, 5,703,589, Cl. 341-172.000.
Wu, Ming-Hsin. Expanding wall plug. 5,702,216, Cl. 411-32.000.
Wu, Shang-Qian: *See—*
Ishihara, Yoshio; Masusaki, Hiroshi; Wu, Shang-Qian; and Matsumoto, Koh, 5,703,365, Cl. 250-339.130.
Wu, Shing-sheng; and Chen, Po-quang. Coupling plate for spinal correction and a correction device of using the same. 5,702,392, Cl. 606-61.000.
Wu, Trans, to Amtran Technology Co., Ltd. Image screen adjustment apparatus for video monitor. 5,703,661, Cl. 348-673.000.
Wu, Wei: *See—*
Maniar, Papu D.; Blumenthal, Roc; Klein, Jeffrey L.; and Wu, Wei, 5,702,981, Cl. 437-192.000.
Wu, Xingwei; Stiles, James Alexander Robert; Foo, Ken Kok; and Bailey, Phillip, to Westaim Technologies, Inc. Process for laser scribing a pattern in a planar laminate. 5,702,565, Cl. 156-643.100.
Wuepper, Thomas E.: *See—*
McKibben, Kenneth D.; Gould, Alan P.; Wuepper, Thomas E.; Minor, Daniel D.; Salgat, Mark T.; Marthaler, David; Speaks, Jackie M.; Macheske, Robert L.; Good, David; Gillette, Richard A.; Bond, Philip L.; Coyle, Donald C.; Rentfrow, Darrell; Stiens, Thomas O.; and Stevens, Larry M., 5,701,945, Cl. 164-130.000.
Wulff, Claus: *See—*
Gittinger, Andreas; Wulff, Claus; Haupt, Heinrich; and Idel, Karsten-Josef, 5,703,204, Cl. 528-486.000.
Wurm, Wolfgang: *See—*
Hansen, Reinhard; Widdison, Leon; and Wurm, Wolfgang, 5,701,689, Cl. 36-115.000.
Wüstenhagen, Ulf: *See—*
Fels, Peter; Wüstenhagen, Ulf; and Steinke, Gerhard, 5,703,955, Cl. 381-18.000.
Wylie, L. Stephen: *See—*
Tarter, Fred B.; Greene, Jeffrey M.; De Fazio, Thomas J.; Peck, Jan; Wylie, L. Stephen; Magnotte, Mark M.; Hall, Del; and Tarter, Scott A., 5,704,044, Cl. 395-204.000.
Xera Technologies Ltd.: *See—*
Dam, Oscar G., 5,702,246, Cl. 432-95.000.
Xerox Corporation: *See—*
Hack, Michael G.; and Wu, I-Wei, 5,703,382, Cl. 257-72.000.
Malhotra, Shadi L., 5,702,804, Cl. 428-195.000.
Martin, Russel A.; Bruce, Richard H.; DeCosta, Victor M.; Fiske, Thomas G.; Lewis, Alan G.; Silverstein, Louis D.; Steemers, Hugo L.; Thompson, Malcolm J.; and Turner, William D., 5,703,621, Cl. 345-147.000.
Mishra, Satchidanand, 5,703,487, Cl. 324-456.000.
Schank, Richard L.; Renfer, Dale S.; Limburg, William W.; Kunzmann, Brendan W.; and Pai, Damodar M., 5,702,854, Cl. 430-59.000.
Xiao, Peter Hong: *See—*
Shin, Hyun Jong; and Xiao, Peter Hong, 5,703,532, Cl. 330-253.000.
Xie, Chenggang: *See—*
Kumar, Nalin; and Xie, Chenggang, 5,703,435, Cl. 313-495.000.
Xilinx, Inc.: *See—*
Trimberger, Stephen M., 5,703,759, Cl. 361-777.000.
Xing Inc.: *See—*
Omura, Kazuhiko; Iguchi, Masayoshi; Yoshiyama, Masatoshi; and Nishikawa, Hiroshi, 5,703,996, Cl. 386-68.000.
Xolox Corporation: *See—*
Bleeke, William F., 5,703,735, Cl. 360-105.000.
XOMA Corporation: *See—*
Ammons, William Steve; and Little, Roger G., 5,703,038, Cl. 514-2.000.
Xue, Chu-Biao; DeGrado, William F.; DeCicco, Carl Peter; and Jacobson, Irina Cipora, to DuPont Merck Pharmaceutical Company, The. Hydroxamic acid compounds as metalloprotease and TNF inhibitors. 5,703,092, Cl. 514-303.000.
Xue, Liang An, to AlliedSignal Inc. Bonding materials for anode to anode bonding and anode to interconnect bonding in solid oxide fuel cells. 5,702,837, Cl. 429-40.000.
Yabe, Hisao; Iida, Yoshihiro; Suzuki, Akira; Ito, Hideo; Tashiro, Yoshio; Yamazaki, Minoru; Tamada, Osamu; Nakazawa, Masaaki; and Yamaya, Koji, to Olympus Optical Co., Ltd. Endoscope system including endoscope and disposable protection cover. 5,702,347, Cl. 600-121.000.
Yabusaki, Masami: *See—*
Nakajima, Akihisa; Yabusaki, Masami; Hirata, Shoichi; Yamaguchi, Kenichi; Fujiwara, Shiokazu; Maruyama, Yasuo; Uchiyama, Yasuyuki; and Takemoto, Eriko, 5,703,941, Cl. 379-201.000.
Yach, Randy L.: *See—*
Hull, Richard; and Yach, Randy L., 5,703,809, Cl. 365-185.250.
Yadoiwa, Takeshi: *See—*
Yano, Masanao; Yadoiwa, Takeshi; and Yanase, Chie, 5,702,512, Cl. 106-31.750.
Yagasaki, Yoichi: *See—*
Tahara, Katsumi; Koyanagi, Hideki; Yagasaki, Yoichi; and Fujinami, Yasushi, 5,703,859, Cl. 369-84.000.
Yagi Antenna Co., Ltd.: *See—*
Sato, Yuzo; Kaneko, Katsumi; and Saito, Yasushi, 5,703,530, Cl. 330-149.000.
Yahiaoui, Ali: *See—*
Collier, Leslie Warren, IV; Yahiaoui, Ali; Johns, Eric Mitchell; and Durrance, Debra Hartley, 5,702,377, Cl. 604-361.000.
Yale University: *See—*
Bhattacharya, Debashis, 5,704,054, Cl. 395-388.000.
Yamada, Hiromu; and Okabe, Seiji, to NEC Corporation. Connection of electrical leads in electroluminescent light by means of parallel connection to a plurality of conductors. 5,703,326, Cl. 174-50.520.
Yamada, Jun: *See—*
Morishima, Shingo; Yamada, Jun; Kanehara, Kenji; and Yoshinaga, Tohru, 5,701,736, Cl. 60-297.000.
Sugita, Yukio; Aihara, Kintaro; Ishiyama, Sadayuki; and Yamada, Jun, 5,702,798, Cl. 428-131.000.
Yamada, Masaichi: *See—*
Kaku, Junichi; and Yamada, Masaichi, 5,701,872, Cl. 123-495.000.
Yamada, Nobuaki; Kozaki, Shuichi; Mizobe, Hoyo; Yoshida, Masahiko; and Suzuki, Kenji, to Sharp Kabushiki Kaisha; and Kanto Kagaku Kabushiki Kaisha. Polymeric compounds, and liquid crystal element using the same. 5,702,642, Cl. 252-299.660.
Yamada, Norio: *See—*
Fujimura, Hiroyuki; Suzuki, Takayuki; Yamada, Norio; Ichiki, Yoshiyuki; Maezawa, Akihiko; and Hayashi, Hideo, 5,702,572, Cl. 204-157.150.
Yamada, Satoshi: *See—*
Endo, Takayoshi; Ishizaki, Kazuhisa; Yamada, Satoshi; and Hamaguchi, Takeyuki, 5,702,264, Cl. 439-346.000.
Yamada, Shuji: *See—*
Matsumoto, Masashi; Saito, Yasushi; Ichihashi, Takao; and Yamada, Shuji, 5,703,888, Cl. 371-51.100.
Yamada, Tadataka; and Gantz, Ira, to Regents Of The University Of Michigan, The. Genes encoding melanocortin-4 receptor and methods of use. 5,703,220, Cl. 536-23.500.
Yamada, Yosuke; Sano, Shigeaki; Yoshida, Toshiji; and Kagitani, Toshio, to Japan Steel Works, Ltd., The. Method of and apparatus for extrusion-molding a laminated parison, and a vessel produced from the laminated parison. 5,702,664, Cl. 264-515.000.
Yamagata, Eiji: *See—*
Watanabe, Hiroshi; Hirata, Toichi; Haga, Masakazu; Yamagata, Eiji; Fujishima, Kazuo; and Adachi, Hiroyuki, 5,701,691, Cl. 37-348.000.
Yamagishi, Hisashi: *See—*
Higuchi, Hiroshi; and Yamagishi, Hisashi, 5,702,311, Cl. 473-373.000.
Yamaguchi, Hiroki: *See—*
Yamaguchi, Toshiaki; Takahashi, Nobumitsu; and Yamaguchi, Hiroki, 5,701,677, Cl. 33-1.00M.
Yamaguchi, Hiroyuki; Naito, Masayuki; Inayoshi, Satoshi; Doi, Nobuyuki; Saida, Kazunori; and Sumiya, Yasuhiko, to Nippondenso Co, Ltd. Air conditioner for an automobile. 5,701,949, Cl. 165-42.000.
Yamaguchi, Kenichi: *See—*
Nakajima, Akihisa; Yabusaki, Masami; Hirata, Shoichi; Yamaguchi, Kenichi; Fujiwara, Shiokazu; Maruyama, Yasuo; Uchiyama, Yasuyuki; and Takemoto, Eriko, 5,703,941, Cl. 379-201.000.

Yamaguchi, Noboru, to Yazaki Corporation. Connector structure. 5,702,265, Cl. 439-352.000.
Yamaguchi, Noboru: *See—*
Ohmae, Tadayuki; Hisada, Haruhiko; Hosoda, Kenichi; Yoshiya, Masahide; Komori, Yoshiyuki; Yamaguchi, Noboru; Fujiki, Tohru; and Yasuda, Noriyasu, 5,703,167, Cl. 525-207.000.
Yamaguchi, Satoshi: *See—*
Kishino, Takao; Onodaka, Koji; Tanaka, Mitsuru; and Yamaguchi, Satoshi, 5,703,610, Cl. 345-74.000.
Yamaguchi, Shoji: *See—*
Fukunaga, Hideki; Yamaguchi, Shoji; and Nomiyama, Takashi, 5,703,860, Cl. 369-102.000.
Yamaguchi, Tohru; and Kamo, Hiroaki, to Yazaki Corporation. Waterproof casing. 5,703,325, Cl. 174-50.000.
Yamaguchi, Toshiaki; Takahashi, Nobumitsu; and Yamaguchi, Hiroki, to NSK Ltd. Feeding apparatus capable of restraining a yawing motion. 5,701,677, Cl. 33-1.00M.
Yamaguchi, Yasuo, to Mitsubishi Denki Kabushiki Kaisha. Semiconductor pressure detecting device and manufacturing method of the device. 5,703,393, Cl. 257-419.000.
Yamaha Corporation: *See—*
Ikeya, Akira, 5,703,307, Cl. 84-603.000.
Kurakake, Yasushi; and Mizuno, Shigehiko, 5,703,310, Cl. 84-609.000.
Ohta, Shinichi, 5,703,311, Cl. 84-622.000.
Takahashi, Makoto; and Hasebe, Kiyoshi, 5,703,312, Cl. 84-626.000.
Tashiro, Masashi; and Kato, Hirokazu, 5,703,308, Cl. 84-609.000.
Yamakawa, Kengo: *See—*
Katsuyama, Yukio; and Yamakawa, Kengo, 5,703,843, Cl. 369-34.000.
Yamamichi, Yoshifumi, to Rohm Co., Ltd. Motor driving circuit. 5,703,451, Cl. 318-492.000.
Yamamoto, Akira: *See—*
Ichinohe, Shoji; Yamazaki, Toshio; and Yamamoto, Akira, 5,703,159, Cl. 525-54.300.
Yamamoto, Hiroshi: *See—*
Kojima, Yoshihiro; Yamamoto, Hiroshi; Maruno, Susumu; and Shimeki, Yasuharu, 5,703,963, Cl. 382-197.000.
Yamamoto, Keisaku; Wakatsuki, Kizuku; and Saba, Hayato, to Sumitomo Chemical Company, Limited. Rubber composition. 5,703,151, Cl. 524-202.000.
Yamamoto Kogaku Co., Ltd.: *See—*
Murata, Oritoshi; and Okamoto, Masahiko, 5,702,813, Cl. 428-332.000.
Yamamoto, Shuko; Osakada, Takeya; and Tsugi, Iwao, to Calsonic Kohwa Co., Ltd. Resistor device. 5,703,561, Cl. 338-53.000.
Yamamoto, Syouhei, to Oki Electric Industry Co., Ltd. Absolute value circuit capable of providing full-wave rectification with less distortion. 5,703,518, Cl. 327-354.000.
Yamamoto, Toshitaka: *See—*
Tamai, Tadamoto; and Yamamoto, Toshitaka, 5,702,228, Cl. 414-744.500.
Yamamoto, Yorihisa; Nishi, Yutaka; Nishimori, Takashi; Tokunaga, Hiroyuki; and Machino, Hideki, to Honda Giken Kogyo Kabushiki Kaisha. Vehicle steering control system. 5,703,775, Cl. 364-424.051.
Yamamoto, Yuji; and Ishikawa, Masazumi, to Noritsu Koki Co., Ltd. Film information communication apparatus, film information printing apparatus, information processing apparatus and index printer. 5,703,701, Cl. 358-487.000.
Yamamoto, Yuji: *See—*
Tsuru, Yasutaka; Okamura, Takumi; Kimura, Shoji; Yamamoto, Yuji; Murata, Toshinori; Katsumata, Kenji; Akiyama, Moriyoshi; and Eda, Takanori, 5,703,658, Cl. 348-554.000.
Yamamoto, Yuuri; Takahashi, Kenichi; Ohnishi, Hiroshi; Kunieda, Yoshinori; and Matsubara, Naoki, to Matsushita Electric Industrial Co., Ltd. Timing signal generator. 5,703,913, Cl. 375-354.000.
Yamanaka, Naoki; and Tsuge, Kazutoshi, to Toyota Jidosha Kabushiki Kaisha. Drawing method and apparatus. 5,701,777, Cl. 72-350.000.
Yamanaka, Yasutoshi: *See—*
Suzuki, Kazutaka; Yamanaka, Yasutoshi; and Sugimoto, Tatsuo, 5,701,852, Cl. 123-41.140.
Yamane, Akio: *See—*
Matsunaga, Hironari; Tsukumo, Kenichi; Wakisaka, Shinji; and Yamane, Akio, 5,702,895, Cl. 435-6.000.
Yamane, Kazuo: *See—*
Nishioka, Makoto; Yamane, Kazuo; Nishimura, Masaki; and Takahashi, Yoshiyuki, 5,702,850, Cl. 430-19.000.
Yamane, Takakazu: *See—*
Umeda, Hironori; Mashimo, Tohru; Hironaka, Kazuo; Nakahama, Tadamitsu; Yamane, Takakazu; Aizawa, Makoto; and Taniguchi, Yukifumi, 5,702,578, Cl. 204-486.000.
Yamano, Naoko: *See—*
Fujishima, Shizu; and Yamano, Naoko, 5,702,939, Cl. 435-233.000.
Yamaoka, Tsuguo: *See—*
Imai, Genji; Iwasawa, Naozumi; and Yamaoka, Tsuguo, 5,702,872, Cl. 430-326.000.
Yamasaki, Kazuyuki; Kataoka, Masaki; Sakata, Kazuyuki; and Imazu, Shirou, to Sharp Kabushiki Kaisha. Apparatus for treatment of waste water and/or exhaust gases containing fluorine and surface active agents. 5,702,594, Cl. 210-151.000.
Yamasaki, Kazuyuki; Yokotani, Atsushi; and Imazu, Shirou, to Sharp Kabushiki Kaisha. Apparatus and method for waste water treatment utilizing granular sludge. 5,702,604, Cl. 210-603.000.
Yamashita, Haruo: *See—*
Kuwahara, Yasuhiro; Yamashita, Haruo; and Fukushima, Tsumoru, 5,703,968, Cl. 382-269.000.
Yamashita, Katsuhiro: *See—*
Akamatsu, Mikio; Seki, Kenji; Yamashita, Katsuhiro; Kobayashi, Takeya; and Taniguchi, Takashi, 5,701,762, Cl. 62-636.000.
Yamashita, Koji: *See—*
Uemura, Kazuhiro; and Yamashita, Koji, 5,701,634, Cl. 16-2.100.
Yamate, Takashi, to Central Glass Company, Limited. Holographic ornament. 5,703,703, Cl. 359-1.000.
Yamauchi, Takeshi: *See—*
Sobue, Susumu; Yamauchi, Takeshi; and Mukainakano, Shinichi, 5,703,403, Cl. 257-751.000.
Yamaura, Tatsuo: *See—*
Kishino, Takao; Yamaura, Tatsuo; Onodaka, Koji; and Itoh, Shigeo, 5,703,611, Cl. 345-74.000.
Yamawaki, Akifumi: *See—*
Baba, Yoshitaka; Tadokoro, Motoo; and Yamawaki, Akifumi, 5,702,762, Cl. 427-212.000.
Yamaya, Koji: *See—*
Yabe, Hisao; Iida, Yoshihiro; Suzuki, Akira; Ito, Hideo; Tashiro, Yoshio; Yamazaki, Minoru; Tamada, Osamu; Nakazawa, Masaaki; and Yamaya, Koji, 5,702,347, Cl. 600-121.000.
Yamazaki, Kazumi: *See—*
Nakajima, Takeaki; and Yamazaki, Kazumi, 5,702,125, Cl. 280-834.000.
Yamazaki, Kenichi: *See—*
Fujiwara, Wataru; Hyoda, Junkoh; Yamazaki, Kenichi; and Kitamura, Noriko, 5,703,157, Cl. 524-822.000.
Yamazaki, Minoru: *See—*
Yabe, Hisao; Iida, Yoshihiro; Suzuki, Akira; Ito, Hideo; Tashiro, Yoshio; Yamazaki, Minoru; Tamada, Osamu; Nakazawa, Masaaki; and Yamaya, Koji, 5,702,347, Cl. 600-121.000.
Yamazaki, Noritsugu: *See—*
Kawada, Naoki; Yamazaki, Noritsugu; Imoto, Takafumi; and Ikura, Kiyoshi, 5,702,928, Cl. 435-121.000.
Yamazaki, Toshio: *See—*
Hiratani, Haruyuki; Nakada, Kazuhiko; Yamazaki, Toshio; and Ichinohe, Shoji, 5,703,143, Cl. 523-107.000.
Ichinohe, Shoji; Yamazaki, Toshio; and Yamamoto, Akira, 5,703,159, Cl. 525-54.300.
Yamori, Yukio: *See—*
Sugai, Ryuji; Murakami, Umeji; and Yamori, Yukio, 5,703,212, Cl. 530-360.000.
Yanagi, Hideki: *See—*
Yoshida, Satoshi; Yanagi, Hideki; Sakai, Kouichi; and Nawa, Masayoshi, 5,702,510, Cl. 106-31.600.
Yanagihara, Hisayoshi: *See—*
Watanabe, Kazuyuki; Yanagihara, Hisayoshi; and Matsumoto, Shimako, 5,703,172, Cl. 525-323.000.
Yanagihara, Yasuo: *See—*
Nakai, Satoru; Kaneta, Mayumi; Kikumoto, Yoshikazu; Hong, Yeong-Man; Kawai, Kazuyoshi; Takegata, Setsuko; Ishii, Kiyoshi; Yanagihara, Yasuo; and Hirai, Yoshikatsu, 5,702,698, Cl. 424-85.200.
Yanagisawa, Hiroaki; Fujita, Takashi; Fujimoto, Koichi; Yoshioka, Takao; Wada, Kunio; Oguchi, Minoru; Fujiwara, Toshihiko; and Horikoshi, Hiroyoshi, to Sankyo Company, Limited. Oxime derivatives, their preparation and their therapeutic use. 5,703,096, Cl. 514-326.000.
Yanase, Chie: *See—*
Yano, Masanao; Yadoiwa, Takeshi; and Yanase, Chie, 5,702,512, Cl. 106-31.750.
Yang, Angel A.; Druz, Loren L.; and Berman, Terry, to Hunt-Wesson, Inc. Process for making shelf-stable, ready-to-eat rice. 5,702,745, Cl. 426-242.000.
Yang, Heechung: *See—*
Amkraut, Alfred A.; and Yang, Heechung, 5,702,727, Cl. 424-491.000.
Yang, Ho-M. Sprinkler. 5,702,056, Cl. 239-206.000.
Yang, Hsi-Kung. Air pump with dual air intakes. 5,702,239, Cl. 417-512.000.
Yang, Lawrence R.: *See—*
Grewal, Harsimran S.; and Yang, Lawrence R., 5,703,502, Cl. 327-3.000.
Yang, Stringner S., to United States of America, Health and Human Services. Antibodies to the hepatocellular carcinoma oncogene and immunoassays using the same. 5,702,907, Cl. 435-7.100.
Yang, Tae Seok: *See—*
Lee, Doo Hee; and Yang, Tae Seok, 5,703,994, Cl. 386-52.000.
Yang, Tai-Her. Shunt-type speed control circuit having transient storage effect for a series or compound motor. 5,703,448, Cl. 318-245.000.
Yang, Yi-Teh. Disposable cup dispenser. 5,702,029, Cl. 221-221.000.
Yano, Junichi: *See—*
Ohgi, Tadaaki; and Yano, Junichi, 5,703,224, Cl. 536-29.200.
Yano, Keiichi: *See—*
Endo, Mitsuyoshi; Asai, Hironori; Yano, Keiichi; and Sato, Yoshitoshi, 5,703,397, Cl. 257-701.000.
Yano, Masanao; Yadoiwa, Takeshi; and Yanase, Chie, to Mitsubishi Pencil Co., Ltd. Oil ink composition. 5,702,512, Cl. 106-31.750.
Yanovsky, Eli, to Elementrix Technologies Ltd. Protected communication method and system. 5,703,948, Cl. 380-21.000.
Yaron, Ira: *See—*
Richter, Jacob; Pinchasik, Gregory; and Yaron, Ira, 5,702,414, Cl. 606-166.000.

Yasis, Rafael M.; Uy, Rosa; Marcus, Barbara J.; and Kantner, Steven S., to Minnesota Mining And Manufacturing Company. Method of manufacturing a diagnostic electrode. 5,702,753, Cl. 427-2.120.
Yasohara, Masahiro; Fujisaki, Yoshihiro; and Takada, Kazuyuki, to Matsushita Electric Industrial Co., Ltd. Driver for an induction motor. 5,703,459, Cl. 318-808.000.
Yasuda, Minoru; and Maki, Yasuhito, to Sony Corporation. Solid-state image sensing device and its driving method. 5,703,386, Cl. 257-230.000.
Yasuda, Noriyasu: *See—*
Ohmae, Tadayuki; Hisada, Haruhiko; Hosoda, Kenichi; Yoshiya, Masahide; Komori, Yoshiyuki; Yamaguchi, Noboru; Fujiki, Tohru; and Yasuda, Noriyasu, 5,703,167, Cl. 525-207.000.
Yasuhiro, Takai, to Nec Corporation. Syncronous dynamic semiconductor memory device using pipelined multi-bit prefetch architecture. 5,703,830, Cl. 365-233.000.
Yasumoto, Eiichi; Hatoh, Kazuhito; and Gamou, Takaharu, to Matsushita Electric Industrial Co., Ltd. Fuel cell device equipped with catalyst material for removing carbon monoxide and method for removing carbon monoxide. 5,702,838, Cl. 429-40.000.
Yasutake, Akinori: *See—*
Izumi, Jun; Yasutake, Akinori; Tsutaya, Hiroyuki; Harada, Takayuki; and Hamada, Kenichi, 5,702,505, Cl. 95-115.000.
Yatsuzuka, Shinichi: *See—*
Hagiwara, Yasumasa; and Yatsuzuka, Shinichi, 5,701,743, Cl. 62-6.000.
Yazaki Corporation: *See—*
Arai, Youichi; O'Toole, Brendan; Saigo, Tsutomu; Shimoyama, Kenichi; Kumagai, Ryo; and Takada, Yoshihide, 5,703,486, Cl. 324-427.000.
Endo, Takayoshi; Ishizaki, Kazuhisa; Yamada, Satoshi; and Hamaguchi, Takeyuki, 5,702,264, Cl. 439-346.000.
Igura, Toshinori; and Fukuda, Masaru, 5,703,279, Cl. 73-40.000.
Igura, Toshinori; and Fukuda, Masaru, 5,703,280, Cl. 73-40.000.
Kohno, Yasushi; Minami, Masayoshi; and Minamiguchi, Riichi, 5,701,700, Cl. 47-57.600.
Yamaguchi, Noboru, 5,702,265, Cl. 439-352.000.
Yamaguchi, Tohru; and Kamo, Hiroaki, 5,703,325, Cl. 174-50.000.
Yazawa, Hiroshi: *See—*
Yoshida, Sumio; Komazawa, Takashi; Kurihara, Kazuhiko; and Yazawa, Hiroshi, 5,702,657, Cl. 264-112.000.
Ydoate, Edward: *See—*
Boone, Joseph T.; Hillerich, Thomas Anthony, Jr.; Grispart, Gerald Robert; and Ydoate, Edward, 5,701,989, Cl. 198-448.000.
Yean, Leanirith: *See—*
Keita, Gabriel; Renaudineau, Joel; and Yean, Leanirith, 5,702,825, Cl. 428-500.000.
Yeh, Huahn-Fern: *See—*
Foo, Chek-Peng; Yeh, Huahn-Fern; Wright, Timothy Chester; and Shields, Anne Marie, 5,702,124, Cl. 280-735.000.
Yeh, Wen-Yu: *See—*
Shih, Tung-Sheng; Yeh, Wen-Yu; Chen, Chih-Chieh; and Lai, Chane-Yu, 5,702,506, Cl. 95-287.000.
Yerrace, Frank Dominic: *See—*
Heddle, Robert M.; Yerrace, Frank Dominic; and Dahl, Geoff, 5,703,794, Cl. 364-514.00R.
Yezrielev, Albert I.: *See—*
Cusumano, Joseph Victor; Diana, William Daniel; Emert, Jacob; Gorda, Keith Raymond; Schlosberg, Richard H.; Young, David A.; Yezrielev, Albert I.; Eckstrom, William Bernard; Manry, Edris Eileen; and Keenan, Michael John, 5,703,256, Cl. 554-224.000.
Yih Change Enterprise Co., Ltd.: *See—*
Wang, Shou-Ting, 5,702,507, Cl. 96-55.000.
Yin, Khin Swe; Yu, Kevin; and Gunther, John E., to Hughes Electronics. Photopolymer holographic decal for plastic substrate. 5,702,805, Cl. 428-195.000.
Ying, Shu-Lan; Huang, Yuan-Chang; Chen, Jue-Jye; and Mii, Yuh-Jier, to Taiwan Semiconductor Manufactoring, Company Ltd. Test site and a method of monitoring via etch depths for semiconductor devices. 5,702,956, Cl. 437-8.000.
Yioves, Niki: *See—*
Campbell, Thomas A.; Schreiber, Heinz H.; and Yioves, Niki, 5,703,593, Cl. 342-96.000.
Yishay, Oded; LaViolette, William P.; and Pechonis, Daniel W., to Motorola, Inc. Mask programmable security system for a data processor and method therefor. 5,704,039, Cl. 395-186.000.
YKK Corporation: *See—*
Sakakibara, Keisuke; Murasaki, Ryuichi; Daijyogo, Shinichi; and Minato, Tsuyoshi, 5,702,797, Cl. 428-100.000.
Shirodera, Tatsumi, 5,702,028, Cl. 221-166.000.
Suzuki, Yasutoshi, 5,701,833, Cl. 112-475.160.
Yokogawa Electric Corporation: *See—*
Toyama, Akira; and Shimizu, Kazuhiro, 5,703,515, Cl. 327-294.000.
Yokohama Rubber Co., Ltd., The: *See—*
Toyoshima, Takayuki; and Iida, Eiichi, 5,702,545, Cl. 152-209.00A.
Yokoi, Saeko: *See—*
Komiyama, Manabu; Sato, Shunichi; Sonetsuji, Noboru; Ishizaka, Tetsuo; and Yokoi, Saeko, 5,703,893, Cl. 372-43.000.
Yokoi, Shinji; Nishida, Akira; Obata, Tokio; and Goka, Kouichi, to Sankyo Company, Limited; and Ube Industries Ltd. Pesticidal combinations. 5,703,064, Cl. 514-80.000.
Yokokawa, Hiroshi: *See—*
Miyazaki, Shigeyuki; Yokokawa, Hiroshi; and Ninomiya, Yuichi, 5,703,637, Cl. 348-53.000.
Yokoshima, Minoru; Ohkubo, Tetsuo; Sasahara, Kazunori; Sato, Yoneji; and Baba, Yoko, to Nippon Kayaku Kabushiki Kaisha; and Nippon Polytech Corp. Photo-imaging resist ink and cured product thereof. 5,702,820, Cl. 428-413.000.
Yokosuka, Hirobumi: *See—*
Kiriyama, Norio; and Yokosuka, Hirobumi, 5,703,645, Cl. 348-388.000.
Yokota, Masatoshi: *See—*
Horiuchi, Kuniyasu; Endo, Seiichiro; Moriyama, Keiji; and Yokota, Masatoshi, 5,702,312, Cl. 473-377.000.
Yokotani, Atsushi: *See—*
Yamasaki, Kazuyuki; Yokotani, Atsushi; and Imazu, Shirou, 5,702,604, Cl. 210-603.000.
Yokoyama, Dai: *See—*
Imai, Kiyoshi; Watanabe, Hideaki; Kinoshita, Hiromi; and Yokoyama, Dai, 5,701,662, Cl. 29-741.000.
Yokoyama, Hajime: *See—*
Nakatani, Kazushi; Takagi, Akira; and Yokoyama, Hajime, 5,701,982, Cl. 192-3.300.
Yomoda, Kenju, to Samsung Electronics Co., Ltd. Lens drive apparatus. 5,703,730, Cl. 359-824.000.
Yoo, Jang-hoon: *See—*
Lee, Chul-woo; and Yoo, Jang-hoon, 5,703,862, Cl. 369-112.000.
Yoo, Jei-Hwon: *See—*
Yoo, Seung-Moon; and Yoo, Jei-Hwon, 5,703,811, Cl. 365-189.050.
Yoo, Seung-Moon; and Yoo, Jei-Hwon, to Samsung Electronocs Co., Ltd. Data output buffer circuit of semiconductor memory device. 5,703,811, Cl. 365-189.050.
Yoon, Hyung-su, to Samsung Electronics Co., Ltd. Television for storing and displaying still picture. 5,703,662, Cl. 348-728.000.
Yoon, Hyung-Sup; Lee, Jin-Hee; Park, Chul-Sun; and Pyun, Kwang-Eui, to Electronics and Telecommunications Research Institute. Method for isolating semiconductor device. 5,702,975, Cl. 437-61.000.
Yoshida Kogyo Co., Ltd.: *See—*
Hatakeyama, Yoshiharu; and Yuhara, Yukitomo, 5,702,666, Cl. 264-544.000.
Yoshida, Masahiko: *See—*
Yamada, Nobuaki; Kozaki, Shuichi; Mizobe, Hoyo; Yoshida, Masahiko; and Suzuki, Kenji, 5,702,642, Cl. 252-299.660.
Yoshida, Satoshi; Yanagi, Hideki; Sakai, Kouichi; and Nawa, Masayoshi, to Kao Corporation. Aqueous ink of pigment type. 5,702,510, Cl. 106-31.600.
Yoshida, Sumio; Komazawa, Takashi; Kurihara, Kazuhiko; and Yazawa, Hiroshi, to Nippon Oil Co., Ltd.; and Polymer Processing Research Institute Ltd. Method for the continuous production of a polyethylene material having high strength and high modulus of elasticity. 5,702,657, Cl. 264-112.000.
Yoshida, Takehiro; and Tsuda, Shin, to Canon Kabushiki Kaisha. Apparatus and method for facsimile transmission of synthesized images. 5,703,698, Cl. 358-435.000.
Yoshida, Toshiji: *See—*
Yamada, Yosuke; Sano, Shigeaki; Yoshida, Toshiji; and Kagitani, Toshio, 5,702,664, Cl. 264-515.000.
Yoshida, Wataru; Fukushima, Tetsuaki; Taniguchi, Hideki; and Abe, Hiroshi, to Kao Corporation. Process for producing aliphatic nitrile. 5,703,264, Cl. 558-316.000.
Yoshie, Toru, to Max Co., Ltd. Electric stapler. 5,702,047, Cl. 227-131.000.
Yoshiike, Nobuyuki: *See—*
Hashimoto, Kazuhiko; Yoshiike, Nobuyuki; and Morinaka, Katsuya, 5,703,367, Cl. 250-342.000.
Yoshinaga, Tohru: *See—*
Morishima, Shingo; Yamada, Jun; Kanehara, Kenji; and Yoshinaga, Tohru, 5,701,736, Cl. 60-297.000.
Yoshino, Kenichiro: *See—*
Ohtomo, Fumio; Hayashi, Kunihiro; Kodaira, Jun-ichi; Nishizawa, Hiroyuki; and Yoshino, Kenichiro, 5,703,718, Cl. 359-494.000.
Yoshino, Kenji: *See—*
Umeyama, Koichi; Ogasawara, Tadahiko; Yoshino, Kenji; Watanabe, Katsushi; and Koda, Koji, 5,702,384, Cl. 604-892.100.
Yoshino, Yoshihide, to Bestera K.K. Dismount method of large-sized tank by cutting the same and jack mechanism employed therefor. 5,701,652, Cl. 29-426.300.
Yoshioka, Takao: *See—*
Yanagisawa, Hiroaki; Fujita, Takashi; Fujimoto, Koichi; Yoshioka, Takao; Wada, Kunio; Oguchi, Minoru; Fujiwara, Toshihiko; and Horikoshi, Hiroyoshi, 5,703,096, Cl. 514-326.000.
Yoshitomi Pharmaceutical Industries, Ltd.: *See—*
Ike, Tetsuji; Inoue, Takeshi; and Ozaki, Yoshihiro, 5,703,150, Cl. 524-125.000.
Yoshitsugu, Ken: *See—*
Tsutsui, Toshiyuki; Yoshitsugu, Ken; Takahashi, Mamoru; and Todo, Akira, 5,703,180, Cl. 526-119.000.
Yoshiya, Masahide: *See—*
Ohmae, Tadayuki; Hisada, Haruhiko; Hosoda, Kenichi; Yoshiya, Masahide; Komori, Yoshiyuki; Yamaguchi, Noboru; Fujiki, Tohru; and Yasuda, Noriyasu, 5,703,167, Cl. 525-207.000.
Yoshiyama, Masatoshi: *See—*
Omura, Kazuhiko; Iguchi, Masayoshi; Yoshiyama, Masatoshi; and Nishikawa, Hiroshi, 5,703,996, Cl. 386-68.000.
Youmans, Albert P.: *See—*
Flesher, H. Kelly; and Youmans, Albert P., 5,703,755, Cl. 361-737.000.
Young, Christopher L.: *See—*

Oliver, Joseph J.; Young, Christopher L.; and Bednar, Richard D., 5,703,569, Cl. 340-605.000.
Young, David A.: *See*—
Cusumano, Joseph Victor; Diana, William Daniel; Emert, Jacob; Gorda, Keith Raymond; Schlosberg, Richard H.; Young, David A.; Yezrielev, Albert I.; Eckstrom, William Bernard; Manry, Edris Eileen; and Keenan, Michael John, 5,703,256, Cl. 554-224.000.
Young, Gordon W.: *See*—
Begum, Paul G.; and Young, Gordon W., 5,70[illegible],564, Cl. 340-539.000.
Young, James A., to Apple Computer, Inc. Method for colorflash reduction by copying color values between active and inactive window applications so as to minimize differing color cells between corresponding color maps. 5,703,627, Cl. 345-199.000.
Young, Paul M.: *See*—
Gottshall, Paul C.; and Young, Paul M., 5,701,870, Cl. 123-490.000.
Young, Robert W., to Doehler-Jarvis Technologies, Inc. Die casting machine and method. 5,701,944, Cl. 164-113.000.
Young, Robin Michael Kurt, to AEA Technology PLC. Manufacture of composite materials. 5,701,943, Cl. 164-97.000.
Yu, Chen-Hua: *See*—
Jang, Syun-Ming; Chen, Ying-Ho; and Yu, Chen-Hua, 5,702,977, Cl. 437-67.000.
Yu, Chen-Hua Douglas; and Jang, Sylin-Ming, to Taiwan Semiconductor Manufacturing Company Ltd. Method for forming intermetal dielectric with SOG etchback and CMP. 5,702,980, Cl. 437-187.000.
Yu, Jimmy; and Lewellen, Guy, to AlliedSignal, Inc. Adaptive carrier phase lock loop in a GPS receiver. 5,703,597, Cl. 342-357.000.
Yu, Kevin: *See*—
Yin, Khin Swe; Yu, Kevin; and Gunther, John E., 5,702,805, Cl. 428-195.000.
Yu, Ruey J.; and Van Scott, Eugene J., to Tristrata Technology, Inc. Amphoteric compositions and polymeric forms of alpha hydroxyacids, and their therapeutic use. 5,702,688, Cl. 424-59.000.
Yuan, Jun; and Chen, Xi, to Neurogen Corporation. Novel N-Aminoalkyl-2-anthracenecarboxamides; new dopamine receptor subtype specific ligands. 5,703,235, Cl. 544-363.000.
Yuan, Jun: *See*—
Chen, Xi; and Yuan, Jun, 5,703,083, Cl. 514-235.000.
Yuan, Yusheng: *See*—
Hushbeck, Donald F.; Yuan, Yusheng; and Davison, Douglas W., 5,701,959, Cl. 166-387.000.
Yuasa, Yasuhito; Hirota, Noriaki; Toyoda, Akinori; and Tatematsu, Hideki, to Matsushita Electric Industrial Co., Ltd. Toner. 5,702,858, Cl. 430-106.600.
Yuhara, Yukitomo: *See*—
Hatakeyama, Yoshiharu; and Yuhara, Yukitomo, 5,702,666, Cl. 264-544.000.
Yuumoto, Yoko: *See*—
Früh, Thomas; Pitterna, Thomas; Murata, Toshiki; Svensson, Lene D.; Yuumoto, Yoko; and Sakaki, Junichi, 5,703,106, Cl. 514-378.000.
Yvin, Jean-Claude; and Coste, Christian, to Laboratories Goemar S.A.; and Degremont. Method and system for the treatment of seeds and bulbs with ozone. 5,703,009, Cl. 504-116.000.
Zabler, Erich; Wolf, Joerg; and Lutz, Markus, to Robert Bosch GmbH. Rotational rate sensor with two acceleration sensors. 5,703,293, Cl. 73-504.020.
Zablocki, Jeffery A.: *See*—
Bovy, Philippe R.; Rico, Joseph G.; Rogers, Thomas E.; Tjoeng, Foe S.; and Zablocki, Jeffery A., 5,703,125, Cl. 514-539.000.
Zahedi, Amir. Modular bone implant with pan and pins. 5,702,475, Cl. 623-22.000.
Zajaczkowski, Michael J.; and Stutzman, Barbara A., to Adhesives Research, Inc. Non-corrosive, low volatiles-containing pressure sensitive adhesive. 5,703,169, Cl. 525-309.000.
Zajaczkowski, Michael J.; and Stutzman, Barbara A., to Adhesives Research, Inc. Non-corrosive, low volatiles-containing pressure sensitive adhesive. 5,703,170, Cl. 525-309.000.
Zakryk, John M. Water collection and dispensing machine. 5,701,749, Cl. 62-93.000.
Zambrano, Raffaele, to Consorzio per la Ricerca sulla Microelettronica nel Mezzogiorno. Power integrated circuit ("PIC") structure with a vertical IGBT. 5,703,385, Cl. 257-212.000.
Zara, Sebastian; and Barreca, Anthony. Brush cleaning and disinfecting device. 5,701,626, Cl. 15-38.000.
Zarif, Leila: *See*—
Pavia, Andre A.; Pucci, Bernard; Riess, Jean G.; and Zarif, Leila, 5,703,126, Cl. 514-562.000.
Zawadzki, Jerry: *See*—
Lum, Paul; Chang, Carl; and Zawadzki, Jerry, 5,701,901, Cl. 128-662.000.
Zawadzki, Silvia: *See*—
Opitz, Robert John; and Zawadzki, Silvia, 5,702,875, Cl. 430-492.000.
Zeber, Kenneth Arthur, to Motorola, Inc. Integrated circuit chip formed from processing two opposing surfaces of a wafer. 5,703,405, Cl. 257-777.000.
Zeftek, Inc.: *See*—
Peach, Walter J., Jr., 5,701,825, Cl. 105-355.000.
Zegeer, Jim. Furniture protector device. 5,702,791, Cl. 428-53.000.
Zell, Karl; and Seidel, Peter. Arrangement for connecting wiring backplanes and module circuit boards. 5,703,762, Cl. 361-816.000.
Zeneca Limited: *See*—
Aggarwal, Varinder Kumar; Abdel-Rahman, Hesham Nimer Hasan; and Lee, Hee Yoon, 5,703,246, Cl. 548-955.000.
Renfrew, Andrew Hunter Morris; and Shawcross, Andrew Paul, 5,703,215, Cl. 534-642.000.
Zhang, Zhaohong: *See*—
Ansari, Adil; and Zhang, Zhaohong, 5,703,583, Cl. 341-122.000.
Zhong, Sheng-Ping, to Meadox Medicals, Inc. Method of providing a substrate with a hydrophilic coating and substrates, particularly medical devices, provided with such coatings. 5,702,754, Cl. 427-2.120.
Zhou, Stephen Q., to Kabi Pharmacia Ophthalmics, Inc. Method for rapid implantation of shape transformable optical lenses. 5,702,441, Cl. 623-6.000.
Zhu, Xiao Feng, to Micronics Computers Inc. Mother board with flexible layout for accommodating computer system design options. 5,703,760, Cl. 361-785.000.
Zhu, Xiaodong T.: *See*—
Tehrani, Saied N.; Chen, Eugene; Durlam, Mark; and Zhu, Xiaodong T., 5,703,805, Cl. 365-173.000.
Zicker, Robert G.; and Dion, John K., to GTE Mobile Communication Service. Cordless telephone with integral caller ID display. 5,703,934, Cl. 379-61.000.
Zielinski, Timothy T.: *See*—
Wen, Cheng P.; Rolph, Randy K.; and Zielinski, Timothy T., 5,702,532, Cl. 118-730.000.
Zimmer, Inc.: *See*—
Jackson, Kenneth S.; Persons, Charles D.; Krebs, Robert D.; Price, Gregory G.; and Bales, Joel P., 5,702,388, Cl. 606-54.000.
Thongpreda, Nisra; Hori, Roy Y.; and Kyle, Richard F., 5,702,482, Cl. 623-23.000.
Zimmer, John P.: *See*—
Vaughan, Robert A.; Christian, Willard C.; Zimmer, John P.; and Mistopoulos, James E., 5,702,148, Cl. 296-146.900.
Zimmerman, Robert; and Marafino, Benedict J., Jr., to Chiron Corporation. Treatment for biological damage using a colony stimulating factor and a biological modifier. 5,702,697, Cl. 424-85.100.
Zink, Deborah L.: *See*—
Jayasuriya, Hiranthi; Lingham, Russell B.; Pelaez, Fernando; Sanchez, Manuel; Silverman, Keith C.; Singh, Sheo Bux; and Zink, Deborah L., 5,703,067, Cl. 514-179.000.
Morris, Sandra A.; Curotto, James E.; Bills, Gerald F.; Dreikorn, Sarah J.; Streicher, Stanley L.; Zink, Deborah L.; Thompson, John R.; Basilio, Angela; Pelaez, Fernando; Diez, Maria Teresa; and Vicente, Francisca, 5,702,929, Cl. 435-118.000.
Zittritsch, Terrance John: *See*—
Gould, Scott Whitney; Furtek, Frederick Curtis; Keyser, Frank Ray, III; Worth, Brian A.; and Zittritsch, Terrance John, 5,703,498, Cl. 326-40.000.
Ziv, Noam Abraham; and Padovani, Roberto, to Qualcomm Incorporated. Method and apparatus for determining signal strength in a variable data rate system. 5,703,902, Cl. 375-200.000.
Zoller, Gerhard: *See*—
Klingler, Otmar; Zoller, Gerhard; Jablonka, Bernd; Just, Melitta; Breipohl, Gerhard; Knolle, Jochen; König, Wolfgang; and Stilz, Hans Ulrich, 5,703,050, Cl. 514-18.000.
Zollinger, Mark L.: *See*—
Puckett, Wallace E.; Zollinger, Mark L.; and Corral, Fernando Del, 5,703,131, Cl. 514-642.000.
Zorner, Paul S.: *See*—
Caulder, Jerry; Crowley, R. Hugh; Zorner, Paul S.; and Evans, Steven L., 5,703,011, Cl. 504-130.000.
Caulder, Jerry; Crowley, R. Hugh; Zorner, Paul S.; and Evans, Steven L., 5,703,012, Cl. 504-130.000.
Caulder, Jerry; Crowley, R. Hugh; Zorner, Paul S.; and Evans, Steven L., 5,703,013, Cl. 504-131.000.
Caulder, Jerry; Crowley, R. Hugh; Zorner, Paul S.; and Evans, Steven L., 5,703,014, Cl. 504-142.000.
Zubok, Rafail: *See*—
Averill, Robert G.; Cohen, Robert C.; and Zubok, Rafail, 5,702,487, Cl. 623-23.000.
Zucker, Jane Elisa: *See*—
Khan, Mujibun Nisa; and Zucker, Jane Elisa, 5,703,989, Cl. 385-130.000.
Zwack, Eduard, to Siemens Aktiengesellschaft. Method and arrangement for determining the phase difference between clock signals in a communication equipment. 5,703,480, Cl. 324-76.820.
Zwickl, Craig M., to Eli Lilly and Company. Method for potentiating tissue plasminogen activator with β-lactoglobulin. 5,702,937, Cl. 435-212.000.
Zyngier, Alexandre; Wiegand, Benjamin Carl; Figueroa, Alejandro; and Brunsman, Michael August, to Procter & Gamble Company, The. Monohydric alcohol-free process for making a transparent pour molded personal cleansing bar. 5,703,025, Cl. 510-147.000.

LIST OF REISSUE PATENTEES

TO WHOM

PATENTS WERE ISSUED ON THE 30th DAY OF DECEMBER, 1997

NOTE— Arranged in accordance with the first significant character or word of the name (in accordance with city and telephone directory practice).

Aisin Seiki Kabushiki Kaisha: *See*—
Takamiya, Sanshiro; Yoshizawa, Michisuke; and Suzuki, Akira, RE. 35,707, Cl. 623-3.000.
Audibert, Françoise: *See*—
Phillips, Nigel; Audibert, Françoise; Bernard, Jean-Marie; Chedid, Louis; Lefrancier, Pierre; Level, Michel; and Parant, Monique, RE. 35,706, Cl. 514-8.000.
Beamish, David J.: *See*—
Koch, Frank J.; Vandervalk, Leon C.; and Beamish, David J., RE. 35,703, Cl. 324-230.000.
Bernard, Jean-Marie: *See*—
Phillips, Nigel; Audibert, Françoise; Bernard, Jean-Marie; Chedid, Louis; Lefrancier, Pierre; Level, Michel; and Parant, Monique, RE. 35,706, Cl. 514-8.000.
Cap, Heinrich; Ehr, Alois Von; and Zuckschwert, Edgar, to Papst Licensing, GmbH. Compact motor mount for information storage devices. RE. 35,702, Cl. 310-114.000.
Chedid, Louis: *See*—
Phillips, Nigel; Audibert, Françoise; Bernard, Jean-Marie; Chedid, Louis; Lefrancier, Pierre; Level, Michel; and Parant, Monique, RE. 35,706, Cl. 514-8.000.
Chiba, Ithussei; and Oe, Makoto, to Mitsubishi Rayon Co., Ltd. Plane light source unit. RE. 35,704, Cl. 359-619.000.
DeFelsko Corporation: *See*—
Koch, Frank J.; Vandervalk, Leon C.; and Beamish, David J., RE. 35,703, Cl. 324-230.000.
Doornek, James R.: *See*—
Watson, Gary E.; Doornek, James R.; and Fechter, Thomas P., RE. 35,700, Cl. 37-231.000.
Douglas Dynamics, L.L.C.: *See*—
Watson, Gary E.; Doornek, James R.; and Fechter, Thomas P., RE. 35,700, Cl. 37-231.000.
Ehr, Alois Von: *See*—
Cap, Heinrich; Ehr, Alois Von; and Zuckschwert, Edgar, RE. 35,702, Cl. 310-114.000.
Fechter, Thomas P.: *See*—
Watson, Gary E.; Doornek, James R.; and Fechter, Thomas P., RE. 35,700, Cl. 37-231.000.
Foley, Paul V., to MKS Instruments, Inc. Quadrupole mass spectrometer. RE. 35,701, Cl. 250-292.000.
Koch, Frank J.; Vandervalk, Leon C.; and Beamish, David J., to DeFelsko Corporation. Combination coating thickness gauge using a magnetic flux density sensor and an eddy current search coil. RE. 35,703, Cl. 324-230.000.
Lefrancier, Pierre: *See*—
Phillips, Nigel; Audibert, Françoise; Bernard, Jean-Marie; Chedid, Louis; Lefrancier, Pierre; Level, Michel; and Parant, Monique, RE. 35,706, Cl. 514-8.000.
Level, Michel: *See*—
Phillips, Nigel; Audibert, Françoise; Bernard, Jean-Marie; Chedid, Louis; Lefrancier, Pierre; Level, Michel; and Parant, Monique, RE. 35,706, Cl. 514-8.000.
Mitsubishi Rayon Co., Ltd.: *See*—
Chiba, Ithussei; and Oe, Makoto, RE. 35,704, Cl. 359-619.000.
MKS Instruments, Inc.: *See*—
Foley, Paul V., RE. 35,701, Cl. 250-292.000.
Moldovanyi, Jay F., to Nitrojection Corporation. Gas assisted injection molding apparatus utilizing sleeve and pin arrangement. RE. 35,705, Cl. 425-130.000.
Nitrojection Corporation: *See*—
Moldovanyi, Jay F., RE. 35,705, Cl. 425-130.000.
Oe, Makoto: *See*—
Chiba, Ithussei; and Oe, Makoto, RE. 35,704, Cl. 359-619.000.
Papst Licensing, GmbH: *See*—
Cap, Heinrich; Ehr, Alois Von; and Zuckschwert, Edgar, RE. 35,702, Cl. 310-114.000.
Parant, Monique: *See*—
Phillips, Nigel; Audibert, Françoise; Bernard, Jean-Marie; Chedid, Louis; Lefrancier, Pierre; Level, Michel; and Parant, Monique, RE. 35,706, Cl. 514-8.000.
Phillips, Nigel; Audibert, Françoise; Bernard, Jean-Marie; Chedid, Louis; Lefrancier, Pierre; Level, Michel; and Parant, Monique, to VACSYN Inc. Lipophila derivatives of muramylpeptides having properties of activating macrophages and compositions containing them. RE. 35,706, Cl. 514-8.000.
Suzuki, Akira: *See*—
Takamiya, Sanshiro; Yoshizawa, Michisuke; and Suzuki, Akira, RE. 35,707, Cl. 623-3.000.
Takamiya, Sanshiro; Yoshizawa, Michisuke; and Suzuki, Akira, to Aisin Seiki Kabushiki Kaisha. Apparatus for driving medical appliances. RE. 35,707, Cl. 623-3.000.
VACSYN Inc.: *See*—
Phillips, Nigel; Audibert, Françoise; Bernard, Jean-Marie; Chedid, Louis; Lefrancier, Pierre; Level, Michel; and Parant, Monique, RE. 35,706, Cl. 514-8.000.
Vandervalk, Leon C.: *See*—
Koch, Frank J.; Vandervalk, Leon C.; and Beamish, David J., RE. 35,703, Cl. 324-230.000.
Watson, Gary E.; Doornek, James R.; and Fechter, Thomas P., to Douglas Dynamics, L.L.C. Removable snowplow assembly with pivotable lift stand. RE. 35,700, Cl. 37-231.000.
Yoshizawa, Michisuke: *See*—
Takamiya, Sanshiro; Yoshizawa, Michisuke; and Suzuki, Akira, RE. 35,707, Cl. 623-3.000.
Zuckschwert, Edgar: *See*—
Cap, Heinrich; Ehr, Alois Von; and Zuckschwert, Edgar, RE. 35,702, Cl. 310-114.000.

LIST OF REEXAMINATION PATENTEES

TO WHOM

CERTIFICATES WERE ISSUED

Castellano, John P. Long-travel rear suspension system for bicycles. B1 474,318, Cl. 280-284.000.
Hashi, Kunio: *See*—
Ueda, Seigo; Hashi, Kunio; Shiokari, Takashi; and Kusai, Akira, B1 044,091, Cl. 34-303.000.
Kusai, Akira: *See*—
Ueda, Seigo; Hashi, Kunio; Shiokari, Takashi; and Kusai, Akira, B1 044,091, Cl. 34-303.000.
Sankyo Company, Limited: *See*—
Ueda, Seigo; Hashi, Kunio; Shiokari, Takashi; and Kusai, Akira, B1 044,091, Cl. 34-303.000.
Shiokari, Takashi: *See*—
Ueda, Seigo; Hashi, Kunio; Shiokari, Takashi; and Kusai, Akira, B1 044,091, Cl. 34-303.000.
Ueda, Seigo; Hashi, Kunio; Shiokari, Takashi; and Kusai, Akira, to Sankyo Company, Limited. Method of preparing a freeze-dried formulation of a drug. B1 044,091, Cl. 34-303.000.

LIST OF DESIGN PATENTEES

A. Stephan U. Soehne GmbH & Co.: *See*—
Otto, Freidrich, 388,447, Cl. D15-147.000.
Abbruzzese, Domenico: *See*—
Natuzzi, Pasquale; and Abbruzzese, Domenico, 388,259, Cl. D6-381.000.
Abrego, Emerson C. Game board. 388,471, Cl. D21-34.000.

Achterberg, Nicholas E.; and Williams, David A., to Black & Decker Inc. Decorative vent pattern for circular saw blades. 388,318, Cl. D8-499.000.
Acushnet Company: *See*—
    Cameron, Don T., 388,488, Cl. D21-221.000.
Adler, David T.: *See*—
    Bookwalter, John R.; and Adler, David T., 388,515, Cl. D24-138.000.
Albert, Barry R.: *See*—
    Rich, Christopher T.; Albert, Barry R.; and Pursell, Mark W., 388,292, Cl. D8-10.000.
Allegre, Jean-Paul, to Allegre Puericulture Hygience. Giraffe animal toy. 388,479, Cl. D21-164.000.
Allegre Puericulture Hygience: *See*—
    Allegre, Jean-Paul, 388,479, Cl. D21-164.000.
Allway Tools, Inc.: *See*—
    Gringer, Donald, 388,307, Cl. D8-107.000.
Ambasz, Emilio, to Center for Design Research & Development N.V. Chair. 388,258, Cl. D6-366.000.
Ambrosio, Neil; Forsythe, William; Hatton, Bruce; Keaton, Robert; and Kinder, Larry, to Progressive Games, Inc. Hood for collecting smoke from ashtrays. 388,531, Cl. D27-137.000.
Amequit, Linda H. Combined book and recipe card stand. 388,263, Cl. D8-419.000.
American Racing Equipment, Inc.: *See*—
    Chung, Suny, 388,390, Cl. D12-209.000.
Amway Corporation: *See*—
    Rick, Bradley G.; Guerra, Jonathan; Murakami, Seiji; and Touma, Kenichi, 388,510, Cl. D23-355.000.
Ancra International Corporation: *See*—
    Moradians, Edward, 388,393, Cl. D12-400.000.
Anderson, Norman David: *See*—
    Miller, Nikki Lynne; Reid, Kevin Alan; Glover, William Eugene; and Anderson, Norman David, 388,376, Cl. D12-147.000.
    Miller, Nikki Lynne; Reid, Kevin Alan; Glover, William Eugene; and Anderson, Norman David, 388,377, Cl. D12-147.000.
Antonopoulos-McIvor, Frances, to Aquarius II, Inc. Tool for use in removing nail polish from finger nails. 388,545, Cl. D28-57.000.
Apps, William Pat: *See*—
    Rehrig, James B.; and Apps, William Pat, 388,577, Cl. D34-5.000.
Aqua Cracker KB: *See*—
    Berggren, Martin, 388,303, Cl. D8-81.000.
Aquarius II, Inc.: *See*—
    Antonopoulos-McIvor, Frances, 388,545, Cl. D28-57.000.
Arbak, John Richard; and Cameron, Allan, to Bobrick Washroom Equipment, Inc. Sanitary napkin disposal. 388,578, Cl. D34-6.000.
Arnoux, Axel: *See*—
    Arnoux, Daniel; and Arnoux, Axel, 388,346, Cl. D10-79.000.
Arnoux, Daniel; and Arnoux, Axel, to Societe Chauvin Arnoux. Clamp-on current probe. 388,346, Cl. D10-79.000.
Aro-Sac, Inc.: *See*—
    Montaquila, Robert A., 388,357, Cl. D11-88.000.
Artime S.A.: *See*—
    Giardiello, Barbara, 388,354, Cl. D11-21.000.
Artime SA: *See*—
    Giardiello, Barbara, 388,335, Cl. D10-32.000.
    Giardiello, Barbara, 388,338, Cl. D10-39.000.
Ashcraft, Daniel; Griffith, Deanna; and Solland, Kurt, to SK Productions, L.L.C. Exerciser. 388,481, Cl. D21-196.000.
Austin, Barry G., to Tekonsha Engineering Company. Light fixture for recreational vehicles. 388,523, Cl. D26-28.000.
Axe, Royden; and Hamblin, Richard David, to Rolls-Royce Motor Cars Limited. Automobile. 388,365, Cl. D12-92.000.
Axelrod, Herbert R. Book display stand. 388,266, Cl. D6-468.000.
Bain, Charles E.: *See*—
    Markelz, Aimee J.; and Bain, Charles E., 388,465, Cl. D19-90.000.
Baker Hughes Incorporated: *See*—
    Glaum, J. Asher, 388,583, Cl. D34-29.000.
Battey, Joylene M.: *See*—
    Benner, Douglas D.; and Battey, Joylene M., 388,313, Cl. D8-354.000.
Baumann, René, to Desco Von Schulthess AG. Wristwatch. 388,334, Cl. D10-32.000.
Bayer, Fritz. Fabric. 388,255, Cl. D5-26.000.
Beaulieu, Jocelyn: *See*—
    Tedesco, Romeo; and Beaulieu, Jocelyn, 388,269, Cl. D6-501.000.
Behar, Yves: *See*—
    Toulis, Tadeo; Behar, Yves; and Lee, Peter, 388,407, Cl. D14-113.000.
Bencker, Jody J. Holder for a drink container. 388,283, Cl. D7-622.000.
Bene Cambra: *See*—
    Cambra, Bené M.; and Tarlow, Kenneth, 388,256, Cl. D6-358.000.
Benner, Douglas D.; and Battey, Joylene M., to Steelcase, Inc. Office partition support. 388,313, Cl. D8-354.000.
Benting, Gary M.; Mueller, Eric J.; and Weber, Cindy, to Wenger Corporation. Music stand. 388,262, Cl. D6-419.000.
Bentley, John A. Self-loading material spreader. 388,440, Cl. D15-13.000.
Berggren, Martin, to Aqua Cracker KB. Diving hammer. 388,303, Cl. D8-81.000.
Berkley, Inc.: *See*—
    Kliegl, Ronald, 388,323, Cl. D9-418.000.
Bjørnskov-Bartholdy, Lone: *See*—
    Nielsen, Jacob; Bjørnskov-Bartholdy, Lone; and Nielsen, Per Steen, 388,476, Cl. D21-148.000.
    Nielsen, Jacob; Bjørnskov-Bartholdy, Lone; and Nielsen, Per Steen, 388,477, Cl. D21-148.000.
    Nielsen, Jacob; Bjørnskov-Bartholdy, Lone; and Nielsen, Per Steen, 388,478, Cl. D21-148.000.
Black & Decker Inc.: *See*—
    Achterberg, Nicholas E.; and Williams, David A., 388,318, Cl. D8-499.000.
    Gildersleeve, Paul, 388,291, Cl. D8-8.000.
    Naft, Stuart, 388,575, Cl. D32-71.000.
Bobrick Washroom Equipment, Inc.: *See*—
    Arbak, John Richard; and Cameron, Allan, 388,578, Cl. D34-6.000.
Bongrain S.A.: *See*—
    Bonnard, Anna, 388,324, Cl. D9-424.000.
Bonnard, Anna, to Bongrain S.A. Packaging for food. 388,324, Cl. D9-424.000.
Bookwalter, John R.; and Adler, David T., to Flexbar Machine Corp. Combined laparoscopic tool holder and positioner. 388,515, Cl. D24-138.000.
Brandes, Michael J., to Servants, Inc., The. Corner protector. 388,317, Cl. D8-403.000.
Brant, Ronald G.: *See*—
    Tuggle, Lloyd H.; Houge, Michael S.; and Brant, Ronald G., 388,561, Cl. D32-15.000.
Braun Aktiengesellschaft: *See*—
    Ullmann, Roland, 388,542, Cl. D28-49.000.
Bray, Douglas, to Sea Gull Lighting Products, Inc. Snap-on prism for lighting fixture. 388,526, Cl. D26-134.000.
Breny, Michel Alfred Marie Oscar; and Villamizar, William Urbano, to Goodyear Tire & Rubber Company, The. Tire tread. 388,373, Cl. D12-147.000.
Bright, Stephen A.; and Erdmann, Linton H. Tennis ball container. 388,329, Cl. D9-503.000.
Brisben, John H.: *See*—
    Kinnunen, Kelly M.; and Brisben, John H., 388,404, Cl. D14-107.000.
Broderick, John W. Sun sleeve. 388,554, Cl. D29-120.000.
Brokelmann, Jaeger & Busse, GmbH & Co.: *See*—
    Henrici, Dieter, 388,395, Cl. D13-134.000.
Brown, Allison: *See*—
    Gurry, Edward G.; and Brown, Allison, 388,326, Cl. D9-434.000.
Brown & Williamson Tobacco Corporation: *See*—
    Corey, Robert G., 388,391, Cl. D12-323.000.
Brown, Stephanie Carol; Rohweder, Efimia Ellen; Kolowski, Michael Alois; and Miller, Frederick William, to Goodyear Tire & Rubber Company, The. Tire tread. 388,372, Cl. D12-146.000.
Brummer, Daryl J. Chimney top. 388,512, Cl. D23-374.000.
Brun, Serge: *See*—
    Gudefin, Jacques; and Brun, Serge, 388,576, Cl. D32-73.000.
Brunner, Merlin A.; and Draheim, Harvey J., to Simmons Juvenile Products Company, Inc. Combo unit. 388,264, Cl. D6-439.000.
Buchner, Daniel C.: *See*—
    Burchard, Thomas H.; Kim, Youngmihn; and Buchner, Daniel C., 388,500, Cl. D23-209.000.
Bulgari, Giovanni, to Gianni Bulgari, S.p.A. Wristwach. 388,336, Cl. D10-32.000.
Burchard, Thomas H.; Kim, Youngmihn; and Buchner, Daniel C., to Moen Incorporated. Water filter cartridge. 388,500, Cl. D23-209.000.
Burns, Thomas P. Fishing ruler. 388,345, Cl. D10-71.000.
Butt, Michael: *See*—
    Robinson, Victor T.; Butt, Michael; and Smith, C. Martin, 388,250, Cl. D3-245.000.
Buttenbender, Klaus, to Wagner Spray Tech Corporation. Heat gun with electronic control. 388,297, Cl. D8-29.100.
Calor S.A.: *See*—
    Gudefin, Jacques; and Brun, Serge, 388,576, Cl. D32-73.000.
Cambra, Bené M.; and Tarlow, Kenneth, to Bene Cambra. Motorcycle furniture. 388,256, Cl. D6-358.000.
Cameron, Allan: *See*—
    Arbak, John Richard; and Cameron, Allan, 388,578, Cl. D34-6.000.
Cameron, Don T., to Acushnet Company. Angled hosel adapted for a golf club. 388,488, Cl. D21-221.000.
Campbell, Richard W. Combined floor scraper and scrubber. 388,571, Cl. D32-42.000.
Candianides, Florence, to Tefal S.A. Kitchen utensil cover. 388,279, Cl. D7-391.000.
Canon Kabushiki Kaisha: *See*—
    Inukai, Yoshinori, 388,437, Cl. D14-223.000.
Cantley, George A.; and Prince, David L., to Teledyne Industries, Inc. Modular pump. 388,439, Cl. D15-7.000.
Captoys Inc.: *See*—
    Hoeting, Michael G.; and Mullaney, Sean T., 388,322, Cl. D9-415.000.
Carl de la Torre: *See*—
    Desborough, Brian; and Garrobo, Ray, 388,353, Cl. D10-113.000.
Carl Jimuki Kabushiki Kaisha: *See*—
    Mori, Chuzo, 388,446, Cl. D15-140.000.
Carlson, Edward W. Mouse pad. 388,414, Cl. D14-114.000.
Carris, Peter Y.: *See*—
    Oswaks, Jonathan; Durand, Jean-Pierre; and Carris, Peter Y., 388,505, Cl. D23-238.000.
Cartier Int'l B.V.: *See*—
    Perrin, Alain-Dominique; and Diltoer, Jacques, 388,332, Cl. D10-32.000.

Casiello, Nicholas. Labeling device for a coffee maker. 388,467, Cl. D20-43.000.
Casino Data Systems: *See*—
    Dickenson, Robert M.; Schnelder, Richard Jay; Cole, Joseph Wesley; and McKay, Linn A., 388,469, Cl. D21-13.000.
Casio Computer Co., Ltd.: *See*—
    Takahatá, Kenji; and Ohki, Yuji, 388,456, Cl. D18-2.000.
Center for Design Research & Development N.V.: *See*—
    Ambasz, Emilio, 388,258, Cl. D6-366.000.
Chahed, Khaled, to Parfums Jean Jacques Vivier. Combined perfume bottle and closure. 388,321, Cl. D9-322.000.
Chaney, Michael T.: *See*—
    Porter, Peggy O.; Chaney, Michael T.; and Kuritzky, Harold, 388,521, Cl. D25-124.000.
Charm Sciences, Inc.: *See*—
    Skiffington, Richard; and Zomer, Eliezer, 388,519, Cl. D24-223.000.
Chesebrough-Pond's USA Co., Division of Conopco, Inc.: *See*—
    Lamb, John David, 388,319, Cl. D9-300.000.
    Lamb, John David, 388,320, Cl. D9-300.000.
Choon Nang Electricl Appliance Mfty., Ltd.: *See*—
    Lui, Tat Nin, 388,563, Cl. D32-18.000.
Chung, Lee Hsin-Chih. Scroll saw. 388,441, Cl. D15-133.000.
Chung, Suny, to American Racing Equipment, Inc. Vehicle wheel front face. 388,390, Cl. D12-209.000.
Clivio, Franco, to Gardena Kress + Kastner GmbH. Spray nozzle. 388,501, Cl. D23-213.000.
Clouet, Jean-Marie, to Moulinex S.A. Electric steam iron. 388,574, Cl. D32-70.000.
Cole, Brian B., to Schering-Plough HealthCare Products. Men's insole. 388,242, Cl. D2-961.000.
Cole, Joseph Wesley: *See*—
    Dickenson, Robert M.; Schnelder, Richard Jay; Cole, Joseph Wesley; and McKay, Linn A., 388,469, Cl. D21-13.000.
Conewich Enterprises L.P.: *See*—
    Goldstein, Ward J., 388,236, Cl. D1-130.000.
Connector Set Limited Partnership: *See*—
    Glickman, Joel I., 388,475, Cl. D21-108.000.
Corey, Robert G., to Brown & Williamson Tobacco Corporation. Hot air balloon. 388,391, Cl. D12-323.000.
Cornell, Robert W.: *See*—
    Schulz, William J.; and Cornell, Robert W., 388,305, Cl. D8-98.000.
Cote, Sandra A., to Cote, Sandra A. Hand-held rechargeable makeup and hair color mixer. 388,536, Cl. D28-9.000.
Cruz, Anthony V., to Hamilton Beach/Proctor-Silex, Inc. Toaster. 388,276, Cl. D7-330.000.
Cruz, Mark: *See*—
    Tucker, Edward; Lueken, George; Gross, Luke; Cruz, Mark; and Melvan, Jack F., 388,325, Cl. D9-425.000.
Cummings, Gerald W.: *See*—
    Segan, Marc H.; Strauss, Gary; Cummings, Gerald W.; and Gonser, Vint, 388,435, Cl. D14-163.000.
    Segan, Marc H.; Strauss, Gary; and Cummings, Gerald W., 388,436, Cl. D14-205.000.
Daniels, S.p.A.: *See*—
    Doria, Alessandro, 388,562, Cl. D32-17.000.
Davis, Martha: *See*—
    Haner, Linda; and Davis, Martha, 388,331, Cl. D9-571.000.
Day Runner, Inc.: *See*—
    Jack, Douglas M., 388,459, Cl. D19-52.000.
Dayton Technologies, Inc.: *See*—
    Porter, Peggy O.; Chaney, Michael T.; and Kuritzky, Harold, 388,521, Cl. D25-124.000.
DeMuro, David Mark; Mitchell, John Francis; Wright, Laura Sheley; and Douros, Kenneth William, to Motorola, Inc. Display having icons for use in a telephone. 388,424, Cl. D14-114.900.
Denison, George; and Denison, Jeanette. Swivel blade spatula. 388,289, Cl. D7-692.000.
Denison, Jeanette: *See*—
    Denison, George; and Denison, Jeanette, 388,289, Cl. D7-692.000.
Desborough, Brian; and Garrobo, Ray, to Carl de la Torre. Reflective pavement marker. 388,353, Cl. D10-113.000.
Desco Von Schulthess AG: *See*—
    Baumann, René, 388,334, Cl. D10-32.000.
Devlin, Stuart Leslie. Surgical instrument. 388,516, Cl. D24-143.000.
Dick, Arlene M.: *See*—
    Malinosky, Michael; and Dick, Arlene M., 388,287, Cl. D7-670.000.
Dickenson, Robert M.; Schnelder, Richard Jay; Cole, Joseph Wesley; and McKay, Linn A., to Casino Data Systems. Electronic game housing. 388,469, Cl. D21-13.000.
Diltoer, Jacques: *See*—
    Perrin, Alain-Dominique; and Diltoer, Jacques, 388,332, Cl. D10-32.000.
Donahue, Mark E.; Duffield, Carolyn J.; Johnson, Vance M.; McElroy, James J.; and Nasr, Nagib, to Moen Incorporated. Faucet handle. 388,506, Cl. D23-252.000.
Doria, Alessandro, to Daniels, S.p.A. Steam cleaner. 388,562, Cl. D32-17.000.
Douros, Kenneth William: *See*—
    DeMuro, David Mark; Mitchell, John Francis; Wright, Laura Sheley; and Douros, Kenneth William, 388,424, Cl. D14-114.900.
Draheim, Harvey J.: *See*—
    Brunner, Merlin A.; and Draheim, Harvey J., 388,264, Cl. D6-439.000.
Dreyfus, Lowell J., to Underwater Diving, Inc. Face mask strap. 388,452, Cl. D16-339.000.
Drimmel, Nicholas E. Curved head beard trimming razor. 388,541, Cl. D28-46.000.
Duffield, Carolyn J.: *See*—
    Donahue, Mark E.; Duffield, Carolyn J.; Johnson, Vance M.; McElroy, James J.; and Nasr, Nagib, 388,506, Cl. D23-252.000.
Duracraft Corp.: *See*—
    Jane' , Rodney; Wang, Jui-Shang; Gresens, Stanley; and Holderfield, Gregory, 388,511, Cl. D23-358.000.
Durand, Jean-Pierre: *See*—
    Oswaks, Jonathan; Durand, Jean-Pierre; and Carris, Peter Y., 388,505, Cl. D23-238.000.
Easley, James Brian: *See*—
    Pasin, Antonio J.; and Easley, James Brian, 388,473, Cl. D21-71.000.
Edgecraft Co.: *See*—
    Friel, Daniel D., 388,304, Cl. D8-93.000.
Eguchi, Kyoko; and Yamamoto, Shinji, to Matsushita Electric Works, Ltd. Combined nose hair trimmer and top cap. 388,543, Cl. D28-53.000.
Ellis, Brian: *See*—
    Lowell, Ross; Seligman, Marvin; Pronputhari, Apirak; Yu, Chi; and Ellis, Brian, 388,525, Cl. D26-63.000.
Emhart Inc.: *See*—
    Oswaks, Jonathan; Durand, Jean-Pierre; and Carris, Peter Y., 388,505, Cl. D23-238.000.
English, Cort. Golf club. 388,484, Cl. D21-219.000.
Erdmann, Linton H.: *See*—
    Bright, Stephen A.; and Erdmann, Linton H., 388,329, Cl. D9-503.000.
European Touch Co., Inc.: *See*—
    Meyerovich, John, 388,544, Cl. D28-56.000.
Evans, Walter Reed; Pollard, Edward Ellett; Reichenbach, Raymond Herman; and Rice, Larry Joe, to Mas-Hamilton Group. Electronic combination lock housing. 388,308, Cl. D8-330.000.
Fabian, Wolfgang, to Soehnle-Waagen GmbH & Co. Scale for persons. 388,347, Cl. D10-92.000.
Facey, Lyle O. Mower deck washer. 388,567, Cl. D32-25.000.
Felkins, Calvin L. Stirrup adjuster. 388,557, Cl. D30-142.000.
Ferguson, Angela: *See*—
    Jones, Marla Vanessa; Ferguson, Angela; and Williams, Pat Grant, 388,537, Cl. D28-10.000.
Figueroa, Vivian. Orthopaedic cast cover. 388,517, Cl. D24-190.000.
Figur, Bernd: *See*—
    Stützer, Franz Alban; and Figur, Bernd, 388,252, Cl. D4-101.000.
First Brands Corporation: *See*—
    Savicki, Alan Francis, 388,560, Cl. D30-162.000.
    Tucker, Edward; Lueken, George; Gross, Luke; Cruz, Mark; and Melvan, Jack F., 388,325, Cl. D9-425.000.
Fiskars Inc.: *See*—
    Schulz, William J.; and Cornell, Robert W., 388,305, Cl. D8-98.000.
Flexbar Machine Corp.: *See*—
    Bookwalter, John R.; and Adler, David T., 388,515, Cl. D24-138.000.
Floyd, Greg; and Rausch, Kevin, to Rubbermaid Specialty Products Inc. Lid for ice chest. 388,282, Cl. D7-605.000.
Ford, Judit. Combined comb brush and pick for the hair. 388,539, Cl. D28-25.000.
Forsythe, William: *See*—
    Ambrosio, Neil; Forsythe, William; Hatton, Bruce; Keaton, Robert; and Kinder, Larry, 388,531, Cl. D27-137.000.
Foster, Arnold; and Foster, Pamela. Trailer tongue lock. 388,383, Cl. D12-162.000.
Foster, Pamela: *See*—
    Foster, Arnold; and Foster, Pamela, 388,383, Cl. D12-162.000.
Foto Fantasy, Inc.: *See*—
    Massarsky, Yefim, 388,451, Cl. D16-215.000.
Fountain, Chris. Rubber raft air mattress pump adaptor. 388,503, Cl. D23-231.000.
Fox, Lizzie L. Scraper spoon. 388,286, Cl. D7-653.000.
Fragoso, Genaro. Golf tee. 388,482, Cl. D21-208.000.
Freeman, Dan; and Freeman, Myles, to Protective Optics, Inc. Temple for sunglasses. 388,454, Cl. D16-335.000.
Freeman, Myles: *See*—
    Freeman, Dan; and Freeman, Myles, 388,454, Cl. D16-335.000.
Friedman, Linda, to J. R. Duffy Inc. Combined cord holder and cutter. 388,315, Cl. D8-360.100.
Friel, Daniel D., to Edgecraft Co. Versatile manual sharpener. 388,304, Cl. D8-93.000.
Frye, Elam C., Jr.; and Gore, Fred M., to Frye International Corporation. Holder and slicing guide. 388,288, Cl. D7-673.000.
Frye International Corporation: *See*—
    Frye, Elam C., Jr.; and Gore, Fred M., 388,288, Cl. D7-673.000.
Fu Hong Industries Limited: *See*—
    Lun, Wong Chung, 388,474, Cl. D21-87.000.
Fujiwara, Hiroshi: *See*—
    Takayasu, Tetsufumi; Kuwayama, Tatsuo; Kumakoshi, Takao; and Fujiwara, Hiroshi, 388,431, Cl. D14-138.000.
Gardena Kress + Kastner GmbH: *See*—
    Clivio, Franco, 388,501, Cl. D23-213.000.
Garment, Sharon: *See*—
    Mouyiaris, Nikos; and Garment, Sharon, 388,549, Cl. D28-82.000.
Garrobo, Ray: *See*—

Desborough, Brian; and Garrobo, Ray, 388,353, Cl. D10-113.000.
Genesis, Inc.: *See—*
Stringfellow, William J., 388,470, Cl. D21-13.000.
Gentry, Don, to Lunker Lure Products, Inc. Fishing lure rattle. 388,495, Cl. D22-126.000.
Gianni Bulgari, S.p.A.: *See—*
Bulgari, Giovanni, 388,336, Cl. D10-32.000.
Giardiello, Barbara, to Artime SA. Wristwatch. 388,335, Cl. D10-32.000.
Giardiello, Barbara, to Artime SA. Watch. 388,338, Cl. D10-39.000.
Giardiello, Barbara, to Artime S.A. Watch-bracelet. 388,354, Cl. D11-21.000.
Gildersleeve, Paul, to Black & Decker Inc. Hedge trimmer. 388,291, Cl. D8-6.000.
Glaun, J. Asher, to Baker Hughes Incorporated. Accelerator vane for a centrifuge. 388,583, Cl. D34-29.000.
Glickman, Joel I., to Connector Set Limited Partnership. Large multipurpose gear for construction toy set. 388,475, Cl. D21-108.000.
Global Upholstery Company: *See—*
Tedesco, Romeo; and Beaulieu, Jocelyn, 388,269, Cl. D6-501.000.
Glover, William Eugene: *See—*
Miller, Nikki Lynne; Reid, Kevin Alan; Glover, William Eugene; and Anderson, Norman David, 388,376, Cl. D12-147.000.
Miller, Nikki Lynne; Reid, Kevin Alan; Glover, William Eugene; and Anderson, Norman David, 388,377, Cl. D12-147.000.
Gogan, Donald M.; and Williams, Geoffrey T., to Harley-Davidson Motor Company. Motorcycle luggage carrier. 388,394, Cl. D12-407.000.
Gold, Peter. Improved utility knife scraping blade. 388,572, Cl. D32-46.000.
Goldstein, Ward J., to Conewich Enterprises L.P. Conical food article. 388,236, Cl. D1-130.000.
Gonser, Vint: *See—*
Segan, Marc H.; Strauss, Gary; Cummings, Gerald W.; and Gonser, Vint, 388,435, Cl. D14-163.000.
Goodyear Tire & Rubber Company, The: *See—*
Breny, Michel Alfred Marie Oscar; and Villamizar, William Urbano, 388,373, Cl. D12-147.000.
Brown, Stephanie Carol; Rohweder, Efimia Ellen; Kolowski, Michael Alois; and Miller, Frederick William, 388,372, Cl. D12-146.000.
Harden, Richard Winfield, Jr., 388,369, Cl. D12-146.000.
Harpes, Pierre; and Heinen, Richard, 388,375, Cl. D12-147.000.
Harpes, Pierre; and Graas, Maurice, 388,379, Cl. D12-147.000.
Harpes, Pierre; and Heinen, Richard, 388,380, Cl. D12-147.000.
Heinen, Richard; and Graas, Maurice, 388,381, Cl. D12-147.000.
Miller, Nikki Lynne; Reid, Kevin Alan; Glover, William Eugene; and Anderson, Norman David, 388,376, Cl. D12-147.000.
Miller, Nikki Lynne; Reid, Kevin Alan; Glover, William Eugene; and Anderson, Norman David, 388,377, Cl. D12-147.000.
Ratliff, Billy Joe, Jr., 388,378, Cl. D12-147.000.
Young, Austin Gale; and Schuster, Daniel Edward, 388,370, Cl. D12-146.000.
Gore, Fred M.: *See—*
Frye, Elam C., Jr.; and Gore, Fred M., 388,288, Cl. D7-673.000.
Graas, Maurice: *See—*
Harpes, Pierre; and Graas, Maurice, 388,379, Cl. D12-147.000.
Heinen, Richard; and Graas, Maurice, 388,381, Cl. D12-147.000.
Greene, Tom: *See—*
Mahaffey, Steve; and Greene, Tom, 388,483, Cl. D21-214.000.
Greenleaf, Inc.: *See—*
Pietrantoni, Italo, 388,522, Cl. D26-9.000.
Gremillion, Gloria. Educational toy doll. 388,460, Cl. D19-59.000.
Gresens, Stanley: *See—*
Jane' , Rodney; Wang, Jui-Shang; Gresens, Stanley; and Holderfield, Gregory, 388,511, Cl. D23-358.000.
Griffith, Deanna: *See—*
Ashcraft, Daniel; Griffith, Deanna; and Solland, Kurt, 388,481, Cl. D21-196.000.
Gringer, Donald, to Allway Tools, Inc. Tool handle. 388,307, Cl. D8-107.000.
Grosfillex, Raymond, to Grosfillex Sarl. Recliner lounge chair. 388,257, Cl. D6-361.000.
Grosfillex Sarl: *See—*
Grosfillex, Raymond, 388,257, Cl. D6-361.000.
Gross, Luke: *See—*
Tucker, Edward; Luecken, George; Gross, Luke; Cruz, Mark; and Melvan, Jack F., 388,325, Cl. D9-425.000.
Gudefin, Jacques; and Brun, Serge, to Calor S.A. Combined iron and steam generator. 388,576, Cl. D32-73.000.
Guerra, Jonathan: *See—*
Rick, Bradley G.; Guerra, Jonathan; Murakami, Seiji; and Touma, Kenichi, 388,510, Cl. D23-355.000.
Gurries, Albert G., II, to Haws Company. Emergency wash basin. 388,507, Cl. D23-284.000.
Gurry, Edward G.; and Brown, Allison. Hand-held multiple bag carrier for shopping bags having handles. 388,326, Cl. D9-434.000.
H-I-S Designers Inc.: *See—*
Protz, Philip R., Sr., 388,385, Cl. D12-167.000.
Hacker, Wesley. Vibrating darby. 388,299, Cl. D8-45.000.
Hafeman, John H.: *See—*
Reiger, Craig M., 388,496, Cl. D22-126.000.
Hafeman, Thomas A.: *See—*
Reiger, Craig M., 388,496, Cl. D22-126.000.
Hahn, Ron. Table leg. 388,268, Cl. D6-495.000.
Hamano, Masataka; and Kato, Katsumi, to Star Micronics Co., Ltd. Monitor camera. 388,450, Cl. D16-203.000.
Hamblin, Richard David: *See—*
Axe, Royden; and Hamblin, Richard David, 388,365, Cl. D12-92.000.
Hamilton Beach/Proctor-Silex, Inc.: *See—*
Cruz, Anthony V., 388,276, Cl. D7-330.000.
Hamilton, James D.; Mimlitch, Kenneth Harold; Muetterties, William Thomas; and Reichenbach, Raymond Herman, to Mas-Hamilton Group. Electronic combination lock housing. 388,309, Cl. D8-330.000.
Hamilton, Joseph Ellis. Rod attachable safety covering for fishing hook. 388,498, Cl. D22-144.000.
Haner, Linda; and Davis, Martha, to Warner-Lambert Company. Bottle. 388,331, Cl. D9-571.000.
Harden, Richard Winfield, Jr., to Goodyear Tire & Rubber Company, The. Tire tread. 388,369, Cl. D12-146.000.
Harley-Davidson Motor Company: *See—*
Gogan, Donald M.; and Williams, Geoffrey T., 388,394, Cl. D12-407.000.
Harmon, William D. Rod for use with a feed reservoir. 388,556, Cl. D30-121.000.
Harper-Wyman Company: *See—*
Kessler, Daniel R., 388,280, Cl. D7-416.000.
Harpes, Pierre; and Heinen, Richard, to Goodyear Tire & Rubber Company, The. Tire tread. 388,375, Cl. D12-147.000.
Harpes, Pierre; and Graas, Maurice, to Goodyear Tire & Rubber Company, The. Tire tread. 388,379, Cl. D12-147.000.
Harpes, Pierre; and Heinen, Richard, to Goodyear Tire & Rubber Company, The. Tire tread. 388,380, Cl. D12-147.000.
Harris, Daryl R.; and Jensen, Derek E., to Motorola, Inc. Telephone housing. 388,429, Cl. D14-138.000.
Harris, Daryl R.; and Luzbetak, Mark A., to Motorola, Inc. Face for portable telephone. 388,430, Cl. D14-138.000.
Harris, Virgil. Tiered oil bottle neck stabilizer. 388,328, Cl. D9-447.000.
Hatton, Bruce: *See—*
Ambrosio, Neil; Forsythe, William; Hatton, Bruce; Keaton, Robert; and Kinder, Larry, 388,531, Cl. D27-137.000.
Haver, Stephen T.; and Richwine, Karen A., to True Temper Hardware Company. Tool handle with hand grip. 388,293, Cl. D8-10.000.
Havlovitz, Paul M., to Republic Tool & Mfg. Corp. Utility cart. 388,580, Cl. D34-19.000.
Haws Company: *See—*
Gurries, Albert G., II, 388,507, Cl. D23-284.000.
Hayakawa, Naohiro: *See—*
Shibata, Yoshinori; and Hayakawa, Naohiro, 388,442, Cl. D15-133.000.
Hayashi, Bunya; Miyazoe, Shinji; and Ishikawa, Makoto, to SMC Corporation. Electromagnetic valve. 388,504, Cl. D23-233.000.
Haynes, Robin. Massage device. 388,518, Cl. D24-214.000.
He, Shan F.: *See—*
Li, Meng; and He, Shan F., 388,239, Cl. D2-878.000.
Healthline Products International: *See—*
Sapin, Courtney, 388,553, Cl. D29-119.000.
Heinen, Richard; and Graas, Maurice, to Goodyear Tire & Rubber Company, The. Tire tread. 388,381, Cl. D12-147.000.
Heinen, Richard: *See—*
Harpes, Pierre; and Heinen, Richard, 388,375, Cl. D12-147.000.
Harpes, Pierre; and Heinen, Richard, 388,380, Cl. D12-147.000.
Hellhake, Ferdinand F. Set of front headlamp bezel exterior surface. 388,530, Cl. D26-139.000.
Henredon Furniture Industries, Inc.: *See—*
Keller, H. Thomas, 388,265, Cl. D6-445.000.
Henrici, Dieter, to Brokelmann, Jaeger & Busse, GmbH & Co. Flourescent lamp holder. 388,395, Cl. D13-134.000.
Hercules Products, Inc.: *See—*
Hoffman, Leland J., 388,520, Cl. D25-64.000.
Hester, Lisa A. Dental floss dispenser. 388,548, Cl. D28-64.000.
Hewlett-Packard Company: *See—*
Toulis, Tadeo; Behar, Yves; and Lee, Peter, 388,407, Cl. D14-113.000.
Hill, David Wayne; and Murphy, Tim Kerry, to International Business Machines Corporation. Disk drive for a data processing system. 388,406, Cl. D14-109.000.
Hoeting, Michael G.; and Mullaney, Sean T., to Captoys Inc. Confectionary holder. 388,322, Cl. D9-415.000.
Hoffman, Larry M.: *See—*
Newton, James W.; and Hoffman, Larry M., 388,425, Cl. D14-114.900.
Hoffman, Leland J., to Hercules Products, Inc. Adjustable swimming pool ladder. 388,520, Cl. D25-64.000.
Holderfield, Gregory: *See—*
Jane' , Rodney; Wang, Jui-Shang; Gresens, Stanley; and Holderfield, Gregory, 388,511, Cl. D23-358.000.
HON Industries Inc.: *See—*
Schultz, Craig H.; and Schroeder, Douglas A., 388,270, Cl. D6-501.000.
Houge, Michael S.: *See—*
Tuggle, Lloyd H.; Houge, Michael S.; and Brant, Ronald G., 388,561, Cl. D32-15.000.
Howitt, Robert T., to M. Kamenstein, Inc. Expandable trivet. 388,278, Cl. D7-388.000.
Hsiao, Ming Jen. Ceramic electric heater in the form of a cup seat. 388,508, Cl. D23-328.000.
Hsiao, Ming Jen. Ceramic electric heater in the form of a cup seat. 388,509, Cl. D23-332.000.
Hughins, B. Wayne; Thrasher, D. C.; and Todd, C. Mark. Combined scoreboard and interchangeable indicia. 388,342, Cl. D10-46.100.

Humphries, Romilly. Combined fluid container and ice scraper. 388,570, Cl. D32-42.000.
Inai, Masahiko, to Makita Corporation. Concrete vibrator body. 388,302, Cl. D8-68.000.
Industrial Thermo Polymers Limited: *See—*
Sikorski, Marek, 388,489, Cl. D21-237.000.
Sikorski, Marek, 388,490, Cl. D21-237.000.
Sikorski, Marek, 388,491, Cl. D21-237.000.
Sikorski, Marek, 388,492, Cl. D21-237.000.
Industrie Natuzzi, Spa: *See—*
Natuzzi, Pasquale; and Abbruzzese, Domenico, 388,259, Cl. D6-381.000.
Natuzzi, Pasquale; and Scarati, Arcangelo, 388,260, Cl. D6-381.000.
Natuzzi, Pasquale; and Lucarelli, Raffaella, 388,261, Cl. D6-381.000.
Ingersoll-Rand Company: *See—*
Meloche, Joseph L., 388,396, Cl. D13-146.000.
Interlego AG: *See—*
Nielsen, Jacob; Bjerrskov-Bartholdy, Lone; and Nielsen, Per Steen, 388,476, Cl. D21-148.000.
Nielsen, Jacob; Bjerrskov-Bartholdy, Lone; and Nielsen, Per Steen, 388,477, Cl. D21-148.000.
Nielsen, Jacob; Bjerrskov-Bartholdy, Lone; and Nielsen, Per Steen, 388,478, Cl. D21-148.000.
Toft, Hanne, 388,480, Cl. D21-166.000.
International Business Machines Corporation: *See—*
Hill, David Wayne; and Murphy, Tim Kerry, 388,406, Cl. D14-109.000.
Inukai, Yoshinori, to Canon Kabushiki Kaisha. Earphone for portable terminal. 388,437, Cl. D14-223.000.
Invicta Plastics Limited: *See—*
Smith, Andrew Frederick; and Trowell, Gary Nigel, 388,461, Cl. D19-64.000.
Iomega Corporation: *See—*
Polson, Russell G.; and Murdock, Max J., 388,417, Cl. D14-114.400.
Polson, Russell G.; and Murdock, Max J., 388,418, Cl. D14-114.400.
Polson, Russell G.; and Murdock, Max J., 388,419, Cl. D14-114.400.
Polson, Russell G.; and Murdock, Max J., 388,420, Cl. D14-114.400.
Polson, Russell G.; and Murdock, Max J., 388,421, Cl. D14-114.700.
Polson, Russell G.; and Murdock, Max J., 388,422, Cl. D14-114.700.
Polson, Russell G.; and Murdock, Max J., 388,423, Cl. D14-114.700.
Irvin, William S., Jr. Pallet puller. 388,582, Cl. D34-28.000.
Iscar, Ltd.: *See—*
Satran, Amir, 388,444, Cl. D15-139.000.
Ishida, Koichi: *See—*
Uemura, Tomohiro; and Ishida, Koichi, 388,533, Cl. D28-4.000.
Uemura, Tomohiro; and Ishida, Koichi, 388,534, Cl. D28-4.000.
Ishikawa, Makoto: *See—*
Hayashi, Bunya; Miyazoe, Shinji; and Ishikawa, Makoto, 388,504, Cl. D23-233.000.
Israel, Gary P., to Wescon Products Company. Cleaning tool. 388,569, Cl. D32-41.000.
Itoya of America, Ltd.: *See—*
Takemura, Shun, 388,458, Cl. D19-36.000.
Iwabuchi, Masakazu, to Shimano, Inc. Spinning reel for fishing. 388,497, Cl. D22-141.000.
J. R. Duffy Inc.: *See—*
Friedman, Linda, 388,315, Cl. D8-360.100.
J. Wagner GmbH: *See—*
Jeltsch, Thomas, 388,300, Cl. D8-61.000.
Jack, Douglas M., to Day Runner, Inc. Multi-purpose information center. 388,459, Cl. D19-52.000.
Jane' , Rodney; Wang, Jui-Shang; Gresens, Stanley; and Holderfield, Gregory, to Duracraft Corp. Humidifier housing unit. 388,511, Cl. D23-358.000.
Jaspers-Fayer, Jan, to Minka Lighting Inc. Combined blade medallion and support arm for a ceiling fan. 388,513, Cl. D23-411.000.
Jeltsch, Thomas, to J. Wagner GmbH. Branch shear. 388,300, Cl. D8-61.000.
Jensen, Derek E.: *See—*
Harris, Daryl R.; and Jensen, Derek E., 388,429, Cl. D14-138.000.
Jeong, Thae Hong. Switch actuator. 388,398, Cl. D13-174.000.
Jerdee, Jeffrey S.; Pilosi, Paul A.; and Schoenert, Richard C., to Wagner Spray Tech Corporation. Heat gun. 388,298, Cl. D8-29.100.
Joergensen, Carsten, to PI-Design AG. Coffee maker. 388,275, Cl. D7-319.000.
Johansson, Glenn. Level. 388,344, Cl. D10-69.000.
Johnson, Gregory. Bicycle wheel. 388,389, Cl. D12-205.000.
Johnson, Joseph T. Protective mask. 388,514, Cl. D24-105.000.
Johnson, Vance M.: *See—*
Donahue, Mark E.; Duffield, Carolyn J.; Johnson, Vance M.; McElroy, James J.; and Nasr, Nagib, 388,506, Cl. D23-252.000.
Jones, Marla Vanessa; Ferguson, Angela; and Williams, Pat Grant, to Revlon Consumer Products Corporation. Hair styling device. 388,537, Cl. D28-10.000.
Jones, Stephen J. Flip reference mousepad. 388,416, Cl. D14-114.000.
Kabushiki Kaisha Toshiba: *See—*
Tanaka, Keita, 388,401, Cl. D14-106.000.
Kah, Carl L. C., III. Multiple orifice nozzle sprinkler. 388,502, Cl. D23-214.000.
Kao Kabushiki Kaisha (Kao Corporation): *See—*
Uemura, Tomohiro; and Ishida, Koichi, 388,533, Cl. D28-4.000.
Kato, Katsumi: *See—*
Hamano, Masataka; and Kato, Katsumi, 388,450, Cl. D16-203.000.
Keaton, Robert: *See—*
Ambrosio, Neil; Forsythe, William; Hatton, Bruce; Keaton, Robert; and Kinder, Larry, 388,531, Cl. D27-137.000.
Keller, H. Thomas, to Henredon Furniture Industries, Inc. Armoire. 388,265, Cl. D6-445.000.
Kessler, Daniel R., to Harper-Wyman Company. Battery powered spark igniter for a gas grill. 388,280, Cl. D7-416.000.
Kim, Kwang-Moo. Adjustable wrench. 388,294, Cl. D8-22.000.
Kim, Kwang-Moo. Adjustable wrench. 388,295, Cl. D8-22.000.
Kim, Soo Dong. Sound and light box for a toy. 388,472, Cl. D21-64.000.
Kim, Youngmihn: *See—*
Burchard, Thomas H.; Kim, Youngmihn; and Buchner, Daniel C., 388,500, Cl. D23-209.000.
Kinder, Larry: *See—*
Ambrosio, Neil; Forsythe, William; Hatton, Bruce; Keaton, Robert; and Kinder, Larry, 388,531, Cl. D27-137.000.
Kinnunen, Kelly M.; and Brisben, John H. Three-dimensional scanning device. 388,404, Cl. D14-107.000.
Kip, Albert Johannes, to U.S. Philips Corporation. Hot air comb. 388,538, Cl. D28-18.000.
Kliegl, Ronald, to Berkley, Inc. Combined package and mold for fishing bait. 388,323, Cl. D9-418.000.
Koa Kabushiki Kaisha (Kao Corporation): *See—*
Uemura, Tomohiro; and Ishida, Koichi, 388,534, Cl. D28-4.000.
Kobayashi, Yutaka: *See—*
Yamauchi, Takanobu; Kobayashi, Yutaka; and Montgomery, Steven M., 388,343, Cl. D10-57.000.
Koehler & Dramm, Inc.: *See—*
Krieger, Susan L., 388,361, Cl. D11-131.000.
Kokusai Electric Co., Ltd.: *See—*
Takayasu, Tetsufumi; Kuwayama, Tatsuo; Kumakoshi, Takao; and Fujiwara, Hiroshi, 388,431, Cl. D14-138.000.
Kolowski, Michael Alois: *See—*
Brown, Stephanie Carol; Rohweder, Efimia Ellen; Kolowski, Michael Alois; and Miller, Frederick William, 388,372, Cl. D12-146.000.
Kondo, Takayoshi, to Makita Corporation. Miter saw. 388,443, Cl. D15-133.000.
Kopin Corporation: *See—*
Pombo, Stephen A., 388,426, Cl. D14-124.000.
Kraus, Ulrich, to VDO Adolf Schindling AG. Speedometer-tachograph. 388,348, Cl. D10-98.000.
Krieger, Susan L., to Koehler & Dramm, Inc. Floral arrangement craft kit. 388,361, Cl. D11-131.000.
Kumakoshi, Takao: *See—*
Takayasu, Tetsufumi; Kuwayama, Tatsuo; Kumakoshi, Takao; and Fujiwara, Hiroshi, 388,431, Cl. D14-138.000.
Kumho & Co., Inc.: *See—*
Lim, Nack-Hyun; and Park, Dong-Ju, 388,374, Cl. D12-147.000.
Kuritzky, Harold: *See—*
Porter, Peggy O.; Chaney, Michael T.; and Kuritzky, Harold, 388,521, Cl. D25-124.000.
Kurokawa, Seiji: *See—*
Ohi, Hiroshi; and Kurokawa, Seiji, 388,449, Cl. D16-202.000.
Kuwayama, Tatsuo: *See—*
Takayasu, Tetsufumi; Kuwayama, Tatsuo; Kumakoshi, Takao; and Fujiwara, Hiroshi, 388,431, Cl. D14-138.000.
LaBorde, Jeff M.; and LaBorde, Margarita J. Combined necktie and scarf slide. 388,238, Cl. D2-609.000.
LaBorde, Margarita J.: *See—*
LaBorde, Jeff M.; and LaBorde, Margarita J., 388,238, Cl. D2-609.000.
Lamb, John David, to Chesebrough-Pond's USA Co., Division of Conopco, Inc. Container. 388,319, Cl. D9-300.000.
Lamb, John David, to Chesebrough-Pond's USA Co., Division of Conopco, Inc. Container with cap. 388,320, Cl. D9-300.000.
Larizza, Michael. Remote doorbell actuator unit for automobiles. 388,397, Cl. D13-168.000.
Larson, Kenneth W.: *See—*
Widmayer, Robert B.; and Larson, Kenneth W., 388,399, Cl. D13-179.000.
L'Article Chaussant Europeen: *See—*
Merceron, Jean-Paul, 388,241, Cl. D2-959.000.
Lee, Peter: *See—*
Toulis, Tadeo; Behar, Yves; and Lee, Peter, 388,407, Cl. D14-113.000.
Leonard, Brian; and McEntee, Kathryn King, to Rubbermaid Incorporated. Squeegee. 388,568, Cl. D32-41.000.
Lepack, Robert, to Northern Telecom Limited. Telephone base and stand. 388,433, Cl. D14-149.000.
Lepack, Robert, to Northern Telecom Limited. Telephone base and stand. 388,434, Cl. D14-149.000.
Lewis, Wayne A. Outdoor cat shelter. 388,555, Cl. D30-108.000.
LG Electronics Inc.: *See—*
Oh, Doo Won, 388,427, Cl. D14-135.000.
Li, Meng; and He, Shan F. Hood. 388,239, Cl. D2-878.000.
Libman Company, The: *See—*
Robinson, Victor T.; Butt, Michael; and Smith, C. Martin, 388,250, Cl. D3-245.000.
Lim, Nack-Hyun; and Park, Dong-Ju, to Kumho & Co., Inc. Pneumatic tire for vehicles. 388,374, Cl. D12-147.000.
Lin, Art, to Silitek Corporation. Scanner. 388,405, Cl. D14-107.000.
Lin, Jey-Ching, to Mao Lin Enterprises Co., Ltd. Sunglasses. 388,453, Cl. D16-315.000.

Lindahl, Richard; and Waldner, Thomas William, to Telefonaktiebolaget LM Ericsson. Mobile telephone. 388,428, Cl. D14-138.000.
Lindaman, Glenn. Tube sock with fastener. 388,245, Cl. D2-993.000.
Ling, Chong-Kuan. Retractable wire combination lock with alarming device. 388,310, Cl. D8-332.000.
Lisco, Inc.: *See—*
  Mahaffey, Steve; and Greene, Tom, 388,483, Cl. D21-214.000.
  Mahaffey, Steve, 388,486, Cl. D21-220.000.
  Sheets, Jeffrey D., 388,487, Cl. D21-219.000.
Liu, Chang Hsiung. Inflatable frame structure. 388,494, Cl. D21-254.000.
Lockheed Martin Corporation: *See—*
  McGinnis, John E.; and Wright, Bruce R., 388,392, Cl. D12-333.000.
Long Hall Technologies, L.L.C.: *See—*
  Segan, Marc H.; Strauss, Gary; Cummings, Gerald W.; and Gonser, Vint, 388,435, Cl. D14-163.000.
  Segan, Marc H.; Strauss, Gary; and Cummings, Gerald W., 388,436, Cl. D14-205.000.
Lonnstedt, Bo Gunnar. Magnifier lens. 388,448, Cl. D16-135.000.
Lowel-Light Manufacturing, Inc.: *See—*
  Lowell, Ross; Seligman, Marvin; Pronputhsri, Apiruk; Yu, Chi; and Ellis, Brian, 388,525, Cl. D26-63.000.
Lowell, Ross; Seligman, Marvin; Pronputhsri, Apiruk; Yu, Chi; and Ellis, Brian, to Lowel-Light Manufacturing, Inc. Light. 388,525, Cl. D26-63.000.
Lu, Tung Feng. Safety helmet. 388,551, Cl. D29-101.000.
Lucarelli, Raffaella: *See—*
  Natuzzi, Pasquale; and Lucarelli, Raffaella, 388,261, Cl. D6-381.000.
Lucas, James E., II; and Lucas, Regina L. Jewelry clasp extender. 388,356, Cl. D11-86.000.
Lucas, Regina L.: *See—*
  Lucas, James E., II; and Lucas, Regina L., 388,356, Cl. D11-86.000.
Lucas, Robert J., to Nike, Inc. Side element of a shoe upper. 388,499, Cl. D2-972.000.
Lueken, George: *See—*
  Tucker, Edward; Lueken, George; Gross, Luke; Cruz, Mark; and Melvan, Jack F., 388,325, Cl. D9-425.000.
Lui, Tat Nin, to Choon Nang Electricl Appliance Mfty, Ltd. Vacuum cleaner. 388,563, Cl. D32-18.000.
Lun, Wong Chung, to Fu Hong Industries Limited. Toy helicopter. 388,474, Cl. D21-87.000.
Lunker Lure Products, Inc.: *See—*
  Gentry, Don, 388,495, Cl. D22-126.000.
Lupo, Vincent A., to V.A. Wolf Inc. Climbing boot harness. 388,243, Cl. D2-963.000.
Lussi, Craig. Liquid removal apparatus. 388,564, Cl. D32-21.000.
Luzbetak, Mark A.: *See—*
  Harris, Daryl R.; and Luzbetak, Mark A., 388,430, Cl. D14-138.000.
Lytel, Ronald L., to Thomson Consumer Electronics. Cordless telephone and base unit. 388,432, Cl. D14-149.000.
M. Kamenstein, Inc.: *See—*
  Howitt, Robert T., 388,278, Cl. D7-388.000.
Madison, Theodore. Decorative fender molding. 388,388, Cl. D12-190.000.
Mahaffey, Steve; and Greene, Tom, to Lisco, Inc. Golf club driver head. 388,483, Cl. D21-214.000.
Mahaffey, Steve, to Lisco, Inc. Iron-type golf club head. 388,486, Cl. D21-220.000.
Makita Corporation: *See—*
  Inai, Masahiko, 388,302, Cl. D8-68.000.
  Kondo, Takayoshi, 388,443, Cl. D15-133.000.
  Shibata, Yoshinori; and Hayakawa, Naohiro, 388,442, Cl. D15-133.000.
Malinosky, Michael; and Dick, Arlene M. Push-up butter/margarine stick dispenser. 388,287, Cl. D7-670.000.
Mao Lin Enterprises Co., Ltd.: *See—*
  Lin, Jey-Ching, 388,453, Cl. D16-315.000.
Markelz, Aimee J.; and Bain, Charles E., to Sterling Plastics Co. Desktop vertical file assembly. 388,465, Cl. D19-90.000.
Martz, Raymond L. Hat. 388,240, Cl. D2-884.000.
Mas-Hamilton Group: *See—*
  Evans, Walter Reed; Pollard, Edward Ellett; Reichenbach, Raymond Herman; and Rice, Larry Joe, 388,308, Cl. D8-330.000.
  Hamilton, James D.; Mimlitch, Kenneth Harold; Muetterties, William Thomas; and Reichenbach, Raymond Herman, 388,309, Cl. D8-330.000.
Massarsky, Yefim, to Foto Fantasy, Inc. Self photography booth. 388,451, Cl. D16-215.000.
Matsushita Electric Industrial Co., Ltd.: *See—*
  Takemasa, Hirofumi; and Usui, Shigeo, 388,408, Cl. D14-113.000.
  Takemasa, Hirofumi; and Usui, Shigeo, 388,409, Cl. D14-113.000.
  Takemasa, Hirofumi, 388,413, Cl. D14-113.000.
  Tochishita, Masaru, 388,403, Cl. D14-106.000.
Matsushita Electric Works, Ltd.: *See—*
  Eguchi, Kyoko; and Yamamoto, Shinji, 388,543, Cl. D28-53.000.
Mauldin, William D., Jr., to Planet Pet, Inc. Animal toy. 388,559, Cl. D30-160.000.
M+ C Schiffer GmbH: *See—*
  Schiffer, Carl, 388,254, Cl. D4-107.000.
McDonough, William P.; and Ross, Harold D., to Penn Engineering & Manufacturing Corp. Panel fastener. 388,316, Cl. D8-387.000.
McElroy, James J.: *See—*
  Donahue, Mark E.; Duffield, Carolyn J.; Johnson, Vance M.; McElroy, James J.; and Nasr, Nagib, 388,506, Cl. D23-252.000.
McEntee, Kathryn King, to Rubbermaid Cleaning Products Inc. Bath brush handle. 388,546, Cl. D28-63.000.
McEntee, Kathryn King: *See—*
  Leonard, Brian; and McEntee, Kathryn King, 388,568, Cl. D32-41.000.
McGinnis, John E.; and Wright, Bruce R., to Lockheed Martin Corporation. Unmanned aircraft. 388,392, Cl. D12-333.000.
McKay, Linn A.: *See—*
  Dickenson, Robert M.; Schneider, Richard Jay; Cole, Joseph Wesley; and McKay, Linn A., 388,469, Cl. D21-13.000.
McLauchlan, Barbara Anne. Baby carrier. 388,247, Cl. D3-213.000.
Melard Manufacturing Corp.: *See—*
  Moore, Glenn David, 388,271, Cl. D6-546.000.
  Moore, Glenn David, 388,272, Cl. D6-549.000.
Meloche, Joseph L., to Ingersoll-Rand Company. Modular sensor input block. 388,396, Cl. D13-146.000.
Melvan, Jack F.: *See—*
  Tucker, Edward; Lueken, George; Gross, Luke; Cruz, Mark; and Melvan, Jack F., 388,325, Cl. D9-425.000.
Merceron, Jean-Paul, to L'Article Chaussant Europeen. Shoe sole. 388,241, Cl. D2-959.000.
Meyerovich, John, to European Touch Co., Inc. Artificial fingernail. 388,544, Cl. D28-56.000.
Miller, Frederick William: *See—*
  Brown, Stephanie Carol; Rohweder, Efimia Ellen; Kolowski, Michael Alois; and Miller, Frederick William, 388,372, Cl. D12-146.000.
Miller, Nikki Lynne; Reid, Kevin Alan; Glover, William Eugene; and Anderson, Norman David, to Goodyear Tire & Rubber Company, The. Tire tread. 388,376, Cl. D12-147.000.
Miller, Nikki Lynne; Reid, Kevin Alan; Glover, William Eugene; and Anderson, Norman David, to Goodyear Tire & Rubber Company, The. Tire tread. 388,377, Cl. D12-147.000.
Miller, Richard E. Dog leash. 388,558, Cl. D30-153.000.
Mimlitch, Kenneth Harold: *See—*
  Hamilton, James D.; Mimlitch, Kenneth Harold; Muetterties, William Thomas; and Reichenbach, Raymond Herman, 388,309, Cl. D8-330.000.
Minka Lighting Inc.: *See—*
  Jaspers-Fayer, Jan, 388,513, Cl. D23-411.000.
Mirvis, Adelina C.: *See—*
  Mirvis, Reid H.; and Mirvis, Adelina C., 388,237, Cl. D2-608.000.
Mirvis, Reid H.; and Mirvis, Adelina C. Necktie. 388,237, Cl. D2-608.000.
Mitchell, John Francis: *See—*
  DeMuro, David Mark; Mitchell, John Francis; Wright, Laura Sheley; and Douros, Kenneth William, 388,424, Cl. D14-114.900.
Miyazaki, Tatsuya, to Sumitomo Rubber Industries, Ltd. Automobile tire. 388,371, Cl. D12-146.000.
Miyazoe, Shinji: *See—*
  Hayashi, Bunya; Miyazoe, Shinji; and Ishikawa, Makoto, 388,504, Cl. D23-233.000.
Moen Incorporated: *See—*
  Burchard, Thomas H.; Kim, Youngmihn; and Buchner, Daniel C., 388,500, Cl. D23-209.000.
  Donahue, Mark E.; Duffield, Carolyn J.; Johnson, Vance M.; McElroy, James J.; and Nasr, Nagib, 388,506, Cl. D23-252.000.
Montaquila, Robert A., to Aro-Sac, Inc. Earring clip. 388,357, Cl. D11-88.000.
Montgomery, Steven M.: *See—*
  Yamauchi, Takanobu; Kobayashi, Yutaka; and Montgomery, Steven M., 388,343, Cl. D10-57.000.
Moore, Glenn David, to Melard Manufacturing Corp. Towel ring. 388,271, Cl. D6-546.000.
Moore, Glenn David, to Melard Manufacturing Corporation. Towel bar. 388,272, Cl. D6-549.000.
Moradians, Edward, to Ancra International Corporation. Restraint device for cargo handling. 388,393, Cl. D12-400.000.
Morgan, Byron; and Ortega, John. Golf putter head. 388,485, Cl. D21-219.000.
Mori, Chuzo, to Carl Jimuki Kabushiki Kaisha. Punch-blade holder. 388,446, Cl. D15-140.000.
Motorola, Inc.: *See—*
  DeMuro, David Mark; Mitchell, John Francis; Wright, Laura Sheley; and Douros, Kenneth William, 388,424, Cl. D14-114.900.
  Harris, Daryl R.; and Jensen, Derek E., 388,429, Cl. D14-138.000.
  Harris, Daryl R.; and Luzbetak, Mark A., 388,430, Cl. D14-138.000.
  Tokiyama, Masaru; and Oross, Glen A., 388,438, Cl. D14-258.000.
  Widmayer, Robert B.; and Larson, Kenneth W., 388,399, Cl. D13-179.000.
Moulinex S.A.: *See—*
  Clouet, Jean-Marie, 388,574, Cl. D32-70.000.
Mouyiaris, Nikos; and Garment, Sharon. Cosmetic case. 388,549, Cl. D28-82.000.
Mueller, Eric J.: *See—*
  Benting, Gary M.; Mueller, Eric J.; and Weber, Cindy, 388,262, Cl. D6-419.000.
Muetterties, William Thomas: *See—*
  Hamilton, James D.; Mimlitch, Kenneth Harold; Muetterties, William Thomas; and Reichenbach, Raymond Herman, 388,309, Cl. D8-330.000.
Mullaney, Sean T.: *See—*
  Hoeting, Michael G.; and Mullaney, Sean T., 388,322, Cl. D9-415.000.
Murakami, Seiji: *See—*

  Rick, Bradley G.; Guerra, Jonathan; Murakami, Seiji; and Touma, Kenichi, 388,510, Cl. D23-355.000.
Murdock, Max J.: *See—*
  Polson, Russell G.; and Murdock, Max J., 388,417, Cl. D14-114.400.
  Polson, Russell G.; and Murdock, Max J., 388,418, Cl. D14-114.400.
  Polson, Russell G.; and Murdock, Max J., 388,419, Cl. D14-114.400.
  Polson, Russell G.; and Murdock, Max J., 388,420, Cl. D14-114.400.
  Polson, Russell G.; and Murdock, Max J., 388,421, Cl. D14-114.700.
  Polson, Russell G.; and Murdock, Max J., 388,422, Cl. D14-114.700.
  Polson, Russell G.; and Murdock, Max J., 388,423, Cl. D14-114.700.
Murphy, Tim Kerry: *See—*
  Hill, David Wayne; and Murphy, Tim Kerry, 388,406, Cl. D14-109.000.
Myles, Ian James; and Schiefer, Sonja, to Shinho Electronics & Communications Co., Ltd. Electronic display device. 388,410, Cl. D14-113.000.
Myles, Ian James, to Shinho Electronics & Communications Co., Ltd. Electronic display device. 388,411, Cl. D14-113.000.
Myles, Ian James; and Schiefer, Sonja, to Shinho Electronics & Communications Co., Ltd. Electronic display device. 388,412, Cl. D14-113.000.
Naft, Stuart, to Black & Decker Inc. Soleplate for a steam iron. 388,575, Cl. D32-71.000.
Najbart, Barbara. Combined holder for an ink pen and tally card. 388,464, Cl. D19-78.000.
Nasr, Nagib: *See—*
  Donahue, Mark E.; Duffield, Carolyn J.; Johnson, Vance M.; McElroy, James J.; and Nasr, Nagib, 388,506, Cl. D23-252.000.
Natuzzi, Pasquale; and Abbruzzese, Domenico, to Industrie Natuzzi, Spa. Seat. 388,259, Cl. D6-381.000.
Natuzzi, Pasquale; and Scarati, Arcangelo, to Industrie Natuzzi, Spa. Seat. 388,260, Cl. D6-381.000.
Natuzzi, Pasquale; and Lucarelli, Raffaella, to Industrie Natuzzi, Spa. Seat. 388,261, Cl. D6-381.000.
Negron, Jose. Holster for a pager. 388,249, Cl. D3-218.000.
Nelson, Wayne: *See—*
  Repp, Timothy C.; Nelson, Wayne; Stanley, Lawrence G.; and Winterble, Charles, 388,351, Cl. D10-106.000.
  Repp, Timothy C.; Nelson, Wayne; Stanley, Lawrence G.; and Winterble, Charles, 388,352, Cl. D10-106.000.
Neshat, Amir M., to Scott Fetzer Company, The. Electric fillet knife handle. 388,285, Cl. D7-646.000.
Newkirk, John Robert; and Winter, Paul Henry, to Zenith Products Corporation. Shelf unit. 388,267, Cl. D6-479.000.
Newton, James W.; and Hoffman, Larry M., to Sun Microsystems, Inc. Set of icons for a computer screen. 388,425, Cl. D14-114.900.
Nielsen, Jacob; Bjørnskov-Bartholdy, Lone; and Nielsen, Per Steen, to Interlego AG. Toy animal. 388,476, Cl. D21-148.000.
Nielsen, Jacob; Bjørnskov-Bartholdy, Lone; and Nielsen, Per Steen, to Interlego AG. Toy animal. 388,477, Cl. D21-148.000.
Nielsen, Jacob; Bjørnskov-Bartholdy, Lone; and Nielsen, Per Steen, to Interlego AG. Toy animal. 388,478, Cl. D21-148.000.
Nielsen, Per Steen: *See—*
  Nielsen, Jacob; Bjørnskov-Bartholdy, Lone; and Nielsen, Per Steen, 388,476, Cl. D21-148.000.
  Nielsen, Jacob; Bjørnskov-Bartholdy, Lone; and Nielsen, Per Steen, 388,477, Cl. D21-148.000.
  Nielsen, Jacob; Bjørnskov-Bartholdy, Lone; and Nielsen, Per Steen, 388,478, Cl. D21-148.000.
Nike, Inc.: *See—*
  Lucas, Robert J., 388,499, Cl. D2-972.000.
  Smith, Wilson W., III, 388,355, Cl. D2-960.000.
  Smith, Wilson W., 388,350, Cl. D2-953.000.
  Smith, Wilson W., 388,402, Cl. D2-972.000.
  Tresser, Christian J., 388,314, Cl. D2-954.000.
  Vestuti, Ricardo, 388,364, Cl. D2-972.000.
Nishino, Toshiyuki, to Suzuki Kabushiki Kaisha. Motorcycle. 388,366, Cl. D12-110.000.
Northern Telecom Limited: *See—*
  Lepack, Robert, 388,433, Cl. D14-149.000.
  Lepack, Robert, 388,434, Cl. D14-149.000.
Oakley, Inc.: *See—*
  Rohrbach, Toby, 388,248, Cl. D3-217.000.
Oh, Doo Won, to LG Electronics Inc. Video cassette recorder. 388,427, Cl. D14-135.000.
Ohi, Hiroshi; and Kurokawa, Seiji, to Sharp Kabushiki Kaisha. Electronic still camera. 388,449, Cl. D16-202.000.
Ohki, Yuji: *See—*
  Takahata, Kenji; and Ohki, Yuji, 388,456, Cl. D18-2.000.
Omron Corporation: *See—*
  Yamauchi, Takanobu; Kobayashi, Yutaka; and Montgomery, Steven M., 388,343, Cl. D10-57.000.
Orfevrerie Christofle: *See—*
  Sitoleux, Jacques, 388,284, Cl. D7-645.000.
Oross, Glen A.: *See—*
  Tokiyama, Masaru; and Oross, Glen A., 388,438, Cl. D14-258.000.
Ortega, John: *See—*
  Morgan, Byron; and Ortega, John, 388,485, Cl. D21-219.000.
Oswaks, Jonathan; Durand, Jean-Pierre; and Carris, Peter Y., to Emhart Inc. Faucet. 388,505, Cl. D23-238.000.
Otto, Freidrich, to A. Stephan U. Soehne GmbH & Co. Universal mixer. 388,447, Cl. D15-147.000.
Panduit Corp.: *See—*
  Scherer, Craig; and Thuma, Michael, 388,311, Cl. D8-353.000.
Parfums Jean Jacques Vivier: *See—*
  Chahed, Khaled, 388,321, Cl. D9-322.000.
Park, Dong-Ju: *See—*
  Lim, Nack-Hyun; and Park, Dong-Ju, 388,374, Cl. D12-147.000.
Parker, William. Lamp shade with interior solar cells. 388,529, Cl. D26-135.000.
Pasin, Antonio J.; and Easley, James Brian, to Radio Flyer, Inc. Children's canopy wagon. 388,473, Cl. D21-71.000.
Patterson, Matt T., to Walkabout, Inc. Portable keyboard carrier. 388,246, Cl. D3-204.000.
Penn Engineering & Manufacturing Corp.: *See—*
  McDonough, William P.; and Ross, Harold D., 388,316, Cl. D8-387.000.
Perez, Leoncio D. Golfer's guide. 388,341, Cl. D10-46.100.
Per-Lee, Myra S. Skin care applicator handle. 388,535, Cl. D28-7.000.
Perrin, Alain-Dominique; and Diltoer, Jacques, to Cartier Int'l B.V. Combined watch and bracelet. 388,332, Cl. D10-32.000.
PI-Design AG: *See—*
  Joergensen, Carsten, 388,275, Cl. D7-319.000.
Pietrantoni, Italo, to Greenleaf, Inc. Votive candle box. 388,522, Cl. D26-[illegible].000.
Pietrobon, Silvano, to W.S. S.p.A. Vacuum cleaner. 388,565, Cl. D32-23.000.
Pilosi, Paul A.: *See—*
  Jerdee, Jeffrey S.; Pilosi, Paul A.; and Schoenert, Richard C., 388,298, Cl. D8-29.100.
Planet Pet, Inc.: *See—*
  Mauldin, William D., Jr., 388,559, Cl. D30-160.000.
Polak, Antoinette M.: *See—*
  Polak, John C.; Polak, Antoinette M.; Polak, M. Darlene; and Polak, M. Antoinette, 388,367, Cl. D12-129.000.
  Polak, John C.; Polak, Antoinette M.; Polak, M. Darlene; and Polak, M. Antoinette, 388,368, Cl. D12-129.000.
Polak, John C.; Polak, Antoinette M.; Polak, M. Darlene; and Polak, M. Antoinette. Sport vehicle stroller. 388,367, Cl. D12-129.000.
Polak, John C.; Polak, Antoinette M.; Polak, M. Darlene; and Polak, M. Antoinette. Tandem stroller. 388,368, Cl. D12-129.000.
Polak, M. Antoinette: *See—*
  Polak, John C.; Polak, Antoinette M.; Polak, M. Darlene; and Polak, M. Antoinette, 388,367, Cl. D12-129.000.
  Polak, John C.; Polak, Antoinette M.; Polak, M. Darlene; and Polak, M. Antoinette, 388,368, Cl. D12-129.000.
Polak, M. Darlene: *See—*
  Polak, John C.; Polak, Antoinette M.; Polak, M. Darlene; and Polak, M. Antoinette, 388,367, Cl. D12-129.000.
  Polak, John C.; Polak, Antoinette M.; Polak, M. Darlene; and Polak, M. Antoinette, 388,368, Cl. D12-129.000.
Pollard, Edward Ellett: *See—*
  Evans, Walter Reed; Pollard, Edward Ellett; Reichenbach, Raymond Herman; and Rice, Larry Joe, 388,308, Cl. D8-330.000.
Polson, Russell G.; and Murdock, Max J., to Iomega Corporation. Computer screen with an icon. 388,417, Cl. D14-114.400.
Polson, Russell G.; and Murdock, Max J., to Iomega Corporation. Computer screen with an icon. 388,418, Cl. D14-114.400.
Polson, Russell G.; and Murdock, Max J., to Iomega Corporation. Computer screen with an icon. 388,419, Cl. D14-114.400.
Polson, Russell G.; and Murdock, Max J., to Iomega Corporation. Computer screen with an icon. 388,420, Cl. D14-114.400.
Polson, Russell G.; and Murdock, Max J., to Iomega Corporation. Icon for a computer screen. 388,421, Cl. D14-114.700.
Polson, Russell G.; and Murdock, Max J., to Iomega Corporation. Icon for a computer screen. 388,422, Cl. D14-114.700.
Polson, Russell G.; and Murdock, Max J., to Iomega Corporation. Icon for a computer screen. 388,423, Cl. D14-114.700.
Pombo, Stephen A., to Kopin Corporation. Head-mounted display device. 388,426, Cl. D14-124.000.
Porter, Peggy O.; Chaney, Michael T.; and Kuritzky, Harold, to Dayton Technologies, Inc. Window component extrusion. 388,521, Cl. D25-124.000.
Porter Precision Products Co.: *See—*
  Powlett, Michael J., 388,445, Cl. D15-140.000.
Powlett, Michael J., to Porter Precision Products Co. Punch retainer. 388,445, Cl. D15-140.000.
Precision Fabrication Technologies, Inc.: *See—*
  Rogers, Joseph W., 388,400, Cl. D13-199.000.
Pressman, Brad A. Table lamp. 388,527, Cl. D26-94.000.
Prince, David L.: *See—*
  Cantley, George A.; and Prince, David L., 388,439, Cl. D15-7.000.
Procter & Gamble Company, The: *See—*
  Zimmer, Gregory A., 388,330, Cl. D9-543.000.
Progressive Games, Inc.: *See—*
  Ambrosio, Neil; Forsythe, William; Hatton, Bruce; Keaton, Robert; and Kinder, Larry, 388,531, Cl. D27-137.000.
Pronputhsri, Apiruk: *See—*
  Lowell, Ross; Seligman, Marvin; Pronputhsri, Apiruk; Yu, Chi; and Ellis, Brian, 388,525, Cl. D26-63.000.
Propper, Ginger. Combined towel and tote bag. 388,273, Cl. D6-608.000.
Protective Optics, Inc.: *See—*
  Freeman, Dan; and Freeman, Myles, 388,454, Cl. D16-335.000.
Protz, Philip R., Sr., to H-I-S Designers Inc. Truck rear window protector. 388,385, Cl. D12-167.000.
Punch Products USA, Inc.: *See—*
  Trombley, Edgar F., 388,281, Cl. D7-515.000.

Pursel, Mark W.: *See—*
Rich, Christopher T.; Albert, Barry R.; and Pursel, Mark W., 388,292, Cl. D8-10.000.
Ra, Dojin. Toothbrush. 388,253, Cl. D4-104.000.
Radio Flyer, Inc.: *See—*
Pasin, Antonio J.; and Easley, James Brian, 388,473, Cl. D21-71.000.
Radosevich, Judith L. Combined aerating lid and cover unit for a standard wide mouth jar. 388,327, Cl. D9-436.000.
Ramar, Haim. Razor having a rotatable triangular head. 388,540, Cl. D28-45.000.
Ratliff, Billy Joe, Jr., to Goodyear Tire & Rubber Company, The. Tire tread. 388,378, Cl. D12-147.000.
Rausch, Kevin: *See—*
Floyd, Greg; and Rausch, Kevin, 388,282, Cl. D7-605.000.
Rehrig, James B.; and Apps, William Pat, to Rehrig Pacific Company. Roll out trash cart. 388,577, Cl. D34-5.000.
Rehrig Pacific Company: *See—*
Rehrig, James B.; and Apps, William Pat, 388,577, Cl. D34-5.000.
Reichenbach, Raymond Herman: *See—*
Evans, Walter Reed; Pollard, Edward Ellett; Reichenbach, Raymond Herman; and Rice, Larry Joe, 388,308, Cl. D8-330.000.
Hamilton, James D.; Mimlitch, Kenneth Harold; Muetterties, William Thomas; and Reichenbach, Raymond Herman, 388,309, Cl. D8-330.000.
Reid, Kevin Alan: *See—*
Miller, Nikki Lynne; Reid, Kevin Alan; Glover, William Eugene; and Anderson, Norman David, 388,376, Cl. D12-147.000.
Miller, Nikki Lynne; Reid, Kevin Alan; Glover, William Eugene; and Anderson, Norman David, 388,377, Cl. D12-147.000.
Reid, Ronald J.; and Spiteri, Ron J. Drain tray for a household appliance. 388,566, Cl. D32-25.000.
Reiger, Craig M., to Hafeman, Thomas A.; and Hafeman, John H. Floating jig. 388,496, Cl. D22-126.000.
Repp, Timothy C.; Nelson, Wayne; Stanley, Lawrence G.; and Winterble, Charles, to Simplex Time Recorder Company. Smoke detector. 388,351, Cl. D10-106.000.
Repp, Timothy C.; Nelson, Wayne; Stanley, Lawrence G.; and Winterble, Charles, to Simplex Time Recorder Company. Smoke detector. 388,352, Cl. D10-106.000.
Republic Tool & Mfg. Corp.: *See—*
Havlovitz, Paul M., 388,580, Cl. D34-19.000.
Revlon Consumer Products Corporation: *See—*
Jones, Marla Vanessa; Ferguson, Angela; and Williams, Pat Grant, 388,537, Cl. D28-10.000.
Riccobene, Thomas S. Garden edger. 388,290, Cl. D8-1.000.
Rice, Larry Joe: *See—*
Evans, Walter Reed; Pollard, Edward Ellett; Reichenbach, Raymond Herman; and Rice, Larry Joe, 388,308, Cl. D8-330.000.
Rich, Christopher T.; Albert, Barry R.; and Pursel, Mark W., to True Temper Hardware Company. Round point shovel with toothed blade. 388,292, Cl. D8-10.000.
Richwine, Karen A.: *See—*
Haver, Stephen T.; and Richwine, Karen A., 388,293, Cl. D8-10.000.
Rick, Bradley G.; Guerra, Jonathan; Murakami, Seiji; and Touma, Kenichi, to Amway Corporation. Air treatment unit with removable feet therefor. 388,510, Cl. D23-355.000.
Ridinger, Steve. Front face for a metronome. 388,340, Cl. D10-43.000.
Rife, Kenneth J. Placard holder. 388,468, Cl. D20-43.000.
Robinson, Victor T.; Butt, Michael; and Smith, C. Martin, to Libman Company, The. Zipper closed bag with zippered pockets. 388,250, Cl. D3-245.000.
Rogers, Joseph W., to Precision Fabrication Technologies, Inc. Cable management rack. 388,400, Cl. D13-199.000.
Rohrbach, Toby, to Oakley, Inc. Backpack. 388,248, Cl. D3-217.000.
Rohweder, Efimia Ellen: *See—*
Brown, Stephanie Carol; Rohweder, Efimia Ellen; Kolowski, Michael Alois; and Miller, Frederick William, 388,372, Cl. D12-146.000.
Rolls-Royce Motor Cars Limited: *See—*
Axe, Royden; and Hamblin, Richard David, 388,365, Cl. D12-92.000.
Ross, Harold D.: *See—*
McDonough, William P.; and Ross, Harold D., 388,316, Cl. D8-387.000.
Rostron, Dan. Grill cleaning tool. 388,573, Cl. D32-49.000.
Rowenta-Werke GmbH: *See—*
Stützer, Franz Alban; and Figur, Bernd, 388,252, Cl. D4-101.000.
Rubbermaid Cleaning Products Inc.: *See—*
McEntee, Kathryn King, 388,546, Cl. D28-63.000.
Rubbermaid Incorporated: *See—*
Leonard, Brian; and McEntee, Kathryn King, 388,568, Cl. D32-41.000.
Rubbermaid Specialty Products Inc.: *See—*
Floyd, Greg; and Rausch, Kevin, 388,282, Cl. D7-605.000.
Sanchez, Jess, Jr. Rear bumper for pickup trucks and other motor vehicles. 388,386, Cl. D12-169.000.
Sapin, Courtney, to Healthline Products International. Oven mitt. 388,553, Cl. D29-119.000.
Satran, Amir, to Iscar, Ltd. Metal cutting insert. 388,444, Cl. D15-139.000.
Savicki, Alan Francis, to First Brands Corporation. Litter box. 388,560, Cl. D30-162.000.
Scarati, Arcangelo: *See—*
Natuzzi, Pasquale; and Scarati, Arcangelo, 388,260, Cl. D6-381.000.
Scherer, Craig; and Thuma, Michael, to Panduit Corp. Faceplate. 388,311, Cl. D8-353.000.
Schering-Plough HealthCare Products: *See—*
Cole, Brian B., 388,242, Cl. D2-961.000.
Schiefer, Sonja: *See—*
Myles, Ian James; and Schiefer, Sonja, 388,410, Cl. D14-113.000.
Myles, Ian James; and Schiefer, Sonja, 388,412, Cl. D14-113.000.
Schiffer, Carl, to M+ C Schiffer GmbH. Child's toothbrush. 388,254, Cl. D4-107.000.
Schneider, Richard Jay: *See—*
Dickenson, Robert M.; Schneider, Richard Jay; Cole, Joseph Wesley; and McKay, Linn A., 388,469, Cl. D21-13.000.
Schoenert, Richard C.: *See—*
Jerdee, Jeffrey S.; Pilosi, Paul A.; and Schoenert, Richard C., 388,298, Cl. D8-29.100.
Schroeder, Douglas A.: *See—*
Schultz, Craig H.; and Schroeder, Douglas A., 388,270, Cl. D6-501.000.
Schultz, Craig H.; and Schroeder, Douglas A., to HON Industries Inc. Chair arm. 388,270, Cl. D6-501.000.
Schulz, William J.; and Cornell, Robert W., to Fiskars Inc. Rotary cutter. 388,305, Cl. D8-98.000.
Schuster, Daniel Edward: *See—*
Young, Austin Gale; and Schuster, Daniel Edward, 388,370, Cl. D12-146.000.
Scott Fetzer Company, The: *See—*
Neshat, Amir M., 388,285, Cl. D7-646.000.
Scroggins, Timothy Alvin. Barbecue grill. 388,277, Cl. D7-332.000.
Sea Gull Lighting Products, Inc.: *See—*
Bray, Douglas, 388,526, Cl. D26-134.000.
Seabert, Gordon. RF scan gun holder. 388,415, Cl. D14-114.000.
Seering, Christine L.; and Seering, Mona E. Abdominal support. 388,550, Cl. D29-101.000.
Seering, Mona E.: *See—*
Seering, Christine L.; and Seering, Mona E., 388,550, Cl. D29-101.000.
Segan, Marc H.; Strauss, Gary; Cummings, Gerald W.; and Gonser, Vint, to Long Hall Technologies, L.L.C. Combined AM/FM radio and stereo cassette player. 388,435, Cl. D14-163.000.
Segan, Marc H.; Strauss, Gary; and Cummings, Gerald W., to Long Hall Technologies, L.L.C. Stereo headphone. 388,436, Cl. D14-205.000.
Seligman, Marvin: *See—*
Lowell, Ross; Seligman, Marvin; Pronputhsri, Apiruk; Yu, Chi; and Ellis, Brian, 388,525, Cl. D26-63.000.
Serna, Ralph, to Vans, Inc. Shoe tongue cover. 388,244, Cl. D2-972.000.
Servants, Inc., The: *See—*
Brandes, Michael J., 388,317, Cl. D8-403.000.
Severin Montres AG (Severin Montres SA) (Severin Montres Ltd): *See—*
Wunderman, Severin S., 388,339, Cl. D10-39.000.
Severin Montres AG (Severin Montres SA) Severin Montres, Ltd.): *See—*
Wunderman, Severin S., 388,333, Cl. D10-32.000.
Sharp Kabushiki Kaisha: *See—*
Ohi, Hiroshi; and Kurokawa, Seiji, 388,449, Cl. D16-202.000.
Tanabe, Akira, 388,455, Cl. D18-55.000.
Shaw, Donald. Stacking skeleton heads. 388,358, Cl. D11-125.000.
Shaw, Donald. Vampire bat pumpkin lawn ornament. 388,359, Cl. D11-125.000.
Shaw, Donald. Pumpkin head figure. 388,360, Cl. D11-125.000.
Shear, Daniel Ross. Lamp. 388,528, Cl. D26-106.000.
Sheets, Jeffrey D., to Lisco, Inc. Wedge-type golf club head. 388,487, Cl. D21-219.000.
Shiau, Shoei-Shuh. Flashlight. 388,524, Cl. D26-43.000.
Shibata, Yoshinori; and Hayakawa, Naohiro, to Makita Corporation. Miter saw. 388,442, Cl. D15-133.000.
Shimano, Inc.: *See—*
Iwabuchi, Masakazu, 388,497, Cl. D22-141.000.
Shinho Electronics & Communications Co., Ltd.: *See—*
Myles, Ian James; and Schiefer, Sonja, 388,410, Cl. D14-113.000.
Myles, Ian James, 388,411, Cl. D14-113.000.
Myles, Ian James; and Schiefer, Sonja, 388,412, Cl. D14-113.000.
Shyu, Jenq-Pyng. Paper clip with hook end and square end. 388,462, Cl. D19-65.000.
Sikorski, Marek, to Industrial Thermo Polymers Limited. Float. 388,489, Cl. D21-237.000.
Sikorski, Marek, to Industrial Thermo Polymers Limited. Float. 388,490, Cl. D21-237.000.
Sikorski, Marek, to Industrial Thermo Polymers Limited. Float. 388,491, Cl. D21-237.000.
Sikorski, Marek, to Industrial Thermo Polymers Limited. Float. 388,492, Cl. D21-237.000.
Silitek Corporation: *See—*
Lin, Art, 388,405, Cl. D14-107.000.
Simmons Juvenile Products Company, Inc.: *See—*
Brunner, Merlin A.; and Draheim, Harvey J., 388,264, Cl. D6-439.000.
Simplex Time Recorder Company: *See—*
Repp, Timothy C.; Nelson, Wayne; Stanley, Lawrence G.; and Winterble, Charles, 388,351, Cl. D10-106.000.
Repp, Timothy C.; Nelson, Wayne; Stanley, Lawrence G.; and Winterble, Charles, 388,352, Cl. D10-106.000.
Sitoleux, Jacques, to Orfevrerie Christofle. Flatware. 388,284, Cl. D7-645.000.
SK Productions, L.L.C.: *See—*
Ashcraft, Daniel; Griffith, Deanna; and Solland, Kurt, 388,481, Cl. D21-196.000.

Skiffington, Richard; and Zomer, Eliezer, to Charm Sciences, Inc. Pocket-size sanitation test kit. 388,519, Cl. D24-223.000.
SMC Corporation: *See—*
Hayashi, Bunya; Miyazoe, Shinji; and Ishikawa, Makoto, 388,504, Cl. D23-233.000.
Smith, Andrew Frederick; and Trowell, Gary Nigel, to Invicta Plastics Limited. Educational board and pieces therefor. 388,461, Cl. D19-64.000.
Smith, C. Martin: *See—*
Robinson, Victor T.; Butt, Michael; and Smith, C. Martin, 388,250, Cl. D3-245.000.
Smith, Judy. Hand luggage for carrying pet supplies. 388,251, Cl. D3-291.000.
Smith, Wilson W., to Nike, Inc. Bottom surface of a shoe outsole. 388,350, Cl. D2-953.000.
Smith, Wilson W., to Nike, Inc. Portion of a shoe upper. 388,402, Cl. D2-972.000.
Smith, Wilson W., III, to Nike, Inc. Portion of a shoe outsole. 388,355, Cl. D2-960.000.
Societe Chauvin Arnoux: *See—*
Arnoux, Daniel; and Arnoux, Axel, 388,346, Cl. D10-79.000.
Soehnle-Waagen GmbH & Co.: *See—*
Fabian, Wolfgang, 388,347, Cl. D10-92.000.
Solland, Kurt: *See—*
Ashcraft, Daniel; Griffith, Deanna; and Solland, Kurt, 388,481, Cl. D21-196.000.
Sorkin, Felix L. Construction chair. 388,312, Cl. D8-354.000.
Southpac Trust International, Inc.: *See—*
Weder, Donald E.; and Straeter, Joseph G., 388,363, Cl. D11-164.000.
Spiteri, Ron J.: *See—*
Reid, Ronald J.; and Spiteri, Ron J., 388,566, Cl. D32-25.000.
Stanley, Lawrence G.: *See—*
Repp, Timothy C.; Nelson, Wayne; Stanley, Lawrence G.; and Winterble, Charles, 388,351, Cl. D10-106.000.
Repp, Timothy C.; Nelson, Wayne; Stanley, Lawrence G.; and Winterble, Charles, 388,352, Cl. D10-106.000.
Star Micronics Co., Ltd.: *See—*
Hamano, Masataka; and Kato, Katsumi, 388,450, Cl. D16-203.000.
Steel, Todd. Air torque wrench. 388,301, Cl. D8-68.000.
Steelcase, Inc.: *See—*
Benner, Douglas D.; and Battey, Joylene M., 388,313, Cl. D8-354.000.
Sterling Plastics Co.: *See—*
Markelz, Aimee J.; and Bain, Charles E., 388,465, Cl. D19-90.000.
Straeter, Joseph G.: *See—*
Weder, Donald E.; and Straeter, Joseph G., 388,363, Cl. D11-164.000.
Strauss, Gary: *See—*
Segan, Marc H.; Strauss, Gary; Cummings, Gerald W.; and Gonser, Vint, 388,435, Cl. D14-163.000.
Segan, Marc H.; Strauss, Gary; and Cummings, Gerald W., 388,436, Cl. D14-205.000.
Stringfellow, William J., to Genesis, Inc. Amusement apparatus backbox. 388,470, Cl. D21-13.000.
Stützer, Franz Alban; and Figur, Bernd, to Rowenta-Werke GmbH. Electric toothbrush. 388,252, Cl. D4-101.000.
Sugawara, Shigeru, to Tenyo Co. Savings box with coin spinner. 388,584, Cl. D99-35.000.
Sullins, Patrick H.; and Sullins, Robert D. Clipboard with padded writing surface. 388,463, Cl. D19-88.000.
Sullins, Robert D.: *See—*
Sullins, Patrick H.; and Sullins, Robert D., 388,463, Cl. D19-88.000.
Sumitomo Rubber Industries, Ltd.: *See—*
Miyazaki, Tatsuya, 388,371, Cl. D12-146.000.
Summers, David L. Life jacket with inflatable marker. 388,493, Cl. D21-238.000.
Sun Microsystems, Inc.: *See—*
Newton, James W.; and Hoffman, Larry M., 388,425, Cl. D14-114.900.
Suzuki Kabushiki Kaisha: *See—*
Nishino, Toshiyuki, 388,366, Cl. D12-110.000.
Takahata, Kenji; and Ohki, Yuji, to Casio Computer Co., Ltd. Electronic calculator having the functions of telephone book, address book, calendar, schedule book and memo book. 388,456, Cl. D18-2.000.
Takayasu, Tetsufumi; Kuwayama, Tatsuo; Kumakoshi, Takao; and Fujiwara, Hiroshi, to Kokusai Electric Co., Ltd. Portable wireless telephone. 388,431, Cl. D14-138.000.
Takemasa, Hirofumi; and Usui, Shigeo, to Matsushita Electric Industrial Co., Ltd. Computer display. 388,408, Cl. D14-113.000.
Takemasa, Hirofumi; and Usui, Shigeo, to Matsushita Electric Industrial Co., Ltd. Computer display. 388,409, Cl. D14-113.000.
Takemasa, Hirofumi, to Matsushita Electric Industrial Co., Ltd. Computer display. 388,413, Cl. D14-113.000.
Takemura, Shun, to Itoya of America, Ltd. Writing pen with a base. 388,458, Cl. D19-36.000.
Tanabe, Akira, to Sharp Kabushiki Kaisha. Printer. 388,455, Cl. D18-55.000.
Tanaka, Keita, to Kabushiki Kaisha Toshiba. Electronic computer. 388,401, Cl. D14-106.000.
Tarlow, Kenneth: *See—*
Cambra, Bené M.; and Tarlow, Kenneth, 388,256, Cl. D6-358.000.
Taylor, Craig V. Top and sides of a trash container lid. 388,579, Cl. D34-11.000.
Tedesco, Romeo; and Beaulieu, Jocelyn, to Global Upholstery Company. Pair of chair arms. 388,269, Cl. D6-501.000.
Tefal S.A.: *See—*
Candiamides, Florence, 388,279, Cl. D7-391.000.
Tekonsha Engineering Company: *See—*
Austin, Barry G., 388,523, Cl. D26-28.000.
Teledyne Industries, Inc.: *See—*
Cantley, George A.; and Prince, David L., 388,439, Cl. D15-7.000.
Telefonaktiebolaget LM Ericsson: *See—*
Lindahl, Richard; and Waldner, Thomas William, 388,428, Cl. D14-138.000.
Tenyo Co.: *See—*
Sugawara, Shigeru, 388,584, Cl. D99-35.000.
Thomson Consumer Electronics: *See—*
Lytel, Ronald L., 388,432, Cl. D14-149.000.
Thrasher, D. C.: *See—*
Hughins, B. Wayne; Thrasher, D. C.; and Todd, C. Mark, 388,342, Cl. D10-46.100.
Thuma, Michael: *See—*
Scherer, Craig; and Thuma, Michael, 388,311, Cl. D8-353.000.
Tochishita, Masaru, to Matsushita Electric Industrial Co., Ltd. Portable laptop computer. 388,403, Cl. D14-106.000.
Todd, C. Mark: *See—*
Hughins, B. Wayne; Thrasher, D. C.; and Todd, C. Mark, 388,342, Cl. D10-46.100.
Toft, Hanne, to Interlego AG. Toy baby doll. 388,480, Cl. D21-166.000.
Tokiyama, Masaru; and Oross, Glen A., to Motorola, Inc. Control head for a mobile radio. 388,438, Cl. D14-258.000.
Toulis, Tadeo; Behar, Yves; and Lee, Peter, to Hewlett-Packard Company. Monitor for personal computers. 388,407, Cl. D14-113.000.
Touma, Kenichi: *See—*
Rick, Bradley G.; Guerra, Jonathan; Murakami, Seiji; and Touma, Kenichi, 388,510, Cl. D23-355.000.
Tresser, Christian J., to Nike, Inc. Portion of a shoe outsole. 388,314, Cl. D2-954.000.
Trombley, Edgar F., to Punch Products USA, Inc. Golf mug. 388,281, Cl. D7-515.000.
Trowell, Gary Nigel: *See—*
Smith, Andrew Frederick; and Trowell, Gary Nigel, 388,461, Cl. D19-64.000.
True Temper Hardware Company: *See—*
Haver, Stephen T.; and Richwine, Karen A., 388,293, Cl. D8-10.000.
Rich, Christopher T.; Albert, Barry R.; and Pursel, Mark W., 388,292, Cl. D8-10.000.
Tucker, Edward; Lucken, George; Gross, Luke; Cruz, Mark; and Melvan, Jack F., to First Brands Corporation. Container for food. 388,325, Cl. D9-425.000.
Tuggle, Lloyd H.; Houge, Michael S.; and Brant, Ronald G., to WCI Outdoor Products, Inc. Cordless electric blower. 388,561, Cl. D32-15.000.
Tuttle, Mark E. Personal elevated agricultural bed. 388,362, Cl. D11-155.000.
Uemura, Tomohiro; and Ishida, Koichi, to Kao Kabushiki Kaisha (Kao Corporation). Beauty mask sheet for nose. 388,533, Cl. D28-4.000.
Uemura, Tomohiro; and Ishida, Koichi, to Koa Kabushiki Kaisha (Kao Corporation). Beauty mask sheet for nose. 388,534, Cl. D28-4.000.
Ullmann, Roland, to Braun Aktiengesellschaft. Electric shaver with a beard-styling attachment. 388,542, Cl. D28-49.000.
Underwater Diving, Inc.: *See—*
Dreyfus, Lowell J., 388,452, Cl. D16-339.000.
U.S. Philips Corporation: *See—*
Kip, Albert Johannes, 388,538, Cl. D28-18.000.
Usui, Shigeo: *See—*
Takemasa, Hirofumi; and Usui, Shigeo, 388,408, Cl. D14-113.000.
Takemasa, Hirofumi; and Usui, Shigeo, 388,409, Cl. D14-113.000.
V.A. Wolf Inc.: *See—*
Lupo, Vincent A., 388,243, Cl. D2-963.000.
Vans, Inc.: *See—*
Serna, Ralph, 388,244, Cl. D2-972.000.
Vaught, Alan. Combination letter opener and staple remover. 388,306, Cl. D8-104.000.
VDO Adolf Schindling AG: *See—*
Kraus, Ulrich, 388,348, Cl. D10-98.000.
Vestuti, Ricardo, to Nike, Inc. Portion of a shoe upper. 388,364, Cl. D2-972.000.
Vetter, Craig W. Motorcycle front shield with wings. 388,387, Cl. D12-182.000.
Villamizar, William Urbano: *See—*
Breny, Michel Alfred Marie Oscar; and Villamizar, William Urbano, 388,373, Cl. D12-147.000.
W.S. S.p.A.: *See—*
Pietrobon, Silvano, 388,565, Cl. D32-23.000.
Wagner, Linda Lee. Photo album video cassette holder. 388,457, Cl. D19-26.000.
Wagner Spray Tech Corporation: *See—*
Buttenbender, Klaus, 388,297, Cl. D8-29.100.
Jerdee, Jeffrey S.; Pilosi, Paul A.; and Schoenert, Richard C., 388,298, Cl. D8-29.100.
Waldner, Thomas William: *See—*
Lindahl, Richard; and Waldner, Thomas William, 388,428, Cl. D14-138.000.
Walkabout, Inc.: *See—*
Patterson, Matt T., 388,246, Cl. D3-204.000.
Walls, Ruth. Attachable back scrubber. 388,547, Cl. D28-63.000.
Wander, Marc H. Cigar perforator. 388,532, Cl. D27-195.000.
Wang, Chih-Hung. Tea brewing container. 388,274, Cl. D7-317.000.

Wang, Jui-Shang: *See—*
Jane', Rodney; Wang, Jui-Shang; Gresens, Stanley; and Holderfield, Gregory, 388,511, Cl. D23-358.000.
Warner-Lambert Company: *See—*
Haner, Linda; and Davis, Martha, 388,331, Cl. D9-571.000.
WCI Outdoor Products, Inc.: *See—*
Tuggle, Lloyd H.; Houge, Michael S.; and Brant, Ronald G., 388,561, Cl. D32-15.000.
Weaver, Vernon P. Ear shield. 388,552, Cl. D29-112.000.
Weber, Cindy: *See—*
Benting, Gary M.; Mueller, Eric J.; and Weber, Cindy, 388,262, Cl. D6-419.000.
Weder, Donald E.; and Straeter, Joseph G., to Southpac Trust International, Inc. Flower pot cover. 388,363, Cl. D11-164.000.
Wei, Chao. Wrench. 388,296, Cl. D8-28.000.
Wenger Corporation: *See—*
Benting, Gary M.; Mueller, Eric J.; and Weber, Cindy, 388,262, Cl. D6-419.000.
Wescon Products Company: *See—*
Israel, Gary P., 388,569, Cl. D32-41.000.
Widmayer, Robert B.; and Larson, Kenneth W., to Motorola, Inc. Heat sink. 388,399, Cl. D13-179.000.
Williams, David A.: *See—*
Achterberg, Nicholas E.; and Williams, David A., 388,318, Cl. D6-499.000.
Williams, Geoffrey T.: *See—*
Gogan, Donald M.; and Williams, Geoffrey T., 388,394, Cl. D12-407.000.
Williams, James L. Trailer chain holder. 388,382, Cl. D12-162.000.
Williams, James L. Trailer chain holder. 388,384, Cl. D12-162.000.
Williams, Pat Grant: *See—*
Jones, Maria Vanessa; Ferguson, Angela; and Williams, Pat Grant, 388,537, Cl. D28-10.000.
Wilson, Sara H.: *See—*
Wilson, Warren J.; and Wilson, Sara H., 388,235, Cl. D1-115.000.
Wilson, Warren J.; and Wilson, Sara H. Leaf-shaped edible product. 388,235, Cl. D1-115.000.
Winter, Paul Henry: *See—*
Newkirk, John Robert; and Winter, Paul Henry, 388,267, Cl. D6-479.000.
Winterble, Charles: *See—*
Repp, Timothy C.; Nelson, Wayne; Stanley, Lawrence G.; and Winterble, Charles, 388,351, Cl. D10-106.000.
Repp, Timothy C.; Nelson, Wayne; Stanley, Lawrence G.; and Winterble, Charles, 388,352, Cl. D10-106.000.
Wright, Bruce R.: *See—*
McGinnis, John E.; and Wright, Bruce R., 388,392, Cl. D12-333.000.
Wright, Laura Sheley: *See—*
DeMuro, David Mark; Mitchell, John Francis; Wright, Laura Sheley; and Douros, Kenneth William, 388,424, Cl. D14-114.900.
Wu, Ching-Chang. Golf cart handlebar with score board. 388,581, Cl. D34-27.000.
Wunderman, Severin S., to Severin Montres AG (Severin Montres SA) Severin Montres, Ltd.). Watch bracelet. 388,333, Cl. D10-32.000.
Wunderman, Severin S., to Severin Montres AG (Severin Montres SA) (Severin Montres Ltd). Watch. 388,339, Cl. D10-39.000.
Yamamoto, Shinji: *See—*
Eguchi, Kyoko; and Yamamoto, Shinji, 388,543, Cl. D28-53.000.
Yamauchi, Takanobu; Kobayashi, Yutaka; and Montgomery, Steven M., to Omron Corporation. Ear-inserted-type clinical thermometer. 388,343, Cl. D10-57.000.
Youabian, Ramin. Remote control transmitter. 388,349, Cl. D10-104.000.
Young, Austin Gale; and Schuster, Daniel Edward, to Goodyear Tire & Rubber Company, The. Tire tread. 388,370, Cl. D12-146.000.
Yu, Chi: *See—*
Lowell, Ross; Seligman, Marvin; Pronputhari, Apirak; Yu, Chi; and Ellis, Brian, 388,525, Cl. D26-63.000.
Yudovin, Sanford S. Golf wrist watch. 388,337, Cl. D10-33.000.
Yurchak, Mitchell G. Popcorn vending machine. 388,466, Cl. D20-1.000.
Zenith Products Corporation: *See—*
Newkirk, John Robert; and Winter, Paul Henry, 388,267, Cl. D6-479.000.
Zimmer, Gregory A., to Procter & Gamble Company, The. Bottle. 388,330, Cl. D9-543.000.
Zomer, Eliezer: *See—*
Skiffington, Richard; and Zomer, Eliezer, 388,519, Cl. D24-223.000.

LIST OF PLANT PATENTEES

Ball Horticulture Company: *See—*
Trees, Scott C., 10,171, Cl. Plt.-87.600.
Bear Creek Gardens, Inc.: *See—*
Olesen, Mogens N.; and Olesen, Pernille, 10,164, Cl. Plt.-9.000.
Cain, David W.: *See—*
Fear, Carlos D.; Mowrey, Bruce D.; and Cain, David W., 10,165, Cl. Plt.-39.000.
Commercial Nursery Co., Inc.: *See—*
Nicholson, Hubert A., deceased, 10,166, Cl. Plt.-53.200.
Evison, Raymond J., to Poulsen Roser International S.A.R.L. Clematis plant named 'Evitwo'. 10,167, Cl. Plt.-54.100.
Fear, Carlos D.; Mowrey, Bruce D.; and Cain, David W., to Sun World, Inc. Apricot tree 'Suapriseven'. 10,165, Cl. Plt.-39.000.
Green Circle Growers, Inc.: *See—*
Van Wingerden, John, 10,168, Cl. Plt.-69.100.
Van Wingerden, John, 10,169, Cl. Plt.-69.100.
Van Wingerden, John, 10,170, Cl. Plt.-69.200.
Mowrey, Bruce D.: *See—*
Fear, Carlos D.; Mowrey, Bruce D.; and Cain, David W., 10,165, Cl. Plt.-39.000.
Nicholson, Hubert A., deceased (by Mary J. Nicholson, executor), to Commercial Nursery Co., Inc. Dogwood tree 'Comco No. 1'. 10,166, Cl. Plt.-53.200.
Nicholson, Mary J., executor: *See—*
Nicholson, Hubert A., deceased, 10,166, Cl. Plt.-53.200.
Olesen, Mogens N.; and Olesen, Pernille, to Bear Creek Gardens, Inc. Miniature rose plant named 'Poultin'. 10,164, Cl. Plt.-9.000.
Olesen, Pernille: *See—*
Olesen, Mogens N.; and Olesen, Pernille, 10,164, Cl. Plt.-9.000.
Poulsen Roser International S.A.R.L.: *See—*
Evison, Raymond J., 10,167, Cl. Plt.-54.100.
Sun World, Inc.: *See—*
Fear, Carlos D.; Mowrey, Bruce D.; and Cain, David W., 10,165, Cl. Plt.-39.000.
Trees, Scott C., to Ball Horticulture Company. New Guinea Impatiens named 'BFP-698 Cherry'. 10,171, Cl. Plt.-87.600.
Van Wingerden, John, to Green Circle Growers, Inc. Saintpaulia plant named 'Halo'. 10,168, Cl. Plt.-69.100.
Van Wingerden, John, to Green Circle Growers, Inc. Saintpaulia plant named 'Sunbeam'. 10,169, Cl. Plt.-69.100.
Van Wingerden, John, to Green Circle Growers, Inc. Saintpaulia plant named 'Radiance'. 10,170, Cl. Plt.-69.200.

CLASSIFICATION OF PATENTS

ISSUED DECEMBER 30, 1997

NOTE—First number, class; second number, subclass; third number, patent number

CLASS 2

49.1	5,701,605
[illegible]	5,701,712
[illegible]	5,701,606
209.13	5,701,607
406	[illegible]
422	[illegible]
425	5,701,610
455	5,701,611

CLASS 4

144.3	5,701,612
502	5,701,613
555	5,701,614
559	5,701,615

CLASS 5

8	5,701,616
[illegible]	5,701,617
611	5,701,618
625	5,701,619
658	5,701,620
[illegible]	5,701,621
713	5,701,622
739	5,701,623

CLASS 8

94.23	5,702,490
159	5,701,624

CLASS 15

21.1	5,701,625
[illegible]	5,701,626
[illegible]	5,701,627
[illegible]	5,701,628
207.2	5,701,629
[illegible]	5,701,630
327.1	5,701,631
330	5,701,632
[illegible]	5,701,633

CLASS 16

2.1	5,701,634
114 R	5,701,635
238	5,701,636

CLASS 19

114	5,701,637

CLASS 24

33 P	5,701,638
71 SK	5,701,639
303	5,701,640

CLASS 26

80	5,701,641

CLASS 27

[illegible]	5,701,642

CLASS 28

[illegible]	5,701,643
[illegible]	5,701,644

CLASS 29

25.35	5,701,645
	5,701,646
25.42	5,701,647
33 R	5,701,648
252	5,701,649
267	5,701,650
281.5	5,701,651
426.3	5,701,652
432	5,701,653
434	5,701,654
513	5,701,655
558	5,701,656
[illegible]	5,701,657
622	5,701,660
671	5,701,659
721	5,701,661
741	5,701,662
783	5,701,663
822	5,701,664
825	5,701,665
831	5,701,666
852	5,701,667
888.02	5,701,668
[illegible]	5,701,669
[illegible]	5,701,670
893.35	5,701,671

CLASS 30

28	5,701,672
34.1	5,701,673
41	5,701,674
123	5,701,675
388	5,701,676

CLASS 33

1 M	5,701,677
268	5,701,678
293	5,701,679
526	5,701,680

CLASS 34

97	5,701,681
115	5,701,682
303	B1 5,044,091
394	5,701,683
595	5,701,684

CLASS 36

7.8	5,701,685
27	5,701,686
29	5,701,687
72 R	5,701,688
115	5,701,689

CLASS 37

219	5,701,690
231	Re.35,700
348	5,701,691
353	5,701,692
381	5,701,693

CLASS 40

493	5,701,694
606	5,701,695
642.02	5,701,696
791	5,701,697

CLASS 42

69.02	5,701,698

CLASS 47

[illegible]	5,702,965
57.6	5,701,699
	5,701,700

CLASS 48

197 R	5,702,491

CLASS 49

116	5,701,701
169	5,701,702

CLASS 51

307	5,702,492

CLASS 52

36.5	5,701,703
64	5,701,704
[illegible]	5,701,705
[illegible]	5,701,706
223.13	5,701,707
[illegible]	5,701,708
[illegible]	5,701,709
426	5,701,710
506.03	5,701,711
[illegible]	5,701,713
[illegible]	5,701,714
[illegible]	5,701,715
713	5,701,716

CLASS 53

117	5,701,717
[illegible]	5,701,718
247	5,701,719
[illegible]	5,701,720
	5,701,721
[illegible]	5,701,722
[illegible]	5,701,723
451	5,701,724
466	5,701,725
544	5,701,726
569	5,701,727

CLASS 55

[illegible]	5,702,493
[illegible]	5,702,494

CLASS 56

12.7	5,701,728

CLASS 57

[illegible]	5,701,729
[illegible]	5,701,730

CLASS 60

[illegible]	5,701,731
[illegible]	5,701,732
[illegible]	5,701,733
[illegible]	5,701,735
[illegible]	5,701,736
[illegible]	5,701,737
435	5,701,738
453	5,701,739
505	5,701,740
602	5,701,741

CLASS 62

6	5,701,742
	5,701,743
47.1	5,701,744
51.1	5,701,745
[illegible]	5,701,746
[illegible]	5,701,748
[illegible]	5,701,749
[illegible]	5,701,750
[illegible]	5,701,751
[illegible]	5,701,752
211	5,701,753
[illegible]	5,701,754
[illegible]	5,701,755
[illegible]	5,701,756
457.2	5,701,757
[illegible]	5,701,758
	5,701,759
[illegible]	5,701,760
613	5,701,761
[illegible]	5,701,762
[illegible]	5,701,763
646	5,701,764

CLASS 63

15.4	5,701,765

CLASS 65

17.1	5,702,495
102	5,702,496
412	5,702,497
453	5,702,498

CLASS 66

70	5,701,766

CLASS 68

63	5,701,747
134	5,701,767

CLASS 70

[illegible]	5,701,768
19	5,701,769
[illegible]	5,701,770
233	5,701,771
284	5,701,772
[illegible]	5,701,773

CLASS 71

9	5,702,499

CLASS 72

[illegible]	5,701,774
201	5,701,775
332	5,701,776
[illegible]	5,701,777
351	5,701,778
[illegible]	5,701,779
379.2	[illegible]
[illegible]	5,701,781
452.4	5,701,782

CLASS 73

[illegible]	5,703,276
1.12	5,703,277
[illegible]	5,703,278
[illegible]	5,703,279
	5,703,280
40.7	5,703,281
115	5,703,282
116	5,703,283
118.1	5,703,285
146	5,703,284
152.05	5,703,286
[illegible]	5,703,287
	5,703,288
290 V	5,703,289
430	[illegible]
487	5,703,291
504.02	5,703,292
	5,703,293
[illegible]	[illegible]
593	[illegible]
756	[illegible]
	5,703,297
[illegible]	[illegible]
863.83	[illegible]
[illegible]	[illegible]
[illegible]	[illegible]
865.8	[illegible]
[illegible]	[illegible]

CLASS 74

[illegible]	5,701,783
126	5,701,784
[illegible]	5,701,785
[illegible]	5,701,786

CLASS 75

10.25	5,702,500
243	5,703,304
255	5,702,501
501	5,702,502

CLASS 76

83	5,701,787
104.1	5,701,788

CLASS 83

13	5,701,789
140	5,701,790
277	5,701,791

CLASS 84

95.1	[illegible]
421	[illegible]
[illegible]	5,703,307
609	[illegible]
	5,703,309
	5,703,310
622	5,703,311
	5,703,313
626	5,703,312

CLASS 89

1.11	5,703,314
1.14	5,703,315
36.08	5,703,316
37.03	5,703,317
37.07	5,703,318

CLASS 91

361	5,701,793
376 R	5,701,794
446	5,701,795
512	5,701,796

CLASS 92

80	5,701,797
88	5,701,798
[illegible]	5,701,799
[illegible]	5,701,800
[illegible]	5,701,801
[illegible]	5,701,802
[illegible]	5,701,803

CLASS 95

[illegible]	5,702,503
101	5,702,504
115	5,702,505
287	5,702,506

CLASS 96

55	5,702,507
118	5,702,508

CLASS 99

[illegible]	5,701,804
331	5,701,805
353	5,701,806
422	5,701,807
453	[illegible]
[illegible]	5,701,809
[illegible]	5,701,810

CLASS 100

50	5,701,811
91	5,701,812
269.15	5,701,814

CLASS 101

[illegible]	5,701,816
211	5,701,815
[illegible]	5,701,817
[illegible]	5,701,818
[illegible]	[illegible]
424	[illegible]
	[illegible]
477	[illegible]
[illegible]	[illegible]

CLASS 102

275.7	5,703,319
	[illegible]
427	5,703,321
440	[illegible]

CLASS 104

112	[illegible]

CLASS 105

[illegible]	[illegible]

CLASS 106

[illegible]	[illegible]
31.32	5,702,511
31.6	[illegible]
31.75	5,702,512
31.93	5,702,513
35	5,702,514
200.2	5,702,515
287.35	5,702,516
316	5,702,517
439	5,702,518
442	5,702,519
[illegible]	[illegible]
713	5,702,521

CLASS 108

44	5,701,826
[illegible]	5,701,827

CLASS 109

56	[illegible]

CLASS 110

238	5,701,829

CLASS 112

102.5	5,701,830
103	5,701,831
155	5,701,832
475.16	5,701,833

CLASS 114

48	5,701,834
56	5,701,835
67 A	5,701,836
219	5,701,837
264	5,701,839

CLASS 116

28.1	5,701,838
174	5,701,840

CLASS 117

2	5,702,522
[illegible]	5,702,523

CLASS 118

[illegible]	5,702,524
	5,702,525
213	5,702,526
[illegible]	5,702,527
[illegible]	[illegible]
[illegible]	5,702,531
[illegible]	5,702,529
[illegible] MP	5,702,530
[illegible]	5,702,532
733	5,702,533

CLASS 119

52.2	5,701,841
	5,701,842
166	5,701,844
	5,701,845
496	5,701,843
526	5,701,846
797	5,701,848
865	5,701,849

CLASS 122

235.23	5,701,850

CLASS 123

41.1	5,701,851
41.14	[illegible]
41.33	[illegible]
[illegible]	[illegible]
[illegible] AD	[illegible]
	[illegible]
[illegible]	[illegible]
90.17	[illegible]
[illegible]	[illegible]
	[illegible]
[illegible]	[illegible]
[illegible] S	[illegible]
[illegible] D	[illegible]
290	[illegible]
[illegible]	[illegible]
[illegible]	[illegible]
[illegible]	[illegible]
[illegible]	[illegible]
[illegible]	[illegible]
[illegible]	[illegible]
495	5,701,872
[illegible]	[illegible]
516	5,701,873
[illegible]	5,701,874
[illegible]	[illegible]
630	[illegible]
[illegible]	5,701,877

CLASS 124

67	[illegible]
69	[illegible]
88	[illegible]

CLASS 126

163 R	5,701,881
523	5,701,882

CLASS 128

[illegible]	[illegible]
[illegible]	[illegible]
[illegible]	[illegible]
[illegible]	[illegible]
[illegible]	[illegible]
204.26	[illegible]
204.29	[illegible]
205.24	[illegible]
205.29	[illegible]
206.19	[illegible]
206.24	[illegible]
[illegible]	[illegible]
	[illegible]
[illegible]	[illegible]
	[illegible]
[illegible]	[illegible]
662.06	[illegible]
[illegible]	[illegible]
[illegible]	[illegible]
[illegible]	[illegible]
673	[illegible]
[illegible]	[illegible]
	[illegible]
713	[illegible]
731	[illegible]
[illegible]	5,701,910
772	5,701,911
773	5,701,912
774	5,701,913
842	5,701,914
	5,701,915
885	5,701,916
897	5,701,917
	5,701,918
898	5,701,919

CLASS 132

212	5,701,920
309	5,701,921

CLASS 134

7	5,702,534
10	5,702,535
	[illegible]
15	5,702,537
100.1	5,701,922

CLASS 135

131	5,701,923

CLASS 136

[illegible]	[illegible]

CLASS 137
3 5,701,924
119.05 5,701,925
218 5,701,926
271 5,701,927
312 5,701,928
375 5,701,929
454.5 5,701,930
533.29 5,701,931
558 5,701,932
596.12 5,701,933
625.46 5,701,934

CLASS 138
89 5,701,935

CLASS 140
24 5,701,936

CLASS 141
244 5,701,937

CLASS 144
363 5,701,938

CLASS 148
111 5,702,539
223 5,702,540
308 5,702,541
406 5,702,542
592 5,702,543
672 5,702,544

CLASS 149
88 5,703,323

CLASS 152
209 A 5,702,545
209 R 5,702,546
451 5,702,547
547 5,702,548
548 5,702,549

CLASS 156
64 5,702,550
73.1 5,702,551
197 5,702,552
203 5,702,553
219 5,702,554
247 5,702,555
261 5,702,556
275.7 5,702,557
323 5,702,558
450 5,702,559
512 5,702,560
580 5,702,561
626.1 5,702,562
636.1 5,702,563
643.1 5,702,564
5,702,565
5,702,566
644.1 5,702,567
5,702,568
662.1 5,702,569

CLASS 160
84.01 5,701,939
84.05 5,701,940
180 5,701,813
199 5,701,941

CLASS 162
30.1 5,702,570
117 5,702,571

CLASS 164
71.1 5,701,942
97 5,701,943
113 5,701,944
130 5,701,945
201 5,701,946
341 5,701,947
480 5,701,948

CLASS 165
42 5,701,949
121 5,701,951
168 5,701,952
222 5,701,950

CLASS 166
75.13 5,701,953
119 5,701,954
295 5,701,955
5,701,956
297 5,701,957
298 5,701,958
387 5,701,959

CLASS 172
219 5,701,960

CLASS 173
15 5,701,961

CLASS 174
21 C 5,703,324
50 5,703,325
50.52 5,703,326
53 5,703,327
65 R 5,703,328
67 5,703,329
72 A 5,703,330
254 5,703,331

CLASS 175
4.6 5,701,964
24 5,701,962
215 5,701,963

CLASS 177
52 5,703,332
139 5,703,333
201 5,703,334

CLASS 180
7.1 5,701,965
7.2 5,701,966
19.3 5,701,967
65.1 5,701,968
300 5,701,969
417 5,701,970

CLASS 181
150 5,703,335
179 5,703,336
206 5,703,337
264 5,703,338

CLASS 182
179 5,701,971
234 5,701,972

CLASS 187
316 5,701,973

CLASS 188
1.11 R 5,701,974
52 5,701,975
71.5 5,701,976
72.9 5,701,977
73.32 5,701,978

CLASS 190
8 5,701,979

CLASS 191
4 5,701,980
12.4 5,701,981

CLASS 192
3.3 5,701,982
35 5,701,983
53.35 5,701,984
58.681 5,701,985
70.12 5,701,986

CLASS 194
241 5,701,988

CLASS 198
370.06 5,701,992
448 5,701,989
604 5,701,990
836.1 5,701,991

CLASS 200
17 R 5,703,339
264 5,701,993

CLASS 204
157.15 5,702,572
192.12 5,702,573
224 R 5,702,574
292 5,702,575
415 5,702,576
426 5,702,580
486 5,702,578
5,702,581
522 5,702,579
632 5,702,582

CLASS 205
82 5,702,583
158 5,702,584
468 5,702,585
640 5,702,586
695 5,702,588
760 5,702,587

CLASS 206
203 5,701,994
205 5,701,995
287 5,701,996
308.1 5,701,997
318.1 5,701,998
320 5,701,999
388 5,702,001
418 5,702,002
457 5,702,003
718 5,702,005

CLASS 208
87 5,702,589
251 R 5,702,590

CLASS 209
167 5,702,591

CLASS 210
90 5,702,592
122 5,702,593
151 5,702,594
163 5,702,595
166 5,702,596
195.2 5,702,597
222 5,702,600
223 5,702,598
248 5,702,599
321.79 5,702,601
342 5,702,602
493.1 5,702,603
603 5,702,604
632 5,702,605
646 5,702,606
663 5,702,607
668 5,702,608
669 5,702,609
670 5,702,610
686 5,702,611
703 5,702,612
708 5,702,613
738 5,702,614
759 5,702,615
767 5,702,616
803 5,702,617

CLASS 211
17 5,702,007
18 5,702,006
57.1 5,702,008
74 5,702,009
105.1 5,702,010
135 5,702,011

CLASS 213
62 R 5,702,012

CLASS 215
206 5,702,013
217 5,702,014
232 5,702,015
301 5,702,019

CLASS 216
2 5,702,618
5,702,619
49 5,702,620

CLASS 219
121.48 5,703,340
121.59 5,702,621
121.68 5,703,341
121.75 5,702,622
436 5,702,623
497 5,702,624
5,703,342
687 5,703,343
702 5,702,625
711 5,702,626

CLASS 220
2.3 A 5,702,016
23.4 5,702,017
203.13 5,702,018
326 5,702,021
509 5,702,022
582 5,702,023
704 5,702,024
709 5,702,020
717 5,702,025
745 5,702,026

CLASS 221
84 5,702,027
186 5,702,028
221 5,702,029
254 5,702,030

CLASS 222
1 5,702,031
63 5,702,032
94 5,702,033
143 5,702,034
187 5,702,035
402.13 5,702,036

CLASS 223
30 5,702,037

CLASS 224
409 5,702,038
5,702,039
511 5,702,040
539 5,702,041
662 5,702,042

CLASS 226
92 5,702,043
173 5,702,044
191 5,702,045

CLASS 227
110 5,702,046
131 5,702,047
177.1 5,702,048

CLASS 228
105 5,702,049
212 5,702,050
234.2 5,702,051

CLASS 229
4.5 5,702,052
87.02 5,702,053
110 5,702,054

CLASS 235
44.1 5,703,346
379 5,703,344
384 5,703,345
462 5,702,059
472 5,703,347
5,703,348
5,703,349
492 5,703,350

CLASS 237
214 5,702,055

CLASS 239
206 5,702,056
288.3 5,702,057
343 5,702,058

CLASS 241
93 5,702,061
175 5,702,060

CLASS 242
125.2 5,702,063
338.4 5,702,062
5,702,064
342 5,702,065
601 5,702,066

CLASS 244
3.16 5,702,068
57 5,702,073
161 5,702,069
170 5,702,067
183 5,702,070
199 5,702,071
225 5,702,072

CLASS 246
428 5,702,074

CLASS 248
51 5,702,075
57 5,702,076
59 5,702,077
118 5,702,078
127 5,702,079
205.5 5,702,080
218.4 5,702,081
230.1 5,702,082
404 5,702,083
416 5,702,084
475.1 5,702,085
519 5,702,086
638 5,702,087

CLASS 249
33 5,702,627
61 5,702,628

CLASS 250
201.2 5,703,351
208.1 5,703,352
214 C 5,703,353
214 VT 5,703,354
214.1 5,703,355
221 5,703,356
226 5,703,357
282 5,703,358
288 5,703,359
5,703,360
292 Re.35,701
310 5,703,361
332 5,703,363
339.12 5,703,364
339.13 5,703,365
341.2 5,703,366
341.8 5,703,362
342 5,703,367
349 5,703,368
363.01 5,703,369
376 5,703,370
390.02 5,703,371
423 R 5,703,372
491.1 5,703,373
492.2 5,703,374
492.21 5,703,375
492.22 5,703,376
559.45 5,703,377

CLASS 252
62.52 5,702,630
62.9 R 5,702,629
67 5,702,632
78 5,702,631
180 5,702,634
182.12 5,703,378
186.27 5,702,635
299 5,702,639
299.01 5,702,636
5,702,640
299.61 5,702,637
299.62 5,702,638
299.63 5,702,641
299.66 5,702,642
301.65 5,702,643
356 5,702,644
386 5,702,645

CLASS 254
266 5,702,088
422 5,702,089

CLASS 256
19 5,702,090

CLASS 257
10 5,703,380
21 5,703,379
48 5,703,381
72 5,703,382
139 5,703,383
5,703,384
212 5,703,385
230 5,703,386
315 5,703,387
5,703,388
327 5,703,389
337 5,703,390
382 5,703,391
392 5,703,392
419 5,703,393
433 5,703,394
681 5,703,395
692 5,703,396
701 5,703,397
706 5,703,398
723 5,703,399
5,703,400
727 5,703,401
737 5,703,402
751 5,703,403
758 5,703,404
777 5,703,405
778 5,703,406
783 5,703,407
784 5,703,408

CLASS 261
89 5,702,646
114.5 5,702,647
142 5,702,648

CLASS 264
1.9 5,702,649
16 5,702,650
34 5,702,651
37 5,702,652
61 5,702,653
82 5,702,654
85 5,702,655
102 5,702,656
112 5,702,657
172.14 5,702,658
177.11 5,702,659
242 5,702,660
400 5,702,662
510 5,702,663
515 5,702,664
521 5,702,665
544 5,702,666

CLASS 266
249 5,702,667

CLASS 267
64.12 5,702,091
64.15 5,702,092
132 5,702,093
140.12 5,702,094

CLASS 269
37 5,702,095
43 5,702,096

CLASS 270
58.06 5,702,097
5,702,098

CLASS 271
101 5,702,099
302 5,702,100

CLASS 273
144 B 5,702,101
148 R 5,702,102
243 5,702,103
272 5,702,105
292 5,702,104
5,702,106
442 5,702,107
447 5,702,108

CLASS 277
34 5,702,109
96.1 5,702,110
228 5,702,111

CLASS 279
19 5,702,112

CLASS 280
11.2 5,702,113
47.23 5,702,114
47.35 5,702,115
160 5,702,117
284 B1 5,474,318
491.5 5,702,118
625 5,702,119
642 5,702,120
689 5,702,121
691 5,702,122
735 5,702,123
5,702,124
834 5,702,125

CLASS 281
29 5,702,126

CLASS 283
81 5,702,127
5,702,128

CLASS 284
383 5,704,053

CLASS 285
45 5,702,129
96 5,702,130
139.3 5,702,131
235 5,702,132

CLASS 290
40 C 5,703,410

CLASS 292
80 5,702,133
92 5,702,134
145 5,702,135
336.3 5,702,136

CLASS 294
1.4 5,702,137
5,702,138
88 5,702,139
146 5,702,140

CLASS 295
7 5,702,141

CLASS 296
19 5,702,142
24.1 5,702,143
37.13 5,702,144
66 5,702,145
96.21 5,702,146
106 5,702,147
146.9 5,702,148
152 5,702,149
180.1 5,702,150
187 5,702,151

CLASS 297
133 5,702,152
256.16 5,702,153
257 5,702,154
362.11 5,702,155
367 5,702,156

411.38 5,702,157
445.1 5,702,158
452.48 5,702,159

CLASS 299
37.1 5,702,161
111 5,702,160

CLASS 301
105.1 5,702,162

CLASS 303
9.62 5,702,163
139 5,702,164
146 5,702,165

CLASS 307
10.1 5,703,411
5,703,412
10.5 5,703,413
5,703,414
66 5,703,415
89 5,703,416

CLASS 310
12 5,703,417
5,703,418
49 R 5,703,419
54 5,703,420
61 5,703,421
82 5,703,422
90.5 5,703,423
5,703,424
114 Re.35,702
258 5,703,426
313 D 5,703,427
366 5,703,425

CLASS 312
107 5,702,166
221 5,702,167
405 5,702,168

CLASS 313
318.1 5,703,428
346 R 5,703,429
409 5,703,430
461 5,703,431
5,703,432
484 5,703,433
495 5,703,435
506 5,703,436
587 5,703,437

CLASS 315
56 5,703,440
209 R 5,703,439
210 5,703,821
291 5,703,438
307 5,703,441
5,703,442
370 5,703,443
371 5,703,444
387 5,703,445

CLASS 318
119 5,703,446
139 5,703,447
245 5,703,448
254 5,703,449
379 5,703,450
492 5,703,451
558 5,703,452
625 5,703,453
685 5,703,454
5,703,455
701 5,703,456
5,703,457
799 5,703,458
808 5,703,459

CLASS 320
2 5,703,460
5,703,461
5,703,462
13 5,703,463
19 5,703,464
22 5,703,465
23 5,703,466
39 5,703,468
48 5,703,469
49 5,703,470
51 5,703,471
106 5,703,467

CLASS 322
28 5,703,472

CLASS 323
282 5,703,473
299 5,703,474
313 5,703,475
5,703,476
5,703,477
315 5,703,478

CLASS 324
73.1 5,703,479
76.82 5,703,480
127 5,703,481
158.1 5,703,482
173 5,703,483
207.22 5,703,484
230 Re.35,703
235 5,703,485
427 5,703,486
456 5,703,487
464 5,703,488
601 5,703,489
650 5,703,490
750 5,703,491
751 5,703,492
755 5,703,493
761 5,703,494
763 5,703,495

CLASS 326
27 5,703,496
33 5,703,497
40 5,703,498
62 5,703,499
71 5,703,500
96 5,703,501

CLASS 327
3 5,703,502
58 5,703,503
72 5,703,504
75 5,703,505
87 5,703,506
99 5,703,507
111 5,703,508
119 5,703,509
143 5,703,510
157 5,703,511
198 5,703,512
202 5,703,513
237 5,703,514
294 5,703,515
307 5,703,516
312 5,703,517
354 5,703,518
387 5,703,519
439 5,703,520
512 5,703,521
534 5,703,522
553 5,703,523
560 5,703,524

CLASS 329
300 5,703,525
304 5,703,526
336 5,703,527

CLASS 330
51 5,703,528
5,703,529
149 5,703,530
5,703,531
253 5,703,532
5,703,533
277 5,703,534
278 5,703,535
289 5,703,536

CLASS 331
1 A 5,703,537
4 5,703,538
16 5,703,539
5,703,540
57 5,703,541
70 5,703,542
116 FE 5,703,543

CLASS 333
185 5,703,544
202 5,703,545
204 5,703,546
209 5,703,547
235 5,703,548

CLASS 335
78 5,703,549
5,703,550
126 5,703,551
205 5,703,552
215 5,703,553
229 5,703,554
272 5,703,555

CLASS 336
83 5,703,556
92 5,703,557
192 5,703,558
234 5,703,559

CLASS 337
348 5,703,560

CLASS 338
53 5,703,561

CLASS 340
286.02 5,703,562
426 5,703,563
539 5,703,564
572 5,703,565
5,703,566
573 5,703,567
602 5,703,568
605 5,703,569
825.44 5,703,570
5,703,571
5,703,572
825.54 5,703,573
870.07 5,703,574
870.17 5,703,575
870.31 5,703,576
908 5,703,577

CLASS 341
22 5,703,578
50 5,703,579
59 5,703,580
67 5,703,581
120 5,703,582
122 5,703,583
141 5,703,584
5,703,585
144 5,703,586
5,703,587
159 5,703,588
172 5,703,589

CLASS 342
13 5,703,590
30 5,703,591
93 5,703,592
96 5,703,593
123 5,703,594
175 5,703,595
194 5,703,596
357 5,703,597
5,703,598
368 5,703,599

CLASS 343
700 MS 5,703,600
5,703,601
702 5,703,602
753 5,703,603

CLASS 345
8 5,703,604
5,703,605
32 5,703,606
34 5,703,607
56 5,703,609
74 5,703,610
5,703,611
75 5,703,612
97 5,703,614
5,703,615
98 5,703,616
5,703,617
99 5,703,608
112 5,703,618
145 5,703,620
147 5,703,621
154 5,703,622
158 5,703,623
168 5,703,625
169 5,703,624
171 5,703,626
184 5,704,037
199 5,703,627
202 5,703,628
213 5,703,629

CLASS 347
43 5,703,630
47 5,703,631
5,703,632
86 5,703,633
176 5,703,635

CLASS 348
14 5,703,636
53 5,703,637
220 5,703,638
241 5,703,639
272 5,703,640
274 5,703,641
317 5,703,642
341 5,703,643
363 5,703,644
388 5,703,645
401 5,703,646
403 5,703,647
801 5,703,648
808 5,703,649
413 5,703,650
416 5,703,651
421 5,703,652
445 5,703,653
446 5,703,654
448 5,703,655
549 5,703,656
554 5,703,657
5,703,658
576 5,703,659
638 5,703,660
673 5,703,661
728 5,703,662

CLASS 349
5 5,703,663
58 5,703,664
60 5,703,665
61 5,703,666
65 5,703,667
110 5,703,668

CLASS 351
86 5,703,669
123 5,703,670

CLASS 353
25 5,702,169

CLASS 355
32 5,703,671
38 5,703,672
40 5,703,673
46 5,703,674
53 5,703,675
56 5,703,676

CLASS 356
4.04 5,703,677
5.05 5,703,678
28.5 5,703,679
35.5 5,703,680
36 5,703,681
73.1 5,703,682
301 5,703,683
357 5,703,684
401 5,703,685
418 5,703,686
426 5,703,687
430 5,703,688
432 5,703,689
436 5,703,690
437 5,703,691
445 5,703,692

CLASS 358
296 5,703,693
5,703,694
298 5,703,695
404 5,703,696
433 5,703,697
435 5,703,698
442 5,703,699
487 5,703,700
5,703,701

CLASS 359
1 5,703,702
5,703,703
9 5,703,704
22 5,703,705
125 5,703,706
128 5,703,707
140 5,703,708
196 5,703,709
283 5,703,710
341 5,703,711
350 5,703,712
357 5,703,713
368 5,703,714
392 5,703,715
431 5,703,716
462 5,703,717
494 5,703,718
547 5,703,719
591 5,703,720
619 Re.35,704
646 5,703,721
653 5,703,722
654 5,703,723
660 5,703,724
683 5,703,725
753 5,703,726
802 5,703,727
821 5,703,729
824 5,703,730
841 5,703,731
5,703,732
871 5,703,728

CLASS 360
77.01 5,703,733
97.02 5,703,734
105 5,703,735
109 5,703,737
113 5,703,738
121 5,703,739
126 5,703,740
132 5,703,741
5,703,742

CLASS 361
6 5,703,743
59 5,703,744
89 5,703,745
106 5,703,746
111 5,703,747
153 5,703,748
170 5,703,749
187 5,703,750
625 5,703,751
704 5,703,752
715 5,703,753
736 5,703,754
737 5,703,755
752 5,703,757
5,703,758
777 5,703,759
785 5,703,760
800 5,703,761
816 5,703,762

CLASS 362
29 5,702,171
32 5,702,170
72 5,702,172
80 5,702,173
5,702,174
191 5,702,175
219 5,702,176
226 5,702,177
255 5,702,179
294 5,702,178
410 5,702,180

CLASS 363
20 5,703,763
31 5,703,764
5,703,765
35 5,703,766
40 5,703,767
50 5,703,769
81 5,703,770
98 5,703,768
134 5,703,771

CLASS 364
422 5,703,772
5,703,773
424.051 5,703,775
424.06 5,703,774
424.094 5,703,776
431.062 5,703,777
437 5,703,778
449.3 5,703,780
470.06 5,703,781
474.24 5,703,782
478.01 5,703,783
478.11 5,703,784
479.14 5,703,785
5,703,786
487 5,703,787
488 5,703,788
489 5,703,789
492 5,703,790
5,703,791
496 5,703,792
314 R 5,703,793
5,703,794
5,703,795
563 5,703,796
576 5,703,797
578 5,703,798
725 5,703,799
736 5,703,800
748.5 5,703,801
760 5,703,802

CLASS 365
49 5,703,803
145 5,703,804
173 5,703,805
181 5,703,806
185.03 5,703,807
185.25 5,703,809
185.27 5,703,808
189.05 5,703,810
5,703,811
5,703,812
5,703,813
189.09 5,703,814
194 5,703,815
200 5,703,816
5,703,817
201 5,703,818
203 5,703,819
204 5,703,820
211 5,703,822
222 5,703,823
225.7 5,703,824
229 5,703,825
230.03 5,703,828
230.05 5,703,826
230.06 5,703,827
233 5,703,829
5,703,830
5,703,831
5,703,832

CLASS 366
40 5,702,181
130 5,702,182
195 5,702,183

CLASS 367
46 5,703,833
99 5,703,834
124 5,703,835
165 5,703,836

CLASS 368
88 5,703,837
120 5,703,838

CLASS 369
13 5,703,839
5,703,840
5,703,841
32 5,703,842
34 5,703,843
36 5,703,844
44.26 5,703,846
44.28 5,703,847
44.29 5,703,848
5,703,849
44.41 5,703,845
47 5,703,850
5,703,851
48 5,703,852
5,703,853
50 5,703,854
54 5,703,855
5,703,856
58 5,703,858
77.2 5,703,857
84 5,703,859
102 5,703,860
110 5,703,861
112 5,703,862
5,703,863
5,703,864
116 5,703,865
192 5,703,866
275.3 5,703,867
286 5,703,868

CLASS 370
229 5,703,869
232 5,703,870
248 5,703,871
252 5,703,872
332 5,703,873
335 5,703,874
381 5,703,875
395 5,703,876
5,703,877
5,703,878
398 5,703,879
465 5,703,880
468 5,703,881
474 5,703,882
501 5,703,883

CLASS 371
5.1 5,703,409
22.3 5,703,884
27 5,703,885
37.1 5,703,886
42 5,703,887
51.1 5,703,888
55 5,703,889

CLASS 372
12 5,703,890
32 5,703,892
38 5,703,891
43 5,703,893
46 5,703,894
50 5,703,895
5,703,896
5,703,897
96 5,703,898
5,703,899
107 5,703,900

CLASS 373
109 5,703,901

CLASS 374
1 5,702,184
29 5,702,185

CLASS 375
112 5,703,938
200 5,703,902
232 5,703,903
5,703,904
5,703,905
240 5,703,907
278 5,703,908
295 5,703,909
316 5,703,906
322 5,703,910
341 5,703,911
354 5,703,912
5,703,913
355 5,703,914
371 5,703,915

CLASS 376
260 5,703,916
280 5,703,917
458 5,703,918

CLASS 377
16 5,703,919

CLASS 378
4 5,703,920
5,703,921
65 5,703,922
87 5,703,923
136 5,703,924
181 5,703,925
200 5,703,926
208 5,703,927

CLASS 379
21 5,703,928
5,703,929
57 5,703,930
58 5,703,931
5,703,932
5,703,933
61 5,703,934
88 5,703,935
5,703,936
5,703,937
113 5,703,939
201 5,703,940
5,703,941
207 5,703,942
265 5,703,943
399 5,703,944
419 5,703,947
428 5,703,945
446 5,703,946

CLASS 380
21 5,703,948
5,703,949
23 5,703,950
25 5,703,951
44 5,703,952

CLASS 381
12 5,703,953
15 5,703,954
18 5,703,955
83 5,703,956
92 5,703,957

CLASS 382
124 5,703,958
133 5,703,959
141 5,703,960
154 5,703,961
173 5,703,962
197 5,703,963
228 5,703,964
232 5,703,965
236 5,703,966
239 5,703,967
269 5,703,968
276 5,703,969
278 5,703,970
282 5,703,971
310 5,703,972

CLASS 384
117 5,702,186
551 5,702,187

CLASS 385
14 5,703,973
5,703,974
16 5,703,975
28 5,703,976
5,703,977
37 5,703,978
43 5,703,979
49 5,703,980
78 5,703,981
5,703,982
104 5,703,983
106 5,703,984
117 5,703,985
123 5,703,986
126 5,703,987
128 5,703,988
130 5,703,989
135 5,703,990
5,703,991
139 5,703,992

CLASS 386
35 5,703,993
52 5,703,994
5,703,995
68 5,703,996
97 5,703,997

CLASS 392
340 5,703,998

CLASS 395
2.12 5,703,999
2.16 5,704,000
2.28 5,704,001
2.29 5,704,002
5,704,003
2.52 5,704,004
2.63 5,704,005
2.68 5,704,006
2.69 5,704,007
2.82 5,704,008
2.84 5,704,009
3 5,704,010
22 5,704,011
5,704,012
23 5,704,013
24 5,704,014
25 5,704,015
27 5,704,016
61 5,704,017
75 5,704,018
101 5,704,019
102 5,704,020
109 5,704,021
114 5,704,023
115 5,704,022
128 5,704,024
131 5,704,025
5,704,026
133 5,704,027
140 5,704,028
149 5,704,029
182.02 5,704,031
5,704,032
182.1 5,704,030
183.06 5,704,033
183.14 5,704,034
183.18 5,704,035
183.19 5,704,036
185.08 5,704,038
186 5,704,039
188.01 5,704,040
200.15 5,704,041
200.34 5,704,042
200.65 5,704,047
204 5,704,044
235 5,704,045
239 5,704,046
306 5,704,048
328 5,704,049
339 5,704,050
357 5,704,051
380 5,704,052
388 5,704,054
402 5,704,055
445 5,704,056
481 5,704,057
485 5,704,058
515 5,704,059
800 5,704,060

CLASS 396
330 5,704,061

CLASS 400
120.05 5,702,188
328 5,702,189
341 5,702,190
582 5,702,191
613 5,702,192

CLASS 401
65 5,702,193
136 5,702,194
289 5,702,195

CLASS 403
46 5,702,196
16 5,702,197
377 5,702,198

CLASS 404
17 5,702,199
25 5,702,200
75 5,702,201
118 5,702,202

CLASS 405
38 5,702,203
119 5,702,204
168 5,702,205
227 5,702,206
258 5,702,207
5,702,208

CLASS 406
12 5,702,209

CLASS 407
110 5,702,210

CLASS 408
56 5,702,211
153 5,702,212

CLASS 409
218 5,702,213

CLASS 411
5 5,702,214
21 5,702,215
32 5,702,216
552 5,702,218
909 5,702,217

CLASS 412
6 5,702,219
8 5,702,220

CLASS 414
142.3 5,702,221
228 5,702,222
401 5,702,223
403 5,702,224
408 5,702,225
426 5,702,226
704 5,702,227
744.5 5,702,228

CLASS 415
55.4 5,702,229
119 5,702,230
5,702,231

CLASS 416
95 5,702,232
245 5,702,233

CLASS 417
53 5,702,234
222.2 5,702,235
269 5,702,236
313 5,702,237
380 5,702,238
512 5,702,239

CLASS 418
8 5,702,240
55.4 5,702,241
132 5,702,243
150 5,702,242

CLASS 420
57 5,702,668

CLASS 422
30 5,702,669
103 5,702,671
131 5,702,672
186.07 5,702,673

CLASS 423
50 5,702,674
213.5 5,702,675
261 5,702,676
308 5,702,677
567.1 5,702,678
599 5,702,679

CLASS 424
9.2 5,702,681
9.361 5,702,683
9.42 5,702,682
10.3 5,702,684
49 5,702,686
52 5,702,687
59 5,702,688
63 5,702,689
70.1 5,702,690
5,702,691
5,702,692
78.03 5,702,693
5,702,694
78.08 5,702,695
78.12 5,702,696
85.1 5,702,697
85.2 5,702,698
85.6 5,702,699
93.1 5,702,700
93.46 5,702,701
93.461 5,702,703
93.71 5,702,702
137.1 5,702,704
145.1 5,702,705
208.1 5,702,707
261.1 5,702,708
401 5,702,709
5,702,710
5,702,711
5,702,712
5,702,713
5,702,714
402 5,702,715
422 5,702,716
425 5,702,717
438 5,702,718
442 5,702,719
448 5,702,720
449 5,702,721
450 5,702,722
463 5,702,723
465 5,702,724
472 5,702,725
491 5,702,727
547 5,702,728
653 5,702,729

CLASS 425
72.2 5,702,730
125 5,702,731
130 Re.35,705
145 5,702,732
183 5,702,733
534 5,702,734
548 5,702,735
556 5,702,736

CLASS 426
33 5,702,737
36 5,702,738
87 5,702,739
5,702,740
92 5,702,741
115 5,702,742
129 5,702,743
242 5,702,744
5,702,745
248 5,702,746
422 5,702,747
478 5,702,748
615 5,702,750
629 5,702,751
634 5,702,752
638 5,702,749

CLASS 427
2.12 5,702,753
5,702,754
115 5,702,755
127 5,702,756
131 5,702,757
133 5,702,758
142 5,702,759
172 5,702,760
181 5,702,761
212 5,702,762
241 5,702,763
248.1 5,702,764
356 5,702,765
376.1 5,702,766
407.1 5,702,767
421 5,702,768
451 5,702,769
475 5,702,770
491 5,702,771
536 5,702,772
573 5,702,773
598 5,702,774

CLASS 428
1 5,702,775
5,702,776
5,702,777
5 5,702,778
14 5,702,779
15 5,702,780
18 5,702,781
31 5,702,782
34.8 5,702,783
34.9 5,702,784
35.2 5,702,785
35.7 5,702,786
36.4 5,702,787
40.1 5,702,789
46 5,702,790
53 5,702,791
54.1 5,702,792
64.3 5,702,793
65.3 5,702,794
66.6 5,702,795
95 5,702,796
100 5,702,797
131 5,702,798
143 5,702,799
144 5,702,800
181 5,702,801
192 5,702,802
195 5,702,803
5,702,804
5,702,805
206 5,702,806
210 5,702,807
216 5,702,808
5,702,809
318.8 5,702,810
323 5,702,811
5,702,812
332 5,702,813
364 5,702,814
5,702,815
375 5,702,816
409 5,702,818
412 5,702,819
413 5,702,820
425.9 5,702,821
446 5,702,822
500 5,702,824
5,702,825
515 5,702,826
519 5,702,827
540 5,702,828
610 5,702,829
611 5,702,830
5,702,831
5,702,832
662.02 5,701,899
690 5,702,833
692 5,702,834

CLASS 429
2 5,702,835
13 5,702,836
40 5,702,837
5,702,838
42 5,702,839
88 5,702,841
89 5,702,840
105 5,702,842
218 5,702,843
223 5,702,844
224 5,702,845

CLASS 430
2 5,702,846
5 5,702,847
5,702,848
5,702,849
19 5,702,850
30 5,702,851
37 5,702,852
39 5,702,854
83 5,702,855
96 5,702,856
101 5,702,857
106.6 5,702,858
110 5,702,859
137 5,702,860
191 5,702,861
5,702,862
200 5,702,863
264 5,702,864
5,702,865
5,702,866
291 5,702,867
312 5,702,868
313 5,702,869
314 5,702,870
5,702,871
326 5,702,872
373 5,702,873
5,702,874
492 5,702,875
496 5,702,876
551 5,702,877
567 5,702,878
569 5,702,879

CLASS 431
2 5,702,244

CLASS 432
14 5,702,245
95 5,702,246
103 5,702,247

CLASS 433
29 5,702,249
37 5,702,250
80 5,702,251
173 5,702,252
5,702,346

CLASS 434
236 5,702,253

CLASS 435
1.2 5,702,880
5,702,881
4 5,702,882
5,702,883
5 5,702,884
6 5,702,885
5,702,886
5,702,887
5,702,888
5,702,889
5,702,890
5,702,891
5,702,892
5,702,893
5,702,894
5,702,895
5,702,896
5,702,897
5,702,898
5,702,901
5,702,902
5,702,903
7.1 5,702,904
5,702,905
5,702,906
5,702,907
7.8 5,702,908
7.9 5,702,909
7.94 5,702,910
12 5,702,911
13 5,702,912
28 5,702,913
29 5,702,914
32 5,702,915
69.1 5,702,916
5,702,917
69.3 5,702,918
69.5 5,702,919
5,702,920
69.6 5,702,921
71.2 5,702,922
71.3 5,702,923
78 5,702,924
91.1 5,702,925
91.2 5,702,926
104 5,702,927
118 5,702,929
121 5,702,928
122 5,702,930
172.3 5,702,931
5,702,932
5,702,933
183 5,702,934
193 5,702,935
196 5,702,936
212 5,702,937
226 5,702,938
233 5,702,939
243 5,702,941
252.1 5,702,940
252.9 5,702,942
253.6 5,702,943
5,702,944
297.1 5,702,945
320.1 5,702,946
348 5,702,948
402 5,702,949

CLASS 436
49 5,702,950
62 5,702,951
67 5,702,952
69 5,702,953
103 5,702,954
135 5,702,955

CLASS 437
8 5,702,956
24 5,702,957
31 5,702,958
5,702,959
40 5,702,961
5,702,962
40 TFT 5,702,960
41 GS 5,702,963
43 5,702,964
5,702,966
45 5,702,967
52 5,702,968
5,702,969
5,702,970
53 5,702,971

56 5,702,972
57 5,702,973
60 5,702,974
61 5,702,975
65 5,702,978
67 5,702,976
5,702,977
187 5,702,979
5,702,980
192 5,702,981
195 5,702,982
5,702,983
208 5,702,984
217 5,702,985

CLASS 438
163 5,702,986
187 5,702,987
238 5,702,988
397 5,702,989
618 5,702,990

CLASS 439
57 5,702,254
71 5,702,255
5,702,256
79 5,702,257
5,702,258
137 5,702,259
164 5,702,260
188 5,702,261
5,702,262
321 5,702,263
346 5,702,264
352 5,702,265
357 5,702,266
419 5,702,267
5,702,268
496 5,702,269
528 5,702,270
676 5,702,271
843 5,702,272

CLASS 440
6 5,702,273
21 5,702,274
61 5,702,275
89 5,702,276

CLASS 441
64 5,702,277
66 5,702,278
108 5,702,279

CLASS 442
72 5,702,991
123 5,702,992
204 5,702,993
229 5,702,994

CLASS 445
23 5,702,280
50 5,702,281

CLASS 446
267 5,702,282
397 5,702,283
475 5,702,284

CLASS 450
1 5,702,285
155 5,702,286

CLASS 451
28 5,702,287
36 5,702,288
38 5,702,289
41 5,702,290
5,702,291
5,702,292
364 5,702,293
541 5,702,294

CLASS 452
180 5,702,295

CLASS 454
200 5,702,296
213 5,702,297
322 5,702,298
342 5,702,299

CLASS 458
450 5,702,823

CLASS 460
106 5,702,300
144 5,702,301

CLASS 463
20 5,702,302
27 5,702,303
29 5,702,304
42 5,702,305

CLASS 464
172 5,702,306

CLASS 472
47 5,702,307

CLASS 473
70 5,702,308
218 5,702,309
308 5,702,310
373 5,702,311
377 5,702,312
546 5,702,313

CLASS 474
94 5,702,314
5,702,315
96 5,702,316
110 5,702,317
111 5,702,318

CLASS 475
88 5,702,319
159 5,702,320
199 5,702,321

CLASS 477
120 5,702,322

CLASS 482
8 5,702,323
46 5,702,324
54 5,702,325
68 5,702,326
83 5,702,327
96 5,702,328
97 5,702,329
105 5,702,330
111 5,702,331
130 5,702,332
131 5,702,333
140 5,702,334

CLASS 483
1 5,702,335
56 5,702,336

CLASS 492
7 5,702,337
30 5,702,338

CLASS 493
196 5,702,339
220 5,702,340
426 5,702,341

CLASS 501
10 5,702,995
14 5,702,996
88 5,702,997
97 5,702,998
152 5,702,999
5,703,000

CLASS 502
347 5,703,001
350 5,703,002
400 5,703,003

CLASS 503
201 5,703,005
207 5,703,006

CLASS 504
106 5,703,008
116 5,703,009
5,703,010
130 5,703,011
5,703,012
131 5,703,013
142 5,703,014
206 5,703,015
5,703,016
227 5,703,017
320 5,703,019

CLASS 505
210 5,703,020
501 5,703,021

CLASS 508
345 5,703,022
468 5,703,023

CLASS 510
100 5,703,024
147 5,703,025
152 5,703,026
232 5,703,027
236 5,703,028
237 5,703,033
242 5,703,029
311 5,703,030
312 5,703,031
320 5,703,032
376 5,703,034
423 5,703,035
427 5,703,036
444 5,703,037

CLASS 514
2 5,703,038
5,703,039
5,703,040
5,703,041
8 Re.35,706
12 5,703,043
5,703,044
5,703,045
5,703,046
5,703,047
5,703,048
5,703,049
18 5,703,050
21 5,703,051
26 5,703,052
27 5,703,053
44 5,703,054
5,703,055
5,703,056
5,703,057
45 5,703,058
53 5,703,059
54 5,703,060
77 5,703,062
78 5,703,063
80 5,703,064
173 5,703,066
179 5,703,067
183 5,703,065
195 5,703,068
211 5,703,069
5,703,072
212 5,703,070
218 5,703,071
226.5 5,703,073
231.5 5,703,074
233.5 5,703,075
237.5 5,703,076
249 5,703,077
250 5,703,078
252 5,703,079
253 5,703,080
254 5,703,081
255 5,703,082
5,703,083
261 5,703,084
263 5,703,085
275 5,703,086
278 5,703,087
5,703,088
284 5,703,089
290 5,703,090
300 5,703,091
303 5,703,092
312 5,703,093
5,703,094
326 5,703,096
332 5,703,095
338 5,703,097
339 5,703,098
340 5,703,099
343 5,703,100
5,703,101
362 5,703,102
365 5,703,103
369 5,703,104
372 5,703,105
378 5,703,106
381 5,703,107
382 5,703,108
383 5,703,109
396 5,703,110
410 5,703,111
411 5,703,112
422 5,703,113
441 5,703,114
443 5,703,116
449 5,703,117
456 5,703,115
5,703,118
459 5,703,119
469 5,703,121
474 5,703,122
512 5,703,123
514 5,703,124
539 5,703,125
562 5,703,126
5,703,127
563 5,703,128
613 5,703,129
616 5,703,130
642 5,703,131
643 5,703,132

CLASS 518
707 5,703,133

CLASS 521
48 5,703,134
60 5,703,135
128 5,703,136

CLASS 522
25 5,703,137
29 5,703,138
42 5,703,139
57 5,703,140
90 5,703,142
97 5,703,141

CLASS 523
107 5,703,143
144 5,703,144
161 5,703,145
200 5,703,146
212 5,703,147

CLASS 524
62 5,703,148
116 5,703,149
125 5,703,150
161 5,703,151
435 5,703,152
497 5,703,153
525 5,703,154
558 5,703,155
802 5,703,156
822 5,703,157
840 5,703,158

CLASS 525
54.24 5,703,160
54.3 5,703,159
66 5,703,161
89 5,703,162
105 5,703,163
133 5,703,164
189 5,703,165
196 5,703,166
207 5,703,167
309 5,703,169
5,703,170
314 5,703,171
323 5,703,172
326.2 5,703,173
329.9 5,703,174
340 5,703,175
369 5,703,176
411 5,703,177
476 5,703,178

CLASS 526
59 5,703,179
119 5,703,180
140 5,703,181
185 5,703,182
189 5,703,183
220 5,703,184
247 5,703,185
272 5,703,186
282 5,703,187
290 5,703,188
333 5,703,189

CLASS 528
12 5,703,190
31 5,703,191
39 5,703,192
44 5,703,193
70 5,703,194
103 5,703,195
196 5,703,196
201 5,703,197
303 5,703,198
329.1 5,703,199
354 5,703,200
392 5,703,201
481 5,703,202
483 5,703,203
486 5,703,204

CLASS 530
324 5,703,205
5,703,206
5,703,207
331 5,703,208
350 5,703,209
356 5,703,211
360 5,703,212
388.85 5,703,213

CLASS 534
642 5,703,215

CLASS 536
23.1 5,703,217
5,703,218
23.2 5,703,219
23.5 5,703,220
23.72 5,703,221
24.3 5,703,222
25.33 5,703,223
29.2 5,703,224
59 5,703,225
107 5,703,226
127 5,703,228

CLASS 540
140 5,703,229
145 5,703,230
200 5,703,231
557 5,703,232

CLASS 544
32 5,703,233
50 5,703,234
363 5,703,235
366 5,703,236
380 5,703,237

CLASS 546
119 5,703,238
205 5,703,239
210 5,703,240

CLASS 548
314.7 5,703,241
473 5,703,242
5,703,245
541 5,703,243
557 5,703,244
955 5,703,246
962 5,703,247

CLASS 549
62 5,703,248
337 5,703,249
369 5,703,250
410 5,703,251
413 5,703,252
536 5,703,253
5,703,254

CLASS 554
83 5,703,255
224 5,703,256

CLASS 556
7 5,703,257
89 5,703,259
404 5,703,258

CLASS 558
8 5,703,260
18 5,703,261
113 5,703,262
170 5,703,263
316 5,703,264
390 5,703,265
408 5,703,266
451 5,703,267
466 5,703,268

CLASS 560
19 5,703,269
183 5,703,270
190 5,703,271
231 5,703,272

CLASS 562
16 5,703,273
475 5,703,274

CLASS 600
25 5,702,342
37 5,702,343
104 5,702,344
109 5,702,345
121 5,702,347
124 5,702,348
131 5,702,349
160 5,702,350
190 5,702,351
201 5,702,352

CLASS 601
2 5,702,353
27 5,702,354

CLASS 602
21 5,702,355
41 5,702,356

CLASS 604
4 5,702,357
5,702,358
20 5,702,359
22 5,702,360
53 5,702,361
58 5,702,362
93 5,702,363
96 5,702,364
5,702,439
105 5,702,365
110 5,702,366
5,702,367
171 5,702,368
180 5,702,371
192 5,702,369
256 5,702,370
264 5,702,372
282 5,702,373
283 5,702,374
288 5,702,375
361 5,702,376
5,702,377
373 5,702,378
385.1 5,702,379
5,702,380
5,702,381
385.2 5,702,382
409 5,702,383
892.1 5,702,384

CLASS 606
34 5,702,386
45 5,702,387
48 5,702,390
54 5,702,388
5,702,389
61 5,702,391
5,702,392
5,702,393
5,702,394
5,702,395
69 5,702,396
72 5,702,397
5,702,398
5,702,399
102 5,702,401
107 5,702,400
5,702,402
122 5,702,404
130 5,702,405
5,702,406
135 5,702,403
139 5,702,407
5,702,408
151 5,702,409
157 5,702,411
159 5,702,412
5,702,413
166 5,702,414
170 5,702,415
193 5,702,416
194 5,702,410
5,702,417
198 5,702,418
5,702,419
205 5,702,420
213 5,702,421
232 5,702,422

CLASS 607
1 5,702,430
2 5,702,423
8 5,702,424
5,702,425
27 5,702,426
28 5,702,427
41 5,702,428
46 5,702,429
61 5,702,431
88 5,702,432
101 5,702,433
104 5,702,435
116 5,702,437
122 5,702,436

CLASS 623
3 Re.35,707
5 5,702,440
6 5,702,441
11 5,702,443
5,702,444
5,702,445
16 5,702,446
5,702,447
5,702,448
17 5,702,449
5,702,450
5,702,451
5,702,452
5,702,453
5,702,454
5,702,455
18 5,702,456
19 5,702,457
20 5,702,458
5,702,459
5,702,460
5,702,461
5,702,462

CLASSIFICATION OF PATENTS

Class	Patent
	5,702,463
	5,702,464
	5,702,465
	5,702,466
	5,702,467
21	5,702,468
	5,702,469
	5,702,470
	5,702,471
	5,702,472
22	5,702,473
	5,702,474
	5,702,475
	5,702,476
	5,702,477
23	5,702,478
	5,702,479
	5,702,480
	5,702,481
	5,702,482
	5,702,483
	5,702,484
	5,702,485
	5,702,486
	5,702,487
27	5,702,488
34	5,702,489

CLASSIFICATION OF DESIGNS

Class	Subclass	Patent
D1—	115	388,235
	130	388,236
D2—	608	388,237
	609	388,238
	870	388,239
	884	388,240
	953	388,350
	954	388,314
	959	388,241
	960	388,355
	961	388,242
	963	388,243
	972	388,244
		388,364
		388,402
		388,499
	993	388,245
D3—	204	388,246
	213	388,247
	217	388,248
	218	388,249
	248	388,250
	291	388,251
D4—	101	388,252
	104	388,253
	107	388,254
D5—	26	388,255
D6—	358	388,256
	361	388,257
	366	388,258
	381	388,259
		388,260
		388,261
	419	388,262
		388,263
	439	388,264
	445	388,265
	468	388,266
	479	388,267
	495	388,268
	501	388,269
		388,270
	546	388,271
	549	388,272
	608	388,273
D7—	317	388,274
	319	388,275
	330	388,276
	332	388,277
	388	388,278
	391	388,279
	416	388,280
	515	388,281
	605	388,282
	622	388,283
	645	388,284
	646	388,285
	653	388,286
	870	388,287
	673	388,288
	692	388,289
D8—	1	388,290
	8	388,291
	10	388,292
		388,293
	22	388,294
		388,295
	28	388,296
	29.1	388,297
		388,298
	45	388,299
	61	388,300
	68	388,301
		388,302
	81	388,303
	93	388,304
	98	388,305
	104	388,306
	107	388,307
	130	388,308
		388,309
	332	388,310
	353	388,311
	354	388,312
		388,313
	360.1	388,315
	387	388,316
	403	388,317
	499	388,318
D9—	300	388,319
		388,320
	332	388,321
	415	388,322
	418	388,323
	424	388,324
	425	388,325
	434	388,326
	436	388,327
	447	388,328
	503	388,329
	543	388,330
	571	388,331
D10—	32	388,332
		388,333
		388,334
		388,335
		388,336
	33	388,337
	39	388,338
		388,339
	43	388,340
	46.1	388,341
		388,342
	57	388,343
	69	388,344
	71	388,345
	79	388,346
	92	388,347
	98	388,348
	104	388,349
	106	388,351
		388,352
	113	388,353
D11—	21	388,354
	86	388,356
	88	388,357
	125	388,358
		388,359
		388,360
	131	388,361
	155	388,362
	164	388,363
D12—	92	388,365
	110	388,366
	129	388,367
		388,368
	146	388,369
		388,370
		388,371
		388,372
	147	388,373
		388,374
		388,375
		388,376
		388,377
		388,378
		388,379
		388,380
		388,381
	162	388,382
		388,383
		388,384
	167	388,385
	169	388,386
	182	388,387
	190	388,388
	205	388,389
	209	388,390
	323	388,391
	333	388,392
	400	388,393
	407	388,394
D13—	134	388,395
	146	388,396
	168	388,397
	174	388,398
	179	388,399
	199	388,400
D14—	106	388,401
		388,403
	107	388,404
		388,405
	109	388,406
	113	388,407
		388,408
		388,409
		388,410
		388,411
		388,412
		388,413
	114	388,414
		388,415
		388,416
	114.4	388,417
		388,418
		388,419
		388,420
	114.7	388,421
		388,422
		388,423
	114.9	388,424
		388,425
	124	388,426
	135	388,427
	138	388,428
		388,429
		388,430
		388,431
	149	388,432
		388,433
		388,434
	163	388,435
	205	388,436
	223	388,437
	258	388,438
D15—	7	388,439
	13	388,440
	133	388,441
		388,442
		388,443
	139	388,444
	140	388,445
		388,446
	147	388,447
D16—	135	388,448
	202	388,449
	203	388,450
	215	388,451
	315	388,453
	335	388,454
	339	388,452
D18—	2	388,456
	55	388,455
D19—	26	388,457
	36	388,458
	52	388,459
	59	388,460
	64	388,461
	65	388,462
	78	388,464
	88	388,463
	90	388,465
D20—	1	388,466
	43	388,467
		388,468
D21—	13	388,469
		388,470
	34	388,471
	64	388,472
	71	388,473
	87	388,474
	108	388,475
	148	388,476
		388,477
		388,478
	164	388,479
	166	388,480
	196	388,481
	208	388,482
	214	388,483
	219	388,484
		388,485
		388,487
	220	388,486
	221	388,488
	237	388,489
		388,490
		388,491
		388,492
	238	388,493
	254	388,494
D22—	126	388,495
		388,496
	141	388,497
	144	388,498
D23—	209	388,500
	213	388,501
	214	388,502
	231	388,503
	233	388,504
	238	388,505
	252	388,506
	284	388,507
	328	388,508
	332	388,509
	355	388,510
	358	388,511
	374	388,512
	411	388,513
D24—	105	388,514
	138	388,515
	143	388,516
	190	388,517
	214	388,518
	223	388,519
D25—	64	388,520
	124	388,521
D26—	9	388,522
	28	388,523
	43	388,524
	63	388,525
	94	388,527
	106	388,528
	134	388,526
	135	388,529
	139	388,530
D27—	137	388,531
	195	388,532
D28—	4	388,533
		388,534
	7	388,535
	9	388,536
	10	388,537
	18	388,538
	25	388,539
	45	388,540
	46	388,541
	49	388,542
	53	388,543
	56	388,544
	57	388,545
	63	388,546
		388,547
	64	388,548
	82	388,549
D29—	101	388,550
	102	388,551
	112	388,552
	119	388,553
	120	388,554
D30—	108	388,555
	121	388,556
	142	388,557
	153	388,558
	160	388,559
	162	388,560
D32—	15	388,561
	17	388,562
	18	388,563
	21	388,564
	23	388,565
	25	388,566
		388,567
	31	388,568
		388,569
	42	388,570
		388,571
	46	388,572
	69	388,573
	70	388,574
	71	388,575
	73	388,576
D34—	5	388,577
	6	388,578
	11	388,579
	19	388,580
	27	388,581
	28	388,582
	29	388,583
D99—	35	388,584

CLASSIFICATION OF PLANTS

Class	Subclass	Patent
P.—	9	0,164
	39	0,165
	53.2	0,166
	54.1	0,167
	69.1	0,168
		0,169
	69.2	0,170
	87.6	0,171

GEOGRAPHICAL INDEX
OF RESIDENCE OF INVENTORS

(U.S. States, Territories and Armed Forces, the Commonwealth of Puerto Rico, and the Canal Zone)

Alabama	1	Kentucky	21	Oregon	41
Alaska	2	Louisiana	22	Pennsylvania	42
American Samoa	3	Maine	23	Puerto Rico	43
Arizona	4	Maryland	24	Rhode Island	44
Arkansas	5	Massachusetts	25	South Carolina	45
California	6	Michigan	26	South Dakota	46
Canal Zone	7	Minnesota	27	Tennessee	47
Colorado	8	Mississippi	28	Texas	48
Connecticut	9	Missouri	29	Utah	49
Delaware	10	Montana	30	Vermont	50
District of Columbia	11	Nebraska	31	Virginia	51
Florida	12	Nevada	32	Virgin Islands	52
Georgia	13	New Hampshire	33	Washington	53
Guam	14	New Jersey	34	West Virginia	54
Hawaii	15	New Mexico	35	Wisconsin	55
Idaho	16	New York	36	Wyoming	56
Illinois	17	North Carolina	37	U.S. Air Force	57
Indiana	18	North Dakota	38	U.S. Army	58
Iowa	19	Ohio	39	U.S. Navy	59
Kansas	20	Oklahoma	40		

(First number in listing denotes location according to above key. Refer to patent number in body of the Official Gazette to obtain details as to inventor name, location, etc.)

PATENTS

01 :	5,701,722	5,701,706	5,702,225	5,702,607	5,703,100	5,703,599
	5,703,255	5,701,748	5,702,249	5,702,629	5,703,101	5,703,602
	5,703,843	5,701,770	5,702,251	5,702,649	5,703,116	5,703,618
02 :	5,701,957	5,701,772	5,702,256	5,702,653	5,703,163	5,703,621
04 :	5,701,645	5,701,801	5,702,262	5,702,654	5,703,194	5,703,627
	5,701,855	5,701,866	5,702,263	5,702,662	5,703,208	5,703,639
	5,701,875	5,701,887	5,702,266	5,702,668	5,703,218	5,703,656
	5,702,172	5,701,889	5,702,270	5,702,697	5,703,221	5,703,689
	5,702,247	5,701,893	5,702,277	5,702,699	5,703,222	5,703,691
	5,702,253	5,701,894	5,702,284	5,702,701	5,703,258	5,703,695
	5,702,305	5,701,900	5,702,290	5,702,703	5,703,259	5,703,697
	5,702,331	5,701,901	5,702,301	5,702,705	5,703,277	5,703,708
	5,702,767	5,701,902	5,702,307	5,702,725	5,703,296	5,703,710
	5,702,775	5,701,905	5,702,330	5,702,727	5,703,313	5,703,713
	5,702,831	5,701,906	5,702,336	5,702,745	5,703,314	5,703,722
	5,703,316	5,701,909	5,702,358	5,702,746	5,703,335	5,703,727
	5,703,354	5,701,910	5,702,359	5,702,756	5,703,344	5,703,734
	5,703,388	5,701,911	5,702,361	5,702,761	5,703,353	5,703,740
	5,703,394	5,701,914	5,702,367	5,702,778	5,703,356	5,703,741
	5,703,416	5,701,919	5,702,368	5,702,787	5,703,358	5,703,751
	5,703,463	5,701,920	5,702,371	5,702,801	5,703,360	5,703,755
	5,703,478	5,701,923	5,702,373	5,702,805	5,703,363	5,703,759
	5,703,482	5,701,927	5,702,386	5,702,848	5,703,371	5,703,760
	5,703,490	5,701,931	5,702,391	5,702,889	5,703,376	5,703,766
	5,703,493	5,701,934	5,702,402	5,702,891	5,703,378	5,703,771
	5,703,496	5,701,968	5,702,412	5,702,893	5,703,382	5,703,784
	5,703,504	5,701,981	5,702,416	5,702,897	5,703,402	5,703,785
	5,703,506	5,702,005	5,702,417	5,702,906	5,703,411	5,703,788
	5,703,589	5,702,006	5,702,422	5,702,914	5,703,418	5,703,789
	5,703,595	5,702,018	5,702,428	5,702,927	5,703,442	5,703,790
	5,703,598	5,702,026	5,702,440	5,702,931	5,703,462	5,703,792
	5,703,664	5,702,027	5,702,441	5,702,934	5,703,464	5,703,795
	5,703,805	5,702,039	5,702,444	5,702,938	5,703,481	5,703,803
	5,703,808	5,702,049	5,702,452	5,702,957	5,703,485	5,703,806
	5,703,879	5,702,058	5,702,466	5,702,978	5,703,497	5,703,818
	5,703,893	5,702,065	5,702,470	5,702,991	5,703,502	5,703,827
	5,703,903	5,702,077	5,702,481	5,703,011	5,703,514	5,703,847
	5,704,034	5,702,082	5,702,483	5,703,012	5,703,524	5,703,865
05 :	5,701,694	5,702,086	5,702,492	5,703,013	5,703,529	5,703,871
	5,702,652	5,702,105	5,702,503	5,703,014	5,703,531	5,703,875
	5,703,178	5,702,106	5,702,530	5,703,019	5,703,537	5,703,876
06 :	5,701,607	5,702,126	5,702,532	5,703,020	5,703,538	5,703,877
	5,701,608	5,702,138	5,702,533	5,703,024	5,703,540	5,703,891
	5,701,620	5,702,151	5,702,537	5,703,038	5,703,563	5,703,897
	5,701,621	5,702,161	5,702,559	5,703,048	5,703,587	5,703,902
	5,701,638	5,702,170	5,702,563	5,703,051	5,703,590	5,703,929
	5,701,653	5,702,196	5,702,564	5,703,054	5,703,591	5,703,951
	5,701,670	5,702,213	5,702,573	5,703,055	5,703,594	5,703,961
	5,701,687	5,702,214	5,702,593	5,703,077	5,703,596	5,703,965

DESIGN PATENTS

01 : 388,342
04 : 388,404
05 : 388,285
06 : 388,236
388,237
388,238
388,243
388,244
388,246
388,248
388,250
388,256
388,263
388,289
388,299
388,306
388,333
388,337
388,339
388,340
388,341
388,343
388,349
388,353
388,367
388,368
388,383
388,386
388,387
388,390
388,393
388,397
388,410
388,411
388,412
388,415
388,417
388,418
388,419
388,420
388,421
388,422
388,423
388,425
388,426
388,452
388,454
388,458
388,459
388,462
388,472
388,481
388,484
388,485
388,488
388,503
388,505
388,513
388,518
388,535
388,539
388,540
388,541
388,548
388,553
388,566
388,567
388,577
388,578
388,579
388,580
09 : 388,351
388,352
388,525
388,560
388,575
10 : 388,304
12 : 388,267
388,287
388,365
388,438
388,502
388,520
388,531
388,559
13 : 388,392
388,556
16 : 388,283
17 : 388,240
388,280
388,311
388,325
388,363
388,376
388,377
388,399
388,424
388,429
388,430
388,465
388,467
388,470
388,473
388,495
18 : 388,317
388,362
388,400
388,432
19 : 388,270
388,323
20 : 388,569
21 : 388,308
388,309
388,391
22 : 388,460
388,561
23 : 388,570
24 : 388,291
388,318
388,498
388,528
388,554
388,564
25 : 388,278
388,451
388,483
388,486
388,487
388,500
388,511
388,519
388,571
388,583
26 : 388,281
388,313
388,389
388,493
388,510
388,523
388,529
388,532
388,550
27 : 388,262
388,298
388,345
388,361
388,406
388,414
29 : 388,286
388,464
388,582
32 : 388,469
388,507
33 : 388,326
388,536
34 : 388,235
388,239
388,253
388,266
388,271
388,272
388,331
388,526
35 : 388,290
36 : 388,249
388,273
388,307
388,315
388,388
388,407
388,435
388,436
388,517
388,537

	[illegible]
	[illegible]
	[illegible]
37 :	388,265
	[illegible]
	388,514
	[illegible]
	[illegible]
39 :	[illegible]
	388,322
	388,329
	388,330
	[illegible]
	388,370
	388,372
	388,378
	[illegible]
	388,439
	[illegible]
	388,521
41 :	388,301
	388,314
	[illegible]
	388,355
	388,356
	388,364
	388,402
	[illegible]
	388,530
42 :	388,245
	388,292
	388,293
	388,316
	388,328
	388,440
	388,475
	388,527
	388,547
44 :	388,357
45 :	388,522
47 :	388,242
48 :	388,277
	[illegible]
	388,312
	388,382
	388,384
	388,463
	388,482
	388,552
49 :	388,416
	388,557
	388,573
50 :	388,515
51 :	388,251
	388,276
	388,385
	388,457
53 :	388,327
	388,545
54 :	388,555
55 :	388,264
	388,305
	388,394
	[illegible]
	[illegible]
	388,512
	388,544

PLANT PATENTS

06 :	0,165
	0,171
39 :	0,168
	0,169
	0,170
47 :	0,166

U.S. GOVERNMENT PRINTING OFFICE : 1997 O - 179-255 : QL 3

CHANGE OF ADDRESS FORM

NAME- FIRST, LAST

COMPANY NAME OR ADDITIONAL ADDRESS LINE

STREET ADDRESS

CITY | STATE | ZIP CODE

PLEASE PRINT OR TYPE

Intl COUNTRY

Mail this form to: NEW ADDRESS

Superintendent of Documents
Government Printing Office SSOM
Washington, D.C. 20402

Attach last subscription label here.

Superintendent of Documents **Subscription** Order Form

Order Processing Code:
*** 5606**

❑ **YES,** enter _____ subscription(s) to **Official Gazette of the U.S. Patent and Trademark Office: Patents** (OG) for $549 per year ($686.25 foreign).

The total cost of my order is $_____. Price includes regular shipping and handling and is subject to change. International customers please add 25%.

____
Company or personal name (Please type or print)

____
Additional address/attention line

____
Street address

____
City, State, Zip code

____
Daytime phone including area code

____
Purchase order number (optional)

For privacy protection, check the box below:
❑ Do not make my name available to other mailers

Check method of payment:
❑ Check payable to Superintendent of Documents
❑ GPO Deposit Account ☐☐☐☐☐☐☐ – ☐
❑ VISA ❑ MasterCard

☐☐☐☐☐☐☐☐☐☐☐☐☐☐☐☐☐☐☐☐

☐☐☐☐ (expiration date)

____
Authorizing signature 4/95

Mail To: Superintendent of Documents
P.O. Box 371954, Pittsburgh, PA 15250–7954

Important: Please be sure to include this completed order form with your remittance.

Charge your order. It's easy!

VISA

Fax your orders (202) 512–2250

Phone your orders (202) 512–1800

Thank you for your order!

Superintendent of Documents **Subscription** Order Form

Order Processing Code:
*** 5606**

❑ **YES,** enter _____ subscription(s) to **Official Gazette of the U.S. Patent and Trademark Office: Patents** (OG) for $549 per year ($686.25 foreign).

The total cost of my order is $______. Price includes regular shipping and handling and is subject to change. International customers please add 25%.

____
Company or personal name (Please type or print)

____
Additional address/attention line

____
Street address

____
City, State, Zip code

____
Daytime phone including area code

____
Purchase order number (optional)

For privacy protection, check the box below:
❑ Do not make my name available to other mailers

Check method of payment:
❑ Check payable to Superintendent of Documents
❑ GPO Deposit Account ☐☐☐☐☐☐☐ – ☐
❑ VISA ❑ MasterCard
☐☐☐☐☐☐☐☐☐☐☐☐☐☐☐☐☐☐☐☐
☐☐☐☐ (expiration date)

____
Authorizing signature 4/95

Mail To: Superintendent of Documents
P.O. Box 371954, Pittsburgh, PA 15250–7954

Important: Please be sure to include this completed order form with your remittance.

Charge your order. It's easy!

Fax your orders (202) 512–2250

Phone your orders (202) 512–1800

Thank you for your order!

Superintendent of Documents **Subscription** Order Form

Order Processing Code:
*** 5606**

☐ **YES,** enter _____ subscription(s) to **Official Gazette of the U.S. Patent and Trademark Office: Patents** (OG) for $549 per year ($686.25 foreign).

The total cost of my order is $_____. Price includes regular shipping and handling and is subject to change. International customers please add 25%.

____
Company or personal name (Please type or print)

____
Additional address/attention line

____
Street address

____
City, State, Zip code

____
Daytime phone including area code

____
Purchase order number (optional)

For privacy protection, check the box below:
☐ Do not make my name available to other mailers

Check method of payment:
☐ Check payable to Superintendent of Documents
☐ GPO Deposit Account ☐☐☐☐☐☐☐ – ☐
☐ VISA ☐ MasterCard
☐☐☐☐☐☐☐☐☐☐☐☐☐☐☐☐☐☐☐☐
☐☐☐☐ (expiration date)

____
Authorizing signature 4/95

Mail To: Superintendent of Documents
P.O. Box 371954, Pittsburgh, PA 15250–7954

Important: Please be sure to include this completed order form with your remittance.

Charge your order. It's easy!

VISA

Fax your orders (202) 512–2250

Phone your orders (202) 512–1800

Thank you for your order!

END